AIR QUALITY PROGRAM
301 39th Street, Bldg. #7
Pittsburgh, PA 15201-1811

Title V Operating Permit
& Federally Enforceable State Operating Permit

proposed

Issued To: United States Steel Corporation
Mon Valley Works
Clairton Plant

ACHD Permit #: 0052-OP22

Facility: Clairton Coke Works
400 State Street
Clairton, PA 15025-1855

Date of Issuance: mm/dd/yr

Expiration Date: mm/dd/yr

Renewal Date: mm/dd/yr

Issued By: _____
JoAnn Truchan, P.E.
Section Chief, Engineering.

Prepared By: _____
Hafeez Ajenifuja
Air Quality Engineer

TABLE OF CONTENTS

I. CONTACT INFORMATION 4

II. FACILITY DESCRIPTION 5

III. GENERAL CONDITIONS - Major Source 25

IV. SITE LEVEL TERMS AND CONDITIONS 36

V. EMISSION UNIT LEVEL TERMS AND CONDITIONS 54

A. Coke Oven Batteries Nos. 1, 2 and 3: P001, P002 and P003 54

B. Battery No. 1, 2 and 3 Pushing Emission Control (PEC) System: P050 69

C. Coke Oven Batteries Nos. 13, 14 and 15: P004, P005 & P006 85

D. Battery No. 13, 14 and 15 Pushing Emission Control (PEC) System: P052 100

E. Coke Oven Batteries Nos. 19 and 20: P010 and P011 116

F. Battery No. 19 and 20 Pushing Emission Control (PEC) System: P053 131

G. Coke Oven Battery B: P012 147

H. Battery No. B Pushing Emission Control (PEC) Baghouse: P054 161

I. Coke Oven Battery C: P046 176

J. Coke Oven Battery C Pushing Emissions Control (PEC) Baghouse: 192

K. Quench Towers No. 1 and B: P013 & P017 207

L. Quench Tower 5A: P051 213

M. Quench Tower 7A: P052 219

N. Alternate Quench Towers No. 5 and 7: P015 and P016 225

O. Quench Tower C: P047 230

P. Desulfurization Plant: P019 236

Q. Keystone Cooling Tower: P020 242

R. Coke By-Product Recovery Plant: P021 244

S. No. 1 and No. 2 Continuous Barge Unloaders: P022 and P023 271

T. Pedestal Crane Unloader: P024 273

U. Coal Transfer: P026 274

V. No. 1 Primary and Secondary Pulverizers and No. 2 Primary and Secondary Pulverizers: P027 & P028 and P029 & P030 275

W. Surge Bins and Bunkers: P031 277

X. Coke Transfer: P032 and P033 278

Y. No. 1 and No. 2 Coke Screening Stations: P034 and P035 279

Z. Boom Conveyor (coal pile destocking): P041 281

proposed

AA. Coal and Coke Recycle Screening: P042 282
BB. Peters Creek Coke Screening: P043 283
CC. No. 4 Coke Screening Station: P049 284
DD. Light Oil Barge Loading: P044a 287
EE. Light Oil Truck Loading: P044b 294
FF. Coal Tar Truck & Railcar Loading: P044d 296
GG. Boiler No. 1: B001 298
HH. Boiler No. 2: B002 302
II. Boilers R1 and R2: B005 and B006 306
JJ. Boilers T1 and T2: B007 and B008 309
KK. Ammonia Flare: B010 312
LL. Abrasive Blasting: G001 315
MM. Cold Cleaning Machines 316
NN. Coal Storage Piles: E001 317
OO. Coke Storage Pile- Peters Creek: E002 318
PP. Coke Storage Pile- South Yard: E003 319
QQ. Roadways & Vehiclar Traffic: F001 320
VI. MISCELLANEOUS 322
A. Sources of Minor Significance 322
VII. ALTERNATIVE OPERATING SCENARIOS 323
VIII. EMISSIONS LIMITATIONS SUMMARY 324

AMENDMENTS:

DATE	*SECTION(S)*

proposed

I. CONTACT INFORMATION

Facility Location: United States Steel Corporation
Mon Valley Works, Clairton Plant
400 State Street
Clairton, PA 15025-1855

Permittee/Owner: United States Steel Corporation
Mon Valley Works, Clairton Plant
400 State Street
Clairton, PA 15025-1855

Permittee/Operator: Same as above

Responsible Official: Kurt Barshick
Title: General Manager
Company: United States Steel Corporation
Mon Valley Works
Address: 400 State Street
Clairton, PA 15025-1855
Telephone Number: (412) 675-2600
Fax Number: (412) 675-5407

Facility Contact: Mike Dzurinko
Title: Senior Manager Environmental
Telephone Number: (412) 233-1467
Fax Number: (412) 233-1011
E-mail Address: MDzurinko@uss.com

AGENCY ADDRESSES:

ACHD Engineer: **Hafeez A. Ajenifuja**
Title: Air Quality Engineer
Telephone Number: 412-578-8134
Fax Number: 412-578-8144
E-mail Address: hafeez.ajenifuja@alleghenycounty.us

ACHD Contact: **Chief Engineer**
Allegheny County Health Department
301 39th Street, Building #7
Pittsburgh, PA 15201-1891
AQPermits@alleghenycounty.us

EPA Contact: **Enforcement Programs Section (3AP12)**
USEPA Region III
1650 Arch Street
Philadelphia, PA 19103-2029

proposed

II. FACILITY DESCRIPTION

U. S. Steel Mon Valley Works Clairton Plant is the largest by-products coke plant in North America. The Clairton Plant operates 10 coke batteries and produces approximately 13,000 tons of coke per day from the destructive distillation (carbonization) of more than 18,000 tons of coal. During the carbonization process, approximately 225 million cubic feet of coke oven gas are produced. The volatile products of coal contained in the coke oven gas are recovered in the by-products plant. In addition to the coke oven gas, daily production of these by-products include 145,000 gallons of crude coal tar, 55,000 gallons of light oil, 35 tons of elemental sulfur, and 50 tons of anhydrous ammonia.

The Clairton Plant is located approximately 20 miles south of Pittsburgh on 392 acres along 3.3 miles of the west bank of the Monongahela River. The Plant was built by St Clair Steel Company in 1901 and bought by U.S. Steel in 1904. The first coke batteries were built in 1918. The coke produced is used in the blast furnace operations in the production of molten iron for steel making.

The Clairton Plant is a major source of CO, NO_X, PM, PM_{10}, $PM_{2.5}$, SO_2, VOCs, and Hazardous Air Pollutants (HAPs) as defined in Article XXI §2101.20

The emission units regulated by this permit are summarized in Table II-1:

TABLE II-1
Emission Unit Identification

I.D.	SOURCE DESCRIPTION	CONTROL DEVICE(S)	MAXIMUM CAPACITY	FUEL/RAW MATERIAL	STACK I.D.
P001	Coke Battery No. 1	Pushing Emission Control (PEC) Baghouse (P050 - Serves Batteries 1, 2 & 3)	517,935 tons of coal charged per year	Coal, recycled coke plant materials, and bulk density control additives	S001
P002	Coke Battery No. 2	PEC Baghouse (P050 - Serves Batteries 1, 2 & 3)	517,935 tons of coal charged per year	Coal, recycled coke plant materials, and bulk density control additives	S002
P003	Coke Battery No. 3	PEC Baghouse (P050 - Serves Batteries 1, 2 & 3)	517,935 tons of coal charged per year	Coal, recycled coke plant materials, and bulk density control additives	S003
P007	Coke Battery No. 13	PEC Baghouse (P052 - Serves Batteries 13, 14 & 15)	545,675 tons of coal charged per year	Coal, recycled coke plant materials, and bulk density control additives	S007
P008	Coke Battery No. 14	PEC Baghouse (P052 - Serves Batteries 13, 14 & 15)	545,675 tons of coal charged per year	Coal, recycled coke plant materials, and bulk density control additives	S008

proposed

I.D.	SOURCE DESCRIPTION	CONTROL DEVICE(S)	MAXIMUM CAPACITY	FUEL/RAW MATERIAL	STACK I.D.
P009	Coke Battery No. 15	PEC Baghouse (P052 - Serves Batteries 13, 14 & 15)	545,675 tons of coal charged per year	Coal, recycled coke plant materials, and bulk density control additives	S009
P010	Coke Battery No. 19	PEC Baghouse (P053 - Serves Batteries 19 & 20)	1,002,290 tons of coal charged per year	Coal, recycled coke plant materials, and bulk density control additives	S010
P011	Coke Battery No. 20	PEC Baghouse (P053 - Serves Batteries 19 & 20)	1,002,290 tons of coal charged per year	Coal, recycled coke plant materials, and bulk density control additives	S011
P012	Coke Battery B	PEC Baghouse (P054)	1,491,025 tons of coal charged per year	Coal, recycled coke plant materials, and bulk density control additives	S012
P046	Coke Battery C	PROven® system Pushing Emission Control System Baghouse	1,379,059 tons of coal charged per year	Coal, supplemented with recycled coke plant materials such as tar decanter sludge, bio sludge, and coke oven gas pipeline material, synfuel, metallurgical coke, petroleum coke, coke breeze, synfuel additive, and bulk density control additives; Coke Oven Gas	S046 (Combustion Stack) S047 (PEC Baghouse Stack
P013	Quench Tower No. 1 (Serves Batteries 1, 2 and 3)	Baffles	1,553,805 tons of coal per year	Incandescent coke and water	NA
P051	Quench Tower No. 5A (Serves Batteries 13, 14 & 15)	Baffles	1,637,025 tons of coal per year	Incandescent coke and water	NA
P015	Quench Tower No. 5 (Alternate/Backup-Serves Batteries 13, 14 & 15)	Baffles	1,270,200 tons of coal per year	Incandescent coke and water	NA
P052	Quench Tower No. 7A (Serves Batteries 19 & 20)	Baffles	1,555,630 tons of coal per year	Incandescent coke and water	NA
P016	Quench Tower No. 7 (Alternate/Backup-Serves Batteries 19 & 20)	Baffles	2,004,580 tons of coal per year	Incandescent coke and water	NA
P017	Quench Tower B (Serves Battery B)	Baffles	1,491,025 tons of coal per year	Incandescent coke and water	NA

proposed

I.D.	SOURCE DESCRIPTION	CONTROL DEVICE(S)	MAXIMUM CAPACITY	FUEL/RAW MATERIAL	STACK I.D.
P047	Quench Tower C (Serves Battery C)	Baffles	1,107,384 tons of coke per year	Incandescent coke and water	NA
P019	Desulfurization Plant	Afterburner	6,394,800 tons of coke per year	Coke oven tail gas	S023
P020	Keystone Cooling Tower	Mist Eliminators	39,420,000,000 gallons of water cooled per year	Heated non-contact cooling water	NA
P021	Coke By-Product Recovery Plant	Gas Blanketing	8,240,605 tons of coal charged per year	Raw coke oven gas	
P022	Continuous Barge Unloader No. 1	NA	4,598,635 tons of coal per year	Coal	NA
P023	Continuous Barge Unloader No. 2	NA	3,641,605 tons of coal per year	Coal	NA
P024	Pedestal Crane Unloader	NA	2,792,250 tons of coal per year	Coal	NA
P025	Clam Shell Unloader	NA	2,978,400 tons of coal per year	Coal	NA
P026	Coal Transfer	Dust Suppresant	8,240,605 tons of coal per year	Coal	NA
P027	No.1 Primary Pulverizer	NA	4,598,635 tons of coal per year	Coal	NA
P028	No. 1 Secondary Pulverizer	NA	4,598,635 tons of coal per year	Coal	NA
P029	No. 2 Primary Pulverizer	NA	3,641,605 tons of coal per year	Coal	NA
P030	No. 2 Secondary Pulverizer	NA	3,641,605 tons of coal per year	Coal	NA
P031	Surge Bins and Bunkers	NA	8,240,605 tons of coal per year	Coal	NA
P032	Coke Transfer	NA	3,568,240 tons of coke per year	Coke	NA
P033	Coke Transfer	NA	2,825,830 tons of coke per year	Coke	NA
P034	Coke Screening Station No. 1 (Batteries 1-3)	NA	2,411,190 tons of coke per year	Coke	NA
P035	Coke Screening Station No. 2 (Batteries 13-15, 19 and 20)	NA	2,825,830 tons of coke per year	Coke	NA
P041	Boom Conveyor (coal pile destocking)	NA	5,584,500 tons of coal per year	Coal	NA
P042	Coal and Coke Recycle Screening	NA	262,800 tons of coal and coke per year	Coal and Metallurgical Coke	NA

proposed

I.D.	SOURCE DESCRIPTION	CONTROL DEVICE(S)	MAXIMUM CAPACITY	FUEL/RAW MATERIAL	STACK I.D.
P043	Coke Screening-Peters Creek	NA	3,066,000 tons of coke per year	Metallurgical Coke	NA
P049	No. 4 Coke Screening Station	Two (2) Baghouse Modules plus one (1) spare	3,371,618 tons of coke per year	Metallurgical Coke	S051
P044a	Light Oil Barge Loading	Vapor Recovery to Boiler	55,000,000 gallons per year	Light Oil, Tar, and Tar Distillates	NA
P044b	Light Oil Truck Loading	Vapor Recovery/Balancing System	49,315 gal/ day	Light Oil	NA
P044d	Coal Crude Tar Truck/Rail Loading	NA	130,000 gal average/ day	Coal Crude Tar	NA
P045	Regenerator Stone Cleaning	NA	7,700 tons of stone per year	Regenerator Stones	NA
B001	Boiler No. 1 (Babcock & Wilcox)	NA	760 MMBtu/hour	Coke Oven Gas and Natural Gas	NA
B002	Boiler No. 2 (Combustion Engineering)	NA	481 MMBtu/hour	Coke Oven Gas and Natural Gas	NA
B005	R1 Boiler (Riley Stoker)	NA	229 MMBtu/hour	Coke Oven Gas and Natural Gas	NA
B006	R2 Boiler (Riley Stoker)	NA	229 MMBtu/hour	Coke Oven Gas and Natural Gas	NA
B007	T1 Boiler (Erie City Zurn)	NA	156 MMBtu/hour	Coke Oven Gas and Natural Gas	NA
B008	T2 Boiler (Erie City Zurn)	NA	156 MMBtu/hour	Coke Oven Gas and Natural Gas	NA
B010	Ammonia Flare	NA	12.5 MMBtu/hour	Propane (assist gas)	NA
E001	Coal Storage Piles	NA	164,000 tons of coal (Normal Inventory)	Coal	NA
E002	Coke Storage Pile - Peters Creek	NA	60,000 tons of coal (Normal Inventory)	Coke	NA
E003	Coke Storage Pile – South Yard	NA	20,000 tons of coal (Normal Inventory)	Coke	NA
F001	Fugitive Emissions (Plant Roadways)	Road Dust Control Program	Paved roads = 7.8413 miles Unpaved roads = 1.1742 miles	NA	NA

proposed

I.D.	SOURCE DESCRIPTION	CONTROL DEVICE(S)	MAXIMUM CAPACITY	FUEL/RAW MATERIAL	STACK I.D.
G001	Misc. Fugitive Emissions (Abrasive blasting of coke oven doors)	NA	Approximately 18 coke oven doors per week	Black Beauty Abrasive Material	NA

proposed

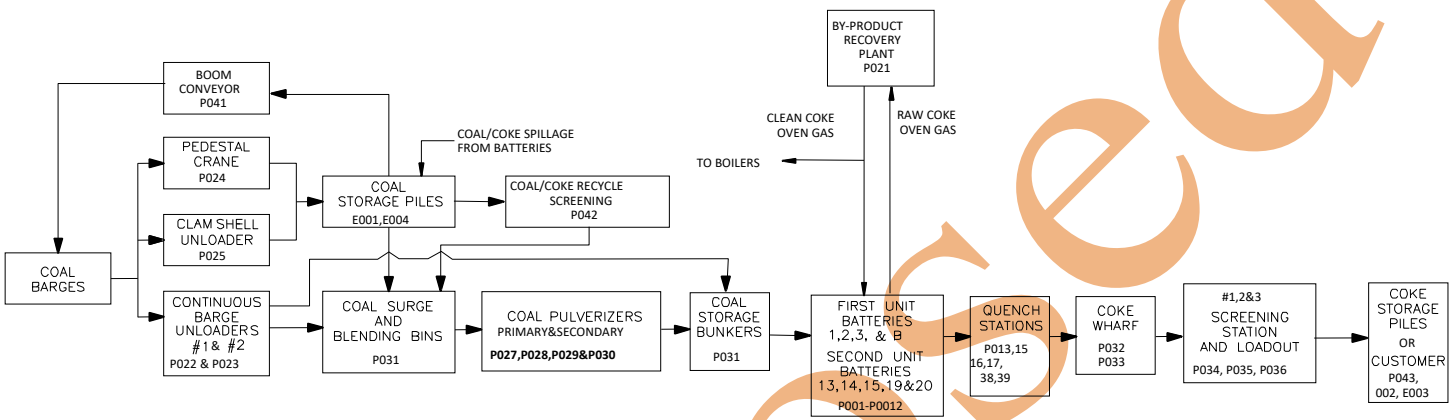

USS, A DIVISION OF USX CORPORATION
CLAIRTON WORKS — CLAIRTON PENNSYLVANIA

GENERAL FACILITY PROCESS FLOW DIAGRAM

FILE	DRW. BY	CHK. BY	APP. BY	DATE	REVISION	DATE	BY
697519b	JS	DB		10/31/00			

proposed

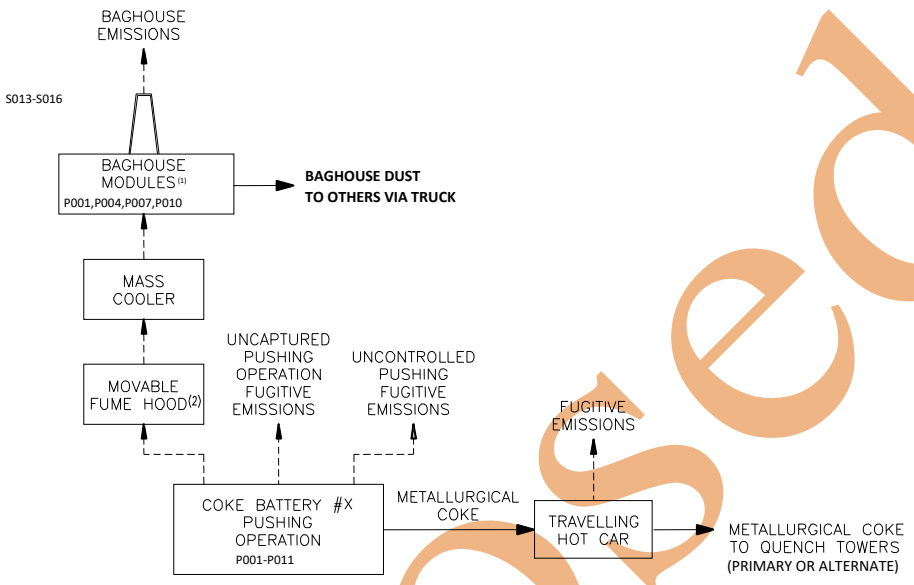

NOTES:

(1) *Each PEC System baghouse has five stacks.*

(2) *There are Four PEC Systems of this type.*
One serves Batteries 1-3, Reference Battery 1 Form A (P001 and S013).

One serves Batteries 13-15, Reference Battery 13 Form A (P007 and S015).
One serves Batteries 19, 20, Reference Battery 19 Form A (P010 and S016).

USS, A DIVISION OF USX CORPORATION
CLAIRTON WORKS — CLAIRTON PENNSYLVANIA

COKE BATTERIES #X
PUSHING EMISSION CONTROL SYSTEM

FILE	DRW. BY	CHK. BY	APP. BY	DATE	REVISION	DATE	BY
697504b	JS	DB		10/23/00			

proposed

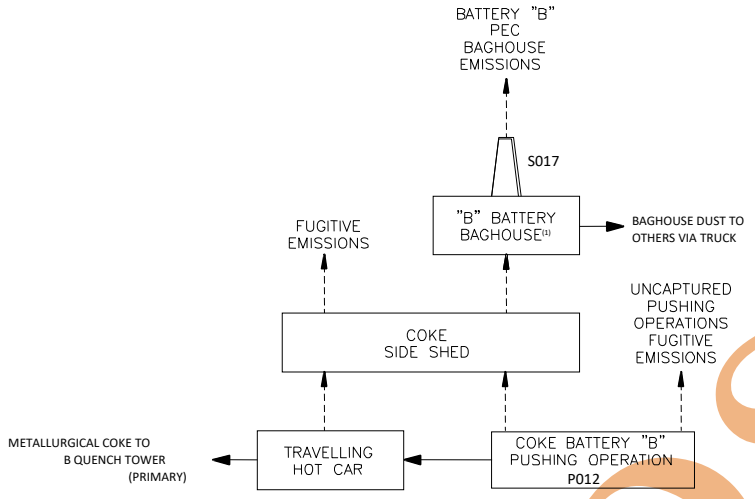

NOTES:

(1) *Battery "B" PEC system baghouse has 14 stacks.*

USS, A DIVISION OF USX CORPORATION
CLAIRTON WORKS — CLAIRTON PENNSYLVANIA

BATTERY "B" PUSHING
EMISSION CONTROL SYSTEM

FILE	DRW. BY	CHK. BY	APP. BY	DATE	REVISION	DATE	BY
697509b	JS	DB		10/31/00			

proposed

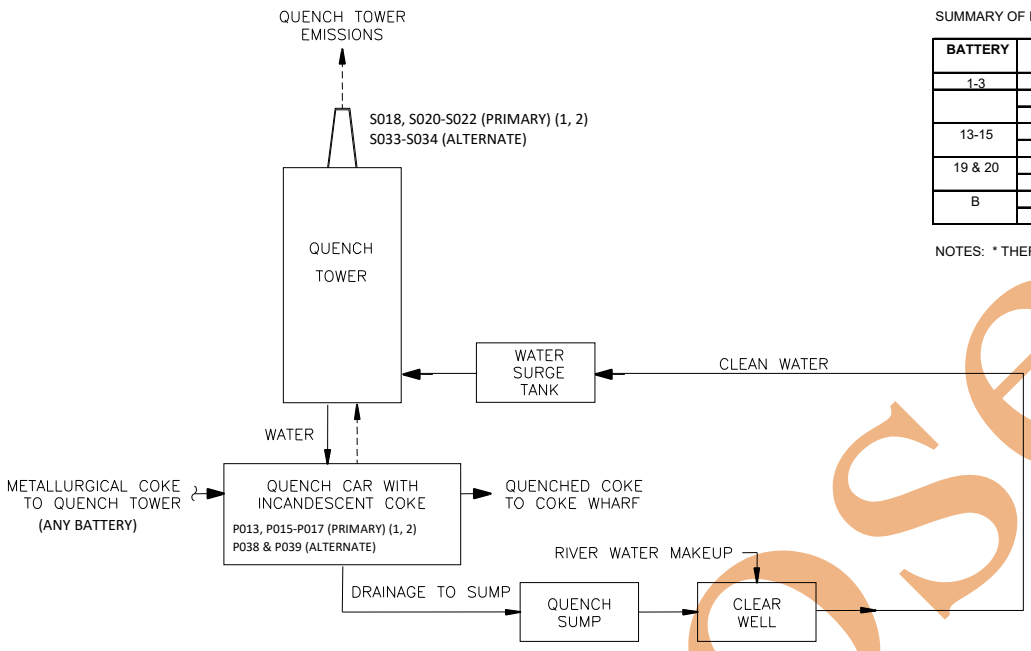

SUMMARY OF BATTERY QUENCH TOWERS

BATTERY	QUENCH TOWER	PROCESS ID NO.	STACK ID NO.
1-3	PRIMARY #1 *	P013	S018
13-15	PRIMARY#5A	P015	S020
	ALTERNATE #5	P038	S033
19 & 20	PRIMARY #7A	P016	S021
	ALTERNATE #7	P039	S034
B	PRIMARY #B	P017	S022

NOTES: * THERE IS NO ALTERNATE QUENCH TOWER FOR BATTERIES 1-3.

NOTES:

(1) *There are Four Primary Quench Towers used for normal operation (Refer to above table)*

(2) *There are Two Alternate Quench Towers used as spares during maintenance (Refer to above table)*

USS, A DIVISION OF USX CORPORATION
CLAIRTON WORKS — CLAIRTON PENNSYLVANIA

QUENCH TOWERS

FILE	DRW. BY	CHK. BY	APP. BY	DATE	REVISION	DATE	BY
697510b	JS	DB		10/31/00			

proposed

QUENCH TOWERS 5A & 7A FOR COKE BATTERIES 13-15 & 19-20 PROCESS FLOW DIAGRAMS

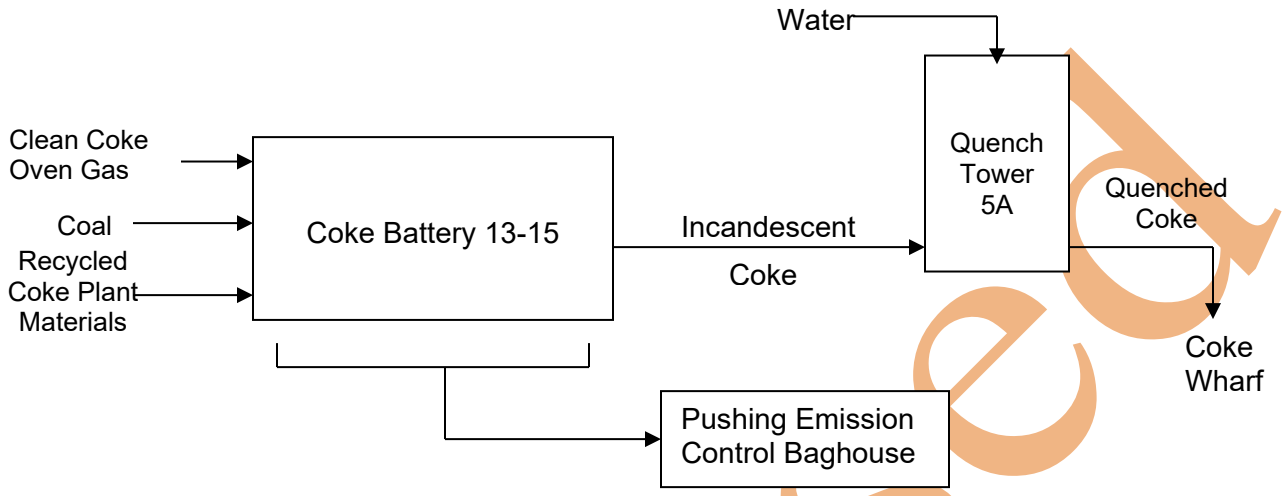

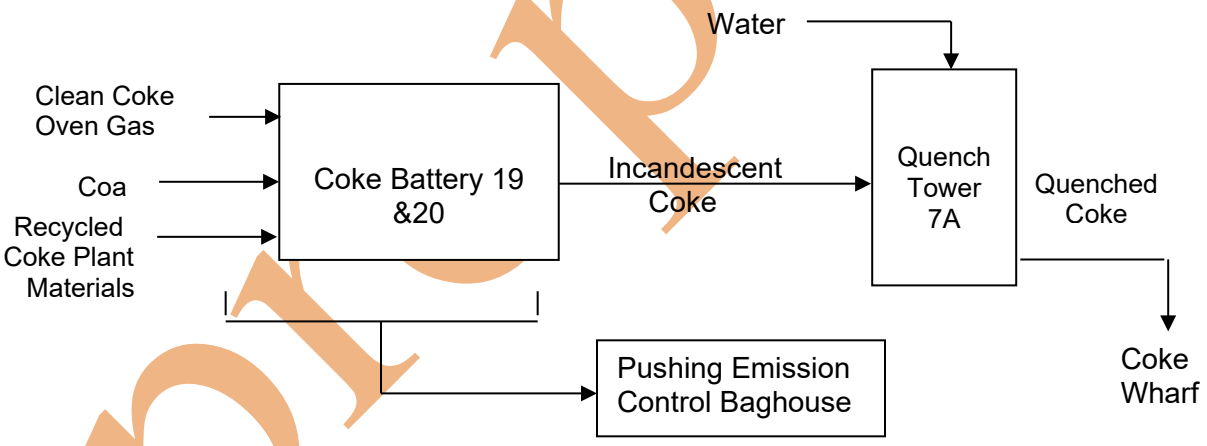

proposed

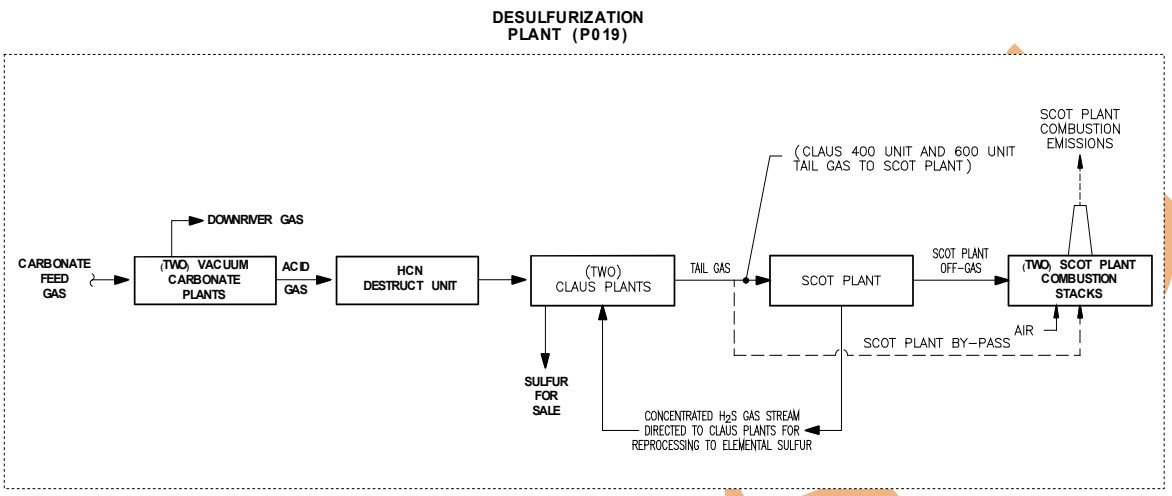

USS, A DIVISION OF USX CORPORATION
CLAIRTON WORKS — CLAIRTON PENNSYLVANIA

DESULFURIZATION PLANT

FILE	DRW. BY	CHK. BY	APP. BY	DATE	REVISION	DATE	BY
697511b	JS	RT		10/ 17/ 00			

proposed

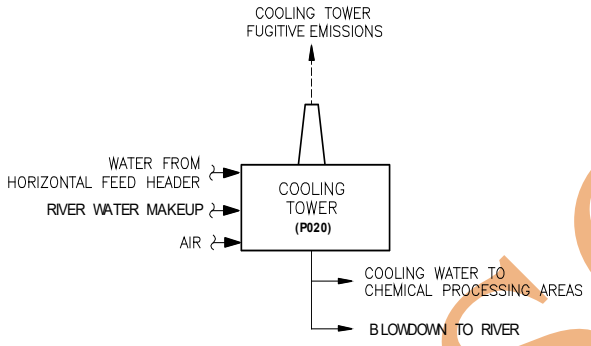

USS, A DIVISION OF USX CORPORATION
CLAIRTON WORKS
CLAIRTON PENNSYLVANIA

KEYSTONE CROSS FLOW COOLING TOWER

FILE	DRW. BY	CHK. BY	APP. BY	DATE	REVISION	DATE	BY
697513b	JS	RT		10/ 17/ 00			

proposed

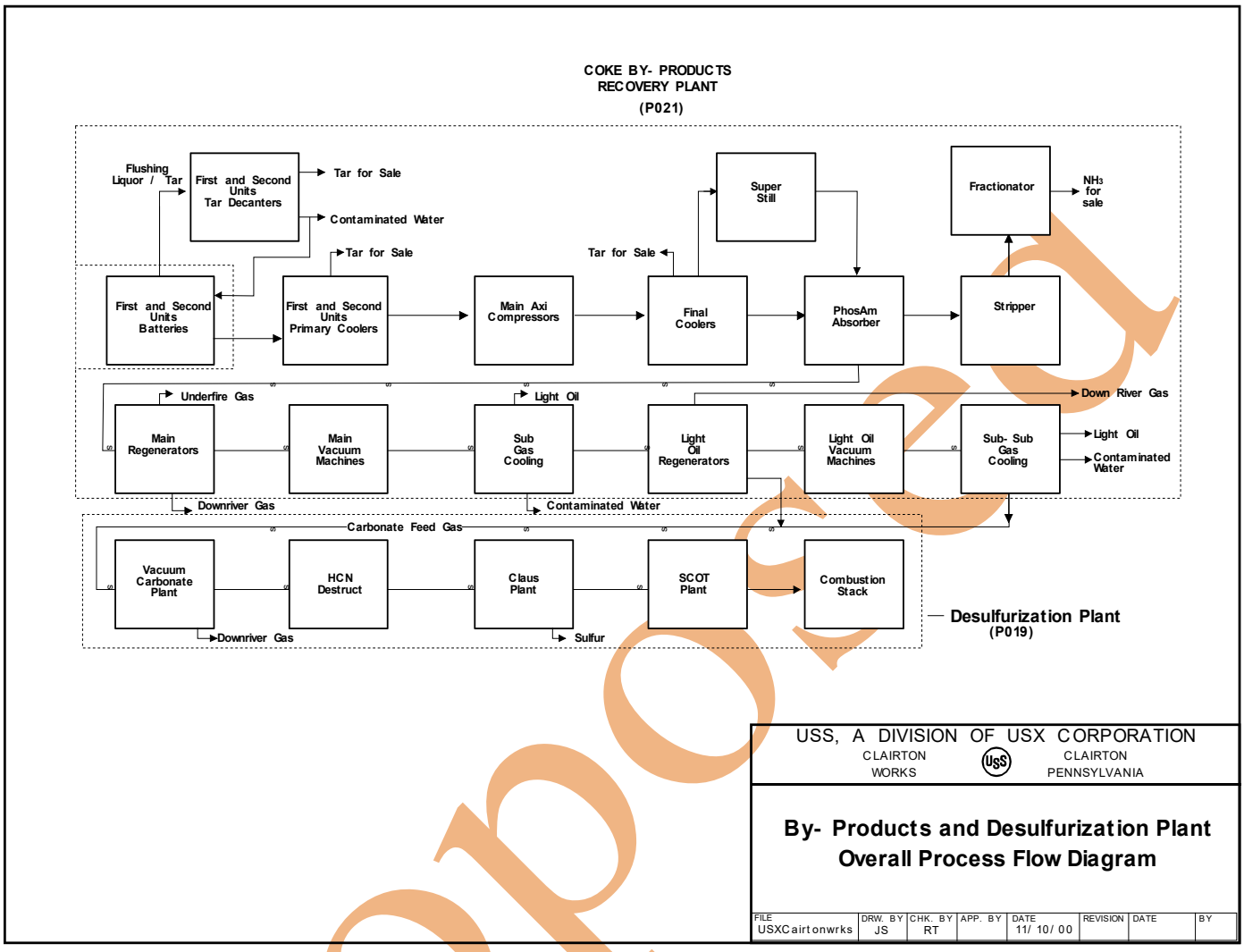
COKE BY- PRODUCTS
RECOVERY PLANT
(P021)
Flushing Liquor / Tar
First and Second Units Tar Decanters
Tar for Sale
Contaminated Water
Tar for Sale
Tar for Sale
Super Still
Fractionator
NH3 for sale
First and Second Units Batteries
First and Second Units Primary Coolers
Main Axi Compressors
Final Coolers
PhosAm Absorber
Stripper
Underfire Gas
Light Oil
Down River Gas
Main Regenerators
Main Vacuum Machines
Sub Gas Cooling
Light Oil Regenerators
Light Oil Vacuum Machines
Sub- Sub Gas Cooling
Light Oil
Contaminated Water
Downriver Gas
Contaminated Water
Carbonate Feed Gas
Vacuum Carbonate Plant
HCN Destruct
Claus Plant
SCOT Plant
Combustion Stack
Downriver Gas
Sulfur
Desulfurization Plant
(P019)
USS, A DIVISION OF USX CORPORATION
CLAIRTON WORKS
CLAIRTON PENNSYLVANIA
By- Products and Desulfurization Plant
Overall Process Flow Diagram
FILE USXClairtonwrks
DRW. BY JS
CHK. BY RT
APP. BY
DATE 11/ 10/ 00
REVISION
DATE
BY

proposed

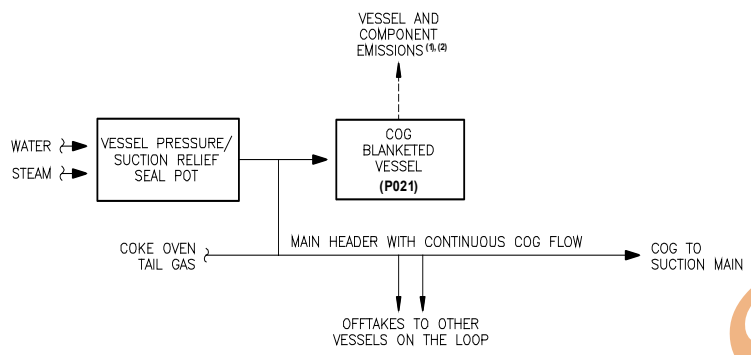

NESHAPS PROCESS LOOPS	NUMBER - TYPE COG BLANKETED PROCESS VESSELS
A	1 - P. C. SUMP
B	12 - TAR DECANTERS, 2 - WEIRS TANKS
C	2 - F. L. CIRCULATING, 4 - TAR RECEIVERS
D	10 - TAR DECANTERS, 2 - WEIRS TANKS
E	4 - TAR RECEIVERS, 2 - F. L. SURGE TANKS
	2 - P. C. CONDENSATE
F	9 - TAR STORAGE, 2 - FLUSHING LIQUOR
G	1 - AMMONIA STILL FEED, 2 - W/W SETTLING
H	3 - FINAL COOLER SUMPS
MAIN VACUUM SUCTION	2 - LIGHT OIL DECANTERS

NOTES:

(1) *Component emissions include fugitive emissions from valves, flanges, pump seals and general equipment.*

(2) *USS assumes 5% of total tar decanters surface area open to atmosphere (uncontrolled).*

USS, A DIVISION OF USX CORPORATION
CLAIRTON WORKS — CLAIRTON PENNSYLVANIA

COKE BY- PRODUCT RECOVERY PROCESS LOOP DIAGRAM

FILE	DRW. BY	CHK. BY	APP. BY	DATE	REVISION	DATE	BY
697517b	JS	RT		10/20/00			

proposed

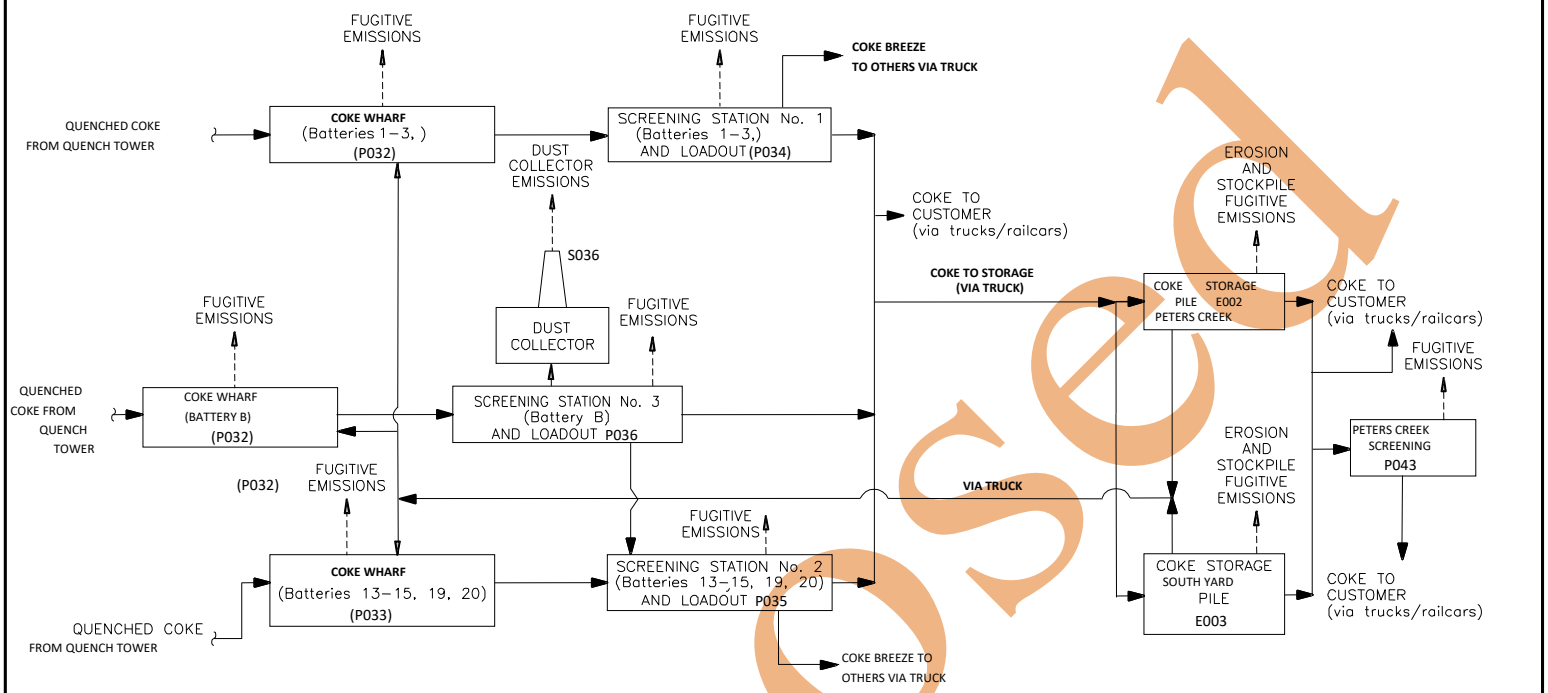

NOTES:

(1) *Customer can receive coke prior to final screening/crushing operation.*

USS, A DIVISION OF USX CORPORATION
CLAIRTON WORKS — CLAIRTON PENNSYLVANIA

COKE HANDLING

FILE	DRW. BY	CHK. BY	APP. BY	DATE	REVISION	DATE	BY
697537b	JS	DB		10/31/00			

proposed

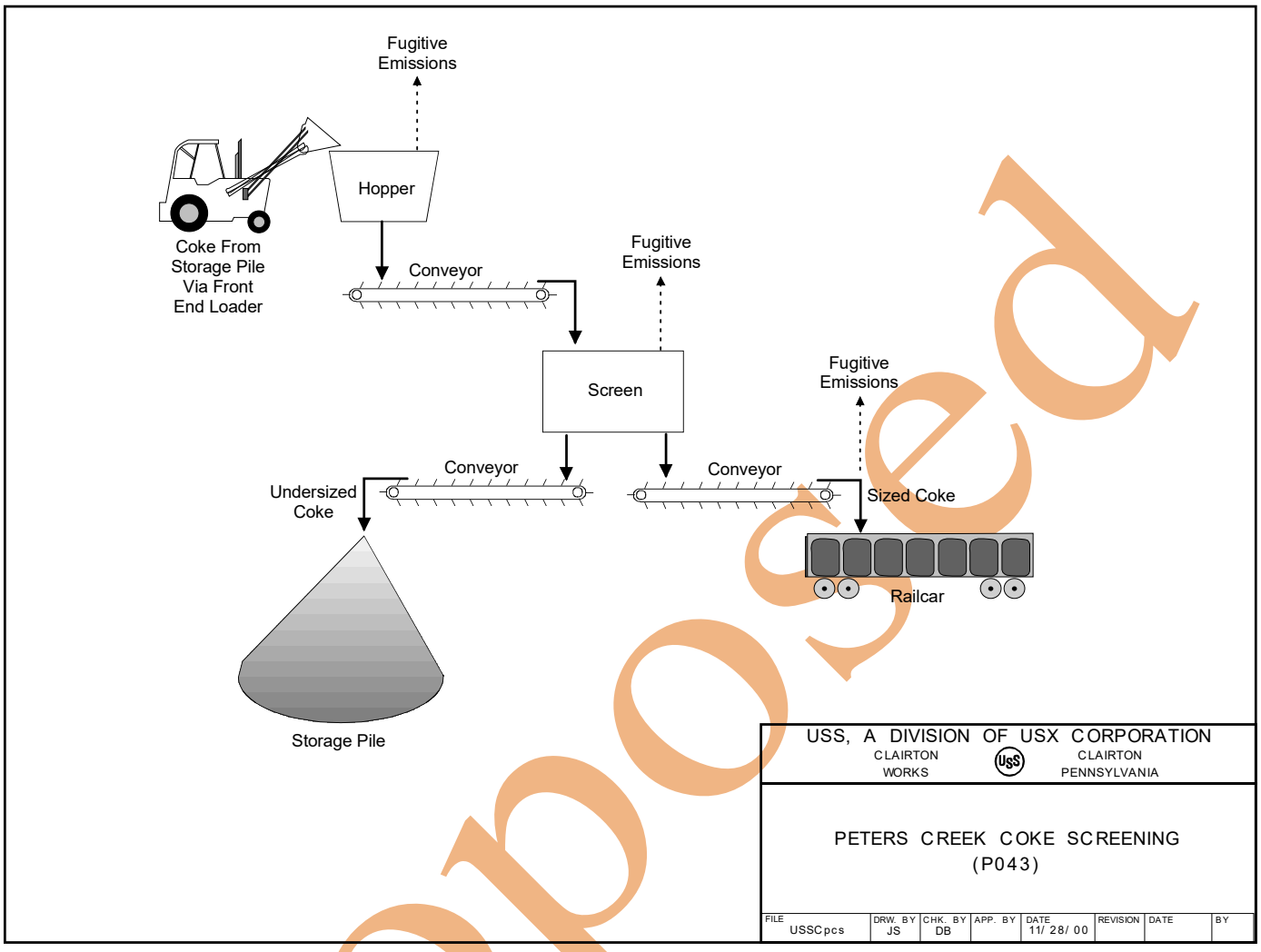
Fugitive Emissions
Hopper
Coke From Storage Pile Via Front End Loader
Conveyor
Fugitive Emissions
Screen
Fugitive Emissions
Conveyor
Conveyor
Undersized Coke
Sized Coke
Railcar
Storage Pile
USS, A DIVISION OF USX CORPORATION
CLAIRTON WORKS
CLAIRTON PENNSYLVANIA
PETERS CREEK COKE SCREENING
(P043)
FILE USSCpcs
DRW. BY JS
CHK. BY DB
APP. BY
DATE 11/28/00
REVISION
DATE
BY

proposed

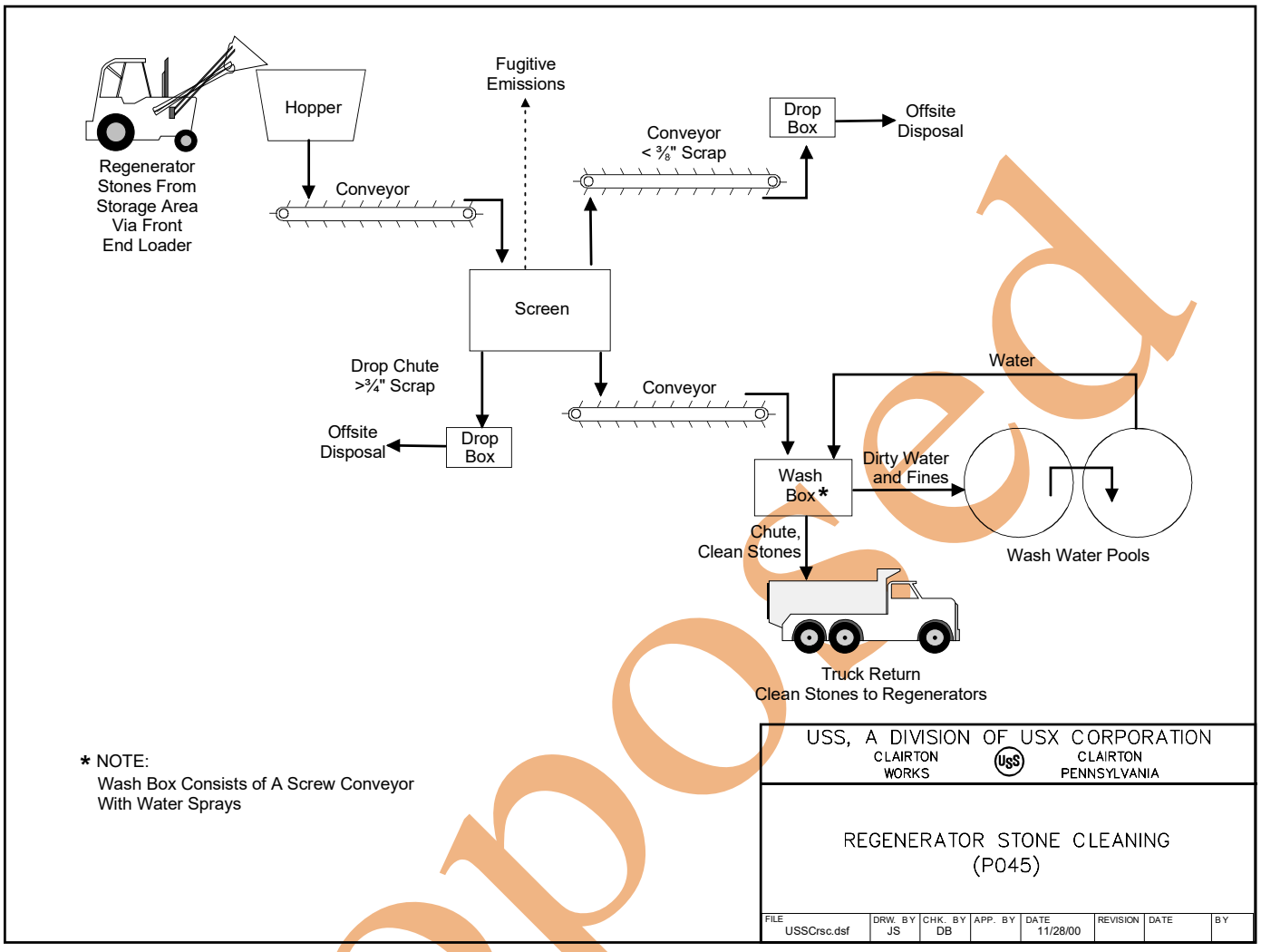
Regenerator Stones From Storage Area Via Front End Loader
Hopper
Conveyor
Fugitive Emissions
Conveyor < ⅜" Scrap
Drop Box
Offsite Disposal
Screen
Drop Chute >¾" Scrap
Drop Box
Offsite Disposal
Conveyor
Water
Wash Box *
Dirty Water and Fines
Wash Water Pools
Chute, Clean Stones
Truck Return Clean Stones to Regenerators
* NOTE:
Wash Box Consists of A Screw Conveyor With Water Sprays
USS, A DIVISION OF USX CORPORATION
CLAIRTON WORKS
CLAIRTON PENNSYLVANIA
REGENERATOR STONE CLEANING (P045)
FILE USSCrsc.dsf
DRW. BY JS
CHK. BY DB
APP. BY
DATE 11/28/00
REVISION
DATE
BY

proposed

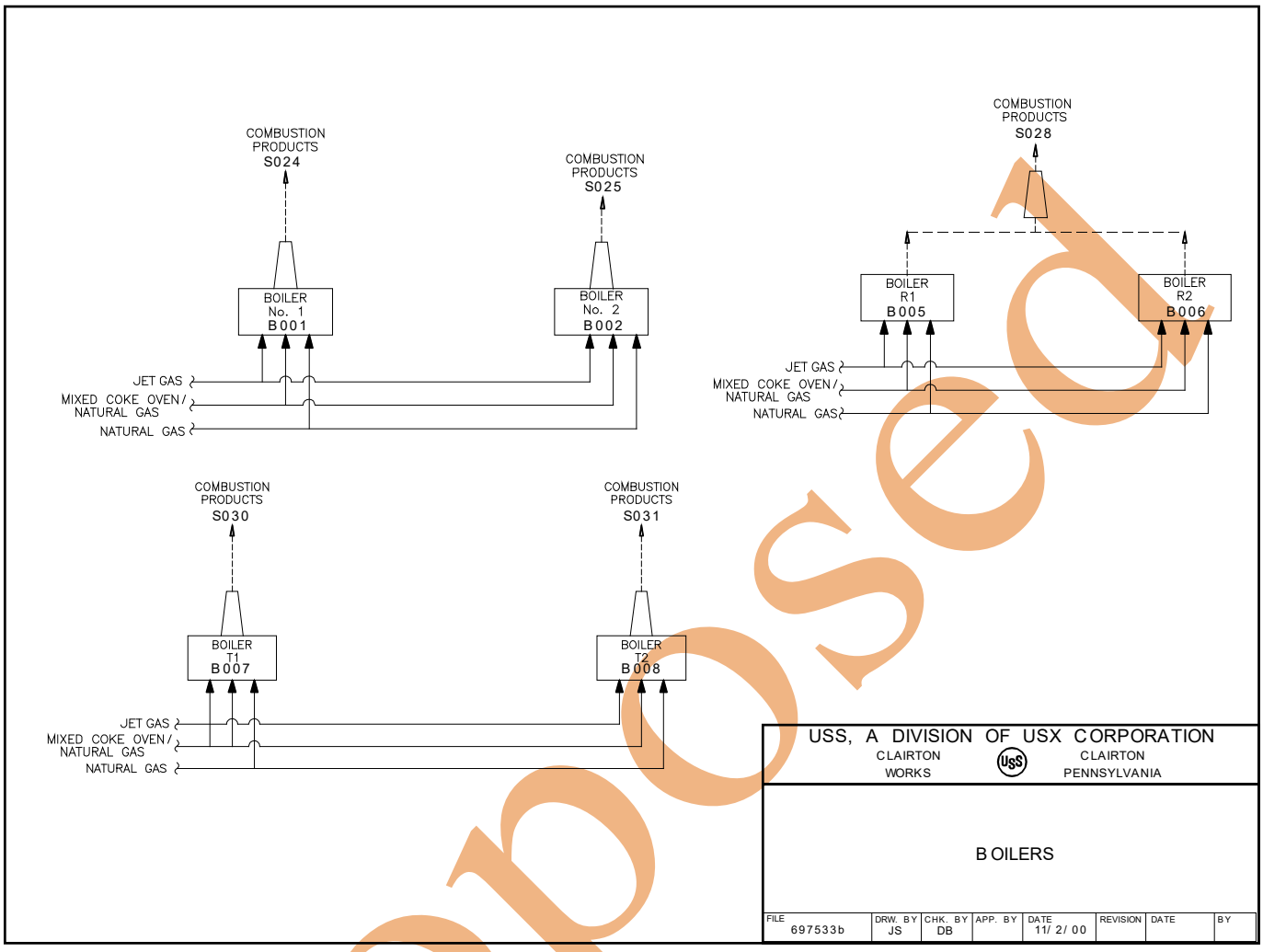
COMBUSTION PRODUCTS S024
BOILER No. 1 B001
COMBUSTION PRODUCTS S025
BOILER No. 2 B002
COMBUSTION PRODUCTS S028
BOILER R1 B005
BOILER R2 B006
COMBUSTION PRODUCTS S030
BOILER T1 B007
COMBUSTION PRODUCTS S031
BOILER T2 B008
JET GAS
MIXED COKE OVEN / NATURAL GAS
NATURAL GAS
USS, A DIVISION OF USX CORPORATION
CLAIRTON WORKS
CLAIRTON PENNSYLVANIA
BOILERS
FILE 697533b
DRW. BY JS
CHK. BY DB
APP. BY
DATE 11/ 2/ 00
REVISION
DATE
BY

proposed

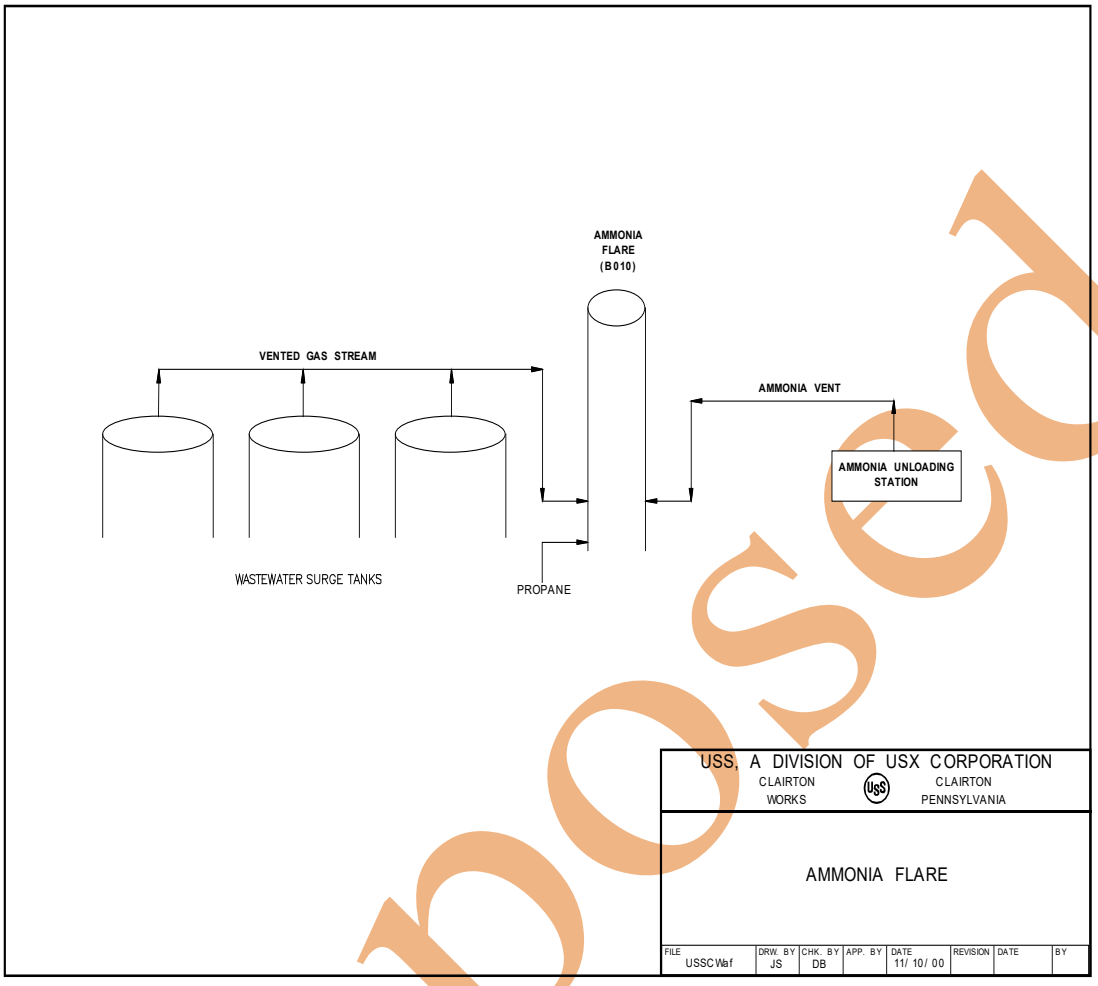
AMMONIA FLARE (B010)
VENTED GAS STREAM
AMMONIA VENT
AMMONIA UNLOADING STATION
WASTEWATER SURGE TANKS
PROPANE
USS, A DIVISION OF USX CORPORATION
CLAIRTON WORKS
CLAIRTON PENNSYLVANIA
AMMONIA FLARE
FILE USSCWaf
DRW. BY JS
CHK. BY DB
APP. BY
DATE 11/ 10/ 00
REVISION
DATE
BY

proposed

Coke Screening and Loadout

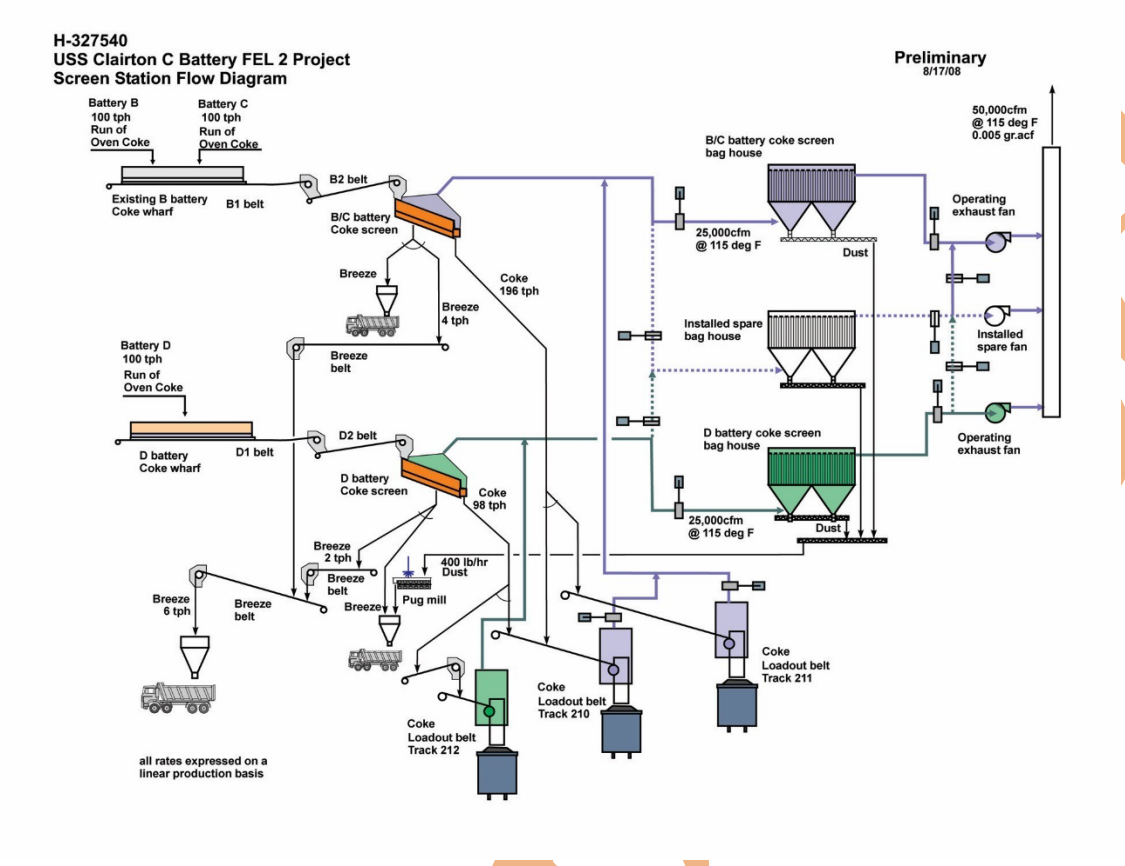

Pulverized Coal Conveying and Storage

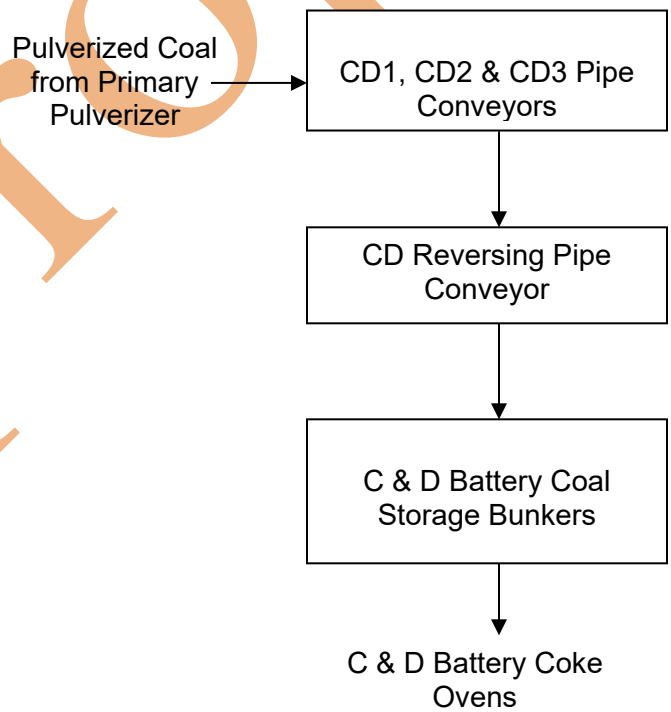

proposed

DECLARATION OF POLICY

Pollution prevention is recognized as the preferred strategy (over pollution control) for reducing risk to air resources. Accordingly, pollution prevention measures should be integrated into air pollution control programs wherever possible, and the adoption by sources of cost-effective compliance strategies, incorporating pollution prevention, is encouraged. The Department will give expedited consideration to any permit modification request based on pollution prevention principles.

The permittee is subject to the terms and conditions set forth below. These terms and conditions constitute provisions of *Allegheny County Health Department Rules and Regulations, Article XXI Air Pollution Control*. The subject equipment has been conditionally approved for operation. The equipment shall be operated in conformity with the plans, specifications, conditions, and instructions which are Part of your application, and may be periodically inspected for compliance by the Department. In the event that the terms and conditions of this permit or the applicable provisions of Article XXI conflict with the application for this permit, these terms and conditions and the applicable provisions of Article XXI shall prevail. Additionally, nothing in this permit relieves the permittee from the obligation to comply with all applicable Federal, State and Local laws and regulations.

III. GENERAL CONDITIONS - Major Source

1. Prohibition of Air Pollution (§2101.11)

It shall be a violation of this permit to fail to comply with, or to cause or assist in the violation of, any requirement of this permit, or any order or permit issued pursuant to authority granted by Article XXI. The permittee shall not willfully, negligently, or through the failure to provide and operate necessary control equipment or to take necessary precautions, operate any source of air contaminants in such manner that emissions from such source:

a. Exceed the amounts permitted by this permit or by any order or permit issued pursuant to Article XXI;
b. Cause an exceedance of the ambient air quality standards established by Article XXI §2101.10; or
c. May reasonably be anticipated to endanger the public health, safety, or welfare.

2. Definitions (§2101.20)

a. Except as specifically provided in this permit, terms used retain the meaning accorded them under the applicable provisions and requirements of Article XXI. Whenever used in this permit, or in any action taken pursuant to this permit, the words and phrases shall have the meanings stated, unless the context clearly indicates otherwise.

b. Unless specified otherwise in this permit or in the applicable regulation, the term "*year*" shall mean any twelve (12) consecutive months.

c. "RACT Plan 234" is defined as the "Plan Approval Order and Agreement No. 234 Upon Consent" dated December 30, 1996.

d. The definitions in 40 CFR Part 63 are hereby incorporated by reference into this permit.

proposed

3. Conditions (§2102.03.c)

It shall be a violation of this permit giving rise to the remedies provided by Article XXI §2109.02, for any person to fail to comply with any terms or conditions set forth in this permit.

4. Certification (§2102.01)

Any report or compliance certification submitted under this permit shall contain written certification by a responsible official as to truth, accuracy, and completeness. This certification and any other certification required under this permit shall be signed by a responsible official of the source, and shall state that, based on information and belief formed after reasonable inquiry, the statements and information in the document are true, accurate, and complete.

5. Transfers (§2102.03.e)

This permit shall not be transferable from one person to another, except in accordance with Article XXI §2102.03.e and in cases of change-in-ownership which are documented to the satisfaction of the Department, and shall be valid only for the specific sources and equipment for which this permit was issued. The transfer of permits in the case of change-in-ownership may be made consistent with the administrative permit amendment procedure of Article XXI §2103.14.b. The required documentation and fee must be received by the Department at least 30 days before the intended transfer date.

6. Term (§2103.12.e, §2103.13.a, §2103.23.b)

a. This permit shall remain valid for five (5) years from the date of issuance, or such other shorter period if required by the Clean Air Act, unless revoked pursuant to Article XXI. The terms and conditions of an expired permit shall automatically continue pending issuance of a new operating permit provided the permittee has submitted a timely and complete application and paid applicable fees required under Article XXI Part C, and the Department through no fault of the permittee is unable to issue or deny a new permit before the expiration of the previous permit.

b. Expiration. Permit expiration terminates the source's right to operate unless a timely and complete renewal application has been submitted consistent with the requirements of Article XXI Part C.

7. Need to Halt or Reduce Activity Not a Defense (§2103.12.f.2)

It shall not be a defense for a permittee in an enforcement action that it would have been necessary to halt or reduce the permitted activity in order to maintain compliance with the conditions of this permit.

8. Property Rights (§2103.12.f.4)

This permit does not convey any property rights of any sort, or any exclusive privilege.

9. Duty to Provide Information (§2103.12.f.5)

a. The permittee shall furnish to the Department in writing within a reasonable time, any information that the Department may request to determine whether cause exists for modifying, revoking and reissuing, or terminating the permit or to determine compliance with the permit. Upon request, the permittee shall also furnish to the Department copies of any records required to be kept by the permit.

proposed

b. Upon cause shown by the permittee the records, reports, or information, or a particular portion thereof, claimed by the permittee to be confidential shall be submitted to the Department in accordance with the requirements of Article XXI, §2101.07.d.4. Information submitted to the Department under a claim of confidentiality, shall be available to the US EPA and the PADEP upon request and without restriction. Upon request of the permittee the confidential information may be submitted to the USEPA and PADEP directly. Emission data or any portions of any draft, proposed, or issued permits shall not be considered confidential.

10. Modification of Section 112(b) Pollutants which are VOCs or PM_{10} (§2103.12.f.7)

Except where precluded under the Clean Air Act or federal regulations promulgated under the Clean Air Act, if this permit limits the emissions of VOCs or PM_{10} but does not limit the emissions of any hazardous air pollutants, the mixture of hazardous air pollutants which are VOCs or PM_{10} can be modified so long as no permit emission limitations are violated. A log of all mixtures and changes shall be kept and reported to the Department with the next report required after each change.

11. Right to Access (§2103.12.h.2)

Upon presentation of credentials and other documents as may be required by law, the permittee shall allow authorized Department and other federal, state, county, and local government representatives to:

a. Enter upon the permittee's premises where a permitted source is located or an emissions-related activity is conducted, or where records are or should be kept under the conditions of the permit;
b. Have access to, copy and remove, at reasonable times, any records that must be kept under the conditions of the permit;
c. Inspect at reasonable times any facilities, equipment (including monitoring and air pollution control equipment), practices, or operations regulated or required under the permit; and
d. As authorized by either Article XXI or the Clean Air Act, sample or monitor at reasonable times substances or parameters for the purpose of assuring compliance with the permit or other applicable requirements.

12. Certification of Compliance (§2103.12.h.5, §2103.22.i.1)

a. The permittee shall submit on an annual basis, certification of compliance with all terms and conditions contained in this permit, including emission limitations, standards, or work practices. The certification of compliance shall be made consistent with General Condition III.4 above and shall include the following information at a minimum:

1) The identification of each term or condition of the permit that is the basis of the certification;
2) The compliance status;
3) Whether any noncompliance was continuous or intermittent;
4) The method(s) used for determining the compliance status of the source, currently and over the reporting period consistent with the provisions of this permit; and
5) Such other facts as the Department may require to determine the compliance status of the source.

proposed

b. All certifications of compliance must be submitted to the Administrator as well as the Department by March 31 of each year for the time period beginning January 1 and ending December 31 of the previous year.

c. The permittee shall submit all compliance certifications to the Administrator as well as the Department. Compliance certifications may be emailed to the Administrator at R3_APD_Permits@epa.gov and to the Department at AQReports@alleghenycounty.us in lieu of mailing a hard copy.

13. Record Keeping Requirements (§2103.12.j.1)

a. The permittee shall maintain records of required monitoring information that include the following:

1) The date, place as defined in the permit, and time of sampling or measurements;
2) The date(s) analyses were performed;
3) The company or entity that performed the analyses;
4) The analytical techniques or methods used;
5) The results of such analyses; and
6) The operating parameters existing at the time of sampling or measurement.

b. The permittee shall maintain and make available to the Department, upon request, records including computerized records that may be necessary to comply with the reporting and emission statements in Article XXI §2108.01.e. Such records may include records of production, fuel usage, maintenance of production or pollution control equipment or other information determined by the Department to be necessary for identification and quantification of potential and actual air contaminant emissions.

14. Retention of Records (§2103.12.j.2)

The permittee shall retain records of all required monitoring data and support information for a period of at least five (5) years from the date of the monitoring sample, measurement, report, or application. Support information includes all calibration and maintenance records and all original strip-chart recordings for continuous monitoring instrumentation, and copies of all reports required by this permit.

15. Reporting Requirements (§2103.12.k)

a. The permittee shall submit reports of any required monitoring at least every six (6) months. All instances of deviations from permit requirements must be clearly identified in such reports. All required reports must be certified by the Responsible Official.

b. Prompt reporting of deviations from permit requirements is required, including those attributable to upset conditions as defined in this permit and Article XXI §2108.01.c, the probable cause of such deviations, and any corrective actions or preventive measures taken.

c. All reports submitted to the Department shall comply with the certification requirements of General Condition III.4 above.

d. Semiannual reports required by this permit shall be submitted to the Department as follows:
1) One semiannual report is due by January 31 of each year for the time period beginning July 1 and ending December 31.

proposed

2) One semiannual report is due by July 31 of each year for the time period beginning January 1 and ending June 30.

e. Quarterly reports shall be submitted within 30 days of the end of the calendar quarter.

f. Reports may be submitted electronically to AQReports@AlleghenyCounty.us. Certification by the responsible official in accordance with General Condition III.4 above shall be provided separately via hard copy.

16. Severability Requirement (§2103.12.l)

The provisions of this permit are severable, and if any provision of this permit is determined by a court of competent jurisdiction to be invalid or unenforceable, such a determination will not affect the remaining provisions of this permit.

17. Existing Source Reactivations (§2103.13.d)

The permittee shall not reactivate any source that has been out of operation or production for a period of one year or more unless the permittee has submitted a reactivation plan request to, and received a written reactivation plan approval from, the Department. Existing source reactivations shall meet all requirements of Article XXI §2103.13.d.

18. Administrative Permit Amendment Procedures (§2103.14.b, §2103.24.b)

An administrative permit amendment may be made consistent with the procedures of Article XXI §2103.14.b and §2103.24.b. Administrative permit amendments are not authorized for any amendment precluded by the Clean Air Act or the regulations thereunder.

19. Revisions and Minor Permit Modification Procedures (§2103.14.c, §2103.24.a)

Sources may apply for revisions and minor permit modifications on an expedited basis in accordance with Article XXI §2103.14.c and §2103.24.a.

20. Significant Permit Modifications (§2103.14.d)

Significant permit modifications shall meet all requirements of the applicable subparts of Article XXI, Part C, including those for applications, fees, public participation, review by affected States, and review by EPA, as they apply to permit issuance and permit renewal. The approval of a significant permit modification, if the entire permit has been reopened for review, shall commence a new full five (5) year permit term. The Department shall take final action on all such permits within nine (9) months following receipt of a complete application.

21. Duty to Comply (§2103.12.f.1, §2103.22.g)

The permittee shall comply with all permit conditions and all other applicable requirements at all times. Any permit noncompliance constitutes a violation of the Clean Air Act, the Air Pollution Control Act, and Article XXI and is grounds for any and all enforcement action, including, but not limited to, permit termination, revocation and reissuance, or modification, and denial of a permit renewal application.

proposed

22. Renewals (§2103.13.b., §2103.23.a, §2103.23.b)

Renewal of this permit is subject to the same fees and procedural requirements, including those for public participation and affected State and EPA review that apply to initial permit issuance. The application for renewal shall be submitted at least six (6) months but not more than eighteen (18) months prior to expiration of this permit. The application shall also include submission of a supplemental compliance review as required by Article XXI §2102.01.

23. Reopenings for Cause (§2103.15, §2103.25.a, §2103.12.f.3)

a. This permit shall be reopened and reissued under any of the following circumstances:

1) Additional requirements under the Clean Air Act become applicable to a major source with a remaining permit term of three (3) or more years. No such reopening is required if the effective date of the requirement is later than the date on which the permit is due to expire, unless the original permit or any of its terms and conditions has been extended solely due to the failure of the Department to act on a permit renewal application in a timely fashion.
2) Additional requirements, including excess emissions requirements, become applicable to an affected source under the acid rain program. Upon approval by the Administrator, excess emissions offset plans shall be deemed to be incorporated into this permit.
3) The Department or EPA determines that this permit contains a material mistake or that inaccurate statements were made in establishing the emissions standards or other terms or conditions of this permit.
4) The Administrator or the Department determines that this permit must be reissued or revoked to assure compliance with the applicable requirements.

b. This permit may be modified; revoked, reopened, and reissued; or terminated for cause. The filing of a request by the permittee for a permit modification, revocation and reissuance, or termination, or of a notification of planned changes or anticipated noncompliance does not stay any permit condition. No permit revision shall be required, under any approved economic incentives, marketable permits, emissions trading, and other similar programs or processes, for changes that are provided for in this permit.

24. Reopenings for Cause by the EPA (§2103.25.b)

This permit may be modified, reopened and reissued, revoked or terminated for cause by the EPA in accordance with procedures specified in Article XXI §2103.25.b.

25. Annual Operating Permit Administration Fee (§2103.40)

In each year during the term of this permit, on or before the last day of the month in which the application for this permit was submitted, the permittee shall submit to the Department, in addition to any other applicable administration fees, an Annual Operating Permit Administration Fee in accordance with §2103.40. by check or money order payable to the "Allegheny County Air Pollution Control Fund" in the amount specified in the fee schedule applicable at that time.

26. Annual Major Source Emissions Fees Requirements (§2103.41)

No later than September 1 of each year, the permittee shall pay an annual emission fee in accordance with Article XXI §2103.41 for each ton of a regulated pollutant (except for carbon monoxide) actually emitted

proposed

from the source. The permittee shall not be required to pay an emission fee for emissions of more than 4,000 tons of each regulated pollutant. The emission fee shall be increased in each year after 1995 by the percentage, if any, by which the Consumer Price Index for the most recent calendar year exceeds the Consumer Price Index for the previous calendar year.

27. Other Requirements not Affected (§2104.08, §2105.02)

Compliance with the requirements of this permit shall not in any manner relieve any person from the duty to fully comply with any other applicable Federal, State, or County statute, rule, regulation, or the like, including but not limited to the odor emission standards under Article XXI §2104.04, any applicable NSPSs, NESHAPs, MACTs, or Generally Achievable Control Technology (GACT) standards now or hereafter established by the EPA, and any applicable requirements of BACT or LAER as provided by Article XXI, any condition contained in any applicable Installation or Operating Permit and/or any additional or more stringent requirements contained in an order issued to such person pursuant to Article XXI Part I.

28. Termination of Operation (§2108.01.a)

In the event that operation of any source of air contaminants is permanently terminated, the person responsible for such source shall so report, in writing, to the Department within 60 days of such termination.

29. Emissions Inventory Statements (§2108.01.e & g)

a. Emissions inventory statements in accordance with Article XXI §2108.01.e, showing the actual emissions of all regulated air pollutants during each calendar year and all supporting information shall be submitted to the Department by March 15 of each year for the preceding calendar year. The Department may require more frequent submittals if the Department determines that more frequent submissions are required by the EPA or that analysis of the data on a more frequent basis is necessary to implement the requirements of Article XXI or the Clean Air Act.

b. The failure to submit any report or update within the time specified, the knowing submission of false information, or the willful failure to submit a complete report shall be a violation of this permit giving rise to the remedies provided by Article XXI §2109.02.

30. Tests by the Department (§2108.02.d)

Notwithstanding any tests conducted pursuant to Article XXI §2108.02, the Department or another entity designated by the Department may conduct emissions testing on any source or air pollution control equipment. At the request of the Department, the person responsible for such source or equipment shall provide adequate sampling ports, safe sampling platforms and adequate utilities for the performance of such tests.

31. Other Rights and Remedies Preserved (§2109.02.b)

Nothing in this permit shall be construed as impairing any right or remedy now existing or hereafter created in equity, common law or statutory law with respect to air pollution, nor shall any court be deprived of such jurisdiction for the reason that such air pollution constitutes a violation of this permit.

32. Enforcement and Emergency Orders (§2109.03, §2109.05)

The person responsible for this source shall be subject to any and all enforcement and emergency orders

proposed

issued to it by the Department in accordance with Article XXI §2109.03, §2109.04 and §2109.05.

a. Upon request, any person aggrieved by an Enforcement Order or Emergency Order shall be granted a hearing as provided by Article XXI §2109.03.d; provided however, that an Emergency Order shall continue in full force and effect notwithstanding the pendency of any such appeal.

b. Failure to comply with an Enforcement Order or immediately comply with an Emergency Order shall be a violation of this permit thus giving rise to the remedies provided by Article XXI §2109.02.

33. Penalties, Fines, and Interest (§2109.07.a)

A source that fails to pay any fee required under this permit when due shall pay a civil penalty of 50% of the fee amount, plus interest on the fee amount computed in accordance with Article XXI §2109.06.a.4 from the date the fee was required to be paid. In addition, the source may have this permit revoked for failure to pay any fee required.

34. Appeals (§2109.10)

In accordance with State Law and County regulations and ordinances, any person aggrieved by an order or other final action of the Department issued pursuant to Article XXI or any unsuccessful petitioner to the Administrator under Article XXI Part C, Subpart 2, shall have the right to appeal the action to the Director in accordance with the applicable County regulations and ordinances.

35. Risk Management (§2104.08, 40 CFR Part 68)

This source, as defined in 40 CFR Part 68.3, is subject to Part 68. This stationary source shall submit and maintain a risk management plan (RMP) by the dates specified in Part 68.10. This stationary source shall certify compliance with the requirements of Part 68 as part of the annual compliance certification as required by General Condition III.12 above.

36. Operational Flexibility (§2103.14.a)

a. The owner or operator shall not make any changes at this source, including trades of increases and decreases in emissions within the permitted source, without first obtaining a permit revision for such changes, unless:

1) The changes do not require an Installation Permit under §2102.04 of this Article or violate the terms of an Operating Permit or an Installation Permit;
2) The permit specifically allows for changes that do not cause specific emissions increases greater than a de minimis emission increase, and the changes do not exceed such emissions increase allowed under the permit, in accordance with General Condition III.37 below;
3) The changes do not violate major source applicable requirements or contravene federally enforceable permit terms and conditions that are monitoring (including test methods), recordkeeping, reporting, or compliance certification requirements; and
4) By no later than seven (7) days prior to the date on which the implementation of the proposed change is commenced, a written notification is submitted to the Department, for attachment to the Department's copy of the relevant permit, which includes:
   A. A brief description of the change within the permitted source;
   B. The date on which the change will occur;

proposed

C. The pollutants emitted; and
D. Any change in emissions.

37. De Minimis Emission Increases (§2103.14.e)

a. The Department may allow, as a condition of an Operating Permit, *de minimis* emission increases from a new or existing source up to the amounts authorized in condition III.37.d below.

b. A *de minimis* increase may not occur at a source if it either:
1) Increases the emissions of a pollutant regulated under Section 112 of the Clean Air Act (42 U.S.C.A. §7412) except as authorized in conditions III.37.d.4) and 5) below;
2) Subjects the source to the permit requirements of Article XXI, §§2102.05, 2102.06, or 2102.07 (relating to prevention of significant deterioration of air quality and major new source and major modification review); or
3) Violates an applicable requirement of this Article, the state Air Pollution Control Act, the Clean Air Act, or the regulations promulgated under the Air Pollution Control Act or the Clean Air Act.

c. The permittee shall provide the Department with 7 days prior written notice of any *de minimis* emission increase. The notice shall identify and describe the pollutants that will be emitted as a result of the *de minimis* emissions increase and provide emission rates in tons/year and in terms necessary to establish compliance consistent with any applicable requirement. The Department may disapprove or condition the *de minimis* emission increase at any time.

d. Except as provided in condition III.37.e below, the maximum *de minimis* emission rate increases, as measured in tons/year, that may be authorized in the permit during the term of the permit are:
1) Four tons of carbon monoxide from an emissions unit during the term of the permit and 20 tons of carbon monoxide at the source during the term of the permit;
2) One ton of NO_X from an emissions unit during the term of the permit and 5 tons of NO_X at the source during the term of the permit;
3) One and six-tenths tons of oxides of sulfur from an emissions unit during the term of the permit and 8.0 tons of oxides of sulfur at the source during the term of the permit;
4) Six-tenths of a ton of PM_{10} from an emissions unit during the term of the permit and 3.0 tons of PM_{10} at the source during the term of the permit. This shall include emissions of a pollutant regulated under Section 112 of the Clean Air Act unless precluded by the Clean Air Act, the regulations thereunder, or Article XXI; and
5) One ton of VOC's from an emissions unit during the term of the permit and 5 tons of VOC's at the source during the term of the permit. This shall include emissions of a pollutant regulated under Section 112 of the Clean Air Act unless precluded by the Clean Air Act, the regulations thereunder, or Article XXI.

e. The Department may allow, as a condition of an operating permit, installation of the minor sources exempted under §2102.04.a.5 of Article XXI.

f. *De minimis* emission threshold levels cannot be met by offsetting emission increases with emission decreases at the same emissions unit.

38. Permit Shield (§2103.22)

a. The permittee's compliance with the conditions of this permit shall be deemed compliance with all

proposed

major source applicable requirements as of the date of permit issuance, provided that:

1) Such major source applicable requirements are included and are specifically identified in the permit; or

2) The Department, in acting on the permit application or revision, determines in writing that other requirements specifically identified are not applicable to the source, and the permit includes the determination or a concise summary thereof.

b. Nothing in Article XXI §2103.22.e or the Title V Permit shall alter or affect the following:

3) The provisions of Section 303 of the Clean Air Act and the provisions of Article XXI regarding emergency orders, including the authority of the Administrator and the Department under such provisions;
4) The liability of any person who owns, operates, or allows to be operated, a source in violation of any major source applicable requirements prior to or at the time of permit issuance;
5) The applicable requirements of the acid rain program, consistent with Section 408(a) of the Clean Air Act; or
6) The ability of the EPA or the County to obtain information from the permittee pursuant to Section 114 of the Clean Air Act, the provisions of Article XXI and State law.

c. Unless precluded by the Clean Air Act or regulations therein, final action by the Department on administrative amendments, minor and significant permit modifications, and operational flexibility changes shall be covered by the permit shield provided such amendments, modifications and changes meet the relevant requirements of Article XXI.

d. The permit shield authorized under Article XXI §2103.22 is in effect for the permit terms and conditions as identified in this permit.

39. Circumvention (§2101.14)

For purposes of determining compliance with the provisions of this permit and Article XXI, no credit shall be given to any person for any device or technique, including but not limited to the operation of any source with unnecessary amounts of air, the combining of separate sources except as specifically permitted by Article XXI and the Department, the use of stacks exceeding Good Engineering Practice height as defined by regulations promulgated by the US EPA at 40 CFR §§51.100 and 51.110 and Subpart I, and other dispersion techniques, which without reducing the amount of air contaminants emitted, conceals or dilutes an emission of air contaminants which would otherwise violate the provisions of this Article; except that, for purposes of determining compliance with Article §2104.04 concerning odors, credit for such devices or techniques, except for the use of a masking agent, may be given.

40. Duty to Supplement and Correct Relevant Facts (§2103.11.d.2)

a. The permittee shall provide additional information as necessary to address requirements that become applicable to the source after the date it files a complete application but prior to the Department taking action on the permit application.

b. The permittee shall provide supplementary fact or corrected information upon becoming aware that incorrect information has been submitted or relevant facts were not submitted.

proposed

c. Except as otherwise required by this permit and Article XXI, the Clean Air Act, or the regulations thereunder, the permittee shall submit additional information as necessary to address changes occurring at the source after the date it files a complete application but prior to the Department taking action on the permit application.

d. The applicant shall submit information requested by the Department which is reasonably necessary to evaluate the permit application.

41. Effect (§2102.03.g.)

Except as specifically otherwise provided under Article XXI, Part C, issuance of a permit pursuant to Article XXI Part B or Part C shall not in any manner relieve any person of the duty to fully comply with the requirements of this permit, Article XXI or any other provision of law, nor shall it in any manner preclude or affect the right of the Department to initiate any enforcement action whatsoever for violations of this permit or Article XXI, whether occurring before or after the issuance of such permit. Further, except as specifically otherwise provided under Article XXI Part C the issuance of a permit shall not be a defense to any nuisance action, nor shall such permit be construed as a certificate of compliance with the requirements of this permit or Article XXI.

42. Installation Permits (§2102.04.a.1.)

It shall be a violation of this permit giving rise to the remedies set forth in Article XXI Part I for any person to install, modify, replace, reconstruct, or reactivate any source or air pollution control equipment which would require an installation permit or permit modification in accordance with Article XXI Part B or Part C unless:

a. The Department has first issued an Installation Permit for such source or equipment; or
b. Such action is solely a reactivation of a source with a current Operating Permit, which is approved under §2103.13 of this Article; or
c. Such source is exempt under subsection a.5 of this section.

PERMIT SHIELD IN EFFECT

proposed

IV. SITE LEVEL TERMS AND CONDITIONS

1. Reporting of Upset Conditions (§2103.12.k.2)

The permittee shall promptly report all deviations from permit requirements, including those attributable to upset conditions as defined in Article XXI §2108.01.c, the probable cause of such deviations, and any corrective actions or preventive measures taken.

2. Visible Emissions (§2104.01.a, b)

a. Except as provided for by Article XXI §2108.01.d pertaining to a cold start of fuel burning or combustion equipment, the permittee shall not operate, or allow to be operated, any source in such manner that the opacity of visible emissions from a flue or process fugitive emissions from such source, excluding uncombined water:

1) Equal or exceed an opacity of 20% for a period or periods aggregating more than three (3) minutes in any sixty (60) minute period; or,
2) Equal or exceed an opacity of 60% at any time.

b. Condition IV.2.a above shall not apply to coke ovens or a battery of coke ovens; incinerators; or visible emissions resulting from the cold start of fuel burning or combustion equipment, if such cold start has been reported as required by §2108.01.d.

3. Odor Emissions (§2104.04) (*County-only enforceable*)

The permittee shall not operate, or allow to be operated, any source in such manner that emissions of malodorous matter from such source are perceptible beyond the property line.

4. Materials Handling (§2104.05)

The permittee shall not conduct, or allow to be conducted, any materials handling operation in such manner that emissions from such operation are visible at or beyond the property line of the affected source.

5. Operation and Maintenance (§2105.03)

All air pollution control equipment required by this permit or any order under Article XXI, and all equivalent compliance techniques approved by the Department, shall be properly installed, maintained, and operated consistently with good air pollution control practice.

6. Open Burning (§2105.50)

No person shall conduct, or allow to be conducted, the open burning of any material, except where the Department has issued an Open Burning Permit to such person in accordance with Article XXI §2105.50 or where the open burning is conducted solely for the purpose of non-commercial preparation of food for human consumption, recreation, light, ornament, or provision of warmth for outside workers, and in a manner which contributes a negligible amount of air contaminants.

proposed

7. PM_{10} Self Audit Emergency Action Plan (§2106.05)

a. The permittee shall submit and maintain a PM_{10} self audit emergency action plan, consistent with good industrial practice and safe operating procedures, designed to reduce emissions of air contaminants during high concentrations of particulate matter. This plan shall meet the requirements of Condition IV.7.c below, and shall be consistent with any further guidance developed by the Department in the administration Article XXI §2106.05.

b. The Plan required by Condition IV.7.a above shall be in writing and shall specify the system of monitoring particulate matter, the size or sizes of particulate matter that are being monitored, at least three levels of alert stages, and the actions that will be taken by the permittee at each alert stage.

c. The Plan shall specify at least three phases of actions, and identify the levels that activate these phases. The goal of the first phase of action shall be to provide for the assurance of proper operation of all units. The goal of the second phase of action shall be to provide reduction of emissions of air contaminants by modifying, ceasing, curtailing, deferring or postponing production and allied operations. The goal of the third phase of action shall be to provide substantial reduction to emissions of air contaminants by modifying, ceasing, curtailing, deferring, or postponing production and allied operations. Curtailment shall be obtained without causing injury to persons or substantial damage to equipment.

d. This plan shall be kept on site and made available to the Department upon request.

e. If the Plan, as required by Condition IV.7.a above, is not acceptable to the Department, the Department shall issue an order directing the permittee to modify and resubmit the plan within 30 days after receiving notice. The order shall specify the reason or reasons for disapproval and shall specify the changes or additions necessary to make the plan acceptable to the Department. In the event that the permittee fails to resubmit a plan or fails to resubmit a plan in accordance with the changes or additions recommended by the Department, the Department, in addition to any other remedies available to it under this Article, shall have the authority to issue an order to that person detailing the procedures for an early warning system and emergency plan.

f. The permittee shall advise the Department in writing of any changes affecting the technical content or the implementation of the plan within 30 days of their occurrence. Such submittals shall be processed according to the procedures described in Subsection e above.

8. Shutdown of Control Equipment (§2108.01.b)

a. In the event any air pollution control equipment is shut down for reasons other than a breakdown, the person responsible for such equipment shall report, in writing, to the Department the intent to shut down such equipment at least 24 hours prior to the planned shutdown. Notwithstanding the submission of such report, the equipment shall not be shut down until the approval of the Department is obtained; provided, however, that no such report shall be required if the source(s) served by such air pollution control equipment is also shut down at all times that such equipment is shut down.

b. The Department shall act on all requested shutdowns as promptly as possible. If the Department does not take action on such requests within ten (10) calendar days of receipt of the notice, the request shall be deemed denied, and upon request, the owner or operator of the affected source shall

proposed

have a right to appeal in accordance with the provisions of Article XI.

c. The prior report required by Site Level Condition IV.8.a above shall include:

1) Identification of the specific equipment to be shut down, its location and permit number (if permitted), together with an identification of the source(s) affected;
2) The reasons for the shutdown;
3) The expected length of time that the equipment will be out of service;
4) Identification of the nature and quantity of emissions likely to occur during the shutdown;
5) Measures, including extra labor and equipment, which will be taken to minimize the length of the shutdown, the amount of air contaminants emitted, or the ambient effects of the emissions;
6) Measures which will be taken to shut down or curtail the affected source(s) or the reasons why it is impossible or impracticable to shut down or curtail the affected source(s) during the shutdown; and
7) Such other information as may be required by the Department.

d. Written notice required under condition IV.8.a above may be emailed to the Department at AQReports@alleghenycounty.us in lieu of mailing a hard copy.

9. Breakdowns (§2108.01.c)

a. In the event that any air pollution control equipment, process equipment, or other source of air contaminants breaks down in such manner as to have a substantial likelihood of causing the emission of air contaminants in violation of this permit, or of causing the emission into the open air of potentially toxic or hazardous materials, the person responsible for such equipment or source shall immediately, but in no event later than sixty (60) minutes after the commencement of the breakdown, notify the Department of such breakdown and shall, as expeditiously as possible but in no event later than seven (7) days after the original notification, provide written notice to the Department.

b. To the maximum extent possible, all oral and written notices required shall include all pertinent facts, including:

1) Identification of the specific equipment which has broken down, its location and permit number (if permitted), together with an identification of all related devices, equipment, and other sources which will be affected.
2) The nature and probable cause of the breakdown.
3) The expected length of time that the equipment will be inoperable or that the emissions will continue.
4) Identification of the specific material(s) which are being, or are likely to be emitted, together with a statement concerning its toxic qualities, including its qualities as an irritant, and its potential for causing illness, disability, or mortality.
5) The estimated quantity of each material being or likely to be emitted.
6) Measures, including extra labor and equipment, taken or to be taken to minimize the length of the breakdown, the amount of air contaminants emitted, or the ambient effects of the emissions, together with an implementation schedule.
7) Measures being taken to shut down or curtail the affected source(s) or the reasons why it is impossible or impractical to shut down the source(s), or any part thereof, during the breakdown.

c. Notices required shall be updated, in writing, as needed to advise the Department of changes in the

proposed

information contained therein. In addition, any changes concerning potentially toxic or hazardous emissions shall be reported immediately. All additional information requested by the Department shall be submitted as expeditiously as practicable.

d. Unless otherwise directed by the Department, the Department shall be notified whenever the condition causing the breakdown is corrected or the equipment or other source is placed back in operation by no later than 9:00 AM on the next County business day. Within seven (7) days thereafter, written notice shall be submitted pursuant to Conditions a and b above.

e. Breakdown reporting shall not apply to breakdowns of air pollution control equipment which occur during the initial startup of said equipment, provided that emissions resulting from the breakdown are of the same nature and quantity as the emissions occurring prior to startup of the air pollution control equipment.

f. In no case shall the reporting of a breakdown prevent prosecution for any violation of this permit or Article XXI.

g. Written notice required under condition IV.9.a above may be emailed to the Department at AQReports@alleghenycounty.us in lieu of mailing a hard copy.

10. Cold Start (§2108.01.d)

In the event of a cold start on any fuel-burning or combustion equipment, except stationary internal combustion engines and combustion turbines used by utilities to meet peak load demands, the person responsible for such equipment shall report in writing to the Department the intent to perform such cold start at least 24 hours prior to the planned cold start. Such report shall identify the equipment and fuel(s) involved and shall include the expected time and duration of the startup. Upon written application from the person responsible for fuel-burning or combustion equipment which is routinely used to meet peak load demands and which is shown by experience not to be excessively emissive during a cold start, the Department may waive these requirements and may instead require periodic reports listing all cold starts which occurred during the report period. The Department shall make such waiver in writing, specifying such terms and conditions as are appropriate to achieve the purposes of Article XXI. Such waiver may be terminated by the Department at any time by written notice to the applicant. Cold start notifications may be emailed to the Department at AQReports@alleghenycounty.us.

11. Monitoring of Malodorous Matter Beyond Facility Boundaries (§2104.04) (County-Only Enforceable)

The permittee shall take all reasonable action as may be necessary to prevent malodorous matter from becoming perceptible beyond facility boundaries. Further, the permittee shall perform such observations as may be deemed necessary along facility boundaries to ensure that malodorous matter beyond the facility boundary in accordance with Article XXI §2107.13 is not perceptible and record all findings and corrective action measures taken.

12. Orders (§2108.01.f)

In addition to meeting the requirements of General Condition III.28 and III.29, and Site Level Conditions IV.8 through IV.10, inclusive, the person responsible for any source shall, upon order by the Department, report to the Department such information as the Department may require in order to assess the actual and

proposed

potential contribution of the source to air quality. The order shall specify a reasonable time in which to make such a report.

13. Violations (§2108.01.g)

The failure to submit any report or update thereof required by General Condition III.28 and Site Level Conditions IV.8 through IV.12 above, inclusive, within the time specified, the knowing submission of false information, or the willful failure to submit a complete report shall be a violation of this permit giving rise to the remedies provided by Article XXI §2109.02.

14. Emissions Testing (§2108.02)

a. On or before December 31, 1981, and at two-year intervals thereafter, any person who operates, or allows to be operated, any piece of equipment or process which has an allowable emission rate, of 100 or more tons per year of particulate matter, sulfur oxides or volatile organic compounds shall conduct, or cause to be conducted, for such equipment or process such emissions tests as are necessary to demonstrate compliance with the applicable emission limitation(s) of this permit and shall submit the results of such tests to the Department in writing. Emissions testing conducted pursuant to this section shall comply with all applicable requirements of Article XXI §2108.02.

b. **Orders.** In addition to meeting the requirements of Site Level Condition IV.14.a above, the person responsible for any source shall, upon order by the Department, conduct, or cause to be conducted, such emissions tests as specified by the Department within such reasonable time as is specified by the Department. Test results shall be submitted in writing to the Department within 20 days after completion of the tests, unless a different period is specified in the Department's order. Emissions testing shall comply with all applicable requirements of Article XXI §2108.02.e.

c. **Tests by the Department.** Notwithstanding any tests conducted pursuant to Site Level Conditions IV.14.a and IV.14.b above, the Department or another entity designated by the Department may conduct emissions testing on any source or air pollution control equipment. At the request of the Department, the person responsible for such source or equipment shall provide adequate sampling ports, safe sampling platforms and adequate utilities for the performance of such tests.

d. **Testing Requirements**. No later than 45 days prior to conducting any tests required by this permit, the person responsible for the affected source shall submit for the Department's approval a written test protocol explaining the intended testing plan, including any deviations from standard testing procedures, the proposed operating conditions of the source during the test, calibration data for specific test equipment and a demonstration that the tests will be conducted under the direct supervision of persons qualified by training and experience satisfactory to the Department to conduct such tests. In addition, at least 30 days prior to conducting such tests, the person responsible shall notify the Department in writing of the time(s) and date(s) on which the tests will be conducted and shall allow Department personnel to observe such tests, record data, provide pre-weighed filters, analyze samples in a County laboratory and to take samples for independent analysis. Test results shall be comprehensively and accurately reported in the units of measurement specified by the applicable emission limitations of this permit.

e. Test methods and procedures shall conform to the applicable reference method set forth in this permit or Article XXI Part G, or where those methods are not applicable, to an alternative sampling and testing procedure approved by the Department consistent with Article XXI §2108.02.e.2.

proposed

f. **Violations**. The failure to perform tests as required by this permit or an order of the Department, the failure to submit test results within the time specified, the knowing submission of false information, the willful failure to submit complete results, or the refusal to allow the Department, upon presentation of a search warrant, to conduct tests, shall be a violation of this permit giving rise to the remedies provided by Article XXI §2109.02.

15. Abrasive Blasting (§2105.51)

a. Except where such blasting is a part of a process requiring an operating permit , no person shall conduct or allow to be conducted, abrasive blasting or power tool cleaning of any surface, structure, or part thereof, which has a total area greater than 1,000 square feet unless such abrasive blasting complies with all applicable requirements of Article XXI §2105.51.

b. In addition to complying with all applicable provisions of §2105.51, no person shall conduct, or allow to be conducted, abrasive blasting of any surface unless such abrasive blasting also complies with all other applicable requirements of Article XXI unless such requirements are specifically addressed by §2105.51.

16. Asbestos Abatement (§2105.62, §2105.63) ***County-only Enforceable***

In the event of removal, encasement, or encapsulation of Asbestos-Containing Material (ACM) at a facility or in the event of the demolition of any facility, the permittee shall comply with all applicable provisions of Article XXI §2105.62 and §2105.63.

17. National Emission Standard for Asbestos (40 CFR§61.145 and §61.150)

In the event of demolition or renovation of asbestos, the permittee shall also comply with all applicable provisions of 40 CFR §61.145 and 40 CFR §61.150.

18. Protection of Stratospheric Ozone (40 CFR Part 82)

a. Permittee shall comply with the standards for labeling of products using ozone-depleting substances pursuant to 40 CFR Part 82, Subpart E:
   1) All containers in which a Class I or Class II substance is stored or transported, all products containing a Class I substance, and all products directly manufactured with a process that uses a Class I substance must bear the required warning statement if it is being introduced into interstate commerce pursuant to §82.106;
   2) The placement of the required warning statement must comply with the requirements pursuant to §82.108;
   3) The form of the label bearing the required warning statement must comply with the requirements pursuant to §82.110; and
   4) No person may modify, remove or interfere with the required warning statement except as described in §82.112.

b. Permittee shall comply with the standards for recycling and emissions reduction pursuant to 40 CFR Part 82, Subpart F:

   1) Persons opening appliances for maintenance, service, repair or disposal must comply with the prohibitions and required practices pursuant to §82.154 and §82.156;

proposed

2) Equipment used during the maintenance, service, repair or disposal of appliances must comply with the standards for recycling and recovery equipment pursuant to §82.158;
3) Persons maintaining, servicing, repairing or disposing of appliances, must be certified by an approved technician certification program pursuant to §82.161;
4) Persons disposing of small appliances, motor vehicle air conditioners (MVAC) and MVAC-like appliances, must comply with the record keeping requirements pursuant to §82.166;
5) Owners of commercial or industrial process refrigeration equipment must comply with the leak repair requirements pursuant to §82.156; and
6) Owners or operators of appliances normally containing 50 or more pounds of refrigerant must keep records of refrigerant purchased and added to such appliances pursuant to §82.166.

c. If the permittee manufactures, transforms, destroys, imports or exports a Class I or Class II substance, the Permittee is subject to all the requirements as specified in 40 CFR Part 82, Subpart A (Production and Consumption Controls).

d. If the permittee performs a service on a motor vehicle that involves an ozone-depleting substance, refrigerant or regulated substitute substance in the MVAC, the Permittee is subject to all the applicable requirements as specified in 40 CFR Part 82, Subpart B (Servicing of Motor Vehicle Air Conditioners).

e. The permittee may switch from any ozone-depleting substance to any alternative that is listed as acceptable in the Significant New Alternatives Policy (SNAP) program promulgated pursuant to 40 CFR Part 82, Subpart G.

19. Volatile Organic Compound Storage Tanks (§2105.12.a)

No person shall place or store, or allow to be placed or stored, a volatile organic compound having a vapor pressure of 1.5 psia or greater under actual storage conditions in any aboveground stationary storage tank having a capacity equal to or greater than 2,000 gallons but less than or equal to 40,000 gallons, unless there is in operation on such tank pressure relief valves which are set to release at the higher of 0.7 psig of pressure or 0.3 psig of vacuum or at the highest possible pressure and vacuum in accordance with State or local fire codes, National Fire Prevention Association guidelines, or other national consensus standard approved in writing by the Department. Petroleum liquid storage vessels that are used to store produced crude oil and condensate prior to lease custody transfer are exempt from these requirements.

20. Permit Source Premises (§2105.40)

a. **General.** No person shall operate, or allow to be operated, any source for which a permit is required by Article XXI Part C in such manner that emissions from any open land, roadway, haul road, yard, or other premises located upon the source or from any material being transported within such source or from any source-owned access road, haul road, or parking lot over five (5) parking spaces:

1) Are visible at or beyond the property line of such source;
2) Have an opacity of 20% or more for a period or periods aggregating more than three (3) minutes in any sixty (60) minute period; or
3) Have an opacity of 60% or more at any time.

b. **Deposition on Other Premises.** Visible emissions from any solid or liquid material that has been deposited by any means from a source onto any other premises shall be considered emissions from such source within the meaning of Site Level Condition IV.20.a above.

proposed

21. Parking Lots and Roadways (§2105.42)

a. The permittee shall not maintain for use, or allow to be used, any parking lot over 50 parking spaces or used by more than 50 vehicles in any day or any other roadway carrying more than 100 vehicles in any day or 15 vehicles in any hour in such manner that emissions from such parking lot or roadway:

7) Are visible at or beyond the property line;
8) Have an opacity of 20% or more for a period or periods aggregating more than three (3) minutes in any 60 minute period; or
9) Have an opacity of 60% or more at any time.

b. Visible emissions from any solid or liquid material that has been deposited by any means from a parking lot or roadway onto any other premises shall be considered emissions from such parking lot or roadway.

c. Site Level Condition IV.21.a above shall apply during any repairs or maintenance done to such parking lot or roadway.

d. Notwithstanding any other provision of this permit, the prohibitions of Site Level Condition IV.21 may be enforced by any municipal or local government unit having jurisdiction over the place where such parking lots or roadways are located. Such enforcement shall be in accordance with the laws governing such municipal or local government unit. In addition, the Department may pursue the remedies provided by Article XXI §2109.02 for any violations of Site Level Condition IV.21.

22. Permit Source Transport (§2105.43)

a. No person shall transport, or allow to be transported, any solid or liquid material outside the boundary line of any source for which a permit is required by Article XXI Part C in such manner that there is any visible emission, leak, spill, or other escape of such material during transport.

b. Notwithstanding any other provision of this permit, the prohibitions of Site Level Condition IV.22 may be enforced by any municipal or local government unit having jurisdiction over the place where such visible emission, leak, spill, or other escape of material during transport occurs. Such enforcement shall be in accordance with the laws governing such municipal or local government unit. In addition, the Department may pursue the remedies provided by Article XXI §2109.02 for any violation of Site Level Condition IV.22.

23. Construction and Land Clearing (§2105.45)

a. No person shall conduct, or allow to be conducted, any construction or land clearing activities in such manner that the opacity of emissions from such activities:

1) Equal or exceed 20% for a period or periods aggregating more than three (3) minutes in any sixty (60) minute period; or
2) Equal or exceed 60% at any time.

b. Notwithstanding any other provision of this permit, the prohibitions of Site Level Condition IV.23 may be enforced by any municipal or local government unit having jurisdiction over the place where such construction or land clearing activities occur. Such enforcement shall be in accordance with the laws governing such municipal or local government unit. In addition, the Department may

proposed

pursue the remedies provided by Article XXI §2109.02 for any violations of Site Level Condition IV.23.

24. Mining (§2105.46)

No person shall conduct, or allow to be conducted, any mining activities in such manner that emissions from such activities:

a. Are visible at or beyond the property line;
b. Have an opacity of 20% or more for a period or periods aggregating more than three (3) minutes in any sixty (60) minute period; or,
c. Have an opacity of 60% or more at any time.

25. Demolition (§2105.47)

a. No person shall conduct, or allow to be conducted, any demolition activities in such manner that the opacity of the emissions from such activities equal or exceed 20% for a period or periods aggregating more than three (3) minutes in any 60 minute period.

b. Notwithstanding any other provisions of this permit, the prohibitions of Site Level Condition IV.25 may be enforced by any municipal or local government unit having jurisdiction over the place where such demolition activities occur. Such enforcement shall be in accordance with the laws governing such municipal or local government unit. In addition, the Department may pursue the remedies provided by Article XXI §2109.02 for any violations of Site Level Condition IV.25.

26. Fugitive Emissions (§2105.49)

The person responsible for a source of fugitive emissions, in addition to complying with all other applicable provisions of this permit shall take all reasonable actions to prevent fugitive air contaminants from becoming airborne. Such actions may include, but are not limited to:

a. The use of asphalt, oil, water, or suitable chemicals for dust control;
b. The paving and maintenance of roadways, parking lots and the like;
c. The prompt removal of earth or other material which has been deposited by leaks from transport, erosion or other means;
d. The adoption of work or other practices to minimize emissions;
e. Enclosure of the source; and
f. The proper hooding, venting, and collection of fugitive emissions.

27. Episode Plans (§2106.01)

The permittee shall upon written request of the Department, submit a source curtailment plan, consistent with good industrial practice and safe operating procedures, designed to reduce emissions of air contaminants during air pollution episodes. Such plans shall meet the requirements of Article XXI Part F.

28. New Source Performance Standards (§2105.05)

a. It shall be a violation of this permit giving rise to the remedies provided by §2109.02 of Article XXI for any person to operate, or allow to be operated, any source in a manner that does not comply with all requirements of any applicable NSPS now or hereafter established by the EPA, except if

proposed

such person has obtained from EPA a waiver pursuant to Section 111 or Section 129 of the Clean Air Act or is otherwise lawfully temporarily relieved of the duty to comply with such requirements.

b. Any person who operates, or allows to be operated, any source subject to any NSPS shall conduct, or cause to be conducted, such tests, measurements, monitoring and the like as is required by such standard. All notices, reports, test results and the like as are required by such standard shall be submitted to the Department in the manner and time specified by such standard. All information, data and the like which is required to be maintained by such standard shall be made available to the Department upon request for inspection and copying.

29. Work Practice Plan Requirements for 40 CFR Part 63 Subpart L

a. The permittee shall prepare and submit to the Department a written emission control work practice plan for each coke oven battery. The plan shall be designed to achieve compliance with visible emission limitations for coke oven doors, topside port lids, offtake systems, and charging operations in conditions V.A.1.i, V.C.1.i, V.E.1.j, V.G.1.h below V.I.1.n below. [§2103.12.h.6; §63.306(a)]

1) The work practice plan must address each of the topics specified in Condition IV.29.b below in sufficient detail and with sufficient specificity to allow the Department to evaluate the plan for completeness and enforceability.
2) The Department may require revisions to the initial plan only where the Department finds either that the plan does not address each subject area listed in Condition IV.29.b below for each emission point subject to a visible emission standard under Conditions V.A.1.i, V.C.1.i, V.E.1.j, V.G.1.h below V.I.1.n below, or that the plan is unenforceable because it contains requirements that are unclear.
3) During any period of time that the permittee is required to implement the provisions of a plan for a particular emission point, the failure to implement one or more obligations under the plan and/or any recordkeeping requirement(s) under Conditions V.A.4.a.2) below,V.E.4.a.2) below, V.G.4.a.2) below, V.I.4.c.2) below for the emission point during a particular day is a single violation.

b. The permittee shall organize the work practice plan to indicate clearly which parts of the plan pertain to each emission point subject to visible emission standards under 40 CFR Part 63 Subpart L. Each of the following provisions, at a minimum, shall be addressed in the plan: [§2103.12.h.6; §63.306(b)]

1) An initial and refresher training program for all coke plant operating personnel with responsibilities that impact emissions, including contractors, in job requirements related to emission control and the requirements of 40 CFR 63, Subpart L, including work practice requirements. Contractors with responsibilities that impact emission control may be trained by the permittee or by qualified contractor personnel; however, the permittee shall ensure that the contractor training program complies with the requirements of Condition IV.29.b above. The training program in the plan must include [§2103.12.h.6; §63.306(b)(1)]:

A. A list, by job title, of all personnel that are required to be trained and the emission point(s) associated with each job title;
B. An outline of the subjects to be covered in the initial and refresher training for each group of personnel;
C. A description of the training method(s) that will be used (e.g., lecture, video tape);

proposed

D. A statement of the duration of initial training and the duration and frequency of refresher training;
E. A description of the methods to be used at the completion of initial or refresher training to demonstrate and document successful completion of the initial and refresher training; and
F. A description of the procedure to be used to document performance of plan requirements pertaining to daily operation of the coke oven battery and its emission control equipment, including a copy of the form to be used, if applicable, as required under the plan provisions implementing Condition IV.29.b.7) below .

2) Procedures for the proper operation of the C Battery PROven® System shall include:

A. Inspection, repair, and replacement of PROven® System components, including the frequency of inspections and methods to be used to evaluate conformance with the operating pressure limits for the collector main and individual ovens as specified in the work practice plan.
B. Procedures for maintaining an adequate inventory of spare parts for the PROven® System
C. Procedures for monitoring and recording collecting main and individual oven pressures.

3) Procedures for controlling emissions from coke oven doors, including [§2103.12.h.6.; §63.306(b)(2)]:

A. A program for the inspection, adjustment, repair, and replacement of coke oven doors and jambs, and any other equipment for controlling emissions from coke oven doors, including a defined frequency of inspections, the method to be used to evaluate conformance with operating specifications for each type of equipment, and the method to be used to audit the effectiveness of the inspection and repair program for preventing exceedances;
B. Procedures for identifying leaks that indicate a failure of the emissions control equipment to function properly, including a clearly defined chain of command for communicating information on leaks and procedures for corrective action;
C. Procedures for cleaning all sealing surfaces of each door and jamb, including identification of the equipment that will be used and a specified schedule or frequency for the cleaning of sealing surfaces;
D. For batteries equipped with self-sealing doors, procedures for use of supplemental gasketing and luting materials, if the permittee elects to use such procedures as part of the program to prevent exceedances;
E. For batteries equipped with hand-luted doors, procedures for luting and reluting, as necessary to prevent exceedances;
F. Procedures for maintaining an adequate inventory of the number of spare coke oven doors and jambs located onsite; and
G. Procedures for monitoring and controlling collecting main back pressure, including corrective action if pressure control problems occur.

4) Procedures for controlling emissions from charging operations, including [§2103.12.h.6.; §63.306(b)(3)]:

A. Procedures for equipment inspection, including the frequency of inspections, and replacement or repair of equipment for controlling emissions from charging, the method to be used to evaluate conformance with operating specifications for each type of equipment, and the method to be used to audit the effectiveness of the inspection and repair program for preventing exceedances;

proposed

B. Procedures for ensuring that the larry car hoppers are filled properly with coal;
C. Procedures for the alignment of the larry car over the oven to be charged;
D. Procedures for filling the oven (e.g., procedures for staged or sequential charging);
E. Procedures for ensuring that the coal is leveled properly in the oven; and
F. Procedures and schedules for inspection and cleaning of offtake systems (including standpipes, standpipe caps, goosenecks, dampers, and mains), oven roofs, charging holes, topside port lids, the steam supply system, and liquor sprays.

5) Procedures for controlling emissions from topside port lids, including [§2103.12.h.6.; §63.306(b)(4)]:

A. Procedures for equipment inspection and replacement or repair of topside port lids and port lid mating and sealing surfaces, including the frequency of inspections, the method to be used to evaluate conformance with operating specifications for each type of equipment, and the method to be used to audit the effectiveness of the inspection and repair program for preventing exceedances; and
B. Procedures for sealing topside port lids after charging, for identifying topside port lids that leak, and procedures for resealing.

6) Procedures for controlling emissions from offtake system(s) on by-product coke oven batteries, including [§2103.12.h.6.; §63.306(b)(5)]:

A. Procedures for equipment inspection and replacement or repair of offtake system components, including the frequency of inspections, the method to be used to evaluate conformance with operating specifications for each type of equipment, and the method to be used to audit the effectiveness of the inspection and repair program for preventing exceedances;
B. Procedures for identifying offtake system components that leak and procedures for sealing leaks that are detected; and
C. Procedures for dampering off ovens prior to a push.

7) Procedures for maintaining, for each emission point subject to visible emission limitations in Conditions V.A.1.i, V.C.1.i, V.E.1.j, V.G.1.h below V.I.1.n below daily record of the performance of plan requirements pertaining to the daily operation of the coke oven battery and its emission control equipment, including [§2103.12.h.6.; §63.306(b)(7)]:

A. Procedures for recording the performance of such plan requirements; and
B. Procedures for certifying the accuracy of such records by the permittee.

8) Any additional work practices or requirements specified by the Department according to Condition IV.29.d below [§2103.12.h.6; §63.306(b)(8)].

c. The permittee shall implement the provisions of the coke oven emission control work practice plan according to the following requirements: [§2103.12.h.6.; §63.306(c)]

1) Implement the provisions of the work practice plan pertaining to a particular emission point following the second independent exceedance of the visible emission limitation for the emission point in any consecutive 6-month period, by no later than 3 days after receipt of written notification of the second such exceedance from the certified observer. For the purpose of this Condition IV.29.c.1), the second exceedance is "independent" if either of the following

proposed

criteria are met [§2103.12.h.6.; §63.306(c)(1)(i)]:

A. The second exceedance occurs 30 days or more after the first exceedance;
B. In the case of coke oven doors, topside port lids, and offtake systems, the 29-run average, calculated by excluding the highest value in the 30-day period, exceeds the value of the applicable emission limitation; or
C. In the case of charging emissions, the 29-day logarithmic average, calculated in accordance with Method 303 in Appendix A to 40 CFR Part 63 by excluding the valid daily set of observations in the 30-day period that had the highest arithmetic average, exceeds the value of the applicable emission limitation.

2) Continue to implement such plan provisions until the visible emission limitation for the emission point is achieved for 90 consecutive days if work practice requirements are implemented pursuant to Condition IV.29.c.1) above. After the visible emission limitation for a particular emission point is achieved for 90 consecutive days, any exceedances prior to the beginning of the 90 days are not included in making a determination under Condition IV.29.c.1) above [§2103.12.h.6.; §63.306(c)(1)(ii)].

d. The permittee may be required to revise the work practice emission control plan according to the following provisions [§2103.12.h.6.; §63.306(d)]:

1) The Department may request the permittee to review and revise as needed the work practice emission control plan for a particular emission point if there are 2 exceedances of the applicable visible emission limitation in the 6-month period that starts 30 days after the permittee is required to implement work practices under Condition IV.29.c above. In the case of a coke oven battery subject to visual emission limitations under 40 CFR Part 63, Subpart L, the second exceedance must be independent under the criteria in Condition IV.29.c.1) above. [§2103.12.h.6; §63.306(d)(1)]
2) The Department may not request the permittee to review and revise the plan more than twice in any 12 consecutive month period for any particular emission point unless the Department disapproves the plan according to the provisions in Condition IV.29.d.6) below. [§2103.12.h.6; §63.306(d)(2)]
3) If the certified observer calculates that a second exceedance (or, if applicable, a second independent exceedance) has occurred, the certified observer shall notify the permittee. No later than 10 days after receipt of such a notification, the permittee shall notify the Department of any finding of whether work practices are related to the cause or the solution of the problem. This notification is subject to review by the Department according to the provisions in Condition IV.29.d.6) below. [§2103.12.h.6; §63.306(d)(3)]
4) The permittee shall submit a revised work practice plan within 60 days of notification from the Department under IV.29.d.1) above, unless the Department grants an extension of time to submit the revised plan. [§2103.12.h.6; §63.306(d)(4)]
5) If the Department requires a plan revision, the Department may require the plan to address a subject area or areas in addition to those in Condition IV.29.b above, if the Department determines that without plan coverage of such an additional subject area, there is a reasonable probability of further exceedances of the visible emission limitation for the emission point for which a plan revision is required. [§2103.12.h.6; §63.306(d)(5)]
6) The Department may disapprove a plan revision required under Condition IV.29.d above if the Department determines that the revised plan is inadequate to prevent exceedances of the visible emission limitations in V.A.1.i below for the emission point for which a plan revision is required or, in the case of a battery not subject to visual emission limitations under this subpart, other federally enforceable emission limitations for such emission point. The Department may also disapprove the finding that may be submitted pursuant to Condition IV.29.d.3) above if

proposed

the Department determines that a revised plan is needed to prevent exceedances of the applicable visible emission limitations. [§2103.12.h.6; §63.306(d)(6)]

30. Performance Tests and Procedure Requirements for 40 CFR Part 63 Subpart L (§63.309):

a. Except as otherwise provided in 40 CFR 63 Subpart L, a daily performance test shall be conducted each day, 7 days per week for each coke battery, the results of which shall be used in accordance with procedures specified in 40 CFR 63, Subpart L to determine compliance with each of the applicable visible emission limitations for coke oven doors, topside port lids, offtake systems, and charging operations in 40 CFR 63, Subpart L. [§63.309(a); §2103.12.h.1; IP 0052-I011b, Condition V.A.2.a]

1) Each performance test is to be conducted according to the procedures and requirements in Condition IV.30.a above and in Method 303 Appendix A to 40 CFR 63, Subpart L or Methods 9 and 22 in Appendix A to 40 CFR Part 60 (where applicable).
2) Each performance test is to be conducted by a certified observer.
3) The certified observer shall complete any reasonable safety training program offered by the permittee prior to conducting any performance test at a coke oven battery.
4) Except as otherwise provided in Condition IV.30.a.5) below, the permittee shall pay an inspection fee to the Department each calendar quarter to defray the costs of the daily performance tests required under Condition IV.30.a above.

A. The inspection fee shall be determined according to Equation 3 of 40 CFR Part 63 Subpart L:

$$F = H \times S \quad \text{(Eq. 3)}$$

Where:
F = Fees to be paid by owner or operator.
H = Total person hours for inspections: 4 hours for 1 coke oven battery, 6.25 hours for 2 coke oven batteries, 8.25 hours for 3 coke oven batteries. For more than 3 coke oven batteries use these hours to calculate the appropriate estimate of person hours.
S = Current average hourly rate for private visible emission inspectors in the relevant market.

B. The Department may revise the value for H in equation 3 within 3 years after October 27, 1993 to reflect the amount of time actually required to conduct the inspections required under paragraph (a) of this section
C. The permittee shall not be required to pay an inspection fee (or any part thereof) under Condition IV.30.a.4) above, for any monitoring or inspection services required by Condition IV.30.a above that the permittee can demonstrate are covered by other fees collected by the Department.
D. Upon request, the Department shall provide the permitee information concerning the inspection services covered by any other fees collected by the Department, and any information relied upon under Condition IV.30.a.4)B above.

5) The EPA shall be the enforcement agency during any period of time that a delegation of enforcement authority is not in effect or a withdrawal of enforcement authority under §63.313 is in effect, and the Administrator is responsible for performing the inspections required by Condition IV.30.a above, pursuant to §63.313(c). [§2102.04.b.6; §63.309(a)(5)(i)]
6) Within thirty (30) days of receiving notification from the Administrator that the EPA is the enforcement agency for a coke oven battery, the permittee shall enter into a contract providing

proposed

for the inspections and performance tests required under Condition IV.30.a above to be performed by a Method 303 certified observer. The inspections and performance tests will be conducted at the expense of the permittee, during the period that the EPA is the implementing agency. [§2102.04.b.6; §63.309(a)(5)(ii)]

b. The certified observer shall conduct each performance test according to the following requirements: [§63.309(c); §2103.12.h.1; IP 0052-I011b, Condition V.A.2.b]

1) The certified observer shall conduct one run each day to observe and record visible emissions from each coke oven door, topside port lid, and offtake system on each coke oven battery The certified observer also shall conduct five runs to observe and record the seconds of visible emissions per charge for five consecutive charges from each coke oven battery C battery. The observer may perform additional runs as needed to obtain and record a visible emissions value (or set of values) for an emission point that is valid under Method 303 in Appendix A to 40 CFR 63, Subpart L. Observations from fewer than five consecutive charges shall constitute a valid set of charging observations only in accordance with the procedures and conditions specified in sections 3.8 and 3.9 of Method 303 in Appendix A to 40 CFR 63, Subpart L. If a valid visible emissions value (or set of values) is not obtained for a performance test, there is no compliance determination for that day. Compliance determinations will resume on the next day that a valid visible emissions value (or set of values) is obtained.
2) After each performance test, the certified observer shall check and record the collecting main pressure according to the procedures in Section 6.3 of Method 303 in Appendix A to 40 CFR 63, Subpart L.
   A. The permittee shall demonstrate pursuant to Method 303 in Appendix A to 40 CFR 63, Subpart L the accuracy of the pressure measurement device upon request of the certified observer;
   B. The permittee shall not adjust the pressure to a level below the range of normal operation during or prior to the inspection;
3) In no case shall the permittee knowingly block a coke oven door, or any portion of a door for the purpose of concealing emissions or preventing observations by the certified observer.

c. Using the observations obtained from each performance test, the Department shall compute and record, in accordance with the procedures and requirements of Method 303 in Appendix A to 40 CFR 63, Subpart L, for each day of operations on which a valid emissions value (or set of values) is obtained: [§63.309(d); §2103.12.h.1; IP 0052-I011b, Condition V.A.2.c]

1) The 30-run rolling average of the percent leaking coke oven doors, topside port lids, and offtake systems on each battery, using the equations in Sections 4.5.3.2, 5.6.5.2, and 5.6.6.2 of Method 303 in Appendix A to 40 CFR 63, Subpart L;
2) For by-product coke oven battery charging operations, the logarithmic 30-day rolling average of the seconds of visible emissions per charge for each battery, using the equation in section 3.9 of Method 303 in appendix A to 40 CFR 63, Subpart L;

d. The certified observer shall make available to the Department as well as to the permittee, a copy of the daily inspection results by the end of the day and shall make available the calculated rolling average for each emission point to the permittee as soon as practicable following each performance test. The information provided by the certified observer is not a compliance determination. For the purpose of notifying the permittee of the results obtained by a certified observer, the person does not have to be certified. [§63.309(e); §2103.12.h.1; IP 0052-I011b, Condition V.A.2.d]

proposed

e. Compliance shall not be determined more often than the schedule provided for performance tests under Condition IV.30.a above. If additional valid emissions observations are obtained (or in the case of charging, valid sets of emission observations), the arithmetic average of all valid values (or valid sets of values) obtained during the day shall be used in any computations performed to determine compliance under Condition IV.30.c aboveor determinations under IV.29 above [§63.309(f); §2103.12.h.1; IP 0052-I011b, Condition V.A.2.a]

f. Compliance with the work practice emission control plan requirements in Condition IV.29 above; standards for bypass/bleeder stacks in Conditions V.A.1.a below, V.C.1.a below, and V.I.1.o below; and standards for collecting mains in Conditions V.A.3.a below, V.I.3.a below, V.I.4.a below, V.I.6.b below and V.I.6.c below is to be determined by the Department based on review of records and inspections. [§63.309(g); §2103.12.h.1; IP 0052-I011b, Condition V.A.2.f]

g. For a flare installed to meet the requirements of Conditions V.A.1.d below, V.E.1.d below, V.E.1.e below, V.G.1.d below, V.G.1.e below, and V.I.1.p below: [§63.309(h); §2103.12.h.1; IP 0052-I011b, Condition V.A.2.g]

1) Compliance with the provisions in Conditions V.A.1.h below and V.I.1.q below (visible emissions from flares) shall be determined using Method 22 in Appendix A to 40 CFR 63, Subpart L, with an observation period of 2 hours; and
2) Compliance with the provisions in Conditions V.A.1.e below, V.C.1.e below, V.E.1.e below, V.G.1.e below, and V.I.1.p.4) below (flare pilot light) shall be determined using a thermocouple or any other equivalent device.

h. No observations obtained during any program for training or for certifying observers under 40 CFR 63, Subpart L shall be used to determine compliance with the requirements of this permit. [§63.309(i); §2103.12.h.1; IP 0052-I011b, Condition V.A.2.h]

31. NO_X Budget Trading Program

a. Clairton boilers B001 and B002 are NO_X Budget units as defined in 25 Pa. Code §145.2. The permittee shall meet the requirements of the PA NOx Budget Trading Program (25 PA Code §145 Subchapter A) for non-EGUs.

b. The permittee shall meet the monitoring and reporting requirements of 40 CFR Part 96, Subpart HHHH (relating to monitoring and reporting) and shall maintain general accounts and account representatives in accordance with 40 CFR Part 96, Subparts BBBB and FFFF (relating to CAIR designated representative for CAIR NO_X ozone season sources and CAIR NO_X ozone season allowance tracking system).

c. Upon request the permittee shall provide a copy of all reports provided to the PADEP required by Condition IV.31.b above.

32. Consent Order and Agreement

Until terminated, the following Consent Decree and Consent Orders and Agreements and subsequent amendments and revisions that apply to U.S. Steel Clairton, are hereby incorporated by reference into this permit:

1) Settlement Agreement and Order, June 29, 2019, amended on February 5, 2020, and August 25, 2021.

proposed

2) Second Consent Decree, Civil Actions Nos. 79-709, 91-329, December 11, 1992. This decree establishes compliance requirements for Batteries 1, 2, 3, 7, 8, 9, 13, 14, 15, 19, 20 and B. The decree includes requirements for charging, door areas, charging ports and charging port seals, offtake piping, pushing, combustion stacks, quenching, and coke oven gas desulfurization.

3) Enforcement Order No. 161 Upon Consent, July 23, 1990, Section 202.E.

4) Enforcement Order No. 200 Upon Consent, November 18, 1999.

5) Enforcement Order and Agreement Upon Consent Number 234, Reasonably Available Control Technology (RACT), January 2, 1997.

33. SO_2 Compliance Monitoring

a. The permittee shall not operate, or allow to be operated, any source in such manner that unburned coke oven gas is emitted into the open air. In addition, the permittee shall not flare, mix, or combust coke oven gas, or allow such gas to be flared, mixed or combusted unless the concentration of sulfur compounds, measured as hydrogen sulfide, in such gas is less than or equal to 35 grains per hundred dry standard cubic feet of coke oven gas produced by the Clairton Plant, when all sulfur emissions from the Claus Sulfur Recovery Plant and the tail gas cleaning equipment thereon, expressed as equivalent H_2S are added to the measured H_2S. The concentration of sulfur compounds specified shall include the tail-gas sulfur, measured as hydrogen sulfide, emitted from sulfur removal equipment. [§2105.21.h; §2105.21.h.4; SO_2 SIP IP 0052-I017, Condition IV.25.a]

b. For the coke oven batteries and boilers, the permittee shall determine the H_2S grain loading and flow rate of the fuel as combusted. The permittee shall record the output of each system for measuring sulfur dioxide emissions discharged to the atmosphere. [SO_2 SIP IP 0052-I017, Condition VI.25.b]

c. Except for monitor malfunctions, associated repairs, and required quality assurance or control activities (including as applicable, calibration checks and required zero and span adjustments), the permittee shall continuously monitor and record the H_2S concentration (in grains(gr)/100 dscf) of the COG combusted and the fuel flow rate required in Site Level Condition IV.33.b above. Continuously shall be defined as at least once every 15 minutes. [§§2103.12.i; SO_2 SIP IP 0052-I017, Condition V.A.3.a]

d. Monitoring of the H_2S concentration of the COG shall meet the requirements of 90% data availability. [§§2103.12.i; SO_2 SIP IP 0052-I017, Condition V.A.3.b]

e. The permittee shall propose, for Department approval, a procedure for measuring the H_2S content of the gas during periods of monitoring malfunction or breakdowns. [§§2103.12.i; SO_2 SIP IP 0052-I017, Condition V.A.3.c]

f. The permittee shall keep records of hourly fuel use (COG and natural gas) and hourly H_2S concentration in grains per 100 dscf. [§2103.12.j; SO_2 SIP IP 0052-I017, Condition V.A.4.a]

proposed

g. SO_2 emissions from B001, B002, B005, B006, B007, and B008 shall not exceed the following limitations (SO_2 SIP IP 0052-I017, Condition V.A.1.b):

SO_2 Emission Limitations for the Boilers

30 day rolling*** average limit (lb/hr)*	Supplementary*** 24-hr Limit* (lb/hr)	Tons/year**
118.44	134.06	518.77

*Limits are based on a rolling 30-day average of 24-hour (calendar day) averages, with an additional restriction of no more than 3 consecutive days above a supplementary 24-hour limit. These limits are based on ACHD's SO_2 State Implementation Plan (SIP) Permit Revision and USEPA SO_2 Guidance dated September 14, 2017.

**Tons/year value is used to demonstrate the expected tons/year from this unit. The value is derived by converting the 30-day rolling average limit lb/hr to an annual tons per year value. These limits are based on ACHD's SO_2 State Implementation Plan (SIP) Permit Revision and USEPA SO_2 Guidance dated September 14, 2017.

***Emission limits are on an aggregate basis

h. The permittee shall report the concentration of H_2S per 100 dscf of COG averaged over a calendar day to the Department on a quarterly basis, in accordance with General Condition III.15.e. All instances of non-compliance with the conditions of this permit along with all corrective action taken to restore the subject equipment to compliance shall be reported. [§2103.12.k; SO_2 SIP IP 0052-I017, Condition V.A.5.a]

34. Greenhouse Gas Reporting (40 CFR Part 98)

If the facility emits 25,000 metric tons or more of carbon dioxide equivalent (CO_2e) in any 12-month period, the facility shall submit reports to the US EPA in accordance with 40 CFR Part 98.

35. Additional Requirements:

The permittee shall permanently shutdown Coke Oven Batteries 1, 2, and 3 no later than June 1, 2023.

PERMIT SHIELD IN EFFECT

proposed

V. EMISSION UNIT LEVEL TERMS AND CONDITIONS

A. Coke Oven Batteries Nos. 1, 2 and 3: P001, P002 and P003

Process Description: Coke Oven Batteries 1, 2 and 3 (identical units):
Facility IDs: P001, P002 and P003
Max. Design Rate: 517,935 tons of coal per year per battery
Capacity: 1,553,805 tons of coal per year for all three batteries combined
Raw Materials: Coal, supplemented with recycled coke plant materials such as tar decanter sludge, bio sludge, and coke oven gas pipeline material; synfuel; metallurgical coke; petroleum coke; coke breeze; Synfuel fuel additives; recycle tire chips; and bulk density control additives such as diesel fuel.

1. Restrictions:

a. The permittee shall install, operate and maintain a bypass/bleeder stack flare system in each battery that is capable of controlling 120 percent of the normal gas flow generated by each battery, which shall thereafter be operated and maintained. [§2103.12.h.6; §63.307(a)(1)]

b. Coke oven emissions shall not be vented to the atmosphere through bypass/bleeder stacks, except through the flare system or the alternative control device as described in V.A.1.c below. [§2103.12.h.6; §63.307(a)(2)]

c. As an alternative to the installation, operation, and maintenance of a flare system as required in Conditions V.A.1.a above and V.A.1.b above, the owner or operator may petition the Administrator and the Department for approval of an alternative control device or system that achieves at least 98 percent destruction or control of coke oven emissions vented to the alternative control device or system. [§2103.12.h.6; §63.307(d)]

d. The emergency bypass/bleeder stack flare system for each battery shall be designed for a net heating value of 240 Btu per standard cubic feet (Btu/scf). [§2103.12.h.6; §63.307(b)(1)]

e. Each flare shall have a continuously operable pilot flame that is present at all times as determined by a thermocouple or any other equivalent device. [§2103.12.h.6; §63.307(b)(2); §63.307(b)(4); §63.309)(h)(2)]

f. The permittee shall not operate, or allow to be operated, coke oven batteries 1, 2 or 3 unless there is installed big plug doors on the coke side of each oven. A big plug door is a door that, when installed, contains a plug with minimum dimensions of 18-¼" minimum width and 14-½" minimum depth. [§2105.21.b.5]

g. At all times including periods of startup, shutdown, and malfunction, the permittee shall operate and maintain the coke oven batteries and the pollution control equipment required under 40 CFR Part 63, Subpart L, in a manner consistent with good air pollution control practices for minimizing emissions to the levels required by any applicable performance standards under Subpart L. Failure to adhere to these requirements shall not constitute a separate violation if a violation of an applicable performance or work practice standard has also occurred. [§2103.12.h.6; §63.310(a)]

proposed

h. Each flare installed to meet the requirements of Conditions V.A.1.a through V.A.1.e above shall be operated with no visible emissions, as determined by Method 22 in Appendix A of 40 CFR Part 60, except for periods not to exceed a total of 5 minutes during any 2 consecutive hours. [§2103.12.h.6.; §63.307(c); §63.309(h)(1)]

i. The permittee shall not cause to be discharged or allow to be discharged to the atmosphere coke oven emissions that exceed any of the following emission limitations: [§2103.12.h.6; §63.304(b)(2)(ii)-(iv); §63.304(b)(3)(ii)]

1) 3.3 percent leaking coke oven doors as determined by the procedures in Condition IV.30.c.1) above;
2) 0.4 percent leaking topside port lids, as determined by the procedures in Condition V.30.c.1) above;
3) 2.5 percent leaking offtake system(s), as determined by the procedures in Condition IV.30.c.1) above; and
4) 12 seconds of visible emissions per charge, as determined by the procedures in Condition IV.30.c.2) above.

j. The permittee shall implement the provisions of the work practice plan required by Condition IV.29 above following the second independent exceedance of the visible emission limitation for the emission point in any consecutive 6-month period, by no later than 3 days after receipt of written notification of the second such exceedance from the certified observer. [§2103.12.h.6; §63.306(c)(1)(i)]

k. The permittee shall not operate, or allow to be operated any battery of coke ovens in such manner that the aggregate of visible charging emissions exceeds a total of 75 seconds during any four (4) consecutive charges on such battery. [§2105.21.a.2]

l. The permittee shall not operate, or allow to be operated Coke Oven Batteries 1, 2 or 3 in such manner that emissions from the door areas of any coke oven exceed an opacity of 40% at any time 15 or more minutes after such oven has been charged. [§2105.21.b.4]

m. The permittee shall not operate, or allow to be operated Coke Oven Batteries 1, 2 or 3 in such manner that, at any time, there are visible emissions from more than eight percent (8%) of the door areas of the operating coke ovens in such battery, excluding the two door areas of the last oven charged and any door areas obstructed from view. [§2105.21.b.3.A, B & C]

n. The permittee shall not operate, or allow to be operated Coke Oven Batteries 1, 2 or 3 in such manner that, at any time, there are visible emissions from more than two percent (2%) of the charging ports or charging port seals on the operating coke ovens of such battery. [§2105.21.c.2]

o. The permittee shall not operate, or allow to be operated Coke Oven Batteries 1, 2 or 3 in such manner that, at any time, there are visible emissions from more than five percent (5%) of the offtake piping on the operating coke ovens of such battery. [§2105.21.d.2]

p. The permittee shall not operate, or allow to be operated Coke Oven Batteries 1, 2 or 3 in such manner that visible emissions from the transport of hot coke in the open atmosphere exceed ten percent (10%) opacity at any time. [§2105.21.e.5]

proposed

q. The permittee shall not operate, or allow to be operated, Coke Oven Batteries 1, 2 or 3 in such manner that, at any time, emissions from the combustion stack serving such battery exceed a particulate concentration of 0.030 grains per dry standard cubic foot. [§2105.21.f.2]

r. The permittee shall not operate, or allow to be operated, Coke Oven Batteries 1, 2 or 3 in such manner that, at any time, emissions from the combustion stack serving each battery equal or exceed an opacity of 20% for a period or periods aggregating in excess of three (3) minutes in any 60 minute period; or equal or exceed an opacity of 60% at any time. [§2105.21.f.3-4]

s. The permittee shall not discharge to the atmosphere any emissions from any battery stack that exhibit an opacity greater than the following applicable limits: [§2103.12.h.6; §63.7296(a)-(b)]
1) Daily average of 15 percent opacity for a battery on a normal coking cycle.
2) Daily average of 20 percent opacity for a battery on batterywide extended coking.

t. The permittee shall submit a notification of compliance status containing the results of the COMS performance test for battery stacks within 30 calendar days following the completion of the compliance demonstration. For each particulate matter emission limitation that applies, the permittee shall submit a notification of compliance status containing the results of the performance test within 60 calendar days following completion of the performance test according to §63.10(d). [§2103.12.h.6; §63.7326(d)]

u. Emissions from combustion stack for Coke Battery No. 1 shall not exceed the emission limitations in Table V-A-1; §2103.12.e; §2101.11.b & c; §2103.12.a.2.B]

TABLE V-A-1 - Emission Limitations for Battery No. 1 Combustion Stack

POLLUTANT	HOURLY EMISSION LIMIT (lb/hr)*	ANNUAL* EMISSION LIMIT (tons/year)[1]
PM	14.47	63.38
PM_{10}	14.47	63.38
$PM_{2.5}$	14.47	63.38
$PM_{condensible}$	3.46	15.17
NO_X	76.81	336.43
CO	40.94	179.32
VOC	2.17	9.50

[1]A year is defined as any consecutive 12-month period.

*NO_X, CO and VOC emissions include combustion stack, soaking, charging, door leaks, lid leaks, offtake leaks, decarbonization.

Proposed

v. SO_2 emissions combustion stack coke oven battery 1 shall not exceed the limitations in Table V-A-1a below: [§2105.21.h; SO_2 SIP IP 0052-I017, Condition V.A.1.b]

TABLE V-A-1a – SO_2 Emission Limitations for Battery No. 1 Combustion Stack

Process	Thirty-day (30-day) Emission Limit* (lb/hr)	Supplementary 24-hr Limit** (lb/hr)[1]	Annual Emission Limit (tons/year)
Battery 1 Underfiring	10.41	13.27	45.60

*Limits are based on a rolling 30-day average of 24-hour (calendar day) averages, with an additional restriction of no more than 3 consecutive days above a supplementary 24-hour limit. These limits are based on ACHD's SO_2 State Implementation Plan (SIP) Permit Revision and USEPA SO_2 Guidance dated September 14, 2017.

**Tons/year value is used to demonstrate the expected tons/year from this unit. The value is derived by converting the 30-day rolling average limit lb/hr to an annual tons per year value. These limits are based on ACHD's SO_2 State Implementation Plan (SIP) Permit Revision and USEPA SO_2 Guidance dated September 14, 2017.

w. Emissions from combustion stack for Coke Battery No. 2 shall not exceed the emission limitations in Table V-A-2 [§2105.21.f.2; §2103.12.e; §2101.11.b & c; §2103.12.a.2.B]

TABLE V-A-2 - Emission Limitations for Battery No. 2 Combustion Stack

POLLUTANT	HOURLY EMISSION LIMIT (lb/hr)**	ANNUAL** EMISSION LIMIT (tons/year)[1]
PM	14.47	63.38
PM_{10}	14.47	63.38
$PM_{2.5}$	14.47	63.38
$PM_{condensible}$	4.64	20.34
NO_X	68.39	299.54
CO	40.67	178.14
VOC	2.08	9.09

[1]A year is defined as any consecutive 12-month period.

**NO_X, CO and VOC emissions include combustion stack, soaking, charging, door leaks, lid leaks, offtake leaks, decarbonization

proposed

x. SO_2 emissions combustion stack coke oven battery 2 shall not exceed the limitations in Table V-A-2a below: [§2105.21.h; SO_2 SIP IP 0052-I017, Condition V.A.1.b]

TABLE V-A-2a – SO_2 Emission Limitations for Battery No. 2 Combustion Stack

Process	Thirty-day (30-day) Emission Limit* (lb/hr)	Supplementary 24-hr Limit** (lb/hr)[1]	Annual Emission Limit (tons/year)[1]
Battery 2 Underfiring	9.15	11.66	40.08

*Limits are based on a rolling 30-day average of 24-hour (calendar day) averages, with an additional restriction of no more than 3 consecutive days above a supplementary 24-hour limit. These limits are based on ACHD's SO_2 State mplementation Plan (SIP) Permit Revision and USEPA SO_2 Guidance dated September 14, 2017.

**Tons/year value is used to demonstrate the expected tons/year from this unit. The value is derived by converting the 30-day rolling average limit lb/hr to an annual tons per year value. These limits are based on ACHD's SO_2 State Implementation Plan (SIP) Permit Revision and USEPA SO_2 Guidance dated September 14, 2017.

y. Emissions from combustion stack for Coke Battery No. 3 shall not exceed the emission limitations in Table V-A-3 [§2105.21.f.2; §2103.12.e; §2101.11.b & c; §2103.12.a.2.B]

TABLE V-A-3 - Emission Limitations for Battery No. 3 Combustion Stack

POLLUTANT	HOURLY** EMISSION LIMIT (lb/hr)	ANNUAL** EMISSION LIMIT (tons/year)[1]
PM	14.47	63.38
PM_{10}	14.47	63.38
$PM_{2.5}$	14.47	63.38
$PM_{condensible}$	2.78	12.17
NO_X	71.15	311.64
CO	40.87	179.02
VOC	1.99	8.72

[1]A year is defined as any consecutive 12-month period.

**NO_X, CO and VOC emissions include combustion stack, soaking, charging, door leaks, lid leaks, offtake leaks, decarbonization

proposed

z. SO_2 emissions combustion stack coke oven battery 3 shall not exceed the limitations in Table V-A-3a below: [§2105.21.h; SO_2 SIP IP 0052-I017, Condition V.A.1.b]

TABLE V-A-3a – SO_2 Emission Limitations for Battery No. 2 Combustion Stack

Process	Thirty-day (30-day) Emission Limit* (lb/hr)	Supplementary 24-hr Limit* (lb/hr)[1]	Annual Emission Limit** (tons/year)
Battery 3 Underfiring	10.57	13.47	46.30

*Limits are based on a rolling 30-day average of 24-hour (calendar day) averages, with an additional restriction of no more than 3 consecutive days above a supplementary 24-hour limit. These limits are based on ACHD's SO_2 State Implementation Plan (SIP) Permit Revision and USEPA SO_2 Guidance dated September 14, 2017.

**Tons/year value is used to demonstrate the expected tons/year from this unit. The value is derived by converting the 30-day rolling average limit lb/hr to an annual tons per year value. These limits are based on ACHD's SO_2 State Implementation Plan (SIP) Permit Revision and USEPA SO_2 Guidance dated September 14, 2017.

2. Testing Requirements:

a. The permittee shall have PM, $PM_{2.5}$ and PM_{10} particulate emissions stack tests performed on each combustion stack of Coke Batteries 1, 2 and 3 at least once every two (2) years to demonstrate compliance with the mass emission standard in Condition V.A.1.q above. Particulate emission tests shall be conducted according to the methodology specified in 40 CFR 60, Appendix A, Methods 1 through 5, 201A and 202 (or other method specified). The permittee shall submit a stack test protocol to the Department for approval at least 45 days prior to the test dates. During each stack test performed, simultaneous visible emission evaluations shall be conducted according to the methodology specified in 40 CFR 60, Appendix A, Method 9, except for the provisions of Section 2.5 of Method 9. [§2103.12.h.1; §2108.02.e; Second Consent Decree 6/24/93]

b. The permittee shall have sulfur dioxide (SO_2) emissions stack tests performed on each combustion stack of Coke Batteries 1, 2 and 3 at least once every two years to demonstrate compliance with the mass emission limitations for each combustion stack in Conditions V.A.1.v, V.A.1.x, V.A.1.z above. SO_2 emission tests shall be conducted according to Method 6, 6A, 6B, or 6C specified in 40 CFR 60, Appendix A. The permittee shall submit a stack test protocol to the Department for approval at least 45 days prior to the test dates. [§2108.02.b & e; SO_2 SIP IP 0052-I017, Condition V.A.2.a]

c. Emissions of SO_2 shall be determined by converting the H_2S grain loading of the fuel burned and the fuel flow rate to pounds per hour to determine compliance with the emission limitations of conditions V.A.1.v, V.A.1.x, and V.A.1.z above. [§2103.12.h.1; SO_2 SIP IP 0052-I017, Condition V.A.2.b]

d. The permittee shall perform emissions testing for NO_X, CO and VOC on each combustion stack of Coke Batteries 1, 2 and 3 to demonstrate compliance with the mass emission limitation for each combustion stack in Conditions V.A.1.u, V.A.1.w, V.A.1.y above. Testing for NO_X, CO and VOC shall be conducted at least once every two years in accordance with approved EPA Methods (Method 7, 7A, 7B, 7C, 7D or 7E, Method 10, 10A or 10B and Method 18) in Appendix A of 40 CFR Part 60, Article XXI §2108.02, and as approved by the Department. The permittee shall submit a stack test protocol to the Department for approval at least 45 days prior to the test dates. [§2105.06.b.4.B; §2103.12.h.1; §2108.02.b; §2108.02.e.]

e. The permittee shall comply with the provisions of the applicable performance tests and procedure

proposed

requirements in Site level Condition IV.30 above. [§63.309; §2103.12.h.1]

f. The Department reserves the right to require additional emissions testing sufficient to assure compliance with the terms and conditions of this permit. Such testing shall be performed in accordance with Site Level Condition IV.14 above and Article XXI §2108.02. [§2103.12.h.1]

3. Monitoring Requirements:

a. The permittee shall:

1) Inspect the collecting main for leaks at least once daily according to the procedures in Method 303 in 40 CFR Part 63, Appendix A; [§2103.12.h.6.; §2103.12.i; §63.308(a)]
2) Record the time and date a leak in the collecting main is first observed, the time and date the leak is temporarily sealed, and the time and date of repair; [§2103.12.h.6.; §63.308(b)]
3) Temporarily seal any leak in the collecting main as soon as possible after detection, but no later than 4 hours after detection of the leak; and [§2103.12.h.6.; §2103.12.i; §63.308(c)]
4) Initiate a collecting main repair as expeditiously as possible, but no later than 5 calendar days after initial detection of the leak. The repair shall be completed within 15 calendar days after initial detection of the leak unless an alternative schedule is approved by the Department. [§2103.12.h.6; §2103.12.i; §63.308(d)]

b. The permittee shall prepare and operate at all times according to a written operation and maintenance plan for the general operation and maintenance of all coke oven batteries. Each plan must address, at a minimum, the following elements: [§2103.12.h.6; §2103.12.i; §63.7300(b)]

1) Frequency and method of recording underfiring gas parameters.
2) Frequency and method of recording battery operating temperature, including measurement of individual flue and cross-wall temperatures.
3) Procedures to prevent pushing an oven before it is fully coked.
4) Procedures to prevent overcharging and undercharging of ovens, including measurement of coal moisture, coal bulk density, and procedures for determining volume of coal charged.
5) Frequency and procedures for inspecting flues, burners, and nozzles.
6) Schedule and procedures for the daily washing of baffles

c. The permittee shall monitor at all times the opacity of emissions exiting each coke oven battery stack using a COMS according to the requirements in condition V.A.3.f below. [§2103.12.h.6; §2103.12.i; §63.7330(e)]

d. The permittee shall conduct a performance evaluation of each CPMS in accordance with the site-specific monitoring plan. [§2103.12.h.6; §2103.12.i; §63.7331(c)]

e. The permittee shall operate and maintain each CPMS in continuous operation according to the site-specific monitoring plan. [§2103.12.h.6; §2103.12.i; §63.7331(d)]

f. For each coke oven battery, the permittee shall install, operate, and maintain a COMS to measure and record the opacity of emissions exiting each stack according to the requirements in Conditions V.A.3.f.1) through V.A.3.f.5) below: [§2103.12.h.6; §2103.12.i; §63.7331(j)]

1) Install, operate, and maintain each COMS according to the requirements in §63.8(e) and Performance Specification 1 in 40 CFR Part 60, Appendix B. Identify periods when the COMS

proposed

is out-of-control, including any periods that the COMS fails to pass a daily calibration drift assessment, quarterly performance audit, or annual zero alignment audit.

2) Conduct a performance evaluation of each COMS according to the requirements in §63.8 and Performance Specification 1 in Appendix B to 40 CFR Part 60;
3) Develop and implement a quality control program for operating and maintaining each COMS according to the requirements in §63.8(d). At minimum, the quality control program must include a daily calibration drift assessment, quarterly performance audit, and an annual zero alignment audit of each COMS;
4) Each COMS must complete a minimum of one cycle of sampling and analyzing for each successive 10-second period and one cycle of data recording for each successive 6-minute period. The permittee must reduce the COMS data as specified in §63.8(g)(2).
5) Determine and record the hourly and daily (24-hour) average opacity according to the procedures in §63.7324(b) using all the 6-minute averages collected for periods during which the COMS is not out-of-control.

g. Except for monitor malfunctions, associated repairs, and required quality assurance or control activities (including as applicable, calibration checks and required zero and span adjustments), the permittee shall monitor continuously (or collect data at all required intervals) at all times the affected source is operating. [§2103.12.h.6; §2103.12.i; §63.7332(a)]

h. The permittee shall not use data recorded during monitoring malfunctions, associated repairs, and required quality assurance or control activities in data averages and calculations used to report emission or operating levels, or in fulfilling a minimum data availability requirement, if applicable. The permittee shall use all the data collected during all other periods in assessing compliance. A monitoring malfunction is any sudden, infrequent, not reasonably preventable failure of the monitor to provide valid data. Monitoring failures that are caused in part by poor maintenance or careless operation are not malfunctions. [§2103.12.h.6; §2103.12.i; §63.7332(b)]

i. The permittee shall demonstrate continuous compliance for each by-product coke oven battery subject to the opacity limit for stacks in Condition V.A.1.s.1) and V.A.1.s.2) above by meeting the requirements in Conditions V.A.3.i.1) and V.A.3.i.2) below: [§2103.12.h.6; §2103.12.i; §63.7333(e)]

1) Maintaining the daily average opacity at or below 15 percent for a battery on a normal coking cycle or 20 percent for a battery on battery-wide extended coking; and
2) Operating and maintaining a COMS and collecting and reducing the COMS data according to Condition V.A.3.f above

4. Record Keeping Requirements:

a. The permittee shall maintain files of all required information in a permanent form suitable for inspection at an onsite location for at least 1 year and must thereafter be accessible within 3 working days to the Department for a period of five years. Copies of the work practice plan developed under Condition IV.29 above and the startup, shutdown, and malfunction plan developed under V.A.6.c below shall be kept onsite at all times. The permittee shall maintain the following information: [§2103.12.h.6; §63.311(f); §2103.12.j]

1) A copy of the work practice plan required by Condition IV.29 above and any revision to the plan;
2) If the permittee is required under Condition IV.29.c above to implement the provisions of a work practice plan for a particular emission point, the following records regarding the

proposed

implementation of plan requirements for that emission point during the implementation period;

A. Copies of all written and audiovisual materials used in the training, the dates of each class, the names of the participants in each class, and documentation that all appropriate personnel have successfully completed the training required under Condition IV.29.b.1) above;
B. The records required to be maintained by the plan provisions implementing Condition IV.29.b.7) above;
C. Records resulting from audits of the effectiveness of the work practice program for the particular emission point, as required under Conditions IV.29.b.3)A, IV.29.b.4)A, IV.29.b.5)A or IV.29.b.6)A above; and
D. If the plan provisions for coke oven doors must be implemented, records of the inventory of doors and jambs as required under Condition IV.29.b.3)F above; and

3) The design drawings and engineering specifications for the bypass/bleeder stack flare system or approved alternative control device or system as required under Conditions V.A.1.a through V.A.1.e above.
4) Records specified in Condition V.A.6.g below regarding the basis of each malfunction notification.

b. The permittee shall keep the following records: [§2103.12.j; §63.7342(a)]

1) A copy of each notification and report that was submitted to comply with this subpart, including all documentation supporting any initial notification or notification of compliance status that was submitted, according to the requirements in §63.10(b)(2)(xiv).
2) The records in §63.6(e)(3)(iii) through (v) related to startup, shutdown, and malfunction.
3) Records of performance tests, performance evaluations, and opacity observations as required in §63.10(b)(2)(viii).

c. For each COMS or CEMS, the permittee shall keep the following records. [§2103.12.j; §63.7342(b)]

1) Records described in §63.10(b)(2)(vi) through (xi).
2) Monitoring data for COMS during a performance evaluation as required in §63.6(h)(7)(i) and (ii).
3) Previous (that is, superceded) versions of the performance evaluation plan as required in §63.8(d)(3).
4) Records of the date and time that each deviation started and stopped and whether the deviation occurred during a period of startup, shutdown, or malfunction or during another period.

d. The permittee shall keep the records in §63.6(h)(6) for visual observations. [§2103.12.j; §63.7342(c)]

e. As specified in §63.10(b)(1), the permittee shall keep each record for 5 years following the date of each occurrence, measurement, maintenance, corrective action, report, or record. [§2103.12.j; §63.7343(b)]

f. The permittee shall keep each record on site for at least 2 years after the date of each occurrence, measurement, maintenance, corrective action, report, or record, according to §63.10(b)(1). The permittee can keep the records offsite for the remaining 3 years. [§2103.12.h.6; §2103.12.j; §63.7343(c)]

proposed

g. For each by-product coke oven battery, the permittee must demonstrate continuous compliance with the operation and maintenance requirements in V.A.3.b above by adhering at all times to the plan requirements and recording all information needed to document conformance. [§2103.12.j; §63.7335(a)]

h. The permittee shall maintain a current copy of the operation and maintenance plans required in V.A.3.b or §63.7300(b) onsite and available for inspection upon request. The plans shall be kept for the life of the affected source or until the affected source is no longer subject to the requirements of 40 CFR Part 63, Subpart CCCCC. [§2103.12.j; §63.7335(d)]

i. The permittee must demonstrate continuous compliance to the work practice standard for soaking in V.A.6.k below, by maintaining records that document conformance with requirements in V.A.6.k.1) through V.A.6.k.5) below. [§2103.12.j; §63.7334(d)]

5. Reporting Requirements:

a. No later than twenty (20) days after the end of each month, a written report of a summary of the following during each such month shall be submitted to the Department: [§2103.12.h.6; §2103.12.k; §2109.03; Enforcement Order 202. E, 3/28/90]

1) For all coke batteries combined, the daily average for the month of:
   A. Coal charged, in tons;
   B. Coke produced, in tons;
   C. Total coke oven gas produced; in MMCF;
   D. Quench water used, in gallons;
   E. Elemental sulfur produced, in tons;
   F. Sulfur content of coal, in percent; and
   G. Sulfur content of coke, in percent.

2) For all periods during which contaminated quench water was used:
   A. The batteries affected;
   B. The starting and ending dates and times;
   C. The total time of each period, and total for the month, to the nearest tenth of an hour;
   D. The corresponding Department Breakdown Number;
   E. The average flow rates of contaminated water to both the quench towers and the water treatment plant during the period, each in gallons per minute; and
   F. The reason(s) or cause(s) for each period.

b. The permittee shall include the following information in the semiannual compliance certification: [§2103.12.k; §63.311(d)]

1) Certification, signed by the permittee, that no coke oven gas was vented, except through the bypass/bleeder stack flare system during the reporting period or that a venting report has been submitted according to the requirements in V.A.5.c below.
2) Certification, signed by the permittee, that a startup, shutdown, or malfunction event did not occur for a coke oven battery during the reporting period or that a startup, shutdown, and malfunction event did occur and a report was submitted according to the requirements in V.A.6.f below; and
3) Certification, signed by the permittee, that work practices were implemented if applicable under Condition IV.29 above.

c. The permittee shall report any venting of coke oven gas through a bypass/bleeder stack that was

proposed

not vented through the bypass/bleeder stack flare system to the Department as soon as practicable but no later than 24 hours after the beginning of the event. A written report shall be submitted within 30 days of the event and shall include a description of the event and, if applicable, a copy of the notification for a hazardous substance release required pursuant to 40 CFR 302.6. [§2103.12.k; §63.311(e)]

d. In order for the provisions of §63.310(i) to apply with respect to the observation (or set of observations) for a particular day, notification of a startup, shutdown, or a malfunction shall be made by the permittee as follows: [§2103.12.k; §63.310(d)]

1) If practicable, to the certified observer if the observer is at the facility during the occurrence; or
2) To the Department, in writing, within 24 hours of the occurrence first being documented by a company employee, and if the notification was not made, an explanation of why no such notification was made.

e. Within 14 days of the notification startup, shutdown, or a malfunction, the permittee shall submit a written report to the Department that: [§2103.12.k; §63.310(e)]

1) Describes the time and circumstances of the startup, shutdown, or malfunction; and
2) Describes actions taken that might be considered inconsistent with the startup, shutdown, or malfunction plan.

f. The permittee shall submit a written quarterly report within thirty (30) days after the close of each calendar quarter to the Department. The quarterly reports shall contain, at minimum the list of every clock hour in the calendar quarter that compliance is not achieved for Article XXI opacity limits applicable to Batteries 1-3 combustion stacks as measured by the combustion stacks continuous opacity monitor (COM). U.S. Steel shall indicate the date, time, root cause, and ovens that are believed to have contributed to the exceedance. [§2103.12.k]

g. The permittee shall submit to the Department a Semi-Annual Deviation Report for all deviations from Article XXI §2105.21(e)(4) and (e)(5) for Batteries 1-3. [§2103.12.k]

h. The permittee shall report each instance in which each emission limitation in Conditions V.A.1.s and V.A.1.t was not met. This includes periods of startup, shutdown, and malfunction. The permittee shall also report each instance in which the permittee did not meet each work practice standard or operation and maintenance requirement in Conditions V.A.6.k, V.A.6.l and V.A.6.m. These instances are deviations from the emission limitations (including operating limits), work practice standards, and operation and maintenance requirements of 40 CFR Part 63, Subpart CCCCC. These deviations must be reported according to the requirements in V.A.5.k through V.A.5.o below. [§2103.12.k; §63.7336(a)]

i. During periods of startup, shutdown, and malfunction, the permittee must operate in accordance with the startup, shutdown, and malfunction plan. [§2103.12.k; §63.7336(b)]

1) Consistent with §63.6(e) and 63.7(e)(1), deviations that occur during a period of startup, shutdown, or malfunction are not violations if the permittee demonstrates to the Department's satisfaction that the permittee was operating in accordance with the startup, shutdown, and malfunction plan.
2) The Department will determine whether deviations that occur during a period of startup,

proposed

shutdown, or malfunction are violations, according to the provisions in §63.6(e).

j. The permittee shall submit all of the notifications in §63.6(h)(4) and (5), 63.7(b) and (c), 63.8(e) and (f)(4), and 63.9(b) through (h) that apply by the specified dates. [§2103.12.k; §63.7340(a)]

k. The permittee must submit quarterly compliance reports for battery stacks in accordance with General Condition III.15 above. All quarterly compliance reports for battery stacks must be postmarked or delivered no later than one calendar month following the end of the quarterly reporting period. [§2103.12.h.6; §2103.12.k; §63.7341(a)]

l. Each quarterly compliance report must provide information on compliance with the emission limitations for battery stacks in V.A.1.s.1) above. The reports must include the information in Conditions V.A.5.m.1) through V.A.5.m.3) below, and as applicable, Conditions V.A.5.m.4) through V.A.5.m.8) below. [§2103.12.k; §63.7341(b)]

m. Each semiannual compliance report must provide information on compliance with the emission limitations, work practice standards, and operation and maintenance requirements for all affected sources except battery stacks. The reports must include the information V.A.5.m.1) through V.A.5.m.3), and as applicable, Conditions V.A.5.m.4) through V.A.5.m.8) below. [§2103.12.k; §63.7341(c)]

1) Company name and address.
2) Statement by a responsible official, with the official's name, title, and signature, certifying the truth, accuracy, and completeness of the content of the report.
3) Date of report and beginning and ending dates of the reporting period.
4) If there was a startup, shutdown, or malfunction during the reporting period and the permittee took actions consistent with the startup, shutdown, and malfunction plan, the compliance report must include the information in §63.10(d)(5)(i).
5) If there were no deviations from the continuous compliance requirements in V.A.3.i for battery stacks, a statement that there were no deviations from the emission limitations during the reporting period.
6) If there were no periods during which a continuous monitoring system (including COMS, continuous emission monitoring system (CEMS), or CPMS) was out-of-control as specified in §63.8(c)(7), a statement that there were no periods during which a continuous monitoring system was out-of-control during the reporting period.
7) For each deviation from an emission limitation in 40 CFR 63, Subpart CCCCC and for each deviation from the requirements for work practice standards in this 40 CFR Part 63, Subpart CCCCC that occurs at an affected source where the permittee is not using a continuous monitoring system (including a COMS, CEMS, or CPMS) to comply with the emission limitations in this subpart, the compliance report must contain the information in Conditions V.A.5.m.4), V.A.5.m.7)A and V.A.5.m.7)B below. This includes periods of startup, shutdown, and malfunction.

   A. The total operating time of each affected source during the reporting period.
   B. Information on the number, duration, and cause of deviations (including unknown cause, if applicable) as applicable and the corrective action taken.

8) For each deviation from an emission limitation occurring at an affected source where the permittee is using a continuous monitoring system (including COMS, CEMS, or CPMS) to comply with the emission limitation 40 CFR 63, Subpart CCCCC, the permittee must include the information in Conditions V.A.5.m.4), V.A.5.m.8)A through V.A.5.m.8)L below. This

proposed

includes periods of startup, shutdown, and malfunction.

A. The date and time that each malfunction started and stopped.
B. The date and time that each continuous monitoring system (including COMS, CEMS, or CPMS) was inoperative, except for zero (low-level) and high-level checks.
C. The date, time, and duration that each continuous monitoring system (including COMS, CEMS, or CPMS) was out-of-control, including the information in §63.8(c)(8).
D. The date and time that each deviation started and stopped, and whether each deviation occurred during a period of startup, shutdown, or malfunction or during another period.
E. A summary of the total duration of the deviation during the reporting period and the total duration as a percent of the total source operating time during that reporting period.
F. A breakdown of the total duration of the deviations during the reporting period into those that are due to startup, shutdown, control equipment problems, process problems, other known causes, and other unknown causes.
G. A summary of the total duration of continuous monitoring system downtime during the reporting period and the total duration of continuous monitoring system downtime as a percent of the total source operating time during the reporting period.
H. An identification of each HAP that was monitored at the affected source.
I. A brief description of the process units.
J. A brief description of the continuous monitoring system.
K. The date of the latest continuous monitoring system certification or audit.
L. A description of any changes in continuous monitoring systems, processes, or controls since the last reporting period.

n. If the permittee had a startup, shutdown, or malfunction during the semiannual reporting period that was not consistent with the startup, shutdown, and malfunction plan, the permittee must submit an immediate startup, shutdown, and malfunction report according to the requirements in §63.10(d)(5)(ii). [§2103.12.k; §63.7341(d)]

o. If the permittee submits a compliance report for an affected source along with, or as part of, the semiannual monitoring report required by 40 CFR 70.6(a)(3)(iii)(A), and the compliance report includes all the required information concerning deviations from any emission limitation or work practice standard in 40 CFR Part 63, Subpart CCCCC, submission of the compliance report satisfies any obligation to report the same deviations in the semiannual monitoring report. However, submission of a compliance report does not otherwise affect any obligation the permittee may have to report deviations from permit requirements to the Department. [§2103.12.k; §63.7341(e)]

6. Work Practice Standards:

a. At no time shall the permittee operate Coke Oven Batteries 1, 2, and 3 unless they are properly operated and maintained according to good engineering and air pollution control practices by performing regular maintenance with the exception of actions to mitigate emergency conditions. [RACT IP 0052-I020b, V.D.1.b; RACT Order No. 234, Condition 1.1; 25 Pa Code §129.99; §2103.12.a.2.B]

b. The permittee shall comply with the provisions of applicable workpractice requirements in Site Level Condition IV.29 above. [§2103.12.h.6; §63.306(a)]

c. The permittee shall develop and implement according to Condition V.A.6.d below, a written startup, shutdown, and malfunction plan that describes procedures for operating the battery,

proposed

including associated air pollution control equipment, during a period of a startup, shutdown, or malfunction in a manner consistent with good air pollution control practices for minimizing emissions, and procedures for correcting malfunctioning process and air pollution control equipment as quickly as practicable. All the provisions of Site Level Condition IV.9 above remain applicable and are not superceded by operating in accordance with the startup, shutdown, and malfunction plan. [§2103.12.h.6; §63.310(b)]

d. During a period of startup, shutdown, or malfunction the permittee shall: [§2103.12.h.6; §63.310(c)]

1) Operate the battery (including associated air pollution control equipment) in accordance with the procedure specified in the startup, shutdown, and malfunction plan; and
2) Correct malfunctions as soon as practicable after their occurrence, in accordance with the plan.

e. In order for the provisions of Condition V.A.6.j below to apply with respect to the observation (or set of observations) for a particular day, notification of a startup, shutdown, or a malfunction shall be made by the permittee: [§2103.12.h.6; §63.310(d)]

1) If practicable, to the certified observer if the observer is at the facility during the occurrence; or
2) To the Department, in writing, within 24 hours of the occurrence first being documented by a company employee, and if the notification under Condition V.A.6.e.1) above was not made, an explanation of why no such notification was made.

f. Within 14 days of the notification made under Condition V.A.6.e above, or after a startup or shutdown, the permittee shall submit a written report to the Department that: [§2103.12.h.6; §63.310(e)]

1) Describes the time and circumstances of the startup, shutdown, or malfunction; and
2) Describes actions taken that might be considered inconsistent with the startup, shutdown, or malfunction plan.

g. The permittee shall maintain a record of internal reports which form the basis of each malfunction notification under Condition V.A.6.e above. [§2103.12.h.6; §63.310(f)]

h. To satisfy the requirements of §63.310 to develop a startup, shutdown, and malfunction plan, the permittee may use the standard operating procedures manual for the battery, provided the manual meets all the requirements §63.310 and is made available for inspection at reasonable times when requested by the Department. [§2103.12.h.6; §63.310(g)]

i. The Department may require reasonable revisions to a startup, shutdown, and malfunction plan, if the Department finds that the plan: [§2103.12.h.6; §63.310(h)]

1) Does not address a startup, shutdown, or malfunction event that has occurred;
2) Fails to provide for the operation of the source (including associated air pollution control equipment) during a startup, shutdown, or malfunction event in a manner consistent with good air pollution control practices for minimizing emissions; or
3) Does not provide adequate procedures for correcting malfunctioning process and/or air pollution control equipment as quickly as practicable.

j. If the permittee demonstrates to the satisfaction of the Department that a startup, shutdown, or

proposed

malfunction has occurred, then an observation occurring during such startup, shutdown, or malfunction shall not: [§2103.12.h.6; §63.310(i)]

1) Constitute a violation of relevant requirements of 40 CFR 63, Subpart L;
2) Be used in any compliance determination under§63.309; or
3) Be considered for purposes of Condition IV.29 above, until the Department has resolved the claim that a startup, shutdown, or malfunction has occurred. If the Department determines that a startup, shutdown, or malfunction has not occurred, such observations may be used for purposes of Conditions IV.29 above, regardless of whether the permittee further contests such determination. The permittee's receipt of written notification from the Department that a startup, shutdown, or malfunction has not occurred will serve, where applicable under Conditions IV.29 above, as written notification from the certified observer that an exceedance has occurred.

k. The permittee shall prepare and operate at all times according to a written work practice plan for soaking. Each plan must include measures and procedures to: [§2103.12.h.6; §63.7294(a)]

1) Train topside workers to identify soaking emissions that require corrective actions.
2) Damper the oven off the collecting main prior to opening the standpipe cap.
3) Determine the cause of soaking emissions that do not ignite automatically, including emissions that result from raw coke oven gas leaking from the collecting main through the damper, and emissions that result from incomplete coking.
4) If soaking emissions are caused by leaks from the collecting main, take corrective actions to eliminate the soaking emissions. Corrective actions may include, but are not limited to, reseating the damper, cleaning the flushing liquor piping, using aspiration, putting the oven back on the collecting main, or igniting the emissions.
5) If soaking emissions are not caused by leaks from the collecting main, notify a designated responsible party. The responsible party must determine whether the soaking emissions are due to incomplete coking. If incomplete coking is the cause of the soaking emissions, the permittee must put the oven back on the collecting main until it is completely coked or the permittee must ignite the emissions.

l. As provided in §63.6(g), the permittee may request to use an alternative to the work practice standard for soaking in Condition V.A.6.k above. [§2103.12.h.6; §63.7294(b)]

m. The permittee shall be in compliance with the emission limitations, work practice standards, and operation and maintenance requirements of 40 CFR 63, Subpart CCCCC at all times, except during periods of startup, shutdown, and malfunction as defined in §63.2. [§2103.12.h.6; §63.7310(a)]

7. Additional Requirements:

The definitions in 40 CFR 63.7352 are hereby incorporated into this permit by reference.

PERMIT SHIELD IN EFFECT

proposed

B. Battery No. 1, 2 and 3 Pushing Emission Control (PEC) System: P050

Process Description: Moveable hood with stationary baghouse
Facility ID: P050
Max. Design Rate: 125,000 acfm @ 125ºF
Capacity: 125,000 acfm @ 125ºF
Control Device: Pulse-jet baghouse

1. Restrictions:

a. The permittee shall not operate, or allow to be operated, Battery 1 or Battery 2 or Battery 3 coke ovens unless there is installed a pushing emission control system baghouse which is designed to reduce fugitive emissions from pushing to the minimum attainable through the use of BACT, nor shall the permittee operate, or allow to be operated Battery 1 or Battery 2 or Battery 3 coke ovens in such manner that: [§2105.21.e, IP 0052-I006, VI.1.a.1]

1) At any time, the particulate mass emission rate from the pushing emission control system device, for Batteries 1, 2, & 3 exceeds a rate determined by an outlet concentration of 0.010 grains per dry standard cubic foot: [§2105.21.e.2.A, B, and C; IP 0052-I006]

2) Fugitive pushing emissions or emissions from the pushing emission control system device outlet equal or exceed an opacity of 20% at any time, except if the Department determines in writing, upon written application from the person responsible for the coke ovens setting forth all information needed to make such determination, that such emissions are of only minor significance with respect to causing air pollution and do not prevent or interfere with the attainment or maintenance of any ambient air quality standard (any such determination shall be submitted as a proposed revision to Allegheny County's portion of the SIP). [§2105.21.e.4, IP 0052-I006]

b. The permittee shall not operate, or allow to be operated at any time, coke oven batteries in such manner that the hot coke fails to be held under the hood of the pushing emission control device for at least 67 seconds immediately after the pusher ram begins to move and the damper to the PEC device is opened or for at least 15 seconds immediately following the fall of the last of the coke into the hot car, whichever is longer. This provision shall only be effective during the period from 30 days following the issuance of written notice by the Department to the permittee of such battery that EPA has required the implementation of the contingency measures under the portion of the PM-10 SIP for the Liberty Borough/Clairton area, until issuance of a written notice by the Department that such measures are no longer required. [§2105.21.e.6]

c. The permittee shall not operate, or allow to be operated Battery 1 or Battery 2 or Battery 3, unless the Battery 1, 2, & 3 PEC System baghouse is properly installed, operated and maintained according to the following conditions, at all times: [§2105.03; IP 0052-I006, VI.b]

1) Emissions due to the pushing of Battery 1, 2, & 3 coke ovens shall be vented through the PEC System baghouse dust collector.
2) The baghouse shall be equipped with automatic cleaning controls and instrumentation that shall continuously measure the differential pressure drop across the baghouse to within 5.0% of the measuring span of the device.
3) The normal operating differential pressure drop range across each baghouse module shall be maintained below 10 inches w.c. averaged over the push.

proposed

4) When the pressure drop goes beyond the range specified in Condition V.B.1.c.3) above, cleaning, maintenance and other corrective actions shall be conducted, as necessary, to return the pressure drop to the specified range.

d. The permittee shall not discharge to the atmosphere emissions of particulate matter from a control device applied to pushing emissions from batteries 1, 2 or 3 that exceeds 0.02 pound per ton (lb/ton) of coke. [§2103.12.h.6; §63.7290(a)]

e. For each PEC System the permittee shall: [§2103.12.h.6; §63.7290(b)(3)]

1) Maintain the minimum daily average fan motor amperes of 207 or above the minimum level established during the most recent performance test; or
2) Maintain the daily average volumetric flow rate at the inlet of the control device at or above the minimum level established during the initial performance test.

f. For each control device applied to pushing emissions and subject to the emission limit in V.B.1.d above, the permittee shall demonstrate continuous compliance by meeting the requirements in Conditions V.B.1.f.1) and 2) below: [§2103.12.h.6; §63.7333 (a)]

1) Maintaining emissions of particulate matter at or below 0.02 pound per ton (lb/ton) of coke; and
2) Conducting subsequent performance tests to demonstrate continuous compliance no less frequently than once every two years.

g. Emissions from Battery 1, 2, & 3 PEC System baghouse shall not exceed the limits listed in Table V-B-1 at any time: [§2105.03; IP 0052-I006; SO_2 SIP IP 0052-I017, V.B.1.c]

TABLE V-B-1 - Emission Limitations for Batteries 1, 2 & 3 PEC System Baghouse

POLLUTANT	GR/DSCF	HOURLY EMISSION LIMIT (lb/hr)	ANNUAL EMISSION LIMIT (tons/year)*
Particulate Matter	0.010	1.98	8.68
PM_{10}	0.010	1.98	8.68
SO_2**		7.10	31.10

*A year is defined as any consecutive 12-month period.
**SO_2 limit is based on SO_2 SIP IP 0052-I017. The limits are combined for all the three batteries.

proposed

h. SO_2 emissions from the batteries hot car shall not exceed the limitations in Table V-B-2 below: [§2105.21.h.4; SO_2 SIP IP 0052-I017, Condition V.B.1.c]

TABLE V-B-2 – SO_2 Emission Limitations for Batteries 1-3 Hot Car

POLLUTANT**	HOURLY EMISSION LIMIT (lb/hr)	ANNUAL EMISSION LIMIT (tons/year)*
SO_2	10.64	46.60

*A year is defined as any consecutive 12-month period
**These limits are based on ACHD's SO_2 State Implementation Plan (SIP) Permit Revision and USEPA SO_2 Guidance dated September 14, 2017.

2. Testing Requirements:

a. The permittee shall have baghouse emission stack tests conducted for PM, PM_{10} and $PM_{2.5}$ at least once every two years using EPA Methods No.1 through No.5, 201A and 202 (or other method specified) and performed according to Site Level Condition IV.14 and Article XXI §2108.02. [§2108.02; §2103.12.h.6; IP 0052-I006; §63.7321; SO_2 SIP IP 0052-I017, V.B.2.a]

b. Visible emissions observations of the baghouse stack exhaust and fugitive pushing emissions shall be conducted at least once every two years, as specified in Section 109 of the Department's source testing manual, and be done simultaneously with the baghouse stack tests. [§2108.02, IP 0052-I006]

c. The permittee shall conduct each performance test according to the requirements in Condition V.B.2.d below. [§2103.12.h.6; §63.7322(a)]

d. To determine compliance with the process weighted mass rate of particulate matter (lb/ton of coke) in Condition V.B.1.d above, use the following test methods and procedures: [§2103.12.h.6; §63.7322(b)]

1) Determine the concentration of particulate matter according to the following test methods in Appendix A to 40 CFR Part 60. [§2103.12.h.6; §63.7322(b)(1)]

A. Method 1 to select sampling port locations and the number of traverse points. Sampling sites must be located at the outlet of the control device and prior to any releases to the atmosphere.
B. Method 2, 2F, or 2G to determine the volumetric flow rate of the stack gas.
C. Method 3, 3A, or 3B to determine the dry molecular weight of the stack gas.
D. Method 4 to determine the moisture content of the stack gas.
E. Method 5 or 5D, as applicable, to determine the concentration of front half particulate matter in the stack gas.

2) During each particulate matter test run, sample only during periods of actual pushing when the capture system fan and control device are engaged. Collect a minimum sample volume of 50 dry standard cubic feet of gas during each test run. Three valid test runs are needed to comprise a performance test. Each run must start at the beginning of a push and finish at the end of a push (i.e., sample for an integral number of pushes). [§2103.12.h.6; §63.7322(b)(2)]

proposed

3) Determine the total combined weight in tons of coke pushed during the duration of each test run according to the procedures in the source test plan for calculating coke yield from the quantity of coal charged to an individual oven. [§2103.12.h.6; §63.7322(b)(3)]
4) Compute the process-weighted mass emissions (E_p) for each test run using the following equation: [§2103.12.h.6; §63.7322(b)(4)]

$$Ep = \frac{C \times Q \times T}{P \times K}$$

Where:

E_p = Process weighted mass emissions of particulate matter, lb/ton;
C = Concentration of particulate matter, gr/dscf;
Q = Volumetric flow rate of stack gas, dscf/hr;
T = Total time during a run that a sample is withdrawn from the stack during pushing, hr;
P = Total amount of coke pushed during the test run, tons; and
K = Conversion factor, 7,000 gr/lb.

e. For each capture system applied to pushing emissions, the permittee shall establish a site-specific operating limit for the fan motor amperes or volumetric flow rate according to the procedures in Condition V.B.2.e.1) or V.B.2.e.2) below: [§2103.12.h.6; §63.7323(c)]

1) If the operating limit in V.B.1.e.1) above for fan motor amperes is elected, the permittee shall measure and record the fan motor amperes during each push sampled for each particulate matter test run. The operating limit is the lowest fan motor amperes recorded during any of the three runs that meet the emission limit.
2) If the operating limit in V.B.1.e.2) above for volumetric flow rate is elected, the permittee shall measure and record the total volumetric flow rate at the inlet of the control device during each push sampled for each particulate matter test run. The operating limit is the lowest volumetric flow rate recorded during any of the three runs that meet the emission limit.

f. The permittee may change the operating limit for a capture system if the requirements in Conditions V.B.2.f.1) through V.B.2.f.3) below are met: [§2103.12.h.6; §63.7323(e)]

1) Submit a written notification to the Department of the request to conduct a new performance test to revise the operating limit.
2) Conduct a performance test to demonstrate that emissions of particulate matter from the control device do not exceed the applicable limit in §63.7290(a).
3) Establish revised operating limits according to the applicable procedures in Condition V.B.2.e above.

g. The Department reserves the right to require additional emissions testing sufficient to assure compliance with the terms and conditions of this permit. Such testing shall be performed in accordance with Site Level Condition IV.14 above and Article XXI §2108.02. [§2103.12.h.1]

3. Monitoring Requirements:

a. The permittee shall continuously monitor the differential pressure drop across each baghouse module. [§2103.12.h.1; §2103.12.i; IP 0052-I006]

proposed

b. The permittee shall record the number of pushes per day and the amount of coal charged daily for each Battery Unit. [§2103.12.i; SO_2 SIP IP 0052-I017, V.B.3.b]

c. The permittee shall inspect the PEC System baghouse for Batteries 1, 2 and 3, weekly, to insure compliance with Condition V.B.1.c above. [§2103.12.i; IP 0052-I006]

d. The permittee shall meet each of the following requirements for each coke oven battery. [§63.7291(a)]

1) Observe and record the opacity of fugitive pushing emissions from each oven at least once every 90 days. If an oven cannot be observed during a 90-day period due to circumstances that were not reasonably avoidable, the permittee must observe the opacity of the first push of that oven following the close of the 90-day period that is capable of being observed in accordance with the procedures in §63.7334(a), and must document why the oven was not observed within a 90-day period. All opacity observations of fugitive pushing emissions for batteries with vertical flues must be made using the procedures in §63.7334(a).

2) Observe and record the opacity of fugitive pushing emissions for at least four consecutive pushes per battery each day. Exclude any push during which the observer's view is obstructed or obscured by interferences and observe the next available push to complete the set of four pushes. If necessary due to circumstances that were not reasonably avoidable, the permittee may observe fewer than four consecutive pushes in a day; however, the permittee must observe and record as many consecutive pushes as possible and document why four consecutive pushes could not be observed. The permittee may observe and record one or more non-consecutive pushes in addition to any consecutive pushes observed in a day.

3) Do not alter the pushing schedule to change the sequence of consecutive pushes to be observed on any day. Keep records indicating the legitimate operational reason for any change in the pushing schedule which results in a change in the sequence of consecutive pushes observed on any day.

4) If the average opacity for any individual push exceeds 30 percent opacity for any short battery or 35 percent opacity for any tall battery, the permittee must take corrective action and/or increase coking time for that oven. The permittee must complete corrective action or increase coking time within either 10 calendar days or the number of days determined using the following equation, whichever is greater:

$$X = 0.55 \times Y$$

Where:
X = Number of calendar days allowed to complete corrective action or increase coking time; and
Y = Current coking time for the oven, hours.

For the purpose of determining the number of calendar days allowed under this equation day one is the first day following the day the permittee observed an opacity in excess of 30 percent for any short battery or 35 percent for any tall battery. Any fraction produced by this equation must be counted as a whole day. Days during which the oven is removed from service are not included in the number of days allowed to complete corrective action.

proposed

5) The permittee shall demonstrate that:

A. The corrective action and/or increased coking time was successful. After a period of time no longer than the number of days allowed in condition V.B.3.d.4) above, observe and record the opacity of the first two pushes for the oven capable of being observed using the procedures in §63.7334(a). The corrective action and/or increased coking time was successful if the average opacity for each of the two pushes is 30 percent or less for a short battery or 35 percent or less for a tall battery. If the corrective action and/or increased coking time was successful, the permittee may return the oven to the 90-day reading rotation described in condition V.B.3.d.1) above. If the average opacity of either push exceeds 30 percent for a short battery or 35 percent for a tall battery, the corrective action and/or increased coking time was unsuccessful, and the permittee must complete additional corrective action and/or increase coking time for that oven within the number of days allowed in condition V.B.3.d.4) above.

B. After implementing any additional corrective action and/or increased coking time required under condition V.B.3.d.5)A above or V.B.3.d.6)B below, the permittee must demonstrate that corrective action and/or increased coking time was successful. After a period of time no longer than the number of days allowed in condition V.B.3.d.4) above, the permittee must observe and record the opacity of the first two pushes for the oven capable of being observed using the procedures in V.B.3.q below or §63.7334(a). The corrective action and/or increased coking time was successful if the average opacity for each of the two pushes is 30 percent or less for a short battery or 35 percent or less for a tall battery. If the corrective action and/or increased coking time was successful, the permittee may return the oven to the 90-day reading rotation described in condition V.B.3.d.1) above. If the average opacity of either push exceeds 30 percent for a short battery or 35 percent for a tall battery, the corrective action and/or increased coking time was unsuccessful, and the permittee must follow the procedures in condition V.B.3.d.5)C below.

C. If the corrective action and/or increased coking time was unsuccessful as described in condition V.B.3.d.5)B above, the permittee must repeat the procedures in condition V.B.3.d.5)B above until the corrective action and/or increased coking time is successful. The permittee must report to the Department as a deviation each unsuccessful attempt at corrective action and/or increased coking time under condition V.B.3.d.5)B above.

6) If at any time the permittee places an oven on increased coking time as a result of fugitive pushing emissions that exceed 30 percent for a short battery or 35 percent for a tall battery, the permittee must keep the oven on the increased coking time until the oven qualifies for decreased coking time using one of the following procedures:

A. To qualify for a decreased coking time for an oven placed on increased coking time in accordance with condition V.B.3.d.4) or V.B.3.d.5) above, the permittee must operate the oven on the decreased coking time. After no more than two coking cycles on the decreased coking time, the permittee must observe and record the opacity of the first two pushes that are capable of being observed using the procedures in §63.7334(a). If the average opacity for each of the two pushes is 30 percent or less for a short battery or 35 percent or less for a tall battery, the permittee may keep the oven on the decreased coking time and return the oven to the 90-day reading rotation described in condition V.B.3.d.1) above. If the average opacity of either push exceeds 30 percent for a short battery or 35 percent for a tall battery, the attempt to qualify for a decreased coking time was unsuccessful. The permittee must

proposed

then return the oven to the previously established increased coking time, or implement other corrective action(s) and/or increased coking time. If the permittee implements other corrective action and/or a coking time that is shorter than the previously established increased coking time, the permittee must follow the procedures in condition V.B.3.d.5)B above to confirm that the corrective action(s) and/or increased coking time was successful.

B. If the attempt to qualify for decreased coking time was unsuccessful as described in condition V.B.3.d.6)A above, the permittee may again attempt to qualify for decreased coking time for the oven. To do this, the permittee must operate the oven on the decreased coking time. After no more than two coking cycles on the decreased coking time, the permittee must observe and record the opacity of the first two pushes that are capable of being observed using the procedures in §63.7334(a). If the average opacity for each of the two pushes is 30 percent or less for a short battery or 35 percent or less for a tall battery, the permittee may keep the oven on the decreased coking time and return the oven to the 90-day reading rotation described in condition V.B.3.d.1) above. If the average opacity of either push exceeds 30 percent for a short battery or 35 percent for a tall battery, the attempt to qualify for a decreased coking time was unsuccessful. The permittee must then return the oven to the previously established increased coking time, or implement other corrective action(s) and/or increased coking time. If the permittee implements other corrective action and/or a coking time that is shorter than the previously established increased coking time, the permittee must follow the procedures in condition V.B.3.d.5)B above to confirm that the corrective action(s) and/or increased coking time was successful.

C. The permittee must report to the Department as a deviation the second and any subsequent consecutive unsuccessful attempts on the same oven to qualify for decreased coking time as described in condition V.B.3.d.6)B above

e. As provided in §63.6(g), the permittee may request to use an alternative to the work practice standards in Condition V.B.3.c above. [§2103.12.h.6; §2103.12.i; §63.7291(b)]

f. The permittee shall prepare and operate at all times according to a written operation and maintenance plan for each capture system and control device applied to pushing emissions from coke battery(s). Each plan must address at a minimum the following elements. [§2103.12.h.6; §2103.12.i; §63.7300(c)]

1) Monthly inspections of the equipment that are important to the performance of the total capture system (e.g., pressure sensors, dampers, and damper switches). This inspection must include observations of the physical appearance of the equipment (e.g., presence of holes in ductwork or hoods, flow constrictions caused by dents or accumulated dust in ductwork, and fan erosion). In the event a defect or deficiency is found in the capture system (during a monthly inspection or between inspections), the permittee must complete repairs within 30 days after the date that the defect or deficiency is discovered. If the permittee determines that the repairs cannot be completed within 30 days, the permittee must submit a written request for an extension of time to complete the repairs that must be received by the Department not more than 20 days after the date that the defect or deficiency is discovered. The request must contain a description of the defect or deficiency, the steps needed and taken to correct the problem, the interim steps being taken to mitigate the emissions impact of the defect or deficiency, and a proposed schedule for completing the repairs. The request shall be deemed approved unless and until such time as the Department notifies the permittee that it objects to the request. The Department may consider all relevant factors in deciding whether to approve or deny the request (including

proposed

feasibility and safety). Each approved schedule must provide for completion of repairs as expeditiously as practicable, and the Department may request modifications to the proposed schedule as part of the approval process.

2) Preventative maintenance for each control device, including a preventative maintenance schedule that is consistent with the manufacturer's instructions for routine and long-term maintenance.

3) Corrective action for all baghouses applied to pushing emissions. In the event a bag leak detection system alarm is triggered, the permittee must initiate corrective action to determine the cause of the alarm within 1 hour of the alarm, initiate corrective action to correct the cause of the problem within 24 hours of the alarm, and complete the corrective action as soon as practicable. Actions may include, but are not limited to:
   A. Inspecting the baghouse for air leaks, torn or broken bags or filter media, or any other condition that may cause an increase in emissions.
   B. Sealing off defective bags or filter media.
   C. Replacing defective bags or filter media or otherwise repairing the control device.
   D. Sealing off a defective baghouse compartment.
   E. Cleaning the bag leak detection system probe, or otherwise repairing the bag leak detection system.
   F. Shutting down the process producing the particulate emissions.

g. For the PEC system baghouse applied to pushing emissions from a coke oven battery, the permittee shall at all times monitor the relative change in particulate matter loadings using a bag leak detection system according to the requirements in V.B.3.g and conduct inspections at their specified frequency according to the following requirements: [§2103.12.h.6; §2103.12.i; §63.7330(a)]

1) Monitor the pressure drop across each baghouse cell each day to ensure pressure drop is within the normal operating range identified in the manual;
2) Confirm that dust is being removed from hoppers through weekly visual inspections or equivalent means of ensuring the proper functioning of removal mechanisms;
3) Check the compressed air supply for pulse-jet baghouses each day;
4) Monitor cleaning cycles to ensure proper operation using an appropriate methodology;
5) Check bag cleaning mechanisms for proper functioning through monthly visual inspection or equivalent means;
6) Make monthly visual checks of bag tension on reverse air and shaker-type baghouses to ensure that bags are not kinked (kneed or bent) or laying on their sides. The permittee does not have to make this check for shaker-type baghouses using self-tensioning (spring-loaded) devices;
7) Confirm the physical integrity of the baghouse through quarterly visual inspections of the baghouse interior for air leaks; and
8) Inspect fans for wear, material buildup, and corrosion through quarterly visual inspections, vibration detectors, or equivalent means.

h. The permittee shall install, operate, and maintain a bag leak detection system on the PEC baghouse according to the following requirements: [§2103.12.h.6; §2103.12.i; §63.7331(a)]

1) The system must be certified by the manufacturer to be capable of detecting emissions of particulate matter at concentrations of 10 milligrams per actual cubic meter (0.0044 grains per actual cubic foot) or less;
2) The system must provide output of relative changes in particulate matter loadings;

proposed

3) The system must be equipped with an alarm that will sound when an increase in relative particulate loadings is detected over a preset level. The alarm must be located such that it can be heard by the appropriate plant personnel;
4) Each system that works based on the triboelectric effect must be installed, operated, and maintained in a manner consistent with the guidance document, "Fabric Filter Bag Leak Detection Guidance" (EPA-454/R-98-015, September 1997). The permittee may install, operate, and maintain other types of bag leak detection systems in a manner consistent with the manufacturer's written specifications and recommendations;
5) To make the initial adjustment of the system, establish the baseline output by adjusting the sensitivity (range) and the averaging period of the device. Then, establish the alarm set points and the alarm delay time;
6) Following the initial adjustment, do not adjust the sensitivity or range, averaging period, alarm set points, or alarm delay time, except as detailed in the operation and maintenance plan. Do not increase the sensitivity by more than 100 percent or decrease the sensitivity by more than 50 percent over a 365-day period unless a responsible official certifies, in writing, that the baghouse has been inspected and found to be in good operating condition; and
7) Where multiple detectors are required, the system's instrumentation and alarm may be shared among detectors.

i. For each CPMS required in V.B.3.n below, the permittee must develop and make available for inspection upon request by the Department a site-specific monitoring plan that addresses the requirements in conditions V.B.3.i.1) through 6) below below: [§2103.12.h.6; §2103.12.i; §63.7331(b)]

1) Installation of the CPMS sampling probe or other interface at a measurement location relative to each affected process unit such that the measurement is representative of control of the exhaust emissions (e.g., on or downstream of the last control device);
2) Performance and equipment specifications for the sample interface, the parametric signal analyzer, and the data collection and reduction system;
3) Performance evaluation procedures and acceptance criteria (e.g., calibrations);
4) Ongoing operation and maintenance procedures in accordance with the general requirements of §63.8(c)(1), (3), (4)(ii), (7), and (8);
5) Ongoing data quality assurance procedures in accordance with the general requirements of §63.8(d); and
6) Ongoing recordkeeping and reporting procedures in accordance the general requirements of §63.10(c), (e)(1), and (e)(2)(i).

j. The permittee shall conduct a performance evaluation of each CPMS in accordance with the site-specific monitoring plan. [§2103.12.h.6; §2103.12.i; §63.7331(c)]

k. The permittee shall operate and maintain each CPMS in continuous operation according to the site-specific monitoring plan. [§2103.12.h.6; §2103.12.i; §63.7331(d)]

l. If the permittee elects the operating limit in V.B.1.e.1) above for a capture system applied to pushing emissions, the permittee must install, operate, and maintain a device to measure the fan motor amperes. [§2103.12.h.6; §2103.12.i; §63.7331(h)]

m. If the permittee elects the operating limit in V.B.1.e.2) above for a capture system applied to pushing emissions, the permittee must install, operate, and maintain a device to measure the total volumetric flow rate at the inlet of the control device. [§2103.12.h.6; §2103.12.i; §63.7331(g)]

proposed

n. For each capture system applied to pushing emissions, the permittee shall at all times monitor the fan motor amperes according to the requirements in condition V.B.3.l above or the volumetric flow rate according to the requirements in condition V.B.3.m above. [§2103.12.h.6; §2103.12.i; §63.7330(d)]

o. Except for monitor malfunctions, associated repairs, and required quality assurance or control activities (including as applicable, calibration checks and required zero and span adjustments), the permittee shall monitor continuously (or collect data at all required intervals) at all times the affected source is operating. [§2103.12.h.6; §2103.12.i; §63.7332(a)]

p. The permittee shall not use data recorded during monitoring malfunctions, associated repairs, and required quality assurance or control activities in data averages and calculations used to report emission or operating levels, or in fulfilling a minimum data availability requirement, if applicable. The permittee shall use all the data collected during all other periods in assessing compliance. A monitoring malfunction is any sudden, infrequent, not reasonably preventable failure of the monitor to provide valid data. Monitoring failures that are caused in part by poor maintenance or careless operation are not malfunctions. [§2103.12.h.6; §2103.12.i; §63.7332(b)]

q. For each capture system applied to pushing emissions and subject to the operating limit in condition V.B.1.e above, the permittee shall demonstrate continuous compliance by meeting the requirements in condition V.B.3.q.1) or V.B.3.q.2) below: [§2103.12.h.6; §2103.12.i; §63.7333(d)]

1) If the permittee elects the operating limit for fan motor amperes in V.B.1.e.1) V.B.1.e.1) above:
   A. Maintaining the daily average fan motor amperes at or above the minimum level established during the initial or subsequent performance test; and
   B. Checking the fan motor amperes at least every 8 hours to verify the daily average is at or above the minimum level established during the initial or subsequent performance test and recording the results of each check.

2) If the permittee elects the operating limit for volumetric flow rate in V.B.1.e.2) above:
   A. Maintaining the daily average volumetric flow rate at the inlet of the control device at or above the minimum level established during the initial or subsequent performance test; and
   B. Checking the volumetric flow rate at least every 8 hours to verify the daily average is at or above the minimum level established during the initial or subsequent performance test and recording the results of each check.

r. The permittee shall demonstrate continuous compliance with the work practice standards for fugitive pushing emissions according to the following requirements: [§2103.12.h.6; §2103.12.i; §63.7334(a)]

1) Observe and record the opacity of fugitive emissions for four consecutive pushes per operating day, except the permittee may make fewer or non-consecutive observations as permitted by condition V.B.3.d.2) above. Maintain records of the pushing schedule for each oven and records indicating the legitimate operational reason for any change in the pushing schedule according to condition V.B.3.d.3) above.
2) Observe and record the opacity of fugitive emissions from each oven in a battery at least once every 90 days. If an oven cannot be observed during a 90-day period, observe and record the opacity of the first push of that oven following the close of the 90-day period that can be read in accordance with the procedures in conditions V.B.3.r.1) above through V.B.3.r.8) below.
3) Make all observations and calculations for opacity observations of fugitive pushing emissions

proposed

in accordance with Method 9 in Appendix A to 40 CFR Part 60 using a Method 9 certified observer unless the permittee has an approved alternative procedure under V.B.3.r.7) below.

4) Record pushing opacity observations at 15-second intervals as required in section 2.4 of Method 9 (Appendix A to 40 CFR Part 60). The requirement in section 2.4 of Method 9 for a minimum of 24 observations does not apply, and the data reduction requirements in section 2.5 of Method 9 do not apply. The requirement in §63.6(h)(5)(ii) for obtaining at least 3 hours of observations (thirty 6-minute averages) to demonstrate initial compliance does not apply.
5) If fewer than six but at least four 15-second observations can be made, use the average of the total number of observations to calculate average opacity for the push. Missing one or more observations during the push (e.g., as the quench car passes behind a building) does not invalidate the observations before or after the interference for that push. However, a minimum of four 15-second readings must be made for a valid observation.
6) Begin observations for a push at the first detectable movement of the coke mass. End observations of a push when the quench car enters the quench tower.
   A. Observe fugitive pushing emissions from a position at least 10 meters from the quench car that provides an unobstructed view and avoids interferences from the topside of the battery. This may require the observer to be positioned at an angle to the quench car rather than perpendicular to it. Typical interferences to avoid include emissions from open standpipes and charging.
   B. Observe the opacity of emissions above the battery top with the sky as the background where possible. Record the oven number of any push not observed because of obstructions or interferences.
   C. The permittee may reposition after the push to observe emissions during travel if necessary.

7) If it is infeasible to implement the procedures in conditions V.B.3.r.1) through V.B.3.r.6) above for an oven due to physical obstructions, nighttime pushes, or other reasons, the permittee may apply to the Department for permission to use an alternative procedure. The application must provide a detailed explanation of why it is infeasible to use the procedures in conditions V.B.3.r.1) through V.B.3.r.6) above, identify the oven and battery numbers, and describe the alternative procedure. An alternative procedure must identify whether the coke in that oven is not completely coked, either before, during, or after an oven is pushed.

8) For each oven observed that exceeds an opacity of 30 percent for any short battery or 35 percent for any tall battery, the permittee must take corrective action and/or increase the coking time in accordance with condition V.B.3.d above. Maintain records documenting conformance with condition V.B.3.d above.

s. For each coke oven battery with a capture system or control device applied to pushing emissions, the permittee shall demonstrate continuous compliance with the operation and maintenance requirements in Condition V.B.3.f above by meeting the following requirements: [§2103.12.j; §63.7335(b)]

1) Making monthly inspections of capture systems according to Condition V.B.3.f.1) above and recording all information needed to document conformance with these requirements;
2) Performing preventative maintenance for each control device according to Condition V.B.3.f.2) above and recording all information needed to document conformance with these requirements; and
3) Initiating and completing corrective action for a bag leak detection system alarm according to Condition V.B.3.f.3) above and recording all information needed to document conformance with these requirements. This includes records of the times the bag leak detection system alarm

proposed

sounds, and for each valid alarm, the time corrective action was initiated, the corrective action(s) taken, and the date on which corrective action is completed.

t. To demonstrate continuous compliance with the operation and maintenance requirements for a baghouse applied to pushing emissions from a coke oven battery in V.B.3.h above, the permittee shall inspect and maintain each baghouse according to the requirements in conditions V.B.3.h.1) through V.B.3.h.7) above and record all information needed to document conformance with these requirements. If the permittee increases or decreases the sensitivity of the bag leak detection system beyond the limits specified in condition V.B.3.h.6), the permittee must include a copy of the required written certification by a responsible official in the next semiannual compliance report. [§2103.12.h.6; §2103.12.i; §63.7335(c)]

4. Record Keeping Requirements:

a. The results of the inspections required by Condition V.B.3.c above shall be recorded weekly. [§2103.12.j; IP 0052-I006]

b. Episodes of non-compliance with Conditions V.B.1.a through V.B.1.g above and corrective actions taken shall be recorded upon occurrence. [§2103.12.j; IP 0052-I006]

c. The permittee shall keep records of each baghouse maintenance inspection and repair, replacement or other corrective action. [§2103.12.j; IP 0052-I006]

d. All records shall be retained by the facility for at least five (5) years. These records shall be made available to the Department upon request for inspection and/or copying. [2103.12.j; IP 0052-I006]

e. The permittee shall keep the following records: [§2103.12.j; §63.7342(a)]

1) A copy of each notification and report that was submitted to comply with this subpart, including all documentation supporting any initial notification or notification of compliance status that the permittee submitted, according to the requirements in §63.10(b)(2)(xiv).
2) The records in §63.6(e)(3)(iii) through (v) related to startup, shutdown, and malfunction.
3) Records of performance tests, performance evaluations, and opacity observations as required in §63.10(b)(2)(viii).

f. For each COMS or CEMS, the permittee shall keep the following records. [§2103.12.j; §63.7342(b)]

1) Records described in §63.10(b)(2)(vi) through (xi).
2) Monitoring data for COMS during a performance evaluation as required in §63.6(h)(7)(i) and (ii).
3) Previous (that is, superceded) versions of the performance evaluation plan as required in §63.8(d)(3).
4) Records of the date and time that each deviation started and stopped and whether the deviation occurred during a period of startup, shutdown, or malfunction or during another period.

g. The permittee shall keep the records in §63.6(h)(6) for visual observations. [§2103.12.h.6; §2103.12.j; §63.7342(c)]

proposed

h. The permittee shall keep the records required in Conditions V.B.3.q through V.B.3.s above to show continuous compliance with each emission limitation, work practice standard, and operation and maintenance requirement that applies. [§2103.12.j; §63.7342(d)]

i. The permittee shall keep records in a form suitable and readily available for expeditious review, according to §63.10(b)(1). [§2103.12.j; §63.7343(a)]

j. As specified in §63.10(b)(1), the permittee shall keep each record for 5 years following the date of each occurrence, measurement, maintenance, corrective action, report, or record. [§2103.12.j; §63.7343(b)]

k. The permittee shall keep each record on site for at least 2 years after the date of each occurrence, measurement, maintenance, corrective action, report, or record, according to §63.10(b)(1). The permittee can keep the records offsite for the remaining 3 years. [§2103.12.j; §63.7343(c)]

l. The permittee shall inspect and maintain the pushing emission control baghouse as required in V.B.3.h.1) through V.B.3.h.7) above and record all information needed to document conformance with these requirements. If the permittee increases or decreases the sensitivity of the bag leak detection system beyond the limits specified in V.B.3.h.6) above, the permittee must include a copy of the required written certification by a responsible official in the next semiannual compliance report. [[§2103.12.j; 63.7335(c)]

m. The permittee shall maintain a current copy of the operation and maintenance plans required in V.B.3.f onsite and available for inspection upon request. The plans shall be kept for the life of the affected source or until the affected source is no longer subject to the requirements of 40 CFR Part 63, Subpart CCCCC. [63.7335(d)]

5. Reporting Requirements:

a. No later than twenty (20) days after the end of each month, a written report of a summary of the following during each such month shall be submitted to the Department: [§2109.03; Enforcement Order 202.E, 3/28/90]

1) For each individual coke battery or group of batteries served by the same pushing emission control system, and for all coke batteries combined:
   A. The total number of pushes for the month;
   B. The total number of controlled pushes for the month; and the monthly percentage availability (on-line time) of the pushing control system, based on the total number of pushes and the total number of controlled pushes.

2) For each outage of the pushing control system at each individual coke battery or group of batteries served by the same pushing emission control system:
   A. The batteries affected;
   B. The starting and ending dates and times;
   C. The total time of each outage, to the nearest tenth of an hour;
   D. The corresponding Department Breakdown Number; and the reason(s) or cause(s) for the outage.

b. The permittee shall report all instances of non-compliance with Conditions V.B.1.a through V.B.1.g above, V.B.3 above, V.B.4.a through V.B.4.d above along with all corrective action taken

proposed

to restore the subject equipment to compliance, to the Department every six months. [§2103.12.k; IP 0052-I006]]

c. Reporting instances of non-compliance in accordance with Condition V.B.5.b above, does not relieve the permittee of the requirement to report breakdowns in accordance with §2108.01.c, if appropriate. [§2103.12.k; IP 0052-I006]

d. The permittee shall report each instance in which each emission limitation in Conditions V.B.1.d, V.B.1.e and V.B.1.f was not met. This includes periods of startup, shutdown, and malfunction. The permittee shall also report each instance in which the permittee did not meet each work practice standard or operation and maintenance requirement in Conditions V.B.6.a, V.B.6.b and V.B.6.c. These instances are deviations from the emission limitations (including operating limits), work practice standards, and operation and maintenance requirements of 40 CFR Part 63, Subpart CCCCC permit section. These deviations must be reported according to the requirements in V.B.5.h through V.B.5.k below. [§2103.12.k; §2103.12.h.6; §63.7336(a)]

e. During periods of startup, shutdown, and malfunction, the permittee must operate in accordance with the startup, shutdown, and malfunction plan. [§2103.12.k; §2103.12.h.6; §63.7336(b)]

1) Consistent with §63.6(e) and 63.7(e)(1), deviations that occur during a period of startup, shutdown, or malfunction are not violations if the permittee demonstrates to the Department's satisfaction that operation was in accordance with the startup, shutdown, and malfunction plan.
2) The Department will determine whether deviations that occur during a period of startup, shutdown, or malfunction are violations, according to the provisions in §63.6(e).

f. The permittee shall submit all of the notifications in §63.6(h)(4) and (5), 63.7(b) and (c), 63.8(e) and (f)(4), and 63.9(b) through (h) that apply by the specified dates. [§2103.12.k; §2103.12.h.6; §63.7340(a)]

g. The permittee shall submit a notification of intent to conduct a performance test at least 60 calendar days before the performance test is scheduled to begin as required in §63.7(b)(1). [§2103.12.k; §2103.12.h.6; §63.7340(d)]

h. The permittee must submit semiannual compliance reports for the PEC stacks to the Department according to the requirements in General Condition III.15 above. All semiannual compliance reports must be postmarked or delivered no later than July 31 or January 31, whichever date is the first date following the end of the semiannual reporting period. [§2103.12.k; §2103.12.h.6; §63.7341(a)]

i. Each semiannual compliance report must provide information on compliance with the emission limitations, work practice standards, and operation and maintenance requirements for all affected sources except battery stacks. The reports must include the information in V.B.5.i.1) through V.B.5.i.3) below, and as applicable, Conditions V.B.5.i.4) through V.B.5.i.8) below. [§2103.12.k; §63.7341(c)]

1) Company name and address.
2) Statement by a responsible official, with the official's name, title, and signature, certifying the truth, accuracy, and completeness of the content of the report.
3) Date of report and beginning and ending dates of the reporting period.
4) If there was a startup, shutdown, or malfunction during the reporting period and the permittee

proposed

took actions consistent with the startup, shutdown, and malfunction plan, the compliance report must include the information in §63.10(d)(5)(i).

5) If there were no deviations from the continuous compliance requirements in Conditions V.B.3.q through V.B.3.s, a statement that there were no deviations from the emission limitations, work practice standards, or operation and maintenance requirements during the reporting period.

6) If there were no periods during which a continuous monitoring system (including COMS, continuous emission monitoring system (CEMS), or CPMS) was out-of-control as specified in §63.8(c)(7), a statement that there were no periods during which a continuous monitoring system was out-of-control during the reporting period.

7) For each deviation from an emission limitation in 40 CFR 63, Subpart CCCCC and for each deviation from the requirements for work practice standards in this 40 CFR Part 63, Subpart CCCCC that occurs at an affected source where the permittee is not using a continuous monitoring system (including a COMS, CEMS, or CPMS) to comply with the emission limitations in this subpart, the compliance report must contain the information in Conditions V.B.5.i.4), V.B.5.i.7)A and V.B.5.i.7)B below. This includes periods of startup, shutdown, and malfunction

   A. The total operating time of each affected source during the reporting period.
   B. Information on the number, duration, and cause of deviations (including unknown cause, if applicable) as applicable and the corrective action taken.

8) For each deviation from an emission limitation occurring at an affected source where the permittee is using a continuous monitoring system (including COMS, CEMS, or CPMS) to comply with the emission limitation 40 CFR 63, Subpart CCCCC, the permittee must include the information in Conditions V.B.5.i.4), and V.B.5.i.8)A through V.B.5.i.8)L below. This includes periods of startup, shutdown, and malfunction.

   A. The date and time that each malfunction started and stopped.
   B. The date and time that each continuous monitoring system (including COMS, CEMS, or CPMS) was inoperative, except for zero (low-level) and high-level checks.
   C. The date, time, and duration that each continuous monitoring system (including COMS, CEMS, or CPMS) was out-of-control, including the information in §63.8(c)(8).
   D. The date and time that each deviation started and stopped, and whether each deviation occurred during a period of startup, shutdown, or malfunction or during another period.
   E. A summary of the total duration of the deviation during the reporting period and the total duration as a percent of the total source operating time during that reporting period.
   F. A breakdown of the total duration of the deviations during the reporting period into those that are due to startup, shutdown, control equipment problems, process problems, other known causes, and other unknown causes.
   G. A summary of the total duration of continuous monitoring system downtime during the reporting period and the total duration of continuous monitoring system downtime as a percent of the total source operating time during the reporting period.
   H. An identification of each HAP that was monitored at the affected source.
   I. A brief description of the process units.
   J. A brief description of the continuous monitoring system.
   K. The date of the latest continuous monitoring system certification or audit.
   L. A description of any changes in continuous monitoring systems, processes, or controls since the last reporting period.

j. If the permittee had a startup, shutdown, or malfunction during the semiannual reporting period

proposed

that was not consistent with the startup, shutdown, and malfunction plan, the permittee must submit an immediate startup, shutdown, and malfunction report according to the requirements in §63.10(d)(5)(ii). [§2103.12.h.6; §2103.12.k §63.7341(d)]

k. If the permittee submits a compliance report for an affected source along with, or as part of, the semiannual monitoring report required by 40 CFR 70.6(a)(3)(iii)(A), and the compliance report includes all the required information concerning deviations from any emission limitation or work practice standard in 40 CFR Part 63, Subpart CCCCC, submission of the compliance report satisfies any obligation to report the same deviations in the semiannual monitoring report. However, submission of a compliance report does not otherwise affect any obligation the permittee may have to report deviations from permit requirements to the Department. [§2103.12.h.6; §2103.12.k §63.7341(e)]

6. Work Practice Standards:

a. The permittee shall develop and implement a written startup, shutdown, and malfunction plan according to the provisions in 40 CFR 63, Subpart A, §63.6(e)(3). [§2103.12.h.6; §63.7310(c)]

b. As required by §63.6(e)(1)(i), the permittee shall operate and maintain each coke battery including air pollution control and monitoring equipment, in a manner consistent with good air pollution control practices for minimizing emissions at least to the levels required by 40 CFR Part 63, Subpart CCCCC. [§2103.12.k; §2103.12.h.6; §63.7300(a)]

c. The permittee shall be in compliance with the emission limitations, work practice standards, and operation and maintenance requirements of 40 CFR 63, Subpart CCCCC at all times, except during periods of startup, shutdown, and malfunction as defined in §63.2. [§2103.12.k; §2103.12.h.6; §63.7310(a)]

d. At no time shall the permittee operate the No. 1, 2, and 3 PEC system unless it is properly operated and maintained according to good engineering and air pollution control practices by performing regular maintenance with the exception of actions to mitigate emergency conditions. [RACT IP 0052-I020b, V.D.1.b; RACT Order No. 234, Condition 1.1; 25 Pa Code §129.99; §2103.12.a.2.B]

7. Additional Requirements:

The definitions in 40 CFR 63.7352 are hereby incorporated into this permit by reference.

PERMIT SHIELD IN EFFECT

proposed

C. Coke Oven Batteries Nos. 13, 14 and 15: P004, P005 & P006

Process Description: Coke Oven Batteries 13, 14 and 15 (identical units)
Facility ID'S: P007, P008 and P009
Max. Design Rate: 545,675 tons of coal per year per battery
Capacity: 1,637,025 tons of coal per year for Batteries 13, 14 and 15
Raw Materials: Coal, supplemented with recycled coke plant materials such as tar decanter sludge, bio sludge, and coke oven gas pipeline material; synfuel; metallurgical coke; petroleum coke; coke breeze; Synfuel additives; recycle tire chips; and bulk density control additives such as diesel fuel.

1. Restrictions:

a. The permittee shall install, operate and maintain a bypass/bleeder stack flare system in each battery that is capable of controlling 120 percent of the normal gas flow generated by each battery, which shall thereafter be operated and maintained. [§2103.12.h.6; §63.307(a)(1)]

b. Coke oven emissions shall not be vented to the atmosphere through bypass/bleeder stacks, except through the flare system. or the alternative control device as described in Condition V.C.1.b below. [§2103.12.h.6; §63.307(a)(2)]

c. As an alternative to the installation, operation, and maintenance of a flare system as required in Conditions V.C.1.a above and V.C.1.b above, the owner or operator may petition the Administrator and the Department for approval of an alternative control device or system that achieves at least 98 percent destruction or control of coke oven emissions vented to the alternative control device or system. [§2103.12.h.6; §63.307(d)]

d. The emergency bypass/bleeder stack flare system for each battery shall be designed for a net heating value of 240 Btu per standard cubic feet (Btu/scf). [§2103.12.h; §63.307(b)(1)]

e. Each flare shall have a continuously operable pilot flame that is present at all times as determined by a thermocouple or any other equivalent device. [§2103.12.h.6; §63.307(b)(2); §63.307(b)(4); §63.309)(h)(2)]

f. At all times including periods of startup, shutdown, and malfunction, the permittee shall operate and maintain the coke oven batteries and the pollution control equipment required under 40 CFR 63, Subpart L, in a manner consistent with good air pollution control practices for minimizing emissions to the levels required by any applicable performance standards under Subpart L. Failure to adhere to these requirements shall not constitute a separate violation if a violation of an applicable performance or work practice standard has also occurred. [§2103.12.h.6; §63.310(a)]

g. The permittee shall not operate, or allow to be operated, any source in such manner that unburned coke oven gas is emitted into the open air. In addition, the permittee shall not flare, mix, or combust coke oven gas, or allow such gas to be flared, mixed or combusted unless the gas meets the requirements of Site Level Condition IV.33. [§2105.21.h; §2105.21.h.4]

h. Each flare installed to meet the requirements of Conditions V.C.1.a above through V.C.1.e above shall be operated with no visible emissions, as determined by Method 22 in Appendix A of 40 CFR Part 60, except for periods not to exceed a total of 5 minutes during any 2 consecutive hours with an observation period of 2 hours. [§2103.12.h.6; §63.307(c); §63.309(h)(1)]

proposed

i. The permittee shall not cause to be discharged or allow to be discharged to the atmosphere coke oven emissions that exceed any of the following emission limitations: [§2103.12.h.6; §63.304(b)(2)]

1) 3.3 percent leaking coke oven doors as determined by the procedures in condition IV.30.c.1) above;
2) 0.4 percent leaking topside port lids, as determined by the procedures in condition IV.30.c.1) above;
3) 2.5 percent leaking offtake system(s), as determined by the procedures in condition IV.30.c.1) above; and
4) 12 seconds of visible emissions per charge, as determined by the procedures in condition IV.30.c.2) above.

j. The permittee shall implement the provisions of the work practice plan, required in Condition IV.29 above following the second independent exceedance of the visible emission limitation for the emission point in any consecutive 6-month period, by no later than 3 days after receipt of written notification of the second such exceedance from the certified observer. [§2103.12.h.6; §63.306(c)(1)(i)]

k. The permittee shall not operate, or allow to be operated any battery of coke ovens in such manner that the aggregate of visible charging emissions exceeds a total of 55 seconds during any five (5) consecutive charges on such battery. [§2105.21.a.1]

l. The permittee shall not operate, or allow to be operated Coke Oven Batteries 13, 14 or 15 in such manner that emissions from the door areas of any coke oven exceed an opacity of 40% at any time 15 or more minutes after such oven has been charged. [§2105.21.b.4]

m. The permittee shall not operate, or allow to be operated Coke Oven Batteries 13, 14 or 15 in such manner that, at any time, there are visible emissions from more than five percent (5%) of the door areas of the operating coke ovens in such battery, excluding the two door areas of the last oven charged and any door areas obstructed from view. [§2105.21.b.1]

n. The permittee shall not operate, or allow to be operated Coke Oven Batteries 13, 14 or 15 in such manner that, at any time, there are visible emissions from more than one percent (1%) of the charging ports or charging port seals on the operating coke ovens of such battery. [§2105.21.c.1]

o. The permittee shall not operate, or allow to be operated Coke Oven Batteries 13, 14 or 15 in such manner that, at any time, there are visible emissions from more than four percent (4%) of the offtake piping on the operating coke ovens of such battery. [§2105.21.d.1]

p. The permittee shall not operate, or allow to be operated Coke Oven Batteries 13, 14 or 15 in such manner that visible emissions from the transport of hot coke in the open atmosphere exceed ten percent (10%) opacity at any time. [§2105.21.e.5]

q. The permittee shall not operate, or allow to be operated, Coke Oven Batteries 13, 14 or 15 in such manner that, at any time, emissions from the combustion stack serving such battery exceed a particulate concentration of 0.015 grains per dry standard cubic foot. [§2105.21.f.1]

r. The permittee shall not operate, or allow to be operated, Coke Oven Batteries 13, 14 or 15 in such manner that, at any time, emissions from the combustion stack serving each battery equal or exceed an opacity of 20% for a period or periods aggregating in excess of three (3) minutes in any 60

proposed

minute period; or equal or exceed an opacity of 60% at any time. [§2105.21.f.3 & 4]

s. The permittee shall install, operate, maintain and calibrate a continuous opacity monitoring system on each combustion stack serving Coke Oven Batteries 13, 14 and 15. [Enforcement Order No. 161, July 23, 1990]

t. The permittee shall not discharge to the atmosphere any emissions from any battery stack that exhibit an opacity greater than the following applicable limits: [§2103.12.h.6; §63.7296(a)-(b)]
1) Daily average of 15 percent opacity for a battery on a normal coking cycle.
2) Daily average of 20 percent opacity for a battery on battery-wide extended coking.

u. The permittee shall submit a notification of compliance status containing the results of the COMS performance test for battery stacks within 30 calendar days following the completion of the compliance demonstration. For each particulate matter emission limitation that applies, the permittee shall submit a notification of compliance status containing the results of the performance test within 60 calendar days following completion of the performance test according to §63.10(d)(2). [§2103.12.h.6; §63.7326(d)]

v. Emissions from the combustion stack for Coke Battery No. 13 shall not exceed the emission limitations in Table V-C-1. [§2105.21.f.2;; §2103.12.a.2.B; §2101.11.b & c].

TABLE V-C-1
Emission Limitations for Battery No. 13 Combustion Stack

POLLUTANT	HOURLY EMISSION LIMIT (lb/hr)**	ANNUAL** EMISSION LIMIT (tons/year)[1]
PM	8.33	36.50
PM_{10}	7.16	31.39
$PM_{2.5}$	5.33	23.36
$PM_{condensible}$	2.97	13.0
NO_X	54.04	236.71
CO	38.38	168.08
VOC	1.80	7.86

[1]A year is defined as any consecutive 12-month period.
**NO_X, CO and VOC emissions include combustion stack, soaking, charging, door leaks, lid leaks, offtake leaks, decarbonization.

w. SO_2 emissions from Battery 13 shall not exceed the limitations in Table V-C-1a below: [§2105.21.h; SO_2 SIP IP 0052-I017, Condition V.A.1.b]

proposed

TABLE V-C-1a
SO_2 Emission Limitations for Battery No. 13 Combustion Stack

Process	Thirty-day (30-day) Emission Limit* (lb/hr)	Supplementary 24-hr Limit** (lb/hr)[1]	Annual Emission Limit (tons/year)[1]
Battery 13 Underfiring	13.93	15.70	61.03

*Limits are based on a rolling 30-day average of 24-hour (calendar day) averages, with an additional restriction of no more than 3 consecutive days above a supplementary 24-hour limit. These limits are based on ACHD's SO_2 State Implementation Plan (SIP) Permit Revision and USEPA SO_2 Guidance dated September 14, 2017.

**Tons/year value is used to demonstrate the expected tons/year from this unit. The value is derived by converting the 30-day rolling average limit lb/hr to an annual tons per year value. These limits are based on ACHD's SO_2 State Implementation Plan (SIP) Permit Revision and USEPA SO_2 Guidance dated September 14 2017.

x. Emissions from the combustion stack for Coke Battery No. 14 shall not exceed the emission limitations in Table V-C-2. [§2105.21.f.2; §2105.21.h.4; §2101.11.b & c].

TABLE V-C-2
Emission Limitations for Battery No. 14 Combustion Stack

POLLUTANT	HOURLY EMISSION LIMIT (lb/hr)	ANNUAL EMISSION LIMIT (tons/year)[1]
PM	8.33	36.50
PM_{10}	8.33	36.50
$PM_{2.5}$	8.33	36.50
$PM_{condensible}$	2.20	9.64
NO_X	47.13	206.43
CO	45.29	198.38
VOC	1.78	7.80

[1]A year is defined as any consecutive 12-month period.

**NO_X, CO and VOC emissions include combustion stack, soaking, charging, door leaks, lid leaks, offtake leaks, decarbonization.

y. SO_2 emissions from Battery 14 shall not exceed the limitations in Table V-C-2a below: [§2105.21.h; SO_2 SIP IP 0052-I017, Condition V.A.1.b]

TABLE V-C-2a – SO_2 Emission Limitations
Battery No. 14 Combustion Stack

Process	Thirty-day (30-day) Emission Limit* (lb/hr)	Supplementary 24-hr Limit** (lb/hr)[1]	Annual Emission Limit (tons/year)[1]
Battery 14 Underfiring	14.03	15.80	61.45

*Limits are based on a rolling 30-day average of 24-hour (calendar day) averages, with an additional restriction of no more than 3 consecutive days above a supplementary 24-hour limit. These limits are based on ACHD's SO_2 State Implementation Plan (SIP) Permit Revision and USEPA SO_2 Guidance dated September 14, 2017.

proposed

**Tons/year value is used to demonstrate the expected tons/year from this unit. The value is derived byconverting the 30-day rolling average limit lb/hr to an annual tons per year value. These limits are based on ACHD's SO_2 State Implementation Plan (SIP) Permit Revision and USEPA SO_2 Guidance dated September 14, 2017.

z. Emissions from each combustion stack for Coke Battery No. 15 shall not exceed the emission limitations in Table V-C-3. [§2105.21.f.2; §2105.21.h.4; §2101.11.b & c].

TABLE V-C-3
Emission Limitations for Battery No. 15 Combustion Stack

POLLUTANT	HOURLY EMISSION LIMIT (lb/hr)	ANNUAL EMISSION LIMIT (tons/year)[1]
PM	8.33	36.50
PM_{10}	8.33	36.50
$PM_{2.5}$	8.33	36.50
$PM_{condensible}$	2.20	9.62
NO_X	58.54	256.41
CO	24.94	109.26
VOC	1.69	7.42

[1]A year is defined as any consecutive 12-month period.

**NO_X, CO and VOC emissions include combustion stack, soaking, charging, door leaks, lid leaks, offtake leaks, decarbonization.

aa. SO_2 emissions from Battery 15 shall not exceed the limitations in Table V-C-3a below: [§2105.21.h; SO_2 SIP IP 0052-I017, Condition V.A.1.b]

TABLE V-C-3a – SO_2 Emission Limitations
Battery No. 15 Combustion Stack

Process	Thirty-day (30-day) Emission Limit* (lb/hr)	Supplementary 24-hr Limit** (lb/hr)[1]	Annual Emission Limit (tons/year)[1]
Battery 15 Underfiring	18.67	21.04	81.77

*Limits are based on a rolling 30-day average of 24-hour (calendar day) averages, with an additional restriction of no more than 3 consecutive days above a supplementary 24-hour limit. These limits are based on ACHD's SO_2 State Implementation Plan (SIP) Permit Revision and USEPA SO_2 Guidance dated September 14, 2017.

**Tons/year value is used to demonstrate the expected tons/year from this unit. The value is derived by converting the 30-day rolling average limit lb/hr to an annual tons per year value. These limits are based on ACHD's SO_2 State Implementation Plan (SIP) Permit Revision and USEPA SO_2 Guidance dated September 14, 2017.

2. Testing Requirements:

a. The permittee shall have PM, $PM_{2.5}$ and PM_{10} emissions stack tests performed on the combustion stacks of Coke Batteries 13, 14 and 15 at least once every two (2) years from the date of the prior valid test to demonstrate compliance with the mass emission standard in Condition V.C.1.q above. Particulate emission tests shall be conducted according to the methodology specified in 40 CFR 60, Appendix A (Methods 1 through 5, 201A and 202 or other method specified). The permittee shall submit a stack test protocol to the Department at least 45 days prior to the test dates. During

proposed

each stack test performed, simultaneous visible emission evaluations shall be conducted according to the methodology specified in 40 CFR 60, Appendix A, Method 9, except for the provisions of Section 2.5 of Method 9. [§2103.12.h.1; §2108.02.e; Second Consent Decree, 6/24/1993]

b. The permittee shall have sulfur dioxide (SO_2) emissions stack tests performed on the combustion stacks of Coke Batteries 13, 14 and 15 at least once every two years to demonstrate compliance with the mass emission limitations for each combustion stack in Conditions V.C.1.w, V.C.1.y, and V.C.1.aa above. SO_2 emission tests shall be conducted according to Method 6, 6A, 6B, or 6C specified in 40 CFR 60, Appendix A. The permittee shall submit a stack test protocol to the Department at least 45 days prior to the test dates. [§2108.02.b & e; SO_2 SIP IP 0052-I017, Condition V.A.2.a]

c. Emissions of SO_2 shall be determined by converting the H_2S grain loading of the fuel burned and the fuel flow rate to pounds per hour to determine compliance with the emission limitations of Conditions V.C.1.w, V.C.1.y, and V.C.1.aa above. [§2103.12.h.1; SO_2 SIP IP 0052-I017, Condition V.A.2.b]

d. The permittee shall perform emissions testing for NO_X, CO and VOC on each combustion stack of Coke Batteries 13, 14 and 15 to demonstrate compliance with the mass emission limitation for each combustion stack in Conditions V.C.1.v, V.C.1.x, and V.C.1.z above. Testing for NO_X, CO and VOC shall be conducted at least once every two years in accordance with approved EPA Methods (Method 7, 7A, 7B, 7C, 7D or 7E & Method 10, 10A or 10B) in Appendix A of 40 CFR Part 60, Article XXI §2108.02, and as approved by the Department. The permittee shall submit a stack test protocol to the Department for approval at least 45 days prior to the test dates. [§2105.06.b.4.B; §2103.12.h.1; §2108.02.b; §2108.02.e.]

e. The permittee shall comply with the provisions of the applicable performance tests and procedure requirements in Site level Condition IV.30 above. [§63.309; §2103.12.h.1]

f. The Department reserves the right to require additional emissions testing sufficient to assure compliance with the terms and conditions of this permit. Such testing shall be performed in accordance with Site Level Condition IV.14 above and Article XXI §2108.02. (§2103.12.h.1)

3. Monitoring Requirements:

a. The permittee shall:

1) Inspect the collecting main for leaks at least once daily according to the procedures in Method 303 in 40 CFR Part 63, Appendix A [§2103.12.h.6; §63.308(a)]**;**
2) Record the time and date a leak in the collecting main is first observed, the time and date the leak is temporarily sealed, and the time and date of repair [§2103.12.h.6; §63.308(b)];
3) Temporarily seal any leak in the collecting main as soon as possible after detection, but no later than 4 hours after detection of the leak [§2103.12.h.6; §63.308(c)]; and
4) Initiate a collecting main repair as expeditiously as possible, but no later than 5 calendar days after initial detection of the leak. The repair shall be completed within 15 calendar days after initial detection of the leak unless an alternative schedule is approved by the Department [§2103.12.h.6; §2103.12.i; §63.308(d)].

b. The permittee shall prepare and operate at all times according to a written operation and maintenance plan for the general operation and maintenance of all coke oven batteries. Each plan

proposed

must address, at a minimum, the following elements: [§2103.12.h.6; §2103.12.i; §63.7300(b)]

1) Frequency and method of recording underfiring gas parameters.
2) Frequency and method of recording battery operating temperature, including measurement of individual flue and cross-wall temperatures.
3) Procedures to prevent pushing an oven before it is fully coked.
4) Procedures to prevent overcharging and undercharging of ovens, including measurement of coal moisture, coal bulk density, and procedures for determining volume of coal charged.
5) Frequency and procedures for inspecting flues, burners, and nozzles.
6) Schedule and procedures for the daily washing of baffles

c. The permittee shall monitor at all times the opacity of emissions exiting each coke oven battery stack using a COMS according to the requirements in V.C.3.f or §63.7331(j). [§2103.12.h.6; §2103.12.i; §63.7330(e)]

d. The permittee shall conduct a performance evaluation of each CPMS in accordance with the site-specific monitoring plan. [§2103.12.h.6; §2103.12.i; §63.7331(c)]

e. The permittee shall operate and maintain each CPMS in continuous operation according to the site-specific monitoring plan. [§2103.12.h.6; §2103.12.i; §63.7331(d)]

f. For each coke oven battery, the permittee shall install, operate, and maintain a COMS to measure and record the opacity of emissions exiting each stack according to the requirements in Conditions V.C.3.f.1) through V.C.3.f.5) below: [§2103.12.h.6; §2103.12.i; §63.7331(j)]

1) Install, operate, and maintain each COMS according to the requirements in §63.8(e) and Performance Specification 1 in 40 CFR Part 60, Appendix B. Identify periods when the COMS is out-of-control, including any periods that the COMS fails to pass a daily calibration drift assessment, quarterly performance audit, or annual zero alignment audit.
2) Conduct a performance evaluation of each COMS according to the requirements in §63.8 and Performance Specification 1 in Appendix B to 40 CFR Part 60;
3) Develop and implement a quality control program for operating and maintaining each COMS according to the requirements in §63.8(d). At minimum, the quality control program must include a daily calibration drift assessment, quarterly performance audit, and an annual zero alignment audit of each COMS;
4) Each COMS must complete a minimum of one cycle of sampling and analyzing for each successive 10-second period and one cycle of data recording for each successive 6-minute period. The permittee must reduce the COMS data as specified in §63.8(g)(2).
5) Determine and record the hourly and daily (24-hour) average opacity according to the procedures in §63.7324(b) using all the 6-minute averages collected for periods during which the COMS is not out-of-control.

g. Except for monitor malfunctions, associated repairs, and required quality assurance or control activities (including as applicable, calibration checks and required zero and span adjustments), the permittee shall monitor continuously (or collect data at all required intervals) at all times the affected source is operating. [§2103.12.h.6; §2103.12.i; §63.7332(a)]

h. The permittee shall not use data recorded during monitoring malfunctions, associated repairs, and required quality assurance or control activities in data averages and calculations used to report emission or operating levels, or in fulfilling a minimum data availability requirement, if applicable. The permittee shall use all the data collected during all other periods in assessing compliance. A

proposed

monitoring malfunction is any sudden, infrequent, not reasonably preventable failure of the monitor to provide valid data. Monitoring failures that are caused in part by poor maintenance or careless operation are not malfunctions. [§2103.12.h.6; §2103.12.i; §63.7332(b)]

i. The permittee shall demonstrate continuous compliance for each by-product coke oven battery subject to the opacity limit for stacks in Condition V.C.1.t above by meeting the requirements in Conditions V.C.3.i.1) and V.C.3.i.2) below: [§2103.12.h.6; §2103.12.i; §63.7333(e)]

1) Maintaining the daily average opacity at or below 15 percent for a battery on a normal coking cycle or 20 percent for a battery on battery-wide extended coking; and
2) Operating and maintaining a COMS and collecting and reducing the COMS data according to Condition V.C.3.f above.

4. Record Keeping Requirements:

a. The permittee shall maintain files of all required information in a permanent form suitable for inspection at an onsite location for at least 1 year and must thereafter be accessible within 3 working days to the Department for a period of five years. Copies of the work practice plan developed under Condition IV.29 above and the startup, shutdown, and malfunction plan developed under Conditions V.C.6.c through V.C.6.d below shall be kept onsite at all times. The permittee shall maintain the following information: [§2103.12.h.6; §63.311(f); §2103.12.j]

1) A copy of the work practice plan required by section Condition IV.29 above and any revision to the plan;
2) If the permittee is required under Condition IV.29.c above implement the provisions of a work practice plan for a particular emission point, the following records regarding the implementation of plan requirements for that emission point during the implementation period;
   A. Copies of all written and audiovisual materials used in the training, the dates of each class, the names of the participants in each class, and documentation that all appropriate personnel have successfully completed the training required under Condition IV.29.b.1) above;
   B. The records required to be maintained by the plan provisions implementing Condition IV.29.b.7) above;
   C. Records resulting from audits of the effectiveness of the work practice program for the particular emission point, as required in Conditions IV.29.b.3)A, IV.29.b.4)A, IV.29.b.5)A or IV.29.b.6)A above; and
   D. If the plan provisions for coke oven doors must be implemented, records of the inventory of doors and jambs as required under Condition IV.29.b.3)F above; and

3) The design drawings and engineering specifications for the bypass/bleeder stack flare system or approved alternative control device or system as required under Conditions V.C.1.a through V.C.1.e above.
4) Records specified in Condition V.C.6.g below regarding the basis of each malfunction notification.

b. The permittee shall keep the following records: [§2103.12.h.6; §2103.12.j; §63.7342(a)]
1) A copy of each notification and report that was submitted to comply with this subpart, including all documentation supporting any initial notification or notification of compliance status that was submitted, according to the requirements in §63.10(b)(2)(xiv).
2) The records in §63.6(e)(3)(iii) through (v) related to startup, shutdown, and malfunction.

proposed

3) Records of performance tests, performance evaluations, and opacity observations as required in §63.10(b)(2)(viii).

c. For each COMS or CEMS, the permittee shall keep the following records. [§2103.12.h.6; §2103.12.j; §63.7342(b)]

1) Records described in §63.10(b)(2)(vi) through (xi).
2) Monitoring data for COMS during a performance evaluation as required in §63.6(h)(7)(i) and (ii).
3) Previous (that is, superceded) versions of the performance evaluation plan as required in §63.8(d)(3).
4) Records of the date and time that each deviation started and stopped and whether the deviation occurred during a period of startup, shutdown, or malfunction or during another period.

d. The permittee shall keep the records in §63.6(h)(6) for visual observations. [§2103.12.h.6; §2103.12.j; §63.7342(c)]

e. As specified in §63.10(b)(1), the permittee shall keep each record for 5 years following the date of each occurrence, measurement, maintenance, corrective action, report, or record. [§2103.12.h.6; §2103.12.j; §63.7343(b)]

f. The permittee shall keep each record on site for at least 2 years after the date of each occurrence, measurement, maintenance, corrective action, report, or record, according to §63.10(b)(1). The permittee can keep the records offsite for the remaining 3 years. [§2103.12.h.6; §2103.12.j; §63.7343(c)]

g. The permittee must demonstrate continuous compliance with the operation and maintenance requirements in condition V.C.3.b above by adhering at all times to the plan requirements and recording all information needed to document conformance. [63.7335(a)]

h. The permittee shall maintain a current copy of the operation and maintenance plans required in V.C.3.b or §63.7300(b) onsite and available for inspection upon request. The plans shall be kept for the life of the affected source or until the affected source is no longer subject to the requirements of 40 CFR Part 63, Subpart CCCCC. [63.7335(d)]

i. The permittee must demonstrate continuous compliance to the work practice standard for soaking in condition V.C.6.k by maintaining records that document conformance with requirements in V.C.6.k.1) through V.C.6.k.5). [§2103.12.h.6; §2103.12.j; §63.7334(d)]

5. Reporting Requirements:

a. No later than twenty (20) days after the end of each month, a written report of a summary of the following during each such month shall be submitted to the Department: [§2109.03; Enforcement Order 202.E, 3/28/90]

1) For all coke batteries combined, the daily average for the month of:
   A. Coal charged, in tons;
   B. Coke produced, in tons;
   C. Total coke oven gas produced; in MMCF;
   D. Quench water used, in gallons;
   E. Elemental sulfur produced, in tons;

proposed

F. Sulfur content of coal, in percent; and
G. Sulfur content of coke, in percent.

2) For all periods during which contaminated quench water was used:
A. The batteries affected;
B. The starting and ending dates and times;
C. The total time of each period, and total for the month, to the nearest tenth of an hour;
D. The corresponding Department Breakdown Number;
E. The average flow rates of contaminated water to both the quench towers and the water treatment plant during the period, each in gallons per minute; and
F. The reason(s) or cause(s) for each period.

b. No later than twenty (20) days after the end of each month, a written report of a summary of the following for each combustion stack continuous opacity monitoring system during each such month shall be submitted to the Department: [Enforcement Order No. 161, July 23, 1990]

1) The monthly percentage availability (on-line time), based on total minutes of coke operations and total minutes available;
2) The daily percentage available;
3) The number of days on which there was less than 100% availability;
4) For each of the coke oven combustion stack visible emission standards set forth in §2105.21.f.3. & f.4. , the total number of hours for the month, and the number of hours each day, during which an exceedance of such standard was measured by such continuous opacity monitor;
5) The number and nature of tests, calibrations, and any other quality assurance activities performed; and
6) The dates, times and results of all such activities.

c. The permittee shall include the following information in the semiannual compliance certification: [§2103.12.h.6; §2103.12.k; §63.311(d)]

1) Certification, signed by the permittee, that no coke oven gas was vented, except through the bypass/bleeder stack flare system during the reporting period or that a venting report has been submitted according to the requirements in Condition V.C.5.d below.
2) Certification, signed by the permittee, that a startup, shutdown, or malfunction event did not occur for a coke oven battery during the reporting period or that a startup, shutdown, and malfunction event did occur and a report was submitted according to the requirements in Condition V.C.6.f below; and
3) Certification, signed by the permittee, that work practices were implemented if applicable under Conditions IV.29 above.

d. The permittee shall report any venting of coke oven gas through a bypass/bleeder stack that was not vented through the bypass/bleeder stack flare system to the Department as soon as practicable but no later than 24 hours after the beginning of the event. A written report shall be submitted within 30 days of the event and shall include a description of the event and, if applicable, a copy of the notification for a hazardous substance release required pursuant to 40 CFR§302.6. [§2103.12.h.6; §2103.12.k; §63.311(e)]

e. In order for the provisions of §63.310(i) to apply with respect to the observation (or set of observations) for a particular day, notification of a startup, shutdown, or a malfunction shall be made by the permittee as follows: [§2103.12.h.6; §2103.12.k; §63.310(d)]

proposed

1) If practicable, to the certified observer if the observer is at the facility during the occurrence; or
2) To the Department, in writing, within 24 hours of the occurrence first being documented by a company employee, and if the notification was not made, an explanation of why no such notification was made.

f. Within 14 days of the notification made in accordance with condition §63.310(d), or after a startup or shutdown, the permittee shall submit a written report to the Department that: [§2103.12.h.6; §2103.12.k; §63.310(e)]

1) Describes the time and circumstances of the startup, shutdown, or malfunction; and
2) Describes actions taken that might be considered inconsistent with the startup, shutdown, or malfunction plan.

g. The permittee shall submit a written quarterly report within thirty (30) days after the close of each calendar quarter to the Department. The quarterly reports shall contain, at minimum the list of every clock hour in the calendar quarter that compliance is not achieved for Article XXI opacity limits applicable to Batteries 13-15 combustion stacks as measured by the combustion stacks continuous opacity monitor (COM). U.S. Steel shall indicate the date, time, root cause, and ovens that are believed to have contributed to the exceedance. [§2103.12.k]

h. The permittee shall submit to the Department a Semi-Annual Deviation Reports for all deviations from Article XXI §2105.21(e) (4) and (e)(5) for Batteries 13-15. [§2103.12.k]

i. The permittee shall report each instance in which emission limitation in Conditions V.C.1.t and V.C.1.u are not met. This includes periods of startup, shutdown, and malfunction. The permittee shall also report each instance in which the permittee did not meet each work practice standard or operation and maintenance requirement in Conditions V.C.6.k, V.C.6.l and V.C.6.m. These instances are deviations from the emission limitations (including operating limits), work practice standards, and operation and maintenance requirements of 40 CFR Part 63, Subpart CCCCC. These deviations must be reported according to the requirements in conditions V.C.5.m through V.C.5.q below. [§2103.12.h.6; 2103.12.k; §63.7336(a)]

j. During periods of startup, shutdown, and malfunction, the permittee must operate in accordance with your startup, shutdown, and malfunction plan. [§2103.12.h.6; §2103.12.k; §63.7336(b)]

1) Consistent with §63.6(e) and 63.7(e)(1), deviations that occur during a period of startup, shutdown, or malfunction are not violations if the permittee demonstrates to the Department's satisfaction that the permittee was operating in accordance with the startup, shutdown, and malfunction plan.
2) The Department will determine whether deviations that occur during a period of startup, shutdown, or malfunction are violations, according to the provisions in §63.6(e).

k. The permittee shall submit all of the notifications in §63.6(h)(4) and (5), 63.7(b) and (c), 63.8(e) and (f)(4), and 63.9(b) through (h) that apply by the specified dates. [§2103.12.h.6; §2103.12.k; §63.7340(a)]

l. The permittee shall submit a notification of intent to conduct a performance test at least 60 calendar days before the performance test is scheduled to begin as required in §63.7(b)(1). [§2103.12.h.6; §2103.12.k; §63.7340(d)]

proposed

m. The permittee must submit quarterly compliance reports for battery stacks to the Department in accordance with General Condition III.15 above. All quarterly compliance reports for battery stacks must be postmarked or delivered no later than one calendar month following the end of the quarterly reporting period. [§2103.12.h.6; §2103.12.k; §63.7341(a)]

n. Each quarterly report must provide information on compliance with the emission limitations for battery stacks in condition V.C.1.t above. The reports must include the information in Conditions in V.C.5.o.1) through V.C.5.o.3) and as applicable, Conditions V.C.5.o.4) through V.C.5.o.8) above below. [§2103.12.h.6; §2103.12.j; §63.7341(b)]

o. Each semiannual compliance report must provide information on compliance with the emission limitations, work practice standards, and operation and maintenance requirements for all affected sources except battery stacks. The reports must include the information in V.C.5.o.1) through V.C.5.o.3) below, and as applicable, Conditions V.C.5.o.4) through V.C.5.o.8) below. [§2103.12.h.6; §2103.12.j; §63.7341(c)]

1) Company name and address.
2) Statement by a responsible official, with the official's name, title, and signature, certifying the truth, accuracy, and completeness of the content of the report.
3) Date of report and beginning and ending dates of the reporting period.
4) If there was a startup, shutdown, or malfunction during the reporting period and the permittee took actions consistent with the startup, shutdown, and malfunction plan, the compliance report must include the information in §63.10(d)(5)(i).
5) If there were no deviations from the continuous compliance requirements in V.C.3.i above for battery stacks, a statement that there were no deviations from the emission limitations during the reporting period.
6) If there were no periods during which a continuous monitoring system (including COMS, continuous emission monitoring system (CEMS), or CPMS) was out-of-control as specified in §63.8(c)(7), a statement that there were no periods during which a continuous monitoring system was out-of-control during the reporting period.
7) For each deviation from an emission limitation in 40 CFR 63, Subpart CCCCC and for each deviation from the requirements for work practice standards in this 40 CFR Part 63, Subpart CCCCC that occurs at an affected source where the permittee is not using a continuous monitoring system (including a COMS, CEMS, or CPMS) to comply with the emission limitations in this subpart, the compliance report must contain the information in Conditions V.C.5.o.4), V.C.5.o.7)A V.C.5.o.7)A and V.C.5.o.7)B below. This includes periods of startup, shutdown, and malfunction.
   A. The total operating time of each affected source during the reporting period.
   B. Information on the number, duration, and cause of deviations (including unknown cause, if applicable) as applicable and the corrective action taken.

8) For each deviation from an emission limitation occurring at an affected source where the permittee is using a continuous monitoring system (including COMS, CEMS, or CPMS) to comply with the emission limitation 40 CFR 63, Subpart CCCCC, the permittee must include the information in Conditions V.C.5.o.4) above and V.C.5.o.8)A V.C.5.o.8)A through V.C.5.o.8)L below. This includes periods of startup, shutdown, and malfunction.
   A. The date and time that each malfunction started and stopped.
   B. The date and time that each continuous monitoring system (including COMS, CEMS, or CPMS) was inoperative, except for zero (low-level) and high-level checks.
   C. The date, time, and duration that each continuous monitoring system (including COMS,

proposed

CEMS, or CPMS) was out-of-control, including the information in §63.8(c)(8).

D. The date and time that each deviation started and stopped, and whether each deviation occurred during a period of startup, shutdown, or malfunction or during another period.
E. A summary of the total duration of the deviation during the reporting period and the total duration as a percent of the total source operating time during that reporting period.
F. A breakdown of the total duration of the deviations during the reporting period into those that are due to startup, shutdown, control equipment problems, process problems, other known causes, and other unknown causes.
G. A summary of the total duration of continuous monitoring system downtime during the reporting period and the total duration of continuous monitoring system downtime as a percent of the total source operating time during the reporting period.
H. An identification of each HAP that was monitored at the affected source.
I. A brief description of the process units.
J. A brief description of the continuous monitoring system.
K. The date of the latest continuous monitoring system certification or audit.
L. A description of any changes in continuous monitoring systems, processes, or controls since the last reporting period.

p. If the permittee had a startup, shutdown, or malfunction during the semiannual reporting period that was not consistent with the startup, shutdown, and malfunction plan, the permittee must submit an immediate startup, shutdown, and malfunction report according to the requirements in §63.10(d)(5)(ii). [§2103.12.h.6; §2103.12.j; §63.7341(d)]

q. If the permittee submits a compliance report for an affected source along with, or as part of, the semiannual monitoring report required by 40 CFR 70.6(a)(3)(iii)(A), and the compliance report includes all the required information concerning deviations from any emission limitation or work practice standard in 40 CFR Part 63, Subpart CCCCC, submission of the compliance report satisfies any obligation to report the same deviations in the semiannual monitoring report. However, submission of a compliance report does not otherwise affect any obligation the permittee may have to report deviations from permit requirements to the Department. [§2103.12.h.6; §2103.12.j; §63.7341(e)]

6. Work Practice Standards:

a. At no time shall the permittee operate Coke Oven Batteries 13, 14, and 15 unless they are properly operated and maintained according to good engineering and air pollution control practices by performing regular maintenance with the exception of actions to mitigate emergency conditions. [RACT IP 0052-I020b, V.D.1.b; RACT Order No. 234, Condition 1.1; 25 Pa Code §129.99; §2103.12.a.2.B]

b. The permittee shall comply with the provisions of the applicable workpractice requirements in Site level Condition IV.29.a above [§2103.12.h.6; §63.306]

c. The permittee shall develop and implement according to Condition V.C.6.d below, a written startup, shutdown, and malfunction plan that describes procedures for operating the battery, including associated air pollution control equipment, during a period of a startup, shutdown, or malfunction in a manner consistent with good air pollution control practices for minimizing emissions, and procedures for correcting malfunctioning process and air pollution control equipment as quickly as practicable. All the provisions of Site Level Condition IV.9 above remain applicable and are not superceded by operating in accordance with the startup, shutdown, and

proposed

malfunction plan. [§2103.12.h.6; §63.310(b)]

d. During a period of startup, shutdown, or malfunction the permittee shall: [§2103.12.h.6; §63.310(c)]
   1) Operate the battery (including associated air pollution control equipment) in accordance with the procedure specified in the startup, shutdown, and malfunction plan; and
   2) Correct malfunctions as soon as practicable after their occurrence, in accordance with the plan.

e. In order for the provisions of Condition V.C.6.j below to apply with respect to the observation (or set of observations) for a particular day, notification of a startup, shutdown, or a malfunction shall be made by the permittee: [§2103.12.h.6; §63.310(d)]

   1) If practicable, to the certified observer if the observer is at the facility during the occurrence; or
   2) To the Department, in writing, within 24 hours of the occurrence first being documented by a company employee, and if the notification under Condition V.C.6.e.1) above was not made, an explanation of why no such notification was made.

f. Within 14 days of the notification made under Condition V.C.6.e above, or after a startup or shutdown, the permittee shall submit a written report to the Department that: [§2103.12.h.6; §63.310(e)]

   1) Describes the time and circumstances of the startup, shutdown, or malfunction; and
   2) Describes actions taken that might be considered inconsistent with the startup, shutdown, or malfunction plan.

g. The permittee shall maintain a record of internal reports which form the basis of each malfunction notification under Condition V.C.6.e above . [§2103.12.h.6; §63.310(f)]

h. To satisfy the requirements of §63.310 to develop a startup, shutdown, and malfunction plan, the permittee may use the standard operating procedures manual for the battery, provided the manual meets all the requirements in §63.310 and is made available for inspection at reasonable times when requested by the Department. [§2103.12.h.6; §63.310(g)]

i. The Department may require reasonable revisions to a startup, shutdown, and malfunction plan, if the Department finds that the plan: [§2103.12.h.6; §63.310(h)]

   1) Does not address a startup, shutdown, or malfunction event that has occurred;
   2) Fails to provide for the operation of the source (including associated air pollution control equipment) during a startup, shutdown, or malfunction event in a manner consistent with good air pollution control practices for minimizing emissions; or
   3) Does not provide adequate procedures for correcting malfunctioning process and/or air pollution control equipment as quickly as practicable.

j. If the permittee demonstrates to the satisfaction of the Department that a startup, shutdown, or malfunction has occurred, then an observation occurring during such startup, shutdown, or malfunction shall not: [§2103.12.h.6; §63.310(i)]

   1) Constitute a violation of relevant requirements of 40 CFR 63, Subpart L;
   2) Be used in any compliance determination under §63.309; or

proposed

3) Be considered for purposes of Conditions IV.29 above, until the Department has resolved the claim that a startup, shutdown, or malfunction has occurred. If the Department determines that a startup, shutdown, or malfunction has not occurred, such observations may be used for purposes of Conditions IV.29 above, regardless of whether the permittee further contests such determination. The permittee's receipt of written notification from the Department that a startup, shutdown, or malfunction has not occurred will serve, where applicable under Conditions IV.29 above, as written notification from the certified observer that an exceedance has occurred.

k. The permittee shall prepare and operate at all times according to a written work practice plan for soaking. Each plan must include measures and procedures to: [§2103.12.h.6; §63.7294(a)]

1) Train topside workers to identify soaking emissions that require corrective actions.
2) Damper the oven off the collecting main prior to opening the standpipe cap.
3) Determine the cause of soaking emissions that do not ignite automatically, including emissions that result from raw coke oven gas leaking from the collecting main through the damper, and emissions that result from incomplete coking.
4) If soaking emissions are caused by leaks from the collecting main, take corrective actions to eliminate the soaking emissions. Corrective actions may include, but are not limited to, reseating the damper, cleaning the flushing liquor piping, using aspiration, putting the oven back on the collecting main, or igniting the emissions.
5) If soaking emissions are not caused by leaks from the collecting main, notify a designated responsible party. The responsible party must determine whether the soaking emissions are due to incomplete coking. If incomplete coking is the cause of the soaking emissions, the permittee must put the oven back on the collecting main until it is completely coked or the permittee must ignite the emissions.

l. As provided in §63.6(g), the permittee may request to use an alternative to the work practice standard for soaking in Condition V.C.6.k above. [§2103.12.h.6; §63.7294(b)]

m. The permittee shall be in compliance with the emission limitations, work practice standards, and operation and maintenance requirements of 40 CFR 63, Subpart CCCCC at all times, except during periods of startup, shutdown, and malfunction as defined in §63.2. [§2103.12.h.6; §63.7310(a)]

7. Additional Requirements:

The definitions in 40 CFR 63.7352 are hereby incorporated into this permit by reference

PERMIT SHIELD IN EFFECT

proposed

D. Battery No. 13, 14 and 15 Pushing Emission Control (PEC) System: P052

Process Description: Moveable hood with stationary baghouse
Facility ID: P052
Max. Design Rate: 125,000 acfm @ 125ºF
Capacity: 125,000 acfm @ 125ºF
Raw Materials: NA
Control Device: Pulse-jet baghouse

1. Restrictions:

a. The permittee shall not operate, or allow to be operated, Battery 13 or Battery 14 or Battery 15 coke ovens unless there is installed on each battery a pushing emission control system baghouse which is designed to reduce fugitive emissions from pushing to the minimum attainable through the use of BACT, nor shall the permittee operate, or allow to be operated Battery 13 or Battery 14 or Battery 15 coke ovens in such manner that: [§2105.21.e; Installation Permit 0052-I008]

1) At any time, the particulate mass emission rate from the pushing emission control system device, for Battery 13, 14 and 15 exceeds a rate determined by an outlet concentration of 0.040 pounds per ton of coke; [§2105.21.e.1; Installation Permit 0052-I008]

2) Fugitive pushing emissions or emissions from the pushing emission control system device outlet equal or exceed an opacity of 20% at any time, except if the Department determines in writing, upon written application from the person responsible for the coke ovens setting forth all information needed to make such determination, that such emissions are of only minor significance with respect to causing air pollution and do not prevent or interfere with the attainment or maintenance of any ambient air quality standard (any such determination shall be submitted as a proposed revision to Allegheny County's portion of the SIP). [§2105.21.e.4; Installation Permit 0052-I008.]

b. The permittee shall not operate, or allow to be operated at any time, coke oven batteries in such manner that the hot coke fails to be held under the hood of the pushing emission control device for at least 67 seconds immediately after the pusher ram begins to move and the damper to the PEC device is opened or for at least 15 seconds immediately following the fall of the last of the coke into the hot car, whichever is longer. This provision shall only be effective during the period from 30 days following the issuance of written notice by the Department to the permittee of such battery that EPA has required the implementation of the contingency measures under the portion of the PM-10 SIP for the Liberty Borough/Clairton area, until issuance of a written notice by the Department that such measures are no longer required. [§2105.21.e.6]

c. The permittee shall not operate, or allow to be operated Battery 13 or Battery 14 or Battery 15, unless the Battery 13, 14 and 15 PEC System baghouse is properly installed, operated and maintained according to the following conditions: [§2105.03; Installation Permit 0052-I008]

1) Emissions due to the pushing of Battery 13, 14 and 15 coke ovens shall be vented through the PEC System baghouse dust collector.
2) The baghouse shall be equipped with automatic cleaning controls and instrumentation that shall continuously measure the differential pressure drop across the baghouse to within 5.0% of the measuring span of the device.
3) The normal operating differential pressure drop range across each baghouse module shall be

proposed

maintained below 10 inches w.c. averaged over the push.

4) When the pressure drop goes beyond the range specified in Condition V.D.1.c.3) above, cleaning, maintenance and other corrective actions shall be conducted, as necessary, to return the pressure drop to the specified range.

d. The permittee shall not discharge to the atmosphere emissions of particulate matter from a control device applied to pushing emissions from a coke oven battery that exceed 0.02 pound per ton (lb/ton) of coke: [§2103.12.h.6; §63.7290(a)]

e. For each PEC System the permittee shall: [§2103.12.h.6; §63.7290(b)(3)]

1) Maintain the minimum daily average fan motor amperes at 210 or above the minimum level established during the most recent performance test; or
2) Maintain the daily average volumetric flow rate at the inlet of the control device at or above the minimum level established during the initial performance test.

f. For each control device applied to pushing emissions and subject to the emission limit in V.D.1.d above, the permittee shall demonstrate continuous compliance by meeting the requirements in Conditions V.D.1.f.1) and V.D.1.f.2) below: [§2103.12.h.6; §63.7333 (a)]

1) Maintaining emissions of particulate matter at or below 0.02 pound per ton (lb/ton) of coke; and
2) Conducting subsequent performance tests to demonstrate continuous compliance no less frequently than once every two years.

g. Emissions from Battery 13, 14 and 15 PEC System baghouse shall not exceed the limits listed in Table V-D-1 at any time: [§2105.03; IP 0052-I008; SO_2 SIP IP 0052-I017, Condition V.B.1.c]

TABLE V-D-1 - Emission Limitations for Batteries 13, 14 & 15 PEC System Baghouse

POLLUTANT	LBS/TON-COKE	HOURLY EMISSION LIMIT (lb/hr)	ANNUAL EMISSION LIMIT (tons/year)*
Particulate Matter	0.040	5.80	25.40
PM_{10}	0.040	5.80	25.40
SO_2**		7.46	32.67

*A year is defined as any consecutive 12-month period.
**SO_2 limit is based on SO_2 SIP IP 0052-I017. The limits are combined for all the three (3) batteries

h. Batteries 13, 14 & 15 compliance with the Coke MACT emission limit in Condition V.D.1.d above, assures compliance with the PM/PM_{10} emission limit in Condition V.D.1.g above. [§2103.12.h.6]

proposed

i. SO_2 emissions from the batteries hot car shall not exceed the limitations in Table V-D-2 below: [§2105.21.h.4; SO_2 SIP IP 0052-I017, Condition V.B.1.c]

TABLE V-D-2– SO_2 Emission Limitations for Batteries 13-15 Hot Car

POLLUTANT**	HOURLY EMISSION LIMIT (lb/hr)	ANNUAL EMISSION LIMIT (tons/year)*
SO_2	11.21	49.10

*A year is defined as any consecutive 12-month period
**These limits are based on ACHD's SO_2 State Implementation Plan (SIP) Permit Revision and USEPA SO_2 Guidance dated September 14, 2017.

2. Testing Requirements:

a. The permittee shall have baghouse emission stack tests for PM, PM_{10} and $PM_{2.5}$ conducted at least once every two years using EPA Methods No.1 through No.5, 201A and 202 (or other method specified by the Department) and performed according to §2108.02 of Article XXI. [§2108.02; Installation Permit 0052-I008; §63.7321]

b. The permittee shall perform or cause to be performed PEC baghouse emission stack tests for SO_2 at least once every two years in accordance with approved EPA methods and performed according to §2108.02 of Article XXI. [§2108.02; SO_2 SIP IP 0052-I017, Condition V.B.2.b]

c. Visible emissions observations of the baghouse stack exhaust and fugitive pushing emissions shall be conducted at least once every two years, as specified in Section 109 of the Department's source testing manual, and be done simultaneously with the baghouse stack tests. [§2108.02; Installation Permit 0052-I008]

d. The permittee shall conduct each performance test according to the requirements in Condition V.D.2.e below. [§2103.12.h.6; §63.7322(a)]

e. To determine compliance with the process weighted mass rate of particulate matter (lb/ton of coke) in Condition V.D.1.d above use the following test methods and procedures: [§2103.12.h.6; §63.7322(b)]

1) Determine the concentration of particulate matter according to the following test methods in Appendix A to 40 CFR Part 60. [§2103.12.h.6; §63.7322(b)(1)]

A. Method 1 to select sampling port locations and the number of traverse points. Sampling sites must be located at the outlet of the control device and prior to any releases to the atmosphere.
B. Method 2, 2F, or 2G to determine the volumetric flow rate of the stack gas.
C. Method 3, 3A, or 3B to determine the dry molecular weight of the stack gas.
D. Method 4 to determine the moisture content of the stack gas.
E. Method 5 or 5D, as applicable, to determine the concentration of front half particulate matter in the stack gas.

2) During each particulate matter test run, sample only during periods of actual pushing when the capture system fan and control device are engaged. Collect a minimum sample volume of 50 dry standard cubic feet of gas during each test run. Three valid test runs are needed to comprise

proposed

a performance test. Each run must start at the beginning of a push and finish at the end of a push (i.e., sample for an integral number of pushes). [§2103.12.h.6; §63.7322(b)(2)]

3) Determine the total combined weight in tons of coke pushed during the duration of each test run according to the procedures in the source test plan for calculating coke yield from the quantity of coal charged to an individual oven. [§2103.12.h.6; §63.7322(b)(3)]

4) Compute the process-weighted mass emissions (E_p) for each test run using the following equation: [§2103.12.h.6; §63.7322(b)(4)]

$$Ep = \frac{C \times Q \times T}{P \times K}$$

Where:

E_p = Process weighted mass emissions of particulate matter, lb/ton;
C = Concentration of particulate matter, gr/dscf;
Q = Volumetric flow rate of stack gas, dscf/hr;
T = Total time during a run that a sample is withdrawn from the stack during pushing, hr;
P = Total amount of coke pushed during the test run, tons; and
K = Conversion factor, 7,000 gr/lb.

f. For each capture system applied to pushing emissions, the permittee shall establish a site-specific operating limit for the fan motor amperes or volumetric flow rate according to the procedures in Condition V.D.2.f.1) or V.D.2.f.2) below: [§2103.12.h.6; §63.7323(c)]

1) If the operating limit in V.D.1.e.1) above for fan motor amperes is elected, the permittee shall measure and record the fan motor amperes during each push sampled for each particulate matter test run. The operating limit is the lowest fan motor amperes recorded during any of the three runs that meet the emission limit.
2) If the operating limit in V.D.1.e.2) above for volumetric flow rate is elected, the permittee shall measure and record the total volumetric flow rate at the inlet of the control device during each push sampled for each particulate matter test run. The operating limit is the lowest volumetric flow rate recorded during any of the three runs that meet the emission limit.

g. The permittee may change the operating limit for a capture system if the requirements in Conditions V.D.2.g.1) through 3) below are met: [§2103.12.h.6; §63.7323(e)]

1) Submit a written notification to the Department of the request to conduct a new performance test to revise the operating limit.
2) Conduct a performance test to demonstrate that emissions of particulate matter from the control device do not exceed the applicable limit in §63.7290(a).
3) Establish revised operating limits according to the applicable procedures in Condition V.D.2.f above.

h. The Department reserves the right to require additional emissions testing sufficient to assure compliance with the terms and conditions of this permit. Such testing shall be performed in accordance with Site Level Condition IV.14 above and Article XXI §2108.02. [§2103.12.h.1]

proposed

3. Monitoring Requirements:

a. The permittee shall continuously monitor and record the differential pressure drop across each baghouse module. [§2103.12.h.1; §2103.12.i; Installation Permit 0052-I008]

b. The permittee shall inspect the Battery 13, 14 and 15 PEC System baghouse, weekly, to insure compliance with Condition V.D.1.c above. [§2103.12.i; Installation Permit 0052-I008]

c. The permittee shall record the number of pushes per day and the amount of coal charged daily for each Battery Unit. [§2103.12.i; SO_2 SIP IP 0052-I017, Condition V.B.3.b]

d. The permittee shall meet each of the following requirements for each coke oven battery: [§2103.12.i; §63.7291(a)]

1) Observe and record the opacity of fugitive pushing emissions from each oven at least once every 90 days. If an oven cannot be observed during a 90-day period due to circumstances that were not reasonably avoidable, the permittee must observe the opacity of the first push of that oven following the close of the 90-day period that is capable of being observed in accordance with the procedures in §63.7334(a), and the permittee must document why the oven was not observed within a 90-day period. All opacity observations of fugitive pushing emissions for batteries with vertical flues must be made using the procedures in §63.7334(a).

2) Observe and record the opacity of fugitive pushing emissions for at least four consecutive pushes per battery each day. Exclude any push during which the observer's view is obstructed or obscured by interferences and observe the next available push to complete the set of four pushes. If necessary due to circumstances that were not reasonably avoidable, the permittee may observe fewer than four consecutive pushes in a day; however, the permittee must observe and record as many consecutive pushes as possible and document why four consecutive pushes could not be observed. The permittee may observe and record one or more non-consecutive pushes in addition to any consecutive pushes observed in a day.

3) Do not alter the pushing schedule to change the sequence of consecutive pushes to be observed on any day. Keep records indicating the legitimate operational reason for any change in the pushing schedule which results in a change in the sequence of consecutive pushes observed on any day.

4) If the average opacity for any individual push exceeds 30 percent opacity for any short battery or 35 percent opacity for any tall battery, the permittee must take corrective action and/or increase coking time for that oven. The permittee must complete corrective action or increase coking time within either 10 calendar days or the number of days determined using the following equation, whichever is greater:

$$X = 0.55 \times Y$$

Where:
X = Number of calendar days allowed to complete corrective action or increase coking time; and
Y = Current coking time for the oven, hours.

proposed

For the purpose of determining the number of calendar days allowed under this equation, day one is the first day following the day the permittee observed an opacity in excess of 30 percent for any short battery or 35 percent for any tall battery. Any fraction produced by this equation must be counted as a whole day. Days during which the oven is removed from service are not included in the number of days allowed to complete corrective action.

5) The permittee shall demonstrate that:

A. The corrective action and/or increased coking time was successful. After a period of time no longer than the number of days allowed in condition V.D.3.d.4) above, observe and record the opacity of the first two pushes for the oven capable of being observed using the procedures in §63.7334(a). The corrective action and/or increased coking time was successful if the average opacity for each of the two pushes is 30 percent or less for a short battery or 35 percent or less for a tall battery. If the corrective action and/or increased coking time was successful, the permittee may return the oven to the 90-day reading rotation described in condition V.D.3.d.1) above. If the average opacity of either push exceeds 30 percent for a short battery or 35 percent for a tall battery, the corrective action and/or increased coking time was unsuccessful, and the permittee must complete additional corrective action and/or increase coking time for that oven within the number of days allowed in condition V.D.3.d.4) above.

B. After implementing any additional corrective action and/or increased coking time required under condition V.D.3.d.5)A above or V.D.3.d.6)B below, the permittee must demonstrate that corrective action and/or increased coking time was successful. After a period of time no longer than the number of days allowed in condition V.D.3.d.4) above, the permittee must observe and record the opacity of the first two pushes for the oven capable of being observed using the procedures in §63.7334(a). The corrective action and/or increased coking time was successful if the average opacity for each of the two pushes is 30 percent or less for a short battery or 35 percent or less for a tall battery. If the corrective action and/or increased coking time was successful, the permittee may return the oven to the 90-day reading rotation described in condition V.D.3.d.1) above. If the average opacity of either push exceeds 30 percent for a short battery or 35 percent for a tall battery, the corrective action and/or increased coking time was unsuccessful, and the permittee must follow the procedures in condition V.D.3.d.5)C below.

C. If the corrective action and/or increased coking time was unsuccessful as described in condition V.D.3.d.5)B above, the permittee must repeat the procedures in condition V.D.3.d.5)B above until the corrective action and/or increased coking time is successful. The permittee must report to the Department as a deviation each unsuccessful attempt at corrective action and/or increased coking time under condition V.D.3.d.5)B above.

6) If at any time the permittee places an oven on increased coking time as a result of fugitive pushing emissions that exceed 30 percent for a short battery or 35 percent for a tall battery, the permittee must keep the oven on the increased coking time until the oven qualifies for decreased coking time using one of the following procedures:

A. To qualify for a decreased coking time for an oven placed on increased coking time in accordance with condition V.D.3.d.4) or V.D.3.d.5) above, the permittee must operate the oven on the decreased coking time. After no more than two coking cycles on the decreased coking time, the permittee must observe and record the opacity of the first two pushes that are capable of being observed using the procedures in §63.7334(a). If the average opacity

proposed

for each of the two pushes is 30 percent or less for a short battery or 35 percent or less for a tall battery, the permittee may keep the oven on the decreased coking time and return the oven to the 90-day reading rotation described in condition V.D.3.d.1) above. If the average opacity of either push exceeds 30 percent for a short battery or 35 percent for a tall battery, the attempt to qualify for a decreased coking time was unsuccessful. The permittee must then return the oven to the previously established increased coking time, or implement other corrective action(s) and/or increased coking time. If the permittee implements other corrective action and/or a coking time that is shorter than the previously established increased coking time, the permittee must follow the procedures in paragraph V.D.3.d.5)B above to confirm that the corrective action(s) and/or increased coking time was successful.

B. If the attempt to qualify for decreased coking time was unsuccessful as described in condition V.D.3.d.6)A above, the permittee may again attempt to qualify for decreased coking time for the oven. To do this, the permittee must operate the oven on the decreased coking time. After no more than two coking cycles on the decreased coking time, the permittee must observe and record the opacity of the first two pushes that are capable of being observed using the procedures in §63.7334(a). If the average opacity for each of the two pushes is 30 percent or less for a short battery or 35 percent or less for a tall battery, the permittee may keep the oven on the decreased coking time and return the oven to the 90-day reading rotation described in condition V.D.3.d.1) above. If the average opacity of either push exceeds 30 percent for a short battery or 35 percent for a tall battery, the attempt to qualify for a decreased coking time was unsuccessful. The permittee must then return the oven to the previously established increased coking time, or implement other corrective action(s) and/or increased coking time. If the permittee implements other corrective action and/or a coking time that is shorter than the previously established increased coking time, the permittee must follow the procedures in condition V.D.3.d.5)B above to confirm that the corrective action(s) and/or increased coking time was successful.

C. The permittee must report to the Department as a deviation the second and any subsequent consecutive unsuccessful attempts on the same oven to qualify for decreased coking time as described in condition V.D.3.d.6)B above.

e. As provided in §63.6(g), the permittee may request to use an alternative to the work practice standards in Condition V.D.3.d above. [§2103.12.h.6; §2103.12.i; §63.7291(b)]

f. The permittee shall prepare and operate at all times according to a written operation and maintenance plan for each capture system and control device applied to pushing emissions from coke battery(s). Each plan must address at a minimum the following elements. [§2103.12.h.6; §2103.12.i; §63.7300(c)]

1) Monthly inspections of the equipment that are important to the performance of the total capture system (e.g., pressure sensors, dampers, and damper switches). This inspection must include observations of the physical appearance of the equipment (e.g., presence of holes in ductwork or hoods, flow constrictions caused by dents or accumulated dust in ductwork, and fan erosion). In the event a defect or deficiency is found in the capture system (during a monthly inspection or between inspections), the permittee must complete repairs within 30 days after the date that the defect or deficiency is discovered. If the permittee determines that the repairs cannot be completed within 30 days, the permittee must submit a written request for an extension of time to complete the repairs that must be received by the Department not more than 20 days after the date that the defect or deficiency is discovered. The request must contain a description of

proposed

the defect or deficiency, the steps needed and taken to correct the problem, the interim steps being taken to mitigate the emissions impact of the defect or deficiency, and a proposed schedule for completing the repairs. The request shall be deemed approved unless and until such time as the Department notifies the permittee that it objects to the request. The Department may consider all relevant factors in deciding whether to approve or deny the request (including feasibility and safety). Each approved schedule must provide for completion of repairs as expeditiously as practicable, and the Department may request modifications to the proposed schedule as part of the approval process.

2) Preventative maintenance for each control device, including a preventative maintenance schedule that is consistent with the manufacturer's instructions for routine and long-term maintenance.

3) Corrective action for all baghouses applied to pushing emissions. In the event a bag leak detection system alarm is triggered, the permittee must initiate corrective action to determine the cause of the alarm within 1 hour of the alarm, initiate corrective action to correct the cause of the problem within 24 hours of the alarm, and complete the corrective action as soon as practicable. Actions may include, but are not limited to:
   A. Inspecting the baghouse for air leaks, torn or broken bags or filter media, or any other condition that may cause an increase in emissions.
   B. Sealing off defective bags or filter media.
   C. Replacing defective bags or filter media or otherwise repairing the control device.
   D. Sealing off a defective baghouse compartment.
   E. Cleaning the bag leak detection system probe, or otherwise repairing the bag leak detection system.
   F. Shutting down the process producing the particulate emissions

g. For the PEC system baghouse applied to pushing emissions from a coke oven battery, the permittee shall at all times monitor the relative change in particulate matter loadings using a bag leak detection system according to the requirements in V.D.3.h below and conduct inspections at their specified frequency according to the following requirements: [§2103.12.h.6; §2103.12.i; §63.7330(a)]

1) Monitor the pressure drop across each baghouse cell each day to ensure pressure drop is within the normal operating range identified in the manual;
2) Confirm that dust is being removed from hoppers through weekly visual inspections or equivalent means of ensuring the proper functioning of removal mechanisms;
3) Check the compressed air supply for pulse-jet baghouses each day;
4) Monitor cleaning cycles to ensure proper operation using an appropriate methodology;
5) Check bag cleaning mechanisms for proper functioning through monthly visual inspection or equivalent means;
6) Make monthly visual checks of bag tension on reverse air and shaker-type baghouses to ensure that bags are not kinked (kneed or bent) or laying on their sides. The permittee does not have to make this check for shaker-type baghouses using self-tensioning (spring-loaded) devices;
7) Confirm the physical integrity of the baghouse through quarterly visual inspections of the baghouse interior for air leaks; and
8) Inspect fans for wear, material buildup, and corrosion through quarterly visual inspections, vibration detectors, or equivalent means.

h. The permittee shall install, operate, and maintain a bag leak detection system on the PEC system

proposed

baghouse according to the following requirements: [§2103.12.h.6; §2103.12.i; §63.7331(a)]

1) The system must be certified by the manufacturer to be capable of detecting emissions of particulate matter at concentrations of 10 milligrams per actual cubic meter (0.0044 grains per actual cubic foot) or less;
2) The system must provide output of relative changes in particulate matter loadings;
3) The system must be equipped with an alarm that will sound when an increase in relative particulate loadings is detected over a preset level. The alarm must be located such that it can be heard by the appropriate plant personnel;
4) Each system that works based on the triboelectric effect must be installed, operated, and maintained in a manner consistent with the guidance document, ``Fabric Filter Bag Leak Detection Guidance'' (EPA-454/R-98-015, September 1997). The permittee may install, operate, and maintain other types of bag leak detection systems in a manner consistent with the manufacturer's written specifications and recommendations;
5) To make the initial adjustment of the system, establish the baseline output by adjusting the sensitivity (range) and the averaging period of the device. Then, establish the alarm set points and the alarm delay time;
6) Following the initial adjustment, do not adjust the sensitivity or range, averaging period, alarm set points, or alarm delay time, except as detailed in the operation and maintenance plan. Do not increase the sensitivity by more than 100 percent or decrease the sensitivity by more than 50 percent over a 365-day period unless a responsible official certifies, in writing, that the baghouse has been inspected and found to be in good operating condition; and
7) Where multiple detectors are required, the system's instrumentation and alarm may be shared among detectors.

i. For each CPMS required inV.D.3.n below, the permittee must develop and make available for inspection upon request by the Department a site-specific monitoring plan that addresses the requirements in Conditions V.D.3.i.1) through V.D.3.i.6) below: [§2103.12.h.6; §2103.12.i §63.7331(b)]

1) Installation of the CPMS sampling probe or other interface at a measurement location relative to each affected process unit such that the measurement is representative of control of the exhaust emissions (e.g., on or downstream of the last control device);
2) Performance and equipment specifications for the sample interface, the parametric signal analyzer, and the data collection and reduction system;
3) Performance evaluation procedures and acceptance criteria (e.g., calibrations);
4) Ongoing operation and maintenance procedures in accordance with the general requirements of §63.8(c)(1), (3), (4)(ii), (7), and (8);
5) Ongoing data quality assurance procedures in accordance with the general requirements of §63.8(d); and
6) Ongoing recordkeeping and reporting procedures in accordance the general requirements of §63.10(c), (e)(1), and (e)(2)(i).

j. The permittee shall conduct a performance evaluation of each CPMS in accordance with the site-specific monitoring plan. [§2103.12.h.6; §2103.12.i; §63.7331(c)]

k. The permittee shall operate and maintain each CPMS in continuous operation according to the site-specific monitoring plan. [§2103.12.h.6; §2103.12.i; §63.7331(d)]

l. If the permittee elects the operating limit in V.D.1.e.1) above for a capture system applied to

proposed

pushing emissions, the permittee must install, operate, and maintain a device to measure the fan motor amperes. §2103.12.h.6; §2103.12.i; §63.7331(h)]

m. If the permittee elects the operating limit in V.D.1.e.2) above for a capture system applied to pushing emissions, the permittee must install, operate, and maintain a device to measure the total volumetric flow rate at the inlet of the control device. [§2103.12.h.6; §2103.12.i; §63.7331(g)]

n. For each capture system applied to pushing emissions, the permittee shall at all times monitor the fan motor amperes according to the requirements in Condition V.D.3.l above or the volumetric flow rate according to the requirements in Condition V.D.3.m above. [§2103.12.h.6; §2103.12.i; §63.7330(d)]

o. Except for monitor malfunctions, associated repairs, and required quality assurance or control activities (including as applicable, calibration checks and required zero and span adjustments), the permittee shall monitor continuously (or collect data at all required intervals) at all times the affected source is operating. [§2103.12.h.6; §2103.12.i; §63.7332(a)]

p. The permittee shall not use data recorded during monitoring malfunctions, associated repairs, and required quality assurance or control activities in data averages and calculations used to report emission or operating levels, or in fulfilling a minimum data availability requirement, if applicable. The permittee shall use all the data collected during all other periods in assessing compliance. A monitoring malfunction is any sudden, infrequent, not reasonably preventable failure of the monitor to provide valid data. Monitoring failures that are caused in part by poor maintenance or careless operation are not malfunctions. [§2103.12.h.6; §2103.12.i; §63.7332(b)]

q. For each capture system applied to pushing emissions and subject to the operating limit in Condition V.D.1.e.1) above, the permittee shall demonstrate continuous compliance by meeting the requirements in Condition V.D.3.q.1) or V.D.3.q.2) below: [§2103.12.h.6; §2103.12.i; §63.7333(d)]

1) If the permittee elects the operating limit for fan motor amperes in V.D.1.e.1) above:

A. Maintaining the daily average fan motor amperes at or above the minimum level established during the initial or subsequent performance test; and
B. Checking the fan motor amperes at least every 8 hours to verify the daily average is at or above the minimum level established during the initial or subsequent performance test and recording the results of each check.

2) If the permittee elects the operating limit for volumetric flow rate in V.D.1.e.2) above:

A. Maintaining the daily average volumetric flow rate at the inlet of the control device at or above the minimum level established during the initial or subsequent performance test; and
B. Checking the volumetric flow rate at least every 8 hours to verify the daily average is at or above the minimum level established during the initial or subsequent performance test and recording the results of each check.

r. The permittee shall demonstrate continuous compliance with the work practice standards for fugitive pushing emissions according to the following requirements: [§2103.12.h.6; §2103.12.i; §63.7334(a)]

proposed

1) Observe and record the opacity of fugitive emissions for four consecutive pushes per operating day, except the permittee may make fewer or non-consecutive observations as permitted by Condition V.D.3.d.2) above. Maintain records of the pushing schedule for each oven and records indicating the legitimate operational reason for any change in the pushing schedule according to Condition V.D.3.d.3) above.
2) Observe and record the opacity of fugitive emissions from each oven in a battery at least once every 90 days. If an oven cannot be observed during a 90-day period, observe and record the opacity of the first push of that oven following the close of the 90-day period that can be read in accordance with the procedures in paragraphs V.D.3.r.1) through V.D.3.r.8).
3) Make all observations and calculations for opacity observations of fugitive pushing emissions in accordance with Method 9 in Appendix A to 40 CFR Part 60 using a Method 9 certified observer unless the permittee has an approved alternative procedure under V.D.3.r.7) below.
4) Record pushing opacity observations at 15-second intervals as required in section 2.4 of Method 9 (Appendix A to 40 CFR Part 60). The requirement in section 2.4 of Method 9 for a minimum of 24 observations does not apply, and the data reduction requirements in section 2.5 of Method 9 do not apply. The requirement in §63.6(h)(5)(ii) for obtaining at least 3 hours of observations (thirty 6-minute averages) to demonstrate initial compliance does not apply.
5) If fewer than six but at least four 15-second observations can be made, use the average of the total number of observations to calculate average opacity for the push. Missing one or more observations during the push (e.g., as the quench car passes behind a building) does not invalidate the observations before or after the interference for that push. However, a minimum of four 15-second readings must be made for a valid observation.
6) Begin observations for a push at the first detectable movement of the coke mass. End observations of a push when the quench car enters the quench tower.
   A. Observe fugitive pushing emissions from a position at least 10 meters from the quench car that provides an unobstructed view and avoids interferences from the topside of the battery. This may require the observer to be positioned at an angle to the quench car rather than perpendicular to it. Typical interferences to avoid include emissions from open standpipes and charging. Observe the opacity of emissions above the battery top with the sky as the background where possible. Record the oven number of any push not observed because of obstructions or interferences.

   B. The permittee may reposition after the push to observe emissions during travel if necessary.

7) If it is infeasible to implement the procedures in Conditions V.D.3.r.1) through V.D.3.r.6) above for an oven due to physical obstructions, nighttime pushes, or other reasons, the permittee may apply to the Department for permission to use an alternative procedure. The application must provide a detailed explanation of why it is infeasible to use the procedures in Conditions V.D.3.r.1) through V.D.3.r.6) above, identify the oven and battery numbers, and describe the alternative procedure. An alternative procedure must identify whether the coke in that oven is not completely coked, either before, during, or after an oven is pushed.
8) For each oven observed that exceeds an opacity of 30 percent for any short battery or 35 percent for any tall battery, the permittee must take corrective action and/or increase the coking time in accordance with Condition V.D.3.d above. Maintain records documenting conformance with Condition V.D.3.d above.

s. For each coke oven battery with a capture system or control device applied to pushing emissions, the permittee shall demonstrate continuous compliance with the operation and maintenance requirements in Condition V.D.3.f above by meeting the following requirements: [§2103.12.j; §2103.12.h.6; §63.7335(b)]

proposed

1) Making monthly inspections of capture systems according to Condition V.D.3.f.1) above and recording all information needed to document conformance with these requirements;
2) Performing preventative maintenance for each control device according to Condition V.D.3.f.2) above and recording all information needed to document conformance with these requirements; and
3) Initiating and completing corrective action for a bag leak detection system alarm according to Condition V.D.3.f.3) above and recording all information needed to document conformance with these requirements. This includes records of the times the bag leak detection system alarm sounds, and for each valid alarm, the time corrective action was initiated, the corrective action(s) taken, and the date on which corrective action is completed.

t. To demonstrate continuous compliance with the operation and maintenance requirements for a baghouse applied to pushing emissions from a coke oven battery in V.D.3.h above, the permittee shall inspect and maintain each baghouse according to the requirements in Conditions V.D.3.h.1) through V.D.3.h.7) above and record all information needed to document conformance with these requirements. If the permittee increases or decreases the sensitivity of the bag leak detection system beyond the limits specified in Condition V.D.3.h.6) above the permittee must include a copy of the required written certification by a responsible official in the next semiannual compliance report. [§2103.12.h.6; §2103.12.i; §63.7335(c)]

4. Record Keeping Requirements:

a. The results of the inspections required by condition V.D.3.b above shall be recorded weekly along with the differential pressure drop across the baghouse. [§2103.12.j; Installation Permit 0052-I008]

b. Episodes of non-compliance with Conditions V.D.1.a through V.D.1.g and V.D.3.b above and corrective actions taken shall be recorded upon occurrence. [§2103.12.j; Installation Permit 0052-I008]

c. The permittee shall keep records of each baghouse maintenance inspection and repair, replacement or other corrective action. [§2103.12.j; Installation Permit 0052-I008]

d. The permittee shall keep the following records: [§2103.12.j; §2103.12.h.6; §63.7342(a)]

1) A copy of each notification and report that was submitted to comply with this subpart, including all documentation supporting any initial notification or notification of compliance status that was submitted, according to the requirements in §63.10(b)(2)(xiv).
2) The records in §63.6(e)(3)(iii) through (v) related to startup, shutdown, and malfunction.
3) Records of performance tests, performance evaluations, and opacity observations as required in §63.10(b)(2)(viii).

e. For each COMS or CEMS, the permittee shall keep the following records. [§2103.12.j; §2103.12.h.6; §63.7342(b)]

1) Records described in §63.10(b)(2)(vi) through (xi).
2) Monitoring data for COMS during a performance evaluation as required in §63.6(h)(7)(i) and (ii).
3) Previous (that is, superceded) versions of the performance evaluation plan as required in §63.8(d)(3).
4) Records of the date and time that each deviation started and stopped and whether the deviation

proposed

occurred during a period of startup, shutdown, or malfunction or during another period.

f. The permittee shall keep the records in §63.6(h)(6) for visual observations. [§2103.12.j; §2103.12.h.6; §63.7342(c)]

g. The permittee shall keep the records required in Conditions V.D.3.s above and V.D.4.kthrough V.D.4.m below to show continuous compliance with each emission limitation, work practice standard, and operation and maintenance requirement that applies. [§2103.12.j; §2103.12.h.6; §63.7342(d)]

h. The permittee shall keep records in a form suitable and readily available for expeditious review, according to §63.10(b)(1). [§2103.12.j; §2103.12.h.6; §63.7343(a)]

i. As specified in §63.10(b)(1), the permittee shall keep each record for 5 years following the date of each occurrence, measurement, maintenance, corrective action, report, or record. [§2103.12.j; §2103.12.h.6; §63.7343(b)]

j. The permittee shall keep each record on site for at least 2 years after the date of each occurrence, measurement, maintenance, corrective action, report, or record, according to §63.10(b)(1). The permittee can keep the records offsite for the remaining 3 years. [§2103.12.j; §2103.12.h.6; §63.7343(c)]

k. The permittee shall inspect and maintain the pushing emission control baghouse as required in V.D.3.h.1) through V.D.3.h.7) above and record all information needed to document conformance with these requirements. If the permittee increases or decreases the sensitivity of the bag leak detection system beyond the limits specified in V.D.3.h.6) above, the permittee must include a copy of the required written certification by a responsible official in the next semiannual compliance report. [§2103.12.j; 63.7335(c)]

l. The permittee shall maintain a current copy of the operation and maintenance plans required in §63.7300(b) and (c) onsite and available for inspection upon request. The plans shall be kept for the life of the affected source or until the affected source is no longer subject to the requirements of 40 CFR Part 63, Subpart CCCCC. [§2103.12.j; 63.7335(d)]

m. All records shall be retained by the facility for at least five (5) years. These records shall be made available to the Department upon request for inspection and/or copying. [§2103.12.j; Installation Permit 0052-I008]

5. Reporting Requirements:

a. The permittee shall report all instances of non-compliance with conditions V.D.1.a through V.D.1.g, V.D.3.a and V.D.3.b above, and V.D.4.a through V.D.4.m above along with all corrective action taken to restore the subject equipment to compliance, to the Department every six months. [§2103.12.k; Installation Permit 0052-I008]

b. Reporting instances of non-compliance in accordance with condition V.D.5.a above does not relieve the permittee of the requirement to report breakdowns in accordance with IV.9 above, if appropriate.[§2103.12.k; Installation Permit 0052-I008]

c. No later than twenty (20) days after the end of each month, a written report of a summary of the

proposed

following during each such month shall be submitted to the Department: [§2103.12.k; §2109.03; Enforcement Order 202.E, 3/28/90]

1) For each individual coke battery or group of batteries served by the same push emission control system, and for all coke batteries combined:

   A. The total number of pushes for the month;
   B. The total number of controlled pushes for the month; and the monthly percentage availability (on-line time) of the pushing control system, based on the total number of pushes and total number of controlled pushes.

2) For each outage of the pushing control system at each individual coke battery or group of batteries served by the same pushing emission control system:

   A. The batteries affected;
   B. The starting and ending dates and times;
   C. The total time of each outage, to the nearest tenth of an hour;
   D. The corresponding Department Breakdown Number; and the reason(s) or cause(s) for the outage.

d. The permittee shall report each instance in which Conditions V.D.1.d, V.D.1.e and V.D.1.f were not met. This includes periods of startup, shutdown, and malfunction. The permittee shall also report each instance in which the permittee did not meet each work practice standard or operation and maintenance requirement in conditions V.D.6.a, V.D.6.b and V.D.6.c. These instances are deviations from the emission limitations (including operating limits), work practice standards, and operation and maintenance requirements of 40 CFR Part 63, Subpart CCCCC. These deviations must be reported according to the requirements in V.D.5.h through V.D.5.k below. [§2103.12.k; §2103.12.h.6; §63.7336(a)]

e. During periods of startup, shutdown, and malfunction, the permittee must operate in accordance with the startup, shutdown, and malfunction plan. [§2103.12.k; §2103.12.h.6; §63.7336(b)]
   1) Consistent with §63.6(e) and 63.7(e)(1), deviations that occur during a period of startup, shutdown, or malfunction are not violations if the permittee demonstrates to the Department's satisfaction that operation was in accordance with the startup, shutdown, and malfunction plan.
   2) The Department will determine whether deviations that occur during a period of startup, shutdown, or malfunction are violations, according to the provisions in §63.6(e).

f. The permittee shall submit all of the notifications in §63.6(h)(4) and (5), 63.7(b) and (c), 63.8(e) and (f)(4), and 63.9(b) through (h) that apply to the permittee by the specified dates. [§2103.12.k; §2103.12.h.6; §63.7340(a)]

g. The permittee shall submit a notification of intent to conduct a performance test at least 60 calendar days before the performance test is scheduled to begin as required in §63.7(b)(1). [§2103.12.k; §2103.12.h.6; §63.7340(d)]

h. The permittee must submit semiannual compliance reports for the PEC stacks to the Department according to the requirements in General Condition III.15 above. All semiannual compliance reports must be postmarked or delivered no later than July 31 or January 31, whichever date is the first date following the end of the semiannual reporting period. [§2103.12.k; §2103.12.h.6; §63.7341(a)]

proposed

i. Each semiannual compliance report must provide information on compliance with the emission limitations, work practice standards, and operation and maintenance requirements for all affected sources except battery stacks. The reports must include the information in V.D.5.i.1) through V.D.5.i.3) below, and as applicable, Conditions V.D.5.i.4) through V.D.5.i.8) below. [§2103.12.k; §2103.12.h.6; §63.7341(c)]

1) Company name and address.
2) Statement by a responsible official, with the official's name, title, and signature, certifying the truth, accuracy, and completeness of the content of the report.
3) Date of report and beginning and ending dates of the reporting period.
4) If there was a startup, shutdown, or malfunction during the reporting period and the permittee took actions consistent with the startup, shutdown, and malfunction plan, the compliance report must include the information in §63.10(d)(5)(i).
5) If there were no deviations from the continuous compliance requirements in Conditions V.D.3.q through V.D.3.s above, a statement that there were no deviations from the emission limitations, work practice standards, or operation and maintenance requirements during the reporting period.
6) If there were no periods during which a continuous monitoring system (including COMS, continuous emission monitoring system (CEMS), or CPMS) was out-of-control as specified in §63.8(c)(7), a statement that there were no periods during which a continuous monitoring system was out-of-control during the reporting period.
7) For each deviation from an emission limitation in 40 CFR 63, Subpart CCCCC and for each deviation from the requirements for work practice standards in this 40 CFR Part 63, Subpart CCCCC that occurs at an affected source where the permittee is not using a continuous monitoring system (including a COMS, CEMS, or CPMS) to comply with the emission limitations in this subpart, the compliance report must contain the information in Conditions V.D.5.i.4), V.D.5.i.7)A and V.D.5.i.7)B below. This includes periods of startup, shutdown, and malfunction.
   A. The total operating time of each affected source during the reporting period.
   B. Information on the number, duration, and cause of deviations (including unknown cause, if applicable) as applicable and the corrective action taken.
8) For each deviation from an emission limitation occurring at an affected source where the permittee is using a continuous monitoring system (including COMS, CEMS, or CPMS) to comply with the emission limitation 40 CFR 63, Subpart CCCCC, the permittee must include the information in Conditions V.D.5.i.4), V.D.5.i.8)A through V.D.5.i.8)L below. This includes periods of startup, shutdown, and malfunction.
   A. The date and time that each malfunction started and stopped.
   B. The date and time that each continuous monitoring system (including COMS, CEMS, or CPMS) was inoperative, except for zero (low-level) and high-level checks.
   C. The date, time, and duration that each continuous monitoring system (including COMS, CEMS, or CPMS) was out-of-control, including the information in §63.8(c)(8).
   D. The date and time that each deviation started and stopped, and whether each deviation occurred during a period of startup, shutdown, or malfunction or during another period.
   E. A summary of the total duration of the deviation during the reporting period and the total duration as a percent of the total source operating time during that reporting period.
   F. A breakdown of the total duration of the deviations during the reporting period into those that are due to startup, shutdown, control equipment problems, process problems, other known causes, and other unknown causes.
   G. A summary of the total duration of continuous monitoring system downtime during the reporting period and the total duration of continuous monitoring system downtime as a

proposed

percent of the total source operating time during the reporting period.

H. An identification of each HAP that was monitored at the affected source.
I. A brief description of the process units.
J. A brief description of the continuous monitoring system.
K. The date of the latest continuous monitoring system certification or audit.
L. A description of any changes in continuous monitoring systems, processes, or controls since the last reporting period.

j. If the permittee had a startup, shutdown, or malfunction during the semiannual reporting period that was not consistent with the startup, shutdown, and malfunction plan, the permittee must submit an immediate startup, shutdown, and malfunction report according to the requirements in §63.10(d)(5)(ii). [§2103.12.k; §2103.12.h.6; §63.7341(d)]

k. If the permittee submits a compliance report for an affected source along with, or as part of, the semiannual monitoring report required by 40 CFR 70.6(a)(3)(iii)(A), and the compliance report includes all the required information concerning deviations from any emission limitation or work practice standard in 40 CFR Part 63, Subpart CCCCC, submission of the compliance report satisfies any obligation to report the same deviations in the semiannual monitoring report. However, submission of a compliance report does not otherwise affect any obligation the permittee may have to report deviations from permit requirements to the Department. [§2103.12.k; §2103.12.h.6; §63.7341(e)]

6. Work Practice Standards:

a. The permittee shall develop and implement a written startup, shutdown, and malfunction plan according to the provisions in 40 CFR 63, Subpart A, §63.6(e)(3). [§2103.12.h.6; §63.7310(c)]

b. As required by §63.6(e)(1)(i), the permittee shall operate and maintain each coke battery including air pollution control and monitoring equipment, in a manner consistent with good air pollution control practices for minimizing emissions at least to the levels required by 40 CFR Part 63, Subpart CCCCC. [§2103.12.h.6; §63.7300(a)]

c. The permittee shall be in compliance with the emission limitations, work practice standards, and operation and maintenance requirements of 40 CFR 63, Subpart CCCCC at all times, except during periods of startup, shutdown, and malfunction as defined in §63.2. [§2103.12.h.6; §63.7310(a)]

d. At no time shall the permittee operate the No. 13, 14, and 15 PEC system unless it is properly operated and maintained according to good engineering and air pollution control practices by performing regular maintenance with the exception of actions to mitigate emergency conditions. [RACT IP 0052-I020b, V.D.1.b; RACT Order No. 234, Condition 1.1; 25 Pa Code §129.99; §2103.12.a.2.B]

7. Additional Requirements

The definitions in 40 CFR 63.7352 are hereby incorporated into this permit by reference.

PERMIT SHIELD IN EFFECT

proposed

E. Coke Oven Batteries Nos. 19 and 20: P010 and P011

Process Description: Coke Oven Batteries 19 and 20 (identical units)
Facility ID'S: P010 and P011
Max. Design Rate: 1,002,290 tons of coal per year per battery
Capacity: 2,004,580 tons of coal per year for batteries 19 and 20
Raw Materials: Coal, supplemented with recycled coke plant materials such as tar decanter sludge, bio sludge, and coke oven gas pipeline material; synfuel; metallurgical coke; petroleum coke; coke breeze; Synfuel additives; recycle tire chips; and bulk density control additives such as diesel fuel.
Control Device: Pushing emission control baghouse (See Emission Unit P053)

1. Restrictions:

a. The permittee shall install, operate and maintain a bypass/bleeder stack flare system in each battery that is capable of controlling 120 percent of the normal gas flow generated by each battery, which shall thereafter be operated and maintained. [§2103.12.h.6; 63.307(a)(1)]

b. Coke oven emissions shall not be vented to the atmosphere through bypass/bleeder stacks, except through the flare system or the alternative control device as described in V.E.1.c below. [§2103.12.h.6.; §63.307(a)(2)]

c. As an alternative to the installation, operation, and maintenance of a flare system as required in Conditions V.E.1.a above and V.E.1.b above, the owner or operator may petition the Administrator and the Department for approval of an alternative control device or system that achieves at least 98 percent destruction or control of coke oven emissions vented to the alternative control device or system. [§2103.12.h.6; 63.307(d)]

d. The emergency bypass/bleeder stack flare system for each battery shall be designed for a net heating value of 240 Btu per standard cubic feet (Btu/scf). [§2103.12.h.6; §63.307(b)(1)]

e. Each flare shall have a continuously operable pilot flame that is present at all times as determined by a thermocouple or any other equivalent device. [§2103.12.h.6; §63.307(b)(2); §63.307(b)(4); §63.309)(h)(2)]

f. The permittee shall not operate, or allow to be operated, coke oven batteries 19 and 20 unless there is installed big plug doors on the coke side of each oven. A big plug door is a door that, when installed, contains a plug with minimum dimensions of 17" minimum width and 16 1/4" minimum depth. [§2105.21.b.5]

g. At all times including periods of startup, shutdown, and malfunction, the permittee shall operate and maintain the coke oven batteries and its pollution control equipment required under 40 CFR 63, Subpart L, in a manner consistent with good air pollution control practices for minimizing emissions to the levels required by any applicable performance standards under Subpart L. Failure to adhere to these requirements shall not constitute a separate violation if a violation of an applicable performance or work practice standard has also occurred. [§2103.12.h.6; §63.310(a)]

h. The permittee shall not operate, or allow to be operated, any source in such manner that unburned coke oven gas is emitted into the open air. In addition, the permittee shall not flare, mix, or combust coke oven gas, or allow such gas to be flared, mixed or combusted unless the gas meets the

proposed

requirements of Site Level Condition IV.33. [§2105.21.h; §2105.21.h.4]

i. Each flare installed to meet the requirements of Conditions V.E.1.a above through V.E.1.e above shall be operated with no visible emissions, as determined by Method 22 in Appendix A of 40 CFR Part 60, except for periods not to exceed a total of 5 minutes during any 2 consecutive hours with an observation period of 2 hours. [§2103.12.h.6; §63.307(c); §63.309(h)(1)]

j. The permittee shall not cause to be discharged or allow to be discharged to the atmosphere coke oven emissions that exceed any of the following emission limitations: [§2103.12.h.6; §63.304(b)(2)(ii)-(iv); §63.304(b)(3)(ii)]

1) 3.3 percent leaking coke oven doors as determined by the procedures in Condition IV.30.c.1) above;
2) 0.4 percent leaking topside port lids, as determined by the procedures in Condition IV.30.c.1) above;
3) 2.5 percent leaking offtake system(s), as determined by the procedures in Condition IV.30.c.1) above; and
4) 12 seconds of visible emissions per charge, as determined by the procedures in Condition IV.30.c.2) above

k. The permittee shall implement the provisions of the work practice plan, required in Condition IV.29 above following the second independent exceedance of the visible emission limitation for the emission point in any consecutive 6-month period, by no later than 3 days after receipt of written notification of the second such exceedance from the certified observer. [§2103.12.h.6; §63.306(c)(1)(i)]

l. The permittee shall not operate, or allow to be operated any No. 19 Battery coke ovens in such manner that the aggregate of visible charging emissions exceeds a total of 75 seconds during any four (4) consecutive charges on such battery. [§2105.21.a.2]

m. The permittee shall not operate, or allow to be operated Coke Oven Battery No. 20 in such manner that the aggregate of visible charging emissions exceeds a total of 55 seconds during any five (5) consecutive charges. [§2105.21.a.1]

n. The permittee shall not operate, or allow to be operated Coke Oven Batteries 19 or 20 in such manner that emissions from the door areas of any coke oven exceed an opacity of 40% at any time 15 or more minutes after such oven has been charged. [§2105.21.b.4]

o. The permittee shall not operate, or allow to be operated Coke Oven Battery No. 19 in such manner that, at any time, there are visible emissions from more than eight percent (8%) of the door areas of the operating coke ovens in such battery, excluding the two door areas of the last oven charged and any door areas obstructed from view. [§2105.21.b.3.G]

p. The permittee shall not operate, or allow to be operated Coke Oven Battery No. 20 in such manner that, at any time, there are visible emissions from more than five percent (5%) of the door areas of the operating coke ovens in such battery, excluding the two door areas of the last oven charged and any door areas obstructed from view. [§2105.21.b.1]

q. The permittee shall not operate, or allow to be operated Coke Oven Battery No. 19 in such manner that, at any time, there are visible emissions from more than two percent (2%) of the charging ports

proposed

or charging port seals on the operating coke ovens of such battery. [§2105.21.c.2]

r. The permittee shall not operate, or allow to be operated Coke Oven Battery No. 20 in such manner that, at any time, there are visible emissions from more than one percent (1%) of the charging ports or charging port seals on the operating coke ovens of such battery. [§2105.21.c.1]

s. The permittee shall not operate, or allow to be operated Coke Oven Battery No. 19 in such manner that, at any time, there are visible emissions from more than five percent (5%) of the offtake piping on the operating coke ovens of such battery. [§2105.21.d.2]

t. The permittee shall not operate, or allow to be operated Coke Oven Battery No. 20 in such manner that, at any time, there are visible emissions from more than four percent (4%) of the offtake piping on the operating coke ovens of such battery. [§2105.21.d.1]

u. The permittee shall not operate, or allow to be operated Coke Oven Batteries 19 or 20 in such manner that visible emissions from the transport of hot coke in the open atmosphere exceed ten percent (10%) opacity at any time. [§2105.21.e.5]

v. The permittee shall install, operate, maintain and calibrate a continuous opacity monitoring system on the combustion stack serving Coke Oven Battery 20. [§2103.12.i; §2103.12.h.6; Enforcement Order No. 161, July 23, 1990]

w. The permittee shall not operate, or allow to be operated, Coke Oven Battery No. 19 in such manner that, at any time, emissions from the combustion stack serving such battery exceed a particulate concentration of 0.030 grains per dry standard cubic foot. [§2105.21.f.2]

x. The permittee shall not operate, or allow to be operated, Coke Oven Battery No. 20 in such manner that, at any time, emissions from the combustion stack serving such battery exceed a particulate concentration of 0.015 grains per dry standard cubic foot. [§2105.21.f.1]

y. The permittee shall not operate, or allow to be operated, Coke Oven Batteries 19 or 20 in such manner that, at any time, emissions from the combustion stack serving each battery equal or exceed an opacity of 20% for a period or periods aggregating in excess of three (3) minutes in any 60 minute period; or equal or exceed an opacity of 60% at any time. [§2105.21.f.3 & 4]

z. The permittee shall not discharge to the atmosphere any emissions from any battery stack that exhibit an opacity greater than the following applicable limits: [§2103.12.h.6; §63.7296(a) and (b)]

1) Daily average of 15 percent opacity for a battery on a normal coking cycle.
2) Daily average of 20 percent opacity for a battery on battery-wide extended coking.

aa. The permittee shall submit a notification of compliance status containing the results of the COMS performance test for battery stacks before the close of business on the 30th calendar days following the completion of the compliance demonstration. For each particulate matter emission limitation that applies, the permittee shall submit a notification of compliance status containing the results of the performance test before the close of business on the 60th calendar days following completion of the performance test according to §63.10(d)(2). [§2103.12.h.6; §63.7326(d)]

proposed

bb. Emissions from Coke Battery No.19 combustion stack shall not exceed the emission limitations in V-E-1. [§2105.21.f.2, §2105.21.h.4; §2103.12.a.2.B]

TABLE V-E-1 - Emission Limitations for Battery No. 19 Combustion Stack

POLLUTANT	HOURLY EMISSION LIMIT (lb/hr)	ANNUAL** EMISSION LIMIT (tons/year)*
PM	25.2	110.2
PM_{10}	25.20	110.2
$PM_{2.5}$	25.2	110.2
NO_X	272.97	1195.62
CO	135.87	595.13
VOC	3.83	16.76

*A year is defined as any consecutive 12-month period.
**NO_X, CO and VOC emissions include combustion stack, soaking, charging, door leaks, lid leaks, offtake leaks, decarbonization

cc. Emissions from Coke Battery No.20 combustion stack shall not exceed the emission limitations in Table V-E-2. [§2105.21.f.1, §2105.21.h.4; §2103.12.a.2.B]

TABLE V-E-2 - Emission Limitations for Battery No. 20 Combustion Stack

POLLUTANT	HOURLY EMISSION LIMIT (lb/hr)	ANNUAL EMISSION LIMIT (tons/year)*
PM	13.4	58.5
PM_{10}	13.4	58.5
$PM_{2.5}$	13.4	58.5
NO_X	272.97	1195.62
CO	135.87	595.12
VOC	3.82	16.74

*A year is defined as any consecutive 12-month period.
**NO_X, CO and VOC emissions include combustion stack, soaking, charging, door leaks, lid leaks, offtake leaks, decarbonization

proposed

dd. SO_2 emissions from Batteries No.19 & 20 combustion stack shall not exceed the limitations in Table V-E-3 below: [§2105.21.h; SO_2 SIP IP 0052-I017, Condition V.A.1.b]

TABLE V-E-3 – SO_2 Emission Limitations for Batteries No. 19, & No.20 Combustion Stack

Process	Thirty-day (30-day) Emission Limit* (lb/hr)	Supplementary 24-hr Emission Limit** (lb/hr)[1]	Annual Emission Limit (tons/year)[1]
Battery 19 Underfiring	29.37	33.09	128.64
Battery 20 Underfiring	27.00	30.42	118.26

*Limits are based on a rolling 30-day average of 24-hour (calendar day) averages, with an additional restriction of no more than 3 consecutive days above a supplementary 24-hour limit. These limits are based on ACHD's SO_2 State Implementation Plan (SIP) Permit Revision and USEPA SO_2 Guidance dated September 14, 2017.

**Tons/year value is used to demonstrate the expected tons/year from this unit. The value is derived by converting the 30-day rolling average limit lb/hr to an annual tons per year value. These limits are based on ACHD's SO_2 State Implementation Plan (SIP) Permit Revision and USEPA SO_2 Guidance dated September 14, 2017.

2. Testing Requirements:

a. The permittee shall have PM, $PM_{2.5}$ and PM_{10} emissions stack tests performed on the combustion stacks of Coke Battery 19 and Battery 20 at least once every two 2) years to demonstrate compliance with the mass emission standard in V.E.1.w and V.E.1.x above. Particulate emission tests shall be conducted according to the methodology specified in 40 CFR 60, Appendix A, Methods 1 through 5, 201A and 202 (or other method specified). The permittee shall submit a stack test protocol to the Department at least 45 days prior to the test dates. During each stack test performed, simultaneous visible emission evaluations shall be conducted according to the methodology specified in 40 CFR 60, Appendix A, Method 9, except for the provisions of Section 2.5 of Method 9. [§2108.02.b; §2108.02.e; Second Consent Decree, 6/24/1993]

b. The permittee shall have sulfur dioxide (SO_2) emissions stack tests performed on the combustion stacks of Coke Batteries 19 and 20 at least once every two years to demonstrate compliance with the mass emission limitations for each combustion stack in Condition V.E.1.dd above, respectively. SO_2 emission tests shall be conducted according to Method 6, 6A, 6B, or 6C specified in 40 CFR 60, Appendix A. The permittee shall submit a sta ck test protocol to the Department at least 45 days prior to the test dates. [§2108.02.b; SO_2 SIP IP 0052-I017, Condition V.A.2.a]

c. Emissions of SO_2 shall be determined by converting the H_2S grain loading of the fuel burned and the fuel flow rate to pounds per hour to determine compliance with the emission limitations of condition V.E.1.dd above. [§2103.12.h.1; SO_2 SIP IP 0052-I017, Condition V.A.2.b]

d. The permittee shall perform emissions testing for NO_X, CO and VOC on each combustion stack of Coke Batteries 19 and 20 at least once every two years to demonstrate compliance with the mass emission limitation for each combustion stack in Conditions V.E.1.bb and V.E.1.cc above. Testing for NO_X, CO and VOC shall be conducted at least once every two years in accordance with approved EPA Methods (Method 7, 7A, 7B, 7C, 7D or 7E, Method 10, 10A or 10B and Method 18) in Appendix A of 40 CFR Part 60, Article XXI §2108.02, and as approved by the Department. The permittee shall submit a stack test protocol to the Department for approval at least 45 days prior to the test dates. [§2105.06.b.4.B; §2103.12.h.1; §2108.02.b; §2108.02.e.]

proposed

e. The permittee shall comply with the provisions of the applicable performance tests and procedure requirements in Site level Condition IV.30 above. [§63.309; §2103.12.h.1]

f. The Department reserves the right to require additional emissions testing sufficient to assure compliance with the terms and conditions of this permit. Such testing shall be performed in accordance with Site Level Condition IV.14 above and Article XXI §2108.02. [§2103.12.h.1]

3. Monitoring Requirements:

a. The permittee shall: [§2103.12.i; §2103.12.h.6; §63.308]

1) Inspect the collecting main for leaks at least once daily according to the procedures in Method 303 in 40 CFR Part 63, Appendix A [§2103.12.i; §2103.12.h.6; §63.308(a)];
2) Record the time and date a leak in the collecting main is first observed, the time and date the leak is temporarily sealed, and the time and date of repair [§2103.12.i §2103.12.h.6; §63.308(b)];
3) Temporarily seal any leak in the collecting main as soon as possible after detection, but no later than 4 hours after detection of the leak [§2103.12.i; §2103.12.h.6; §63.308(c)]; and
4) Initiate a collecting main repair as expeditiously as possible, but no later than 5 calendar days after initial detection of the leak. The repair shall be completed within 15 calendar days after initial detection of the leak unless an alternative schedule is approved by the Department [§2103.12.i; §2103.12.h.6; §63.308(d)].

b. The permittee shall prepare and operate at all times according to a written operation and maintenance plan for the general operation and maintenance of all coke oven batteries. Each plan must address, at a minimum, the following elements: [§2103.12.i; §2103.12.h.6; §63.7300(b)]

1) Frequency and method of recording underfiring gas parameters.
2) Frequency and method of recording battery operating temperature, including measurement of individual flue and cross-wall temperatures.
3) Procedures to prevent pushing an oven before it is fully coked.
4) Procedures to prevent overcharging and undercharging of ovens, including measurement of coal moisture, coal bulk density, and procedures for determining volume of coal charged.
5) Frequency and procedures for inspecting flues, burners, and nozzles.
6) Schedule and procedures for the daily washing of baffles

c. The permittee shall monitor at all times the opacity of emissions exiting each coke oven battery stack using a COMS according to the requirements in V.E.3.f below or §63.7331(j). [§2103.12.i; §2103.12.h.6; §63.7330(e)]

d. The permittee shall conduct a performance evaluation of each CPMS in accordance with the site-specific monitoring plan. [§2103.12.i; §2103.12.h.6; §63.7331(c)]

e. The permittee shall operate and maintain each CPMS in continuous operation according to the site-specific monitoring plan. [§2103.12.i; §2103.12.h.6; §63.7331(d)]

f. For each coke oven battery, the permittee shall install, operate, and maintain a COMS to measure and record the opacity of emissions exiting each stack according to the requirements in Conditions V.E.3.f.1) through V.E.3.f.5) below: [§2103.12.i; §2103.12.h.6; §63.7331(j)]

proposed

1) Install, operate, and maintain each COMS according to the requirements in §63.8(e) and Performance Specification 1 in 40 CFR Part 60, Appendix B. Identify periods when the COMS is out-of-control, including any periods that the COMS fails to pass a daily calibration drift assessment, quarterly performance audit, or annual zero alignment audit.
2) Conduct a performance evaluation of each COMS according to the requirements in §63.8 and Performance Specification 1 in Appendix B to 40 CFR Part 60;
3) Develop and implement a quality control program for operating and maintaining each COMS according to the requirements in §63.8(d). At minimum, the quality control program must include a daily calibration drift assessment, quarterly performance audit, and an annual zero alignment audit of each COMS;
4) Each COMS must complete a minimum of one cycle of sampling and analyzing for each successive 10-second period and one cycle of data recording for each successive 6-minute period. The permittee must reduce the COMS data as specified in §63.8(g)(2).
5) Determine and record the hourly and daily (24-hour) average opacity according to the procedures in §63.7324(b) using all the 6-minute averages collected for periods during which the COMS is not out-of-control.

g. Except for monitor malfunctions, associated repairs, and required quality assurance or control activities (including as applicable, calibration checks and required zero and span adjustments), the permittee shall monitor continuously (or collect data at all required intervals) at all times the affected source is operating. [§2103.12.i; §2103.12.h.6; §63.7332(a)]

h. The permittee shall not use data recorded during monitoring malfunctions, associated repairs, and required quality assurance or control activities in data averages and calculations used to report emission or operating levels, or in fulfilling a minimum data availability requirement, if applicable. The permittee shall use all the data collected during all other periods in assessing compliance. A monitoring malfunction is any sudden, infrequent, not reasonably preventable failure of the monitor to provide valid data. Monitoring failures that are caused in part by poor maintenance or careless operation are not malfunctions. [§2103.12.i; §2103.12.h.6; §63.7332(b)]

i. The permittee shall demonstrate continuous compliance for each by-product coke oven battery subject to the opacity limit for stacks in Condition V.E.1.z above by meeting the requirements in Conditions V.E.3.i.1) through V.E.3.i.2) below: [§2103.12.i; §2103.12.h.6; §63.7333(e)]
1) Maintaining the daily average opacity at or below 15 percent for a battery on a normal coking cycle or 20 percent for a battery on battery-wide extended coking; and
2) Operating and maintaining a COMS and collecting and reducing the COMS data according to Condition V.E.3.f above.

4. Record Keeping Requirements:

a. The permittee shall maintain files of all required information in a permanent form suitable for inspection at an onsite location for at least 1 year and must thereafter be accessible within 3 working days to the Department for a period of five years. Copies of the work practice plan developed under Condition IV.29 above and the startup, shutdown, and malfunction plan developed under Conditions V.E.6.c through V.E.6.d below shall be kept onsite at all times. The permittee shall maintain the following information: [§2103.12.j; §2103.12.h.6; §63.311(f)]

1) A copy of the work practice plan required by Condition IV.29 above and any revision to the plan;
2) If the permittee is required under Condition IV.29.c above to implement the provisions of a

proposed

work practice plan for a particular emission point, the following records regarding the implementation of plan requirements for that emission point during the implementation period;

A. Copies of all written and audiovisual materials used in the training, the dates of each class, the names of the participants in each class, and documentation that all appropriate personnel have successfully completed the training required under Condition IV.29.b.1) above;
B. The records required to be maintained by the plan provisions implementing Condition IV.29.b.7) above;
C. Records resulting from audits of the effectiveness of the work practice program for the particular emission point, as required in Conditions IV.29.b.3)A, IV.29.b.4)A, IV.29.b.5)A or IV.29.b.6)A above; and
D. If the plan provisions for coke oven doors must be implemented, records of the inventory of doors and jambs as required under Condition IV.29.b.3)F above; and

3) The design drawings and engineering specifications for the bypass/bleeder stack flare system or approved alternative control device or system as required under Conditions V.E.1.a through V.E.1.e above.
4) Records specified in Condition V.E.6.g below regarding the basis of each malfunction notification.

b. The permittee shall keep the following records: [§2103.12.j; §2103.12.h.6; §63.7342(a)]

1) A copy of each notification and report that was submitted to comply with this subpart, including all documentation supporting any initial notification or notification of compliance status that was submitted, according to the requirements in §63.10(b)(2)(xiv).
2) The records in §63.6(e)(3)(iii) through (v) related to startup, shutdown, and malfunction.
3) Records of performance tests, performance evaluations, and opacity observations as required in §63.10(b)(2)(viii).

c. For each COMS or CEMS, the permittee shall keep the following records. [§2103.12.j; §2103.12.h.6; §63.7342(b)]

1) Records described in §63.10(b)(2)(vi) through (xi).
2) Monitoring data for COMS during a performance evaluation as required in §63.6(h)(7)(i) and (ii).
3) Previous (that is, superceded) versions of the performance evaluation plan as required in §63.8(d)(3).
4) Records of the date and time that each deviation started and stopped and whether the deviation occurred during a period of startup, shutdown, or malfunction or during another period.

d. The permittee shall keep the records in §63.6(h)(6) for visual observations. [§2103.12.j; §2103.12.h.6; §63.7342(c)]

e. As specified in §63.10(b)(1), the permittee shall keep each record for 5 years following the date of each occurrence, measurement, maintenance, corrective action, report, or record. [§2103.12.j; §2103.12.h.6; §63.7343(b)]

f. The permittee shall keep each record on site for at least 2 years after the date of each occurrence, measurement, maintenance, corrective action, report, or record, according to §63.10(b)(1). The permittee can keep the records offsite for the remaining 3 years. [§2103.12.j; §2103.12.h.6; §63.7343(c)]

proposed

g. The permittee must demonstrate continuous compliance with the operation and maintenance requirements in V.E.3.b above by adhering at all times to the plan requirements and recording all information needed to document conformance. [§2103.12.j; 63.7335(a)]

h. The permittee shall maintain a current copy of the operation and maintenance plans required in §63.7300(b) and (c) onsite and available for inspection upon request. The plans shall be kept for the life of the affected source or until the affected source is no longer subject to the requirements of 40 CFR Part 63, Subpart CCCCC. [§2103.12.j; 63.7335(d)]

i. The permittee must demonstrate continuous compliance to the work practice standard for soaking in V.E.6.k below, by maintaining records that document conformance with requirements in V.E.6.k.1) through V.E.6.k.5) below. [§2103.12.j; §2103.12.h.6; §63.7334(d)]

5. Reporting Requirements:

a. No later than twenty (20) days after the end of each month, a written report of a summary of the following during each such month shall be submitted to the Department: [§2103.12.k; §2109.03; Enforcement Order 202.E, 3/28/90]

1) For all coke batteries combined, the daily average for the month of:
   A. Coal charged, in tons;
   B. Coke produced, in tons;
   C. Total coke oven gas produced; in MMCF;
   D. Quench water used, in gallons;
   E. Elemental sulfur produced, in tons;
   F. Sulfur content of coal, in percent; and
   G. Sulfur content of coke, in percent.

2) For all periods during which contaminated quench water was used:
   A. The batteries affected;
   B. The starting and ending dates and times;
   C. The total time of each period, and total for the month, to the nearest tenth of an hour;
   D. The corresponding Department Breakdown Number;
   E. The average flow rates of contaminated water to both the quench towers and the water treatment plant during the period, each in gallons per minute; and
   F. The reason(s) or cause(s) for each period.

b. No later than twenty (20) days after the end of each month, a written report of a summary of the following for Coke Battery No. 20 combustion stack continuous opacity monitoring system, during each such month shall be submitted to the Department: [§2103.12.k; Enforcement Order No. 161, July 23, 1990]

1) The monthly average percent availability (on-line time), based on total minutes of coke operations and total minutes available;
2) The daily percentage available;
3) The number of days on which there was less than 100% availability;
4) For each of the coke oven combustion stack visible emission standards set forth in §2105.21.f.3 & f.4, the total number of hours for the month, and the number of hours each day, during which an exceedance of such standard was measured by such continuous opacity monitor;
5) The number and nature of tests, calibrations, and any other quality assurance activities performed; and

proposed

6) The dates, times and results of all such activities.

c. The permittee shall include the following information in the semiannual compliance certification: [§2103.12.k; §2103.12.h.6; §63.311(d)]

1) Certification, signed by the permittee, that no coke oven gas was vented, except through the bypass/bleeder stack flare system during the reporting period or that a venting report has been submitted according to the requirements in Condition V.E.5.e below.
2) Certification, signed by the permittee, that a startup, shutdown, or malfunction event did not occur for a coke oven battery during the reporting period or that a startup, shutdown, and malfunction event did occur and a report was submitted according to the requirements in Condition V.E.6.f below; and
3) Certification, signed by the permittee, that work practices were implemented if applicable under Condition IV.29 above.

d. The permittee shall report any venting of coke oven gas through a bypass/bleeder stack that was not vented through the bypass/bleeder stack flare system to the Department as soon as practicable but no later than 24 hours after the beginning of the event. A written report shall be submitted within 30 days of the event and shall include a description of the event and, if applicable, a copy of the notification for a hazardous substance release required pursuant to 40 CFR §302.6 as set forth in battery NESHAP. [§2103.12.k; §2103.12.h.6; §63.311(e)]

e. In order for the provisions of §63.310(i) to apply with respect to the observation (or set of observations) for a particular day, notification of a startup, shutdown, or a malfunction shall be made by the permittee as follows: [§2103.12.k; §2103.12.h.6; §63.310(d)]

1) If practicable, to the certified observer if the observer is at the facility during the occurrence; or
2) To the Department, in writing, within 24 hours of the occurrence first being documented by a company employee, and if the notification was not made, an explanation of why no such notification was made.

f. Within 14 days of the notification startup, shutdown, or a malfunction, the permittee shall submit a written report to the Department that: [§2103.12.k; §2103.12.h.6; §63.310(e)]

1) Describes the time and circumstances of the startup, shutdown, or malfunction; and
2) Describes actions taken that might be considered inconsistent with the startup, shutdown, or malfunction plan.

g. The permittee shall submit a written quarterly report within thirty (30) days after the close of each calendar quarter to the Department. The quarterly reports shall contain, at minimum the list of every clock hour in the calendar quarter that compliance is not achieved for Article XXI opacity limits applicable to Batteries 19 & 20 combustion stacks as measured by the combustion stacks continuous opacity monitor (COM). U.S. Steel shall indicate the date, time, root cause, and ovens that are believed to have contributed to the exceedance. [§2103.12.k]

h. The permittee shall submit a written quarterly report within thirty (30) days after the close of each calendar quarter to the Department. The quarterly reports shall contain, at minimum, the following: [§2103.12.k].

1) A list of heating walls that have been replaced and put back into service along with the

proposed

corresponding completion and startup dates;
2) A list of heating walls currently out of service for replacement;
3) A list of heating walls planned to be taken out of service for replacement during the subsequent quarter.

i. The permittee shall submit to the Department a Semi-Annual Deviation Reports for all deviations from Article XXI §2105.21(e)(4) and (e)(5) for Batteries 19 & 20. [§2103.12.k]

j. The permittee shall report each instance in which each emission limitation in Conditions V.E.1.z and V.E.1.aa was not met. This includes periods of startup, shutdown, and malfunction. The permittee shall also report each instance in which the permittee did not meet each work practice standard or operation and maintenance requirement in Conditions V.E.6.k, V.E.6.l and V.E.6.m.These instances are deviations from the emission limitations (including operating limits), work practice standards, and operation and maintenance requirements of 40 CFR Part 63, Subpart CCCCC. These deviations must be reported according to the requirements in V.E.5.n through V.E.5.r below. [§2103.12.k; §2103.12.h.6; §63.7336(a)]

k. During periods of startup, shutdown, and malfunction, the permittee must operate in accordance with the startup, shutdown, and malfunction plan. [§2103.12.k; §2103.12.h.6; §63.7336(b)]

1) Consistent with §63.6(e) and 63.7(e)(1), deviations that occur during a period of startup, shutdown, or malfunction are not violations if the permittee demonstrates to the Department's satisfaction that operation was in accordance with the startup, shutdown, and malfunction plan.
2) The Department will determine whether deviations that occur during a period of startup, shutdown, or malfunction are violations, according to the provisions in §63.6(e).

l. The permittee shall submit all of the notifications in §63.6(h)(4) and (5), 63.7(b) and (c), 63.8(e) and (f)(4), and 63.9(b) through (h) that apply by the specified dates. [§2103.12.k; §2103.12.h.6; §63.7340(a)]

m. The permittee shall submit a notification of intent to conduct a performance test at least 60 calendar days before the performance test is scheduled to begin as required in §63.7(b)(1). [§2103.12.k; §2103.12.h.6; §63.7340(d)]

n. The permittee must submit quarterly compliance reports for battery stacks to the Department in accordance with General Condition III.15 above. All quarterly compliance reports for battery stacks must be postmarked or delivered no later than one calendar month following the end of the quarterly reporting period. [§2103.12.k; §2103.12.h.6; §63.7341(a)]

o. Each quarterly report must provide information on compliance with the emission limitations for battery stacks in V.E.1.z above. The reports must include the information in Conditions V.E.5.p.1) through V.E.5.p.3) below, and as applicable, Condition V.E.5.p.4) through V.E.5.p.8) below. [§2103.12.k; §2103.12.h.6; §63.7341(b)]

p. Each semiannual compliance report must provide information on compliance with the emission limitations, work practice standards, and operation and maintenance requirements for all affected sources except battery stacks. The reports must include the information in V.E.5.p.1) through V.E.5.p.3) below, and as applicable, Conditions V.E.5.p.4) through V.E.5.p.8) below. [§2103.12.k; §2103.12.h.6; §63.7341(c)]

1) Company name and address.

proposed

2) Statement by a responsible official, with the official's name, title, and signature, certifying the truth, accuracy, and completeness of the content of the report.
3) Date of report and beginning and ending dates of the reporting period.
4) If there was a startup, shutdown, or malfunction during the reporting period and the permittee took actions consistent with the startup, shutdown, and malfunction plan, the compliance report must include the information in §63.10(d)(5)(i).
5) If there were no deviations from the continuous compliance requirements in V.E.3.i above for battery stacks, a statement that there were no deviations from the emission limitations during the reporting period.
6) If there were no periods during which a continuous monitoring system (including COMS, continuous emission monitoring system (CEMS), or CPMS) was out-of-control as specified in §63.8(c)(7), a statement that there were no periods during which a continuous monitoring system was out-of-control during the reporting period.
7) For each deviation from an emission limitation in 40 CFR 63, Subpart CCCCC and for each deviation from the requirements for work practice standards in this 40 CFR Part 63, Subpart CCCCC that occurs at an affected source where the permittee is not using a continuous monitoring system (including a COMS, CEMS, or CPMS) to comply with the emission limitations in this subpart, the compliance report must contain the information in Conditions V.E.5.p.4), V.E.5.p.7)A and V.E.5.p.7)B below. This includes periods of startup, shutdown, and malfunction.
   A. The total operating time of each affected source during the reporting period.
   B. Information on the number, duration, and cause of deviations (including unknown cause, if applicable) as applicable and the corrective action taken.
8) For each deviation from an emission limitation occurring at an affected source where the permittee using a continuous monitoring system (including COMS, CEMS, or CPMS) to comply with the emission limitation 40 CFR 63, Subpart CCCCC, the permittee must include the information in Conditions V.E.5.p.4), V.E.5.p.8)A through V.E.5.p.8)L below. This includes periods of startup, shutdown, and malfunction.
   A. The date and time that each malfunction started and stopped.
   B. The date and time that each continuous monitoring system (including COMS, CEMS, or CPMS) was inoperative, except for zero (low-level) and high-level checks.
   C. The date, time, and duration that each continuous monitoring system (including COMS, CEMS, or CPMS) was out-of-control, including the information in §63.8(c)(8).
   D. The date and time that each deviation started and stopped, and whether each deviation occurred during a period of startup, shutdown, or malfunction or during another period.
   E. A summary of the total duration of the deviation during the reporting period and the total duration as a percent of the total source operating time during that reporting period.
   F. A breakdown of the total duration of the deviations during the reporting period into those that are due to startup, shutdown, control equipment problems, process problems, other known causes, and other unknown causes.
   G. A summary of the total duration of continuous monitoring system downtime during the reporting period and the total duration of continuous monitoring system downtime as a percent of the total source operating time during the reporting period.
   H. An identification of each HAP that was monitored at the affected source.
   I. A brief description of the process units.
   J. A brief description of the continuous monitoring system.
   K. The date of the latest continuous monitoring system certification or audit.
   L. A description of any changes in continuous monitoring systems, processes, or controls since the last reporting period.

proposed

q. If the permittee had a startup, shutdown, or malfunction during the semiannual reporting period that was not consistent with the startup, shutdown, and malfunction plan, the permittee must submit an immediate startup, shutdown, and malfunction report according to the requirements in §63.10(d)(5)(ii). [§2103.12.k; §2103.12.h.6; §63.7341(d)]

r. If the permittee submits a compliance report for an affected source along with, or as part of, the semiannual monitoring report required by 40 CFR 70.6(a)(3)(iii)(A), and the compliance report includes all the required information concerning deviations from any emission limitation or work practice standard in 40 CFR Part 63, Subpart CCCCC, submission of the compliance report satisfies any obligation to report the same deviations in the semiannual monitoring report. However, submission of a compliance report does not otherwise affect any obligation the permittee may have to report deviations from permit requirements to the Department. [§2103.12.k; §2103.12.h.6; §63.7341(e)]

6. Work Practice Standards:

a. At no time shall the permittee operate Coke Oven Batteries 19 and 20 unless they are properly operated and maintained according to good engineering and air pollution control practices by performing regular maintenance with the exception of actions to mitigate emergency conditions. [RACT IP 0052-I020b, V.D.1.b; RACT Order No. 234, Condition 1.1; 25 Pa Code §129.99; §2103.12.a.2.B]

b. The permittee shall comply with the provisions of the applicable workpractice requirements in Site level Condition IV.29.a above [§2103.12.h.6; §63.306]

c. The permittee shall develop and implement according to Condition V.E.6.d below, a written startup, shutdown, and malfunction plan that describes procedures for operating the battery, including associated air pollution control equipment, during a period of a startup, shutdown, or malfunction in a manner consistent with good air pollution control practices for minimizing emissions, and procedures for correcting malfunctioning process and air pollution control equipment as quickly as practicable. All the provisions of Site Level Condition IV.9 above remain applicable and are not superceded by operating in accordance with the startup, shutdown, and malfunction plan. [§2103.12.h.6; §63.310(b)]

d. During a period of startup, shutdown, or malfunction the permittee shall: [§2103.12.h.6; §63.310(c)]

1) Operate the battery (including associated air pollution control equipment) in accordance with the procedure specified in the startup, shutdown, and malfunction plan; and
2) Correct malfunctions as soon as practicable after their occurrence, in accordance with the plan.

e. In order for the provisions of Condition V.E.6.j below to apply with respect to the observation (or set of observations) for a particular day, notification of a startup, shutdown, or a malfunction shall be made by the permittee: [§2103.12.h.6; §63.310(d)]

1) If practicable, to the certified observer if the observer is at the facility during the occurrence; or
2) To the Department, in writing, within 24 hours of the occurrence first being documented by a company employee, and if the notification under Condition V.E.6.j below was not made, an explanation of why no such notification was made.

proposed

f. Within 14 days of the notification made under Condition V.E.6.e above, or after a startup or shutdown, the permittee shall submit a written report to the Department that: [§2103.12.h.6; §63.310(e)]

1) Describes the time and circumstances of the startup, shutdown, or malfunction; and
2) Describes actions taken that might be considered inconsistent with the startup, shutdown, or malfunction plan.

g. The permittee shall maintain a record of internal reports which form the basis of each malfunction notification under Condition V.E.6.e above. [§2103.12.h.6; §63.310(f)]

h. To satisfy the requirements of §63.310 to develop a startup, shutdown, and malfunction plan, the permittee may use the standard operating procedures manual for the battery, provided the manual meets all the requirements in §63.310 and is made available for inspection at reasonable times when requested by the Department. [§2103.12.h.6; §63.310(g)]

i. The Department may require reasonable revisions to a startup, shutdown, and malfunction plan, if the Department finds that the plan: [§2103.12.h.6; §63.310(h)]

1) Does not address a startup, shutdown, or malfunction event that has occurred;
2) Fails to provide for the operation of the source (including associated air pollution control equipment) during a startup, shutdown, or malfunction event in a manner consistent with good air pollution control practices for minimizing emissions; or
3) Does not provide adequate procedures for correcting malfunctioning process and/or air pollution control equipment as quickly as practicable.

j. If the permittee demonstrates to the satisfaction of the Department that a startup, shutdown, or malfunction has occurred, then an observation occurring during such startup, shutdown, or malfunction shall not: [§2103.12.h.6; §63.310(i)]

1) Constitute a violation of relevant requirements of 40 CFR 63, Subpart L;
2) Be used in any compliance determination under Conditions V.E.6.c through V.E.6.j above; or
3) Be considered for purposes of Condition IV.29 above, until the Department has resolved the claim that a startup, shutdown, or malfunction has occurred. If the Department determines that a startup, shutdown, or malfunction has not occurred, such observations may be used for purposes of Condition IV.29 above regardless of whether the permittee further contests such determination. The permittee's receipt of written notification from the Department that a startup, shutdown, or malfunction has not occurred will serve, where applicable under Condition IV.29 above, as written notification from the certified observer that an exceedance has occurred.

k. The permittee shall prepare and operate at all times according to a written work practice plan for soaking. Each plan must include measures and procedures to: [§2103.12.h.6; §63.7294(a)]

1) Train topside workers to identify soaking emissions that require corrective actions.
2) Damper the oven off the collecting main prior to opening the standpipe cap.
3) Determine the cause of soaking emissions that do not ignite automatically, including emissions that result from raw coke oven gas leaking from the collecting main through the damper, and emissions that result from incomplete coking.

proposed

4) If soaking emissions are caused by leaks from the collecting main, take corrective actions to eliminate the soaking emissions. Corrective actions may include, but are not limited to, reseating the damper, cleaning the flushing liquor piping, using aspiration, putting the oven back on the collecting main, or igniting the emissions.
5) If soaking emissions are not caused by leaks from the collecting main, notify a designated responsible party. The responsible party must determine whether the soaking emissions are due to incomplete coking. If incomplete coking is the cause of the soaking emissions, the permittee must put the oven back on the collecting main until it is completely coked or the permittee must ignite the emissions.

l. As provided in §63.6(g), the permittee may request to use an alternative to the work practice standard for soaking in Condition V.E.6.k above. [§2103.12.h.6; §63.7294(b)]

m. The permittee shall be in compliance with the emission limitations, work practice standards, and operation and maintenance requirements of 40 CFR 63, Subpart CCCCC at all times, except during periods of startup, shutdown, and malfunction as defined in §63.2. [§2103.12.h.6; §63.7310(a)]

7. Additional Requirements:

a. The definitions in 40 CFR 63.7352 are hereby incorporated into this permit by reference.

PERMIT SHIELD IN EFFECT

proposed

F. Battery No. 19 and 20 Pushing Emission Control (PEC) System: P053

Process Description: Moveable hood with stationary baghouse
Facility ID: P053
Max. Design Rate: 115,780 acfm @ 89ºF
Capacity: 115,780 acfm @ 89ºF
Raw Materials: NA
Control Device: Pulse-jet baghouse

1. Restrictions:

a. The permittee shall not operate, or allow to be operated, Battery 19 or Battery 20 coke ovens unless there is installed on each battery a pushing emission control system baghouse which is designed to reduce fugitive emissions from pushing to the minimum attainable through the use of BACT, nor shall the permittee operate, or allow to be operated Battery 19 or Battery 20 coke ovens in such manner that: [§2105.21.e; Installation Permit 0052-I005a]

1) At any time, the particulate mass emission rate from the pushing emission control system device, for Battery No. 19 exceeds a rate determined by an outlet concentration of 0.010 grains per dry standard cubic foot; [§2105.21.e.2; Installation Permit 0052-I005a]

2) At any time, the particulate mass emission rate from the pushing emission control system device, for Battery No. 20 exceeds a rate determined by an outlet concentration of 0.04 pounds per ton of coke: [§2105.21.e.3; Installation Permit 0052-I005a.]

3) Fugitive pushing emissions or emissions from the pushing emission control system device outlet equal or exceed an opacity of 20% at any time, except if the Department determines in writing, upon written application from the person responsible for the coke ovens setting forth all information needed to make such determination, that such emissions are of only minor significance with respect to causing air pollution and do not prevent or interfere with the attainment or maintenance of any ambient air quality standard (any such determination shall be submitted as a proposed revision to Allegheny County's portion of the SIP). [§2105.21.e.4; Installation Permit 0052-I005a]

b. The permittee shall not operate, or allow to be operated at any time, coke oven batteries in such manner that the hot coke fails to be held under the hood of the pushing emission control device for at least 67 seconds immediately after the pusher ram begins to move and the damper to the PEC device is opened or for at least 15 seconds immediately following the fall of the last of the coke into the hot car, whichever is longer. This provision shall only be effective during the period from 30 days following the issuance of written notice by the Department to the permittee of such battery that EPA has required the implementation of the contingency measures under the portion of the PM-10 SIP for the Liberty Borough/Clairton area, until issuance of a written notice by the Department that such measures are no longer required. [§2105.21.e.6]

c. The permittee shall not operate, or allow to be operated Battery 19 or Battery 20 unless the Battery 19 and 20 PEC System baghouse is properly installed, operated and maintained according to the following conditions, at all times: [§2105.03; Installation Permit 0052-I005a]

1) Emissions due to the pushing of Battery 19 and 20 coke ovens shall be vented through the PEC System baghouse dust collector.

proposed

2) The baghouse shall be equipped with automatic cleaning controls and instrumentation that shall continuously measure the differential pressure drop across the baghouse to within 5.0% of the measuring span of the device.
3) The normal operating differential pressure drop range across each baghouse module shall be maintained below 10 inches w.c. averaged over the push
4) When the pressure drop goes beyond the range specified in Condition V.F.1.c.3) above, cleaning, maintenance and other corrective actions shall be conducted, as necessary, to return the pressure drop to the specified range.

d. The permittee shall not discharge to the atmosphere emissions of particulate matter from a control device applied to pushing emissions from a coke oven battery that exceed 0.02 pound per ton (lb/ton) of coke : [§2103.12.h.6; §63.7290(a)]

e. For each PEC System the permittee shall: [§2103.12.h.6; §63.7290(b)(3)]

1) Maintain the minimum daily average fan motor amperes at 217 or above the minimum level established during the most recent performance test; or
2) Maintain the daily average volumetric flow rate at the inlet of the control device at or above the minimum level established during the initial performance test.

f. For each control device applied to pushing emissions and subject to the emission limit in V.F.1.d above, the permittee shall demonstrate continuous compliance by meeting the requirements in Conditions V.F.1.f.1) and V.F.1.f.2) below: [§2103.12.h.6; §63.7333(a)]

1) Maintaining emissions of particulate matter at or below 0.02 pound per ton (lb/ton) of coke if a moveable hood vented to a stationary control device is used to capture emissions; and
2) Conducting subsequent performance tests to demonstrate continuous compliance no less frequently than once every two years.

g. Emissions from Battery 19 and 20 PEC System baghouse shall not exceed the limits listed in Table V-F-1 at any time: [§2105.03; Installation Permit 0052-I005a; SO_2 SIP IP 0052-I017, Condition V.B.1.c]

TABLE V-F-1 Emission Limitations for Battery 19 & 20 PEC System Baghouse

POLLUTANT	GR/DSCF	HOURLY EMISSION LIMIT (lb/hr)	ANNUAL EMISSION LIMIT (tons/year)*
Particulate Matter	0.010	1.67	7.18
PM_{10}	0.010	1.67	7.18
SO_2**		7.78	34.08

*A year is defined as any consecutive 12-month period.
**SO_2 limits are based on SO_2 SIP IP 0052-I017. The limits are for both batteries

h. Battery No. 20 compliance with PM/PM_{10} emission limit in Condition V.F.1.g above, assures compliance with Condition V.F.1.a.2) above. [§2103.12.h]

i. Batteries No. 19 & No. 20 compliance with PM/PM_{10} emission limit in Condition V.F.1.g above assures compliance with the Coke Oven MACT emission limit in Condition V.F.1.d above. [§2103.12.h]

Proposed

j. SO_2 emissions from the batteries hot car shall not exceed the limitations in Table V-F-2 below: [§2105.21.h.4; SO_2 SIP IP 0052-I017, Condition V.B.1.c]

TABLE V-F-2– SO_2 Emission Limitations for Batteries 19-20 Hot Car

POLLUTANT**	HOURLY EMISSION LIMIT (lb/hr)	ANNUAL EMISSION LIMIT (tons/year)*
SO_2	13.73	60.14

*A year is defined as any consecutive 12-month period
**These limits are based on ACHD's SO_2 State Implementation Plan (SIP) Permit Revision and USEPA SO_2 Guidance dated September 14, 2017.

2. Testing Requirements:

a. The permittee shall have baghouse emission stack tests conducted for PM, PM_{10} and $PM_{2.5}$ at least once every two years using EPA Methods No.1 through No.5, 201A and 202 (or other method specified), and performed according to Site Level Condition IV.14. [§2108.02; Installation Permit 0052-I005a; §63.7321]

b. The permittee shall perform or cause to be performed baghouse emission stack tests for SO_2 at least once every two years in accordance with approved EPA methods and performed according to §2108.02 of Article XXI. [§2108.02; SO_2 SIP IP 0052-I017, Condition V.B.2.a]

c. Visible emissions observations of the baghouse stack exhaust and fugitive pushing emissions shall be conducted at least once every two years, as specified in Section 109 of the Department's source testing manual, and be done simultaneously with the baghouse stack tests. [§2108.02; Installation Permit 0052-I005a]

d. The permittee shall conduct each performance test according to the requirements in Condition V.F.2.e below. [§2103.12.h.6; §63.7322(a)]

e. To determine compliance with the process weighted mass rate of particulate matter (lb/ton of coke) in Condition V.F.1.d above use the following test methods and procedures: [§2103.12.h.6; §63.7322(b)]

1) Determine the concentration of particulate matter according to the following test methods in Appendix A to 40 CFR Part 60. [§2103.12.h.6; §63.7322(b)(1)]

A. Method 1 to select sampling port locations and the number of traverse points. Sampling sites must be located at the outlet of the control device and prior to any releases to the atmosphere.
B. Method 2, 2F, or 2G to determine the volumetric flow rate of the stack gas.
C. Method 3, 3A, or 3B to determine the dry molecular weight of the stack gas.
D. Method 4 to determine the moisture content of the stack gas.
E. Method 5 or 5D, as applicable, to determine the concentration of front half particulate matter in the stack gas.

2) During each particulate matter test run, sample only during periods of actual pushing when the capture system fan and control device are engaged. Collect a minimum sample volume of 50 dry standard cubic feet of gas during each test run. Three valid test runs are needed to comprise a performance test. Each run must start at the beginning of a push and finish at the end of a

proposed

push (i.e., sample for an integral number of pushes) [§2103.12.h.6; §63.7322(b)(2)].

3) Determine the total combined weight in tons of coke pushed during the duration of each test run according to the procedures in the source test plan for calculating coke yield from the quantity of coal charged to an individual oven. [§2103.12.h.6; §63.7322(b)(3)]

4) Compute the process-weighted mass emissions (E_p) for each test run using Equation 1 of this section as follows: [§2103.12.h.6; §63.7322(b)(4)]

$$Ep = \frac{C \times Q \times T}{P \times K}$$

Where:

E_p = Process weighted mass emissions of particulate matter, lb/ton;
C = Concentration of particulate matter, gr/dscf;
Q = Volumetric flow rate of stack gas, dscf/hr;
T = Total time during a run that a sample is withdrawn from the stack during pushing, hr;
P = Total amount of coke pushed during the test run, tons; and
K = Conversion factor, 7,000 gr/lb.

f. For each capture system applied to pushing emissions, the permittee shall establish a site-specific operating limit for the fan motor amperes or volumetric flow rate according to the procedures in Condition V.F.2.f.1) or V.F.2.f.2) below: [§2103.12.h.6; §63.7323(c)]

1) If the operating limit in V.F.1.e.1) above for fan motor amperes is elected, the permittee shall measure and record the fan motor amperes during each push sampled for each particulate matter test run. The operating limit is the lowest fan motor amperes recorded during any of the three runs that meet the emission limit.

2) If the operating limit in V.F.1.e.2) above for volumetric flow rate is elected, the permittee shall measure and record the total volumetric flow rate at the inlet of the control device during each push sampled for each particulate matter test run. The operating limit is the lowest volumetric flow rate recorded during any of the three runs that meet the emission limit.

g. The permittee may change the operating limit for a capture system if the requirements in Conditions V.F.2.g.1) through V.F.2.g.3) below are met: [§2103.12.h.6; §63.7323(e)]

1) Submit a written notification to the Department of the request to conduct a new performance test to revise the operating limit.

2) Conduct a performance test to demonstrate that emissions of particulate matter from the control device do not exceed the applicable limit in §63.7290(a).

3) Establish revised operating limits according to the applicable procedures in Condition V.F.2.f above.

h. The Department reserves the right to require additional emissions testing sufficient to assure compliance with the terms and conditions of this permit. Such testing shall be performed in accordance with Site Level Condition IV.14 above and Article XXI §2108.02. [§2103.12.h.1]

3. Monitoring Requirements:

a. The permittee shall continuously monitor and record the differential pressure drop across each

proposed

baghouse module. [§2103.12.i; §2103.12.h.1; §2103.12.i; Installation Permit 0052-I005a]

b. The permittee shall inspect the Battery 19 and 20 PEC System baghouse, weekly, to insure compliance with conditions V.F.1.c above. [§2103.12.i; Installation Permit 0052-I005a]

c. The permittee shall record the number of pushes per day and the amount of coal charged daily for each Battery Unit. [§2103.12.i; SO_2 SIP IP0052-017, Condition V.B.3.b]

d. The permittee shall meet each of the following requirements for each coke oven battery: [§2103.12.i; 63.7291(a)]

1) Observe and record the opacity of fugitive pushing emissions from each oven at least once every 90 days. If an oven cannot be observed during a 90-day period due to circumstances that were not reasonably avoidable, the permittee must observe the opacity of the first push of that oven following the close of the 90-day period that is capable of being observed in accordance with the procedures in §63.7334(a), and the permittee must document why the oven was not observed within a 90-day period. All opacity observations of fugitive pushing emissions for batteries with vertical flues must be made using the procedures in §63.7334(a).
2) Observe and record the opacity of fugitive pushing emissions for at least four consecutive pushes per battery each day. Exclude any push during which the observer's view is obstructed or obscured by interferences and observe the next available push to complete the set of four pushes. If necessary due to circumstances that were not reasonably avoidable, the permittee may observe fewer than four consecutive pushes in a day; however, the permittee must observe and record as many consecutive pushes as possible and document why four consecutive pushes could not be observed. The permittee may observe and record one or more non-consecutive pushes in addition to any consecutive pushes observed in a day.

3) Do not alter the pushing schedule to change the sequence of consecutive pushes to be observed on any day. Keep records indicating the legitimate operational reason for any change in the pushing schedule which results in a change in the sequence of consecutive pushes observed on any day

4) If the average opacity for any individual push exceeds 30 percent opacity for any short battery or 35 percent opacity for any tall battery, the permittee must take corrective action and/or increase coking time for that oven. The permittee must complete corrective action or increase coking time within either 10 calendar days or the number of days determined using the following equation, whichever is greater:

$$X = 0.55 \times Y$$

Where:
X = Number of calendar days allowed to complete corrective action or increase coking time; and
Y = Current coking time for the oven, hours.

For the purpose of determining the number of calendar days allowed under this equation, day one is the first day following the day the permittee observed an opacity in excess of 30 percent for any short battery or 35 percent for any tall battery. Any fraction produced by by this equation must be counted as a whole day. Days during which the oven is removed from service are not included in the number of days allowed to complete corrective action.

proposed

5) The permittee shall demonstrate that:

A. The corrective action and/or increased coking time was successful. After a period of time no longer than the number of days allowed in paragraph V.F.3.d.4) above, observe and record the opacity of the first two pushes for the oven capable of being observed using the procedures in §63.7334(a). The corrective action and/or increased coking time was successful if the average opacity for each of the two pushes is 30 percent or less for a short battery or 35 percent or less for a tall battery. If the corrective action and/or increased coking time was successful, the permittee may return the oven to the 90-day reading rotation described in paragraph V.F.3.d.1) above. If the average opacity of either push exceeds 30 percent for a short battery or 35 percent for a tall battery, the corrective action and/or increased coking time was unsuccessful, and the permittee must complete additional corrective action and/or increase coking time for that oven within the number of days allowed in paragraph V.F.3.d.4) above.

B. After implementing any additional corrective action and/or increased coking time required under paragraph V.F.3.d.5)A or V.F.3.d.6)A below, the permittee must demonstrate that corrective action and/or increased coking time was successful. After a period of time no longer than the number of days allowed in paragraph V.F.3.d.4) above, the permittee must observe and record the opacity of the first two pushes for the oven capable of being observed using the procedures in §63.7334(a). The corrective action and/or increased coking time was successful if the average opacity for each of the two pushes is 30 percent or less for a short battery or 35 percent or less for a tall battery. If the corrective action and/or increased coking time was successful, the permittee may return the oven to the 90-day reading rotation described in paragraph V.F.3.d.1) above. If the average opacity of either push exceeds 30 percent for a short battery or 35 percent for a tall battery, the corrective action and/or increased coking time was unsuccessful, and the permittee must follow the procedures in paragraph V.F.3.d.5)C below.

C. If the corrective action and/or increased coking time was unsuccessful as described in condition V.F.3.d.5)B above, the permittee must repeat the procedures in condition V.F.3.d.5)B above until the corrective action and/or increased coking time is successful. The permittee must report to the Department as a deviation each unsuccessful attempt at corrective action and/or increased coking time under paragraph V.F.3.d.5)B above.

6) If at any time the permittee places an oven on increased coking time as a result of fugitive pushing emissions that exceed 30 percent for a short battery or 35 percent for a tall battery, the permittee must keep the oven on the increased coking time until the oven qualifies for decreased coking time using one of the following procedures:

A. To qualify for a decreased coking time for an oven placed on increased coking time in accordance with condition V.F.3.d.4) or V.F.3.d.5) above, the permitee must operate the oven on the decreased coking time. After no more than two coking cycles on the decreased coking time, the permittee must observe and record the opacity of the first two pushes that are capable of being observed using the procedures in §63.7334(a). If the average opacity for each of the two pushes is 30 percent or less for a short battery or 35 percent or less for a tall battery, the permittee may keep the oven on the decreased coking time and return the oven to the 90-day reading rotation described in condition V.F.3.d.1) above. If the average opacity of either push exceeds 30 percent for a short battery or 35 percent for a tall battery, the attempt to qualify for a decreased coking time was unsuccessful. The permittee must

proposed

then return the oven to the previously established increased coking time, or implement other corrective action(s) and/or increased coking time. If the permittee implements other corrective action and/or a coking time that is shorter than the previously established increased coking time, the permittee must follow the procedures in condition V.F.3.d.5)B above to confirm that the corrective action(s) and/or increased coking time was successful.

B. If the attempt to qualify for decreased coking time was unsuccessful as described in condition V.F.3.d.6)A above, the permittee may again attempt to qualify for decreased coking time for the oven. To do this, the permittee must operate the oven on the decreased coking time. After no more than two coking cycles on the decreased coking time, the permittee must observe and record the opacity of the first two pushes that are capable of being observed using the procedures in V.F.3.r below or §63.7334(a). If the average opacity for each of the two pushes is 30 percent or less for a short battery or 35 percent or less for a tall battery, the permittee may keep the oven on the decreased coking time and return the oven to the 90-day reading rotation described in condition V.F.3.d.1) above. If the average opacity of either push exceeds 30 percent for a short battery or 35 percent for a tall battery, the attempt to qualify for a decreased coking time was unsuccessful. The permittee must then return the oven to the previously established increased coking time, or implement other corrective action(s) and/or increased coking time. If the permittee implements other corrective action and/or a coking time that is shorter than the previously established increased coking time, the permittee must follow the procedures in paragraph V.F.3.d.5)B above to confirm that the corrective action(s) and/or increased coking time was successful.

C. The permittee must report to the Department as a deviation the second and any subsequent consecutive unsuccessful attempts on the same oven to qualify for decreased coking time as described in paragraph V.F.3.d.6)B above

e. As provided in §63.6(g), the permittee may request to use an alternative to the work practice standards in Condition V.F.3.c above. [§2103.12.i; §2103.12.h.6; §63.7291(b)]

f. The permittee shall prepare and operate at all times according to a written operation and maintenance plan for each capture system and control device applied to pushing emissions from coke battery(s). Each plan must address at a minimum the following elements. [§2103.12.i; §2103.12.h.6; §63.7300(c)]

1) Monthly inspections of the equipment that are important to the performance of the total capture system (e.g., pressure sensors, dampers, and damper switches). This inspection must include observations of the physical appearance of the equipment (e.g., presence of holes in ductwork or hoods, flow constrictions caused by dents or accumulated dust in ductwork, and fan erosion). In the event a defect or deficiency is found in the capture system (during a monthly inspection or between inspections), the permittee must complete repairs within 30 days after the date that the defect or deficiency is discovered. If the permittee determines that the repairs cannot be completed within 30 days, the permittee must submit a written request for an extension of time to complete the repairs that must be received by the Department not more than 20 days after the date that the defect or deficiency is discovered. The request must contain a description of the defect or deficiency, the steps needed and taken to correct the problem, the interim steps being taken to mitigate the emissions impact of the defect or deficiency, and a proposed schedule for completing the repairs. The request shall be deemed approved unless and until such time as the Department notifies the permittee that it objects to the request. The Department

proposed

may consider all relevant factors in deciding whether to approve or deny the request (including feasibility and safety). Each approved schedule must provide for completion of repairs as expeditiously as practicable, and the permitting authority may request modifications to the proposed schedule as part of the approval process.

2) Preventative maintenance for each control device, including a preventative maintenance schedule that is consistent with the manufacturer's instructions for routine and long-term maintenance.

3) Corrective action for all baghouses applied to pushing emissions. In the event a bag leak detection system alarm is triggered, the permittee must initiate corrective action to determine the cause of the alarm within 1 hour of the alarm, initiate corrective action to correct the cause of the problem within 24 hours of the alarm, and complete the corrective action as soon as practicable. Actions may include, but are not limited to:
   A. Inspecting the baghouse for air leaks, torn or broken bags or filter media, or any other condition that may cause an increase in emissions.
   B. Sealing off defective bags or filter media.
   C. Replacing defective bags or filter media or otherwise repairing the control device.
   D. Sealing off a defective baghouse compartment.
   E. Cleaning the bag leak detection system probe, or otherwise repairing the bag leak detection system.
   F. Shutting down the process producing the particulate emissions

g. For the PEC system baghouse applied to pushing emissions from a coke oven battery, the permittee shall at all times monitor the relative change in particulate matter loadings using a bag leak detection system according to the requirements in V.F.3.h below and conduct inspections at their specified frequency according to the following requirements: [§2103.12.i; §2103.12.h.6; §63.7330(a)]

1) Monitor the pressure drop across each baghouse cell each day to ensure pressure drop is within the normal operating range identified in the manual;
2) Confirm that dust is being removed from hoppers through weekly visual inspections or equivalent means of ensuring the proper functioning of removal mechanisms;
3) Check the compressed air supply for pulse-jet baghouses each day;
4) Monitor cleaning cycles to ensure proper operation using an appropriate methodology;
5) Check bag cleaning mechanisms for proper functioning through monthly visual inspection or equivalent means;
6) Make monthly visual checks of bag tension on reverse air and shaker-type baghouses to ensure that bags are not kinked (kneed or bent) or laying on their sides. The permittee does not have to make this check for shaker-type baghouses using self-tensioning (spring-loaded) devices;
7) Confirm the physical integrity of the baghouse through quarterly visual inspections of the baghouse interior for air leaks; and
8) Inspect fans for wear, material buildup, and corrosion through quarterly visual inspections, vibration detectors, or equivalent means.

h. The permittee shall install, operate, and maintain a bag leak detection system on the PEC system baghouse according to the following requirements: [§2103.12.i; §2103.12.h.6; §63.7331(a)]

1) The system must be certified by the manufacturer to be capable of detecting emissions of particulate matter at concentrations of 10 milligrams per actual cubic meter (0.0044 grains per

proposed

actual cubic foot) or less;

2) The system must provide output of relative changes in particulate matter loadings;
3) The system must be equipped with an alarm that will sound when an increase in relative particulate loadings is detected over a preset level. The alarm must be located such that it can be heard by the appropriate plant personnel;
4) Each system that works based on the triboelectric effect must be installed, operated, and maintained in a manner consistent with the guidance document, ``Fabric Filter Bag Leak Detection Guidance'' (EPA-454/R-98-015, September 1997). The permittee may install, operate, and maintain other types of bag leak detection systems in a manner consistent with the manufacturer's written specifications and recommendations;
5) To make the initial adjustment of the system, establish the baseline output by adjusting the sensitivity (range) and the averaging period of the device. Then, establish the alarm set points and the alarm delay time;
6) Following the initial adjustment, do not adjust the sensitivity or range, averaging period, alarm set points, or alarm delay time, except as detailed in the operation and maintenance plan. Do not increase the sensitivity by more than 100 percent or decrease the sensitivity by more than 50 percent over a 365-day period unless a responsible official certifies, in writing, that the baghouse has been inspected and found to be in good operating condition; and
7) Where multiple detectors are required, the system's instrumentation and alarm may be shared among detectors.

i. For each CPMS required in V.F.3.n below, the permittee must develop and make available for inspection upon request by the Department a site-specific monitoring plan that addresses the requirements in Conditions V.F.3.i.1) through V.F.3.i.6) below: [§2103.12.i; §2103.12.h.6; §63.7331(b)]

1) Installation of the CPMS sampling probe or other interface at a measurement location relative to each affected process unit such that the measurement is representative of control of the exhaust emissions (e.g., on or downstream of the last control device);
2) Performance and equipment specifications for the sample interface, the parametric signal analyzer, and the data collection and reduction system;
3) Performance evaluation procedures and acceptance criteria (e.g., calibrations);
4) Ongoing operation and maintenance procedures in accordance with the general requirements of §63.8(c)(1), (3), (4)(ii), (7), and (8);
5) Ongoing data quality assurance procedures in accordance with the general requirements of §63.8(d); and
6) Ongoing recordkeeping and reporting procedures in accordance the general requirements of §63.10(c), (e)(1), and (e)(2)(i).

j. The permittee shall conduct a performance evaluation of each CPMS in accordance with the site-specific monitoring plan. [§2103.12.i; §2103.12.h.6; §63.7331(c)]

k. The permittee shall operate and maintain each CPMS in continuous operation according to the site-specific monitoring plan. [§2103.12.i; §2103.12.h.6; §63.7331(d)]

l. If the permittee elects the operating limit in V.F.1.e.1) above for a capture system applied to pushing emissions, the permittee must install, operate, and maintain a device to measure the fan motor amperes. [§2103.12.i; §2103.12.h.6; §63.7331(h)]

m. If the permittee elects the operating limit in V.F.1.e.2) above for a capture system applied to pushing

proposed

emissions, the permittee must install, operate, and maintain a device to measure the total volumetric flow rate at the inlet of the control device. [§2103.12.i; §2103.12.h.6; §63.7331(g)]

n. For each capture system applied to pushing emissions, the permittee shall at all times monitor the fan motor amperes according to the requirements in Condition V.F.3.l above or the volumetric flow rate according to the requirements in Condition V.F.3.m above. [§2103.12.i;§2103.12.h.6; §63.7330(d)]

o. Except for monitor malfunctions, associated repairs, and required quality assurance or control activities (including as applicable, calibration checks and required zero and span adjustments), the permittee shall monitor continuously (or collect data at all required intervals) at all times the affected source is operating. [§2103.12.i; §2103.12.h.6; §63.7332(a)]

p. The permittee shall not use data recorded during monitoring malfunctions, associated repairs, and required quality assurance or control activities in data averages and calculations used to report emission or operating levels, or in fulfilling a minimum data availability requirement, if applicable. The permittee shall use all the data collected during all other periods in assessing compliance. A monitoring malfunction is any sudden, infrequent, not reasonably preventable failure of the monitor to provide valid data. Monitoring failures that are caused in part by poor maintenance or careless operation are not malfunctions. [§2103.12.i; §2103.12.h.6; §63.7332(b)]

q. For each capture system applied to pushing emissions and subject to the operating limit in Condition V.F.1.e above, the permittee shall demonstrate continuous compliance by meeting the requirements in ConditionV.F.3.q.1) or V.F.3.q.2) below: [§2103.12.i; §2103.12.h.6; §63.7333(d)]

1) If the permittee elects the operating limit for fan motor amperes in V.F.1.e.1) above:

   A. Maintaining the daily average fan motor amperes at or above the minimum level established during the initial or subsequent performance test; and
   B. Checking the fan motor amperes at least every 8 hours to verify the daily average is at or above the minimum level established during the initial or subsequent performance test and recording the results of each check.

2) If the permittee elects the operating limit for volumetric flow rate in V.F.1.e.2) above:

   A. Maintaining the daily average volumetric flow rate at the inlet of the control device at or above the minimum level established during the initial or subsequent performance test; and
   B. Checking the volumetric flow rate at least every 8 hours to verify the daily average is at or above the minimum level established during the initial or subsequent performance test and recording the results of each check.

r. The permittee shall demonstrate continuous compliance with the work practice standards for fugitive pushing emissions according to the following requirements: [§2103.12.i; §2103.12.h.6; §63.7334(a)]

1) Observe and record the opacity of fugitive emissions for four consecutive pushes per operating day, except the permittee may make fewer or non-consecutive observations as permitted by Condition V.F.3.d.2) above. Maintain records of the pushing schedule for each oven and records indicating the legitimate operational reason for any change in the pushing schedule according to Condition V.F.3.d.3) above.

proposed

2) Observe and record the opacity of fugitive emissions from each oven in a battery at least once every 90 days. If an oven cannot be observed during a 90-day period, observe and record the opacity of the first push of that oven following the close of the 90-day period that can be read in accordance with the procedures in paragraphs V.F.3.r.1) through V.F.3.r.8).
3) Make all observations and calculations for opacity observations of fugitive pushing emissions in accordance with Method 9 in Appendix A to 40 CFR Part 60 using a Method 9 certified observer unless the permittee has an approved alternative procedure under V.F.3.r.7) below
4) Record pushing opacity observations at 15-second intervals as required in section 2.4 of Method 9 (Appendix A to 40 CFR Part 60). The requirement in section 2.4 of Method 9 for a minimum of 24 observations does not apply, and the data reduction requirements in section 2.5 of Method 9 do not apply. The requirement in §63.6(h)(5)(ii) for obtaining at least 3 hours of observations (thirty 6-minute averages) to demonstrate initial compliance does not apply.
5) If fewer than six but at least four 15-second observations can be made, use the average of the total number of observations to calculate average opacity for the push. Missing one or more observations during the push (e.g., as the quench car passes behind a building) does not invalidate the observations before or after the interference for that push. However, a minimum of four 15-second readings must be made for a valid observation.
6) Begin observations for a push at the first detectable movement of the coke mass. End observations of a push when the quench car enters the quench tower.

   A. Observe fugitive pushing emissions from a position at least 10 meters from the quench car that provides an unobstructed view and avoids interferences from the topside of the battery. This may require the observer to be positioned at an angle to the quench car rather than perpendicular to it. Typical interferences to avoid include emissions from open standpipes and charging. Observe the opacity of emissions above the battery top with the sky as the background where possible. Record the oven number of any push not observed because of obstructions or interferences.

   B. The permittee may reposition after the push to observe emissions during travel if necessary.

7) If it is infeasible to implement the procedures in Conditions V.F.3.r.1) through V.F.3.r.6) above for an oven due to physical obstructions, nighttime pushes, or other reasons, the permittee may apply to the Department for permission to use an alternative procedure. The application must provide a detailed explanation of why it is infeasible to use the procedures in Conditions V.F.3.r.1) through V.F.3.r.6), identify the oven and battery numbers, and describe the alternative procedure. An alternative procedure must identify whether the coke in that oven is not completely coked, either before, during, or after an oven is pushed.
8) For each oven observed that exceeds an opacity of 30 percent for any short battery or 35 percent for any tall battery, the permittee must take corrective action and/or increase the coking time in accordance with Condition V.F.3.c above. Maintain records documenting conformance with Condition V.F.3.c above.

s. For each coke oven battery with a capture system or control device applied to pushing emissions, the permittee shall demonstrate continuous compliance with the operation and maintenance requirements in Condition V.F.3.f above by meeting the following requirements: [§2103.12.j; §2103.12.h.6; §63.7335(b)]

1) Making monthly inspections of capture systems according to Condition V.F.3.f.1) above and recording all information needed to document conformance with these requirements;
2) Performing preventative maintenance for each control device according to Condition V.F.3.f.2)

proposed

above and recording all information needed to document conformance with these requirements; and

3) Initiating and completing corrective action for a bag leak detection system alarm according to Condition V.F.3.f.3) above and recording all information needed to document conformance with these requirements. This includes records of the times the bag leak detection system alarm sounds, and for each valid alarm, the time corrective action was initiated, the corrective action(s) taken, and the date on which corrective action is completed.

t. To demonstrate continuous compliance with the operation and maintenance requirements for a baghouse applied to pushing emissions from a coke oven battery in V.F.3.h above, the permittee shall inspect and maintain each baghouse according to the requirements in Conditions V.F.3.h.1) through V.F.3.h.7) above and record all information needed to document conformance with these requirements. If the permittee increases or decreases the sensitivity of the bag leak detection system beyond the limits specified in Condition V.F.3.h.6) above, the permittee must include a copy of the required written certification by a responsible official in the next semiannual compliance report. [§2103.12.i; §2103.12.h.6; §63.7335(c)]

4. Record Keeping Requirements:

a. The results of the inspections required by condition V.F.3.b above shall be recorded weekly along with the differential pressure drop across the baghouse. [§2103.12.j]

b. Episodes of non-compliance with conditions V.F.1.a through V.F.1.g and V.F.3.b above and corrective actions taken shall be recorded upon occurrence. [§2103.12.j; Installation Permit 0052-I005a]

c. The permittee shall keep records of each baghouse maintenance inspection and repair, replacement or other corrective action. [§2103.12.j; Installation Permit 0052-I005a]

d. The permittee shall keep the following records: [§2103.12.j; §2103.12.h.6; §63.7342(a)]

1) A copy of each notification and report that was submitted to comply with this subpart, including all documentation supporting any initial notification or notification of compliance status that was submitted, according to the requirements in §63.10(b)(2)(xiv).
2) The records in §63.6(e)(3)(iii) through (v) related to startup, shutdown, and malfunction.
3) Records of performance tests, performance evaluations, and opacity observations as required in §63.10(b)(2)(viii).

e. For each COMS or CEMS, the permittee shall keep the following records. [§2103.12.j; §2103.12.h.6; §63.7342(b)]

1) Records described in §63.10(b)(2)(vi) through (xi).
2) Monitoring data for COMS during a performance evaluation as required in §63.6(h)(7)(i) and (ii).
3) Previous (that is, superceded) versions of the performance evaluation plan as required in §63.8(d)(3).
4) Records of the date and time that each deviation started and stopped and whether the deviation occurred during a period of startup, shutdown, or malfunction or during another period.

f. The permittee shall keep the records in §63.6(h)(6) for visual observations. [§2103.12.j;

proposed

§2103.12.h.6; §63.7342(c)]

g. The permittee shall keep the records required in Conditions V.F.3.q through V.F.3.s and V.F.4.k through V.F.4.l below to show continuous compliance with each emission limitation, work practice standard, and operation and maintenance requirement that applies. [§2103.12.j; §2103.12.h.6; §63.7342(d)]

h. The permittee shall keep records in a form suitable and readily available for expeditious review, according to §63.10(b)(1). [§2103.12.j; §2103.12.h.6; §63.7343(a)]

i. As specified in §63.10(b)(1), the permittee shall keep each record for 5 years following the date of each occurrence, measurement, maintenance, corrective action, report, or record. [§2103.12.j; §2103.12.h.6; §63.7343(b); §2103.12.j; Installation Permit 0052-I005a]

j. The permittee shall keep each record on site for at least 2 years after the date of each occurrence, measurement, maintenance, corrective action, report, or record, according to §63.10(b)(1). The permittee can keep the records offsite for the remaining 3 years. [§2103.12.j; §2103.12.h.6; §63.7343(c)]

k. The permittee shall inspect and maintain the pushing emission control baghouse as required in V.F.3.h.1) through V.F.3.h.7) above and record all information needed to document conformance with these requirements. If the permittee increases or decreases the sensitivity of the bag leak detection system beyond the limits specified in V.F.3.h.6) above, the permittee must include a copy of the required written certification by a responsible official in the next semiannual compliance report. [§2103.12.j; §63.7335(c)]

l. The permittee shall maintain a current copy of the operation and maintenance plans required in §63.7300(b) and (c) onsite and available for inspection upon request. The plans shall be kept for the life of the affected source or until the affected source is no longer subject to the requirements of 40 CFR Part 63, Subpart CCCCC. [§2103.12.j; §63.7335(d)]

5. Reporting Requirements:

a. The permittee shall report all instances of non-compliance with conditions V.F.1.a through V.F.1.g, V.F.3.a and V.F.3.b above, and V.F.4.a through V.F.4.c above along with all corrective action taken to restore the subject equipment to compliance, to the Department every six months. [§2103.12.k; Installation Permit 0052-I005a]

b. Reporting instances of non-compliance in accordance with condition V.F.5.a above, does not relieve the permittee of the requirement to report breakdowns in accordance with IV.9 above, if appropriate. [§2103.12.k; Installation Permit 0052-I005a]

c. No later than twenty (20) days after the end of each month, a written report of a summary of the following during each such month shall be submitted to the Department: [§2103.12.k; §2109.03; Enforcement Order 202.E, 3/28/90]

1) For each individual coke battery or group of batteries served by the same push emission control system, and for all coke batteries combined:

A. The total number of pushes for the month;

proposed

B. The total number of controlled pushes for the month; and the monthly percentage availability (on-line time) of the pushing control system, based on the total number of pushes and total number of controlled pushes.

2) For each outage of the pushing control system at each individual coke battery or group of batteries served by the same pushing emission control system:

A. The batteries affected;
B. The starting and ending dates and times;
C. The total time of each outage, to the nearest tenth of an hour;
D. The corresponding Department Breakdown Number; and the reason(s) or cause(s) for the outage.

d. The permittee shall report each instance in which each emission limitation in Conditions V.F.1.d, V.F.1.e and V.F.1.f was not met. This includes periods of startup, shutdown, and malfunction. The permittee shall also report each instance in which the permittee did not meet each work practice standard or operation and maintenance requirement in Conditions V.F.6.a, V.F.6.b and V.F.6.c. These instances are deviations from the emission limitations (including operating limits), work practice standards, and operation and maintenance requirements of 40 CFR Part 63, Subpart CCCCC. These deviations must be reported according to the requirements in V.F.5.h through V.F.5.k below. [§2103.12.k; §2103.12.h.6; §63.7336(a)]

e. During periods of startup, shutdown, and malfunction, the permittee must operate in accordance with the startup, shutdown, and malfunction plan. [§2103.12.k; §2103.12.h.6; §63.7336(b)]

1) Consistent with §63.6(e) and 63.7(e)(1), deviations that occur during a period of startup, shutdown, or malfunction are not violations if the permittee demonstrates to the Department's satisfaction that operation was in accordance with the startup, shutdown, and malfunction plan.
2) The Department will determine whether deviations that occur during a period of startup, shutdown, or malfunction are violations, according to the provisions in §63.6(e).

f. The permittee shall submit all of the notifications in §63.6(h)(4) and (5), 63.7(b) and (c), 63.8(e) and (f)(4), and 63.9(b) through (h) that apply by the specified dates. [§2103.12.k; §2103.12.h.6; §63.7340(a)]

g. The permittee shall submit a notification of intent to conduct a performance test at least 60 calendar days before the performance test is scheduled to begin as required in §63.7(b)(1). [§2103.12.k; §2103.12.h.6; §63.7340(d)]

h. The permittee must submit semiannual compliance reports for the PEC stacks to the Department according to General Condition III.15 above. All semiannual compliance reports must be postmarked or delivered no later than July 31 or January 31, whichever date is the first date following the end of the semiannual reporting period. [§2103.12.k; §2103.12.h.6; §63.7341(a)]

i. Each semiannual compliance report must provide information on compliance with the emission limitations, work practice standards, and operation and maintenance requirements for all affected sources except battery stacks. The reports must include the information in V.F.5.i.1) through V.F.5.i.3) below, and as applicable, Conditions V.F.5.i.4) through V.F.5.i.8) below. [§2103.12.k; §2103.12.h.6; §63.7341(c)]
1) Company name and address.

proposed

2) Statement by a responsible official, with the official's name, title, and signature, certifying the truth, accuracy, and completeness of the content of the report.
3) Date of report and beginning and ending dates of the reporting period.
4) If there was a startup, shutdown, or malfunction during the reporting period and the permittee took actions consistent with the startup, shutdown, and malfunction plan, the compliance report must include the information in §63.10(d)(5)(i).
5) If there were no deviations from the continuous compliance requirements in Conditions V.F.3.q through V.F.3.s above, a statement that there were no deviations from the emission limitations, work practice standards, or operation and maintenance requirements during the reporting period.
6) If there were no periods during which a continuous monitoring system (including COMS, continuous emission monitoring system (CEMS), or CPMS) was out-of-control as specified in §63.8(c)(7), a statement that there were no periods during which a continuous monitoring system was out-of-control during the reporting period.
7) For each deviation from an emission limitation in 40 CFR 63, Subpart CCCCC and for each deviation from the requirements for work practice standards in this 40 CFR Part 63, Subpart CCCCC that occurs at an affected source where the permittee is not using a continuous monitoring system (including a COMS, CEMS, or CPMS) to comply with the emission limitations in this subpart, the compliance report must contain the information in Conditions V.F.5.i.4), V.F.5.i.7)A and V.F.5.i.7)B below. This includes periods of startup, shutdown, and malfunction.

   A. The total operating time of each affected source during the reporting period.
   B. Information on the number, duration, and cause of deviations (including unknown cause, if applicable) as applicable and the corrective action taken.

8) For each deviation from an emission limitation occurring at an affected source where the permittee is using a continuous monitoring system (including COMS, CEMS, or CPMS) to comply with the emission limitation 40 CFR 63, Subpart CCCCC, the permittee must include the information in Conditions V.F.5.i.4), V.F.5.i.8)A through V.F.5.i.8)L below. This includes periods of startup, shutdown, and malfunction.

   A. The date and time that each malfunction started and stopped.
   B. The date and time that each continuous monitoring system (including COMS, CEMS, or CPMS) was inoperative, except for zero (low-level) and high-level checks.
   C. The date, time, and duration that each continuous monitoring system (including COMS, CEMS, or CPMS) was out-of-control, including the information in §63.8(c)(8).
   D. The date and time that each deviation started and stopped, and whether each deviation occurred during a period of startup, shutdown, or malfunction or during another period.
   E. A summary of the total duration of the deviation during the reporting period and the total duration as a percent of the total source operating time during that reporting period.
   F. A breakdown of the total duration of the deviations during the reporting period into those that are due to startup, shutdown, control equipment problems, process problems, other known causes, and other unknown causes.
   G. A summary of the total duration of continuous monitoring system downtime during the reporting period and the total duration of continuous monitoring system downtime as a percent of the total source operating time during the reporting period.
   H. An identification of each HAP that was monitored at the affected source.
   I. A brief description of the process units.
   J. A brief description of the continuous monitoring system.

proposed

K. The date of the latest continuous monitoring system certification or audit.
L. A description of any changes in continuous monitoring systems, processes, or controls since the last reporting period.

j. If the permittee had a startup, shutdown, or malfunction during the semiannual reporting period that was not consistent with the startup, shutdown, and malfunction plan, the permittee must submit an immediate startup, shutdown, and malfunction report according to the requirements in §63.10(d)(5)(ii). [§2103.12.k; §2103.12.h.6; §63.7341(d)]

k. If the permittee submits a compliance report for an affected source along with, or as part of, the semiannual monitoring report required by 40 CFR 70.6(a)(3)(iii)(A), and the compliance report includes all the required information concerning deviations from any emission limitation or work practice standard in 40 CFR Part 63, Subpart CCCCC, submission of the compliance report satisfies any obligation to report the same deviations in the semiannual monitoring report. However, submission of a compliance report does not otherwise affect any obligation the permittee may have to report deviations from permit requirements to the Department. [§2103.12.k; §2103.12.h.6; §63.7341(e)]

6. Work Practice Standard:

a. The permittee shall develop and implement a written startup, shutdown, and malfunction plan according to the provisions in 40 CFR 63, Subpart A, §63.6(e)(3). [§2103.12.h.6; §63.7310(c)].

b. As required by §63.6(e)(1)(i), the permittee shall operate and maintain each coke battery including air pollution control and monitoring equipment, in a manner consistent with good air pollution control practices for minimizing emissions at least to the levels required by 40 CFR Part 63, Subpart CCCCC. [§2103.12.h.6; §63.7300(a)]

c. The permittee shall be in compliance with the emission limitations, work practice standards, and operation and maintenance requirements of 40 CFR 63, Subpart CCCCC at all times, except during periods of startup, shutdown, and malfunction as defined in §63.2. [§2103.12.h.6; §63.7310(a)]

d. At no time shall the permittee operate the No. 19 and 20 PEC system unless it is properly operated and maintained according to good engineering and air pollution control practices by performing regular maintenance with the exception of actions to mitigate emergency conditions. [RACT IP 0052-I020b, V.D.1.b; RACT Order No. 234, Condition 1.1; 25 Pa Code §129.99; §2103.12.a.2.B]

7. Additional Requirements:

The definitions in 40 CFR 63.7352 are hereby incorporated into this permit by reference.

PERMIT SHIELD IN EFFECT

proposed

G. Coke Oven Battery B: P012

Process Description: Coke Oven Battery B
Facility ID: P012
Max. Design Rate: 1,491,025 tons of coal per year
Capacity: 1,491,025 tons of coal per year
Raw Materials: Coal, supplemented with recycled coke plant materials such as tar decanter sludge, bio sludge, and coke oven gas pipeline material; synfuel; metallurgical coke; petroleum coke; coke breeze; Synfuel additives; recycle tire chips; and bulk density control additives such as diesel fuel.
Control Device: Pushing emission control baghouse (see Emission Unit P054)

1. Restrictions:

a. The permittee shall install, operate and maintain a bypass/bleeder stack flare system in Coke Oven Battery B that is capable of controlling 120 percent of the normal gas flow generated by Battery B. [§2103.12.h.6; §63.307(a)(1)]

b. Coke oven emissions shall not be vented to the atmosphere through bypass/bleeder stacks, except through the flare system or the alternative control device as described in V.G.1.c below. [§2103.12.h.6; §63.307(a)(2)]

c. As an alternative to the installation, operation, and maintenance of a flare system as required in Conditions V.G.1.a above and V.G.1.b above, the owner or operator may petition the Administrator and the Department for approval of an alternative control device or system that achieves at least 98 percent destruction or control of coke oven emissions vented to the alternative control device or system. [§2103.12.h.6; 63.307(d)]

d. The emergency bypass/bleeder stack flare system for each battery shall be designed for a net heating value of 240 Btu per standard cubic feet (Btu/scf). [§2103.12.h.6; §63.307(b)(1)]

e. Each flare shall have a continuously operable pilot flame that is present at all times as determined by a thermocouple or any other equivalent device. [§2103.12.h.6; §63.307(b)(2); §63.307(b)(4); §63.309)(h)(2)]

f. At all times including periods of startup, shutdown, and malfunction, the permittee shall operate and maintain the coke oven batteries and its pollution control equipment required under 40 CFR 63, Subpart L, in a manner consistent with good air pollution control practices for minimizing emissions to the levels required by any applicable performance standards under Subpart L. Failure to adhere to these requirements shall not constitute a separate violation if a violation of an applicable performance or work practice standard has also occurred. [§2103.12.h.6; §63.310(a)]

g. Each flare installed to meet the requirements of Conditions V.G.1.a through V.G.1.e above shall be operated with no visible emissions, as determined by Method 22 in Appendix A of 40 CFR Part 60, except for periods not to exceed a total of 5 minutes during any 2 consecutive hours with an observation period of 2 hours. [§2103.12.h.6; §63.307(c); §63.309(h)(1)]

h. The permittee shall not operate, or allow to be operated, any source in such manner that unburned coke oven gas is emitted into the open air. In addition, the permittee shall not flare, mix, or combust coke oven gas, or allow such gas to be flared, mixed or combusted unless the gas meets the

proposed

requirements of Site Level Condition IV.33. [§2105.21.h; §2105.21.h.4]

i. The permittee shall not cause to be discharged or allow to be discharged to the atmosphere coke oven emissions that exceed any of the following emission limitations: [§2103.12.h.6; §63.304(b)(2)(ii)-(iv); §63.304(b)(3)(ii)]
   1) 4.0 percent leaking coke oven doors as determined by the procedures in Condition IV.30.c.1) above;
   2) 0.4 percent leaking topside port lids, as determined by the procedures in Condition IV.30.c.1) above;
   3) 2.5 percent leaking offtake system(s), as determined by the procedures in Condition IV.30.c.1) above; and
   4) 12 seconds of visible emissions per charge, as determined by the procedures in Condition IV.30.c.2) above

j. The permittee shall operate according to the work practice plan, required in Condition IV.29 above following the second independent exceedance of the visible emission limitation for the emission point in any consecutive 6-month period, by no later than 3 days after receipt of written notification of the second such exceedance from the certified observer. [§2103.12.h.6; §63.306(c)(1)(i)]

k. The permittee shall not operate, or allow to be operated any Battery B coke ovens in such manner that the aggregate of visible charging emissions exceeds a total of 55 seconds during any five (5) consecutive charges on such battery. [§2105.21.a.1]

l. The permittee shall not operate, or allow to be operated Battery B coke ovens in such manner that emissions from the door areas of any coke oven exceed an opacity of 40% at any time 15 or more minutes after such oven has been charged. [§2105.21.b.4]

m. The permittee shall not operate, or allow to be operated Battery B coke ovens in such manner that, at any time, there are visible emissions from more than five percent (5%) of the door areas of the operating coke ovens in such battery, excluding the two door areas of the last oven charged and any door areas obstructed from view. Compliance with the percent door leakage standard is to be determined in accordance with the inspection techniques described in Chapter 18, Section C of the Department's Source Testing Manual and Appendix 1, Paragraph B. [§2105.21.b.1; 2nd Consent Decree, Appendix 1, V.B.3.a and 5]

n. The permittee shall not operate, or allow to be operated Battery B coke ovens in such manner that, at any time, there are visible emissions from more than one percent (1%) of the charging ports or charging port seals on the operating coke ovens of such battery. [§2105.21.c.1]

o. The permittee shall not operate, or allow to be operated Battery B coke ovens in such manner that, at any time, there are visible emissions from more than four percent (4%) of the offtake piping on the operating coke ovens of such battery. [§2105.21.d.1]

p. The permittee shall not operate, or allow to be operated Battery B coke ovens in such manner that visible emissions from the transport of hot coke in the open atmosphere exceed ten percent (10%) opacity at any time. [§2105.21.e.5]

q. The permittee shall not operate, or allow to be operated, Battery B coke ovens in such manner that, at any time, emissions from the combustion stack serving such battery exceed a particulate concentration of 0.015 grains per dry standard cubic foot. [§2105.21.f.1]

proposed

r. The permittee shall install, operate, maintain and calibrate a continuous opacity monitoring system on the combustion stack serving Coke Oven Battery B. [Enforcement Order No. 161, July 23, 1990]

s. The permittee shall not operate, or allow to be operated, B Battery coke ovens in such manner that, at any time, emissions from the combustion stack serving B Battery equal or exceed an opacity of 20% for a period or periods aggregating in excess of three (3) minutes in any 60 minute period; or equal or exceed an opacity of 60% at any time. [§2105.21.f.3-4]

t. The permittee shall not discharge to the atmosphere any emissions from any battery stack that exhibit an opacity greater than the following applicable limits: [§2103.12.h.6; §63.7296(a)-(b)]

1) Daily average of 15 percent opacity for a battery on a normal coking cycle.
2) Daily average of 20 percent opacity for a battery on battery-wide extended coking.

u. The permittee shall submit a notification of compliance status containing the results of the COMS performance test for battery stacks before the close of business on the 30th calendar day following the completion of the compliance demonstration. For each particulate matter emission limitation that applies, the permittee shall submit a notification of compliance status containing the results of the performance test before the close of business on the 60th calendar day following the completion of the performance test according to §63.10(d)(2). [§2103.12.h.6; §63.7326(d)]

v. Emissions from Coke Battery B combustion stack shall not exceed the emission limitations in Table V-G-1. [§2105.21.f.2; §2105.21.h.4; §2103.12.a.2.B]

Table V-G-1 - Emission Limitations for Battery B Combustion Stack

POLLUTANT	HOURLY EMISSION LIMIT (lb/hr)	ANNUAL EMISSION LIMIT (tons/year)[1]
PM	12.40	54.33
PM_{10}	12.40	54.33
$PM_{2.5}$	12.40	54.33
NO_X	175.56	768.94
CO	219.21	961.47
VOC	3.77	16.51

[1]A year is defined as any consecutive 12-month period.

*NO_X, CO and VOC emissions include combustion stack, soaking, charging, door leaks, lid leaks, offtake leaks, decarbonization.

w. SO_2 emissions from Battery B combustion stack shall not exceed the limitations in Table V-G-2 below: [§2102.04.b.6; §2105.21.h]

Proposed

TABLE V-G-2 – SO_2 Emission Limitations for Battery B Combustion Stack

Process	Thirty-day (30-day) Emission Limit* (lb/hr)	Supplementary 24-hr Emission Limit** (lb/hr)[1]	Annual Emission Limit (tons/year)[1]
Battery B Underfiring	21.38	27.26	93.64

[1]A year is defined as any consecutive 12-month period.

*Limits are based on a rolling 30-day average of 24-hour (calendar day) averages, with an additional restriction of no more than 3 consecutive days above a supplementary 24-hour limit. These limits are based on ACHD's SO_2 State Implementation Plan (SIP) Permit Revision and USEPA SO_2 Guidance dated September 14, 2017.

**Tons/year value is used to demonstrate the expected tons/year from this unit. The value is derived by converting the 30-day rolling average limit lb/hr to an annual tons per year value. These limits are based on ACHD's SO_2 State Implementation Plan (SIP) Permit Revision and USEPA SO_2 Guidance dated September 14, 2017.

2. Testing Requirements:

a. The permittee shall have PM, $PM_{2.5}$, and PM_{10} emissions stack tests performed on the combustion stack of Coke Battery B at least once every two 2) years to demonstrate compliance with the mass emission standard in Condition V.G.1.q above. Particulate emission tests shall be conducted according to the methodology specified in 40 CFR 60, Appendix A, Methods 1 through 5, 201A and 202 (or other method specified). The permittee shall submit a stack test protocol to the Department at least 45 days prior to the test dates. During each stack test performed, simultaneous visible emission evaluations shall be conducted according to the methodology specified in 40 CFR 60, Appendix A, Method 9, except for the provisions of Section 2.5 of Method 9. [§2103.12.h.1; §2108.02.e; Second Consent Decree, 6/24/1993]

b. The permittee shall have sulfur dioxide (SO_2) emissions stack tests performed on the combustion stacks of Coke Battery B at least once every two years to demonstrate compliance with the mass emission limitations for each combustion stack in Condition V.G.1.w above. SO_2 emission tests shall be conducted according to Method 6, 6A, 6B, or 6C specified in 40 CFR 60, Appendix A. The permittee shall submit a stack test protocol to the Department at least 45 days prior to the test dates. [§2108.02.b; §2108.02.e; SO_2 SIP IP 0052-I017, Condition V.A.2.a]

c. Emissions of SO_2 shall be determined by converting the H_2S grain loading of the fuel burned and the fuel flow rate to pounds per hour to determine compliance with the emission limitations of condition V.G.1.w above. [§2103.12.h.1; SO_2 SIP IP 0052-I017, Condition V.A.2.a]

d. The permittee shall perform emissions testing for NO_X , CO and VOC on each combustion stack of Coke Battery B at least once every two years to demonstrate compliance with the mass emission limitation for the combustion stack in Condition V.G.1.v above. Testing for NOx, CO and VOC shall be conducted at least once every two years in accordance with approved EPA Methods (Method 7, 7A, 7B, 7C, 7D or 7E, Method 10, 10A or 10B & Method 18) in Appendix A of 40 CFR Part 60, Article XXI §2108.02, and as approved by the Department. The permittee shall submit a stack test protocol to the Department for approval at least 45 days prior to the test dates. [§2103.12.h.1; §2108.02.b, §2108.02.e.]

e. The permittee shall have a Relative Accuracy Test Audit (RATA) performed for the nitrogen oxide (NO_X) CEMS as specified in 40 CFR Part 60, Appendix B, Specification 2. The RATA shall be performed annually to evaluate the acceptability of the NO_X CEMS data. The permittee shall submit the RATA protocol to the Department at least 45 days prior to the test dates. [40 CFR Part 60, Appendix B, Specification 2; §2108.03]

proposed

f. The permittee shall comply with the provisions of the applicable performance tests and procedure requirements in Site level Condition IV.30 above. [§63.309; §2103.12.h.1]

g. The Department reserves the right to require additional emissions testing sufficient to assure compliance with the terms and conditions of this permit. Such testing shall be performed in accordance with Site Level Condition IV.14 above and Article XXI §2108.02. [§2103.12.h.1]

3. Monitoring Requirements:

a. The permittee shall:

1) Inspect the collecting main for leaks at least once daily according to the procedures in Method 303 in 40 CFR Part 63, Appendix A [§2103.12.i; §2103.12.h.6; §63.308(a)];
2) Record the time and date a leak in the collecting main is first observed, the time and date the leak is temporarily sealed, and the time and date of repair [§2103.12.i; §2103.12.h.6; §63.308(b)];
3) Temporarily seal any leak in the collecting main as soon as possible after detection, but no later than 4 hours after detection of the leak [§2103.12.i; §2103.12.h.6; §63.308(c)]; and
4) Initiate a collecting main repair as expeditiously as possible, but no later than 5 calendar days after initial detection of the leak. The repair shall be completed within 15 calendar days after initial detection of the leak unless an alternative schedule is approved by the Department [§2103.12.i; §2103.12.h.6; §63.308(d)].

b. The permittee shall prepare and operate at all times according to a written operation and maintenance plan for the general operation and maintenance of all coke oven batteries. Each plan must address, at a minimum, the following elements: [§2103.12.i; §2103.12.h.6; §63.7300(b)]

1) Frequency and method of recording underfiring gas parameters.
2) Frequency and method of recording battery operating temperature, including measurement of individual flue and cross-wall temperatures.
3) Procedures to prevent pushing an oven before it is fully coked.
4) Procedures to prevent overcharging and undercharging of ovens, including measurement of coal moisture, coal bulk density, and procedures for determining volume of coal charged.
5) Frequency and procedures for inspecting flues, burners, and nozzles.
6) Schedule and procedures for the daily washing of baffles

c. The permittee shall monitor at all times the opacity of emissions exiting each coke oven battery stack using a COMS according to the requirements in V.G.3.f or §63.7331(j). [§2103.12.i; §2103.12.h.6; §63.7330(e)]

d. The permittee shall conduct a performance evaluation of each CPMS in accordance with the site-specific monitoring plan. [§2103.12.i; §2103.12.h.6; §63.7331(c)]

e. The permittee shall operate and maintain each CPMS in continuous operation according to the site-specific monitoring plan. [§2103.12.i; §2103.12.h.6; §63.7331(d)]

f. For each coke oven battery, the permittee shall install, operate, and maintain a COMS to measure and record the opacity of emissions exiting each stack according to the requirements in Conditions V.G.3.f.1) through V.G.3.f.5) below: [§2103.12.i; §2103.12.h.6; §63.7331(j)]

1) Install, operate, and maintain each COMS according to the requirements in §63.8(e) and

proposed

Performance Specification 1 in 40 CFR Part 60, Appendix B. Identify periods when the COMS is out-of-control, including any periods that the COMS fails to pass a daily calibration drift assessment, quarterly performance audit, or annual zero alignment audit.

2) Conduct a performance evaluation of each COMS according to the requirements in §63.8 and Performance Specification 1 in Appendix B to 40 CFR Part 60;
3) Develop and implement a quality control program for operating and maintaining each COMS according to the requirements in §63.8(d). At minimum, the quality control program must include a daily calibration drift assessment, quarterly performance audit, and an annual zero alignment audit of each COMS;
4) Each COMS must complete a minimum of one cycle of sampling and analyzing for each successive 10-second period and one cycle of data recording for each successive 6-minute period. The permittee must reduce the COMS data as specified in §63.8(g)(2).
5) Determine and record the hourly and daily (24-hour) average opacity according to the procedures in §63.7324(b) above using all the 6-minute averages collected for periods during which the COMS is not out-of-control.

g. Except for monitor malfunctions, associated repairs, and required quality assurance or control activities (including as applicable, calibration checks and required zero and span adjustments), the permittee shall monitor continuously (or collect data at all required intervals) at all times the affected source is operating. [§2103.12.i; §2103.12.h.6; §63.7332(a)]

h. The permittee shall not use data recorded during monitoring malfunctions, associated repairs, and required quality assurance or control activities in data averages and calculations used to report emission or operating levels, or in fulfilling a minimum data availability requirement, if applicable. The permittee shall use all the data collected during all other periods in assessing compliance. A monitoring malfunction is any sudden, infrequent, not reasonably preventable failure of the monitor to provide valid data. Monitoring failures that are caused in part by poor maintenance or careless operation are not malfunctions. [§2103.12.i; §2103.12.h.6; §63.7332(b)]

i. The permittee shall demonstrate continuous compliance for each by-product coke oven battery subject to the opacity limit for stacks in Condition V.G.1.t.1) and V.G.1.t.2) by meeting the requirements in Conditions V.G.3.i.1) and V.G.3.i.2) below: [§2103.12.i; §2103.12.h.6; §63.7333(e)]

1) Maintaining the daily average opacity at or below 15 percent for a battery on a normal coking cycle or 20 percent for a battery on battery-wide extended coking; and
2) Operating and maintaining a COMS and collecting and reducing the COMS data according to Condition V.G.3.f

4. Record Keeping Requirements:

a. The permittee shall maintain files of all required information in a permanent form suitable for inspection at an onsite location for at least 1 year and must thereafter be accessible within 3 working days to the Department for a period of five years. Copies of the work practice plan developed under Condition IV.29 above and the startup, shutdown, and malfunction plan developed under below through V.G.6.e below shall be kept onsite at all times. The permittee shall maintain the following information: [§2103.12.j; §2103.12.h.6; §63.311(f)]

1) A copy of the work practice plan required by Condition IV.29 above and any revision to the plan;

proposed

2) If the permittee is required under Condition IV.29.c above to implement the provisions of a work practice plan for a particular emission point, the following records regarding the implementation of plan requirements for that emission point during the implementation period;

   A. Copies of all written and audiovisual materials used in the training, the dates of each class, the names of the participants in each class, and documentation that all appropriate personnel have successfully completed the training required under Condition IV.29.b.1) above;
   B. The records required to be maintained by the plan provisions implementing Condition IV.29.b.7) above;
   C. Records resulting from audits of the effectiveness of the work practice program for the particular emission point, as required in Conditions IV.29.b.3)A, IV.29.b.4)A, IV.29.b.5)A or IV.29.b.6)A above; and
   D. If the plan provisions for coke oven doors must be implemented, records of the inventory of doors and jambs as required under Condition IV.29.b.3)F above; and

3) The design drawings and engineering specifications for the bypass/bleeder stack flare system or approved alternative control device or system as required under Conditions V.G.1.a through V.G.1.e above.
4) Records specified in Condition V.G.6.g below regarding the basis of each malfunction notification.

b. The permittee shall keep the following records: [§2103.12.j; §2103.12.h.6; §63.7342(a)]

1) A copy of each notification and report that was submitted to comply with this subpart, including all documentation supporting any initial notification or notification of compliance status that was submitted, according to the requirements in §63.10(b)(2)(xiv).
2) The records in §63.6(e)(3)(iii) through (v) related to startup, shutdown, and malfunction.
3) Records of performance tests, performance evaluations, and opacity observations as required in §63.10(b)(2)(viii).

c. For each COMS or CEMS, the permittee shall keep the following records. [§2103.12.j; §2103.12.h.6; §63.7342(b)]

1) Records described in §63.10(b)(2)(vi) through (xi).
2) Monitoring data for COMS during a performance evaluation as required in §63.6(h)(7)(i) and (ii).
3) Previous (that is, superceded) versions of the performance evaluation plan as required in §63.8(d)(3).
4) Records of the date and time that each deviation started and stopped, and whether the deviation occurred during a period of startup, shutdown, or malfunction or during another period.

d. The permittee shall keep the records in §63.6(h)(6) for visual observations. [§2103.12.j; §2103.12.h.6; §63.7342(c)]

e. The permittee shall keep the records required in Conditions V.G.3.i above and V.G.4.k below to show continuous compliance with each emission limitation, work practice standard, and operation and maintenance requirement that applies. [§2103.12.j; §2103.12.h.6; §63.7342(d)]

f. The permittee shall keep records in a form suitable and readily available for expeditious review, according to §63.10(b)(1). [§2103.12.j; §2103.12.h.6; §63.7343(a)]

g. As specified in §63.10(b)(1), the permittee shall keep each record for 5 years following the date of

proposed

each occurrence, measurement, maintenance, corrective action, report, or record. [§2103.12.j; §2103.12.h.6; §63.7343(b)]

h. The permittee shall keep each record on site for at least 2 years after the date of each occurrence, measurement, maintenance, corrective action, report, or record, according to §63.10(b)(1). The permittee can keep the records offsite for the remaining 3 years. [§2103.12.j; §2103.12.h.6; §63.7343(c)]

i. For each by-product coke oven battery, the permittee must demonstrate continuous compliance with the operation and maintenance requirements in V.G.3.b above by adhering at all times to the plan requirements and recording all information needed to document conformance. [§2103.12.j; §63.7335(a)]

j. The permittee shall maintain a current copy of the operation and maintenance plans required in V.G.3.b onsite and available for inspection upon request. The plans shall be kept for the life of the affected source or until the affected source is no longer subject to the requirements of 40 CFR Part 63, Subpart CCCCC. [§2103.12.j; §63.7335(d)]

k. The permittee must demonstrate continuous compliance to the work practice standard for soaking in V.G.6.k below, by maintaining records that document conformance with requirements in conditions V.G.6.k.1) throughV.G.6.k.5) below. [§2103.12.j; §2103.12.h.6; §63.7334(d)]

5. Reporting Requirements:

a. No later than twenty (20) days after the end of each month, a written report of a summary of the following during each such month shall be submitted to the Department: [§2103.12.k; §2109.03; Enforcement Order 202.E, 3/28/90]

1) For all coke batteries combined, the daily average for the month of:
   A. Coal charged, in tons;
   B. Coke produced, in tons;
   C. Total coke oven gas produced; in MMCF;
   D. Quench water used, in gallons;
   E. Elemental sulfur produced, in tons;
   F. Sulfur content of coal, in percent; and
   G. Sulfur content of coke, in percent.

2) For all periods during which contaminated quench water was used:
   A. The batteries affected;
   B. The starting and ending dates and times;
   C. The total time of each period, and total for the month, to the nearest tenth of an hour;
   D. The corresponding Department Breakdown Number;
   E. The average flow rates of contaminated water to both the quench towers and the water treatment plant during the period, each in gallons per minute; and
   F. The reason(s) or cause(s) for each period.

b. No later than twenty (20) days after the end of each month, a written report of a summary of the following for Coke Battery B combustion stack continuous opacity monitoring system, during each such month shall be submitted to the Department: [§2103.12.k; Enforcement Order No. 161, July 23, 1990]

1) The monthly percentage availability (on-line time), based on total minutes of coke operations

proposed

and total minutes available;
2) The daily percentage available;
3) The number of days on which there was less than 100% availability;
4) For each of the coke oven combustion stack visible emission standards set forth in §2105.21.f.3 & f.4, the total number of hours for the month, and the number of hours each day, during which an exceedance of such standard was measured by such continuous opacity monitor;
5) The number and nature of tests, calibrations, and any other quality assurance activities performed; and
6) The dates, times and results of all such activities.

c. The permittee shall include the following information in the semiannual compliance certification: [§2103.12.k; §2103.12.h.6; §63.311(d)]
1) Certification, signed by the permittee, that no coke oven gas was vented, except through the bypass/bleeder stack flare system during the reporting period or that a venting report has been submitted according to the requirements in Condition V.G.5.d below.
2) Certification, signed by the permittee, that a startup, shutdown, or malfunction event did not occur for a coke oven battery during the reporting period or that a startup, shutdown, and malfunction event did occur and a report was submitted according to the requirements in Condition V.G.5.d below; and
3) Certification, signed by the permittee, that work practices were implemented if applicable under Condition IV.29 above.

d. The permittee shall report any venting of coke oven gas through a bypass/bleeder stack that was not vented through the bypass/bleeder stack flare system to the Department as soon as practicable but no later than 24 hours after the beginning of the event. A written report shall be submitted within 30 days of the event and shall include a description of the event and, if applicable, a copy of the notification for a hazardous substance release required pursuant to 40 CFR §302.6. [§2103.12.k; §2103.12.h.6; §63.311(e)]

e. In order for the provisions of §63.310(i) to apply with respect to the observation (or set of observations) for a particular day, notification of a startup, shutdown, or a malfunction shall be made by the permittee as follows: [§2103.12.k; §2103.12.h.6; §63.310(d)]
1) If practicable, to the certified observer if the observer is at the facility during the occurrence; or
2) To the Department, in writing, within 24 hours of the occurrence first being documented by a company employee, and if the notification was not made, an explanation of why no such notification was made.

f. Within 14 days of the notification made in accordance with condition §63.310(d), or after a startup or shutdown, the permittee shall submit a written report to the Department that: [§2103.12.k; §2103.12.h.6; §63.310(e)]

1) Describes the time and circumstances of the startup, shutdown, or malfunction; and
2) Describes actions taken that might be considered inconsistent with the startup, shutdown, or malfunction plan.

g. The permittee shall submit to the Department a Semi-Annual Deviation Report for all deviations from Article XXI §2105.21(e)(4) and (e)(5) for Battery B. [§2103.12.k]

h. The permittee shall report each instance in which each emission limitation in Conditions V.G.1.t

proposed

and V.G.1.u was not met. This includes periods of startup, shutdown, and malfunction. The permittee shall also report each instance in which the permittee did not meet each work practice standard or operation and maintenance requirement in Conditions V.G.6.k, V.G.6.l and V.G.6.m. These instances are deviations from the emission limitations (including operating limits), work practice standards, and operation and maintenance requirements of 40 CFR Part 63, Subpart CCCCC. These deviations must be reported according to the requirements in V.G.5.l through V.G.5.p below. [§2103.12.k; §2103.12.h.6; §63.7336(a)]

i. During periods of startup, shutdown, and malfunction, the permittee must operate in accordance with the startup, shutdown, and malfunction plan. [§2103.12.k; §2103.12.h.6; §63.7336(b)]

1) Consistent with §63.6(e) and 63.7(e)(1), deviations that occur during a period of startup, shutdown, or malfunction are not violations if the permittee demonstrates to the Department's satisfaction that the permittee was operating in accordance with the startup, shutdown, and malfunction plan.
2) The Department will determine whether deviations that occur during a period of startup, shutdown, or malfunction are violations, according to the provisions in §63.6(e).

j. The permittee shall submit all of the notifications in §63.6(h)(4) and (5), 63.7(b) and (c), 63.8(e) and (f)(4), and 63.9(b) through (h) that apply by the specified dates. [§2103.12.k; §2103.12.h.6; §63.7340(a)]

k. The permittee shall submit a notification of intent to conduct a performance test at least 60 calendar days before the performance test is scheduled to begin as required in §63.7(b)(1). [§2103.12.k; §2103.12.h.6; §63.7340(d)]

l. The permittee must submit quarterly compliance reports for battery stacks to the Department in accordance with General Condition III.15 above. All quarterly compliance reports for battery stacks must be postmarked or delivered no later than one calendar month following the end of the quarterly reporting period. [§2103.12.k; §2103.12.h.6; §63.7341(a)]

m. Each quarterly report must provide information on compliance with the emission limitations for battery stacks in V.G.1.t above. The reports must include the information in Conditions V.G.5.n.1) through V.G.5.n.3) below, and as applicable, Conditions V.G.5.n.4) through V.G.5.n.8) below. [§2103.12.k; §2103.12.h.6; §63.7341(b)]

n. Each semiannual compliance report must provide information on compliance with the emission limitations, work practice standards, and operation and maintenance requirements for all affected sources except battery stacks. The reports must include the information in V.G.5.n.1) through V.G.5.n.3) below, and as applicable, ConditionsV.G.5.n.4) throughV.G.5.n.8) below. [§2103.12.k; §2103.12.h.6; §63.7341(c)]

1) Company name and address.
2) Statement by a responsible official, with the official's name, title, and signature, certifying the truth, accuracy, and completeness of the content of the report.
3) Date of report and beginning and ending dates of the reporting period.
4) If there was a startup, shutdown, or malfunction during the reporting period and the permittee took actions consistent with the startup, shutdown, and malfunction plan, the compliance report must include the information in §63.10(d)(5)(i).
5) If there were no deviations from the continuous compliance requirements in V.G.3.i above for

proposed

battery stacks, a statement that there were no deviations from the emission limitations during the reporting period.

6) If there were no periods during which a continuous monitoring system (including COMS, continuous emission monitoring system (CEMS), or CPMS) was out-of-control as specified in §63.8(c)(7), a statement that there were no periods during which a continuous monitoring system was out-of-control during the reporting period.

7) For each deviation from an emission limitation in 40 CFR 63, Subpart CCCCC and for each deviation from the requirements for work practice standards in this 40 CFR Part 63, Subpart CCCCC that occurs at an affected source where the permittee is not using a continuous monitoring system (including a COMS, CEMS, or CPMS) to comply with the emission limitations in this subpart, the compliance report must contain the information in Conditions V.G.5.n.4), V.G.5.n.7)A and V.G.5.n.7)B below. This includes periods of startup, shutdown, and malfunction.
   A. The total operating time of each affected source during the reporting period.
   B. Information on the number, duration, and cause of deviations (including unknown cause, if applicable) as applicable and the corrective action taken.

8) For each deviation from an emission limitation occurring at an affected source where the permittee is using a continuous monitoring system (including COMS, CEMS, or CPMS) to comply with the emission limitation 40 CFR 63, Subpart CCCCC, the permittee must include the information in Conditions V.G.5.n.4), V.G.5.n.8)A through V.G.5.n.8)L below. This includes periods of startup, shutdown, and malfunction.
   A. The date and time that each malfunction started and stopped.
   B. The date and time that each continuous monitoring system (including COMS, CEMS, or CPMS) was inoperative, except for zero (low-level) and high-level checks.
   C. The date, time, and duration that each continuous monitoring system (including COMS, CEMS, or CPMS) was out-of-control, including the information in §63.8(c)(8).
   D. The date and time that each deviation started and stopped, and whether each deviation occurred during a period of startup, shutdown, or malfunction or during another period.
   E. A summary of the total duration of the deviation during the reporting period and the total duration as a percent of the total source operating time during that reporting period.
   F. A breakdown of the total duration of the deviations during the reporting period into those that are due to startup, shutdown, control equipment problems, process problems, other known causes, and other unknown causes.
   G. A summary of the total duration of continuous monitoring system downtime during the reporting period and the total duration of continuous monitoring system downtime as a percent of the total source operating time during the reporting period.
   H. An identification of each HAP that was monitored at the affected source.
   I. A brief description of the process units.
   J. A brief description of the continuous monitoring system.
   K. The date of the latest continuous monitoring system certification or audit.
   L. A description of any changes in continuous monitoring systems, processes, or controls since the last reporting period.

o. If the permittee had a startup, shutdown, or malfunction during the semiannual reporting period that was not consistent with the startup, shutdown, and malfunction plan, the permittee must submit an immediate startup, shutdown, and malfunction report according to the requirements in §63.10(d)(5)(ii). [§2103.12.k; §2103.12.h.6; §63.7341(d)]

p. If the permittee submits a compliance report for an affected source along with, or as part of, the semiannual monitoring report required by 40 CFR 70.6(a)(3)(iii)(A), and the compliance report

proposed

includes all the required information concerning deviations from any emission limitation or work practice standard in 40 CFR Part 63, Subpart CCCCC, submission of the compliance report satisfies any obligation to report the same deviations in the semiannual monitoring report. However, submission of a compliance report does not otherwise affect any obligation the permittee may have to report deviations from permit requirements to the Department [§2103.12.k; §2103.12.h.6; §63.7341(e)]

6. Work Practice Standards:

a. At no time shall the permittee operate Coke Oven Battery B unless it is properly operated and maintained according to good engineering and air pollution control practices by performing regular maintenance with the exception of actions to mitigate emergency conditions. [RACT IP 0052-I020b, V.D.1.b; RACT Order No. 234, Condition 1.1; 25 Pa Code §129.99; §2103.12.a.2.B]

b. The permittee shall comply with the provisions of the applicable workpractice requirements in Site level Condition IV.29.a above. [§2103.12.h.6; §63.306]

c. The permittee shall develop and implement according to Condition V.G.6.d below, a written startup, shutdown, and malfunction plan that describes procedures for operating the battery, including associated air pollution control equipment, during a period of a startup, shutdown, or malfunction in a manner consistent with good air pollution control practices for minimizing emissions, and procedures for correcting malfunctioning process and air pollution control equipment as quickly as practicable. All the provisions of Site Level Condition IV.9 above remain applicable and are not superceded by operating in accordance with the startup, shutdown, and malfunction plan. [§2103.12.h.6; §63.310(b)]

d. During a period of startup, shutdown, or malfunction the permittee shall: [§2103.12.h.6; §63.310(c)]

1) Operate the battery (including associated air pollution control equipment) in accordance with the procedure specified in the startup, shutdown, and malfunction plan; and
2) Correct malfunctions as soon as practicable after their occurrence, in accordance with the plan.

e. In order for the provisions of Condition V.G.6.j below to apply with respect to the observation (or set of observations) for a particular day, notification of a startup, shutdown, or a malfunction shall be made by the permittee: [§2103.12.h.6; §63.310(d)]

1) If practicable, to the certified observer if the observer is at the facility during the occurrence; or
2) To the Department, in writing, within 24 hours of the occurrence first being documented by a company employee, and if the notification under Condition V.G.6.e.1) above was not made, an explanation of why no such notification was made.

f. Within 14 days of the notification made under Condition V.G.6.e above, or after a startup or shutdown, the permittee shall submit a written report to the Department that: [§2103.12.h.6; §63.310(e)]
1) Describes the time and circumstances of the startup, shutdown, or malfunction; and
2) Describes actions taken that might be considered inconsistent with the startup, shutdown, or malfunction plan.

proposed

g. The permittee shall maintain a record of internal reports which form the basis of each malfunction notification under Condition V.G.6.e above. [§2103.12.h.6; §63.310(f)]

h. To satisfy the requirements of §63.310 to develop a startup, shutdown, and malfunction plan, the permittee may use the standard operating procedures manual for the battery, provided the manual meets all the requirements in §63.310 and is made available for inspection at reasonable times when requested by the Department. [§2103.12.h.6; §63.310(g)]

i. The Department may require reasonable revisions to a startup, shutdown, and malfunction plan, if the Department finds that the plan: [§2103.12.h.6; §63.310(h)]

1) Does not address a startup, shutdown, or malfunction event that has occurred;
2) Fails to provide for the operation of the source (including associated air pollution control equipment) during a startup, shutdown, or malfunction event in a manner consistent with good air pollution control practices for minimizing emissions; or
3) Does not provide adequate procedures for correcting malfunctioning process and/or air pollution control equipment as quickly as practicable.

j. If the permittee demonstrates to the satisfaction of the Department that a startup, shutdown, or malfunction has occurred, then an observation occurring during such startup, shutdown, or malfunction shall not: [§2103.12.h.6; §63.310(i)]

1) Constitute a violation of relevant requirements of 40 CFR 63, Subpart L;
2) Be used in any compliance determination under §63.309; or
3) Be considered for purposes of Condition IV.29 above, until the Department has resolved the claim that a startup, shutdown, or malfunction has occurred. If the Department determines that a startup, shutdown, or malfunction has not occurred, such observations may be used for purposes of Condition IV.29 above, regardless of whether the permittee further contests such determination. The permittee's receipt of written notification from the Department that a startup, shutdown, or malfunction has not occurred will serve, where applicable under Condition IV.29 above, as written notification from the certified observer that an exceedance has occurred.

k. The permittee shall prepare and operate at all times according to a written work practice plan for soaking. Each plan must include measures and procedures to: [§2103.12.h.6; §63.7294(a)]

1) Train topside workers to identify soaking emissions that require corrective actions.
2) Damper the oven off the collecting main prior to opening the standpipe cap.
3) Determine the cause of soaking emissions that do not ignite automatically, including emissions that result from raw coke oven gas leaking from the collecting main through the damper, and emissions that result from incomplete coking.
4) If soaking emissions are caused by leaks from the collecting main, take corrective actions to eliminate the soaking emissions. Corrective actions may include, but are not limited to, reseating the damper, cleaning the flushing liquor piping, using aspiration, putting the oven back on the collecting main, or igniting the emissions.
5) If soaking emissions are not caused by leaks from the collecting main, notify a designated responsible party. The responsible party must determine whether the soaking emissions are due to incomplete coking. If incomplete coking is the cause of the soaking emissions, the permittee must put the oven back on the collecting main until it is completely coked or the permittee must ignite the emissions.

proposed

l. As provided in §63.6(g), the permittee may request to use an alternative to the work practice standard for soaking in Condition V.G.6.k above. [§2103.12.h.6; §63.7294(b)]

m. The permittee shall be in compliance with the emission limitations, work practice standards, and operation and maintenance requirements of 40 CFR 63, Subpart CCCCC at all times, except during periods of startup, shutdown, and malfunction as defined in §63.2. [§2103.12.h.6; §63.7310(a)]

7. Additional Requirements:

a. The definitions in 40 CFR 63.7352 are hereby incorporated into this permit by reference.

PERMIT SHIELD IN EFFECT

proposed

H. Battery No. B Pushing Emission Control (PEC) Baghouse: P054

Process Description: Coke-side shed with stationary baghouse
Facility ID: P054
Max. Design Rate: 480,000 acfm @ 125ºF
Capacity: 480,000 acfm @ 125ºF
Raw Materials: NA
Control Device: Pulse-jet baghouse

As identified above, Process P054 consists of the following number and type of equipment:

Baghouse Stack Emissions (Battery B)
Fugitive Pushing Emissions
Baghouse Dust Handling (Battery B)

1. Restrictions:

a. The permittee shall not operate, or allow to be operated, Battery B coke ovens unless there is installed on the battery a pushing emission control system baghouse which is designed to reduce fugitive emissions from pushing to the minimum attainable through the use of BACT, nor shall the permittee operate, or allow to be operated Battery B coke ovens in such manner that: [§2105.21.e]

1) At any time, the particulate mass emission rate from the pushing emission control system device, for Battery B exceeds a rate determined by an outlet concentration of 0.040 pounds per ton of coke. [§2105.21.e.3.E; Consent Order Agreement, Condition # 13]

2) Fugitive pushing emissions or emissions from the pushing emission control system device outlet equal or exceed an opacity of 20% at any time, except if the Department determines in writing, upon written application from the person responsible for the coke ovens setting forth all information needed to make such determination, that such emissions are of only minor significance with respect to causing air pollution and do not prevent or interfere with the attainment or maintenance of any ambient air quality standard (any such determination shall be submitted as a proposed revision to Allegheny County's portion of the SIP). [§2105.21.e.4]

b. The permittee shall not operate, or allow to be operated Battery B, unless the PEC System baghouse is properly installed, operated and maintained according to the following conditions, at all times: [§2105.03]

1) Emissions due to the pushing of Battery B coke ovens shall be vented through the PEC System baghouse dust collector.
2) The baghouse shall be equipped with automatic cleaning controls and instrumentation that shall continuously measure the differential pressure drop across the baghouse to within 5.0% of the measuring span of the device.
3) Cleaning, maintenance, etc. shall be conducted as necessary when the pressure drop goes beyond the specified range.

c. The permittee shall not discharge to the atmosphere emissions of particulate matter from a control device applied to pushing emissions from a coke oven battery that exceed 0.01 grain per dry standard cubic foot (gr/dscf). [§2103.12.h.6; §63.7290(a)]

proposed

d. For each PEC System the permittee shall: [§2103.12.h.6; §63.7290(b)(3)]

1) Maintain the daily average fan motor amperes at 15 or above the minimum level established during the most recent performance test; or
2) Maintain the daily average volumetric flow rate at the inlet of the control device at or above the minimum level established during the initial performance test.

e. For each control device applied to pushing emissions and subject to the emission limit in V.H.1.c above, the permittee shall demonstrate continuous compliance by meeting the requirements in Conditions V.H.1.e.1) and V.H.1.e.2) below: [§2103.12.h.6; §63.7333 (a)]

1) Maintaining emissions of particulate matter at or below 0.01 grain per dry standard cubic foot (gr/dscf) ; and
2) Conducting subsequent performance tests to demonstrate continuous compliance no less frequently than once every two years.

f. Emissions from Battery B PEC System baghouse shall not exceed the limits listed in Table V-H- 1 at any time: [§2105.21.e.3; §2105.03; SO_2 SIP IP 0052-I017, Condition V.B.1.c]

TABLE V-H-1 - Emission Limitations for Battery B PEC System Baghouse

POLLUTANT	LB/TON-COKE	HOURLY EMISSION LIMIT (lb/hr)	ANNUAL EMISSION LIMIT (tons/year)*
Particulate Matter	0.040	5.28	23.14
PM_{10}	0.040	5.28	23.14
SO_2**		7.50	32.85

*A year is defined as any consecutive 12-month period.
**SO_2 limit is based on SO_2 SIP IP 0052-I017

2. Testing Requirements:

a. The permittee shall have baghouse particulate emission stack tests conducted to demonstrate compliance with Condition V.H.1.a.1) above. The test shall be conducted once every two years using EPA Methods No.1 through No.5 and performed according to Site Level Condition IV.14. [§2108.02; Consent Order, 6/01/2007, #13; §63.7321]

b. The permittee shall perform or cause to be performed PEC baghouse emission stack tests for SO_2 at least once every two years in accordance with approved EPA methods and performed according to §2108.02 of Article XXI to determine compliance with condition V.H.1.f above. [§2108.02; SO_2 SIP IP 0052-I017, Condition V.B.1.c]

c. Visible emissions observations of the baghouse stack exhaust and fugitive pushing emissions shall be conducted at least once every two years, as specified in Section 109 of the Department's source testing manual, and be done simultaneously with the baghouse stack tests. [§2108.02]

d. The permittee shall conduct each performance test according to the requirements in Condition V.H.2.e. [§2103.12.h.6; §63.7322(a)]

e. To determine compliance with the process weighted mass rate of particulate matter (lb/ton of coke)

proposed

in Condition V.H.1.c above use the following test methods and procedures: [§2103.12.h.6; §63.7322(b)]

1) Determine the concentration of particulate matter according to the following test methods in Appendix A to 40 CFR Part 60. [§2103.12.h.6; §63.7322(b)(1)]
   A. Method 1 to select sampling port locations and the number of traverse points. Sampling sites must be located at the outlet of the control device and prior to any releases to the atmosphere.
   B. Method 2, 2F, or 2G to determine the volumetric flow rate of the stack gas.
   C. Method 3, 3A, or 3B to determine the dry molecular weight of the stack gas.
   D. Method 4 to determine the moisture content of the stack gas.
   E. Method 5 or 5D, as applicable, to determine the concentration of front half particulate matter in the stack gas.
2) During each particulate matter test run, sample only during periods of actual pushing when the capture system fan and control device are engaged. Collect a minimum sample volume of 50 dry standard cubic feet of gas during each test run. Three valid test runs are needed to comprise a performance test. Each run must start at the beginning of a push and finish at the end of a push (i.e., sample for an integral number of pushes) [§2103.12.h.6; §63.7322(b)(2)].
3) Determine the total combined weight in tons of coke pushed during the duration of each test run according to the procedures in the source test plan for calculating coke yield from the quantity of coal charged to an individual oven. [§2103.12.h.6; §63.7322(b)(3)]
4) Compute the process-weighted mass emissions (E_p) for each test run using Equation 1 of this section as follows: [§2103.12.h.6; §63.7322(b)(4)]

$$Ep = \frac{C \times Q \times T}{P \times K}$$

Where:

E_p = Process weighted mass emissions of particulate matter, lb/ton;
C = Concentration of particulate matter, gr/dscf;
Q = Volumetric flow rate of stack gas, dscf/hr;
T = Total time during a run that a sample is withdrawn from the stack during pushing, hr;
P = Total amount of coke pushed during the test run, tons; and
K = Conversion factor, 7,000 gr/lb.

f. For each capture system applied to pushing emissions, the permittee shall establish a site-specific operating limit for the fan motor amperes or volumetric flow rate according to the procedures in ConditionV.H.2.f.1) or V.H.2.f.2) below: [§2103.12.h.6; §63.7323(c)]

1) If the operating limit in V.H.1.d.1) above for fan motor amperes is elected, the permittee shall measure and record the fan motor amperes during each push sampled for each particulate matter test run. The operating limit is the lowest fan motor amperes recorded during any of the three runs that meet the emission limit.
2) If the operating limit in V.H.1.d.2) above for volumetric flow rate is elected, the permittee shall measure and record the total volumetric flow rate at the inlet of the control device during each push sampled for each particulate matter test run. the operating limit is the lowest volumetric flow rate recorded during any of the three runs that meet the emission limit.

g. The permittee may change the operating limit for a capture system if the requirements in Conditions

proposed

V.H.2.g.1) through V.H.2.g.3) below below are met: [§2103.12.h.6; §63.7323(e)]

1) Submit a written notification to the Department of the request to conduct a new performance test to revise the operating limit.
2) Conduct a performance test to demonstrate that emissions of particulate matter from the control device do not exceed the applicable limit in §63.7290(a).
3) Establish revised operating limits according to the applicable procedures in Condition V.H.2.f above above

h. The Department reserves the right to require additional emissions testing sufficient to assure compliance with the terms and conditions of this permit. Such testing shall be performed in accordance with Site Level Condition IV.14 above and Article XXI §2108.02. [§2103.12.h.1]

3. Monitoring Requirements:

a. The permittee shall continuously monitor and record the differential pressure drop across each baghouse module. [§2103.12.i; §2103.12.h.1; §2103.12.i]

b. The permittee shall inspect the Battery B PEC System weekly to insure compliance with conditions V.H.1.b above. [§2103.12.i; §2103.12.h.1; §2103.12.i]

c. The permittee shall record the number of pushes per day and the amount of coal charged daily for each Battery Unit. [§2103.12.i; SO_2 SIP IP 0052-I017, Condition V.B.3.b]

d. The permittee shall meet each of the following requirements for each coke oven battery: [§2103.12.i; §63.7291(a)]

1) Observe and record the opacity of fugitive pushing emissions from each oven at least once every 90 days. If an oven cannot be observed during a 90-day period due to circumstances that were not reasonably avoidable, the permittee must observe the opacity of the first push of that oven following the close of the 90-day period that is capable of being observed in accordance with the procedures in §63.7334(a), and the permittee must document why the oven was not observed within a 90-day period. All opacity observations of fugitive pushing emissions for batteries with vertical flues must be made using the procedures in §63.7334(a).

2) Observe and record the opacity of fugitive pushing emissions for at least four consecutive pushes per battery each day. Exclude any push during which the observer's view is obstructed or obscured by interferences and observe the next available push to complete the set of four pushes. If necessary due to circumstances that were not reasonably avoidable, the permittee may observe fewer than four consecutive pushes in a day; however, the permittee must observe and record as many consecutive pushes as possible and document why four consecutive pushes could not be observed. The permittee may observe and record one or more non-consecutive pushes in addition to any consecutive pushes observed in a day.
3) Do not alter the pushing schedule to change the sequence of consecutive pushes to be observed on any day. Keep records indicating the legitimate operational reason for any change in the pushing schedule which results in a change in the sequence of consecutive pushes observed on any day.

4) If the average opacity for any individual push exceeds 30 percent opacity for any short battery or 35 percent opacity for any tall battery, the permittee must take corrective action and/or

proposed

increase coking time for that oven. The permittee must complete corrective action or increase coking time within either 10 calendar days or the number of days determined using the following equation, whichever is greater:

$$X = 0.55 \times Y$$

Where:
X = Number of calendar days allowed to complete corrective action or increase coking time; and
Y = Current coking time for the oven, hours.

For the purpose of determining the number of calendar days allowed under this equation, day one is the first day following the day the permittee observed an opacity in excess of 30 percent for any short battery or 35 percent for any tall battery. Any fraction produced by this equation must be counted as a whole day. Days during which the oven is removed from service are not included in the number of days allowed to complete corrective action.

5) The permittee shall demonstrate that:

A. The corrective action and/or increased coking time was successful. After a period of time no longer than the number of days allowed in condition V.H.3.d.4) above, observe and record the opacity of the first two pushes for the oven capable of being observed using the procedures in §63.7334(a). The corrective action and/or increased coking time was successful if the average opacity for each of the two pushes is 30 percent or less for a short battery or 35 percent or less for a tall battery. If the corrective action and/or increased coking time was successful, the permittee may return the oven to the 90-day reading rotation described in condition V.H.3.d.1) above. If the average opacity of either push exceeds 30 percent for a short battery or 35 percent for a tall battery, the corrective action and/or increased coking time was unsuccessful, and the permittee must complete additional corrective action and/or increase coking time for that oven within the number of days allowed in condition V.H.3.d.4) above.

B. After implementing any additional corrective action and/or increased coking time required under condition V.H.3.d.5)A or V.H.3.d.6)A below, the permittee must demonstrate that corrective action and/or increased coking time was successful. After a period of time no longer than the number of days allowed in condition V.H.3.d.4) above, the permittee must observe and record the opacity of the first two pushes for the oven capable of being observed using the procedures in §63.7334(a). The corrective action and/or increased coking time was successful if the average opacity for each of the two pushes is 30 percent or less for a short battery or 35 percent or less for a tall battery. If the corrective action and/or increased coking time was successful, the permittee may return the oven to the 90-day reading rotation described in paragraph V.H.3.d.1) above. If the average opacity of either push exceeds 30 percent for a short battery or 35 percent for a tall battery, the corrective action and/or increased coking time was unsuccessful, and the permittee must follow the procedures in paragraph V.H.3.d.5)C below.

C. If the corrective action and/or increased coking time was unsuccessful as described in condition V.H.3.d.5)B above, the permittee must repeat the procedures in paragraph V.H.3.d.5)B above until the corrective action and/or increased coking time is successful. The permittee must report to the Department as a deviation each unsuccessful attempt at corrective action and/or increased coking time under paragraph V.H.3.d.5)B above.

proposed

6) If at any time the permittee places an oven on increased coking time as a result of fugitive pushing emissions that exceed 30 percent for a short battery or 35 percent for a tall battery, the permittee must keep the oven on the increased coking time until the oven qualifies for decreased coking time using one of the following procedures:

A. To qualify for a decreased coking time for an oven placed on increased coking time in accordance with condition V.H.3.d.4) or V.H.3.d.5) above, the permittee must operate the oven on the decreased coking time. After no more than two coking cycles on the decreased coking time, the permittee must observe and record the opacity of the first two pushes that are capable of being observed using the procedures in §63.7334(a). If the average opacity for each of the two pushes is 30 percent or less for a short battery or 35 percent or less for a tall battery, the permittee may keep the oven on the decreased coking time and return the oven to the 90-day reading rotation described in condition V.H.3.d.1) above. If the average opacity of either push exceeds 30 percent for a short battery or 35 percent for a tall battery, the attempt to qualify for a decreased coking time was unsuccessful. The permittee must then return the oven to the previously established increased coking time, or implement other corrective action(s) and/or increased coking time. If the permittee implement other corrective action and/or a coking time that is shorter than the previously established increased coking time, the permittee must follow the procedures in condition V.H.3.d.5)B above to confirm that the corrective action(s) and/or increased coking time was successful.

B. If the attempt to qualify for decreased coking time was unsuccessful as described in condition V.H.3.d.6)A above, the permittee may again attempt to qualify for decreased coking time for the oven. To do this, the permittee must operate the oven on the decreased coking time. After no more than two coking cycles on the decreased coking time, the permittee must observe and record the opacity of the first two pushes that are capable of being observed using the procedures in §63.7334(a). If the average opacity for each of the two pushes is 30 percent or less for a short battery or 35 percent or less for a tall battery, the permittee may keep the oven on the decreased coking time and return the oven to the 90-day reading rotation described in condition V.H.3.d.1) above. If the average opacity of either push exceeds 30 percent for a short battery or 35 percent for a tall battery, the attempt to qualify for a decreased coking time was unsuccessful. The permittee must then return the oven to the previously established increased coking time, or implement other corrective action(s) and/or increased coking time. If the permittee implement other corrective action and/or a coking time that is shorter than the previously established increased coking time, the permittee must follow the procedures in condition V.H.3.d.5)B above to confirm that the corrective action(s) and/or increased coking time was successful.

C. The permittee must report to the Department as a deviation the second and any subsequent consecutive unsuccessful attempts on the same oven to qualify for decreased coking time as described in paragraph V.H.3.d.6)B above.

e. As provided in §63.6(g), the permittee may request to use an alternative to the work practice standards in Condition V.H.3.d above. [§2103.12.i; §2103.12.h.6; §63.7291(b)]

f. The permittee shall prepare and operate at all times according to a written operation and maintenance plan for each capture system and control device applied to pushing emissions from coke battery(s). Each plan must address at a minimum the following elements. [§2103.12.i; §2103.12.h.6; §63.7300(c)]

proposed

1) Monthly inspections of the equipment that are important to the performance of the total capture system (e.g., pressure sensors, dampers, and damper switches). This inspection must include observations of the physical appearance of the equipment (e.g., presence of holes in ductwork or hoods, flow constrictions caused by dents or accumulated dust in ductwork, and fan erosion). In the event a defect or deficiency is found in the capture system (during a monthly inspection or between inspections), the permittee must complete repairs within 30 days after the date that the defect or deficiency is discovered. If the permittee determines that the repairs cannot be completed within 30 days, the permittee must submit a written request for an extension of time to complete the repairs that must be received by the Department not more than 20 days after the date that the defect or deficiency is discovered. The request must contain a description of the defect or deficiency, the steps needed and taken to correct the problem, the interim steps being taken to mitigate the emissions impact of the defect or deficiency, and a proposed schedule for completing the repairs. The request shall be deemed approved unless and until such time as the Department notifies the permittee that it objects to the request. The Department may consider all relevant factors in deciding whether to approve or deny the request (including feasibility and safety). Each approved schedule must provide for completion of repairs as expeditiously as practicable, and the Department may request modifications to the proposed schedule as part of the approval process.

2) Preventative maintenance for each control device, including a preventative maintenance schedule that is consistent with the manufacturer's instructions for routine and long-term maintenance.

3) Corrective action for all baghouses applied to pushing emissions. In the event a bag leak detection system alarm is triggered, the permittee must initiate corrective action to determine the cause of the alarm within 1 hour of the alarm, initiate corrective action to correct the cause of the problem within 24 hours of the alarm, and complete the corrective action as soon as practicable. Actions may include, but are not limited to:
   A. Inspecting the baghouse for air leaks, torn or broken bags or filter media, or any other condition that may cause an increase in emissions.
   B. Sealing off defective bags or filter media.
   C. Replacing defective bags or filter media or otherwise repairing the control device.
   D. Sealing off a defective baghouse compartment.
   E. Cleaning the bag leak detection system probe, or otherwise repairing the bag leak detection system.
   F. Shutting down the process producing the particulate emissions

g. For the PEC system baghouse applied to pushing emissions from a coke oven battery, the permittee shall at all times monitor the relative change in particulate matter loadings using a bag leak detection system according to the requirements in V.H.3.h below and conduct inspections at their specified frequency according to the following requirements: [§2103.12.i; §2103.12.h.6; §63.7330(a)]
   1) Monitor the pressure drop across each baghouse cell each day to ensure pressure drop is within the normal operating range identified in the manual;
   2) Confirm that dust is being removed from hoppers through weekly visual inspections or equivalent means of ensuring the proper functioning of removal mechanisms;
   3) Check the compressed air supply for pulse-jet baghouses each day;
   4) Monitor cleaning cycles to ensure proper operation using an appropriate methodology;
   5) Check bag cleaning mechanisms for proper functioning through monthly visual inspection or equivalent means;

proposed

6) Make monthly visual checks of bag tension on reverse air and shaker-type baghouses to ensure that bags are not kinked (kneed or bent) or laying on their sides. The permittee does not have to make this check for shaker-type baghouses using self-tensioning (spring-loaded) devices;
7) Confirm the physical integrity of the baghouse through quarterly visual inspections of the baghouse interior for air leaks; and
8) Inspect fans for wear, material buildup, and corrosion through quarterly visual inspections, vibration detectors, or equivalent means.

h. The permittee shall install, operate, and maintain a bag leak detection system on the PEC baghouse system according to the following requirements: [§2103.12.i; §2103.12.h.6; §63.7331(a)]

1) The system must be certified by the manufacturer to be capable of detecting emissions of particulate matter at concentrations of 10 milligrams per actual cubic meter (0.0044 grains per actual cubic foot) or less;
2) The system must provide output of relative changes in particulate matter loadings;
3) The system must be equipped with an alarm that will sound when an increase in relative particulate loadings is detected over a preset level. The alarm must be located such that it can be heard by the appropriate plant personnel;
4) Each system that works based on the triboelectric effect must be installed, operated, and maintained in a manner consistent with the guidance document, ``Fabric Filter Bag Leak Detection Guidance'' (EPA-454/R-98-015, September 1997). The permittee may install, operate, and maintain other types of bag leak detection systems in a manner consistent with the manufacturer's written specifications and recommendations;
5) To make the initial adjustment of the system, establish the baseline output by adjusting the sensitivity (range) and the averaging period of the device. Then, establish the alarm set points and the alarm delay time;
6) Following the initial adjustment, do not adjust the sensitivity or range, averaging period, alarm set points, or alarm delay time, except as detailed in the operation and maintenance plan. Do not increase the sensitivity by more than 100 percent or decrease the sensitivity by more than 50 percent over a 365-day period unless a responsible official certifies, in writing, that the baghouse has been inspected and found to be in good operating condition; and
7) Where multiple detectors are required, the system's instrumentation and alarm may be shared among detectors.

i. For each CPMS required inV.H.3.n below, the permittee must develop and make available for inspection upon request by the Department a site-specific monitoring plan that addresses the requirements in Conditions V.H.3.i.1) through V.H.3.i.6) below: [§2103.12.i; §2103.12.h.6; §63.7331(b)]

1) Installation of the CPMS sampling probe or other interface at a measurement location relative to each affected process unit such that the measurement is representative of control of the exhaust emissions (e.g., on or downstream of the last control device);
2) Performance and equipment specifications for the sample interface, the parametric signal analyzer, and the data collection and reduction system;
3) Performance evaluation procedures and acceptance criteria (e.g., calibrations);
4) Ongoing operation and maintenance procedures in accordance with the general requirements of §63.8(c)(1), (3), (4)(ii), (7), and (8);
5) Ongoing data quality assurance procedures in accordance with the general requirements of §63.8(d); and
6) Ongoing recordkeeping and reporting procedures in accordance the general requirements of

proposed

§63.10(c), (e)(1), and (e)(2)(i).

j. The permittee shall conduct a performance evaluation of each CPMS in accordance with the permitteer site-specific monitoring plan. [§2103.12.i; §2103.12.h.6; §63.7331(c)]

k. The permittee shall operate and maintain each CPMS in continuous operation according to the site-specific monitoring plan. [§2103.12.i; §2103.12.h.6; §63.7331(d)]

l. If the permittee elects the operating limit in V.H.1.d.1) above for a capture system applied to pushing emissions, the permittee must install, operate, and maintain a device to measure the fan motor amperes. [§2103.12.i; §2103.12.h.6; §63.7331(g)]

m. If the permittee elects the operating limit in V.H.1.d.2) above for a capture system applied to pushing emissions, the permittee must install, operate, and maintain a device to measure the total volumetric flow rate at the inlet of the control device. [§2103.12.i; §2103.12.h.6; §63.7331(h)]

n. For each capture system applied to pushing emissions, the permittee shall at all times monitor the fan motor amperes according to the requirements in Condition V.H.3.l above or the volumetric flow rate according to the requirements in Condition V.H.3.m above. [§2103.12.i; §2103.12.h.6; §63.7330(d)]

o. Except for monitor malfunctions, associated repairs, and required quality assurance or control activities (including as applicable, calibration checks and required zero and span adjustments), the permittee shall monitor continuously (or collect data at all required intervals) at all times the affected source is operating. [§2103.12.i; §2103.12.h.6; §63.7332(a)]

p. The permittee shall not use data recorded during monitoring malfunctions, associated repairs, and required quality assurance or control activities in data averages and calculations used to report emission or operating levels, or in fulfilling a minimum data availability requirement, if applicable. The permittee shall use all the data collected during all other periods in assessing compliance. A monitoring malfunction is any sudden, infrequent, not reasonably preventable failure of the monitor to provide valid data. Monitoring failures that are caused in part by poor maintenance or careless operation are not malfunctions. [§2103.12.i; §2103.12.h.6; §63.7332(b)]

q. For each capture system applied to pushing emissions and subject to the operating limit in Condition V.H.1.d above, the permittee shall demonstrate continuous compliance by meeting the requirements in Condition V.H.3.q.1) or V.H.3.q.2) below: [§2103.12.i; §2103.12.h.6; §63.7333(d)]

1) If the permittee elects the operating limit for fan motor amperes in V.H.1.d.1) above:
   A. Maintaining the daily average fan motor amperes at or above the minimum level established during the initial or subsequent performance test; and
   B. Checking the fan motor amperes at least every 8 hours to verify the daily average is at or above the minimum level established during the initial or subsequent performance test and recording the results of each check.
2) If the permittee elects the operating limit for volumetric flow rate in V.H.1.d.2) above:
   A. Maintaining the daily average volumetric flow rate at the inlet of the control device at or above the minimum level established during the initial or subsequent performance test; and
   B. Checking the volumetric flow rate at least every 8 hours to verify the daily average is at or above the minimum level established during the initial or subsequent performance test and

proposed

recording the results of each check.

r. The permittee shall demonstrate continuous compliance with the work practice standards for fugitive pushing emissions according to the following requirements: [§2103.12.i; §2103.12.h.6; §63.7334(a)]

1) Observe and record the opacity of fugitive emissions for four consecutive pushes per operating day, except the permittee may make fewer or non-consecutive observations as permitted by Condition V.H.3.d.2) above. Maintain records of the pushing schedule for each oven and records indicating the legitimate operational reason for any change in the pushing schedule according to Condition V.H.3.d.3) above.
2) Observe and record the opacity of fugitive emissions from each oven in a battery at least once every 90 days. If an oven cannot be observed during a 90-day period, observe and record the opacity of the first push of that oven following the close of the 90-day period that can be read in accordance with the procedures in conditionsV.H.3.r.1) through V.H.3.r.8).
3) Make all observations and calculations for opacity observations of fugitive pushing emissions in accordance with Method 9 in Appendix A to 40 CFR Part 60 using a Method 9 certified observer unless the permittee has an approved alternative procedure under V.H.3.r.7) below.
4) Record pushing opacity observations at 15-second intervals as required in section 2.4 of Method 9 (Appendix A to 40 CFR Part 60). The requirement in section 2.4 of Method 9 for a minimum of 24 observations does not apply, and the data reduction requirements in section 2.5 of Method 9 do not apply. The requirement in §63.6(h)(5)(ii) for obtaining at least 3 hours of observations (thirty 6-minute averages) to demonstrate initial compliance does not apply.
5) If fewer than six but at least four 15-second observations can be made, use the average of the total number of observations to calculate average opacity for the push. Missing one or more observations during the push (e.g., as the quench car passes behind a building) does not invalidate the observations before or after the interference for that push. However, a minimum of four 15-second readings must be made for a valid observation.
6) Begin observations for a push at the first detectable movement of the coke mass. End observations of a push when the quench car enters the quench tower.
   A. For a battery with a coke-side shed, the observer must be in a position that provides an unobstructed view and avoids interferences from the topside of the battery. Typical interferences to avoid include emissions from open standpipes and charging. Observations must include any fugitive emissions that escape from the top of the shed, from the ends of the shed, or from the area where the shed is joined to the battery. If the observer does not have a clear view to identify when a push starts or ends, a second person can be positioned to signal the start or end of the push and notify the observer when to start or end the observations. Radio communications with other plant personnel (e.g., pushing ram operator or quench car operator) may also serve to notify the observer of the start or end of a push. Record the oven number of any push not observed because of obstructions or interferences.
   B. The permittee may reposition after the push to observe emissions during travel if necessary.
7) If it is infeasible to implement the procedures in Conditions V.H.3.r.1) through V.H.3.r.6) above for an oven due to physical obstructions, nighttime pushes, or other reasons, the permittee may apply to the Department for permission to use an alternative procedure. The application must provide a detailed explanation of why it is infeasible to use the procedures in Conditions V.H.3.r.1) through V.H.3.r.6) above, identify the oven and battery numbers, and describe the alternative procedure. An alternative procedure must identify whether the coke in that oven is not completely coked, either before, during, or after an oven is pushed.

8) For each oven observed that exceeds an opacity of 30 percent for any short battery or 35 percent for any tall battery, the permittee must take corrective action and/or increase the coking time

proposed

in accordance with Condition V.H.3.d above. Maintain records documenting conformance with Condition V.H.3.d above.

s. To demonstrate continuous compliance with the operation and maintenance requirements for a baghouse applied to pushing emissions from a coke oven battery in V.H.3.h above, the permittee shall inspect and maintain each baghouse according to the requirements in Conditions V.H.3.h.1) through V.H.3.h.7) above and record all information needed to document conformance with these requirements. If the permittee increases or decreases the sensitivity of the bag leak detection system beyond the limits specified in ConditioV.H.3.h.6) above, the permittee must include a copy of the required written certification by a responsible official in the next semiannual compliance report. [§2103.12.i; §2103.12.h.6; §63.7335(c)]

4. Record Keeping Requirements:

a. The results of the inspections required by condition V.H.3.b above shall be recorded weekly along with the differential pressure drop across the baghouse [§2103.12.j.1].

b. Episodes of non-compliance with conditions V.H.1.a through V.H.1.f and V.H.3.b above and corrective actions taken shall be recorded upon occurrence. [§2103.12.j; §2103.12.h.1]

c. The permittee shall keep records of each baghouse maintenance inspection and repair, replacement or other corrective action. [§2103.12.j.1]

d. The permittee shall keep the following records: [§2103.12.j; §2103.12.h.6; §63.7342(a)]

1) A copy of each notification and report that was submitted to comply with this subpart, including all documentation supporting any initial notification or notification of compliance status that was submitted, according to the requirements in §63.10(b)(2)(xiv).
2) The records in §63.6(e)(3)(iii) through (v) related to startup, shutdown, and malfunction.
3) Records of performance tests, performance evaluations, and opacity observations as required in §63.10(b)(2)(viii).

e. For each COMS or CEMS, the permittee shall keep the following records. [§2103.12.j; §2103.12.h.6; §63.7342(b)]

1) Records described in §63.10(b)(2)(vi) through (xi).
2) Monitoring data for COMS during a performance evaluation as required in §63.6(h)(7)(i) and (ii).
3) Previous (that is, superceded) versions of the performance evaluation plan as required in §63.8(d)(3).
4) Records of the date and time that each deviation started and stopped and whether the deviation occurred during a period of startup, shutdown, or malfunction or during another period.

f. The permittee shall keep the records in §63.6(h)(6) for visual observations. [§2103.12.j; §2103.12.h.6; §63.7342(c)]

g. The permittee shall keep the records required in Conditions V.H.3.q through V.H.3.s above and V.H.4.k through V.H.4.m below to show continuous compliance with each emission limitation, work practice standard, and operation and maintenance requirement that applies. [§2103.12.j; §2103.12.h.6; §63.7342(d)]

proposed

h. The permittee shall keep records in a form suitable and readily available for expeditious review, according to §63.10(b)(1). [§2103.12.j; §2103.12.h.6; §63.7343(a)]

i. As specified in §63.10(b)(1), the permittee shall keep each record for 5 years following the date of each occurrence, measurement, maintenance, corrective action, report, or record. [§2103.12.j; §2103.12.h.6; §63.7343(b)]

j. The permittee shall keep each record on site for at least 2 years after the date of each occurrence, measurement, maintenance, corrective action, report, or record, according to §63.10(b)(1). The permittee can keep the records offsite for the remaining 3 years. [§2103.12.j; §2103.12.h.6; §63.7343(c)]

k. For each coke oven battery with a capture system or control device applied to pushing emissions, the permittee shall demonstrate continuous compliance with the operation and maintenance requirements in Condition V.H.3.f.1) above by meeting the following requirements: [§2103.12.j; §2103.12.h.6; §63.7335(b)]

1) Making monthly inspections of capture systems according to Condition V.H.3.f.1) above and recording all information needed to document conformance with these requirements; Performing preventative maintenance for each control device according to Condition V.H.3.f.2) above and recording all information needed to document conformance with these requirements; and
2) Initiating and completing corrective action for a bag leak detection system alarm according to Condition V.H.3.f.3) and recording all information needed to document conformance with these requirements. This includes records of the times the bag leak detection system alarm sounds, and for each valid alarm, the time corrective action was initiated, the corrective action(s) taken, and the date on which corrective action is completed.

l. The permittee shall inspect and maintain the pushing emission control baghouse as required in V.H.3.h.1) through V.H.3.h.7) above and record all information needed to document conformance with these requirements. If the permittee increases or decreases the sensitivity of the bag leak detection system beyond the limits specified in V.H.3.h.6) above, the permittee must include a copy of the required written certification by a responsible official in the next semiannual compliance report. [§2103.12.j; §63.7335(c)]

m. The permittee shall maintain a current copy of the operation and maintenance plans required in §63.7300(b) and (c) onsite and available for inspection upon request. The plans shall be kept for the life of the affected source or until the affected source is no longer subject to the requirements of 40 CFR Part 63, Subpart CCCCC. [§2103.12.j; §63.7335(d)]

5. Reporting Requirements:

a. The permittee shall report all instances of non-compliance with conditions V.H.1.a through V.H.1.f, V.H.3.a and V.H.3.b, and V.H.4.a through V.H.4.c above along with all corrective action taken to restore the subject equipment to compliance, to the Department every six months. [§2103.12.k.1]

b. Reporting instances of non-compliance in accordance with condition V.H.5.a above does not relieve the permittee of the requirement to report breakdowns in accordance with Site Level Condition 5, if appropriate. [§2103.12.k.1; §2108.01.c.]

proposed

c. No later than twenty (20) days after the end of each month, a written report of a summary of the following during each such month shall be submitted to the Department: [§2103.12.k; §2109.03; Enforcement Order 202.E, 3/28/90]

1) For each individual coke battery or group of batteries served by the same push emission control system, and for all coke batteries combined:

A. The total number of pushes for the month;
B. The total number of controlled pushes for the month; and the monthly percentage availability (on-line time) of the pushing control system, based on the total number of pushes and total number of controlled pushes.

2) For each outage of the pushing control system at each individual coke battery or group of batteries served by the same pushing emission control system:

A. The batteries affected;
B. The starting and ending dates and times;
C. The total time of each outage, to the nearest tenth of an hour;
D. The corresponding Department Breakdown Number; and the reason(s) or cause(s) for the outage.

d. The permittee shall report each instance in which each emission limitation in Conditions, V.H.1.c, V.H.1.d and V.H.1.e was not met. This includes periods of startup, shutdown, and malfunction. The permittee shall also report each instance in which the permittee did not meet each work practice standard or operation and maintenance requirement in Conditions V.H.6.a, V.H.6.b and V.H.6.c. These instances are deviations from the emission limitations (including operating limits), work practice standards, and operation and maintenance requirements of 40 CFR Part 63, Subpart CCCCC. These deviations must be reported according to the requirements in V.H.5.h through V.H.5.k below. [§2103.12.k; §2103.12.h.6; §63.7336(a)]

e. During periods of startup, shutdown, and malfunction, the permittee must operate in accordance with the startup, shutdown, and malfunction plan. [§2103.12.k; §2103.12.h.6; §63.7336(b)]

1) Consistent with §63.6(e) and 63.7(e)(1), deviations that occur during a period of startup, shutdown, or malfunction are not violations if the permittee demonstrates to the Department's satisfaction that operation was in accordance with the startup, shutdown, and malfunction plan.
2) The Department will determine whether deviations that occur during a period of startup, shutdown, or malfunction are violations, according to the provisions in §63.6(e).

f. The permittee shall submit all of the notifications in §63.6(h)(4) and (5), 63.7(b) and (c), 63.8(e) and (f)(4), and 63.9(b) through (h) that apply by the specified dates. [§2103.12.k; §2103.12.h.6; §63.7340(a)]

g. The permittee shall submit a notification of intent to conduct a performance test at least 60 calendar days before the performance test is scheduled to begin as required in §63.7(b)(1). [§2103.12.k; §2103.12.h.6; §63.7340(d)]

h. The permittee must submit semiannual compliance reports for the PEC stacks to the Department according to General Condition III.15 above. All semiannual compliance reports must be postmarked or delivered no later than July 31 or January 31, whichever date is the first date

proposed

following the end of the semiannual reporting period.: [§2103.12.k; §2103.12.h.6; §63.7341(a)]
1)

i. Each semiannual compliance report must provide information on compliance with the emission limitations, work practice standards, and operation and maintenance requirements for all affected sources except battery stacks. The reports must include the information in V.H.5.i.1) through V.H.5.i.3) below, and as applicable, Conditions V.H.5.i.4) through V.H.5.i.8) below. [§2103.12.k; §2103.12.h.6; §63.7341(c)]

1) Company name and address.
2) Statement by a responsible official, with the official's name, title, and signature, certifying the truth, accuracy, and completeness of the content of the report.
3) Date of report and beginning and ending dates of the reporting period.
4) If there was a startup, shutdown, or malfunction during the reporting period and the permittee took actions consistent with the startup, shutdown, and malfunction plan, the compliance report must include the information in §63.10(d)(5)(i).
5) If there were no deviations from the continuous compliance requirements in Conditions V.H.3.q through V.H.3.s above and V.H.4.k through V.H.4.m above, a statement that there were no deviations from the emission limitations, work practice standards, or operation and maintenance requirements during the reporting period.
6) If there were no periods during which a continuous monitoring system (including COMS, continuous emission monitoring system (CEMS), or CPMS) was out-of-control as specified in §63.8(c)(7), a statement that there were no periods during which a continuous monitoring system was out-of-control during the reporting period.
7) For each deviation from an emission limitation in 40 CFR 63, Subpart CCCCC) and for each deviation from the requirements for work practice standards in 40 CFR Part 63, Subpart CCCCC that occurs at an affected source where the permittee is not using a continuous monitoring system (including a COMS, CEMS, or CPMS) to comply with the emission limitations in this subpart, the compliance report must contain the information in Conditions V.H.5.i.4), V.H.5.i.7)A and V.H.5.i.7)B below. This includes periods of startup, shutdown, and malfunction.
   A. The total operating time of each affected source during the reporting period.
   B. Information on the number, duration, and cause of deviations (including unknown cause, if applicable) as applicable and the corrective action taken.

8) For each deviation from an emission limitation occurring at an affected source the permittee is using a continuous monitoring system (including COMS, CEMS, or CPMS) to comply with the emission limitation 40 CFR 63, Subpart CCCCC, the permittee must include the information in Conditions V.H.5.i.4), V.H.5.i.8)A through V.H.5.i.8)L below. This includes periods of startup, shutdown, and malfunction.
   A. The date and time that each malfunction started and stopped.
   B. The date and time that each continuous monitoring system (including COMS, CEMS, or CPMS) was inoperative, except for zero (low-level) and high-level checks.
   C. The date, time, and duration that each continuous monitoring system (including COMS, CEMS, or CPMS) was out-of-control, including the information in §63.8(c)(8).
   D. The date and time that each deviation started and stopped, and whether each deviation occurred during a period of startup, shutdown, or malfunction or during another period.
   E. A summary of the total duration of the deviation during the reporting period and the total duration as a percent of the total source operating time during that reporting period.
   F. A breakdown of the total duration of the deviations during the reporting period into those

proposed

that are due to startup, shutdown, control equipment problems, process problems, other known causes, and other unknown causes.

G. A summary of the total duration of continuous monitoring system downtime during the reporting period and the total duration of continuous monitoring system downtime as a percent of the total source operating time during the reporting period.
H. An identification of each HAP that was monitored at the affected source.
I. A brief description of the process units.
J. A brief description of the continuous monitoring system.
K. The date of the latest continuous monitoring system certification or audit.
L. A description of any changes in continuous monitoring systems, processes, or controls since the last reporting period.

j. If the permittee had a startup, shutdown, or malfunction during the semiannual reporting period that was not consistent with the startup, shutdown, and malfunction plan, the permittee must submit an immediate startup, shutdown, and malfunction report according to the requirements in §63.10(d)(5)(ii). [§2103.12.k; §2103.12.h.6; §63.7341(d)]

k. If the permittee submits a compliance report for an affected source along with, or as part of, the semiannual monitoring report required by 40 CFR 70.6(a)(3)(iii)(A), and the compliance report includes all the required information concerning deviations from any emission limitation or work practice standard in 40 CFR Part 63, Subpart CCCCC, submission of the compliance report satisfies any obligation to report the same deviations in the semiannual monitoring report. However, submission of a compliance report does not otherwise affect any obligation the permittee may have to report deviations from permit requirements to the Department. [§2103.12.k; §2103.12.h.6; §63.7341(e)]

6. Work Practice Standards:

a. The permittee shall develop and implement a written startup, shutdown, and malfunction plan according to the provisions in 40 CFR 63, Subpart A, §63.6(e)(3). [§2103.12.h.6; §63.7310(c)].

b. As required by §63.6(e)(1)(i), the permittee shall operate and maintain each coke battery including air pollution control and monitoring equipment, in a manner consistent with good air pollution control practices for minimizing emissions at least to the levels required by 40 CFR Part 63, Subpart CCCCC. [§2103.12.h.6; §63.7300(a)]

c. The permittee shall be in compliance with the emission limitations, work practice standards, and operation and maintenance requirements of 40 CFR 63, Subpart CCCCC at all times, except during periods of startup, shutdown, and malfunction as defined in §63.2. [§2103.12.h.6; §63.7310(a)]

d. At no time shall the permittee operate the Battery B PEC system unless it is properly operated and maintained according to good engineering and air pollution control practices by performing regular maintenance with the exception of actions to mitigate emergency conditions. [RACT IP 0052-I020b, V.D.1.b; RACT Order No. 234, Condition 1.1; 25 Pa Code §129.99; §2103.12.a.2.B]

7. Additional Requirements:

a. The definitions in 40 CFR 63.7352 are hereby incorporated into this permit by reference.

PERMIT SHIELD IN EFFECT

proposed

I. Coke Oven Battery C: P046

Process Description:	Coke Battery C
Facility ID:	P046
Max. Design Rate/Units:	1,379,059 tons of coal charged /year
Capacity:	1,107,384 tons of coke/year
Raw Materials:	coal, coke oven gas, recycled coke plant materials
Control Device(s):	PROven® system, Pushing Emission Control Baghouse

1. Restrictions:

a. The permittee shall not operate C Battery coke ovens unless the PROven® System is installed and operating in such manner that the collector main is maintained at a negative pressure and each individual oven is maintained at the lowest positive pressure necessary to inhibit leaks of raw coke oven gas to the atmosphere from oven doors, charging port lids, and offtakes. [IP 0052-I011b, Condition V.A.1.a; RACT IP 0052-I020b, Condition V.D.1.d; 25 Pa Code §129.99; §2103.12.h.6; §2102.04.b.5]

b. The permittee shall not operate, or allow to be operated C Battery coke ovens in such manner that the aggregate of visible charging emissions exceeds a total of 55 seconds during any five (5) consecutive charges on such battery. [IP 0052-I011b, Condition V.A.1.b; §2103.12.h.6]

c. The permittee shall not operate, or allow to be operated, C Battery coke ovens in such manner, at any time, there are visible emissions from more than three percent (3%) of the door areas of the operating coke ovens in such battery, excluding the two door areas of the last oven charged and any door areas obstructed from view. [§2105.21.b.1; IP 0052-I011b, Condition V.A.1.c: §2103.12.h.6]

d. The permittee shall not operate, or allow to be operated, C Battery coke ovens in such manner that emissions from the door areas of any coke oven exceed an opacity of 30% at any time 15 or more minutes after such oven has been charged. [IP 0052-I011b, Condition V.A.1.c; §2103.12.h.6; §2105.21.b.4]

e. The permittee shall not operate, or allow to be operated C Battery coke ovens in such manner that, at any time, there are visible emissions from more than (0.6%) of the charging ports or charging port seals on the operating coke ovens of such battery. [IP 0052-I011b, Condition V.A.1.e; §2103.12.h.6; §2105.21.c]

f. The permittee shall not operate, or allow to be operated, C Battery coke ovens in such manner that, at any time, there are visible emissions from more than three percent (3%) of the offtake piping on the operating coke ovens of such battery. Compliance with this requirement assures compliance with §2105.21.d [§2105.21.d; IP 0052-I011b, Condition V.A.1.f]

g. The permittee shall not operate, or allow to be operated, C Battery coke ovens in such manner that, at any time, there are visible emissions from any open standpipe in excess of 10%. An exclusion from this opacity limit shall be allowed for 2 minutes immediately following the opening of the standpipe cap. [§2102.04.b.4; IP 0052-I011b, Condition V.A.1.g]

h. The permittee shall not operate, or allow to be operated, Coke Oven Battery C unless there is installed on such battery a pushing emission control device which is designed to reduce fugitive

proposed

emissions from pushing to the minimum attainable through the use of BACT, nor shall any person operate, or allow to be operated any battery of coke ovens in such manner that: [IP 0052-I011b, Condition V.A.1.h; 2105.21.e]

1) Fugitive pushing emissions or emissions from the pushing emission control device outlet equal or exceed an opacity of 20% at any time; and
2) Visible emissions from the transport of hot coke in the open atmosphere exceed ten percent (10%) opacity at any time.

i. The permittee shall operate, or allow to be operated, Coke Oven Battery C in such manner that, at any time, emissions from the combustion stack serving such battery. Compliance with this requirement assures compliance with §2105.21.f : [IP 0052-I011b, Condition V.A.1.i; 2105.21.f]

1) Exceed a particulate concentration of 0.010 grains per dry standard cubic foot;
2) Equal or exceed an opacity of 20% for a period or periods aggregating in excess of three (3) minutes in any 60 minute period; or
3) Equal or exceed an opacity of 60% at any time.
4) Measurements of opacity shall be performed according to the methods for visible emissions established by §2107.11 of Article XXI.

j. The permittee shall not operate, or allow to be operated, any source in such manner that unburned coke oven gas is emitted into the open air. In addition, the permittee shall not flare, mix, or combust coke oven gas, or allow such gas to be flared, mixed or combusted unless the gas meets the requirements of Site Level Condition IV.33. [§2105.21.h; §2105.21.h.4]

k. The provisions of 40 CFR 63, Subpart L apply to Coke Battery C. [IP 0052-I011b, Condition V.A.1.k; §63.300(c)]

l. The emission limitations set forth in 40 CFR 63, Subpart L shall apply at all times except during a period of startup, shutdown, or malfunction. The startup period shall be determined by the Department and shall not exceed 180 days. [§63.300(e); IP 0052-I011b, Condition V.A.1.d]

m. Rules of general applicability promulgated under section 112 of the Act, including the General Provisions, may apply to coke ovens provided that the topic covered by such a rule is not addressed in 40 CFR 63, Subpart L. [IP 0052-I011b, Condition V.A.1.m; §63.300(f)]

n. The permittee shall not cause to be discharged or allow to be discharged to the atmosphere coke oven emissions from C Battery that exceed any of the following emission limitations. Compliance with this requirement assures compliance with §63.304(b)(4): [IP 0052-I011b, Condition V.A.1.n; §63.304(b)(4)]

1) 2.0 percent leaking coke oven doors as determined by the procedures in Condition IV.30.c.1) above;
2) 0.15 percent leaking topside port lids, as determined by the procedures in Condition IV.30.c.1) above;
3) 1.5 percent leaking offtake system(s), as determined by the procedures in Condition IV.30.c.1) above;
4) 12 seconds of visible emissions per charge, as determined by the procedures in Condition IV.30.c.2) above.

proposed

o. The permittee shall: [§63.307(a); §2103.12.h.6; IP 0052-I011b, Condition V.A.1.d]

1) Install a bypass/bleeder stack flare system that is capable of controlling 120 percent of the normal gas flow generated by Coke Oven Battery C, which shall thereafter be operated and maintained.
2) Not allow coke oven emissions to be vented to the atmosphere through bypass/bleeder stacks, except through the flare system or the alternative control device as described in V.I.1.r below.

p. Each flare installed shall meet the following requirements: [IP 0052-I011b, Condition V.A.1.p; §63.307(b)]

1) Each flare shall be designed for a net heating value of 8.9 MJ/scm (240 Btu/scf).
2) Each flare shall have either a continuously operable pilot flame or an electronic igniter that meets the requirements of Conditions V.I.1.p.3) and V.I.1.p.4) below.

3) Each electronic igniter shall meet the following requirements:
   A. Each flare shall be equipped with at least two igniter plugs with redundant igniter transformers;
   B. The ignition units shall be designed failsafe with respect to flame detection thermocouples (i.e., any flame detection thermocouples are used only to indicate the presence of a flame, are not interlocked with the ignition unit, and cannot deactivate the ignition system); and
   C. Integral battery backup shall be provided to maintain active ignition operation for a minimum of 15 minutes during a power failure.
   D. Each electronic igniter shall be operated to initiate ignition when the bleeder valve is not fully closed as indicated by an "OPEN" limit switch.

4) Each flare installed to meet the requirements of Condition V.I.1.p above that does not have an electronic igniter shall be operated with a pilot flame present at all times as determined by condition IV.30.g.2) above. [§§63.309(h)(2)]

q. Each flare installed shall be operated with no visible emissions, as determined by the methods specified in condition IV.30.g.1) above, except for periods not to exceed a total of 5 minutes during any 2 consecutive hours. [§63.307(c); §2103.12.h.6; IP 0052-I011b, Condition V.A.1.q]

r. As an alternative to the installation, operation, and maintenance of a flare system as required in Condition V.I.1.o above, the permittee may petition the Department for approval of an alternative control device or system that achieves at least 98 percent destruction or control of coke oven emissions vented to the alternative control device or system. [§63.307(d); §2103.12.h.6; IP 0052-I011b, Condition V.A.1.r]

s. At all times including periods of startup, shutdown, and malfunction, the owner or operator shall operate and maintain the coke oven battery and its pollution control equipment required under 40 CFR 63, Subpart L, in a manner consistent with good air pollution control practices for minimizing emissions to the levels required by any applicable performance standards under 40 CFR 63, Subpart L. Failure to adhere to the requirement of this paragraph shall not constitute a separate violation if a violation of an applicable performance or work practice standard has also occurred. [§63.310(a); §2103.12.h.6; IP 0052-I011b, Condition V.A.1.s]

t. Malfunctions shall be corrected as soon as practicable after their occurrence. [§63.310(c); §2103.12.h.6; IP 0052-I011b, Condition V.A.1.t]

proposed

u. Except as specified in §63.307(f), nothing in 40 CFR 63, Subpart L shall limit or affect any authority or obligation of Federal, State, or local agencies to establish emission limitations or other requirements more stringent than those specified in 40 CFR 63, Subpart L. [§63.312(d); §2103.12.h.6; IP 0052-I011b, Condition V.A.1.u]

v. The permittee shall comply with each emission limitation, work practice standard, and operation and maintenance requirement in 40 CFR Part 63, Subpart CCCCC that applies upon initial startup. [§63.7283(c); §2103.12.h.6; IP 0052-I011b, Condition V.A.1.v]

w. The permittee shall meet the notification and schedule requirements in Conditions V.I.5.m through V.I.5.p below. Several of these notifications must be submitted before the compliance date for Coke Battery C. [§63.7283(d); §2103.12.h.6; IP 0052-I011b, Condition V.A.1.w]

x. The permittee shall not discharge to the atmosphere any emissions from the C Battery stack that exhibit an opacity greater than the following applicable limits. [§63.7296; §2103.12.h.6; IP 0052-I011b, Condition V.A.1.z]

1) Daily average of 15 percent opacity for a battery on a normal coking cycle.
2) Daily average of 20 percent opacity for a battery on batterywide extended coking.

y. The permittee shall be in compliance with the emission limitations, work practice standards, and operation and maintenance requirements in 40 CFR Part 63, Subpart CCCCC at all times, except during periods of startup, shutdown, and malfunction as defined in §63.2. [§63.7310(a); §2103.12.h.6; IP 0052-I011b, Condition V.A.1.aa]

z. During the period between the compliance date specified for Coke Battery C in Condition V.I.1.v above and the date upon which continuous monitoring systems have been installed and certified and any applicable operating limits have been set, the permittee shall maintain a log detailing the operation and maintenance of the process and emissions control equipment. [§63.7310(b); §2103.12.h.6; IP 0052-I011b, Condition V.A.1.d]

aa. The permittee shall develop a written startup, shutdown, and malfunction plan according to the provisions in §63.6(e)(3). [§63.7310(c); §2103.12.h.6; IP 0052-I011b, Condition V.A.1.cc]

bb. For C Battery subject to the opacity limit for stacks in Condition V.I.1.x above, the permittee has demonstrated initial compliance if the daily average opacity, as measured according to the performance test procedures in Condition V.I.2.d below, is no more than 15 percent for a battery on a normal coking cycle or 20 percent for a battery on batterywide extended coking. [§63.7326(b); §2103.12.h.6; IP 0052-I011b, Condition V.A.1.ff]

cc. At no time shall the permittee operate the Coke Battery C unless they are properly operated and maintained according to good engineering and air pollution control practices by performing regular maintenance with the exception of actions to mitigate emergency conditions. [RACT IP 0052-I020b, Condition V.D.1.b; 25 Pa Code §129.99; §2103.12.a.2.B]

proposed

dd. Emissions from Coke Battery C combustion stack shall not exceed the limitations in Tables V-I-1 and V-I-2. [IP 0052-I011b, Condition V.A.1.hh; IP 0052-I017, Condition V.A.1.b; §2105.21.f.2; §2105.21.h.4; §2103.12.a.2.D]

TABLE V-I-1 Emission Limitations
Battery C Combustion Stack

POLLUTANT	HOURLY EMISSION LIMIT (lb/hr)	ANNUAL EMISSION LIMIT (tons/year) [1]
Particulate Matter	17.6	77.0
PM_{10}	17.2	75.4
$PM_{2.5}$	17.0	74.5
Nitrogen Oxide	139.22	609.80
Carbon Monoxide	100.22	438.98
Volatile Organic Compounds	12.31	54.0
Total Reduced Sulfur	2.0	8.80
Benzene	1.0	4.38
HCl	5.0	22.0
Napthalene	0.11	0.50

[1]A year is defined as any 12 consecutive months.

ee. SO_2 emissions from the C battery combustion stack shall not exceed the limitations in Table V-I-2 below: [§2105.21.h.4; SO_2 SIP IP 0052-I017, Condition V.B.1.c; IP 0052-I011b, Condition V.A.1.hh]

TABLE V-I-2 – SO_2 Emission Limitations for C Battery Combustion Stack

30 day rolling average limit (lb/hr)*	Supplementary 24-hr Limit* (lb/hr)	Tons/year**
32.03	40.83	140.29

*Limits are based on a rolling 30-day average of 24-hour (calendar day) averages, with an additional restriction of no more than 3 consecutive days above a supplementary 24-hour limit. These limits are based on ACHD's SO_2 State Implementation Plan (SIP) Permit Revision and USEPA SO_2 Guidance dated September 14, 2017.

**Tons/year value is used to demonstrate the expected tons/year from this unit. The value is derived by converting the 30-day rolling average limit lb/hr to an annual tons per year value. These limits are based on ACHD's SO_2 State Implementation Plan (SIP) Permit Revision and USEPA SO_2 Guidance dated September 14, 2017.

proposed

2. Testing Requirements:

a. The permittee shall comply with the provisions of the applicable performance tests and procedure requirements in Site level Condition IV.30 above. [§63.309; §2103.12.h.1]

b. The permittee shall conduct performance tests to demonstrate compliance with each opacity limit in Condition V.I.1.x.1) above for coke oven battery C stack by the compliance date that is specified in Condition V.I.1.v above. [§63.7320(b); §2103.12.h.1; IP 0052-I011b, Condition V.A.2.j]

c. The permittee shall conduct each performance test that applies to Coke Oven battery C according to the requirements in Condition V.I.2.d below. [§63.7324(a); §2103.12.h.1; IP 0052-I011b, Condition V.A.2.p]

d. To determine compliance with the daily average opacity limit for stacks of 15 percent for a by-product coke oven battery on a normal coking cycle or 20 percent for a by-product coke oven battery on batterywide extended coking, follow the test methods and procedures in the following conditions: [§63.7324(b); §2103.12.h.1; IP 0052-I011b, Condition V.A.2.q]

1) Using the continuous opacity monitoring system (COMS) required in Condition V.I.3.b below, measure and record the opacity of emissions from C Battery stack for a 24-hour period.
2) Reduce the monitoring data to hourly averages as specified in §63.8(g)(2).
3) Compute and record the 24-hour (daily) average of the COMS data.

e. The permittee shall have particulate emissions (PM_{10} and $PM_{2.5}$) stack tests performed on the C Battery combustion stack according to Site Level Condition IV.14 above and at least once every two years thereafter to demonstrate compliance with the mass emission standards in Condition V.I.1.cc above. Particulate emission tests shall be conducted according to the methodology specified in 40 CFR 60, Appendix A or a methodology approved by the Department. The permittee shall submit a stack test protocol to the Department for approval at least 45 days prior to the test dates. During each stack test performed, simultaneous visible emission evaluations shall be conducted according to the methodology specified in 40 CFR 60, Appendix A, Method 9, except for the provisions of Section 2.5 of Method 9. [§2108.02.b & e; §2103.12.h.1; IP 0052-I011b, Condition V.A.2.r]

f. Emissions of SO_2 shall be determined by converting the H_2S grain loading of the fuel burned and the fuel flow rate to pounds per hour to determine compliance with the emission limitations of Condition V.I.1.ee above. [§2105.21.f; IP 0052-I017, Condition V.A.2.b].

g. The emissions testing performed to satisfy the RATA requirements for NO_X continuous emission monitoring systems (CEMS) shall be used to satisfy the testing requirements in this Condition. [§2105.06.b.4.B; §2103.12.h.1; IP 0052-I011b, Condition V.A.2.t]

h. The permittee shall perform Relative Accuracy Test Audits (RATA) of the NO_X CEMS as specified in 25 PA Code §§139.101 - 139.111. [§2108.03; IP 0052-I011b, Condition V.A.2.u]

i. The permittee shall have CO and VOC emissions stack tests performed on the C Battery combustion stack according to Site Level Condition IV.14 above and at least once every two years thereafter to demonstrate compliance with the mass emission standards in Condition V.I.1.cc above. CO and VOC emission tests shall be conducted according to the methodology specified in 40 CFR 60, Appendix A or a methodology approved by the Department. The permittee shall submit

proposed

a stack test protocol to the Department for approval at least 45 days prior to the test dates. [§2108.02.b & e; §2103.12.h.1]

j. The Department reserves the right to require additional emissions testing sufficient to assure compliance with the terms and conditions of this permit. Such testing shall be performed in accordance with Article XXI §2108.02. [§2103.12.h.1]

3. Monitoring Requirements:

a. The permittee shall inspect the Coke Battery C collecting main for leaks at least once daily according to the procedures in Method 303 in Appendix A to 40 CFR 63, Subpart L. [§63.308(a); §2103.12.i; §2103.12.h.6; IP 0052-I011b, Condition V.A.3.b]

b. The permittee shall monitor at all times the opacity of emissions exiting the combustion stack using a COMS according to the requirements in Condition V.I.3.f below. [§63.7330(e); §2103.12.i; §2103.12.h.6; IP 0052-I011b, Condition V.A.3.e]

c. For each CPMS required in Condition V.I.3.b above, the permittee shall develop and make available for inspection upon request by the Department a site-specific monitoring plan that addresses the following requirements: [§63.7331(b); §2103.12.i; §2103.12.h.6; IP 0052-I011b, Condition V.A.3.g]

1) Installation of the CPMS sampling probe or other interface at a measurement location relative to each affected process unit such that the measurement is representative of control of the exhaust emissions (e.g., on or downstream of the last control device);
2) Performance and equipment specifications for the sample interface, the parametric signal analyzer, and the data collection and reduction system;
3) Performance evaluation procedures and acceptance criteria (e.g., calibrations);
4) Ongoing operation and maintenance procedures in accordance with the general requirements of §§63.8(c)(1), (3), (4)(ii), (7), and (8);
5) Ongoing data quality assurance procedures in accordance with the general requirements of §63.8(d); and
6) Ongoing recordkeeping and reporting procedures in accordance the general requirements of §§63.10(c), (e)(1), and (e)(2)(i).

d. The permittee shall conduct a performance evaluation of each CPMS in accordance with the site-specific monitoring plan. [§63.7331(c); §2103.12.i; §2103.12.h.6; IP 0052-I011b, Condition V.A.3.h]

e. The permittee shall operate and maintain the CPMS in continuous operation according to the site-specific monitoring plan. [§63.7331(d); §2103.12.i; §2103.12.h.6; IP 0052-I011b, Condition V.A.3.i]

f. The permittee shall install, operate, and maintain a COMS to measure and record the opacity of emissions exiting the combustion stack according to the following requirements: [§63.7331(j); §2103.12.i; §2103.12.h.6; IP 0052-I011b, Condition V.A.3.l]

1) The permittee shall install, operate, and maintain each COMS according to the requirements in §63.8(e) and Performance Specification 1 in 40 CFR 60, Appendix B. Identify periods the

proposed

COMS is out-of-control, including any periods that the COMS fails to pass a daily calibration drift assessment, quarterly performance audit, or annual zero alignment audit.

2) The permittee shall conduct a performance evaluation of each COMS according to the requirements in §63.8 and Performance Specification 1 in Appendix B to 40 CFR 60;
3) The permittee shall develop and implement a quality control program for operating and maintaining each COMS according to the requirements in §63.8(d). At minimum, the quality control program must include a daily calibration drift assessment, quarterly performance audit, and an annual zero alignment audit of each COMS;
4) Each COMS must complete a minimum of one cycle of sampling and analyzing for each successive 10-second period and one cycle of data recording for each successive 6-minute period. The permittee shall reduce the COMS data as specified in §63.8(g)(2).
5) The permittee shall determine and record the hourly and daily (24-hour) average opacity according to the procedures in Condition V.I.2.d above using all the 6-minute averages collected for periods during which the COMS is not out-of-control.

g. Except for monitor malfunctions, associated repairs, and required quality assurance or control activities (including as applicable, calibration checks and required zero and span adjustments), the permittee shall monitor continuously (or collect data at all required intervals) at all times the affected source is operating. [§63.7332(a); §2103.12.i; §2103.12.h.6; IP 0052-I011b, Condition V.A.3.m]

h. The permittee may not use data recorded during monitoring malfunctions, associated repairs, and required quality assurance or control activities in data averages and calculations used to report emission or operating levels, or in fulfilling a minimum data availability requirement, if applicable. The permittee shall use all the data collected during all other periods in assessing compliance. A monitoring malfunction is any sudden, infrequent, not reasonably preventable failure of the monitor to provide valid data. Monitoring failures that are caused in part by poor maintenance or careless operation are not malfunctions. [§63.7332(b); §2103.12.i; §2103.12.h.6; IP 0052-I011b, Condition V.A.3.n]

i. Beginning on the first day compliance is required under Conditions V.I.1.v and V.I.1.w above, the permittee shall demonstrate continuous compliance for C Battery subject to the opacity limit for stacks in Condition V.I.1.x above by meeting the following requirements: [§63.7333(e); §2103.12.i; §2103.12.h.6; IP 0052-I011b, Condition V.A.3.p]

1) Maintaining the daily average opacity at or below 15 percent for a battery on a normal coking cycle or 20 percent for a battery on battery-wide extended coking; and
2) Operating and maintaining a COMS and collecting and reducing the COMS data according to §63.7331(j).

j. The permittee shall demonstrate continuous compliance with the operation and maintenance requirements in Condition V.I.6.k below by adhering at all times to the plan requirements and recording all information needed to document conformance. [§63.7335(a); §2103.12.i; §2103.12.h.6; IP 0052-I011b, Condition V.A.3.r]

4. Record Keeping Requirements:

a. The permittee shall record the time and date a leak is first observed in Battery C collecting main, the time and date the leak is temporarily sealed, and the time and date of repair. [§63.308(b); §2103.12.j; §2103.12.h.6; IP 0052-I011b, Condition V.A.4.a]

proposed

b. The permittee shall maintain a record of internal reports which form the basis of each malfunction notification under Condition V.I.5.a below. [§63.310(f); §2103.12.j; §2103.12.h.6; IP 0052-I011b, Condition V.A.4.b]

c. The permittee shall maintain files of all required information in a permanent form suitable for inspection at an onsite location for at least 1 year and must thereafter be accessible within 3 working days to the Department for five years. Copies of the work practice plan developed under Condition IV.29 above and the startup, shutdown, and malfunction plan developed under Conditions V.I.1.s and V.I.1.t above, V.I.4.b above, V.I.5.a and V.I.5.b below, and V.I.6.e through V.I.6.g below shall be kept onsite at all times. The permittee shall maintain the following information: [§63.311(f); §2103.12.j; §2103.12.h.6; IP 0052-I011b, Condition V.A.4.c]

1) A copy of the work practice plan required by Site level Condition IV.29 above V.I.6.a any revision to the plan;
2) If the permittee is required under Condition IV.29.c above to implement the provisions of a work practice plan for a particular emission point, the following records regarding the implementation of plan requirements for that emission point during the implementation period;
   A. Copies of all written and audiovisual materials used in the training, the dates of each class, the names of the participants in each class, and documentation that all appropriate personnel have successfully completed the training required under Condition IV.29.b.1) above;
   B. The records required to be maintained by the plan provisions implementing Condition IV.29.b.7) above;
   C. Records resulting from audits of the effectiveness of the work practice program for the particular emission point, as required under Conditions IV.29.b.3)A above, IV.29.b.4)A above, and IV.29.b.5)A above; and
   D. If the plan provisions for coke oven doors must be implemented, records of the inventory of doors and jambs as required under Condition IV.29.b.3)F above; and
3) The design drawings and engineering specifications for the bypass/bleeder stack flare system or approved alternative control device or system as required under Conditions V.I.1.o through V.I.1.r above.
4) Records specified in Condition V.I.4.b above regarding the basis of each malfunction notification.

d. Records required to be maintained and reports required to be filed with the Department under 40 CFR 63, Subpart L shall be made available in accordance with the following requirements by the permittee to the authorized collective bargaining representative of the employees at a coke oven battery, for inspection and copying. [§63.311(g); §2103.12.j; §2103.12.h.6; IP 0052-I011b, Condition V.A.4.d]

1) Requests under Condition V.I.4.d shall be submitted in writing, and shall identify the records or reports that are subject to the request with reasonable specificity;
2) The owner or operator shall produce the reports for inspection and copying within a reasonable period of time, not to exceed 30 days. A reasonable fee may be charged for copying (except for the first copy of any document), which shall not exceed the copying fee charged by the Administrator under 40 CFR Part 2 regarding public information.
3) Nothing in Condition V.I.4.d shall require the production for inspection or copying of any portion of a document that contains trade secrets or confidential business information that the Administrator would be prohibited from disclosing to the public under part 2 of this chapter; and

proposed

4) The inspection or copying of a document under Condition V.I.4.d shall not in any way affect any property right of the owner or operator in such document under laws for the protection of intellectual property, including the copyright laws.

e. The permittee shall demonstrate continuous compliance with the work practice standard for soaking in Condition V.I.6.h below by maintaining records that document conformance with requirements in Conditions V.I.6.h.1) through V.I.6.h.5) below. [§63.7334(d); §2103.12.j; §2103.12.h.6; IP 0052-I011b, Condition V.A.4.e]

f. The permittee shall maintain a current copy of the operation and maintenance plans required in Conditions V.I.6.k below onsite and available for inspection upon request. The permittee shall keep the plans for the life of Battery C or until Battery C is no longer subject to the requirements of 40 CFR 63, Subpart CCCCC. [§63.7335(d); §2103.12.j; §2103.12.h.6; IP 0052-I011b, Condition V.A.4.f]

g. The permittee shall keep the records specified in the following conditions: [§63.7342(a); §2103.12.j; §2103.12.h.6; IP 0052-I011b, Condition V.A.4.g]
1) A copy of each notification and report that the permittee submitted to comply with 40 CFR 63, Subpart CCCCC, including all documentation supporting any initial notification or notification of compliance status that was submitted, according to the requirements in §63.10(b)(2)(xiv).
2) The records in §63.6(e)(3)(iii) through (v) related to startup, shutdown, and malfunction.
3) Records of performance tests, performance evaluations, and opacity observations as required in §63.10(b)(2)(viii).

h. For each COMS or CEMS, the permittee shall keep the records specified in the following requirements: [§63.7342(b); §2103.12.j; §2103.12.h.6; IP 0052-I011b, Condition V.A.4.h]

1) Records described in §63.10(b)(2)(vi) through (xi).
2) Monitoring data for COMS during a performance evaluation as required in §63.6(h)(7)(i) and (ii).
3) Previous (that is, superseded) versions of the performance evaluation plan as required in §63.8(d)(3).
4) Records of the date and time that each deviation started and stopped, and whether the deviation occurred during a period of startup, shutdown, or malfunction or during another period.

i. The permittee shall keep the records in §63.6(h)(6) for visual observations. [§63.7342(c); §2103.12.j; §2103.12.h.6; IP 0052-I011b, Condition V.A.4.i]

j. The permittee shall keep the records required by Conditions V.I.3.i above, V.I.3.j above, V.I.4.e and V.I.4.f above to show continuous compliance with each emission limitation, work practice standard, and operation and maintenance requirement. [§63.7342(d); §2103.12.j; §2103.12.h.6; IP 0052-I011b, Condition V.A.4.j]

k. The permittee shall keep records in a form suitable and readily available for expeditious review, according to §63.10(b)(1). [§63.7343(a); §2103.12.j; §2103.12.h.6; IP 0052-I011b, Condition V.A.4.k]

l. As specified in §63.10(b)(1), the permittee shall keep each record for 5 years following the date of each occurrence, measurement, maintenance, corrective action, report, or record. [§63.7343(b); §2103.12.j; §2103.12.h.6; IP 0052-I011b, Condition V.A.4.l]

proposed

m. The permittee shall keep each record on site for at least 2 years after the date of each occurrence, measurement, maintenance, corrective action, report, or record, according to §63.10(b)(1). The permittee can keep the records offsite for the remaining 3 years. [§63.7343(c); §2103.12.j; §2103.12.h.6; IP 0052-I011b, Condition V.A.4.m]

5. Reporting Requirements:

a. In order for the provisions of V.I.6.g below to apply with respect to the observation (or set of observations) for a particular day, notification of a startup, shutdown, or a malfunction shall be made by the permittee: [§63.310(d); §2103.12.k; §2103.12.h.6; IP 0052-I011b, Condition V.A.5.a]

1) If practicable, to the certified observer if the observer is at the facility during the occurrence; or
2) To the Department, in writing, within 24 hours of the occurrence first being documented by a company employee, and if the notification under Condition V.I.5.i.1) below was not made, an explanation of why no such notification was made.

b. Within 14 days of the notification made under Condition V.I.5.a above, or after a startup or shutdown, the permittee shall submit a written report to the Department that: [§63.310(e); §2103.12.k; §2103.12.h.6; IP 0052-I011b, Condition V.A.5.b]

1) Describes the time and circumstances of the startup, shutdown, or malfunction; and
2) Describes actions taken that might be considered inconsistent with the startup, shutdown, or malfunction plan.

c. Use of information provided by the certified observer shall be a sufficient basis for notifications required under § 70.5(c)(9) and the reasonable inquiry requirement of § 70.5(d). [§63.311(a); §2103.12.k; §2103.12.h.6; IP 0052-I011b, Condition V.A.5.c]

d. The permittee shall provide a written statement(s) to certify initial compliance to the Department within 45 days of the applicable compliance date for the emission limitations or requirements in 40 CFR 63, Subpart L. The permittee shall include the following information in the initial compliance certification: [§63.311(b); §2103.12.k; §2103.12.h.6; IP 0052-I011b, Condition V.A.5.d]

1) Statement signed by the permittee, certifying that a bypass/bleeder stack flare system or an approved alternative control device or system has been installed as required in Conditions V.I.1.o through V.I.1.r above; and
2) Statement, signed by the owner or operator, certifying that a written startup, shutdown, and malfunction plan has been prepared as required in Conditions V.I.1.s, V.I.1.t above, V.I.4.b above, V.I.5.a and V.I.5.b above, and below through V.I.6.g below.

e. The semiannual compliance certification for Coke Oven Battery C shall include the following information: [§63.311(d); §2103.12.k; §2103.12.h.6; IP 0052-I011b, Condition V.A.5.e]

1) Certification, signed by the permittee, that no coke oven gas was vented, except through the bypass/bleeder stack flare system of a by-product coke oven battery during the reporting period or that a venting report has been submitted according to the requirements in Condition V.I.5.f below.
2) Certification, signed by the permittee, that a startup, shutdown, or malfunction event did not occur for a coke oven battery during the reporting period or that a startup, shutdown, and

proposed

malfunction event did occur and a report was submitted according to the requirements in Condition V.I.5.b above.

3) Certification, signed by the permittee, that work practices were implemented if applicable under Condition IV.29 above.

f. The permittee shall report any venting of coke oven gas through a bypass/bleeder stack that was not vented through the bypass/bleeder stack flare system to the Department as soon as practicable but no later than 24 hours after the beginning of the event. A written report shall be submitted within 30 days of the event and shall include a description of the event and, if applicable, a copy of the notification for a hazardous substance release required pursuant 40 CFR Part 302.6. [§63.311(e); §2103.12.k; §2103.12.h.6; IP 0052-I011b, Condition V.A.5.f]

g. The permittee shall submit a notification of compliance status containing the results of the COMS performance test for battery stacks according to Condition V.I.5.p.1) below. For each particulate matter emission limitation that applies, the permittee shall submit a notification of compliance status containing the results of the performance test according to Condition V.I.5.p.2) below. [§63.7326(d); §2103.12.k; §2103.12.h.6; IP 0052-I011b, Condition V.A.5.g]

h. The permittee has demonstrated initial compliance if the permittee certifies in the notification of compliance status that each of the work practice requirements will be met beginning no later than the compliance date that is specified in V.I.1.v and V.I.1.w above. [§63.7327(a); §2103.12.k; §2103.12.h.6; IP 0052-I011b, Condition V.A.5.h]

i. Initial compliance has been demonstrated if the permittee has met the following requirements: [§63.7327(d); §2103.12.k; §2103.12.h.6; IP 0052-I011b, Condition V.A.5.i]

1) A written work practice plan for soaking has been prepared and submitted in accordance with Condition 0 below; and
2) The permittee certifies in the notification of compliance status that each of the soaking work practice requirements will be met beginning no later than the compliance date specified in Conditions V.I.1.v and V.I.1.w above.

j. Initial compliance has been demonstrated if the permittee certifies in the notification of compliance status that the following requirements have been met: [§63.7328; §2103.12.k; §2103.12.h.6; IP 0052-I011b, Condition V.A.5.j]

1) The permittee has prepared the operation and maintenance plans according to the requirements in Conditions V.I.6.k below; [§63.7328(a)]
2) The permittee has operated coke oven at C Battery and each capture system and control device applied to pushing emissions from a coke oven battery according to the procedures in the plans beginning no later than the compliance date that is specified in Conditions V.I.1.v and V.I.1.w above; [§63.7328(b)]
3) The permittee has prepared a site-specific monitoring plan according to the requirements in §63.7331(b); and [§63.7328(c)]
4) The permittee has submitted a notification of compliance status according to the requirements in Condition V.I.5.p below. [§63.7328(d)]

k. *Deviations.* The permittee shall report each instance in which each emission limitation in 40 CFR Part 60, Subpart CCCCC that applies was not met. This includes periods of startup, shutdown, and malfunction. The permittee shall also report each instance in which each work practice standard or

proposed

operation and maintenance requirement in 40 CFR 63, Subpart CCCCC that applies was not met. These instances are deviations from the emission limitations (including operating limits), work practice standards, and operation and maintenance requirements in 40 CFR 63, Subpart CCCCC. These deviations must be reported according to the requirements in Conditions V.I.5.q through V.I.5.s below. [§63.7336(a); §2103.12.k; §2103.12.h.6; IP 0052-I011b, Condition V.A.5.k]

l. *Startup, shutdowns, and malfunctions.* Consistent with §§63.6(e) and 63.7(e)(1), deviations that occur during a period of startup, shutdown, or malfunction are not violations if the permittee demonstrates to the Department's and the Administrator's satisfaction that the permittee was operating in accordance with §63.6(e)(1). In no case shall the reporting of a malfunction that is considered a breakdown prevent prosecution for any violation of this permit or Article XXI. [§ [§63.7336(b); §2108.01.c.6; §2103.12.k; §2103.12.h.6; IP 0052-I011b, Condition V.A.5.l]

m. The permittee shall submit all of the notifications in §§63.6(h)(4) and (5), 63.7(b) and (c), 63.8(e) and (f)(4), and 63.9(b) through (h) that apply by the specified dates. [§63.7340(a); §2103.12.k; §2103.12.h.6; IP 0052-I011b, Condition V.A.5.m]

n. As specified in §63.9(b)(3), , the permittee shall submit the initial notification no later than 120 calendar days after becoming subject to 40 CFR 63, Subpart CCCCC. [§63.7340(c); §2103.12.k; §2103.12.h.6; IP 0052-I011b, Condition V.A.5.n]

o. The permittee shall submit a notification of intent to conduct a performance test at least 60 calendar days before the performance test is scheduled to begin as required in §63.7(b)(1). [§63.7340(d); §2103.12.k; §2103.12.h.6; IP 0052-I011b, Condition V.A.5.o]

p. The permittee shall submit a notification of compliance status according to §63.9(h)(2)(ii) if a performance test, opacity observation, or other initial compliance demonstration is required to be conducted,. [§63.7340(e); §2103.12.k; §2103.12.h.6; IP 0052-I011b, Condition V.A.5.p]

1) For each initial compliance demonstration that does not include a performance test, the permittee shall submit the notification of compliance status before the close of business on the 30th calendar day following the completion of the initial compliance demonstration.
2) For each initial compliance demonstration that does include a performance test, the permittee shall submit the notification of compliance status, including the performance test results, before the close of business on the 60th calendar day following completion of the performance test according to §63.10(d)(2).

q. *Compliance report due dates.* Unless the Administrator and the Department have approved a different schedule, the permittee shall submit quarterly compliance reports for battery stacks and semiannual compliance reports for all other affected sources to the Department according to the following requirements: [§63.7341(a); §2103.12.k; §2103.12.h.6; IP 0052-I011b, Condition V.A.5.q]

1) The first quarterly compliance report for battery stacks must cover the period beginning on the compliance date that is specified in Conditions V.I.1.v and V.I.1.w above and ending on the last date of the third calendar month. Each subsequent compliance report must cover the next calendar quarter.
2) The first semiannual compliance report must cover the period beginning on the compliance date that is specified in Conditions V.I.1.v and V.I.1.w above and ending on June 30 or December 31, whichever date comes first after the compliance date that is specified. Each

proposed

subsequent compliance report must cover the semiannual reporting period from January 1 through June 30 or the semiannual reporting period from July 1 through December 31.

3) All quarterly compliance reports for battery stacks must be postmarked or delivered no later than one calendar month following the end of the quarterly reporting period. All semiannual compliance reports must be postmarked or delivered no later than July 31 or January 31, whichever date is the first date following the end of the semiannual reporting period.

r. *Quarterly compliance report contents.* Each quarterly report must provide information on compliance with the emission limitations for battery stacks in Condition V.I.1.x above. [§63.7341(b); §2103.12.k; §2103.12.h.6; IP 0052-I011b, Condition V.A.5.r]

s. *Immediate startup, shutdown, and malfunction report.* If the permittee had a startup, shutdown, or malfunction during the semiannual reporting period that was not consistent with the startup, shutdown, and malfunction plan, the permittee shall submit an immediate startup, shutdown, and malfunction report according to the requirements in §63.10(d)(5)(ii). [§63.7341(d); §2103.12.k; §2103.12.h.6; IP 0052-I011b, Condition V.A.5.t]

t. Reporting instances of non-compliance, does not relieve the permittee of the requirement to report breakdowns in accordance with Site Level Condition IV.9, if appropriate. [§2102.04.b.4]

6. Work Practice Standard:

a. The permittee shall comply with the provisions of the applicable workpractice requirements in Site level Condition IV.29 above. [§2103.12.h.6.; §63.306(a); IP 0052-I011b, Condition V.A.

b. The permittee shall temporarily seal any leak in the collecting main as soon as possible after detection, but no later than 4 hours after detection of the leak. [§63.308(c); §2103.12.h.6; IP 0052-I011b, Condition V.A.6.e]

c. The permittee shall initiate a collecting main repair as expeditiously as possible but no later than 5 calendar days after initial detection of the leak. The repair shall be completed within 15 calendar days after initial detection of the leak unless an alternative schedule is approved by the Department. [§63.308(d); §2103.12.h.6; IP 0052-I01b1, Condition V.A.6.f]

d. The permitte shall develop, according to Condition V.I.1.t above, a written startup, shutdown, and malfunction plan for Coke Battery C that describes procedures for operating the battery, including associated air pollution control equipment, during a period of a startup, shutdown, or malfunction in a manner consistent with good air pollution control practices for minimizing emissions, and procedures for correcting malfunctioning process and air pollution control equipment as quickly as practicable. [§63.310(b); §2103.12.h.6; IP 0052-I011b, Condition V.A.6.g]

e. To satisfy the requirements §63.310 to develop a startup, shutdown, and malfunction plan, the permittee may use the standard operating procedures manual for the battery, provided the manual meets all the requirements for this section and is made available for inspection at reasonable times when requested by the Department. [§63.310(g); §2103.12.h.6; IP 0052-I011b, Condition V.A.6.h]

f. The Department or the Administrator may require reasonable revisions to a startup, shutdown, and malfunction plan, if the Department or Administrator find that the plan: [§63.310(h); §2103.12.h.6; IP 0052-I011b, Condition V.A.6.i]

proposed

1) Does not address a startup, shutdown, or malfunction event that has occurred;
2) Fails to provide for the operation of the source (including associated air pollution control equipment) during a startup, shutdown, or malfunction event in a manner consistent with good air pollution control practices for minimizing emissions; or
3) Does not provide adequate procedures for correcting malfunctioning process and/or air pollution control equipment as quickly as practicable.

g. If the permittee demonstrates to the satisfaction of the Department and the Administrator that a startup, shutdown, or malfunction has occurred, then an observation occurring during such startup, shutdown, or malfunction shall not: [§63.310(i); §2103.12.h.6; IP 0052-I011b, Condition V.A.6.j]

1) Constitute a violation of relevant requirements of 40 CFR Part 63 Subpart L;
2) Be used in any compliance determination under Conditions IV.30 above; or
3) Be considered for purposes of Site level Condition IV.29 above, until the Department has resolved the claim that a startup, shutdown, or malfunction has occurred. If the Department or the Administrator determines that a startup, shutdown, or malfunction has not occurred, such observations may be used for purposes of Site level Condition IV.29, regardless of whether the owner or operator further contests such determination. The owner's or operator's receipt of written notification from the Department and the Administrator that a startup, shutdown, or malfunction has not occurred will serve, where applicable under Condition Site level Condition IV.29 above, as written notification from the certified observer that an exceedance has occurred.

h. The permittee shall prepare and operate at all times according to a written work practice plan for soaking. Each plan must include measures and procedures to: [§63.7294(a); §2103.12.h.6; IP 0052-I011b, Condition V.A.6.m]

1) Train topside workers to identify soaking emissions that require corrective actions.
2) Damper the oven off the collecting main prior to opening the standpipe cap.
3) Determine the cause of soaking emissions that do not ignite automatically, including emissions that result from raw coke oven gas leaking from the collecting main through the damper, and emissions that result from incomplete coking.
4) If soaking emissions are caused by leaks from the collecting main, take corrective actions to eliminate the soaking emissions. Corrective actions may include, but are not limited to, reseating the damper, cleaning the flushing liquor piping, using aspiration, putting the oven back on the collecting main, or igniting the emissions.
5) If soaking emissions are not caused by leaks from the collecting main, notify a designated responsible party. The responsible party must determine whether the soaking emissions are due to incomplete coking. If incomplete coking is the cause of the soaking emissions, the permittee shall put the oven back on the collecting main until it is completely coked or the permittee shall ignite the emissions.

i. As provided in §63.6(g), the permittee may request to use an alternative to the work practice standard in Condition V.I.6.h above. [§63.7294(b); §2103.12.h.6; IP 0052-I011b, Condition V.A.6.n]

j. As required by §63.6(e)(1)(i), the permittee shall always operate and maintain Coke Oven Battery C, including air pollution control and monitoring equipment, in a manner consistent with good air pollution control practices for minimizing emissions at least to the levels required by 40 CFR 63,

proposed

Subpart CCCCC and the requirements in this installation permit. [§63.7300(a); §2103.12.h.6; IP 0052-I011b, Condition V.A.6.o]

k. The permittee shall prepare and operate at all times according to a written operation and maintenance plan for the general operation and maintenance of Coke Oven Battery C. Each plan must address, at a minimum, the following elements: [§63.7300(b); §2103.12.h.6; IP 0052-I011b, Condition V.A.6.p]

1) Frequency and method of recording underfiring gas parameters.
2) By use of the PROven® system, establish a range of acceptable operating pressures for the collector main and individual ovens to insure that charging emissions and door, lid and offtake leaks are minimized.
3) Procedures to insure that the PROven® system maintains the collector main at a negative pressure and that each individual C Battery oven is maintained at the minimum positive pressure necessary to prevent air ingress into the oven and door, lid and offtake leaks.
4) Frequency and method of recording collector main and oven internal pressure.
5) Frequency and procedures for inspecting PROven® system components.
6) Frequency and method of recording battery operating temperature, including measurement of individual flue and cross-wall temperatures.
7) Procedures to prevent pushing an oven before it is fully coked.
8) Procedures to prevent overcharging and undercharging of ovens, including measurement of coal moisture, coal bulk density, and procedures for determining volume of coal charged.
9) Frequency and procedures for inspecting flues, burners, and nozzles.
10) Schedule and procedures for the daily washing of baffles.

l. During the C Battery coke production ramp-up stage, the PROven® System, Pushing Emission Control (PEC) Systems, stage charging of coal to the ovens and other control measures to limit pollutant emissions shall be installed and operating according to good air pollution control practices. [§2103.12.h.6; IP 0052-I011b, Condition VI.26.d]

m. At no time shall the permittee operate Coke Oven Battery C unless it is properly operated and maintained according to good engineering and air pollution control practices by performing regular maintenance with the exception of actions to mitigate emergency conditions. [RACT IP 0052-I020b, V.D.1.b; RACT Order No. 234, Condition 1.1; 25 Pa Code §129.99; §2103.12.a.2.B]

n. The permittee shall not operate Coke Oven Battery C unless the PROven® System is maintained and operated in such manner that the collector main is maintained at a negative pressure and each individual oven is maintained at the lowest positive pressure necessary to inhibit leaks of raw coke oven gas to the atmosphere from oven doors, charging port lids, and offtakes. [RACT IP 0052-I020b, V.D.1.d; RACT Order No. 234, Condition 1.1; 25 Pa Code §129.99; §2103.12.a.2.B]

7. Additional Requirements

a. The permittee shall comply with each applicable requirement of the NESHAP General Provisions (40 CFR part 63, subpart A) as shown in Table 1 in 40 CFR 63, Subpart CCCCC. [§63.7350]

proposed

J. Coke Oven Battery C Pushing Emissions Control (PEC) Baghouse:

Process Description:	Coke Battery C
Facility ID:	P046
Max. Design Rate/Units:	1,107,384 tons of coke/year
Capacity:	1,107,384 tons of coke/year
Raw Materials:	NA
Control Device(s):	PROven® system, Pushing Emission Control Baghouse

1. Restrictions:

a. The permittee shall not operate, or allow to be operated, Coke Oven Battery C unless there is installed on such battery a pushing emission control device which is designed to reduce fugitive emissions from pushing to the minimum attainable through the use of BACT, nor shall any person operate, or allow to be operated any battery of coke ovens in such manner that: [IP 0052-I011b, Condition V.A.1.h; 2105.21.e]

1) Fugitive pushing emissions or emissions from the pushing emission control device outlet equal or exceed an opacity of 20% at any time; and
2) Visible emissions from the transport of hot coke in the open atmosphere exceed ten percent (10%) opacity at any time.

b. The permittee shall not discharge to the atmosphere emissions of particulate matter from a control device applied to pushing emissions that exceed 0.02 pound per ton (lb/ton) of coke as determined by the procedures provided in Conditions V.J.2.c below. [§63.7290(a); §63.7322; §2103.12.h.6; IP 0052-I011b, Condition V.A.1.x]

c. The permittee shall [§63.7290(b)(3); §2103.12.h.6; IP 0052-I011b, Condition V.A.1.y]:

1) Maintain the daily average volumetric flow rate at the inlet of the PEC baghouse at or above the minimum level established during the initial performance test; or: [§63.7290(b)(3)]

2) Maintain the daily average fan motor amperes of the PEC system electric motor at or above the minimum level established during the initial performance test. [§63.7290(b)(3)(i)]

d. The permittee shall be in compliance with the emission limitations, work practice standards, and operation and maintenance requirements in 40 CFR Part 63, Subpart CCCCC at all times, except during periods of startup, shutdown, and malfunction as defined in §63.2. [§63.7310(a); §2103.12.h.6; IP 0052-I011b, Condition V.A.1.aa]

e. The permittee shall develop a written startup, shutdown, and malfunction plan according to the provisions in §63.6(e)(3). [§63.7310(c); §2103.12.h.6; IP 0052-I011b, Condition V.A.1.cc]

f. For each control device applied to pushing emissions and subject to the emission limit in Condition V.J.1.b above, the permittee shall demonstrate continuous compliance by meeting the following requirements: [§63.7333(a); §2103.12.h.6; IP 0052-I011b, Condition V.A.1.gg]

1) Maintaining emissions of particulate matter at or below the applicable limits in Condition V.J.1.b above; and
2) Conducting subsequent performance tests to demonstrate continuous compliance no less

proposed

frequently than twice during each term of the title V operating permit (at mid-term and renewal).

g. Emissions from Battery C PEC baghouse shall not exceed the limitations in Table V-J -1: [IP 0052-I011b, Condition V.A.1.hh; SO_2 SIP IP 0052-I017, Condition V.B.1.c; §2105.21.f.2; §2105.21.h.4; §2103.12.a.2.D]

TABLE V-J-1 - Emission Limitations for Battery C PEC System Baghouse

POLLUTANT	HOURLY EMISSION LIMIT (lb/hr)	ANNUAL EMISSION LIMIT (tons/year) [1]
Particulate Matter	7.7	33.5
PM_{10}	3.4	14.9
$PM_{2.5}$	1.4	6.1
Nitrogen Oxides	3.6	15.9
Sulfur Oxides*	8.65	37.89
Carbon Monoxide	8.7	38.2
Volatile Organic Compounds	0.3	1.2
Total Reduced Sulfur	0.3	1.3
Benzene	0.04	0.19
Cyanide Compounds	0.09	0.39

[1]A year is defined as any 12 consecutive months.
*SO_2 SIP IP 0052-I017, Condition V.B.1.c

h. SO_2 emissions from the batteries hot car shall not exceed the limitations in Table V-J-2 below: [§2105.21.h.4; SO_2 SIP IP 0052-I017, Condition V.B.1.c]

TABLE V-J-2 – SO_2 Emission Limitations for C Battery Hot Car

POLLUTANT**	HOURLY EMISSION LIMIT (lb/hr)	ANNUAL EMISSION LIMIT (tons/year)*
SO_2	5.82	25.49

*A year is defined as any consecutive 12-month period
**These limits are based on ACHD's SO_2 State Implementation Plan (SIP) Permit Revision and USEPA SO_2 Guidance dated September 14, 2017.

proposed

2. Testing Requirements:

a. The permittee shall conduct a performance test to demonstrate compliance with each limit in Condition V.J.1.b above for emissions of particulate matter from a control device applied to pushing emissions that applies within 180 calendar days after the compliance date that is specified in Condition V.I.1.v above. [§63.7320(a); §2103.12.h.1; IP 0052-I011b, Condition V.A.2.i]

b. For each control device subject to an emission limit for particulate matter in Condition V.J.1.b above, the permittee shall conduct subsequent performance tests no less frequently than once every two years. [§2108.02.a; §63.7321; §2103.12.h.1; IP 0052-I011b, Condition V.A.2.k]

c. To determine compliance with a process-weighted mass rate of particulate matter (lb/ton of coke) from a control device applied to pushing emissions, follow the test methods and procedures below: [§63.7322(b); §2103.12.h.1; IP 0052-I011b, Condition V.A.2.m]

1) Determine the concentration of particulate matter according to the following test methods in Appendix A to 40 CFR Part 60.
   A. Method 1 to select sampling port locations and the number of traverse points. Sampling sites must be located at the outlet of the control device and prior to any releases to the atmosphere.
   B. Method 2, 2F, or 2G to determine the volumetric flow rate of the stack gas.
   C. Method 3, 3A, or 3B to determine the dry molecular weight of the stack gas.
   D. Method 4 to determine the moisture content of the stack gas.
   E. Method 5 or 5D, as applicable, to determine the concentration of front half particulate matter in the stack gas.

2) During each particulate matter test run, sample only during periods of actual pushing when the capture system fan and control device are engaged. Collect a minimum sample volume of 30 dry standard cubic feet of gas during each test run. Three valid test runs are needed to comprise a performance test. Each run must start at the beginning of a push and finish at the end of a push (*i.e.*, sample for an integral number of pushes).

3) Determine the total combined weight in tons of coke pushed during the duration of each test run according to the procedures inthe source test plan for calculating coke yield from the quantity of coal charged to an individual oven.

4) Compute the process-weighted mass emissions (E_p) for each test run using the following equation:

$$E_p = \frac{C \times Q \times T}{P \times K}$$

Where:
E_p= Process weighted mass emissions of particulate matter, lb/ton;
C = Concentration of particulate matter, gr/dscf;
Q = Volumetric flow rate of stack gas, dscf/hr;
T = Total time during a run that a sample is withdrawn from the stack during pushing, hr;
P = Total amount of coke pushed during the test run, tons; and
K = Conversion factor, 7,000 gr/lb

proposed

d. For a capture system applied to pushing emissions from Coke Oven Battery C, the permittee shall establish a site-specific operating limit according to one of the following procedures: [§63.7323(c); §2103.12.h.1; IP 0052-I011b, Condition V.A.2.n]

1) If the operating limit in Condition V.J.1.c.1) above for volumetric flow rate is elected, measure and record the total volumetric flow rate at the inlet of the control device during each push sampled for each particulate matter test run. The operating limit is the lowest volumetric flow rate recorded during any of the three runs that meet the emission limit.
2) If the operating limit in Condition V.J.1.c.2) above for fan motor amperes is elected, measure and record the fan motor amperes during each push sampled for each particulate matter test run. The operating limit is the lowest fan motor amperes recorded during any of the three runs that meet the emission limit.

e. The permittee may change the operating limit for a capture system or mobile control device that captures emissions during pushing if the following requirements are met: [§63.7323(e); §2103.12.h.1; IP 0052-I011b, Condition V.A.2.o]

1) Submit a written notification to the Department of the request to conduct a new performance test to revise the operating limit.
2) Conduct a performance test to demonstrate that emissions of particulate matter from the control device do not exceed the applicable limit in §63.7290(a).
3) Establish revised operating limits according to the applicable procedures in Condition V.J.2.d above.

f. The Department reserves the right to require additional emissions testing sufficient to assure compliance with the terms and conditions of this permit. Such testing shall be performed in accordance with Article XXI §2108.02. [§2103.12.h.1]

3. Monitoring Requirements:

a. The permittee shall meet each of the following requirements: [§63.7291(a); §2103.12.h.6; IP 0052-I011b, Condition V.A.6.k]

1) Observe and record the opacity of fugitive pushing emissions from each oven at least once every 90 days. If an oven cannot be observed during a 90-day period due to circumstances that were not reasonably avoidable, the permittee shall observe the opacity of the first push of that oven following the close of the 90-day period that is capable of being observed in accordance with the procedures in Condition V.J.3.m below, and the permittee shall document why the oven was not observed within a 90-day period. All opacity observations of fugitive pushing emissions for batteries with vertical flues must be made using the procedures in Condition V.J.3.m below. [§63.7291(a)(1)]
2) If two or more batteries are served by the same pushing equipment and total no more than 90 ovens, the batteries as a unit can be considered a single battery. [§63.7291(a)(2)]
3) Observe and record the opacity of fugitive pushing emissions for at least four consecutive pushes per battery each day. Exclude any push during which the observer's view is obstructed or obscured by interferences and observe the next available push to complete the set of four pushes. If necessary due to circumstances that were not reasonably avoidable, the permittee may observe fewer than four consecutive pushes in a day; however, the permittee shall observe and record as many consecutive pushes as possible and document why four consecutive pushes

proposed

could not be observed. The permittee may observe and record one or more non-consecutive pushes in addition to any consecutive pushes observed in a day. [§63.7291(a)(3)]

4) Do not alter the pushing schedule to change the sequence of consecutive pushes to be observed on any day. Keep records indicating the legitimate operational reason for any change in the pushing schedule which results in a change in the sequence of consecutive pushes observed on any day. [§63.7291(a)(4)]

5) If the average opacity for any individual push exceeds 35 percent opacity, the permittee shall take corrective action and/or increase coking time for that oven. The permittee shall complete corrective action or increase coking time within either 10 calendar days or the number of days determined using Equation 1 below, whichever is greater:

$$X = 0.55 \times Y$$

Where:

X = Number of calendar days allowed to complete corrective action or increase coking time; and

Y = Current coking time for the oven, hours.

For the purpose of determining the number of calendar days allowed under this equation, day one is the first day following the day the permittee observed an opacity in excess of 35 percent for any tall battery. Any fraction produced by this equation must be counted as a whole day. Days during which the oven is removed from service are not included in the number of days allowed to complete corrective action. [§63.7291(a)(5)]

6) The permittee shall demonstrate that [§63.7291(a)(6)]:

A. The corrective action and/or increased coking time was successful. After a period of time no longer than the number of days allowed in Condition V.J.3.a.5) above, observe and record the opacity of the first two pushes for the oven capable of being observed using the procedures in Condition V.J.3.m below. The corrective action and/or increased coking time was successful if the average opacity for each of the two pushes is 35 percent or less for a tall battery. If the corrective action and/or increased coking time was successful, the permittee may return the oven to the 90-day reading rotation described in Condition V.J.3.a.1) above. If the average opacity of either push exceeds 35 percent for a tall battery, the corrective action and/or increased coking time was unsuccessful, and the permittee shall complete additional corrective action and/or increase coking time for that oven within the number of days allowed in ConditionV.J.3.a.5) above. [§63.7291(a)(6)(i)]

B. After implementing any additional corrective action and/or increased coking time required in ConditionsV.J.3.a.6)A above or V.J.3.a.7)B below, the permittee shall demonstrate that corrective action and/or increased coking time was successful. After a period of time no longer than the number of days allowed in Condition V.J.3.a.5) above, the permittee shall observe and record the opacity of the first two pushes for the oven capable of being observed using the procedures in Condition V.J.3.m below. The corrective action and/or increased coking time was successful if the average opacity for each of the two pushes is 35 percent or less for a tall battery. If the corrective action and/or increased coking time

proposed

was successful, the permittee may return the oven to the 90-day reading rotation described in Condition V.J.3.a.1) above. If the average opacity of either push exceeds 35 percent for a tall battery, the corrective action and/or increased coking time was unsuccessful, and the permittee shall follow the procedures in Condition V.J.3.a.6)C below. [§63.7291(a)(6)(ii)]

C. If the corrective action and/or increased coking time was unsuccessful as described in Condition V.J.3.a.6)B above the permittee shall repeat the procedures in Condition V.J.3.a.6)B above until the corrective action and/or increased coking time is successful. The permittee shall report to the Department as a deviation each unsuccessful attempt at corrective action and/or increased coking time in Condition V.J.3.a.6)B above. [§63.7291(a)(6)(iii)]

7) If at any time the permittee places an oven on increased coking time as a result of fugitive pushing emissions that exceed 35 percent for a tall battery, the permittee shall keep the oven on the increased coking time until the oven qualifies for decreased coking time using the procedures in Conditions V.J.3.a.7)A below or V.J.3.a.7)B below. [§63.7291(a)(7)]:

A. To qualify for a decreased coking time for an oven placed on increased coking time in accordance with Conditions V.J.3.a.5) above or V.J.3.a.6) above, the permittee shall operate the oven on the decreased coking time. After no more than two coking cycles on the decreased coking time, the permittee shall observe and record the opacity of the first two pushes that are capable of being observed using the procedures in Condition V.J.3.m. If the average opacity for each of the two pushes is 35 percent or less for a tall battery, the permittee may keep the oven on the decreased coking time and return the oven to the 90-day reading rotation described in Condition V.J.3.a.1) above. If the average opacity of either push exceeds 35 percent for a tall battery, the attempt to qualify for a decreased coking time was unsuccessful. The permittee shall then return the oven to the previously established increased coking time, or implement other corrective action(s) and/or increased coking time. If the permittee implements other corrective action and/or a coking time that is shorter than the previously established increased coking time, the permittee shall follow the procedures in Condition V.J.3.a.6)B above to confirm that the corrective action(s) and/or increased coking time was successful. [§63.7291(a)(7)(i)]

B. If the attempt to qualify for decreased coking time was unsuccessful as described in Condition V.J.3.a.7)B, the permittee may again attempt to qualify for decreased coking time for the oven. To do this, the permittee shall operate the oven on the decreased coking time. After no more than two coking cycles on the decreased coking time, the permittee shall observe and record the opacity of the first two pushes that are capable of being observed using the procedures in condition V.J.3.m below. If the average opacity for each of the two pushes is 35 percent or less, the permittee may keep the oven on the decreased coking time and return the oven to the 90-day reading rotation described in Condition V.J.3.a.1) above above. If the average opacity of either push exceeds 35 percent, the attempt to qualify for a decreased coking time was unsuccessful. The permittee shall then return the oven to the previously established increased coking time, or implement other corrective action(s) and/or increased coking time. If the permittee implements other corrective action and/or a coking time that is shorter than the previously established increased coking time, the permittee shall follow the procedures in Condition V.J.3.a.6)B above to confirm that the corrective action(s) and/or increased coking time was successful. [§63.7291(a)(7)(ii)]

proposed

C. The permittee shall report to the Department as a deviation the second and any subsequent consecutive unsuccessful attempts on the same oven to qualify for decreased coking time as described in Condition V.J.3.a.7)B above. [§63.7291(a)(7)(iii)].

b. For the PEC system baghouse applied to pushing emissions from C Battery, the permittee shall at all times monitor the relative change in particulate matter loadings using a bag leak detection system according to the requirements in Condition V.J.3.d below and conduct inspections at their specified frequency according to the following requirements: [§63.7330(a); §2103.12.i; §2103.12.h.6; IP 0052-I011b, Condition V.A.3.c]

1) Monitor the pressure drop across each baghouse cell each day to ensure pressure drop is within the normal operating range identified in the manual;
2) Confirm that dust is being removed from hoppers through weekly visual inspections or equivalent means of ensuring the proper functioning of removal mechanisms;
3) Check the compressed air supply for pulse-jet baghouses each day;
4) Monitor cleaning cycles to ensure proper operation using an appropriate methodology;
5) Check bag cleaning mechanisms for proper functioning through monthly visual inspection or equivalent means;
6) Make monthly visual checks of bag tension on reverse air and shaker-type baghouses to ensure that bags are not kinked (kneed or bent) or laying on their sides. The permittee does not have to make this check for shaker-type baghouses using self-tensioning (spring-loaded) devices;
7) Confirm the physical integrity of the baghouse through quarterly visual inspections of the baghouse interior for air leaks; and
8) Inspect fans for wear, material buildup, and corrosion through quarterly visual inspections, vibration detectors, or equivalent means.

c. For the PEC baghouse system applied to pushing emissions, the permittee shall at all times monitor the volumetric flow rate according to the requirements in Condition V.J.3.f below, or the fan motor amperes according to the requirements in Condition V.J.3.g below. [§63.7330(d); §2103.12.i; §2103.12.h.6; IP 0052-I011b, Condition V.A.3.d]

d. For each baghouse applied to pushing emissions, the permittee shall install, operate, and maintain each bag leak detection system according to the following requirements: [§63.7331(a); §2103.12.i; §2103.12.h.6; IP 0052-I011b, Condition V.A.3.f]

1) The system must be certified by the manufacturer to be capable of detecting emissions of particulate matter at concentrations of 10 milligrams per actual cubic meter (0.0044 grains per actual cubic foot) or less;
2) The system must provide output of relative changes in particulate matter loadings;
3) The system must be equipped with an alarm that will sound when an increase in relative particulate loadings is detected over a preset level. The alarm must be located such that it can be heard by the appropriate plant personnel;
4) Each system that works based on the triboelectric effect must be installed, operated, and maintained in a manner consistent with the guidance document, "Fabric Filter Bag Leak Detection Guidance" (EPA–454/R–98–015, September 1997). The permittee may install, operate, and maintain other types of bag leak detection systems in a manner consistent with the manufacturer's written specifications and recommendations;
5) To make the initial adjustment of the system, establish the baseline output by adjusting the sensitivity (range) and the averaging period of the device. Then, establish the alarm set points and the alarm delay time;

proposed

6) Following the initial adjustment, do not adjust the sensitivity or range, averaging period, alarm set points, or alarm delay time, except as detailed in the operation and maintenance plan. Do not increase the sensitivity by more than 100 percent or decrease the sensitivity by more than 50 percent over a 365-day period unless a responsible official certifies, in writing, that the baghouse has been inspected and found to be in good operating condition; and
7) Where multiple detectors are required, the system's instrumentation and alarm may be shared among detectors.

e. For each CPMS required in Conditions V.J.3.a aboveand V.J.3.c above, the permittee shall develop and make available for inspection upon request by the Department a site-specific monitoring plan that addresses the following requirements: [§63.7331(b); §2103.12.i; §2103.12.h.6; IP 0052-I011b, Condition V.A.3.g]

1) Installation of the CPMS sampling probe or other interface at a measurement location relative to each affected process unit such that the measurement is representative of control of the exhaust emissions (e.g., on or downstream of the last control device);
2) Performance and equipment specifications for the sample interface, the parametric signal analyzer, and the data collection and reduction system;
3) Performance evaluation procedures and acceptance criteria (e.g., calibrations);
4) Ongoing operation and maintenance procedures in accordance with the general requirements of §§63.8(c)(1), (3), (4)(ii), (7), and (8);
5) Ongoing data quality assurance procedures in accordance with the general requirements of §63.8(d); and
6) Ongoing recordkeeping and reporting procedures in accordance the general requirements of §§63.10(c), (e)(1), and (e)(2)(i).

f. The permittee shall conduct a performance evaluation of each CPMS in accordance with the site-specific monitoring plan. [§63.7331(c); §2103.12.i; §2103.12.h.6; IP 0052-I011b, Condition V.A.3.h]

g. The permittee shall operate and maintain the CPMS in continuous operation according to the site-specific monitoring plan. [§63.7331(d); §2103.12.i; §2103.12.h.6; IP 0052-I011b, Condition V.A.3.i]

h. If the permittee elects the operating limit in Condition V.J.1.c.1) above for a capture system applied to pushing emissions, the permittee shall install, operate, and maintain a device to measure the total volumetric flow rate at the inlet of the control device. [§63.7331(g); §2103.12.i; §2103.12.h.6; IP 0052-I011b, Condition V.A.3.i]

i. If the permittee elects the operating limit in Condition V.J.1.c.2) above for a capture system applied to pushing emissions, the permittee shall install, operate, and maintain a device to measure the fan motor amperes. [§63.7331(h); §2103.12.i; §2103.12.h.6; IP 0052-I011b, Condition V.A.3.k]

j. Except for monitor malfunctions, associated repairs, and required quality assurance or control activities (including as applicable, calibration checks and required zero and span adjustments), the permittee shall monitor continuously (or collect data at all required intervals) at all times the affected source is operating. [§63.7332(a); §2103.12.i; §2103.12.h.6; IP 0052-I011b, Condition V.A.3.m]

proposed

k. The permittee may not use data recorded during monitoring malfunctions, associated repairs, and required quality assurance or control activities in data averages and calculations used to report emission or operating levels, or in fulfilling a minimum data availability requirement, if applicable. The permittee shall use all the data collected during all other periods in assessing compliance. A monitoring malfunction is any sudden, infrequent, not reasonably preventable failure of the monitor to provide valid data. Monitoring failures that are caused in part by poor maintenance or careless operation are not malfunctions. [§63.7332(b); §2103.12.i; §2103.12.h.6; IP 0052-I011b, Condition V.A.3.n]

l. For each capture system applied to pushing emissions and subject to the operating limit in Condition V.J.1.c above, The permittee shall demonstrate continuous compliance by meeting the requirements in Conditions V.J.3.l.1) and V.J.3.l.2) below: [§63.7333(d); §2103.12.i; §2103.12.h.6; IP 0052-I011b, Condition V.A.3.o]

1) If the permittee elects the operating limit for volumetric flow rate in Condition V.J.1.c.1) above: [§63.7333(d)(1)]
   A. Maintaining the daily average volumetric flow rate at the inlet of the control device at or above the minimum level established during the initial or subsequent performance test; and
   B. Checking the volumetric flow rate at least every 8 hours to verify the daily average is at or above the minimum level established during the initial or subsequent performance test and recording the results of each check.

2) If the permittee elects the operating limit for fan motor amperes in Condition V.J.1.c.2) above: [§63.7333(d)(2)]
   A. Maintaining the daily average fan motor amperages at or above the minimum level established during the initial or subsequent performance test; and
   B. Checking the fan motor amperage at least every 8 hours to verify the daily average is at or above the minimum level established during the initial or subsequent performance test and recording the results of each check.

m. The permittee shall demonstrate continuous compliance with the work practice standards for fugitive pushing emissions according to the following requirements: [§63.7334(a); §2103.12.i; §2103.12.h.6; IP 0052-I011b, Condition V.A.3.q]

1) Observe and record the opacity of fugitive emissions for four consecutive pushes per operating day, except the permittee may make fewer or non-consecutive observations as permitted by Condition V.J.3.a.3) above. Maintain records of the pushing schedule for each oven and records indicating the legitimate operational reason for any change in the pushing schedule according to Condition V.J.3.a.4) above.
2) Observe and record the opacity of fugitive emissions from each oven in Coke Oven Battery C at least once every 90 days. If an oven cannot be observed during a 90-day period, observe and record the opacity of the first push of that oven following the close of the 90-day period that can be read in accordance with the procedures in Conditions V.J.3.m.1) above through V.J.3.m.8) below.
3) Make all observations and calculations for opacity observations of fugitive pushing emissions in accordance with Method 9 in Appendix A to 40 CFR 60 using a Method 9 certified observer unless the permittee has an approved alternative procedure in Condition V.J.3.m.7) below.
4) Record pushing opacity observations at 15-second intervals as required in Section 2.4 of Method 9 (Appendix A to 40 CFR Part 60). The requirement in Section 2.4 of Method 9 for a minimum of 24 observations does not apply, and the data reduction requirements in Section

proposed

2.5 of Method 9 do not apply. The requirement in §63.6(h)(5)(ii)(B) for obtaining at least 3 hours of observations (thirty 6-minute averages) to demonstrate initial compliance does not apply.

5) If fewer than six but at least four 15-second observations can be made, use the average of the total number of observations to calculate average opacity for the push. Missing one or more observations during the push (e.g., as the quench car passes behind a building) does not invalidate the observations before or after the interference for that push. However, a minimum of four 15-second readings must be made for a valid observation.
6) Begin observations for a push at the first detectable movement of the coke mass. End observations of a push when the quench car enters the quench tower.
   A. Observe fugitive pushing emissions from a position at least 10 meters from the quench car that provides an unobstructed view and avoids interferences from the topside of the battery. This may require the observer to be positioned at an angle to the quench car rather than perpendicular to it. Typical interferences to avoid include emissions from open standpipes and charging. Observe the opacity of emissions above the battery top with the sky as the background where possible. Record the oven number of any push not observed because of obstructions or interferences.
   B. The permittee may reposition after the push to observe emissions during travel if necessary.

7) If it is infeasible to implement the procedures in Conditions V.J.3.m.1) abovethrough V.J.3.m.6) above for an oven due to physical obstructions, nighttime pushes, or other reasons, the permitte may apply to the Department for permission to use an alternative procedure. The application must provide a detailed explanation of why it is infeasible to use the procedures in Conditions V.J.3.m.1) abovethrough V.J.3.m.6) above, identify the oven and battery numbers, and describe the alternative procedure. An alternative procedure must identify whether the coke in that oven is not completely coked, either before, during, or after an oven is pushed.
8) For each C Battery oven observed that exceeds an opacity of 35 percent for C Battery, the permittee shall take corrective action and/or increase the coking time in accordance with ConditionV.J.3.a above. Maintain records documenting conformance with the requirements in Condition V.J.3.a above.

n. The permittee shall demonstrate continuous compliance with the PEC system operation and maintenance requirements in Condition V.J.6.b below by meeting the following requirements: [§63.7335(b); §2103.12.i; §2103.12.h.6; IP 0052-I011b, Condition V.A.3.s]

1) Making monthly inspections of capture systems according to Condition V.J.6.b.1) below and recording all information needed to document conformance with these requirements;
2) Performing preventative maintenance for each control device according to Condition V.J.6.b.2) below and recording all information needed to document conformance with these requirements; and
3) Initiating and completing corrective action for a bag leak detection system alarm according to Condition V.J.6.b.3) below and recording all information needed to document conformance with these requirements. This includes records of the times the bag leak detection system alarm sounds, and for each valid alarm, the time corrective action was initiated, the corrective action(s) taken, and the date on which corrective action is completed.

o. To demonstrate continuous compliance with the operation and maintenance requirements for the PEC baghouse in ConditionV.J.3.d above, the permittee shall inspect and maintain each baghouse according to the requirements in Conditions V.J.3.d.1) abovethrough V.J.3.d.7) above and record all information needed to document conformance with these requirements. If the permittee

proposed

increases or decreases the sensitivity of the bag leak detection system beyond the limits specified in Condition V.J.3.d.6) above, the permittee shall include a copy of the required written certification by a responsible official in the next semiannual compliance report. [§63.7335(c); §2103.12.i; §2103.12.h.6; IP 0052-I011b, Condition V.A.3.t]

4. Record Keeping Requirements:

a. The permittee shall maintain a current copy of the operation and maintenance plans required in Condition V.J.6.b below onsite and available for inspection upon request. The permittee shall keep the plans for the life of Battery C or until Battery C is no longer subject to the requirements of 40 CFR 63, Subpart CCCCC. [§63.7335(d); §2103.12.j; §2103.12.h.6; IP 0052-I011b, Condition V.A.4.f]

b. The permittee shall keep the records specified in the following conditions: [§63.7342(a); §2103.12.j; §2103.12.h.6; IP 0052-I011b, Condition V.A.4.g]
   1) A copy of each notification and report that the permittee submitted to comply with 40 CFR 63, Subpart CCCCC, including all documentation supporting any initial notification or notification of compliance status that was submitted, according to the requirements in §63.10(b)(2)(xiv).
   2) The records in §63.6(e)(3)(iii) through (v) related to startup, shutdown, and malfunction.
   3) Records of performance tests, performance evaluations, and opacity observations as required in §63.10(b)(2)(viii).

c. For each COMS or CEMS, the permittee shall keep the records specified in the following requirements: [§63.7342(b); §2103.12.j; §2103.12.h.6; IP 0052-I011b, Condition V.A.4.h]

   1) Records described in §63.10(b)(2)(vi) through (xi).
   2) Monitoring data for COMS during a performance evaluation as required in §63.6(h)(7)(i) and (ii).
   3) Previous (that is, superseded) versions of the performance evaluation plan as required in §63.8(d)(3).
   4) Records of the date and time that each deviation started and stopped, and whether the deviation occurred during a period of startup, shutdown, or malfunction or during another period.

d. The permittee shall keep the records in §63.6(h)(6) for visual observations. [§63.7342(c); §2103.12.j; §2103.12.h.6; IP 0052-I011b, Condition V.A.4.i]

e. The permittee shall keep the records required by Conditions V.J.1.f above and V.J.3.l abovethrough V.J.3.o above, to show continuous compliance with each emission limitation, work practice standard, and operation and maintenance requirement. [§63.7342(d); §2103.12.j; §2103.12.h.6; IP 0052-I011b, Condition V.A.4.j]

f. The permittee shall keep records in a form suitable and readily available for expeditious review, according to §63.10(b)(1). [§63.7343(a); §2103.12.j; §2103.12.h.6; IP 0052-I011b, Condition V.A.4.k]

g. As specified in §63.10(b)(1), the permittee shall keep each record for 5 years following the date of each occurrence, measurement, maintenance, corrective action, report, or record. [§63.7343(b); §2103.12.j; §2103.12.h.6; IP 0052-I011b, Condition V.A.4.l]

h. The permittee shall keep each record on site for at least 2 years after the date of each occurrence,

proposed

measurement, maintenance, corrective action, report, or record, according to §63.10(b)(1). The permittee can keep the records offsite for the remaining 3 years. [§63.7343(c); §2103.12.j; §2103.12.h.6; IP 0052-I011b, Condition V.A.4.m]

5. Reporting Requirements:

a. The permittee shall report each instance in which each emission limitation in conditions V.J.1.b abovethrough V.J.1.f above V.J.1.d above (40 CFR Part 60, Subpart CCCCC) that applies was not met. This includes periods of startup, shutdown, and malfunction. The permittee shall also report each instance in which each work practice standard or operation and maintenance requirement in 40 CFR 63, Subpart CCCCC that applies was not met. These instances are deviations from the emission limitations (including operating limits), work practice standards, and operation and maintenance requirements in 40 CFR 63, Subpart CCCCC. These deviations must be reported according to the requirements in Conditions V.J.5.f below through V.J.5.j below. [§63.7336(a); §2103.12.k; §2103.12.h.6; IP 0052-I011b, Condition V.A.5.k]

b. *Startup, shutdowns, and malfunctions.* Consistent with §§63.6(e) and 63.7(e)(1), deviations that occur during a period of startup, shutdown, or malfunction are not violations if the permittee demonstrates to the Department's and the Administrator's satisfaction that the permittee was operating in accordance with §63.6(e)(1). In no case shall the reporting of a malfunction that is considered a breakdown prevent prosecution for any violation of this permit or Article XXI. [§ [§63.7336(b); §2108.01.c.6; §2103.12.k; §2103.12.h.6; IP 0052-I011b, Condition V.A.5.l]

c. The permittee shall submit all of the notifications in §§63.6(h)(4) and (5), 63.7(b) and (c), 63.8(e) and (f)(4), and 63.9(b) through (h) that apply by the specified dates. [§63.7340(a); §2103.12.k; §2103.12.h.6; IP 0052-I011b, Condition V.A.5.m]

d. The permittee shall submit a notification of intent to conduct a performance test at least 60 calendar days before the performance test is scheduled to begin as required in §63.7(b)(1). [§63.7340(d); §2103.12.k; §2103.12.h.6; IP 0052-I011b, Condition V.A.5.o]

e. The permittee shall submit a notification of compliance status according to §63.9(h)(2)(ii) if a performance test, opacity observation, or other initial compliance demonstration is required to be conducted,. [§63.7340(e); §2103.12.k; §2103.12.h.6; IP 0052-I011b, Condition V.A.5.p]

1) For each initial compliance demonstration that does not include a performance test, the permittee shall submit the notification of compliance status before the close of business on the 30th calendar day following the completion of the initial compliance demonstration.
2) For each initial compliance demonstration that does include a performance test, the permittee shall submit the notification of compliance status, including the performance test results, before the close of business on the 60th calendar day following completion of the performance test according to §63.10(d)(2).

f. Unless the Administrator and the Department have approved a different schedule, the permittee shall submit quarterly compliance reports for battery stacks and semiannual compliance reports for the PEC stack to the Department according to the following requirements: [§63.7341(a); §2103.12.k; §2103.12.h.6; IP 0052-I011b, Condition V.A.5.q]

1) Each semiannual compliance report shall cover the semiannual reporting period as specified in General Condition III.15.d above. . All semiannual compliance reports must be postmarked or

proposed

delivered no later than July 31 or January 31, whichever date is the first date following the end of the semiannual reporting period.

2) For each affected source that is subject to permitting regulations pursuant to 40 CFR Part 70 or 40 CFR Part 71, and if the permitting authority has established dates for submitting semiannual reports pursuant to 40 CFR 70.6(a)(3)(iii)(A) or 40 CFR 71.6(a)(3)(iii)(A), the permittee may submit the first and subsequent compliance reports according to the dates the Department has established instead of according to the dates in Conditions V.J.5.f.1) above.

g. *Quarterly compliance report contents.* The quarterly reports must include the information in Conditions V.J.5.h.1) belowthrough V.J.5.h.3) below and as applicable, in Conditions V.J.5.h.4) belowthrough V.J.5.h.8) below. [§63.7341(b); §2103.12.k; §2103.12.h.6; IP 0052-I011b, Condition V.A.5.r]

h. Each semiannual compliance report must provide information on compliance with the emission limitations, work practice standards, and operation and maintenance requirements for all affected sources except battery stacks. The reports must include the information in Conditions V.J.5.h.1) below through V.J.5.h.3) below, and as applicable, Conditions V.J.5.h.4) below through V.J.5.h.8) below. [§63.7341(c); §2103.12.k; §2103.12.h.6; IP 0052-I011b, Condition V.A.5.s]

1) Company name and address.
2) Statement by a responsible official, with the official's name, title, and signature, certifying the truth, accuracy, and completeness of the content of the report.
3) Date of report and beginning and ending dates of the reporting period.
4) If the permittee had a startup, shutdown, or malfunction during the reporting period and took actions consistent with the startup, shutdown, and malfunction plan, the compliance report must include the information in §63.10(d)(5)(i).
5) If there were no deviations from the continuous compliance requirements in Conditions V.J.1.f above andV.J.3.l abovethrough V.J.3.o above, a statement that there were no deviations from the emission limitations, work practice standards, or operation and maintenance requirements during the reporting period.
6) If there were no periods during which a continuous monitoring system (including COMS, continuous emission monitoring system (CEMS), or CPMS) was out-of-control as specified in §63.8(c)(7), a statement that there were no periods during which a continuous monitoring system was out-of-control during the reporting period.
7) For each deviation from an emission limitation in 40 CFR 63, Subpart CCCCC (including quench water limits) and for each deviation from the requirements for work practice standards in 40 CFR 63, Subpart CCCCC that occurs at an affected source where the permittee is not using a continuous monitoring system (including a COMS, CEMS, or CPMS) to comply with the emission limitations in 40 CFR 63, Subpart CCCCC, the compliance report must contain the information in Conditions V.J.5.h.4) aboveand V.J.5.h.7)A below. This includes periods of startup, shutdown, and malfunction.
   A. The total operating time of each affected source during the reporting period.
   B. Information on the number, duration, and cause of deviations (including unknown cause, if applicable) as applicable and the corrective action taken.
8) For each deviation from an emission limitation occurring at an affected source where the permittee is using a continuous monitoring system (including COMS, CEMS, or CPMS) to comply with the emission limitation in 40 CFR 63, Subpart CCCCC, the permittee shall include the information in Conditions V.J.5.h.4) above and V.J.5.h.8)A belowthrough V.J.5.h.8)L below. This includes periods of startup, shutdown, and malfunction.
   A. The date and time that each malfunction started and stopped.

proposed

B. The date and time that each continuous monitoring system (including COMS, CEMS, or CPMS) was inoperative, except for zero (low-level) and high-level checks.
C. The date, time, and duration that each continuous monitoring system (including COMS, CEMS, or CPMS) was out-of-control, including the information in §63.8(c)(8).
D. The date and time that each deviation started and stopped, and whether each deviation occurred during a period of startup, shutdown, or malfunction or during another period.
E. A summary of the total duration of the deviation during the reporting period and the total duration as a percent of the total source operating time during that reporting period.
F. A breakdown of the total duration of the deviations during the reporting period into those that are due to startup, shutdown, control equipment problems, process problems, other known causes, and other unknown causes.
G. A summary of the total duration of continuous monitoring system downtime during the reporting period and the total duration of continuous monitoring system downtime as a percent of the total source operating time during the reporting period.
H. An identification of each HAP that was monitored at the affected source.
I. A brief description of the process units.
J. A brief description of the continuous monitoring system.
K. The date of the latest continuous monitoring system certification or audit.
L. A description of any changes in continuous monitoring systems, processes, or controls since the last reporting period.

i. If the permittee had a startup, shutdown, or malfunction during the semiannual reporting period that was not consistent with the startup, shutdown, and malfunction plan, the permittee shall submit an immediate startup, shutdown, and malfunction report according to the requirements in §63.10(d)(5)(ii). [§63.7341(d); §2103.12.k; §2103.12.h.6; IP 0052-I011b, Condition V.A.5.t]

j. If the permittee submits a compliance report for an affected source along with, or as part of, the semiannual monitoring report required by 40 CFR 70.6(a)(3)(iii)(A), and the compliance report includes all the required information concerning deviations from any emission limitation or work practice standard in 40 CFR Part 63, Subpart CCCCC, submission of the compliance report satisfies any obligation to report the same deviations in the semiannual monitoring report. However, submission of a compliance report does not otherwise affect any obligation the permittee may have to report deviations from permit requirements to the Department. [§2103.12.k; §2103.12.h.6; §63.7341(e)]

k. Reporting instances of non-compliance, does not relieve the permittee of the requirement to report breakdowns in accordance with Site Level Condition IV.9, if appropriate. [§2102.04.b.4]

6. Work Practice Standard:

a. As required by §63.6(e)(1)(i), the permittee shall always operate and maintain Coke Oven Battery C, including air pollution control and monitoring equipment, in a manner consistent with good air pollution control practices for minimizing emissions at least to the levels required by 40 CFR 63, Subpart CCCCC and the requirements in this installation permit. [§63.7300(a); §2103.12.h.6; IP 0052-I011b, Condition V.A.6.o]

b. The permittee shall prepare and operate at all times according to a written operation and maintenance plan for each capture system and control device applied to pushing emissions from Coke Oven Battery C. Each plan must address at a minimum the following elements: [§ 63.7300(c); §2103.12.h.6; IP 0052-I011b, Condition V.A.6.q]

proposed

1) Monthly inspections of the equipment that are important to the performance of the total capture system (e.g., pressure sensors, dampers, and damper switches). This inspection must include observations of the physical appearance of the equipment (e.g., presence of holes in ductwork or hoods, flow constrictions caused by dents or accumulated dust in ductwork, and fan erosion). In the event a defect or deficiency is found in the capture system (during a monthly inspection or between inspections), the permittee shall complete repairs within 30 days after the date that the defect or deficiency is discovered. If the permittee determines that the repairs cannot be completed within 30 days, the permittee shall submit a written request for an extension of time to complete the repairs that must be received by the Department not more than 20 days after the date that the defect or deficiency is discovered. The request must contain a description of the defect or deficiency, the steps needed and taken to correct the problem, the interim steps being taken to mitigate the emissions impact of the defect or deficiency, and a proposed schedule for completing the repairs. The request shall be deemed approved unless and until such time as the Department notifies the permittee that it objects to the request. The Department may consider all relevant factors in deciding whether to approve or deny the request (including feasibility and safety). Each approved schedule must provide for completion of repairs as expeditiously as practicable, and the Department may request modifications to the proposed schedule as part of the approval process. [§2102.04.b.6; 63.7300(c)(1)]
2) Preventative maintenance for each control device, including a preventative maintenance schedule that is consistent with the manufacturer's instructions for routine and long-term maintenance. [§2102.04.b.6; 63.7300(c)(2)]
3) Corrective action for all baghouses applied to pushing emissions. In the event a bag leak detection system alarm is triggered, the permittee shall initiate corrective action to determine the cause of the alarm within 1 hour of the alarm, initiate corrective action to correct the cause of the problem within 24 hours of the alarm, and complete the corrective action as soon as practicable. Actions may include, but are not limited to[§2102.04.b.6; 63.7300(c)(3)] :
   A. Inspecting the baghouse for air leaks, torn or broken bags or filter media, or any other condition that may cause an increase in emissions.
   B. Sealing off defective bags or filter media.
   C. Replacing defective bags or filter media or otherwise repairing the control device.
   D. Sealing off a defective baghouse compartment.
   E. Cleaning the bag leak detection system probe, or otherwise repairing the bag leak detection system.
   F. Shutting down the process producing the particulate emissions.

c. During the C Battery coke production ramp-up stage, the PROven® System, Pushing Emission Control (PEC) Systems, stage charging of coal to the ovens and other control measures to limit pollutant emissions shall be installed and operating according to good air pollution control practices. [§2103.12.h.6; IP 0052-I011b, Condition VI.26.d]

7. Additional Requirements:

The permittee shall comply with each applicable requirement of the NESHAP General Provisions (40 CFR part 63, subpart A) as shown in Table 1 in 40 CFR 63, Subpart CCCCC. [§63.7350]

PERMIT SHIELD IN EFFECT

proposed

K. Quench Towers No. 1 and B: P013 & P017

Process Description: Water quenching of incandescent coke from Batteries No. 1, 2, 3 and B
Facility IDs: P013 & P017
Raw Materials: Incandescent coke, water
Control Device: Baffles installed in the quench tower to capture entrained water droplets

1. Restrictions:

a. The permittee shall not quench, or allow the quenching of, coke unless the emissions from such quenching are vented through a baffled quench tower and the water used for such quenching meets the requirements of 40 CFR Subpart CCCCC. Make-up water for quenching shall be equivalent to, or better than, the water quality standards established for the nearest stream or river by regulations promulgated by the DEP under the Pennsylvania Clean Streams Law, Act of June 22, 1937, PL. 1987, as amended, 35 P.S. 691.1 et seq., except that water from the nearest stream or river may be used for make-up water for the quenching of coke. The nearest stream or river to the U.S Steel Corporation Mon Valley Works Clairton Plant shall be the Monongahela River. Measurements of water quality shall be performed according to prcoedures established or approved by the Commonwealth. [§2105.21.g]

b. The permittee shall meet the following requirements for each quench tower and backup quench station: [§2103.12.h.6; §63.7295(a)]

1) For the quenching of hot coke, the permittee shall meet one of the following requirements: [§2103.12.h.6; §63.7295(a)(1)]

A. The concentration of total dissolved solids (TDS) in the water used for quenching must not exceed 1,100 milligrams per liter (mg/L); or
B. The sum of the concentrations of benzene, benzo (a) pyrene, and naphthalene in the water used for quenching must not exceed the applicable site-specific limit approved by the Department.

2) The permittee shall use acceptable makeup water, as defined in §63.7352, for quenching [§2103.12.h.6; §63.7295(a)(2)].

c. For each by-product coke oven batteries subject to the requirements for quench water in V.K.1.b.1), above, the permittee shall submit a notification of compliance status containing the results of the quench water performance test (TDS or constituent limit) before the close of business on the 30th calendar days following the completion of the compliance demonstration. For each particulate matter emission limitation that applies, the permittee shall submit a notification of compliance status containing the results of the performance test before the close of business on the 60th calendar days following completion of the performance test according to §63.10(d)(2). [§2103.12.h.6; §63.7326(d)]

proposed

d. Emissions from Quench Tower No. 1 shall not exceed the limits listed in Table V-K-1 at any time: [§2105.21.e.3; §2105.03; SO_2 SIP IP 0052-I017, Condition V.B.1.c]

TABLE V-K-1 - Emission Limitations for Quench Tower No. 1

POLLUTANT***	HOURLY EMISSION LIMIT (lb/hr)	ANNUAL EMISSION LIMIT (tons/year)*
Particulate Matter	8.51	37.30
PM_{10}	5.11	23.40
$PM_{2.5}$	4.26	18.25
PM-condensable	3.51	15.42
SO_2	0.75	3.29
NO_X	0.35	1.55
VOC	2.22	9.71

*A year is defined as any consecutive 12-month period.
**SO_2 limit is based on SO_2 SIP IP 0052-I017.

e. Emissions from Quench Tower B shall not exceed the limits listed in Table V-K-2 at any time: [§2105.21.e.3; §2105.03; SO_2 SIP IP 0052-I017, Condition V.B.1.c]

TABLE V-K-2 - Emission Limitations for Quench Tower B

POLLUTANT***	HOURLY EMISSION LIMIT (lb/hr)	ANNUAL EMISSION LIMIT (tons/year)*
Particulate Matter	6.87	30.08
PM_{10}	4.12	18.05
$PM_{2.5}$	3.43	15.04
PM-condensable	2.64	11.57
SO_2	4.09	17.91
NO_X	0.66	2.89
VOC	2.24	9.83

*A year is defined as any consecutive 12-month period.
**SO_2 limit is based on SO_2 SIP IP 0052-I017.

2. Testing Requirements:

a. The permittee shall conduct performance tests to demonstrate compliance with the TDS limit or constituent limit for quench water in V.K.1.b.1) or §63.7295(a)(1) by April 14, 2006 [§2103.12.h.6; §63.7320(b); §63.7283(a)]

b. If the permittee elects the TDS limit for quench water in V.K.1.b.1)A above, the permittee shall

conduct each performance test according to the following conditions: [§2103.12.h.6; §63.7325(a)]

1) Take the quench water sample from a location that provides a representative sample of the quench water as applied to the coke (e.g., from the header that feeds water to the quench tower reservoirs). Conduct sampling under normal and representative operating conditions.
2) Determine the TDS concentration of the sample using Method 160.1 in 40 CFR Part 136.3 (see "residue—filterable"'), except that the permittee must dry the total filterable residue at 103 to 105 [deg] C (degrees Centigrade) instead of 180 [deg] C.

c. If at any time the permittee elects to meet the alternative requirements for quench water in V.K.1.b.1)B above, the permittee shall establish a site-specific constituent limit according to the procedures in Conditions V.K.2.c.1) through V.K.2.c.4) below: [§2103.12.h.6; §63.7325(b)]

1) Take a minimum of nine quench water samples from a location that provides a representative sample of the quench water as applied to the coke (e.g., from the header that feeds water to the quench tower reservoirs). Conduct sampling under normal and representative operating conditions.
2) For each sample, determine the TDS concentration according to the requirements in Condition V.K.2.b above, and the concentration of benzene, benzo(a)pyrene, and naphthalene using the applicable methods in 40 CFR Part 136 or an approved alternative method.
3) Determine and record the highest sum of the concentrations of benzene, benzo(a)pyrene, and naphthalene in any sample that has a TDS concentration less than or equal to the TDS limit of 1,100 mg/L. This concentration is the site-specific constituent limit.
4) Submit the site-specific limit, sampling results, and all supporting data and calculations to Department for review and approval.

d. If the permittee elects the constituent limit for quench water in V.K.1.b.1) above, the permittee shall conduct each performance test according to the conditions in Conditions V.K.2.d.1) and V.K.2.d.2) below: [§2103.12.h.6; §63.7325(c)]

1) Take a quench water sample from a location that provides a representative sample of the quench water as applied to the coke (e.g., from the header that feeds water to the quench tower reservoirs). Conduct sampling under normal and representative operating conditions.
2) Determine the sum of the concentration of benzene, benzo(a)pyrene, and naphthalene in the sample using the applicable methods in 40 CFR Part 136 or an approved alternative method.

e. The permittee shall have particulate (PM_{10} and $PM_{2.5}$), sulfur oxides (SOx) and VOC emissions tests performed on the quench tower outlet according to Site Level Condition IV.14.a above and at least once every two years thereafter to demonstrate compliance with the mass emission standard in Conditions V.K.1.d aboveand V.K.1.e above. Emission tests shall be conducted according to the methodologies specified in 40 CFR 60, Appendix A or methodologies approved by the Department. The permittee shall submit a stack test protocol to the Department for approval at least 45 days prior to the test dates. The permittee shall: [§2108.02.a & e;

1) Sample at an isokinetic rate with an isokinetic variation greater than 90% and less than 110%;
2) Sample for the duration of each quench for a total of 30 quenches per test run;
3) Perform each test run for at least 60 minutes in duration and have a minimum sample volume of 50 dscf;
4) Include sample example calculations;
5) The test report shall include the test results in terms of lbs/hr and lbs/ton coke quenched.

proposed

f. The Department reserves the right to require additional emissions testing sufficient to assure compliance with the terms and conditions of this permit. Such testing shall be performed in accordance with Site Level Condition IV.14 above and Article XXI §2108.02. [§2103.12.h.1]

3. Monitoring Requirements:

a. The permittee shall inspect the quench tower monthly for damaged or missing baffles and blockage and initiate repair or replacement of damaged or missing baffles within 30 days and complete as soon as practicable. [§2103.12.i]

b. Beginning on the first day compliance is required under §63.7283, the permittee shall demonstrate continuous compliance with the TDS limit for quenching in §63.7295(a)(1)(i) by meeting the requirements in Conditions V.K.3.b.1) and V.K.3.b.2) below: [§2103.12.i; §2103.12.h.6; §63.7333(f)]

1) Maintaining the TDS content of the water used to quench hot coke at 1,100 mg/L or less; and
2) Determining the TDS content of the quench water at least weekly according to the requirements in Condition V.K.2.b above and recording the sample results.

c. The permittee shall demonstrate continuous compliance with the constituent limit for quenching in Condition V.K.1.b.2) above by meeting the following requirements: [§2103.12.i; §63.7333(g)]

1) Maintaining the sum of the concentrations of benzene, benzo(a)pyrene, and naphthalene in the water used to quench hot coke at levels less than or equal to the site-specific limit approved by the Department; and
2) Determining the sum of the constituent concentrations at least monthly according to the requirements in §63.7325(c) and recording the sample results.

4. Record Keeping Requirements:

a. The permittee shall maintain records of all quench tower inspections when missing or damaged baffles or blockages are discovered. [§2103.12.j]

b. The permittee shall maintain records of all repairs or replacement of baffles. The record keeping shall include a description of the repair or replacement, the date repairs and/or replacements were initiated and the date repairs and/or replacements were completed. [§2103.12.j]

c. The permittee shall keep the records required in Conditions V.K.3.a and V.K.3.b above and V.K.4.e below to show continuous compliance with each emission limitation, work practice standard, and operation and maintenance requirement that applies. [§2103.12.j; §2103.12.h.6; §63.7342(d)]

d. The permittee shall keep records in a form suitable and readily available for expeditious review, according to §63.10(b)(1). [§2103.12.j; §2103.12.h.6; §63.7343(a)]

e. For each coke oven battery subject to the work practice standard for quenching in V.K.6.a below, the permittee must demonstrate continuous compliance according to the requirements of Conditions V.K.4.e.1) through V.K.4.e.3) below: [§2103.12.j; §2103.12.h.6; §63.7334(e)]

1) Maintaining baffles in each quench tower such that no more than 5 percent of the cross-sectional area of the tower is uncovered or open to the sky as required in Condition V.K.6.a.1)

proposed

below;

2) Maintaining records that document conformance with the washing, inspection, and repair requirements in Condition V.K.6.a.2) below, including records of the ambient temperature on any day that the baffles were not washed; and
3) Maintaining records of the source of make-up water to document conformance with the requirement for acceptable make-up water in Condition V.K.1.b.2) above.

5. Reporting Requirements:

a. The permittee shall submit semiannual reports to the Department in accordance General Condition III.15.d above of the record keeping information required in Conditions V.K.4.a and V.K.4.b above. [§2103.12.k]

b. For each coke oven battery, the permittee shall demonstrate initial compliance with the work practice standards for quenching in Condition V.K.6.a below by certifying in the notification of compliance status that the requirements of Conditions V.K.5.b.1) and V.K.5.b.2) below have been met: [§2103.12.k; §2103.12.h.6; §63.7327(e)]

1) Installed the required equipment in each quench tower; and
2) The permittee will meet each of the work practice requirements beginning no later than April 14, 2006

c. The permittee must submit semiannual compliance reports for the quench towers to the Department in accordance with General Condition III.15 above. [§2103.12.k; §2103.12.h.6; §63.7341(a)]

d. *Semiannual compliance report contents.* Each compliance report must provide information on compliance with the emission limitations, work practice standards, and operation and maintenance requirements for the quench tower. The reports must include the information in Conditions V.K.5.d.1) through V.K.5.d.3) below, and as applicable, Conditions V.K.5.d.4) through V.K.5.d.6) below. §[63.7341(c)]

1) Company name and address.
2) Statement by a responsible official, with the official's name, title, and signature, certifying the truth, accuracy, and completeness of the content of the report.
3) Date of report and beginning and ending dates of the reporting period.
4) If the permittee had a startup, shutdown, or malfunction during the reporting period and took actions consistent with the startup, shutdown, and malfunction plan, the compliance report must include the information in §63.10(d)(5)(i).
5) If there were no deviations from the continuous compliance requirements in Conditions V.K.3.b, V.K.3.c and V.K.4.e above (for the quench tower), a statement that there were no deviations from the emission limitations, work practice standards, or operation and maintenance requirements during the reporting period.
6) For each deviation from an emission limitation in 40 CFR 63, Subpart CCCCC (including quench water limits) and for each deviation from the requirements for work practice standards in 40 CFR 63, Subpart CCCCC that occurs at the quench tower, the compliance report must contain the information in Conditions V.K.5.d.4) and V.K.5.d.6)A through V.K.5.d.6)B. This includes periods of startup, shutdown, and malfunction.

A. The total operating time of the quench tower during the reporting period.
B. Information on the number, duration, and cause of deviations (including unknown cause,

proposed

if applicable) as applicable and the corrective action taken.

6. Work Practice Standards:

a. For quench towers 1,5,7 and B, the permittee shall meet each of the following requirements: [§2103.12.h.6; §63.7295(b)]

1) The permittee shall equip each quench tower with baffles such that no more than 5 percent of the cross sectional area of the tower may be uncovered or open to the sky.
2) The permittee shall wash the baffles in each quench tower once each day that the tower is used to quench coke, except as specified in the following conditions:

A. The permittee is not required to wash the baffles in a quench tower if the highest measured ambient temperature remains less than 30 degrees Fahrenheit throughout that day (24-hour period). If the measured ambient temperature rises to 30 degrees Fahrenheit or more during the day, the permittee must resume daily washing according to the schedule in the operation and maintenance plan.
B. The permittee must continuously record the ambient temperature on days that the baffles were not washed.

3) Inspect each quench tower monthly for damaged or missing baffles and blockage.
4) Initiate repair or replacement of damaged or missing baffles within 30 days and complete as soon as practicable.

b. As provided in §63.6(g), the permittee may request to use an alternative to the work practice standards in Condition V.K.6.a above. [§2103.12.h.6; §63.7295(c)]

c. At no time shall the permittee operate the following quench towers at the facility unless they are properly operated and maintained according to good engineering and air pollution control practices by performing regular maintenance with the exception of actions to mitigate emergency conditions. [RACT IP 0052-I020b, V.E.1.b; 25 Pa Code §129.99; §2103.12.a.2.B]

7. Additional Requirements:

None except as provided elsewhere.

PERMIT SHIELD IN EFFECT

proposed

L. Quench Tower 5A: P051

Process Description:	Water quenching of incandescent coke from Batteries 13-15
Facility ID:	P051
Max. Design Rate/Units:	1,270,200 tons of coke per year
Capacity:	1,270,200 tons of coke per year
Raw Materials:	Incandescent Coke
Control Device(s):	Baffles or their approved equivalents

1. Restrictions:

a. The permittee shall not quench, or allow the quenching of, coke unless the emissions from such quenching are vented through a baffled quench tower and the water used for such quenching meets the requirements of 40 CFR Subpart CCCCC. Make-up water for quenching shall be equivalent to, or better than, the water quality standards established for the nearest stream or river by regulations promulgated by the DEP under the Pennsylvania Clean Streams Law, Act of June 22, 1937, PL. 1987, as amended, 35 P.S. 691.1 et seq., except that water from the nearest stream or river may be used for make-up water for the quenching of coke. The nearest stream or river to the U.S Steel Corporation Mon Valley Works Clairton Plant shall be the Monongahela River. Measurements of water quality shall be performed according to prcoedures established or approved by the Commonwealth. [§2105.21.g; §2103.12.h.6; §2103.12.i; IP 0052-I014a, Condition V.A.1.a]

b. The permittee shall meet the following requirements for the quench tower and backup quench station: [§2102.04.b.6; §63.7295(a); IP 0052-I014a, Condition V.A.5.a]

1) For the quenching of hot coke, the permittee shall meet the requirements in Conditions V.L.1.b.1)A or V.L.1.b.1)B below
   A. The concentration of total dissolved solids (TDS) in the water used for quenching must not exceed 1,100 milligrams per liter (mg/L); or
   B. The sum of the concentrations of benzene, benzo(a)pyrene, and naphthalene in the water used for quenching must not exceed the applicable site-specific limit approved by the Department.
2) The permittee shall use acceptable makeup water, as defined in §63.7352, as makeup water for quenching.

c. The permittee has demonstrated initial compliance with TDS limit in Condition V.L.1.b.1)A above if the TDS concentration, as measured according to the performance test procedures in Condition V.L.2.b below, does not exceed 1,100 mg/l. [§63.7326(c)(1); §2103.12.h.6; IP 0052-I014a, Condition V.A.1.c]

d. The permittee has demonstrated initial compliance with the constituent limit in Condition V.L.1.b.1)B above if: [§63.7326(c)(2); §2103.12.h.6; IP 0052-I014, Condition V.A.1.d]

   A. The permittee has established a site-specific constituent limit according to the procedures in Condition V.L.2.c below; and
   B. The sum of the constituent concentrations, as measured according to the performance test procedures in Condition V.L.2.d below, is less than or equal to the site-specific limit.

proposed

e. The permittee must comply with each emission limitation, work practice standard, and operation and maintenance requirement in 40 CFR Part 63, Subpart CCCCC that applies to the permittee upon initial startup. [§63.7283(c); §2103.12.h.6; IP 0052-I014a, Condition V.A.1.e]

f. The permittee shall not quench or allow the quenching of coke through the quench tower unless there is installed and maintained a double set of baffles or equivalent as approved by the Department. [§2103.12.h.6; IP 0052-I014a, Condition V.A.1.f]

g. The permittee shall not quench or allow the quenching of coke through the quench tower unless there is installed, maintained and operated a system of mist sprays below the baffles to mist the quench plume as it rises in the tower. [§2103.12.h.6; IP 0052-I014a, Condition V.A.1.g]

h. The permittee shall construct the quench tower to be greater than 150 feet in height and to have sufficient cross sectional area to ensure the flow is developed prior to entering the baffles [§2103.12.h.6; IP 0052-I014a, Condition V.A.1.g]

i. Emissions from Quench Tower 5A shall not exceed the limitations in Table V-L-1: [§2103.12.h.6; IP 0052-I014, Condition V.A.1.f; SO_2 SIP IP 0052-I017, Condition V.B.1.c]

Table V-L-1 - Quench Tower 5A Emission Limitations

POLLUTANT	HOURLY EMISSION LIMIT (lb/hr)	ANNUAL EMISSION LIMIT (tons/year)[1]
Particulate Matter (total)	29.25	128.11
PM_{10}	28.53	124.94
$PM_{2.5}$	27.80	121.76
NO_X	0.43	1.90
Sulfur Dioxides**	7.56	33.11
Volatile Organic Compounds	25.87	113.29

[1]A year is defined as any 12 consecutive months.
**SO_2 SIP IP 0052-I017, Condition V.B.1.c.

2. Testing Requirements:

a. The permittee shall conduct performance tests to demonstrate compliance with the TDS limit or constituent limit for quench water in Condition V.L.1.b.1) above, as specified in Condition V.L.1.e above [§2108.02; §63.7320(b); §2103.12.h.6; IP 0052-I014, Condition V.A.2.a]

b. If the permittee elects the TDS limit for quench water in Condition V.L.1.b.1)A above, the permittee shall conduct each performance test according to the following conditions: [§63.7325(a); §2108.02; IP 0052-I014, Condition V.A.2.b]

1) Take the quench water sample from a location that provides a representative sample of the quench water as applied to the coke (e.g., from the header that feeds water to the quench tower reservoirs). Conduct sampling under normal and representative operating conditions. [§2102.04.b.6; §63.7325(a)(1)]

proposed

2) Determine the TDS concentration of the sample using Method 160.1 in 40 CFR part 136.3 (see "residue—filterable"), except that the permittee shall dry the total filterable residue at 103 to 105 °C (degrees Centigrade) instead of 180 °C. [§63.7325(a)(2)]

c. If at any time the permittee elects to meet the alternative requirements for quench water in Condition V.L.1.b.1)B above the permittee shall establish a site-specific constituent limit according to the following procedures: [§63.7325(b); IP 0052-I014, Condition V.A.2.c]

1) Take a minimum of nine quench water samples from a location that provides a representative sample of the quench water as applied to the coke (e.g., from the header that feeds water to the quench tower reservoirs). Conduct sampling under normal and representative operating conditions.
2) For each sample, determine the TDS concentration according to the requirements in Condition V.L.2.b.2) above and the concentration of benzene, benzo(a)pyrene, and naphthalene using the applicable methods in 40 CFR Part 136 or an approved alternative method
3) Determine and record the highest sum of the concentrations of benzene, benzo(a)pyrene, and naphthalene in any sample that has a TDS concentration less than or equal to the TDS limit of 1,100 mg/L. This concentration is the site-specific constituent limit.
4) Submit the site-specific limit, sampling results, and all supporting data and calculations to the Department for review and approval.

d. If the permittee elects the constituent limit for quench water in Condition V.L.1.b.1)B above, the permittee shall conduct each performance test according to the following conditions: [§63.7325(c)]

1) Take a quench water sample from a location that provides a representative sample of the quench water as applied to the coke (*e.g.,* from the header that feeds water to the quench tower reservoirs). Conduct sampling under normal and representative operating conditions.
2) Determine the sum of the concentration of benzene, benzo(a)pyrene, and naphthalene in the sample using the applicable methods in 40 CFR Part 136 or an approved alternative method.

e. The permittee shall have particulate (PM_{10} and $PM_{2.5}$), sulfur oxides and VOC emissions tests performed on the quench tower outlet according to Site Level Condition IV.14.a above and at least once every two years thereafter to demonstrate compliance with the mass emission standard in Condition V.L.1.f above. Emission tests shall be conducted according to the methodologies specified in 40 CFR 60, Appendix A or methodologies approved by the Department. The permittee shall submit a stack test protocol to the Department for approval at least 45 days prior to the test dates. The permittee shall: [§2108.02.a & e; IP 0052-I014a, Condition V.A.2.e]

1) Sample at an isokinetic rate with an isokinetic variation greater than 90% and less than 110%;
2) Sample for the duration of each quench for a total of 30 quenches per test run;
3) Perform each test run for at least 60 minutes in duration and have a minimum sample volume of 50 dscf;
4) Include sample example calculations;
5) The test report shall include the test results in terms of lbs/hr and lbs/ton coke quenched.

f. The Department reserves the right to require additional emissions testing sufficient to assure compliance with the terms and conditions of this permit. Such testing shall be performed in accordance with Article XXI §2108.02. [§2103.12.h.1]

proposed

3. Monitoring Requirements:

a. Beginning on the first day compliance is required under Condition V.L.1.e above, the permittee shall demonstrate continuous compliance with the TDS limit for quenching in Condition V.L.1.b.1)A above by meeting the following requirements: [§63.7333(f); §2103.12.h.6; §2103.12.i; IP 0052-I014a, Condition V.A.3.a]

1) Maintaining the TDS content of the water used to quench hot coke at 1,100 mg/L or less; and
2) Determining the TDS content of the quench water at least weekly according to the requirements in Condition V.L.2.b above and recording the sample results.

b. Beginning on the first day compliance is required under Condition V.L.1.e above, the permittee shall demonstrate continuous compliance with the constituent limit for quenching in Condition V.L.2.b.2) above by meeting the following requirements: [§63.7333(g); §2103.12.h.6; §2103.12.i; IP 0052-I014a, Condition V.A.3.b]

1) Maintaining the sum of the concentrations of benzene, benzo(a)pyrene, and naphthalene in the water used to quench hot coke at levels less than or equal to the site-specific limit approved by the Department; and
2) Determining the sum of the constituent concentrations at least monthly according to the requirements in Condition V.L.2.d above and recording the sample results.

4. Record Keeping Requirements:

a. For each work practice standard for quenching in Condition V.L.6.a below, the permittee shall demonstrate continuous compliance according to the following requirements: [§63.7334(e); §2103.12.j; IP 0052-I014a, Condition V.A.4.a]

1) Maintaining records that document that the quench tower is equipped with baffles such that no more than 5 percent of the cross-sectional area of the tower is uncovered or open to the sky as required in condition V.L.6.a.1) below;

2) Maintaining records that document conformance with the washing, inspection, and repair requirements in Conditions V.L.6.a.2) and V.L.6.c below, including records of the ambient temperature on any day that the baffles were not washed; and

3) Maintaining records of the source of makeup water to document conformance with the requirements for acceptable make-up water in Condition V.L.1.b.2) above.

5. Reporting Requirements:

a. The permittee has demonstrated initial compliance with the work practice standards for quenching in Condition V.L.6.a below if the permittee certifies in the notification of compliance status that the following requirements have been met: [§63.7327(e); §2103.12.k; IP 0052-I014a, Condition V.A.5.a]

1) The permittee has installed the required equipment in the quench tower; and
2) The permittee will meet each of the work practice requirements beginning no later than the compliance date that is specified in Condition V.L.1.e above.

proposed

b. The permittee shall submit a notification of compliance status containing the results of the quench water performance test (TDS or constituent limit) according to Condition V.L.5.c below. [§63.7326(d); §2103.12.k; IP 0052-I014a, Condition V.A.3.b].

c. The permittee shall submit a notification of compliance status according to §63.9(h)(2)(ii) if a performance test, opacity observation, or other initial compliance demonstration is required to be conducted,. [§63.7340(e); §2103.12.k; IP 0052-I014a, Condition V.A.3.c]

1) For each initial compliance demonstration that does not include a performance test, the permittee shall submit the notification of compliance status before the close of business on the 30th calendar day following the completion of the initial compliance demonstration.
2) For each initial compliance demonstration that does include a performance test, the permittee shall submit the notification of compliance status, including the performance test results, before the close of business on the 60th calendar day following completion of the performance test according to §63.10(d)(2).

d. *Semiannual compliance report contents.* Each compliance report must provide information on compliance with the emission limitations, work practice standards, and operation and maintenance requirements for the quench tower. The reports must include the information in Conditions V.L.5.d.1) through V.L.5.d.3) below, and as applicable, Conditions V.L.5.d.4) through V.L.5.d.6) below. [§63.7341(c); §2103.12.k; IP 0052-I014a, Condition V.A.3.d]

1) Company name and address.
2) Statement by a responsible official, with the official's name, title, and signature, certifying the truth, accuracy, and completeness of the content of the report.
3) Date of report and beginning and ending dates of the reporting period.
4) If the permittee had a startup, shutdown, or malfunction during the reporting period and took actions consistent with the startup, shutdown, and malfunction plan, the compliance report must include the information in §63.10(d)(5)(i).
5) If there were no deviations from the continuous compliance requirements in Conditions V.L.3.a, V.L.3.b and V.L.4.a above (for the quench tower), a statement that there were no deviations from the emission limitations, work practice standards, or operation and maintenance requirements during the reporting period.
6) For each deviation from an emission limitation in 40 CFR 63, Subpart CCCCC (including quench water limits) and for each deviation from the requirements for work practice standards in 40 CFR 63, Subpart CCCCC that occurs at the quench tower, the compliance report must contain the information in Conditions V.L.5.d.4) and V.L.5.d.6). This includes periods of startup, shutdown, and malfunction.
   A. The total operating time of the quench tower during the reporting period.
   B. Information on the number, duration, and cause of deviations (including unknown cause, if applicable) as applicable and the corrective action taken.

e. The permittee shall report 12-month rolling total emissions using the results of the most recent emissions test in accordance with General Condition III.15.d above. [§2103.12.k; IP 0052-I014a, Condition V.A.5.e]

f. Reporting instances of non-compliance in accordance with the Startup Shutdown Malfunction Plan, does not relieve the permittee of the requirement to report breakdowns in accordance with Site Level Condition IV.9, if appropriate. [§2103.12.k]

proposed

6. Work Practice Standard:

a. The permittee shall meet each of the following requirements for Quench Tower 5A: [§63.7295(b); §2103.12.h.6; IP 0052-I014a, Condition V.A.6.a]

1) The permittee shall equip the quench tower with baffles such that no more than 5 percent of the cross sectional area of the tower may be uncovered or open to the sky.
2) The permittee shall wash the baffles in the quench tower once each day that the tower is used to quench coke, except as specified in Conditions V.L.6.a.2)i) and V.L.6.a.2)ii) below:

i) The permittee is not required to wash the baffles in a quench tower if the highest measured ambient temperature remains less than 30 degrees Fahrenheit throughout that day (24-hour period). If the measured ambient temperature rises to 30 degrees Fahrenheit or more during the day, the permittee shall resume daily washing according to the schedule in the operation and maintenance plan.

ii) The permittee shall continuously record the ambient temperature on days that the baffles were not washed.

3) The permittee shall inspect the quench tower monthly for damaged or missing baffles and blockage.

4) The permittee shall initiate repair or replacement of damaged or missing baffles within 30 days and complete as soon as practicable.

b. As provided in §63.6(g), the permittee may request to use an alternative to the work practice standards in Condition V.L.6.a above. [§63.7295(c); §2103.12.h.6; IP 0052-I014a, Condition V.A.6.b]

c. The permittee shall wash the back-up quench tower baffles once each day that the quench tower is used, provided the ambient temperature is above 30ºF. [§2103.12.h.6; IP 0052-I014a, Condition V.A.6.c].

d. At no time shall the permittee operate the quench tower unless it is properly operated and maintained according to good engineering and air pollution control practices by performing regular maintenance with the exception of actions to mitigate emergency conditions. [RACT IP 0052-I020b, Condition V.E.1.b; 25 Pa Code §129.99; §2103.12.a.2.B]

e. The permittee shall be in compliance with the quench tower work practice standards in conditions V.L.6.a and V.L.6.b above, and operation and maintenance requirements of NESHAP 40 CFR 63, Subpart CCCCC at all times, except during periods of startup, shutdown, and malfunction as defined in §63.2. [RACT IP 0052-I020b, Condition V.E.1.c; 25 Pa Code §129.99; §2103.12.a.2.B]

7. Additional Requirements

None except as provided elsewhere

PERMIT SHIELD IN EFFECT

proposed

M. Quench Tower 7A: P052

Process Description:	Water quenching of incandescent coke from Batteries 19-20
Facility ID:	P052
Max. Design Rate/Units:	1,555,630 tons of coke per year
Capacity:	1,555,630 tons of coke per year
Raw Materials:	Incandescent Coke
Control Device(s):	Baffles or their approved equivalents

1. Restrictions:

a. The permittee shall not quench, or allow the quenching of, coke unless the emissions from such quenching are vented through a baffled quench tower and the water used for such quenching meets the requirements of 40 CFR Subpart CCCCC. Make-up water for quenching shall be equivalent to, or better than, the water quality standards established for the nearest stream or river by regulations promulgated by the DEP under the Pennsylvania Clean Streams Law, Act of June 22, 1937, PL. 1987, as amended, 35 P.S. 691.1 et seq., except that water from the nearest stream or river may be used for make-up water for the quenching of coke. The nearest stream or river to the U.S Steel Corporation Mon Valley Works Clairton Plant shall be the Monongahela River. Measurements of water quality shall be performed according to prcoedures established or approved by the Commonwealth. [§2105.21.g]

b. The permittee shall meet the following requirements for the quench tower and backup quench station: [§63.7295(a); §2103.12.h.6; IP 0052-I014a, Condition V.B.1.b]

1) For the quenching of hot coke, the permittee shall meet the requirements in Conditions V.M.1.b.1)A or V.M.1.b.1)B above:

A. The concentration of total dissolved solids (TDS) in the water used for quenching must not exceed 1,100 milligrams per liter (mg/L); or
B. The sum of the concentrations of benzene, benzo(a)pyrene, and naphthalene in the water used for quenching must not exceed the applicable site-specific limit approved by the Department.

2) The permittee shall use acceptable makeup water, as defined in §63.7352, as makeup water for quenching.

c. The permittee has demonstrated initial compliance with the TDS limit in Condition V.M.1.b.1)A or {§63.7295(a)(1)(i) above if the TDS concentration, as measured according to the performance test procedures in Condition V.M.2.a or {§63.7325(a)} below, does not exceed 1,100 mg/L. [§63.7326(c)(1); §2103.12.h.6; IP 0052-I014a, Condition V.B.1.c]

d. The permittee has demonstrated initial compliance with the constituent limit in Condition V.M.1.b.1)B above if: [§63.7326(c)(2); §2103.12.h.6; IP 0052-I014a, Condition V.B.1.d]

A. The permittee has established a site-specific constituent limit according to the procedures in Condition V.M.2.c below; and
B. The sum of the constituent concentrations, as measured according to the performance test procedures in Condition V.M.2.d below, is less than or equal to the site-specific limit.

proposed

e. The permittee must comply with each emission limitation, work practice standard, and operation and maintenance requirement in 40 CFR Part 63, Subpart CCCCC that applies upon initial startup. [§63.7283(c); §2103.12.h.6; IP 0052-I014a, Condition V.B.1.e]

f. The permittee shall not quench or allow the quenching of coke through the quench tower unless there is installed and maintained a double set of baffles or equivalent as approved by the Department. [§2103.12.h.6; IP 0052-I014a, Condition V.A.1.f]

g. The permittee shall not quench or allow the quenching of coke through the quench tower unless there is installed, maintained and operated a system of mist sprays below the baffles to mist the quench plume as it rises in the tower. [§2103.12.h.6; IP 0052-I014a, Condition V.A.1.g]

h. The permittee shall construct the quench tower to be greater than 150 feet in height and to have sufficient cross sectional area to ensure the flow is developed prior to entering the baffles [§2103.12.h.6; IP 0052-I014a, Condition V.A.1.g]

i. Emissions from Quench Tower 7A shall not exceed the limitations in Table V-M-1: [§2103.12.h.6; IP 0052-I014a, Condition V.B.1.f; SO_2 SIP IP 0052-I017, Condition V.B.1.c]

Table V-M-1 - Quench Tower 7A Emission Limitations

POLLUTANT	HOURLY EMISSION LIMIT (lb/hr)	ANNUAL EMISSION LIMIT (tons/year)[1]
Particulate Matter (total)	35.82	156.88
PM_{10}	34.93	152.99
$PM_{2.5}$	34.04	149.10
Sulfur Dioxides**	7.21	31.58
NO_X	0.39	1.70
Volatile Organic Compounds	25.48	111.60

[1]A year is defined as any 12 consecutive months.
**SO_2 SIP IP 0052-I017, Condition V.B.1.c.

2. Testing Requirements:

a. The permittee shall conduct performance tests to demonstrate compliance with the TDS limit or constituent limit for quench water in Condition V.M.1.b.1) above as specified in Condition V.M.1.e above. [§63.7320(b); IP 0052-I014, Condition V.B.2.a]

b. If the permittee elects the TDS limit for quench water in Condition V.M.1.b.1)A above, the permittee shall conduct each performance test according to the following conditions: [§63.7325(a); IP 0052-I014a, Condition V.B.2.b]

1) Take the quench water sample from a location that provides a representative sample of the quench water as applied to the coke (e.g., from the header that feeds water to the quench tower reservoirs). Conduct sampling under normal and representative operating conditions. §63.7325(a)(1)]

proposed

2) Determine the TDS concentration of the sample using Method 160.1 in 40 CFR part 136.3 (see "residue—filterable"), except that the permittee shall dry the total filterable residue at 103 to 105°C (degrees Centigrade) instead of 180°C. [§63.7325(a)(2)]

c. If at any time the permittee elects to meet the alternative requirements for quench water in Condition V.M.1.b.1)B above, the permittee shall establish a site-specific constituent limit according to the following procedures: [§63.7325(b); IP 0052-I014a, Condition V.B.2.c]

1) Take a minimum of nine quench water samples from a location that provides a representative sample of the quench water as applied to the coke (e.g., from the header that feeds water to the quench tower reservoirs). Conduct sampling under normal and representative operating conditions.
2) For each sample, determine the TDS concentration according to the requirements in Condition V.M.2.b.2) above and the concentration of benzene, benzo(a)pyrene, and naphthalene using the applicable methods in 40 CFR Part 136 or an approved alternative method.
3) Determine and record the highest sum of the concentrations of benzene, benzo(a)pyrene, and naphthalene in any sample that has a TDS concentration less than or equal to the TDS limit of 1,100 mg/L. This concentration is the site-specific constituent limit.
4) Submit the site-specific limit, sampling results, and all supporting data and calculations to the Department for review and approval.

d. If the permittee elects the constituent limit for quench water in Condition V.M.1.b.1)B above, the permittee shall conduct each performance test according to the following conditions: [§63.7325(c); IP 0052-I014a, Condition V.B.2.d]

1) Take a quench water sample from a location that provides a representative sample of the quench water as applied to the coke (e.g., from the header that feeds water to the quench tower reservoirs). Conduct sampling under normal and representative operating conditions.
2) Determine the sum of the concentration of benzene, benzo(a)pyrene, and naphthalene in the sample using the applicable methods in 40 CFR Part 136 or an approved alternative method.

e. The permittee shall have particulate (PM_{10} and $PM_{2.5}$), sulfur oxides and VOC emissions tests performed on the quench tower outlet according to Site Level Condition IV.14.a above and at least once every two years thereafter to demonstrate compliance with the mass emission standard in Condition V.M.1.i above. Emission tests shall be conducted according to the methodologies specified in 40 CFR 60, Appendix A or methodologies approved by the Department. The permittee shall submit a stack test protocol to the Department for approval at least 45 days prior to the test dates. The permittee shall: [§2108.02.a & e; IP 0052-I014a, Condition V.B.2.e]

1) Sample at an isokinetic rate with an isokinetic variation greater than 90% and less than 110%;
2) Sample for the duration of each quench for a total of 30 quenches per test run;
3) Perform each test run for at least 60 minutes in duration and have a minimum sample volume of 50 dscf;
4) Include sample example calculations;
5) The test report shall include the test results in terms of lbs/hr and lbs/ton coke quenched.

f. The Department reserves the right to require additional emissions testing sufficient to assure compliance with the terms and conditions of this permit. Such testing shall be performed in accordance with Article XXI §2108.02. [§2103.12.h.1]

proposed

3. Monitoring Requirements:

a. Beginning on the first day compliance is required under Conditions V.M.1.e above, the permittee shall demonstrate continuous compliance with the TDS limit for quenching in Condition V.M.1.b.1)A above by meeting the following requirements: [§63.7333(f); §2103.12.i; IP 0052-I014a, Condition V.B.3.a]

1) Maintaining the TDS content of the water used to quench hot coke at 1,100 mg/L or less; and
2) Determining the TDS content of the quench water at least weekly according to the requirements in Condition V.M.2.b above and recording the sample results.

b. Beginning on the first day compliance is required under Conditions V.M.1.e above, the permittee shall demonstrate continuous compliance with the constituent limit for quenching in Condition V.M.1.b.1)B above by meeting the following requirements: [§63.7333(g); §2103.12.i; IP 0052-I014a, Condition V.B.3.b]

1) Maintaining the sum of the concentrations of benzene, benzo(a)pyrene, and naphthalene in the water used to quench hot coke at levels less than or equal to the site-specific limit approved by the Department; and

2) Determining the sum of the constituent concentrations at least monthly according to the requirements in Condition V.M.2.d above and recording the sample results.

4. Record Keeping Requirements:

a. For each work practice standard for quenching in Condition V.M.6.a below, the permittee shall demonstrate continuous compliance according to the following requirements: [§63.7334(e); §2103.12.j; IP 0052-I014a, Condition V.B.4.a]

1) Maintaining records that document that the quench tower is equipped with baffles such that no more than 5 percent of the cross-sectional area of the tower is uncovered or open to the sky as required in Condition V.M.6.a.1) below;
2) Maintaining records that document conformance with the washing, inspection, and repair requirements in Conditions V.M.6.a.2) and V.M.6.c below, including records of the ambient temperature on any day that the baffles were not washed; and
3) Maintaining records of the source of makeup water to document conformance with the requirement for acceptable makeup water in Condition V.M.1.b.2) above.

5. Reporting Requirements:

a. The permittee has demonstrated initial compliance with the work practice standards for quenching in Condition V.M.6.a below if the permittee certifies in the notification of compliance status that the following requirements have been met: [§63.7327(e); §2103.12.k; IP 0052-I014a, Condition V.B.5.a]

1) The permittee has installed the required equipment in the quench tower; and
2) The permittee will meet each of the work practice requirements beginning no later than the compliance date that is specified in Condition V.M.1.e above.

proposed

b. The permittee shall submit a notification of compliance status containing the results of the quench water performance test (TDS or constituent limit) according to Condition V.M.5.c. [§63.7326(d); §2103.12.k; IP 0052-I014a, Condition V.B.5.b]

c. The permittee shall submit a notification of compliance status according to §63.9(h)(2)(ii) if a performance test, opacity observation, or other initial compliance demonstration is required to be conducted. [§63.7340(e); §2103.12.k; IP 0052-I014, Condition V.B.5.c]

1) For each initial compliance demonstration that does not include a performance test, the permittee shall submit the notification of compliance status before the close of business on the 30th calendar day following the completion of the initial compliance demonstration.
2) For each initial compliance demonstration that does include a performance test, the permittee shall submit the notification of compliance status, including the performance test results, before the close of business on the 60th calendar day following completion of the performance test according to §63.10(d)(2).

d. *Semiannual compliance report contents.* Each compliance report must provide information on compliance with the emission limitations, work practice standards, and operation and maintenance requirements for the quench tower. The reports must include the information in Conditions V.M.5.d.1) through V.M.5.d.3) below, and as applicable, Conditions V.M.5.d.4) through V.M.5.d.6) below. §[63.7341(c); §2103.12.k; IP 0052-I014a, Condition V.B.5.d]

1) Company name and address.
2) Statement by a responsible official, with the official's name, title, and signature, certifying the truth, accuracy, and completeness of the content of the report.
3) Date of report and beginning and ending dates of the reporting period.
4) If the permittee had a startup, shutdown, or malfunction during the reporting period and took actions consistent with the startup, shutdown, and malfunction plan, the compliance report must include the information in §63.10(d)(5)(i).
5) If there were no deviations from the continuous compliance requirements in Conditions V.M.3.a, V.M.3.b, and V.M.4.a above (for the quench tower), a statement that there were no deviations from the emission limitations, work practice standards, or operation and maintenance requirements during the reporting period.
6) For each deviation from an emission limitation in 40 CFR 63, Subpart CCCCC (including quench water limits) and for each deviation from the requirements for work practice standards in 40 CFR 63, Subpart CCCCC that occurs at the quench tower, the compliance report must contain the information in Conditions V.M.5.d.4) and V.M.5.d.6). This includes periods of startup, shutdown, and malfunction.

A. The total operating time of the quench tower during the reporting period.
B. Information on the number, duration, and cause of deviations (including unknown cause, if applicable) as applicable and the corrective action taken.

e. The permittee shall report 12-month rolling total emissions using the results of the most recent emissions test in accordance with General Condition III.15.d above. [§2102.04.b.4; IP 0052-I014a, Condition V.A.5.e]

f. Reporting instances of non-compliance in accordance with the Startup Shutdown Malfunction Plan, does not relieve the permittee of the requirement to report breakdowns in accordance with Site Level Condition IV.9 above, if appropriate. (§2103.12.h.6)

proposed

6. Work Practice Standard:

a. The permittee shall meet each of the following requirements for Quench Tower 7A: [§63.7295(b); §2103.12.h.6; IP 0052-I014a, Condition V.B.6.a]

1) The permittee shall equip the quench tower with baffles such that no more than 5 percent of the cross-sectional area of the tower may be uncovered or open to the sky.
2) The permittee shall wash the baffles in the quench tower once each day that the tower is used to quench coke, except as specified in Conditions V.M.6.a.2)A and V.M.6.a.2)B below:

A. The permittee is not required to wash the baffles in a quench tower if the highest measured ambient temperature remains less than 30 degrees Fahrenheit throughout that day (24-hour period). If the measured ambient temperature rises to 30 degrees Fahrenheit or more during the day, the permittee shall resume daily washing according to the schedule in the operation and maintenance plan.
B. The permittee shall continuously record the ambient temperature on days that the baffles were not washed.

3) The permittee shall inspect the quench tower monthly for damaged or missing baffles and blockage.
4) The permittee shall initiate repair or replacement of damaged or missing baffles within 30 days and complete as soon as practicable.

b. As provided in §63.6(g), the permittee may request to use an alternative to the work practice standards in Condition V.M.6.a above. [§63.7295(c); §2103.12.h.6; IP 0052-I014, Condition V.B.6.b]

c. The permittee shall wash the back-up quench tower baffles once each day that the quench tower is used, provided the ambient temperature is above 30ºF. [§2103.12.h.6; IP 0052-I014, Condition V.B.6.c].

d. At no time shall the permittee operate the quench tower unless it is properly operated and maintained according to good engineering and air pollution control practices by performing regular maintenance with the exception of actions to mitigate emergency conditions. [RACT IP 0052-I020b, Condition V.E.1.b; 25 Pa Code §129.99; §2103.12.a.2.B]

e. The permittee shall be in compliance with the quench tower work practice standards in conditions V.M.6.a and V.M.6.b above, and operation and maintenance requirements of NESHAP 40 CFR 63, Subpart CCCCC at all times, except during periods of startup, shutdown, and malfunction as defined in §63.2. [RACT IP 0052-I020b, Condition V.E.1.c; 25 Pa Code §129.99; §2103.12..a.2.B]

7. Additional Requirements

None except as provided elsewhere

PERMIT SHIELD IN EFFECT

proposed

N. Alternate Quench Towers No. 5 and 7: P015 and P016

Process Description: Backup water quenching of incandescent coke from Batteries No. 13-15 and 19-20
Facility ID'S: P015 and P016
Raw Materials: Incandescent coke, water
Control Device: Baffles installed in the quench towers to capture entrained water droplets

1. Restrictions:

a. The permittee shall not quench, or allow the quenching of, coke unless the emissions from such quenching are vented through a baffled quench tower and the water used for such quenching meets the requirements of 40 CFR Subpart CCCCC. Make-up water for quenching shall be equivalent to, or better than, the water quality standards established for the nearest stream or river by regulations promulgated by the DEP under the Pennsylvania Clean Streams Law, Act of June 22, 1937, PL. 1987, as amended, 35 P.S. 691.1 et seq., except that water from the nearest stream or river may be used for make-up water for the quenching of coke. The nearest stream or river to the U.S Steel Corporation Mon Valley Works Clairton Plant shall be the Monongahela River. Measurements of water quality shall be performed according to prcoedures established or approved by the Commonwealth. [§2105.21.g]

b. The permittee shall meet the following requirements for each quench tower and backup quench station: [§2103.12.h.6; §63.7295(a)]

1) For the quenching of hot coke, the permittee shall meet one of the following requirements: [§2103.12.h.6; §63.7295(a)(1)]

A. The concentration of total dissolved solids (TDS) in the water used for quenching must not exceed 1,100 milligrams per liter (mg/L); or
B. The sum of the concentrations of benzene, benzo (a) pyrene, and naphthalene in the water used for quenching must not exceed the applicable site-specific limit approved by the Department.

2) The permittee shall use acceptable makeup water, as defined in §63.7352, for quenching [§2103.12.h.6; §63.7295(a)(2)].

c. For each by-product coke oven batteries subject to the requirements for quench water in V.N.1.b.1) above, the permittee shall submit a notification of compliance status containing the results of the quench water performance test (TDS or constituent limit) before the close of business on the 30th calendar days following the completion of the compliance demonstration. For each particulate matter emission limitation that applies, the permittee shall submit a notification of compliance status containing the results of the performance test before the close of business on the 60th calendar days following completion of the performance test according to §63.10(d)(2). [§2103.12.h.6; §63.7326(d)]

proposed

d. Emissions from Quench Tower No. 5 shall not exceed the limitations in Table V-N-1: [§2103.12.h.6]

Table V-N-1 - Quench Tower No. 5 Emission Limitations

POLLUTANT	HOURLY EMISSION LIMIT (lb/hr)	ANNUAL EMISSION LIMIT (tons/year)[1]
Particulate Matter (total)	5.61	24.56
PM_{10}	3.36	14.73
$PM_{2.5}$	2.80	12.28
PM-condensable	2.06	9.0
NO_X	0.43	1.88
Sulfur Dioxides	1.01	4.42
Volatile Organic Compounds	2.09	9.17

[1]A year is defined as any 12 consecutive months.

e. Emissions from Quench Tower No. 7 shall not exceed the limitations in Table V-N-2: [§2103.12.h.6]

Table V-N-2 - Quench Tower No 7 Emission Limitations

POLLUTANT	HOURLY EMISSION LIMIT (lb/hr)	ANNUAL EMISSION LIMIT (tons/year)[1]
Particulate Matter (total)	15.10	66.15
PM_{10}	9.06	39.70
$PM_{2.5}$	7.55	33.08
PM-condensable	6.57	28.77
NO_X	0.39	1.70
Sulfur Dioxides	0.66	2.91
Volatile Organic Compounds	3.16	13.83

[1]A year is defined as any 12 consecutive months.

2. Testing Requirements:

a. The permittee shall conduct performance tests to demonstrate compliance with the TDS limit or constituent limit for quench water in §63.7295(a)(1) by April 14, 2006 [§2103.12.h.6; §63.7320(b); §63.7283(a)]

b. If the permittee elects the TDS limit for quench water in V.N.1.b.1) above, the permittee shall conduct each performance test according to the following conditions: [§2103.12.h.6; §63.7325(a)]

1) Take the quench water sample from a location that provides a representative sample of the quench water as applied to the coke (e.g., from the header that feeds water to the quench tower

reservoirs). Conduct sampling under normal and representative operating conditions.

2) Determine the TDS concentration of the sample using Method 160.1 in 40 CFR Part 136.3 (see "residue—filterable"), except that the permittee must dry the total filterable residue at 103 to 105 [deg] C (degrees Centigrade) instead of 180 [deg] C.

c. If at any time the permittee elects to meet the alternative requirements for quench water in V.N.1.b.1) above, the permittee shall establish a site-specific constituent limit according to the procedures in Conditions V.N.2.c.1) through V.N.2.c.4) below: [§2103.12.h.6; §63.7325(b)]

1) Take a minimum of nine quench water samples from a location that provides a representative sample of the quench water as applied to the coke (e.g., from the header that feeds water to the quench tower reservoirs). Conduct sampling under normal and representative operating conditions.
2) For each sample, determine the TDS concentration according to the requirements in Condition V.N.2.b above, and the concentration of benzene, benzo(a)pyrene, and naphthalene using the applicable methods in 40 CFR Part 136 or an approved alternative method.
3) Determine and record the highest sum of the concentrations of benzene, benzo(a)pyrene, and naphthalene in any sample that has a TDS concentration less than or equal to the TDS limit of 1,100 mg/L. This concentration is the site-specific constituent limit.
4) Submit the site-specific limit, sampling results, and all supporting data and calculations to Department for review and approval.

d. If the permittee elects the constituent limit for quench water in V.N.1.b.1)B, the permittee shall conduct each performance test according to the conditions in Conditions V.N.2.d.1) and V.N.2.d.2) below: [§2103.12.h.6; §63.7325(c)]

1) Take a quench water sample from a location that provides a representative sample of the quench water as applied to the coke (e.g., from the header that feeds water to the quench tower reservoirs). Conduct sampling under normal and representative operating conditions.
2) Determine the sum of the concentration of benzene, benzo(a)pyrene, and naphthalene in the sample using the applicable methods in 40 CFR Part 136 or an approved alternative method

e. The permittee shall have particulate (PM_{10} and $PM_{2.5}$), sulfur oxides (SOx) and VOC emissions tests performed on the quench tower outlet according to Site Level Condition IV.14.a above and at least once every four years thereafter to demonstrate compliance with the mass emission standard in Conditions V.N.1.d aboveand V.N.1.e above. Emission tests shall be conducted according to the methodologies specified in 40 CFR 60, Appendix A or methodologies approved by the Department. The permittee shall submit a stack test protocol to the Department for approval at least 45 days prior to the test dates. The permittee shall: [§2108.02.a & e]

1) Sample at an isokinetic rate with an isokinetic variation greater than 90% and less than 110%;
2) Sample for the duration of each quench for a total of 30 quenches per test run;
3) Perform each test run for at least 60 minutes in duration and have a minimum sample volume of 50 dscf;
4) Include sample example calculations;
5) The test report shall include the test results in terms of lbs/hr and lbs/ton coke quenched.

f. The Department reserves the right to require additional emissions testing sufficient to assure

proposed

compliance with the terms and conditions of this permit. Such testing shall be performed in accordance with Site Level Condition IV.14 above and Article XXI §2108.02. [§2103.12.h.1]

3. Monitoring Requirements:

a. The permittee shall inspect the quench tower monthly for damaged or missing baffles and blockage and initiate repair or replacement of damaged or missing baffles within 30 days and complete as soon as practicable. [§2103.12.i]

b. Beginning on the first day compliance is required under §63.7283, the permittee shall demonstrate continuous compliance with the TDS limit for quenching in §63.7295(a)(1)(i) by meeting the requirements in Conditions V.N.3.b.1) and V.N.3.b.2): [§2103.12.h.6; §63.7333(f)]

1) Maintaining the TDS content of the water used to quench hot coke at 1,100 mg/L or less; and
2) Determining the TDS content of the quench water at least weekly according to the requirements in Condition V.N.2.b and recording the sample results.

c. The permittee shall demonstrate continuous compliance with the constituent limit for quenching in Condition V.N.1.b.1)B by meeting the following requirements: [§63.7333(g)]

1) Maintaining the sum of the concentrations of benzene, benzo(a)pyrene, and naphthalene in the water used to quench hot coke at levels less than or equal to the site-specific limit approved by the Department; and
2) Determining the sum of the constituent concentrations at least monthly according to the requirements in §63.7325(c) and recording the sample results.

4. Record Keeping Requirements:

a. The permittee shall maintain records of all quench tower inspections when missing or damaged baffles or blockages are discovered. [§2103.12.j]

b. The permittee shall maintain records of all repairs or replacement of baffles. The record keeping shall include a description of the repair or replacement, the date repairs and/or replacements were initiated and the date repairs and/or replacements were completed. [§2103.12.j]

c. The permittee shall keep the records required in Conditions V.N.3.a and V.N.3.b above to show continuous compliance with each emission limitation, work practice standard, and operation and maintenance requirement that applies. [§2103.12.j; §2103.12.h.6; §63.7342(d)]

d. The permittee shall keep records in a form suitable and readily available for expeditious review, according to §63.10(b)(1). [§2103.12.j; §2103.12.h.6; §63.7343(a)]

5. Reporting Requirements:

a. At least every six (6) months, the permittee shall submit semiannual reports to the Department in accordance General Condition III.15.d above of the record keeping information required in Conditions V.N.4.a and V.N.4.b above. [§2103.12.k]

b. The permittee must submit semiannual compliance reports for the quench towers to the Department in accordance with General Condition III.15 above. [§2103.12.k; §2103.12.h.6; §63.7341(a)]

proposed

c. *Semiannual compliance report contents.* Each compliance report must provide information on compliance with the emission limitations, work practice standards, and operation and maintenance requirements for the quench tower. The reports must include the information in Conditions V.N.5.c.1) through V.N.5.c.3) below, and as applicable, Conditions V.N.5.c.4) through V.N.5.c.6) below. [§63.7341(c)]

1) Company name and address.
2) Statement by a responsible official, with the official's name, title, and signature, certifying the truth, accuracy, and completeness of the content of the report.
3) Date of report and beginning and ending dates of the reporting period.
4) If the permittee had a startup, shutdown, or malfunction during the reporting period and took actions consistent with the startup, shutdown, and malfunction plan, the compliance report must include the information in §63.10(d)(5)(i).
5) If there were no deviations from the continuous compliance requirements in Conditions V.N.3.b and V.N.3.c above (for the quench tower), a statement that there were no deviations from the emission limitations, work practice standards, or operation and maintenance requirements during the reporting period.
6) For each deviation from an emission limitation in 40 CFR 63, Subpart CCCCC (including quench water limits) and for each deviation from the requirements for work practice standards in 40 CFR 63, Subpart CCCCC that occurs at the quench tower, the compliance report must contain the information in Conditions V.N.5.c.4) and V.N.5.c.6)A through V.N.5.c.6)B. This includes periods of startup, shutdown, and malfunction.

   A. The total operating time of the quench tower during the reporting period.
   B. Information on the number, duration, and cause of deviations (including unknown cause, if applicable) as applicable and the corrective action taken.

6. Work Practice Standards:

At no time shall the permittee operate the following quench towers at the facility unless they are properly operated and maintained according to good engineering and air pollution control practices by performing regular maintenance with the exception of actions to mitigate emergency conditions. [RACT IP 0052-I020b, V.E.1.b; 25 Pa Code §129.99; §2103.12.a.2.B]

7. Additional Requirements

None except as provided elsewhere

PERMIT SHIELD IN EFFECT

proposed

O. Quench Tower C: P047

Process Description:	Water quenching of incandescent coke
Facility ID:	P047
Max. Design Rate/Units:	1,379,059 tons of coal per year
Capacity:	1,107,384 tons of coke per year
Raw Materials:	Incandescent Coke
Control Device(s):	Two sets of Kiro-Nathaus baffles or their approved equivalents

1. Restrictions

a. The permittee shall not quench, or allow the quenching of, coke unless the emissions from such quenching are vented through a baffled quench tower and the water used for such quenching meets the requirements of 40 CFR Subpart CCCCC. Make-up water for quenching shall be equivalent to, or better than, the water quality standards established for the nearest stream or river by regulations promulgated by the DEP under the Pennsylvania Clean Streams Law, Act of June 22, 1937, PL. 1987, as amended, 35 P.S. 691.1 et seq., except that water from the nearest stream or river may be used for make-up water for the quenching of coke. The nearest stream or river to the U.S Steel Corporation Mon Valley Works Clairton Plant shall be the Monongahela River. Measurements of water quality shall be performed according to prcoedures established or approved by the Commonwealth. [§2105.21.g]

b. The permittee shall meet the following requirements for each quench tower and backup quench station: [§63.7295(a); §2103.12.h.6; IP 0052-I011b, Condition V.B.1.b]

1) For the quenching of hot coke, the permittee shall meet the following requirements:
   A. The concentration of total dissolved solids (TDS) in the water used for quenching must not exceed 1,100 milligrams per liter (mg/L); or
   B. The sum of the concentrations of benzene, benzo(a)pyrene, and naphthalene in the water used for quenching must not exceed the applicable site-specific limit approved by the Department.
2) The permittee shall use acceptable makeup water, as defined in §63.7352, as makeup water for quenching.

c. The permittee has demonstrated initial compliance with the TDS limit in Condition V.O.1.b.1) above if the TDS concentration, as measured according to the performance test procedures in ConditionV.O.2.b below, does not exceed 1,100 mg/L. [§63.7326(c)(1); §2103.12.h.6; IP 0052-I011b, Condition V.B.1.c]

d. The permittee has demonstrated initial compliance with the constituent limit in Condition V.O.1.b.1)B above if: [§63.7326(c)(2)]
   A. The permittee has established a site-specific constituent limit according to the procedures in Conditon V.O.2.c below; and
   B. The sum of the constituent concentrations, as measured according to the performance test procedures in Condition V.O.2.d below, is less than or equal to the site-specific limit.

proposed

e. Emissions from the Battery C Quench Tower shall not exceed the limitations in Table V-O-1: [§2103.12.g; IP 0052-I011b, Condition V.B.1.e; SO_2 SIP IP 0052-I017, Condition V.B.1.c]

Table V-O-1 - C Battery Quench Tower Emission Limitations

POLLUTANT	HOURLY EMISSION LIMIT (lb/hr	ANNUAL EMISSION LIMIT (tons/year)*
Particulate Matter	24.7	108.3
PM_{10}	24.1	105.5
$PM_{2.5}$	23.7	103.8
Sulfur Dioxides**	5.0	21.90
Volatile Organic Compounds	10	44
Total Reduced Sulfur	34	148.90
Cyanide Compounds	0.3	1.3

*A year is defined as any 12 consecutive months.
**SO_2 SIP IP 0052-I017, Condition V.B.1.c.

2. Testing Requirements

a. The permittee shall conduct performance tests to demonstrate compliance with the TDS limit or constituent limit for quench water in Condition V.O.1.b.1) above by the compliance date that is specified in Condition V.I.1.v above. [§63.7320(b) §2103.12.h.1; IP 0052-I011b, Condition V.B.2.a]

b. If the permittee elects the TDS limit for quench water in Condition V.O.1.b.1)A above the permittee shall conduct each performance test according to the following conditions: [§63.7325(a); §2103.12.h.6; IP 0052-I011b, Condition V.B.2.b]

1) Take the quench water sample from a location that provides a representative sample of the quench water as applied to the coke (e.g., from the header that feeds water to the quench tower reservoirs). Conduct sampling under normal and representative operating conditions. [§63.7325(a)(1)]
2) Determine the TDS concentration of the sample using Method 160.1 in 40 CFR part 136.3 (see "residue—filterable"), except that the permittee shall dry the total filterable residue at 103 to 105 °C (degrees Centigrade) instead of 180 °C. [§63.7325(a)(2)]

c. If at any time the permittee elects to meet the alternative requirements for quench water in Condition V.O.1.b.1)B above the permittee shall establish a site-specific constituent limit according to the following procedures: [§63.7325(b); §2103.12.h.1; IP 0052-I011b, Condition V.B.2.c]

1) Take a minimum of nine quench water samples from a location that provides a representative sample of the quench water as applied to the coke (e.g., from the header that feeds water to the quench tower reservoirs). Conduct sampling under normal and representative operating conditions.

proposed

2) For each sample, determine the TDS concentration according to the requirements in Condition V.O.2.b.2) above and the concentration of benzene, benzo(a)pyrene, and naphthalene using the applicable methods in 40 CFR Part 136 or an approved alternative method.
3) Determine and record the highest sum of the concentrations of benzene, benzo(a)pyrene, and naphthalene in any sample that has a TDS concentration less than or equal to the TDS limit of 1,100 mg/L. This concentration is the site-specific constituent limit.
4) Submit the site-specific limit, sampling results, and all supporting data and calculations to the Department for review and approval.

d. If the permittee elects the constituent limit for quench water in Condition V.O.1.b.1)B above, the permittee shall conduct each performance test according to the following conditions: [§63.7325(c); §2103.12.h.1; IP 0052-I011b, Condition V.B.2.d]

1) Take a quench water sample from a location that provides a representative sample of the quench water as applied to the coke (e.g., from the header that feeds water to the quench tower reservoirs). Conduct sampling under normal and representative operating conditions.
2) Determine the sum of the concentration of benzene, benzo(a)pyrene, and naphthalene in the sample using the applicable methods in 40 CFR Part 136 or an approved alternative method.

e. The permittee shall have particulate (PM_{10} and $PM_{2.5}$), sulfur oxides and VOC emissions tests performed on the C Battery quench tower outlet according to Site Level Condition IV.14.a above and at least once every two years thereafter to demonstrate compliance with the mass emission standard in Condition V.O.1.e above. Emission tests shall be conducted according to the methodologies specified in 40 CFR 60, Appendix A or methodologies approved by the Department. The permittee shall submit a stack test protocol to the Department for approval at least 45 days prior to the test dates [§2108.02.b & .e]

f. The Department reserves the right to require additional emissions testing sufficient to assure compliance with the terms and conditions of this permit. Such testing shall be performed in accordance with Article XXI §2108.02. [§2103.12.h.1]

3. Monitoring Requirements:

a. Beginning on the first day compliance is required under Conditions V.I.1.v and V.I.1.w above, the permittee shall demonstrate continuous compliance with the TDS limit for quenching in Condition V.O.1.b.1)A above by meeting the following requirements: [63.7333(f); §2103.12.h.6; §2103.12.i; IP 0052-I011b, Condition V.B.3.a]

1) Maintaining the TDS content of the water used to quench hot coke at 1,100 mg/L or less; and
2) Determining the TDS content of the quench water at least weekly according to the requirements in Condition V.O.2.b above and recording the sample results.

b. Beginning on the first day compliance is required under Conditions V.I.1.v and V.I.1.w above, the permittee shall demonstrate continuous compliance with the constituent limit for quenching in Condition V.O.2.b.2) above by meeting the following requirements: [§63.7333(g); §2103.12.h.6; §2103.12.i; IP 0052-I011b, Condition V.B.3.b]
1) Maintaining the sum of the concentrations of benzene, benzo(a)pyrene, and naphthalene in the water used to quench hot coke at levels less than or equal to the site-specific limit approved by the Department; and

proposed

2) Determining the sum of the constituent concentrations at least monthly according to the requirements in Condition V.O.2.d above and recording the sample results.

4. Record Keeping Requirements:

a. The permittee shall demonstrate continuous compliance according to the following requirements: [§63.7334(e); §2103.12.j; IP 0052-I011b, Condition V.B.4.a]

1) Maintaining baffles in each quench tower such that no more than 5 percent of the cross-sectional area of the tower is uncovered or open to the sky as required in Condition V.O.6.a.1) below;
2) Maintaining records that document conformance with the washing, inspection, and repair requirements in Condition V.O.6.a.2) below, including records of the ambient temperature on any day that the baffles were not washed; and
3) Maintaining records of the source of makeup water to document conformance with the requirement for acceptable makeup water in Condition V.O.1.b.2) above.

5. Reporting Requirements:

a. For each coke oven battery, the permittee has demonstrated initial compliance with the work practice standards for quenching in Condition V.O.6.a below if the permittee certifies in the notification of compliance status that the following requirements have been met: [§63.7327(e); §2103.12.k; IP 0052-I011b, Condition V.B.5.a]

1) The permittee has installed the required equipment in each quench tower; and
2) The permittee will meet each of the work practice requirements beginning no later than the compliance date that is specified in Conditions V.I.1.v and V.I.1.w above. [§63.7283]

b. The permittee shall submit a notification of compliance status containing the results of the quench water performance test (TDS or constituent limit) according to Condition V.O.5.d below [§63.7326(d); §2103.12.k; IP 0052-I011b, Condition V.B.5.b]

c. The permittee shall submit a notification of compliance status according to the requirements in Condition V.I.5.p.1) above. [§63.7327(f); §2103.12.k; IP 0052-I011b, Condition V.B.5.c]

d. The permittee shall submit a notification of compliance status according to §63.9(h)(2)(ii) if a performance test, opacity observation, or other initial compliance demonstration is required to be conducted. [§63.7340(e); §2103.12.k; IP 0052-I011b, Condition V.B.5.d]

1) For each initial compliance demonstration that does not include a performance test, the permittee shall submit the notification of compliance status before the close of business on the 30th calendar day following the completion of the initial compliance demonstration.
2) For each initial compliance demonstration that does include a performance test, the permittee shall submit the notification of compliance status, including the performance test results, before the close of business on the 60th calendar day following completion of the performance test according to §63.10(d)(2).

e. *Semiannual compliance report contents.* Each compliance report must provide information on compliance with the emission limitations, work practice standards, and operation and maintenance

proposed

requirements for the quench tower. The reports must include the following information: [§63.7341(c); §2103.12.k; IP 0052-I011b, Condition V.B.5.e]

1) Company name and address.
2) Statement by a responsible official, with the official's name, title, and signature, certifying the truth, accuracy, and completeness of the content of the report.
3) Date of report and beginning and ending dates of the reporting period.
4) If the permittee had a startup, shutdown, or malfunction during the reporting period and took actions consistent with the startup, shutdown, and malfunction plan, the compliance report must include the information in §63.10(d)(5)(i).
5) If there were no deviations from the continuous compliance requirements in Conditions V.O.3.a and V.O.3.b above and V.O.4.a above (for the quench tower), a statement that there were no deviations from the emission limitations, work practice standards, or operation and maintenance requirements during the reporting period.
6) For each deviation from an emission limitation in 40 CFR 63, Subpart CCCCC (including quench water limits) and for each deviation from the requirements for work practice standards in 40 CFR 63, Subpart CCCCC that occurs at the quench tower, the compliance report must contain the following information. This includes periods of startup, shutdown, and malfunction.
   A. The total operating time of the quench tower during the reporting period.
   B. Information on the number, duration, and cause of deviations (including unknown cause, if applicable) as applicable and the corrective action taken.

f. Reporting instances of non-compliance in accordance with the Startup Shutdown Malfunction Plan, does not relieve the permittee of the requirement to report breakdowns in accordance with Site Level Condition IV.9 above, if appropriate. [§2103.12.k]

6. Work Practice Standard:

a. For each quench tower and each backup quench station, the permittee shall meet each of the following requirements: [§63.7295(b); §2103.12.h.6; IP 0052-I011b, Condition V.B.6.a]

1) The permittee shall equip each quench tower with baffles such that no more than 5 percent of the cross sectional area of the tower may be uncovered or open to the sky.
2) The permittee shall wash the baffles in each quench tower once each day that the tower is used to quench coke, except as specified below:
   i) The permittee is not required to wash the baffles in a quench tower if the highest measured ambient temperature remains less than 30 degrees Fahrenheit throughout that day (24-hour period). If the measured ambient temperature rises to 30 degrees Fahrenheit or more during the day, the permittee shall resume daily washing according to the schedule in the operation and maintenance plan.
   ii) The permittee shall continuously record the ambient temperature on days that the baffles were not washed.
3) The permittee shall inspect each quench tower monthly for damaged or missing baffles and blockage.
4) The permittee shall initiate repair or replacement of damaged or missing baffles within 30 days and complete as soon as practicable.

b. As provided in §63.6(g), the permittee may request to use an alternative to the work practice standards in Condition V.O.6.a above. [§63.7295(c); §2103.12.h.6; IP 0052-I011b, Condition V.B.6.b]

proposed

c. At no time shall the permittee operate quench tower C at the facility unless it is properly operated and maintained according to good engineering and air pollution control practices by performing regular maintenance with the exception of actions to mitigate emergency conditions. [RACT IP 0052-I020b, Condition V.E. 1.b; 25 Pa Code §129.99; §2103.12.a.2.B]

d. The permittee shall be in compliance with the quench tower work practice standards in conditions and V.O.6.a and V.O.6.b above, and operation and maintenance requirements of NESHAP 40 CFR 63, Subpart CCCCC at all times, except during periods of startup, shutdown, and malfunction as defined in §63.2. [RACT IP 0052-I020b, Condition V.E.1.c; 25 Pa Code §129.99; §2103.12.a.2.B]

7. Additional Requirements

None except as provided elsewhere

PERMIT SHIELD IN EFFECT

proposed

P. Desulfurization Plant: P019

Process Description: Removes sulfur compounds from the coke oven gas after processing the gas in the by-products plant. The plant consists of a Vacuum Carbonate Unit, two Claus Plants, a SCOT Plant and an HCN Destruct Unit
Facility ID: P019
Max. Design Rate: 6,394,800 tons of coke per year
Capacity: 6,394,800 tons of coke per year
Raw Materials: Coke oven tail gas
Control Device: Afterburner

1. Restrictions:

a. The SCOT Plant incinerator shall be properly maintained and operated according to good engineering and air pollution control practices at all times. [§2105.06, RACT Plan 234]

b. The permittee shall not operate, or allow to be operated, the desulfurization plant in such manner that the opacity of visible emissions from a flue or process fugitive emissions from the desulfurization plant, excluding uncombined water: [§2104.01.a]

1) Equal or exceed an opacity of 20% for a period or periods aggregating more than three (3) minutes in any sixty (60) minute period; or,
2) Equal or exceed an opacity of 60% at any time.

c. The permittee shall, at all times: [Enforcement Order No. 200, November 18, 1994]

1) Properly maintain two Claus Plants at the coke oven gas desulfurization facility. Each Claus Plant shall be capable of independently processing all of the coke oven gas produced by the coke plant at full production.
2) Operate one Claus Plant when coke oven gas is being produced.
3) Have its second Claus Plant ready for start-up and operation when a breakdown of the first Claus Plant occurs, except when the second Claus Plant is down for repairs, maintenance or modification. All repairs, maintenance and modifications to Claus Plants shall be made as expeditiously as practicable. The second Claus Plant shall start up and be fully operational within 18 hours of each breakdown on the first Claus Plant if the plant production is below 7,500 tons of coke per day at the time of the breakdown, or within 30 minutes of each such breakdown if the production is 7500 tons of coke per day or greater.

d. The permittee shall: [Enforcement Order No. 200, November 18, 1994]

1) Operate and maintain an HCN (hydrogen cyanide) Destruct Unit at all times that coke oven gas is being produced.
2) Have two catalytic reactors in the HCN Destruct Unit, each of which is capable of independently processing all of the feed gas to the HCN Destruct Unit when the coke plant is operating at full production. The second catalytic reactor shall be ready for immediate operation at all times except when the second catalytic reactor is down for repairs. All repairs to catalytic reactors shall be made as expeditiously as practicable.

proposed

e. The permittee shall: [Enforcement Order No. 200, November 18, 1994]

1) Operate and maintain a Vacuum Carbonate Unit at all times that coke oven gas is being produced at the Clairton Works.
2) Have two absorber columns in the Vacuum Carbonate Unit, each of which is capable of independently processing all of the gas flow through the Vacuum Carbonate Unit when the coke plant is operating at full production.
3) Have two Axi compressors in the Vacuum Carbonate Unit, each of which is capable of independently processing all of the acid gases generated at the Vacuum Carbonate Unit when the coke plant is operating at full production.
4) Operate one absorber column and one Axi compressor at all times when coke oven gas is being produced.
5) Have its second absorber column and its second Axi compressor in the Vacuum Carbonate Unit ready at all times for operation within two hours except when the second absorber column or second Axi compressor is down for repairs, maintenance or modifications, or when there is a sudden, unexpected failure of a primary unit(s). If there is a sudden, unexpected failure of the primary absorber column or the primary Axi compressor, the secondary unit(s) shall be operational within eight hours of such failure(s). All repairs, maintenance and modifications to absorber columns and the Axi compressors shall be made as expeditiously as practicable.

f. The permittee shall: [Enforcement Order No. 200, November 18, 1994]

1) At all times, properly maintain two strippers in the Vacuum Carbonate Unit at the coke oven gas desulfurization facility.
2) Insure that each stripper shall be capable of independently processing all of the solution from the absorber column.
3) Operate one stripper in its Vacuum Carbonate Unit at all times when coke oven gas is being produced.
4) At all times, have its second stripper ready for operation within three (3) hours except when the second stripper is down for repairs, maintenance or modification. All repairs, maintenance and modifications to the strippers shall be made as expeditiously as practicable.

g. The permittee shall, at all times: [Enforcement Order No. 200, November 18, 1994]

1) Maintain in good working order spare heat exchangers in the Vacuum Carbonate Units at the Clairton Works coke oven gas desulfurization facility as set forth below:

Listing of Critical Heat Exchangers and Spare Heat Exchangers For the Vacuum Carbonate Unit at the Clairton Works Coke Oven Gas Desulfurization Facility

Unit
a. 100 Vacuum Carbonate Units Carbonate Reboiler
b. Process Water Cooler
c. Carbonate Solution Heat Exchanger
d. 600 Vacuum Carbonate Units

proposed

Carbonate Reboiler

e. Carbonate Solution Heat Exchanger

f. Process Water Cooler

g. For Both 100 and 600 Vacuum Carbonate Units
Vacuum Pump After-cooler

2) Maintain in good working order spare pumps in the Vacuum Carbonate Units at the coke oven gas desulfurization facility as appropriate:

Listing of Critical Pumps and Spare Pumps For the Vacuum Carbonate Units at the Clairton Works Coke Oven Gas Desulfurization Facility

Unit

a. 100 Vacuum Carbonate Units
Compressor Lube Oil

b. Turbine Lube Oil

c. Lean Carbonate Solution

d. Direct Condenser

e. Rich Carbonate Solution

f. 600 Vacuum Carbonate Units

g. Rich Solution

h. Lean Carbonate Solution

i. Direct Condenser Water

j. Common Spare for Rich Solution, Lean Carbonate Solution, and Direct Condenser Water

k. Lube Oil

h. The permittee shall not operate, or allow to be operated, any process in such manner that emissions of particulate matter from such process exceed seven (7) pounds in any 60 minute period or 100 pounds in any 24-hour period, except that no person subject to these requirements shall be required to reduce emissions to a greater degree than 99 percent. This condition shall apply to the sum of all stack emissions from such process including all emissions from any air pollution control device outlet(s) associated with such process. All fugitive emissions from such process shall be included in the sum of all stack emissions for purposes of this Subsection unless the stack emissions can be accurately measured and all fugitive emissions do not exceed the standards established by §2104.01 of this Article or any alternative standard(s) established for such source pursuant to §2104.01 of

proposed

Article XXI. [§2104.02.b]

i. The permittee shall not operate, or allow to be operated, any process, except for miscellaneous sulfur-emitting processes for which there is an emissions standard under Part E of Article XXI, in such manner that the concentration of sulfur oxides, expressed as sulfur dioxide, in the effluent gas exceeds 500 ppm (dry basis) at any time. [§2104.03.c]

j. The permittee shall not operate, or allow to be operated, any source in such manner that unburned coke oven gas is emitted into the open air. In addition, the permittee shall not flare, mix, or combust coke oven gas, or allow such gas to be flared, mixed or combusted unless the gas meets the requirements of Site Level Condition IV.33. [§2105.21.h; §2105.21.h.4]

k. Emissions from the desulfurization plant shall not exceed the limits listed in Table V-P-1 at any time: [§2105.21.e.3; §2105.03; SO_2 SIP IP 0052-I017, Condition V.B.1.c]

TABLE V-P-1 - Emission Limitations for SCOT Plant

POLLUTANT	HOURLY EMISSION LIMIT (lb/hr)	ANNUAL EMISSION LIMIT (tons/year)*
Particulate Matter	0.38	1.66
PM_{10}	0.37	1.63
SO_2**	24	105.12
CO	12.28	53.79
NO_X	0.84	3.68
VOC	0.99	4.34

*A year is defined as any consecutive 12-month period.
**SO_2 SIP IP 0052-I017, Condition V.B.1.c.

2. Testing Requirements:

a. At least once every two (2) years, the permittee shall perform a stack test of the SCOT plant incinerator waste gas stream to measure the emission rate of sulfur compounds. This shall be determined by the performance of three sets of two-hour average measurements of sulfur compounds in the waste gas stream and the associated volume gas flows. All concentration and flow measurements for each run shall be performed over the same two-hour sampling period. Acceptable H_2S and organic sulfide measurement techniques are specified in Chapters 15 and 16 of the Department's Source Testing Manual. Waste gas stream flow rates shall be determined by calibrated pitot tube measurements. All testing shall be performed in accordance with Article XXI. [Enforcement Order No. 200 (11/18/94); §2108.02; SO_2 SIP IP 0052-I017, Condition V.B.2.b]

b. The Department reserves the right to require additional emissions testing sufficient to assure compliance with the terms and conditions of this permit. Such testing shall be performed in accordance with Site Level Condition IV.14 above and Article XXI §2108.02. [§2103.12.h.1]

3. Monitoring Requirements:

a. The permittee shall monitor and record the online (operating) hours of the SCOT Plant.

proposed

[§2103.12.i; SO_2 SIP IP 0052-I017, Condition V.B.1.c]

b. In order to demonstrate compliance with the concentration of sulfur compounds in the clean coke oven gas as specified in §2105.21.h, the permittee shall continuously monitor the concentration of sulfur compounds, measured as H_2S, in the desulfurized coke oven gas according to the continuous Method approved by the Department. [§2103.12.i; SO_2 SIP IP 0052-I017, Condition V.B.1.c]

4. Record Keeping Requirements:

a. The permittee shall maintain records of all repairs, maintenance and modifications to: [§2103.12.j]

A. The two Claus Plants; and
B. The absorber columns, strippers and axi compressors in the Vacuum Carbonate Unit.

b. The permittee shall maintain records of the following information: [§2103.12.j]

1) For each day and for the month, the average grains of H_2S per 100 dscf of coke oven gas (COG) processed by the desulfurization system:
A. In the raw COG delivered;
B. In the clean COG;
C. In the tail gas; and
D. In the total of the clean COG and the tail gas;

2) The number of days on which the average grains H_2S per 100 dscf of COG (total of clean COG measurements and tail gas measurements) exceed the applicable standard, rounding off to the nearest 0.1 grain; and

3) The monthly percentage availability (on-line time) of the desulfurization system, based on the total hours of coke operations and the total hours that both the plant was fully available and all COG was normally processed; and

4) For each full or partial outage of the desulfurization system, including any full or partial bypassing of the system:
A. The starting and ending dates and times;
B. The total time of each outage, and the total for the month, to the nearest tenth of an hour;
C. The corresponding Department Breakdown Number; and the reason(s) or cause(s) for the outage.

5. Reporting Requirements:

a. The permittee shall report any event that causes the breakdown or unavailability of: [§2103.12.k; Enforcement Order 3/28/90]

1) Any Claus plant, stripper, absorber column or axi compressor to be ready for immediate operation, or to be available as spare equipment;
2) Both a heat exchanger and its respective spare, as set forth in V.P.1.g.1) above or
3) Both a pump and its respective spare, as set forth in V.P.1.g.2) above.

b. No later than twenty (20) days after the end of each month, a written report of a summary of the following during each such month shall be submitted to the Department: [§2103.12.k; Enforcement

proposed

Order 3/28/90]

1) For each day and for the month, the average grains of H_2S per 100 dscf of coke oven gas (COG) processed by the desulfurization system:
   A. In the raw COG delivered;
   B. In the clean COG;
   C. In the tail gas; and
   D. In the total of the clean COG and the tail gas;

2) The number of days on which the average grains H_2S per 100 dscf of COG (total of clean COG measurements and tail gas measurements) exceed the applicable standard, rounding off to the nearest 0.1 grain; and

3) The monthly percentage availability (on-line time) of the desulfurization system, based on the total hours of coke operations and the total hours that both the plant was fully available and all COG was normally processed; and

4) For each full or partial outage of the desulfurization system, including any full or partial bypassing of the system:

   A. The starting and ending dates and times;
   B. The total time of each outage, and the total for the month, to the nearest tenth of an hour;
   C. The corresponding Department Breakdown Number; and the reason(s) or cause(s) for the outage.

6. Work Practice Standards:

a. At no time shall the permittee operate the Desulfurization Plant unless it is properly operated and maintained according to good engineering and air pollution control practices by performing regular maintenance with the exception of actions to mitigate emergency conditions. [RACT IP 0052-I020b, condition V.D.1.b; RACT Order No. 234, Condition 1.1; 25 Pa Code §129.99; §2103.12.a.2.B]

b. The permittee shall: [RACT IP 0052-I020b, condition V.D.1.g; RACT Order No. 234, Condition 1.1; 25 Pa Code §129.99; §2103.12.a.2.B; §2105.06]

1) Properly maintain two Claus Plants at the coke oven gas desulfurization plant. Each Claus Plant shall be capable of independently processing all of the coke oven gas produced by the coke plant at full production.
2) Operating and maintaining a Vacuum Carbonate Unit at all times that coke oven gas is being produced at the Clairton Works.
3) Maintaining in good working order spare heat exchangers in the Vacuum Carbonate Units at the Clairton Works coke oven gas desulfurization facility.
4) Maintaining in good working order spare pumps in the Vacuum Carbonate Units at the coke oven gas desulfurization facility.
5) Good combustion practices.

PERMIT SHIELD IN EFFECT

proposed

Q. Keystone Cooling Tower: P020

Process Description: Cooling of non-contact cooling water
Facility ID: P020
Max. Design Rate: 39,420,000,000 gallons of water cooled per year
Capacity: 39,420,000,000 gallons of water cooled per year
Raw Materials: Non-contact cooling water
Control Device: Mist eliminators

1. Restrictions:

a. The permittee shall not operate, or allow to be operated, the Keystone cooling tower unless there is a mist eliminator installed, maintained and operated consistently with good air pollution control practice. [§2104.02.h]

b. The permittee shall only cool non-contact water in the cooling tower. [§2103.12.a.]

c. The permittee shall not operate, or allow to be operated, the Keystone cooling tower unless the water used for such cooling is equivalent to, or better than, the water quality standards established for the Monongahela River by regulations promulgated by the DEP under the Pennsylvania Clean Streams Law, Act of June 22, 1937, P.L. 1987, as amended, 35 P.S. 691.1 et seq., except that water from the Monongahela River may be used for such cooling. [§2104.02.h]

2. Testing Requirements:

The Department reserves the right to require emissions testing sufficient to assure compliance with the terms and conditions of this permit. Such testing shall be performed in accordance with Site Level Condition IV.14 and Article XXI §2108.02. [§2103.12.h.1]

3. Monitoring Requirements:

The permittee shall monitor the total dissolved solids (TDS) of the water/make-up water (Conductivity may be used to estimate TDS) daily, at a minimum. [§2103.12.i; §2102.04.e]

4. Record Keeping Requirements:

a. The permittee shall keep and maintain the records of TDS (required to be monitored by condition V.Q.3 above and present such records upon request by the Department. [§2103.12.j; §2103.12.k]

b. The permittee shall keep and maintain the records of the completed inspection and maintenance as required by conditions V.Q.6.a and V.Q.6.b below and present such records upon request by the Department. [§2103.12.j; §2103.12.k]

c. The permittee shall record all instances of non-compliance with the conditions of this permit upon occurrence along with corrective action taken to restore compliance. [§2103.12.j; §2103.12.k]

d. All records shall be retained by the facility for at least five (5) years. These records shall be made available to the Department upon request for inspection and/or copying. [§2103.12.j; §2103.12.k]

proposed

5. Reporting Requirements:

a. The permittee shall report non-compliance information required to be recorded by the Department in accordance with General Condition III.15. The reports shall contain all required information for the time period of the report. [§2103.12.k.1]

b. Reporting instances of non-compliance in accordance with condition V.Q.5.a does not relieve the permittee of the requirement to report breakdowns in accordance with Site Level Condition IV.9 above, if appropriate. [§2103.12.k.1]

6. Work Practice Standards

a. The permittee shall perform the following inspection quaterly, and any noted deficiencies are to be corrected as soon as possible to ensure proper operation of the cooling towers. [§2103.12.k.1]
   1) Inspect drift eliminators for the following:
      A. Proper installation;
      B. Spacing; and
      C. Condition.
   2) Inspect towers water flow and distribution;
   3) Inspect cooling towers fill for blockage.

b. The permittee shall inspect the cooling towers system for biological activity quarterly. Any noted deficiencies shall be corrected as soon as possible. [§2103.12.k.1]

7. Additional requirements

None except as provided elsewhere.

PERMIT SHIELD IN EFFECT

proposed

R. Coke By-Product Recovery Plant: P021

Process Description: Recovery of tars, ammonia, light-oil and clean coke oven gas from raw coke oven gas.
Facility ID: P021
Max. Design Rate: 8,240,605 tons of coal charged per year
Capacity: 6,394,800 tons of coke per year
Raw Materials: Raw coke oven gas
Control Device: Coke oven gas blanketing system and blanketing gas is fired in boilers and other furnaces to destroy VOCs captured by the blanketing system.

As identified above, Process P021 consists of the following number and type of equipment: main axial compressors, main regenerators, main vacuum machines, light oil vacuum machines, 8-light oil condensers, 3-cooler separators, light oil regenerators, 3-light oil tanks, final cooler demister wash, super-still light oil decanter, light oil blow down tank, 2-light oil decanters (V-604 & 605), 6-light oil storage tanks (T59 – T64), 9-tar storage tanks (3TA 41-49), 22-tar Decanters (3TA 12-23, 25-28, & 30-35), 3-wastewater surge tanks, 2-wastewater settling tanks, wastewater ammonia still feed tank, methanol storage tank–V-400 (50,000 gallons), foul methanol storage tank-V-410 (50,000 gallons) and methanol/MEA storage tank-V430 (20,000 gallons).

1. Restrictions:

a. At no time shall the permittee operate the by-products plant unless the clean coke oven gas blanketing system is being properly maintained and operated at all times while the plant process units blanketed by the system are emitting VOCs, with the exception of emergency or planned outages, repairs or maintenance. [§2105.06; RACT Plan 234]

b. All VOC emissions processed by the blanketing system shall be incinerated by combustion in the facilities coke batteries or boilers or by downstream consumers. [§2105.06; RACT Plan 234]

c. The permittee shall enclose and seal all openings on each process vessel, tar storage tank, and tar-intercepting sump. [§61.132(a)(1)]

d. The permittee shall duct gases from each process vessel, tar storage tank and tar-intercepting sump to the gas collection system, gas distribution system, or other enclosed point in the by-product recovery process where benzene in the gas will be recovered or destroyed. This control system shall be designed and operated for no detectable emissions, as indicated by an instrument reading of less than 500 ppm above background and visual inspections, as determined by the methods specified in Reference Method 21 of Appendix A, 40 CFR Part 60. This system can be designed as a closed, positive pressure, gas blanketing system. [§61.132(a)(2)]

1) Except, the permittee may elect to install, operate, and maintain a pressure relief device, vacuum relief device, an access hatch, and a sampling port on each process vessel, tar storage tank and tar-intercepting sump. Each access hatch and sampling port must be equipped with a gasket and a cover, seal or lid that must be kept in a closed position at all times, unless in actual use.
2) The permittee may elect to leave open to the atmosphere the portion of the liquid surface in each tar decanter necessary to permit operation of a sludge conveyor. If the permittee elects to maintain an opening on part of the liquid surface of the tar decanter, the permittee shall install, operate, and maintain a water leg seal on the tar decanter roof near the sludge discharge chute

proposed

to ensure enclosure of the major portion of liquid surface not necessary for the operation of the sludge conveyor.

e. The permittee shall comply with the requirements of V.R.1.c and V.R.1.d above, and V.R.3.a and V.R.3.b below for each benzene storage tank, BTX storage tank, light-oil storage tank, and excess ammonia-liquor storage tank. [§61.132(d)]

f. The permittee shall enclose and seal the liquid surface in the light oil sump to form a closed system to contain the emissions. [§61.133(a)]
   1) Except, the permittee may elect to install, operate, and maintain a vent on the light-oil sump cover. Each vent pipe must be equipped with a water leg seal, a pressure relief device, or vacuum relief device.
   2) Except, the permittee may elect to install, operate, and maintain an access hatch on each light-oil sump cover. Each access hatch must be equipped with a gasket and a cover, seal, or lid that must be kept in a closed position at all times, unless in actual use.
   3) The light-oil sump cover may be removed for periodic maintenance but must be replaced (with seal) at completion of the maintenance operation.

g. The venting of steam or other gases from the by-product process to the light-oil sump is not permitted. [§61.133(b)]

h. The permittee shall allow no ("zero") emissions from naphthalene processing, final coolers and final-cooler cooling tower. [§61.134(a)]

i. The permittee of equipment in benzene service shall comply with the requirements of 40 CFR Part 61, Subpart V, except as provided in V.R.1.j and V.R.3.d below Also, the provisions of §61.242–3 and §61.242–9 of 40 CFR Subpart V do not apply to 40 CFR 61, Subpart L. [§61.135(a) & (b)]

j. Each piece of equipment in benzene service to which 40 CFR 61, Subpart L applies shall be marked in such a manner that it can be distinguished readily from other pieces of equipment in benzene service. [§61.135(c)]

k. The permittee subject to the provisions of 40 CFR 61, Subpart L, shall demonstrate compliance with the requirements of V.R.1.c through V.R.1.j above and V.R.3.a through V.R.3.h below, except as provided under Conditions V.R.1.nn through V.R.1.uu below. [§61.136(a)]

l. Compliance with 40 CFR 61, Subpart L shall be determined by a review of records, review of performance test results, inspections, or any combination thereof, using the methods and procedures specified in V.R.2.a below. [§61.136(b)]

m. The permittee may request permission to use an alternative means of emission limitation to meet the requirements in Conditions V.R.1.c through V.R.1.g above, V.R.1.i and V.R.1.j above, and V.R.3.a through V.R.3.h below, V.R.1.l through V.R.1.t below, V.R.3.r through V.R.3.z below, V.R.3.ii through V.R.3.ss below and V.R.1.mm below. [§61.136(d)]

   1) Permission to use an alternative means of emission limitation shall be requested as specified in §61.12(d).
   2) When the Administrator and the Department evaluates requests for permission to use alternative means of emission limitation for sources subject to Conditions V.R.1.c through V.R.1.g above and V.R.3.a through V.R.3.c below (except tar decanters) the Administrator and the Department shall compare test data for the means of emission limitation to a benzene

proposed

control efficiency of 98 percent. For tar decanters, the Administrator and the Department shall compare test data for the means of emission limitation to a benzene control efficiency of 95 percent.

3) For any requests for permission to use an alternative to the work practices required under Conditions V.R.1.i and V.R.1.j above, and V.R.3.d through V.R.3.h below, the provisions of Condition V.R.1.xx below shall apply.

n. The permittee subject to the provisions of 40 CFR Part 61, Subpart V shall demonstrate compliance with the requirements of V.R.1.n through V.R.1.mm below, and V.R.3.i through V.R.3.ss below as required in 40 CFR 61.05, except as provided in Conditions V.R.1.nn through V.R.1.rr below and Conditions V.R.1.vv through V.R.1.zz below. [§61.242-1(a)]

o. Compliance with this 40 CFR 61, Subpart V shall be determined by review of records, review of performance test results, and inspection using the methods and procedures specified in V.R.3.tt through V.R.3.xx below. [§61.242-1(b)]

p. The permittee may request a determination of alternative means of emission limitation to the requirements of §61.242–2; 61.242–3; 61.242–5; 61.242–6; 61.242–7; 61.242–8 and 61.242–11 as provided in §61.244. [§61.242-1(c)(1)]

q. If the Administrator and Department make a determination that a means of emission limitation is at least a permissible alternative to the requirements of §61.242–2; 61.242–3; 61.242–5; 61.242–6; 61.242–7; 61.242–8 or 61.242–11, an owner or operator shall comply with the requirements of that determination. [§61.242-1(c)(2)]

r. Each piece of equipment to which 40 CFR 61, Subpart V applies shall be marked in such a manner that it can be distinguished readily from other pieces of equipment. [§61.242-1(d)]

s. Equipment that is in vacuum service is excluded from the requirements of V.R.1.t through V.R.1.mm below and V.R.3.i through V.R.1.rr below if it is identified as required in V.R.4.g.5) below. [§61.242-1(e)]

t. Each compressor shall be equipped with a seal system that includes a barrier fluid system and that prevents leakage of process fluid to atmosphere, except as provided in §61.242-1(c) and Conditions V.R.1.bb and V.R.1.cc below. [§61.242-3(a)]

u. Each compressor seal system as required in Condition V.R.1.t above shall be: [§61.242-3(b)]

1) Operated with the barrier fluid at a pressure that is greater than the compressor stuffing box pressure; or
2) Equipped with a barrier fluid system degassing reservoir that is routed to a process or fuel gas system or connected by a closed-vent system to a control device that complies with the requirements of Conditions V.R.3.ii through V.R.3.ss below and V.R.1.mm below; or
3) Equipped with a system that purges the barrier fluid into a process stream with zero VHAP emissions to atmosphere.

v. The barrier fluid shall not be in VHAP service and, if the compressor is covered by standards under 40 CFR part 60, shall not be in VOC service. [§61.242-3(c)]

w. Each barrier fluid system as described in Conditions V.R.1.t through V.R.1.v above shall be

proposed

equipped with a sensor that will detect failure of the seal system, barrier fluid system, or both. [§61.242-3(d)]

x. Each sensor as required in Condition V.R.1.w above shall be checked daily or shall be equipped with an audible alarm unless the compressor is located within the boundary of an unmanned plant site. [§61.242-3(e)(1)]

y. The permittee shall determine, based on design considerations and operating experience, a criterion that indicates failure of the seal system, the barrier fluid system, or both. [§61.242-3(e)(2)]

z. If the sensor indicates failure of the seal system, the barrier fluid system, or both based on the criterion determined under Condition V.R.1.y above, a leak is detected. [§61.242-3(f)]

aa. When a leak is detected, it shall be repaired as soon as practicable, but not later than 15 calendar days after it is detected, except as provided in Conditions V.R.3.dd through V.R.3.hh below. A first attempt at repair shall be made no later than 5 calendar days after each leak is detected. [§61.242-3(g)]

bb. A compressor is exempt from the requirements of Conditions V.R.1.t and V.R.1.u above if it is equipped with a closed-vent system to capture and transport leakage from the compressor drive shaft back to a process or fuel gas system or to a control device that complies with the requirements of V.R.3.ii through V.R.3.ss below and V.R.1.mm below, except as provided in Condition V.R.1.cc below. [§61.242-3(h)]

cc. Any Compressor that is designated, as described in Condition V.R.4.g.2) below, for no detectable emission as indicated by an instrument reading of less than 500 ppm above background is exempt from the requirements of paragraphs V.R.1.t through V.R.1.bb above if the compressor: [§61.242-3(i)]

1) Is demonstrated to be operating with no detectable emissions, as indicated by an instrument reading of less than 500 ppm above background, as measured by the method specified in V.R.3.uu below; and
2) Is tested for compliance with paragraph V.R.1.cc.1) above initially upon designation, annually, and at other times requested by the Administrator and the Department.

dd. Except during pressure releases, each pressure relief device in gas/vapor service shall be operated with no detectable emissions, as indicated by an instrument reading of less than 500 ppm above background, as measured by the method specified in §61.245(c) or V.R.3.uu. [§61.242-4(a)]

ee. The permittee shall equip each sampling connection system with a closed-purge, closed loop, or closed vent system, except as provided in V.R.1.p and V.R.1.q. Gases displaced during filling of the sample container are not required to be collected or captured. [§61.242-5(a)]

ff. Each closed-purge, closed loop or closed vent system as required in Condition V.R.1.ee above shall: [§61.242-5(b)]

1) Return the purged process fluid directly to the process line; or
2) Collect and recycle the purged process fluid; or
3) Be designed and operated to capture and transport all the purged process fluid to a control device that complies with the requirements of Conditions V.R.3.ii through V.R.3.ss below and V.R.1.mm below, or
4) Collect, store, and transport the purged process fluid to any of the following systems or

proposed

facilities:

A. A waste management unit as defined in §63.111 if the waste management unit is subject to and operated in compliance with the provisions of 40 CFR Part 63, Subpart G, applicable to Group 1 wastewater streams; or
B. A treatment, storage, or disposal facility subject to regulation under 40 CFR Part 262, 264, 265, or 266; or
C. A facility permitted, licensed, or registered by a State to manage municipal or industrial solid waste, if the process fluids are not hazardous waste as defined in 40 CFR Part 261.

gg. In-situ sampling systems and sampling systems without purges are exempt from the requirements of Conditions V.R.1.ee and V.R.1.ff above. [§61.242-5(c)]

hh. The permittee shall equip each open-ended valve or line with a cap, blind flange, plug, or a second valve, except as provided in 40 CFR 61.242-1(c). The cap, blind flange, plug, or second valve shall seal the open end at all times except during operations requiring process fluid flow through the open-ended valve or line. [§61.242-6(a)]

ii. Each open-ended valve or line equipped with a second valve shall be operated in a manner such that the valve on the process fluid end is closed before the second valve is closed. [§61.242-6(b)]

jj. When a double block and bleed system is being used, the bleed valve or line may remain open during operations that require venting the line between the block valves but shall comply with Condition V.R.1.hh above at all other times. [§61.242-6(c)]

kk. Open-ended valves or lines in an emergency shutdown system which are designed to open automatically in the event of a process upset are exempt from the requirements of Conditions V.R.1.hh through V.R.1.jj above. [§61.242-6(d)]

ll. Open-ended valves or lines containing materials which would auto-catalytically polymerize or would present an explosion, serious overpressure, or other safety hazard if capped or equipped with a double block and bleed system as specified in Conditions V.R.1.hh through V.R.1.jj above are exempt from the requirements of Conditions V.R.1.hh through V.R.1.jj above. [§61.242-6(e)]

mm. Closed vent systems and control devices used to comply with provisions of 40 CFR Part 61, Subpart V shall be operated at all times when emissions may be vented to them. [§61.242-11(m)]

nn. The permittee may elect to have all valves within a process unit to comply with an allowable percentage of valves leaking of equal to or less than 2.0 percent. [§61.243-1(a)]

oo. The following requirements shall be met if the permittee decides to comply with an allowable percentage of valves leaking: [§61.243-1(b)]

1) The permittee must notify the Administrator and the Department that the permittee has elected to have all valves within a process unit to comply with the allowable percentage of valves leaking before implementing this alternative standard, as specified in Condition V.R.5.d below.
2) A performance test as specified in Condition V.R.1.pp below shall be conducted initially upon designation, annually, and at other times requested by the Administrator and the Department.
3) If a valve leak is detected, it shall be repaired in accordance with Condition V.R.5.d below.

proposed

pp. Performance tests shall be conducted in the following manner: [§61.243-1(c)]
1) All valves in VHAP service within the process unit shall be monitored within 1 week by the methods specified in Condition V.R.3.tt below.
2) If an instrument reading of 10,000 ppm or greater is measured, a leak is detected.
3) The leak percentage shall be determined by dividing the number of valves in VHAP service for which leaks are detected by the number of valves in VHAP service within the process unit.

qq. The permittee who elects to have all valves comply with this alternative standard shall not have a process unit with a leak percentage greater than 2.0 percent. [§61.243-1(d)]

rr. If the permittee decides no longer to comply with Conditions V.R.1.nn through V.R.1.qq above, the permittee must notify the Administrator and the Department in writing that the work practice standard described in Conditions V.R.3.r through V.R.3.v below will be followed. [§61.243-1(e)]

ss. The permittee may elect for all valves within a process unit to comply with one of the alternative work practices specified in Conditions V.R.1.oo.2) and V.R.1.oo.3) above. [§61.243-2(a)(1)]

tt. The permittee shall notify the Administrator and the Department before implementing one of the alternative work practices, as specified in Condition V.R.3.u below. [§61.243-2(a)(2)]

uu. The permittee shall: [§61.243-2(b)]

1) Comply initially with the requirements for valves, as described in Conditions V.R.3.r through V.R.3.y below.
2) After 2 consecutive quarterly leak detection periods with the percentage of valves leaking equal to or less than 2.0, an owner or operator may begin to skip one of the quarterly leak detection periods for the valves in VHAP service.
3) After five consecutive quarterly leak detection periods with the percentage of valves leaking equal to or less than 2.0, an owner or operator may begin to skip three of the quarterly leak detection periods for the valves in VHAP service.
4) If the percentage of valves leaking is greater than 2.0, the owner or operator shall comply with the requirements as described in Conditions V.R.3.r through V.R.3.y below but may again elect to use this section.

vv. Permission to use an alternative means of emission limitation under section 112(e)(3) of the Clean Air Act shall be governed by the procedures in Conditions V.R.1.ww through V.R.1.zz below: [§61.244(a)]

ww. Where the standard is an equipment, design, or operational requirement: [§61.244(b)]

1) The permittee applying for permission shall be responsible for collecting and verifying test data for an alternative means of emission limitation to test data for the equipment, design, and operational requirements.
2) The Administrator and the Department may condition the permission on requirements that may be necessary to assure operation and maintenance to achieve the same emission reduction as the equipment, design, and operational requirements.

xx. Where the standard is a work practice: [§61.244(c)]
1) Each owner or operator applying for permission shall be responsible for collecting and verifying test data for an alternative means of emission limitation.

proposed

2) For each source for which permission is requested, the emission reduction achieved by the required work practices shall be demonstrated for a minimum period of 12 months.
3) For each source for which permission is requested, the emission reduction achieved by the alternative means of emission limitation shall be demonstrated.
4) Each owner or operator applying for permission shall commit in writing each source to work practices that provide for emission reductions equal to or greater than the emission reductions achieved by the required work practices.
5) The Administrator and the Department will compare the demonstrated emission reduction for the alternative means of emission limitation to the demonstrated emission reduction for the required work practices and will consider the commitment in conditions V.R.1.xx.4) above.
6) The Administrator and the Department may condition the permission on requirements that may be necessary to assure operation and maintenance to achieve the same emission reduction as the required work practices of 40 CFR 61, Subpart V.

yy. An owner or operator may offer a unique approach to demonstrate the alternative means of emission limitation. [§61.244(d)]

zz. Manufacturers of equipment used to control equipment leaks of a VHAP may apply to the Administrator and the Department for permission for an alternative means of emission limitation that achieves a reduction in emissions of the VHAP achieved by the equipment, design, and operational requirements of 40 CFR 61, Subpart V. The Administrator and Department will grant permission according to the provisions of conditions V.R.1.ww through V.R.1.yy above. [§61.244(e)]

aaa. If the total annual benzene quantity from facility waste is less than 10 megagrams per year (Mg/yr) (11 ton/yr) the permittee shall be exempt from the requirements of paragraphs §61.342(b) and (c). The total annual benzene quantity from facility waste is the sum of the annual benzene quantity for each waste stream at the facility that has a flow-weighted annual average water content greater than 10 percent or that is mixed with water, or other wastes, at any time and the mixture has an annual average water content greater than 10 percent. The benzene quantity in a waste stream is to be counted only once without multiple counting if other waste streams are mixed with or generated from the original waste stream. Other specific requirements for calculating the total annual benzene waste quantity are as follows: [§61.342(a)]

1) Wastes that are exempted from control under §§61.342(c)(2) and 61.342(c)(3) are included in the calculation of the total annual benzene quantity if they have an annual average water content greater than 10 percent, or if they are mixed with water or other wastes at any time and the mixture has an annual average water content greater than 10 percent.
2) The benzene in a material subject to 40 CFR 61, Subpart FF that is sold is included in the calculation of the total annual benzene quantity if the material has an annual average water content greater than 10 percent.
3) Benzene in wastes generated by remediation activities conducted at the facility, such as the excavation of contaminated soil, pumping and treatments of groundwater, and the recovery of product from soil or groundwater, are not included in the calculation of total annual benzene quantity for that facility. If the facility's total annual benzene quantity is 10 Mg/yr (11 ton/yr) or more, wastes generated by remediation activities are subject to the requirements of §61.342(c) through 61.342(h). If the facility is managing remediation waste generated offsite, the benzene in this waste shall be included in the calculation of total annual benzene quantity in facility waste, if the waste streams have an annual average water content greater than 10 percent, or if they are mixed with water or other wastes at any time and the mixture has an

proposed

annual average water content greater than 10 percent. The total annual benzene quantity is determined based upon the quantity of benzene in the waste before any waste treatment occurs to remove the benzene except as specified in Conditions V.R.2.d.1)A.i) through V.R.2.d.1)A.iii) below.

bbb. No person shall place or store, or allow to be placed or stored, a volatile organic compound having a vapor pressure greater than 1.5 psia under actual storage conditions in any stationary tank, reservoir, or other container with a capacity greater than 40,000 gallons, unless such tank, reservoir, or other container is a pressure tank capable of maintaining working pressure sufficient to at all times prevent vapor or gas loss to the atmosphere or is equipped with: [§2105.12.b]

1) An external or internal floating roof, except that this control equipment shall not be permitted if the volatile organic compounds have a vapor pressure of 11.0 psia or greater under actual storage conditions; or
2) A vapor recovery and disposal system reducing uncontrolled emissions of volatile organic compounds by at least 90% by weight. Compliance testing shall be done in accordance with the provisions of §2107.04 of this Article.

ccc. The permittee shall not operate or allow to be operated methanol storage tanks V-400 and V-410 unless gas blanketing system reducing emissions of VOC by at least 98% by weight is in place and operating. [ACHD Installation Permit 0052-I004a and §2102.04.b.6]

ddd. The throughput for each methanol storage tank V-400 and V-410 shall not exceed 867,000 gallons per year, for the tank V-430 (MEA/methanol tank) throughput shall not exceed 160,000gallons per year. [ACHD Installation Permit 0052-I004a; §2102.04.b.6]

eee. Per General Condition III.17 above, the permittee shall not reactivate any tank that has been out of operation for a period of one year or more unless the permittee has submitted a reactivation plan request to, and received a written reactivation plan approval from the Department. [§2103.13(d)]

1) The reactivation of a tank that has been deactivated for more than ten (10) years shall constitute a new source under Article XXI requiring the issuance of a new source Installation Permit. [§2103.13(d)(5)]
2) All tanks deactivated for more than one (1) year shall constitute new sources upon reactivation unless the permittee, by no later than one (1) year following actual deactivation, submits a maintenance plan for the tank to be implemented during the period of deactivation. [§2103.13(d)(7)]
3) Any reactivation plan issued for a tank which has been deactivated for more than five (5) years shall require the implementation of BACT prior to actual reactivation. [§2103.13(d)(8)]

proposed

fff. Emissions from sources in the by-products recovery area and regulated by the benzene NESHAPS (40 CFR Part 61 Subpart L) shall not exceed the limits listed in Table V-R-1 at any time: [§2105.03; Installation Permit 91-I-0021 P]

TABLE V-R-1 – By-Products Area Emission Limitations

POLLUTANT*	ANNUAL EMISSION LIMIT (tons/year)[1]
VOC	68.0
Benzene	54.0

[1]A year is defined as any consecutive 12-month period.
*There are no lb/hr limit for VOC and Benzene. 40 CFR, Subpart L requires the facility to determine the annual benzene limit.

2. Testing Requirements:

a. To determine whether or not a piece of equipment is in benzene service, the methods in V.R.3.vv through V.R.3.xx below shall be used, except that, for exhausters, the percent benzene shall be 1 percent by weight, rather than the 10 percent by weight described in Conditions V.R.3.vv through V.R.3.xx below. [§61.137(b)]

b. The permittee shall determine the total annual benzene quantity from facility waste by the following procedure: [§61.355(a)]

1) For each waste stream subject to this 40 CFR 61, Subpart FF having a flow-weighted annual average water content greater than 10 percent water, on a volume basis as total water, or is mixed with water or other wastes at any time and the resulting mixture has an annual average water content greater than 10 percent as specified in Condition V.R.1.aaa above, the permittee shall:
   A. Determine the annual waste quantity for each waste stream using the procedures specified in condition V.R.2.c below.
   B. Determine the flow-weighted annual average benzene concentration for each waste stream using the procedures specified in condition V.R.2.d.1) below.
   C. Calculate the annual benzene quantity for each waste stream by multiplying the annual waste quantity of the waste stream times the flow-weighted annual average benzene concentration.

2) Total annual benzene quantity from facility waste is calculated by adding together the annual benzene quantity for each waste stream generated during the year and the annual benzene quantity for each process unit turnaround waste annualized according to Condition V.R.2.b.4) below.
3) If the total annual benzene quantity from facility waste is equal to or greater than 10 Mg/yr (11 ton/yr), then the permittee shall comply with the requirements of §61.342 (c), (d), or (e).

4) If the total annual benzene quantity from facility waste is less than 10 Mg/yr (11 ton/yr) but is equal to or greater than 1 Mg/yr (1.1 ton/yr), then the permittee shall:
   A. Comply with the recordkeeping requirements of V.R.4.n below and reporting requirements of V.R.5.e below; and
   B. Repeat the determination of total annual benzene quantity from facility waste at least once

proposed

per year and whenever there is a change in the process generating the waste that could cause the total annual benzene quantity from facility waste to increase to 10 Mg/yr (11 ton/yr) or more.

5) If the total annual benzene quantity from facility waste is less than 1 Mg/yr (1.1 ton/yr), then the permittee shall:

A. Comply with the recordkeeping requirements of V.R.4.n below and reporting requirements of V.R.5.e below; and
B. Repeat the determination of total annual benzene quantity from facility waste whenever there is a change in the process generating the waste that could cause the total annual benzene quantity from facility waste to increase to 1 Mg/yr (1.1 ton/yr) or more.

6) The benzene quantity in a waste stream that is generated less than one time per year, except as provided for process unit turnaround waste in condition V.R.2.c.4) below, shall be included in the determination of total annual benzene quantity from facility waste for the year in which the waste is generated unless the waste stream is otherwise excluded from the determination of total annual benzene quantity from facility waste in accordance with conditions V.R.2.b through V.R.2.d. The benzene quantity in this waste stream shall not be annualized or averaged over the time interval between the activities that resulted in generation of the waste, for purposes of determining the total annual benzene quantity from facility waste.

c. The permittee shall determine the annual waste quantity at the point of waste generation, unless otherwise provided in Conditions V.R.2.c.1) through V.R.2.c.4) by one of the methods given in Conditions V.R.2.c.5) through V.R.2.c.7) below [§61.355(b)]

1) The determination of annual waste quantity for sour water streams that are processed in sour water strippers shall be made at the point that the water exits the sour water stripper.

2) The determination of annual waste quantity for wastes at coke by-product plants subject to and complying with the control requirements of §61.132, §61.133, §61.134, or §61.139 of 40 CFR subpart L shall be made at the location that the waste stream exits the process unit component or waste management unit controlled by that subpart or at the exit of the ammonia still, provided that the following conditions are met:

A. The transfer of wastes between units complying with the control requirements of 40 CFR Part 61, Subpart L, process units, and the ammonia still is made through hard piping or other enclosed system.

B. The ammonia still meets the definition of a sour water stripper in §61.341.

3) The determination of annual waste quantity for wastes that are received at hazardous waste treatment, storage, or disposal facilities from offsite shall be made at the point where the waste enters the hazardous waste treatment, storage, or disposal facility.

4) The determination of annual waste quantity for each process unit turnaround waste generated only at 2 year or greater intervals, may be made by dividing the total quantity of waste generated during the most recent process unit turnaround by the time period (in the nearest tenth of a year) between the turnaround resulting in generation of the waste and the most recent preceding process turnaround for the unit. The resulting annual waste quantity shall be included in the calculation of the annual benzene quantity as provided in V.R.2.b.1)C above for the year

proposed

in which the turnaround occurs and for each subsequent year until the unit undergoes the next process turnaround. For estimates of total annual benzene quantity as specified in the 90-day report, required under §61.357(a)(1), the owner or operator shall estimate the waste quantity generated during the most recent turnaround, and the time period between turnarounds in accordance with good engineering practices. If the owner or operator chooses not to annualize process unit turnaround waste, as specified in this paragraph, then the process unit turnaround waste quantity shall be included in the calculation of the annual benzene quantity for the year in which the turnaround occurs.

5) Select the highest annual quantity of waste managed from historical records representing the most recent 5 years of operation or, if the facility has been in service for less than 5 years but at least 1 year, from historical records representing the total operating life of the facility;

6) Use the maximum design capacity of the waste management unit; or

7) Use measurements that are representative of maximum waste generation rates.

d. For the purposes of the calculation required by paragraph V.R.2.b above, the permittee shall determine the flow-weighted annual average benzene concentration in a manner that meets the requirements given in paragraph V.R.2.d.1) below using either of the methods given in paragraphs V.R.2.e or V.R.2.f below. [§61.355(c)]

1) The determination of flow-weighted annual average benzene concentration shall meet all of the following criteria:
   A. The determination shall be made at:
      i) The location that the waste stream exits the process unit component or waste management unit controlled by 40 CFR Part 61, Subpart L or at the exit of the ammonia still, provided that the following conditions are met:
         A. The transfer of wastes between units complying with the control requirements of 40 CFR Part 61, Subpart L, process units, and the ammonia still is made through hard piping or other enclosed system.
         B. The ammonia still meets the definition of a sour water stripper in §61.341.
      ii) The determination for wastes that are received from offsite shall be made at the point where the waste enters the hazardous waste treatment, storage, or disposal facility.
      iii) The determination of flow-weighted annual average benzene concentration for process unit turnaround waste shall be made using either of the methods given in paragraphs V.R.2.e or V.R.2.f below. The resulting flow-weighted annual average benzene concentration shall be included in the calculation of annual benzene quantity as provided in paragraph V.R.2.b.1)C above for the year in which the turnaround occurs and for each subsequent year until the unit undergoes the next process unit turnaround.
   B. Volatilization of the benzene by exposure to air shall not be used in the determination to reduce the benzene concentration.
   C. Mixing or diluting the waste stream with other wastes or other materials shall not be used in the determination -- to reduce the benzene concentration.
   D. The determination shall be made prior to any treatment of the waste that removes benzene, except as specified in paragraphs V.R.2.b.1)A above.
   E. For wastes with multiple phases, the determination shall provide the weighted-average benzene concentration based on the benzene concentration in each phase of the waste and the relative proportion of the phases.

proposed

e. The permittee shall provide sufficient information to document the flow-weighted annual average benzene concentration of each waste stream. Examples of information that could constitute knowledge include material balances, records of chemical purchases, or previous test results provided the results are still relevant to the current waste stream conditions. If test data are used, then the permittee shall provide documentation describing the testing protocol and the means by which sampling variability and analytical variability were accounted for in the determination of the flow-weighted annual average benzene concentration for the waste stream. When the permittee and the Administrator and the Department do not agree on determinations of the flow-weighted annual average benzene concentration based on knowledge of the waste, the procedures in paragraph V.R.2.f below shall be used to resolve the disagreement. [§61.355(c)(2)]

f. Measurements of the benzene concentration in the waste stream in accordance with the following procedures: [§61.355(c)(3)]

1) Collect a minimum of three representative samples from each waste stream. Where feasible, samples shall be taken from an enclosed pipe prior to the waste being exposed to the atmosphere.
2) For waste in enclosed pipes, the following procedures shall be used:
   A. Samples shall be collected prior to the waste being exposed to the atmosphere in order to minimize the loss of benzene prior to sampling.
   B. A static mixer shall be installed in the process line or in a by-pass line unless the owner or operator demonstrates that installation of a static mixer in the line is not necessary to accurately determine the benzene concentration of the waste stream.
   C. The sampling tap shall be located within two pipe diameters of the static mixer outlet.
   D. Prior to the initiation of sampling, sample lines and cooling coil shall be purged with at least four volumes of waste.
   E. After purging, the sample flow shall be directed to a sample container and the tip of the sampling tube shall be kept below the surface of the waste during sampling to minimize contact with the atmosphere.
   F. Samples shall be collected at a flow rate such that the cooling coil is able to maintain a waste temperature less than 10 °C (50 °F).
   G. After filling, the sample container shall be capped immediately (within 5 seconds) to leave a minimum headspace in the container.
   H. The sample containers shall immediately be cooled and maintained at a temperature below 10 °C (50 °F) for transfer to the laboratory.
3) When sampling from an enclosed pipe is not feasible, a minimum of three representative samples shall be collected in a manner to minimize exposure of the sample to the atmosphere and loss of benzene prior to sampling.
4) Each waste sample shall be analyzed using one of the following test methods for determining the benzene concentration in a waste stream:
   A. Method 8020, Aromatic Volatile Organics, in "Test Methods for Evaluating Solid Waste, Physical/Chemical Methods," EPA Publication No. SW-846 (incorporation by reference as specified in §61.18 of 40 CFR 61);
   B. Method 8021, Volatile Organic Compounds in Water by Purge and Trap Capillary Column Gas Chromatography with Photo-ionization and Electrolytic Conductivity Detectors in Series in "Test Methods for Evaluating Solid Waste, Physical/Chemical Methods," EPA Publication No. SW-846 (incorporation by reference as specified in §61.18 of 40 CFR 61);
   C. Method 8240, Gas Chromatography/Mass Spectrometry for Volatile Organics in "Test Methods for Evaluating Solid Waste, Physical/Chemical Methods," EPA Publication No. SW-846 (incorporation by reference as specified in § 61.18 of 40 CFR 61);

proposed

D. Method 8260, Gas Chromatography/Mass Spectrometry for Volatile Organics: Capillary Column Technique in "Test Methods for Evaluating Solid Waste, Physical/Chemical Methods," EPA Publication No. SW-846 (incorporation by reference as specified in § 61.18 of 40 CFR 61);

E. Method 602, Purgeable Aromatics, as described in 40 CFR part 136, appendix A, Test Procedures for Analysis of Organic Pollutants, for wastewaters for which this is an approved EPA methods; or

F. Method 624, Purgeables, as described in 40 CFR Part 136, appendix A, Test Procedures for Analysis of Organic Pollutants, for wastewaters for which this is an approved EPA method.

5) The flow-weighted annual average benzene concentration shall be calculated by averaging the results of the sample analyses as follows:

$$C = \frac{1}{Q_t} \times \sum_{i=1}^{n} (Q_i)\,(C_i)$$

Where:
C = Flow-weighted annual average benzene concentration for waste stream, ppmw.
Q_t = Total annual waste quantity for waste stream, kg/yr (lb/yr).
n = Number of waste samples (at least 3).
Q_i = Annual waste quantity for waste stream represented by C_i, kg/yr (lb/yr).
C_i = Measured concentration of benzene in waste sample i, ppmw.

3. Monitoring Requirements:

a. Following the installation of any control equipment used to meet the requirements of V.R.1.c and V.R.1.d above, the permittee shall monitor the connections and seals on each control system to determine if it is operating with no detectable emissions, using Reference Method 21 of 40 CFR Part 60, Appendix A and procedures specified in §61.245(c), and shall visually inspect each source (including sealing materials) and the ductwork of the control system for evidence of visible defects such as gaps or tears. This monitoring and inspection shall be conducted on a semiannual basis and at any other time after the control system is re-pressurized with blanketing gas following removal of the cover or opening of the access hatch. [§61.132(b)]

1) If an instrument reading indicates an organic chemical concentration more than 500 ppm above a background concentration, as measured by Method 21, a leak is detected.
2) If visible defects such as gaps in sealing materials are observed during a visual inspection, a leak is detected
3) When a leak is detected, it shall be repaired as soon as practicable, but not later than 15 calendar days after it is detected
4) A first attempt at repair of any leak or visible defect shall be made no later than 5 calendar days after each leak is detected.

b. Following the installation of any control system used to meet the requirements of Conditions V.R.1.c and V.R.1.d above, the permittee shall conduct a maintenance inspection of the control system on an annual basis for evidence of system abnormalities, such as blocked or plugged lines, sticking valves, plugged condensate traps, and other maintenance defects that could result in abnormal system operation. The permittee shall make a first attempt at repair within 5 days, with repair within 15 days of detection. [§61.132(c)]

c. Following the installation of any control equipment used to meet the requirements of Condition

proposed

V.R.1.f above, the permittee shall monitor the connections and seals on each control system to determine if it is operating with no detectable emissions, using Method 21 (40 CFR part 60, appendix A) and the procedures specified in V.R.3.uu below, and shall visually inspect each source (including sealing materials) for evidence of visible defects such as gaps or tears. This monitoring and inspection shall be conducted semiannually and at any other time the cover is removed. [§61.133(c)]

1) If an instrument reading indicates an organic chemical concentration more than 500 ppm above a background concentration, as measured by Method 21, a leak is detected.
2) If visible defects such as gaps in sealing materials are observed during a visual inspection, a leak is detected.
3) When a leak is detected, it shall be repaired as soon as practicable, but not later than 15 calendar days after it is detected.
4) A first attempt at repair of any leak or visible defect shall be made no later than 5 calendar days after each leak is detected.

d. Each exhauster shall be monitored quarterly to detect leaks by the methods specified in V.R.3.tt below except as provided in §61.136(d) and paragraphs V.R.3.e through V.R.3.g below. [§61.135(d)]

1) If an instrument reading of 10,000 ppm or greater is measured, a leak is detected.
2) When a leak is detected, it shall be repaired as soon as practicable, but no later than 15 calendar days after it is detected, except as provided in V.R.3.aa and V.R.3.bb below. A first attempt at repair shall be made no later than 5 calendar days after each leak is detected.

e. Each exhauster equipped with a seal system that includes a barrier fluid system and that prevents leakage of process fluids to the atmosphere is exempt from the requirements of Condition V.R.3.d above provided the following requirements are met: [§61.135(e)]

1) Each exhauster seal system is:
   A. Operated with the barrier fluid at a pressure that is greater than the exhauster stuffing box pressure; or
   B. Equipped with a barrier fluid system that is connected by a closed vent system to a control device that complies with the requirements of Conditions V.R.3.ii through V.R.3.ss below and V.R.1.mm above; or
   C. Equipped with a system that purges the barrier fluid into a process stream with zero benzene emissions to the atmosphere.
2) The barrier fluid is not in benzene service.
3) Each barrier fluid system shall be equipped with a sensor that will detect failure of the seal system, barrier fluid system, or both.
4) Each sensor as described in Condition V.R.3.e.3) above:
   A. Shall be checked daily or shall be equipped with an audible alarm.
   B. The permittee shall determine, based on design considerations and operating experience, a criterion that indicates failure of the seal system, the barrier fluid system, or both.
5) If the sensor indicates failure of the seal system, the barrier system, or both (based on the criterion determined under Condition V.R.3.e.4)B above, a leak is detected.
6) When a leak is detected:
   A. It shall be repaired as soon as practicable, but not later than 15 calendar days after it is detected, except as provided in Conditions V.R.3.dd through V.R.3.hh below.
   B. A first attempt at repair shall be made no later than 5 calendar days after each leak is

proposed

detected.

f. An exhauster is exempt from the requirements of Condition V.R.3.d above if it is equipped with a closed vent system capable of capturing and transporting any leakage from the seal or seals to a control device that complies with the requirements of Conditions V.R.3.ii through V.R.3.ss below and V.R.1.mm above except as provided in Condition V.R.3.g.1) below. [§61.135(f)]

g. Any exhauster that is designated, as described in V.R.4.g below for no detectable emissions, as indicated by an instrument reading of less than 500 ppm above background, is exempt from the requirements of Condition V.R.3.d above if the exhauster: [§61.135(g)]

1) Is demonstrated to be operating with no detectable emissions, as indicated by an instrument reading of less than 500 ppm above background, as measured by the methods specified in §61.245(c); and
2) Is tested for compliance with Condition V.R.3.g.1) above initially upon designation, annually, and at other times requested by the Administrator and the Department.

h. Any exhauster that is in vacuum service is excluded from the requirements of this 40 CFR 61, Subpart L if it is identified as required in Condition V.R.4.g.5) below. [§61.135(h)]

i. Each pump shall be: [§61.242-2(a)]
1) Monitored monthly to detect leaks by the methods specified in Condition V.R.3.tt below, except as provided §61.242-1(c) and V.R.1.r and V.R.1.s above.
2) Checked by visual inspection each calendar week for indications of liquids dripping from the pump seal.

j. If an instrument reading of 10,000 ppm or greater is measured, a leak is detected. If there are indications of liquids dripping from the pump seal, a leak is detected. [§61.242-2(b)]

k. When a leak is detected, it shall be repaired as soon as practicable, but not later than 15 calendar days after it is detected, except as provided in Conditions V.R.3.dd through V.R.3.hh below. A first attempt at repair shall be made no later than 5 calendar days after each leak is detected. [§61.242-2(c)]

l. Each pump equipped with a dual mechanical seal system that includes a barrier fluid system is exempt from the requirements in Conditions V.R.3.i and V.R.3.j above, provided the following requirements are met: [§61.242-2(d)]
1) Each dual mechanical seal system is:
A. Operated with the barrier fluid at a pressure that is at all times greater than the pump stuffing box pressure; or
B. Equipped with a barrier fluid degassing reservoir that is routed to a process or fuel gas system or connected by a closed-vent system to a control device that complies with the requirements of §61.242-11; or
C. Equipped with a system that purges the barrier fluid into a process stream with zero VHAP emissions to atmosphere.
2) The barrier fluid is not in VHAP service and, if the pump is covered by standards under 40 CFR part 60, is not in VOC service.
3) Each barrier fluid system is equipped with a sensor that will detect failure of the seal system, the barrier fluid system, or both.
4) Each pump is checked by visual inspection each calendar week for indications of liquids

proposed

dripping from the pump seal.

A. If there are indications of liquid dripping from the pump seal at the time of the weekly inspection, the pump shall be monitored as specified in §61.245 to determine the presence of VOC and VHAP in the barrier fluid.

B. If the monitor reading (taking into account any background readings) indicates the presence of VHAP, a leak is detected. For the purpose of this paragraph, the monitor may be calibrated with VHAP, or may employ a gas chromatography column to limit the response of the monitor to VHAP, at the option of the owner or operator.

C. If an instrument reading of 10,000 ppm or greater (total VOC) is measured, a leak is detected.

5) Each sensor as described in Condition V.R.3.l.3) above is checked daily or is equipped with an audible alarm.

6) Based on design considerations and operating experience, the permittee determines:

A. Criteria applicable to the presence and frequency of drips and to the sensor that indicates failure of the seal system, the barrier fluid system, or both.

B. If indications of liquids dripping from the pump seal exceed the criteria established in Condition V.R.3.l.6)A above, or if, based on the criteria established in Condition V.R.3.l.6)A above, the sensor indicates failure of the seal system, the barrier fluid system, or both, a leak is detected.

C. When a leak is detected, it shall be repaired as soon as practicable, but no later than 15 calendar days after it is detected, except as provided in V.R.3.dd through V.R.3.hh below.

D. A first attempt at repair shall be made no later than five calendar days after each leak is detected.

m. Any pump that is designated, as described in V.R.4.g below, for no detectable emissions, as indicated by an instrument reading of less than 500 ppm above background, is exempt from the requirements in Conditions V.R.3.i, V.R.3.k and V.R.3.l above if the pump: [§61.242-2(e)]

1) Has no externally actuated shaft penetrating the pump housing,

2) Is demonstrated to be operating with no detectable emissions, as indicated by an instrument reading of less than 500 ppm above background, as measured by the method specified in §61.245(c), and

3) Is tested for compliance with Condition V.R.3.m.2) above initially upon designation, annually, and at other times requested by the Administrator and the Department.

n. If any pump is equipped with a closed-vent system capable of capturing and transporting any leakage from the seal or seals to a process or fuel gas system or to a control device that complies with the requirements of ConditionsV.R.3.ii through V.R.3.ss below and V.R.1.mm above, it is exempt from the requirements of Conditions V.R.3.i through V.R.3.m above. [§61.242-2(f)]

o. Any pump that is designated, as described in Condition V.R.4.h.1) below, as an unsafe-to-monitor pump is exempt from the monitoring and inspection requirements of Conditions V.R.3.i and V.R.3.l.4) through V.R.3.l.6) above if: [§61.242-2(g)]

1) The owner or operator of the pump demonstrates that the pump is unsafe-to-monitor because monitoring personnel would be exposed to an immediate danger as a consequence of complying with Condition V.R.3.i above; and

2) The owner or operator of the pump has a written plan that requires monitoring of the pump as frequently as practicable during safe-to-monitor times but not more frequently than the periodic monitoring schedule otherwise applicable, and repair of the equipment according to the procedures in Condition V.R.3.k above if a leak is detected.

proposed

p. After each pressure release, the pressure relief device shall be returned to a condition of no detectable emissions, as indicated by an instrument reading of less than 500 ppm above background, as soon as practicable, but no later than 5 calendar days after each pressure release, except as provided in Conditions V.R.3.dd through V.R.3.hh below. [§61.242-4(b)(1)]

q. No later than 5 calendar days after the pressure release, the pressure relief device shall be monitored to confirm the condition of no detectable emissions, as indicated by an instrument reading of less than 500 ppm above background, as measured by the method specified in Condition V.R.3.uu below. [§61.242-4(b)(2)]

r. Each valve shall be monitored monthly to detect leaks by the method specified in V.R.3.tt below and shall comply with Conditions V.R.3.s through V.R.3.v below, except as provided in Conditions V.R.3.w, V.R.3.x, and V.R.3.y below, V.R.1.nn through V.R.1.uu above and §61.242-1(c). [§61.242-7(a)]

s. If an instrument reading of 10,000 ppm or greater is measured, a leak is detected. [§61.242-7(b)]

t. Any valve for which a leak is not detected for 2 successive months may be monitored the first month of every quarter, beginning with the next quarter, until a leak is detected. If a leak is detected, the valve shall be monitored monthly until a leak is not detected for 2 successive months. [§61.242-7(c)]

u. When a leak is detected, it shall be repaired as soon as practicable, but no later than 15 calendar days after the leak is detected, except as provided in Conditions V.R.3.dd through V.R.3.hh below. A first attempt at repair shall be made no later than 5 calendar days after each leak is detected. [§61.242-7(d)]

v. First attempts at repair include, but are not limited to, the following best practices where practicable: [§61.242-7(e)]

1) Tightening of bonnet bolts;
2) Replacement of bonnet bolts;
3) Tightening of packing gland nuts; and
4) Injection of lubricant into lubricated packing.

w. Any valve that is designated, as described in Condition V.R.4.g.2) below, for no detectable emissions, as indicated by an instrument reading of less than 500 ppm above background, is exempt from the requirements of Condition V.R.3.r above if the valve: [§61.242-7(f)]
1) Has no external actuating mechanism in contact with the process fluid;
2) Is operated with emissions less than 500 ppm above background, as measured by the method specified in Condition V.R.3.uu below; and
3) Is tested for compliance with Condition V.R.3.w.2) above initially upon designation, annually, and at other times requested by the Administrator and the Department.

x. Any valve that is designated, as described in V.R.4.h.1) below, as an unsafe-to-monitor valve is exempt from the requirements of Condition V.R.3.r above if: [§61.242-7(g)]
1) The permittee of the valve demonstrates that the valve is unsafe to monitor because monitoring personnel would be exposed to an immediate danger as a consequence of complying with Condition V.R.3.r above; and,
2) The permittee of the valve has a written plan that requires monitoring of the valve as frequent

proposed

as practicable during safe-to-monitor times.

y. Any valve that is designated, as described in Condition V.R.4.h.2) below, as a difficult-to-monitor valve is exempt from the requirements of Condition V.R.3.r above if: [§61.242-7(h)]
1) The permittee of the valve demonstrates that the valve cannot be monitored without elevating the monitoring personnel more than 2 meters above a support surface;
2) The process unit within which the valve is located is an existing process unit; and
3) The permittee of the valve follows a written plan that requires monitoring of the valve at least once per calendar year.

z. If evidence of a potential leak is found by visual, audible, olfactory, or any other detection method at pressure relief devices in liquid service and connectors, the permittee shall follow either one of the following procedures, except as provided in §61.242-1(c): [§61.242-8]
1) The permittee shall monitor the equipment within 5 days by the method specified in V.R.3.tt below or §61.245(b) and shall comply with the requirements of Conditions V.R.3.aa through V.R.3.cc below.
2) The permittee shall eliminate the visual, audible, olfactory, or other indication of a potential leak.

aa. If an instrument reading of 10,000 ppm or greater is measured, a leak is detected. [§61.242-8(b)]

bb. When a leak is detected: [§61.242-8(c)]
1) It shall be repaired as soon as practicable, but not later than 15 calendar days after it is detected, except as provided in Conditions V.R.3.dd through V.R.3.hh below.
2) The first attempt at repair shall be made no later than 5 calendar days after each leak is detected.

cc. First attempts at repair include, but are not limited to, the best practices described under Condition V.R.3.v above. [§61.242-8(d)]

dd. Delay of repair of equipment for which leaks have been detected will be allowed if repair within 15 days is technically infeasible without a process unit shutdown. Repair of this equipment shall occur before the end of the next process unit shutdown. [§61.242-10(a)]

ee. Delay of repair of equipment for which leaks have been detected will be allowed for equipment that is isolated from the process and that does not remain in VHAP service. [§61.242-10(b)]

ff. Delay of repair for valves will be allowed if: [§61.242-10(c)]
1) The permittee demonstrates that emissions of purged material resulting from immediate repair are greater than the fugitive emissions likely to result from delay of repair, and
2) When repair procedures are affected, the purged material is collected and destroyed or recovered in a control device complying with Conditions V.R.3.ii through V.R.3.ss below and V.R.1.mm above.

gg. Delay of repair for pumps will be allowed if: [§61.242-10(d)]
1) Repair requires the use of a dual mechanical seal system that includes a barrier fluid system, and
2) Repair is completed as soon as practicable, but not later than 6 months after the leak was detected.

hh. Delay of repair beyond a process unit shutdown will be allowed for a valve if valve assembly

proposed

replacement is necessary during the process unit shutdown, valve assembly supplies have been depleted, and valve assembly supplies had been sufficiently stocked before the supplies were depleted. Delay of repair beyond the next process unit shutdown will not be allowed unless the next process unit shutdown occurs sooner than 6 months after the first process unit shutdown. [§61.242-10(e)]

ii. The permittee of closed-vent systems and control devices used to comply with provisions of 40 CFR Part 61, Subpart V shall comply with the provisions of Conditions V.R.1.n through V.R.1.mm above and V.R.3.i through V.R.3.ss below, except as provided in §61.242-1(c). [§61.242-11(a)]

jj. Vapor recovery systems (for example, condensers and absorbers) shall be designed and operated to recover the organic vapors vented to them with an efficiency of 95 percent or greater, or to an exit concentration of 20 parts per million by volume, whichever is less stringent. [§61.242-11(b)]

kk. Enclosed combustion devices shall be designed and operated to reduce the VHAP emissions vented to them with an efficiency of 95 percent or greater, or to an exit concentration of 20 parts per million by volume, on a dry basis, corrected to 3 percent oxygen, whichever is less stringent, or to provide a minimum residence time of 0.50 seconds at a minimum temperature of 760 °C. [§61.242-11(c)]

ll. The permittee shall monitor any control devices that are used to comply with the provisions of 40 CFR Part 61, Subpart V to ensure that they are operated and maintained in conformance with their design. [§61.242-11(e)]

mm. Except as provided in Conditions V.R.3.pp through V.R.3.rr below, each closed vent system shall be inspected according to the following procedures and schedule, as applicable. [§61.242-11(f)]
1) If the vapor collection system or closed vent system is constructed of hard-piping, the permittee shall comply with the following requirements:
   A. Conduct an initial inspection according to the procedures in Condition V.R.3.tt below; and
   B. Conduct annual visual inspections for visible, audible, or olfactory indications of leaks.
2) If the vapor collection system or closed vent system is constructed of ductwork, the permittee shall:
   A. Conduct an initial inspection according to the procedures in Condition V.R.3.tt below; and
   B. Conduct annual inspections according to the procedures in Condition V.R.3.tt below.

nn. Leaks, as indicated by an instrument reading greater than 500 parts per million by volume above background or by visual inspections, shall be repaired as soon as practicable except as provided for in Condition V.R.3.oo below. [§61.242-11(g)]
1) A first attempt at repair shall be made no later than 5 calendar days after the leak is detected.
2) Repair shall be completed no later than 15 calendar days after the leak is detected.

oo. Delay of repair of a closed vent system for which leaks have been detected is allowed if the repair is technically infeasible without a process unit shutdown, or if the permittee determines that emissions resulting from immediate repair would be greater than the fugitive emissions likely to result from delay of repair. Repair of such equipment shall be complete by the end of the next process unit shutdown. [§61.242-11(h)]

pp. If a vapor collection system or closed vent system is operated under a vacuum, it is exempt from the inspection requirements of Conditions V.R.3.mm.1)A through V.R.3.mm.2) above. [§61.242-11(i)]

qq. Any parts of the closed vent system that are designated, as described in Condition V.R.3.ss.1)

proposed

below, as unsafe-to-inspect are exempt from the inspection requirements of Conditions V.R.3.mm.1)A through V.R.3.mm.2) above if they comply with the following requirements: [§61.242-11(j)]

1) The permittee determines that the equipment is unsafe-to-inspect because inspecting personnel would be exposed to an imminent or potential danger as a consequence of complying with Conditions V.R.3.mm.1)A through V.R.3.mm.2) above; and
2) The permittee has a written plan that requires inspection of the equipment as frequently as practicable during safe-to-inspect times.

rr. Any parts of the closed vent system that are designated as difficult-to-inspect are exempt from the inspection requirements of Conditions V.R.3.mm.1)A through V.R.3.mm.2) above if they comply with the following requirements: [§61.242-11(k)]

1) The permittee determines that the equipment cannot be inspected without elevating the inspecting personnel more than 2 meters above a support surface; and
2) The permittee has a written plan that requires inspection of the equipment at least once every 5 years. A closed vent system is exempt from inspection if it is operated under a vacuum.

ss. The permittee shall record the following information: [§61.242-11(l)]

1) Identification of all parts of the closed vent system that are designated as unsafe-to-inspect, an explanation of why the equipment is unsafe-to-inspect, and the plan for inspecting the equipment.
2) Identification of all parts of the closed vent system that are designated as difficult-to-inspect, an explanation of why the equipment is difficult-to-inspect, and the plan for inspecting the equipment.
3) For each inspection during which a leak is detected, a record of the information specified in Condition V.R.4.e.
4) For each inspection conducted in accordance with Condition V.R.3.tt below during which no leaks are detected, a record that the inspection was performed, the date of the inspection, and a statement that no leaks were detected.
5) For each visual inspection conducted in accordance with Condition V.R.3.mm.1)B above during which no leaks are detected, a record that the inspection was performed, the date of the inspection, and a statement that no leaks were detected.

tt. Monitoring, as required in Conditions V.R.1.n through V.R.1.rr above, V.R.3.i through V.R.3.ss above, V.R.1.vv through V.R.1.zz above, V.R.1.i and V.R.1.j above and V.R.3.d through V.R.3.h above, shall comply with the following requirements: [§61.245(b)]

1) Monitoring shall comply with Method 21 of Appendix A of 40 CFR Part 60.
2) The detection instrument shall meet the performance criteria of Method 21.
3) The instrument shall be calibrated before use on each day of its use by the procedures specified in Method 21.
4) Calibration gases shall be:
   A. Zero air (less than 10 ppm of hydrocarbon in air); and
   B. A mixture of methane or n-hexane and air at a concentration of approximately, but less than, 10,000 ppm methane or n-hexane.
5) The instrument probe shall be traversed around all potential leak interfaces as close to the interface as possible as described in Method 21.

uu. When equipment is tested for compliance with or monitored for no detectable emissions, the permittee shall comply with the following requirements: [§61.245(c)]

proposed

1) The requirements of Conditions V.R.3.tt.1) through V.R.3.tt.4) above shall apply.
2) The background level shall be determined, as set forth in Method 21.
3) The instrument probe shall be traversed around all potential leak interfaces as close to the interface as possible as described in Method 21.
4) The arithmetic difference between the maximum concentration indicated by the instrument and the background level is compared with 500 ppm for determining compliance.

vv. Each piece of equipment within a process unit that can conceivably contain equipment in VHAP service is presumed to be in VHAP service unless the permittee demonstrates that the piece of equipment is not in VHAP service. For a piece of equipment to be considered not in VHAP service, it must be determined that the percent VHAP content can be reasonably expected never to exceed 10 percent by weight. For purposes of determining the percent VHAP content of the process fluid that is contained in or contacts equipment, procedures that conform to the methods described in ASTM Method D-2267 (incorporated by the reference as specified in §61.18) shall be used. [§61.245(d)(1)]

ww. The permittee may use engineering judgment rather than the procedures in Condition V.R.3.vv above to demonstrate that the percent VHAP content does not exceed 10 percent by weight, provided that the engineering judgment demonstrates that the VHAP content clearly does not exceed 10 percent by weight. When the permittee and the Department do not agree on whether a piece of equipment is not in VHAP service, however, the procedures in Condition V.R.3.vv above shall be used to resolve the disagreement. If the permittee determines that a piece of equipment is in VHAP service, the determination can be revised only after following the procedures in Condition V.R.3.vv above. [§61.245(d)(2)]

xx. Samples used in determining the percent VHAP content shall be representative of the process fluid that is contained in or contacts the equipment or the gas being combusted in the flare. [§61.245(d)(3)]

yy. The permittee shall inspect the Methanol tanks (V-400 and V-410) and the MEA/Methanol tank (V-430) daily in order to comply with Condition V.R.1.ccc above when the equipment is in operation. [Installation Permit 0052-I004a, Condition VA.2. and §2102.04.e]

4. Record Keeping Requirements:

a. The following information pertaining to the design of control equipment installed to comply with Conditions V.R.1.a through V.R.1.g above and Conditions V.R.3.a and V.R.3.b shall be recorded and kept in a readily accessible location. [§61.138(a)]

1) Detailed schematics, design specifications, and piping and instrumentation diagrams.
2) The dates and descriptions of any changes in the design specifications.

b. The following information pertaining to sources subject to Conditions V.R.1.a through V.R.1.e above and sources subject to Conditions V.R.1.f and V.R.1.g above shall be recorded and maintained for 2 years following each semiannual (and other) inspection and each annual maintenance inspection: [§61.138(b)]

1) The date of the inspection and the name of the inspector.
2) A brief description of each visible defect in the source or control equipment and the method and date of repair of the defect.
3) The presence of a leak, as measured using the method described in Condition V.R.3.uu above.

proposed

The record shall include the date of attempted and actual repair and method of repair of the leak.

4) A brief description of any system abnormalities found during the annual maintenance inspection, the repairs made, the date of attempted repair, and the date of actual repair.

c. Each permittee subject to the provisions of 40 CFR 61, Subpart V shall comply with the recordkeeping requirements of this section. The permittee of more than one process unit subject to the provisions of this 40 CFR Part 61, Subpart V may comply with the recordkeeping requirements for these process units in one recordkeeping system if the system identifies each record by each process unit. [§61.246(a)]

d. When each leak is detected as specified in Conditions V.R.3.i through V.R.3.k above, V.R.1.t through V.R.1.cc above, V.R.3.r through V.R.3.cc above and V.R.3.d through V.R.3.h above, the following requirements apply: [§61.246(b)]

1) A weatherproof and readily visible identification, marked with the equipment identification number, shall be attached to the leaking equipment.
2) The identification on a valve may be removed after it has been monitored for 2 successive months as specified in Condition V.R.3.t above and no leak has been detected during those 2 months.
3) The identification on equipment, except on a valve, may be removed after it has been repaired.

e. When each leak is detected as specified in Conditions V.R.3.i through V.R.3.k above, V.R.1.t through V.R.1.cc above, V.R.3.r through V.R.3.cc above and V.R.3.d through V.R.3.h above, the following information shall be recorded in a log and shall be kept for 2 years in a readily accessible location: [§61.246(c)]

1) The instrument and operator identification numbers and the equipment identification number.
2) The date the leak was detected and the dates of each attempt to repair the leak.
3) Repair methods applied in each attempt to repair the leak.
4) "Above 10,000" if the maximum instrument reading measured by the methods specified in Conditions V.R.3.tt through V.R.3.ww above after each repair attempt is equal to or greater than 10,000 ppm.
5) "Repair delayed" and the reason for the delay if a leak is not repaired within 15 calendar days after discovery of the leak.
6) The signature of the permittee (or designate) whose decision it was that repair could not be effected without a process shutdown.
7) The expected date of successful repair of the leak if a leak is not repaired within 15 calendar days.
8) Dates of process unit shutdowns that occur while the equipment is unrepaired.
9) The date of successful repair of the leak.

f. The following information pertaining to the design requirements for closed-vent systems and control devices described in V.R.3.ii through V.R.3.ss above and V.R.1.mm above shall be recorded and kept in a readily accessible location: [§61.246(d)]

1) Detailed schematics, design specifications, and piping and instrumentation diagrams.
2) The dates and descriptions of any changes in the design specifications.
3) A description of the parameter or parameters monitored, as required in Condition V.R.3.ll above, to ensure that control devices are operated and maintained in conformance with their design and an explanation of why that parameter (or parameters) was selected for the monitoring.
4) Periods when the closed-vent systems and control devices required in Conditions V.R.3.i

proposed

through V.R.3.k above, V.R.1.d through V.R.1.i above, V.R.3.p and V.R.3.q above, and V.R.1.dd through V.R.1.gg above are not operated as designed, including periods when a flare pilot light does not have a flame.

5) Dates of startups and shutdowns of the closed-vent systems and control devices required in Conditions V.R.3.i through V.R.3.k above, V.R.1.d through V.R.1.i above, V.R.3.p and V.R.3.q above, and V.R.1.dd through V.R.1.gg above.

g. The following information pertaining to all equipment to which a standard applies shall be recorded in a log that is kept in a readily accessible location: [§61.246(e)]

1) A list of identification numbers for equipment (except welded fittings) subject to the requirements of this 40 CFR Part 60, Subpart V.
2) A list of identification numbers for equipment that the permittee elects to designate for:
   A. No detectable emissions as indicated by an instrument reading of less than 500 ppm above background.
   B. The designation of this equipment for no detectable emissions shall be signed by the permittee.
3) A list of equipment identification numbers for pressure relief devices required to comply with Condition V.R.1.dd above.
4) The following information shall be recorded:
   A. The dates of each compliance test required in Conditions V.R.1.y above, V.R.1.dd above, V.R.3.p and V.R.3.q above, V.R.3.w above, and V.R.3.g above.
   B. The background level measured during each compliance test.
   C. The maximum instrument reading measured at the equipment during each compliance test.
5) A list of identification numbers for equipment in vacuum service.

h. The following information pertaining to all valves subject to the requirements of Conditions V.R.4.h and V.R.4.i below and to all pumps subject to the requirements of §61.242-2(g) shall be recorded in a log that is kept in a readily accessible location: [§61.246(f)]

1) A list of identification numbers for valves and pumps that are designated as unsafe to monitor, an explanation for each valve or pump stating why the valve or pump is unsafe to monitor, and the plan for monitoring each valve or pump.
2) A list of identification numbers for valves that are designated as difficult to monitor, an explanation for each valve stating why the valve is difficult to monitor, and the planned schedule for monitoring each valve.

i. The following information shall be recorded for valves complying with Conditions V.R.1.ss through V.R.1.uu above. [§61.246(g)]

1) A schedule of monitoring.
2) The percent of valves found leaking during each monitoring period.

j. The following information shall be recorded in a log that is kept in a readily accessible location: [§61.246(h)]

1) Design criterion required in V.R.1.y and V.R.3.e.4) above and an explanation of the design criterion; and
2) Any changes to this criterion and the reasons for the changes.

k. The following information shall be recorded in a log that is kept in a readily accessible location for use in determining exemptions as provided in the applicability section of 40 CFR 61, Subpart V and other specific subparts: [§61.246(i)]

1) An analysis demonstrating the design capacity of the process unit, and

proposed

2) An analysis demonstrating that equipment is not in VHAP service.

l. Information and data used to demonstrate that a piece of equipment is not in VHAP service shall be recorded in a log that is kept in a readily accessible location. [§61.246(j)]

m. The permittee shall maintain records of the monthly amount of coke oven gas, in mmcf, that is: [§2103.12.j]

1) Combusted in coke battery underfiring;
2) Combusted in boilers and other facilities at the Clairton Works;

n. The permittee shall maintain the following records regarding benzene in facility wastes in a readily accessible location at the facility site for a period not less than five (5) years from the date the information is recorded unless otherwise specified. This information shall include: [§61.356(a); §2103.12.j]

1) The identification of each waste stream at the facility subject 40 CFR Part 61, Subpart FF, and indicate whether or not the waste stream is controlled for benzene emissions in accordance with 40 CFR Part 61, Subpart FF. [§61.356(b)]
2) For each waste stream not controlled for benzene emissions in accordance with 40 CFR Part 61, Subpart FF, the records shall include all test results, measurements, calculations, and other documentation used to determine the following information for the waste stream: waste stream identification, water content, whether or not the waste stream is a process wastewater stream, annual waste quantity, range of benzene concentrations, annual average flow-weighted benzene concentration, and annual benzene quantity. [§61.356(b)(1)]

o. The permittee shall keep monthly records of the throughput, the types of liquids stored and the maximum true vapor pressure of the liquid as stored in storage tanks V-400, V-410 and V-430. [ACHD Installation Permit No. 0052-I004a; §2103.12.j]

p. For volatile organic compounds whose storage temperature is governed by ambient weather conditions, the vapor pressure under actual storage conditions shall be determined using a temperature which is representative of the average storage temperature for the hottest month of the year in which such storage takes place. [§2105.12(d)]

5. Reporting Requirements:

a. The permittee shall submit a statement in writing notifying the Administrator and the Department that the requirements of 40 CFR 61, Subparts L & V, have been implemented. The statement is to contain the following information for each source: [§61.138(e)]
1) Type of source (e.g., a light-oil sump or pump).
2) For equipment in benzene service, equipment identification number and process unit identification: percent by weight benzene in the fluid at the equipment; and process fluid state in the equipment (gas/vapor or liquid).
3) Method of compliance with the standard (e.g., ``gas blanketing," ``monthly leak detection and repair," or ``equipped with dual mechanical seals").

b. The permittee shall submit a report semiannually in accordance with General Condition III.15 above, which includes the following information: [§61.138(f)]

proposed

1) For sources subject to Conditions V.R.1.a through V.R.1.e above and sources subject to Conditions V.R.1.f and V.R.1.g above,
   A. A brief description of any visible defect in the source or ductwork,
   B. The number of leaks detected and repaired, and
   C. A brief description of any system abnormalities found during each annual maintenance inspection that occurred in the reporting period and the repairs made.
2) For equipment in benzene service subject to V.R.1.i above, information required by V.R.5.c
3) For each exhauster subject to V.R.1.i and V.R.1.j above and V.R.3.d through V.R.3.h above for each quarter during the semiannual reporting period,
   A. The number of exhausters for which leaks were detected as described in Conditions V.R.3.d and V.R.3.e.5) above,
   B. The number of exhausters for which leaks were repaired as required in Conditions V.R.3.d and V.R.3.e.6) above
   C. The results of performance tests to determine compliance with Condition V.R.3.g above conducted within the semiannual reporting period.
4) A statement signed by the permittee stating whether all provisions of 40 CFR Part 61, Subpart L, have been fulfilled during the semiannual reporting period.
5) Revisions to items reported according to Condition V.R.5.a above if changes have occurred since the initial report or subsequent revisions to the initial report.

c. The semiannual report in Condition V.R.5.b above shall also include the following information: [§61.247(b)]

1) Process unit identification.
2) For each month during the semiannual reporting period,
   A. Number of valves for which leaks were detected as described in V.R.3.s above or V.R.1.ee through V.R.1.gg above.
   B. Number of valves for which leaks were not repaired as required in V.R.3.u above.
   C. Number of pumps for which leaks were detected as described in V.R.3.j above.
   D. Number of pumps for which leaks were not repaired as required in V.R.3.k above.
   E. Number of compressors for which leaks were detected as described in V.R.1.v above.
   F. Number of compressors for which leaks were not repaired as required in V.R.1.w above.
   G. The facts that explain any delay of repairs and, where appropriate, why a process unit shutdown was technically infeasible.
   H. Dates of process unit shutdowns which occurred within the semiannual reporting period.
   I. The results of all performance tests and monitoring to determine compliance with no detectable emissions and with Conditions V.R.1.nn through V.R.1.aaa above conducted within the semiannual reporting period.

d. An owner or operator electing to comply with the provisions of Conditions V.R.1.nn through V.R.1.aaa above shall notify the Administrator and the Department of the alternative standard selected 90 days before implementing either of the provisions. [§61.247(d)]

e. If the total annual benzene quantity from facility waste is less than 10 Mg/yr (11 ton/yr) but is equal to or greater than 1 Mg/yr (1.1 ton/yr), then the permittee shall submit to the Administrator and the Department a report that updates the following information: [§61.357(a)(1)-(3) and (c)]

1) Total annual benzene quantity from facility waste determined in accordance with Condition V.R.2.b above.
2) A table identifying each waste stream and whether or not the waste stream will be controlled

proposed

for benzene emissions in accordance with the requirements of 40 CFR 61, Subpart FF.

3) For each waste stream identified as not being controlled for benzene emissions in accordance with the requirements of 40 CFR 61, Subpart FF, the following information shall be added to the table:
   A. Whether or not the water content of the waste stream is greater than 10 percent;
   B. Whether or not the waste stream is a process wastewater stream, product tank drawdown, or landfill leachate;
   C. Annual waste quantity for the waste stream;
   D. Range of benzene concentrations for the waste stream;
   E. Annual average flow-weighted benzene concentration for the waste stream; and
   F. Annual benzene quantity for the waste stream.

4) The report shall be submitted annually and whenever there is a change in the process generating the waste stream that could cause the total annual benzene quantity from facility waste to increase to 10 Mg/yr (11 ton/yr) or more. If the information in the annual report required by Conditions V.R.5.e.1) through V.R.5.e.3) above is not changed in the following year, the permittee may submit a statement to that effect. [§61.357(c)]

f. The types of liquid stored in storage tanks V-400, V-410 and V-430, and the 12-month rolling totals of the throughput shall be reported to the Department on a semi-annual basis. [ACHD Installation Permit No. 0052-I004a; §2103.12.k.1]

g. The permittee shall submit notification of intent to store any new material in storage tanks V-400, V-410 and V-430 other than methanol (V-400 and V-410) or MEA/methanol (V-430), to the Department a minimum of ten (10) working days prior to the intended store date. This notification shall at a minimum include the Material Safety Data Sheet and emission calculation for the new material. [ACHD Installation Permit No. 0052-I004a; §2103.12.k.1]

6. Work Practice Standards:

a. The By-Products Plant Clean Coke Oven Gas Blanketing System and all process units blanketed by this system shall be properly maintained and operated according to good engineering and air pollution control practices at all times. [§2105.06; RACT Plan 234]

b. At no time shall the permittee operate the Coke By-Product Recovery Plant unless it is properly operated and maintained according to good engineering and air pollution control practices by performing regular maintenance with the exception of actions to mitigate emergency conditions. [RACT IP 0052-I020b, condition V.D.1.b; RACT Order No. 234, Condition 1.1; 25 Pa Code §129.99; §2103.12.a.2.B]

b. At no time shall the permittee operate the Coke By-Product Recovery Plant unless the clean coke oven gas blanketing system is being properly maintained and operated at all times while the plant process units blanketed by the system are emitting VOCs, with the exception of emergency or planned outages, repairs or maintenance. [RACT IP 0052-I020b, condition V.D.1.e; RACT Order No. 234, Condition 1.1; 25 Pa Code §129.99; §2103.12.a.2.B]

c. The permittee shall comply with each applicable emission limitation, work practice standard, and operation and maintenance requirement of 40 CFR Part 61, Subpart V - *National Emission Standards for Equipment Leaks (Fugitive Emission Sources)*. [RACT IP 0052-I020b, condition V.D.1.f; RACT Order No. 234, Condition 1.1; 25 Pa Code §129.99; §2103.12.a.2.B]

proposed

7. Additional Requirements:

The following definitions in 40 CFR 61, Subparts L, V and FF and 40 CFR 63, Subpart L are incorporated by reference into this permit:

40 CFR 61.131
40 CFR 61.241
40 CFR 61.341

PERMIT SHIELD IN EFFECT

proposed

S. No. 1 and No. 2 Continuous Barge Unloaders: P022 and P023

Process Description: Continuous unloading of coal from barge
Facility ID: P022 and P023
Max. Design Rate: 4,598,635 tons of coal per year, each
Capacity: 4,598,635 tons of coal per year, each
Raw Materials: Coal
Control Device: NA

1. Restrictions:

a. The permittee shall not operate, or allow to be operated, the continuous barge unloaders in such manner that the opacity of visible emissions from the coal unloading operation, excluding uncombined water: [§2105.40.a]

1) Equal or exceed an opacity of 20% for a period or periods aggregating more than three (3) minutes in any 60 minute period; or,
2) Equal or exceed an opacity of 60% at any time.

b. The permittee shall not conduct, or allow to be conducted, any materials handling operation in such manner that emissions from such operation are visible at or beyond the property line of the affected source. [§2104.05]

c. The permittee shall not cause to be discharged into the atmosphere from the No. 2 Continuous Barge Unloader gases which exhibit 20 percent opacity or greater [§60.254(a)].

d. The opacity standards in condition V.S.1.c shall apply at all times except during periods of startup, shutdown, malfunction, and as otherwise provided in 40CFR Part 60 Subpart Y. [§60.11(c)]

2. Testing Requirements:

a. An owner or operator of each affected facility that commenced construction, reconstruction, or modification on or before April 28, 2008, must conduct all performance tests required by §60.8 to demonstrate compliance with the applicable emission standards using the methods identified in §60.257. [§60.255(a)].

b. Compliance with opacity standards in condition V.S.1.c shall be determined by conducting observations in accordance with Method 9 in appendix A of subpart 60 or any alternative method that is approved by the Administrator and the Department, or as provided in §60.11(e)(5). For purposes of determining initial compliance, the minimum total time of observations shall be 3 hours (30 6-minute averages) for the performance test or other set of observations (meaning those fugitive-type emission sources subject only to an opacity standard). [§60.11(b)].

c. The Department reserves the right to require additional emissions testing sufficient to assure compliance with the terms and conditions of this permit. Such testing shall be performed in accordance with Site Level Condition IV.14 above and Article XXI §2108.02. [§2103.12.h.1]

3. Monitoring Requirements:

The permittee shall perform annual visible emission observations for a period of one hour for the No. 1 and

proposed

No. 2 Continuous Barge Unloaders to determine compliance with Condition V.S.1.a above. [§2103.12.i]

4. Record Keeping Requirements:

The permittee shall record the annual visible emission observations. [§2103.12.j]

5. Reporting Requirements:

The permittee shall submit semiannual reports to the Department and the annual visible emission observations in accordance with General Condition III.15 above. [§2103.12.k]

6. Work Practice Standards:

At all times, including periods of startup, shutdown, and malfunction, owners and operators shall, to the extent practicable, maintain and operate any affected facility including associated air pollution control equipment in a manner consistent with good air pollution control practice for minimizing emissions. Determination of whether acceptable operating and maintenance procedures are being used will be based on information available to the Administrator and the Department which may include, but is not limited to, monitoring results, opacity observations, review of operating and maintenance procedures, and inspection of the source [§60.11(d)].

7. Additional Requirements:

a. For the purpose of submitting compliance certifications or establishing whether or not a person has violated or is in violation of any standard in this part, nothing in this part shall preclude the use, including the exclusive use, of any credible evidence or information, relevant to whether a source would have been in compliance with applicable requirements if the appropriate performance or compliance test or procedure had been performed [§60.11(g)].

b. The permittee shall not build, erect, install, or use any article, machine, equipment or process, the use of which conceals an emission which would otherwise constitute a violation of an applicable standard. Such concealment includes, but is not limited to, the use of gaseous diluents to achieve compliance with an opacity standard or with a standard which is based on the concentration of a pollutant in the gases discharged to the atmosphere [§60.12].

PERMIT SHIELD IN EFFECT

proposed

T. Pedestal Crane Unloader: P024

Process Description: Unload coal from barge
Facility ID: P024
Max. Design Rate: 2,792,250 tons of coal per year
Capacity: 2,792,250 tons of coal per year
Raw Materials: Coal
Control Device: NA

1. Restrictions:

a. The permittee shall not operate, or allow to be operated, the pedestal crane unloader in such manner that the opacity of visible emissions from the coal unloading operation, excluding uncombined water: [§2105.40.a]
   1) Equal or exceed an opacity of 20% for a period or periods aggregating more than three (3) minutes in any 60 minute period; or,
   2) Equal or exceed an opacity of 60% at any time.

b. The permittee shall not conduct, or allow to be conducted, any materials handling operation in such manner that emissions from such operation are visible at or beyond the property line of the affected source. [§2104.05]

2. Testing Requirements:

The Department reserves the right to require additional emissions testing sufficient to assure compliance with the terms and conditions of this permit. Such testing shall be performed in accordance with Site Level Condition IV.14 above and Article XXI §2108.02. (§2103.12.h.1)

3. Monitoring Requirements

The permittee shall perform annual visible emission observations for a period of one (1) hour for the Pedestal Crane Unloader to determine compliance with Condition V.T.1.a above. [§2103.12.i]

4. Record Keeping Requirements:

The permittee shall record the annual visible emission observations. [§2103.12.j]

5. Reporting Requirements:

The permittee shall submit semiannual reports to the Department and the annual visual emission observations in accordance with General Condition III.15.d above. [§2103.12.k]

PERMIT SHIELD IN EFFECT

proposed

U. Coal Transfer: P026

Process Description:	Unload coal from barge
Facility ID:	P026
Max. Design Rate:	8,240,605 tons of coal per year
Capacity:	8,240,605 tons of coal per year
Raw Materials:	Coal
Control Device:	Dust suppressant(s)

As identified above, Process P026 consists of the following number and type of equipment: Coal conveyor and transfer towers; deflector plates, hoppers and chutes installed on belts 1A and 1B

1. Restrictions:

a. The permittee shall not operate, or allow to be operated, the Coal Transfer Station (P026) in such manner that the opacity of visible emissions from the coal unloading operation, excluding uncombined water: [§2104.40.a]
   1) Equal or exceed an opacity of 20% for a period or periods aggregating more than three (3) minutes in any 60 minute period; or,
   2) Equal or exceed an opacity of 60% at any time.

b. The permittee shall maintain and operate the deflector plates, hoppers and chutes installed on belts 1A and 1B. [§2104.02.e.4]

c. The permittee shall not conduct, or allow to be conducted, any materials handling operation in such manner that emissions from such operation are visible at or beyond the property line of the affected source. [§2104.05]

2. Testing Requirements:

The Department reserves the right to require additional emissions testing sufficient to assure compliance with the terms and conditions of this permit. Such testing shall be performed in accordance with Site Level Condition IV.14 above and Article XXI §2108.02. (§2103.12.h.1)

3. Monitoring Requirements:

The permittee shall perform annual visible emission observations for a period of one (1) hour for the Coal Transfer Station (P026) to determine compliance with Condition V.U.1.a above [§2103.12.i]

4. Record Keeping Requirements:

The permittee shall record the annual visual emission observations. [§2103.12.j]

5. Reporting Requirements:

The permittee shall submit semiannual reports to the Department and the annual visual emission observations in accordance with General Condition III.15.d above.[§2103.12.k]

PERMIT SHIELD IN EFFECT

proposed

V. No. 1 Primary and Secondary Pulverizers and No. 2 Primary and Secondary Pulverizers: P027 & P028 and P029 & P030

Process Description: Pulverize coal
Facility ID: P027, P028, P029 and P030
Max. Design Rate: P027 & P028**:** 4,598,635 tons of coal per year, each; P029 & P030: 3,641,605 tons of coal per year, each.
Capacity: P027 & P028**:** 4,598,635 tons of coal per year, each; P029 & P030: 3,641,605 tons of coal per year, each.
Raw Materials: Coal
Control Device: Feed chutes to the pulverizers are enclosed and dust suppressant applied to the coal prior to entering the pulverizers.

1. Restrictions:

a. The permittee shall not operate, or allow to be operated, the No. 1 Primary Coal Pulverizer in such manner that the opacity of visible emissions from the coal pulverizing operation, excluding uncombined water: [§2104.01.a]

1) Equal or exceed an opacity of 20% for a period or periods aggregating more than three (3) minutes in any 60 minute period; or,
2) Equal or exceed an opacity of 60% at any time.

b. The permittee shall not operate, or allow to be operated, any primary or secondary coal pulverizer listed below unless there is installed on such process an emission control device, nor shall any person operate, or allow to be operated, any pulverizer listed below in such manner that emissions of PM-10 from such process exceed at any time the applicable rate set forth below for a volume source for ambient air quality impact dispersion modeling purposes, or if the required emission control device results in the process becoming a point source for ambient air quality impact dispersion modeling purposes, a rate which results in no more adverse ambient air quality impact than the applicable rate set forth below for a volume source.

This requirement shall apply to the sum of all stack emissions from the coal pulverizers listed below including all emissions from any air pollution control device outlet(s) associated with the pulverizers. All fugitive emissions from the coal pulverizers shall be included in the sum of all stack emissions unless the stack emissions can be accurately measured and all fugitive emissions do not exceed the standards established by §2104.01 or any alternative standard(s) established for such source pursuant to §2104.01. [§2104.02.e]

proposed

TABLE V-V-1 – Pulverizer Emission Limitations

SPECIFIC PROCESS SOURCE	VOLUME SOURCE MAXIMUM ALLOWABLE EMISSIONS RATE Gr/Ton of Coal	Particulate Matter Tons/yr
#1 Primary Coal Pulverizer	5.17	1.70
#1 Secondary Coal Pulverizer	11.86	3.90
#2 Primary Coal Pulverizer	8.26	2.15
#2 Secondary Coal Pulverizer	11.02	2.89

c. The permittee shall install a direct feed chute and distribution plough at the #2 secondary pulverizer and enclose all coal feed chutes on the pulverzers. [§2104.02.e.1 through e.4]

d. The permittee shall use dust suppressant (e.g. chemical, oil, or water suppressant to minimize emissions) on coal prior to entry into any pulverizer. [§2104.02.e.1 through e.4]

e. The permittee shall not conduct, or allow to be conducted, any materials handling operation in such manner that emissions from such operation are visible at or beyond the property line of the U. S. Steel Clairton Works. [§2104.05]

2. Testing Requirements:

The Department reserves the right to require additional emissions testing sufficient to assure compliance with the terms and conditions of this permit. Such testing shall be performed in accordance with Site Level Condition IV.14 above and Article XXI §2108.02. (§2103.12.h.1)

3. Monitoring Requirements:

The permittee shall monitor the total amount and type of dust suppressant applied to the coal at all of the pulverizers on a monthly basis. [§2103.12.i]

4. Record Keeping Requirements:

The permittee shall record and maintain monthly records of the tons of coal processed through the Primary and Secondary Coal Pulverizers. [§2103.12.j]

5. Reporting Requirements:

The permittee shall submit reports semiannually to the Department as required in General Condition III.15.d above and the type and total amount of dust suppressant applied al all of the pulverizers. [§2103.12.k]

PERMIT SHIELD IN EFFECT

proposed

W. Surge Bins and Bunkers: P031

Process Description:	Pulverized Coal Storage (No. 1 unit surge bin, No. 2 unit surge bin, and Bunkers 1,3,5,7 and B.)
Facility ID:	P031
Max. Design Rate:	8,240,605 tons of coal per year
Capacity:	8,240,605 tons of coal per year
Raw Materials:	Pulverized coal
Control Device:	NA

1. Restrictions:

a. The permittee shall not operate, or allow to be operated, the pulverized coal surge bins and bunkers (P031) in such manner that the opacity of visible emissions from the coal unloading operation, excluding uncombined water: [§2104.40.a]

1) Equal or exceed an opacity of 20% for a period or periods aggregating more than three (3) minutes in any 60 minute period; or,
2) Equal or exceed an opacity of 60% at any time.

b. The permittee shall not conduct, or allow to be conducted, any materials handling operation in such manner that emissions from such operation are visible at or beyond the property line of the affected source. [§2104.05]

2. Testing Requirements:

The Department reserves the right to require additional emissions testing sufficient to assure compliance with the terms and conditions of this permit. Such testing shall be performed in accordance with Site Level Condition IV.14 above and Article XXI §2108.02. (§2103.12.h.1)

3. Monitoring Requirements:

The permittee shall perform annual visible emission observations for a period of one (1) hour at the Coal Surge Bins and Bunkers (P031) to determine compliance with Condition V.W.1.a.1) above. [§2103.12.i]

4. Record Keeping Requirements:

The permittee shall record the annual visual emission observations. [§2103.12.j]

5. Reporting Requirements:

The permittee shall submit semiannual reports to the Department and the annual visible emission observations in accordance with General Condition III.15.d above. [§2103.12.k]

PERMIT SHIELD IN EFFECT

proposed

X. Coke Transfer: P032 and P033

Process Description:	Transfer of coke via belt conveyors from the coke wharf to the screening stations (P032 for Batteries 1-3 & B and P033 for Batteries 13-15 and 19&20)
Facility ID:	P032 and P033
Max. Design Rate:	P032**:** 3,568,240 tons of coke per year; P033: 2,825,830 tons of coke per year
Capacity:	P03**:** 3,568,240 tons of coke per year; P033: 2,825,830 tons of coke per year
Raw Materials:	Metallurgical coke
Control Device:	NA

1. Restrictions:

a. The permittee shall not operate, or allow to be operated, the coke transfer operations (P032 and P033) in such manner that the opacity of visible emissions from the coal unloading operation, excluding uncombined water: [§2104.40.a]

1) Equal or exceed an opacity of 20% for a period or periods aggregating more than three (3) minutes in any 60 minute period; or,
2) Equal or exceed an opacity of 60% at any time.

b. The permittee shall not conduct, or allow to be conducted, any materials handling operation in such manner that emissions from such operation are visible at or beyond the property line of the affected source. [§2104.05]

2. Testing Requirements:

The Department reserves the right to require additional emissions testing sufficient to assure compliance with the terms and conditions of this permit. Such testing shall be performed in accordance with Site Level Condition IV.14 above and Article XXI §2108.02. (§2103.12.h.1)

3. Monitoring Requirements

The permittee shall perform annual visible emission observations for a period of one (1) hour for the Coke Transfer operations (P032 & P033) to determine compliance with Condition V.X.1.a above. [§2103.12.i]

4. Record Keeping Requirements:

The permittee shall record the annual visual emission observations. [§2103.12.j]

5. Reporting Requirements:

The permittee shall submit semiannual reports to the Department and the annual visual emission observations in accordance with General Condition III.15.d above. [§2103.12.k]

PERMIT SHIELD IN EFFECT

proposed

Y. No. 1 and No. 2 Coke Screening Stations: P034 and P035

Process Description: Screening of coke (P034 for Batteries 1-3 and P035 for Batteries 13-15 and 19 & 20)
Facility ID: P034 & P035
Max. Design Rate: P034**:** 2,411,190 tons of coke per year; P035: 2,825,830 tons of coke per year
Capacity: P034**:** 2,411,190 tons of coke per year; P035: 2,825,830 tons of coke per year
Raw Materials: Metallurgical coke
Control Device: NA

As identified above, Process P034 consists of the following number and type of equipment: Coke screening (P034 for Batteries 1-3 and P035 for Batteries 13-15 and 19 & 20) Screening loadout (P034 for Batteries 1-3 and P035 for Batteries 13-15 and 19 & 20)

1. Restrictions:

a. The permittee shall not operate, or allow to be operated, the No. 1 or No. 2 Coke Screening Station (P034 & P035) in such manner that the opacity of visible emissions from the screening operation, excluding uncombined water: [§2104.40.a]
   1) Equal or exceed an opacity of 20% for a period or periods aggregating more than three (3) minutes in any 60 minute period; or,
   2) Equal or exceed an opacity of 60% at any time.

b. The permittee shall not operate or allow to be operated, the No. 1 or No. 2 Coke Screening Station unless each screening station, at a minimum, is located and maintained within the enclosure in existence as of February 1, 1994. [§2104.02.g]

c. The permittee shall not conduct, or allow to be conducted, any materials handling operation in such manner that emissions from such operation are visible at or beyond the property line of the affected source. [§2104.05]

2. Testing Requirements:

The Department reserves the right to require additional emissions testing sufficient to assure compliance with the terms and conditions of this permit. Such testing shall be performed in accordance with Site Level Condition IV.14 above and Article XXI §2108.02. (§2103.12.h.1)

3. Monitoring Requirements

The permittee shall perform annual visible emission observations for a period of one (1) hour for the No. 1 and No. 2 Coke Screening Stations (P034 & P035) to determine compliance with Condition V.Y.1.a above. [§2103.12.i]

4. Record Keeping Requirements:

The permittee shall record the coke screening stations (P034 & P035) annual visible emission observations. [§2103.12.j]

proposed

5. Reporting Requirements:

The permittee shall submit semiannual reports to the Department and the annual visual emission observations in accordance with General Condition III.15.d above.[§2103.12.k]

PERMIT SHIELD IN EFFECT

proposed

Z. Boom Conveyor (coal pile destocking): P041

Process Description: Coal transfer operations (belt conveyors) from storage piles to barges
Facility ID: P041
Max. Design Rate: 5,584,500 tons of coal per year
Capacity: 5,584,500 tons of coal per year
Raw Materials: Coal
Control Device: NA

1. Restrictions:

a. The permittee shall not operate, or allow to be operated, the boom conveyor (P041) in such manner that the opacity of visible emissions excluding uncombined water: [§2104.01.a]

1) Equal or exceed an opacity of 20% for a period or periods aggregating more than three (3) minutes in any 60 minute period; or,
2) Equal or exceed an opacity of 60% at any time.

b. The permittee shall not conduct, or allow to be conducted, any materials handling operation in such manner that emissions from such operation are visible at or beyond the property line of the affected source. [§2104.05]

2. Testing Requirements:

None, except as may be provided elsewhere in this permit.

3. Monitoring Requirements:

The permittee shall perform monthly visible emission observations of the boom conveyor operations (P041) to determine compliance with Condition V.Z.1.a above. [§2103.12.i]

4. Record Keeping Requirements:

The permittee shall record the monthly tons of coal transferred by the boom conveyor and the monthly visual emission observations. [§2103.12.j]

5. Reporting Requirements:

The permittee shall submit semiannual reports to the Department in accordance with General Condition III.15.d above of the monthly tons of coal transferred by the boom conveyor and the monthly visual emission observations. [§2103.12.k]

PERMIT SHIELD IN EFFECT

proposed

AA. Coal and Coke Recycle Screening: P042

Process Description: Screening of recycle coal and coke
Facility ID: P042
Max. Design Rate: 262,800 tons of coal and/or coke per year
Capacity: 30 tons of coal and/or coke per hour
Raw Materials: Coal and metallurgical coke
Control Device: NA

1. Restrictions:

a. The permittee shall not operate, or allow to be operated, the coal and coke recycle screening operation (P042) in such manner that the opacity of visible emissions from the screening operation, excluding uncombined water: [§2104.01.a]

1) Equal or exceed an opacity of 20% for a period or periods aggregating more than three (3) minutes in any 60 minute period; or,
2) Equal or exceed an opacity of 60% at any time.

b. The permittee shall not operate, or allow to be operated, the Coal and Coke Recycle Screening (P042) operation, in such manner that emissions of particulate matter from such process exceed 11.2 pounds per hour (lb/hr) at any time as determined by the formula set forth in §2104.02.c. This emission limitation shall apply to the sum of all stack emissions from process P042 process including all emissions from any air pollution control device outlet(s) associated with process P042. All fugitive emissions from process P042 shall be included in the sum of all stack emissions for purposes of this emission limitation, unless the stack emissions can be accurately measured and all fugitive emissions do not exceed the standards established by §2104.01 or any alternative standard(s) established for process P042 pursuant to §2104.01. [§2104.02.c.3]

2. Testing Requirements:

None, except as may be provided elsewhere in this permit.

3. Monitoring Requirements:

The permittee shall perform annual visible emission observations for a period of one (1) hour for the coal and coke recycle screening operations (P042) to determine compliance with Condition V.AA.1.a above. [§2103.12.i]

4. Record Keeping Requirements:

The permittee shall record the recycle screening station annual visible emission observations. [§2103.12.j]

5. Reporting Requirements:

The permittee shall submit semiannual reports to the Department in accordance with General Condition III.15.d above the annual visible emission observations. [§2103.12.k]

PERMIT SHIELD IN EFFECT

proposed

BB. Peters Creek Coke Screening: P043

Process Description: Screening of metallurgical coke
Facility ID: P043
Max. Design Rate: 3,066,000 tons of coke per year
Capacity: 350 tons of coke per hour
Raw Materials: Metallurgical coke
Control Device: NA

1. Restrictions:

a. The permittee shall not operate, or allow to be operated, the coke screening operation (P043) in such manner that the opacity of visible emissions from the screening operation, excluding uncombined water: [§2104.01.a]

1) Equal or exceed an opacity of 20% for a period or periods aggregating more than three (3) minutes in any 60 minute period; or,
2) Equal or exceed an opacity of 60% at any time.

b. The permittee shall not operate, or allow to be operated, the Peters Creek Coke Screening operation, in such manner that emissions of particulate matter from such process exceed 31.3 pounds per hour (lb/hr) at any time as determined by the formula set forth in §2104.02.c. This emission limitation shall apply to the sum of all stack emissions from coke screening (P043) including all emissions from any air pollution control device outlet(s) associated with process P043. All fugitive emissions from process P043 shall be included in the sum of all stack emissions for purposes of this emission limitation unless the stack emissions can be accurately measured and all fugitive emissions do not exceed the standards established by §2104.01 of this Article or any alternative standard(s) established for process P043 pursuant to §2104.01 of this Article. [§2104.02.c.3]

2. Testing Requirements:

None, except as may be provided elsewhere in this permit.

3. Monitoring Requirements:

The permittee shall perform annual visible emission observations for a period of one hour for the coke screening (P043) operations to determine compliance with Condition V.BB.1.a above. [§2103.12.i]

4. Record Keeping Requirements:

The permittee shall record the annual visible emission observations. [§2103.12.j]

5. Reporting Requirements:

The permittee shall submit semiannual reports of the visual emission observations to the Department in accordance with General Condition III.15.d above. [§2103.12.k]

PERMIT SHIELD IN EFFECT

proposed

CC. No. 4 Coke Screening Station: P049

Process Description:	Screening of metallurgical coke and lead-out to railcars and trucks
Facility ID:	P049
Max. Design Rate/Units:	3,371,618 tons of coke per year
Capacity:	3,371,618 tons of coke per year
Raw Materials:	Metallurgical coke
Control Device(s):	Two (2) module pulse-jet baghouse (25,000 ACFM or 22,956.52 DSCFM, each module). One module is a spare.

1. Restrictions:

a. After completion of the installation and achievement of acceptable operation of the No. 4 Coke Screening Station, the permittee shall at no time, operate or allow to be operated, the No. 4 Screening Station unless particulate emissions from the coke screening and furnace coke loadout operations are exhausted to the baghouse. The baghouse and capture hoods shall be in place and operating, treating particulate matter emissions from the No. 4 Coke Screening Station according to the following specifications while in operation: [§2103.12.h.6; IP 0052-I013, Condition V.A.1.a]

1) The baghouse shall be equipped with automatic cleaning controls and instrumentation that shall continuously measure the pressure drop across the baghouse to within 5 percent of the measuring span of the device;

2) The normal operating differential pressure drop range across the baghouse shall be determined within 60 days after the startup of the screening station; and

3) The baghouse control system shall capture all of the particulate matter emissions generated from the screening operation, based on the designed 90% capture efficiency.

b. A dust suppressant shall be added to the coke breeze prior to discharge into trucks. The dust suppressant shall be diluted with water according to the manufacturer's recommendations. [§2103.12.h.6; IP 0052-I013, Condition V.A.1.b]

c. The permittee shall only operate one baghouse module at a time, and use the remaining one (1) as a spare. If the permittee wishes to operate both modules, the permittee shall contact the Department. [§2103.12.h.6; IP 0052-I013, Condition V.A.1.c]

d. The permittee shall not operate or allow to be operated the No. 4 Coke Screening Station baghouse in such manner that the opacity of visible emissions from the stack, excluding uncombined water: [§2104.01.a; §60.252(c); §2103.12.h.6; IP 0052-I013, Condition V.A.1.d]

1) Equal or exceed an opacity of 10% for a period or periods aggregating more than three (3) minutes in any 60 minute period; or

2) Equal or exceed an opacity of 20% at any time.

e. While the baghouse is in operation, the PM concentration in the baghouse outlet (S051) shall not exceed 0.005 grains per dry standard cubic foot (gr/dscf). [§2103.12.h.6; IP 0052-I013, Condition V.A.1.e]

proposed

f. The permittee shall not conduct, or allow to be conducted, any materials handling operation in such manner that emissions from such operation are visible at or beyond the property line of the affected source. [§2104.05; §2103.12.h.6; IP 0052-I013, Condition V.A.1.f]

g. The baghouse for the No. 4 Screening Station shall be properly installed, maintained and operated consistent with good air pollution control practice, and in accordance with the manufacturer's recommendations and practices at all times that coke is screened, conveyed, and loaded out. [§2105.03; §2103.12.h.6; IP 0052-I013, Condition V.A.1.g]

h. Emissions from the outlet (S051) of the No. 4 Coke Screening Station baghouse shall not exceed the following limitations at any time: [§2105.03; §2103.12.h.6; IP 0052-I013, Condition V.A.1.h]

TABLE V-CC-1
Emission Limitation

POLLUTANT	HOURLY EMISSION LIMIT (lb/hr)	ANNUAL EMISSION LIMIT (tons/year)[1]
PM_{10} (filterable)	2.0	8.6
$PM_{2.5}$ (filterable)	2.0	8.6

[1]A year is defined as any 12 consecutive months.

2. Testing Requirements:

The Department reserves the right to require emissions testing sufficient to assure compliance with the terms and conditions of this permit. Such testing shall be performed in accordance with §2108.02. [§2103.12.h.1]

3. Monitoring Requirements:

a. The No. 4 Coke Screening Station Baghouse shall be provided with instrumentation to continuously monitor and record the pressure drop across the baghouse when treating particulate emissions from the screening and furnace coke loadout operations. [§2103.12.h.6; §2103.12.i; §2103.12.h.6; IP 0052-I013, Condition V.A.3.a]

b. If the pressure drop exceeds the normal range as specified in Condition V.CC.1.a.2) above, the permittee shall initiate an investigation and implement corrective action within 24 hours. [§2103.12.h.6; §2103.12.i; IP 0052-I011, Condition V.A.3.b]

c. The permittee shall inspect the No. 4 Coke Screening Station baghouse on a weekly basis to ensure compliance with Condition V.CC.1.a. [§2103.12.h.6; §2103.12.i; IP 0052-I013, Condition V.B.3.c]

4. Record Keeping Requirements:

a. The results of inspections required by Condition V.CC.3.c above shall be recorded weekly and the differential pressure drop across the No. 4 Screening Station baghouse shall be recorded daily. [§2103.12.j; IP 0052-I013, Condition V.A.4.a]

proposed

b. Episodes of noncompliance with Conditions V.CC.1.a and V.CC.3.a above and corrective action taken shall be recorded upon occurrence. [§2103.12.h.6; §2103.12.j; IP 0052-I013, Condition V.A.4.b]

c. All records shall be retained by the facility for at least five (5) years. These records shall be made available to the Department upon request for inspection and/or copying. [§2103.12.h.6; §2103.12.j; IP 0052-I013, Condition V.B.3.a]

5. Reporting Requirements:

a. The permittee shall report to the Department semiannually, in accordance with General Condition III.15 above all instances of non-compliance with the conditions of this permit along with all corrective action taken to restore the subject equipment to compliance. If all the terms and conditions of this permit are complied with during the reporting period, then no report is necessary under this permit condition. [§2103.12.k; IP 0052-I013, Condition V.A.5.a]

b. Reporting instances of non-compliance in accordance with condition V.CC.5.a above, does not relieve the permittee of the requirement to report breakdowns in accordance with Site Level Condition IV.9 above, if appropriate. [§2103.12.k]

6. Work Practice Standard:

None except as provided elsewhere.

7. Additional Requirements:

None except as provided elsewhere

PERMIT SHIELD IN EFFECT

proposed

DD. Light Oil Barge Loading: P044a

Process Description: Loading light oil, tar and tar distillates into barges, trucks and rail cars
Facility ID: P044a
Max. Design Rate: 55,000,000 gallons per year (1,310,000 barrels per year)
Capacity: 55,000,000 gallons per year (1,310,000 barrels per year)
Raw Materials: Light Oil (55,000,000 gal/yr), Tar and Tar Distillates (55,000,000 gal/yr)
Control Device: Vapor recovery system for barge and truck loading

1. Restrictions:

a. The permittee shall equip each terminal with a vapor collection system that is designed to collect HAP vapors displaced from marine tank vessels during marine tank vessel loading operations and to prevent HAP vapors collected at one loading berth from passing through another loading berth to the atmosphere, except for those commodities exempted under §63.560(d). [§2103.12.h.6; §63.562(b)(1)(i)]

b. The permittee shall limit marine tank vessel loading operations to those vessels that are equipped with vapor collection equipment that is compatible with the terminal's vapor collection system. [§2103.12.h.6; §63.562(b)(1)(ii)]

c. The permittee shall limit marine tank vessel loading operations to those vessels that are vapor tight and to those vessels that are connected to the vapor collection system. [§2103.12.h.6; §63.562(b)(1)(iii)]

d. The permittee shall reduce captured HAP emissions from marine tank vessel loading operations by 97 weight-percent, as determined using methods in §63.565 (d) and (l). [§2103.12.h.6; §63.562(b)(2)]

e. The following procedures shall be used to determine compliance with the emissions limits under Condition V.DD.1.a above: [§2103.12.h.6; §63.563(a)]

1) *Vent stream by-pass requirements for the terminal's vapor collection system.*

A. In accordance with Condition V.DD.1.a above, each valve in the terminal's vapor collection system that would route displaced vapors to the atmosphere, either directly or indirectly, shall be secured closed during marine tank vessel loading operations either by using a car-seal or a lock-and-key type configuration, or the by-pass line from the valve shall be equipped with a flow indicator, except for those valves used for pressure/vacuum relief, analyzers, instrumentation devices, sampling, and venting for maintenance. Marine tank vessel loading operations shall not be performed with open by-pass lines.

B. Repairs shall be made to valves, car-seals, or closure mechanisms no later than 15 days after a change in the position of the valve or a break in the car-seal or closure mechanism is detected or no later than prior to the next marine tank vessel loading operation, whichever is later.

2) *Ship-to-shore compatibility of vapor collection systems.* Following the date on which the initial performance test is completed, marine tank vessel loading operations must be performed only if the marine tank vessel's vapor collection equipment is compatible to the terminal's vapor collection system; marine tank vessel loading operations must be performed only when the

proposed

marine tank vessel's vapor collection equipment is connected to the terminal's vapor collection system, as required in Condition V.DD.1.b above.

3) *Vapor-tightness requirements of the marine vessel.* The permittee shall use the procedures in paragraph V.DD.1.e.3)A, V.DD.1.e.3)B, V.DD.1.e.3)C or V.DD.1.e.3)D below to ensure that marine tank vessels are vapor tight, as required in Condition V.DD.1.c above. [§2103.12.h.6; §63.563(a)(4)]

A. *Pressure test documentation for determining vapor tightness of the marine vessel.* The owner or operator of a marine tank vessel shall provide a copy of the vapor-tightness pressure test documentation described in Condition V.DD.4.c below for each marine tank vessel prior to loading. The date of the test listed in the documentation must be within the preceding 12 months. The permittee must check vapor-tightness pressure test documentation for marine tank vessels loaded at positive pressure. [§2103.12.h.6; §63.563(a)(4)(i)]

B. *Leak test documentation for determining vapor tightness of the marine vessel*. If no documentation of the vapor tightness pressure test as described in paragraph V.DD.1.e.3)A above is available, the owner or operator of a marine tank vessel shall provide the leak test documentation described in Condition V.DD.4.c below for each marine tank vessel prior to loading. The date of the test listed in the documentation must be within the preceding 12 months, and the test must be conducted in accordance with procedures in §63.565(c)(2). If the marine tank vessel has failed its most recent vapor-tightness leak test at that terminal, the owner or operator of the non-vapor-tight marine tank vessel shall provide documentation that the leaks detected during the previous vapor-tightness test have been repaired and documented with a successful vapor-tightness leak test described in §63.565(c)(2) conducted during loading. If the owner or operator of the marine tank vessel can document that repair is technically infeasible without cleaning and gas freeing or dry-docking the vessel, the owner or operator of the affected source may load the marine tank vessel. Following the date on which the initial performance test is completed, the permittee must check the vapor-tightness leak test documentation for marine tank vessels loaded at positive pressure. [§2103.12.h.6; §63.563(a)(4)(ii)]

C. *Leak test performed during loading using Method 21 for determining vapor tightness of the marine vessel.* If no documentation of vapor tightness as described in paragraphs V.DD.1.e.3)A or V.DD.1.e.3)B above is available, the owner or operator of a marine tank vessel shall perform a leak test of the marine tank vessel during marine tank vessel loading operation using the procedures described in§63.565(c)(2). [§2103.12.h.6; §63.563(a)(4)(iii)]

i) If no leak is detected, the owner or operator of a marine tank vessel shall complete the documentation described in Condition V.DD.4.c below prior to departure of the vessel.

ii) If a leak is detected, the owner or operator of the marine tank vessel shall document the vapor-tightness failure for the marine tank vessel prior to departure of the vessel. The leaking component shall be repaired prior to the next marine tank vessel loading operation at a controlled terminal unless the repair is technically infeasible without cleaning and gas freeing or dry-docking the vessel. If the owner or operator of the vessel provides documentation that repair of such equipment is technically infeasible without cleaning and gas freeing or dry-docking the vessel, the equipment responsible for the leak will be excluded from future Method 21 tests until repairs are effected. A copy of this documentation shall be maintained by the owner or operator of the affected source. Repair of the equipment responsible for the leak shall occur the next time the

proposed

vessel is cleaned and gas freed or dry-docked. For repairs that are technically feasible without dry-docking the vessel, the permittee shall not load the vessel again unless the marine tank vessel owner or operator can document that the equipment responsible for the leak has been repaired.

D. *Negative pressure loading.* The permittee shall ensure that a marine tank vessel is loaded with the product tank below atmospheric pressure (i.e., at negative gauge pressure). The pressure shall be measured between the facility's vapor connection and its manual isolation valve, and the measured pressure must be below atmospheric pressure. Following the date on which the initial performance test is completed, marine tank vessel loading operations for non-vapor-tight vessels must be performed below atmospheric pressure (i.e., at negative gauge pressure) in the product tank. [§2103.12.h.6; §63.563(a)(4)(iv)]

f. Emissions from the Light Oil Barge Loading facility (P044) shall not exceed the limits listed in Table V-DD-1 at any time: [§2103.12.a.2.D; §2103.12.g]

TABLE V-DD-1
Emission Limitations for Light Oil Barge Loading facility (P043)

POLLUTANT	HOURLY EMISSION LIMIT (lb/hr)	ANNUAL EMISSION LIMIT (tons/year)*
Volatile Organic Compound	1.99	8.74

*A year is defined as any consecutive 12-month period

2. Testing Requirements:

The Department reserves the right to require additional emissions testing sufficient to assure compliance with the terms and conditions of this permit. Such testing shall be performed in accordance with Site Level Condition IV.14 above and Article XXI §2108.02. [§2103.12.h.1]

3. Monitoring Requirements:

a. The permittee shall perform the following procedures for detecting and repairing leaks in the vapor collection systems: [§2103.12.h.6; §63.563(c)]

1) The permittee shall inspect and monitor all ductwork and piping and connections to vapor collection systems and control devices once each calendar year using Method 21.
2) If evidence of a potential leak is found by visual, audible, olfactory, or any other detection method, all ductwork and piping and connections to vapor collection systems and control devices shall be inspected to the extent necessary to positively identify the potential leak and any potential leaks shall be monitored within 5 days by Method 21. Each detection of a leak shall be recorded, and the leak shall be tagged until repaired.
3) When a leak is detected, a first effort to repair the vapor collection system and control device shall be made within 15 days or prior to the next marine tank vessel loading operation, whichever is later.

b. The permittee complying with Condition V.DD.1.e.3)D above that load vessels at less than atmospheric pressure (i.e., negative gauge pressure) shall measure and record the loading pressure. The permittee shall install, calibrate, maintain, and operate a recording pressure measurement device (magnehelic gauge or equivalent device) and an audible and visible alarm system that is

proposed

activated when the pressure vacuum specified in Condition V.DD.1.e.3)D above is not attained. The permittee shall place the alarm system so that it can be seen and heard where cargo transfer is controlled. The permittee shall verify the accuracy of the pressure device once each calendar year with a reference pressure monitor (traceable to National Institute of Standards and Technology (NIST) standards or an independent pressure measurement device dedicated for this purpose). [§2103.12.h.6; §63.564(d)]

4. Record Keeping Requirements:

a. The permittee shall maintain in an accessible location on site an engineering report describing in detail the vent system, or vapor collection system, used to vent each vent stream to a control device. This report shall include all valves and vent pipes that could vent the stream to the atmosphere, thereby bypassing the control device, and identify which valves are car-sealed opened and which valves are car-sealed closed. [§2103.12.h.6; §63.567(f)]

b. The permittee shall keep the vapor-tightness documentation required under Condition V.DD.1.e.3) above on file at the source in a permanent form available for inspection. [§2103.12.h.6; §63.567(h)]

c. The permittee shall maintain a documentation file for each marine tank vessel loaded at that source to reflect current test results as determined by the appropriate method in §63.565(c). Updates to this documentation file shall be made at least once per year. The permittee shall include, as a minimum, the following information in this documentation: [§2103.12.h.6; §63.567(i)]

1) Test title;
2) Marine vessel owner and address;
3) Marine vessel identification number;
4) Loading time, according to V.DD.1.e.3)B or V.DD.1.e.3)C above, if appropriate;
5) Testing location;
6) Date of test;
7) Tester name and signature;
8) Test results from §63.565(c) as appropriate;
9) Documentation provided under V.DD.1.e.3)B and V.DD.1.e.3)C.ii) above showing that the repair of leaking components attributed to a failure of a vapor-tightness test is technically infeasible without dry-docking the vessel; and
10) Documentation that a marine tank vessel failing a pressure test or leak test has been repaired.

d. When each leak of the vapor collection system is detected and repaired as specified in V.DD.3.a above, the following information required shall be maintained for 5 years: [§2103.12.h.6; §63.567(k)]

1) Date of inspection;
2) Findings (location, nature, and severity of each leak);
3) Leak determination method;
4) Corrective action (date each leak repaired, reasons for repair interval); and
5) Inspector name and signature.

5. Reporting Requirements:

a. The permittee shall submit semiannual reports in accordance with General Condition III.15.d of

proposed

the updated documentation file for each marine tank vessel that fails a pressure or leak test as required in Condition V.DD.4.c. The report shall contain the following information [§2103.12.k]:

1) Test title;
2) Marine vessel owner and address;
3) Marine vessel identification number;
4) Loading time, according to V.DD.1.e.3)B or V.DD.1.e.3)C above, if appropriate;
5) Testing location;
6) Date of test;
7) Tester name and signature;
8) Test results from §63.565(c) as appropriate;
9) Documentation provided under V.DD.1.e.3)B and V.DD.1.e.3)C.ii) above showing that the repair of leaking components attributed to a failure of a vapor-tightness test is technically infeasible without dry-docking the vessel; and
10) Documentation that a marine tank vessel failing a pressure test or leak test has been repaired.

b. The permittee shall submit to the Administrator and Department, according to General Conditions III.4 and III.12 above, a notification of compliance status, signed by the responsible official who shall certify its accuracy, attesting to whether the marine tank vessel loading operation has complied with the relevant standard in Conditions V.DD.1.a through V.DD.1.c above. The notification shall list: [§2103.12.h.6; §63.9(h)]

1) The methods that were used to determine compliance;
2) The results of any performance tests, continuous monitoring system (CMS) performance evaluations, and/or other monitoring procedures or methods that were conducted;
3) The methods that will be used for determining continuing compliance, including a description of monitoring and reporting requirements and test methods;
4) The type and quantity of hazardous air pollutants emitted by the source (or surrogate pollutants if specified in the relevant standard), reported in units and averaging times and in accordance with the test methods specified;
5) A description of the air pollution control equipment (or method) for each emission point, including each control device (or method) for each hazardous air pollutant and the control efficiency (percent) for each control device (or method); and
6) A statement by the permittee of the as to whether the Light Oil Barge Loading (P044) has complied with the relevant standard or other requirements I 40 CFR 63, Subpart Y.

6. Work Practice Standards:

a. At all times, including periods of startup, shutdown, and malfunction, the permittee shall operate and maintain the light oil loading facility, including associated air pollution control equipment, in a manner consistent with safety and good air pollution control practices for minimizing emissions. Determination of whether acceptable operation and maintenance procedures are being used will be based on information available to the Department which may include, but is not limited to, monitoring results, review of operation and maintenance procedures, review of operation and maintenance records, and inspection of the source. [§2103.12.h.6; §63.562(e)]

b. The Department will determine compliance with design, equipment, work practice, or operational emission standards by evaluating the permittees conformance with operation and maintenance requirements. [§2103.12.h.6; §63.562(e)(1)]

c. The permittee shall develop and implement a written operation and maintenance plan that describes

proposed

in detail a program of corrective action for varying (i.e., exceeding baseline parameters) air pollution control equipment and monitoring equipment, based on monitoring requirements in § 63.564, used to comply with these emissions standards. The plan shall also identify all routine or otherwise predictable continuous monitoring system (thermocouples, pressure transducers, continuous emissions monitors (CEMS), etc.) variances. [§2103.12.h.6; §63.562(e)(2)]

1) The plan shall specify procedures (preventive maintenance) to be followed to ensure that pollution control equipment and monitoring equipment functions properly and variances of the control equipment and monitoring equipment are minimal.
2) The plan shall identify all operating parameters to be monitored and recorded for the air pollution control device as indicators of proper operation and shall establish the frequency at which the parameters will be monitored (see § 63.564).
3) The permittee shall incorporate a standardized inspection schedule for each component of the control device used to comply with the emissions standards in § 63.562(b). To satisfy the requirements of this Condition, the permittee may use the inspection schedule recommended by the vendor of the control system or any other technical publication regarding the operation of the control system.
4) The permittee shall develop and implement a continuous monitoring system (CMS) quality control program. The permittee shall develop and submit to the Department for approval upon request a site-specific performance evaluation test plan for the CMS performance evaluation required in §63.8(e) of subpart A of this part. Each quality control program shall include, at a minimum, a written protocol that describes procedures for initial and any subsequent calibration of the CMS; determination and adjustment of the calibration drift of the CMS; preventive maintenance of the CMS, including spare parts inventory; data recording, calculations, and reporting; and accuracy audit procedures, including sampling and analysis methods. The permittee shall maintain records of the procedures that are part of the quality control program developed and implemented for CMS.

d. Based on the results of the determination made under Condition V.DD.6.c above, the Department may require the permittee to make changes to the operation and maintenance plan for that source. Revisions may be required if the plan: [§2103.12.h.6; §63.562(e)(3)]
1) Does not address a variance of the air pollution control equipment or monitoring equipment that has occurred that increases emissions;
2) Fails to provide for operation during a variance of the air pollution control equipment or the monitoring equipment in a manner consistent with safety and good air pollution control practices; or
3) Does not provide adequate procedures for correcting a variance of the air pollution control equipment or monitoring equipment as soon as reasonable.

e. If the operation and maintenance plan fails to address or inadequately addresses a variance event at the time the plan was initially developed, the permittee shall revise the operation and maintenance plan within 45 working days after such an event occurs. The revised plan shall include procedures for operating and maintaining the air pollution control equipment or monitoring equipment during similar variance events and a program for corrective action for such events. [§2103.12.h.6; §63.562(e)(4)]

f. The operation and maintenance plan shall be developed by the source's compliance date. The permittee shall keep the written operation and maintenance plan on record to be made available for inspection, upon request, by the Department for the life of the source. In addition, if the operation and maintenance plan is revised, the permittee shall keep previous (i.e., superseded) versions of the

proposed

plan on record to be made available for inspection upon request by the Department for a period of 5 years after each revision to the plan. [§2103.12.h.6; §63.562(e)(5)]

g. To satisfy the requirements of the operation and maintenance plan, the permittee may use the source's standard operating procedures (SOP) manual, an Occupational Safety and Health Administration (OSHA) plan, or other existing plans provided the alternative plans meet the requirements of this section and are made available for inspection when requested by the Department. [§2103.12.h.6; §63.562(e)(6)]

PERMIT SHIELD IN EFFECT

proposed

EE. Light Oil Truck Loading: P044b

Process Description:	Light Oil Truck Loading
Facility ID:	P044b
Max. Design Rate/Units:	49,315 gal/ day of light oil
Capacity:	49,315 gal/ day of light oil
Raw Materials:	Light Oil
Control Device(s):	Vapor Recovery/Balancing System

1. Restrictions:

a. The light oil truck loading shall not exceed 49,315 gallons per day averaging over a calendar month or 18 million gallons per year. [§2104.05; §2105.03; IP 0052-I016, Condition V.A.1.a]

b. The vapor recovery/balancing system shall be designed and operated to route the VOC and organic HAP vapors displaced from the light oil truck loading to the facility's combustion units to be incinerated. [§2104.05; §2105.03; IP 0052-I016, Condition V.A.1.b]

c. The light oil containing organic liquids shall be loaded from storage tanks when the vapor collection systems are connected to the combustion units. [§2104.05; §2105.03; IP 0052-I016, Condition V.A.1.c]

d. The vapor recovery/balancing system shall achieve a minimum of 98% destruction efficiency. [§2104.05; §2105.03; I P0052-I016, Condition V.A.1.d]

e. Emissions from the light oil truck loading operation shall not exceed the limitations in Table V-EE-1: [§2104.05; §2105.03; IP 0052-I016, Condition V.A.1.e]

Table V-EE-1 – Light Oil Loading Emission Limitations

Pollutant	LBS/HR	TPY [1]
Volatile Organic Compound	0.14	0.60
Benzene	0.08	0.37

[1]A year is defined as any 12 consecutive months.

2. Testing Requirements:

The Department reserves the right to require additional emissions testing sufficient to assure compliance with the terms and conditions of this permit. Such testing shall be performed in accordance with Article XXI §2108.02. [§2103.12.h.1]

3. Monitoring Requirements:

The permittee shall monitor the truck loading activity to ensure that the truck is vapor tight. [§2104.05; §2105.03; IP 0052-I016, Condition V.A.3.a]

proposed

4. Record Keeping Requirements:

a. The permittee shall keep records of the quantity of light oil loaded: [§2103.12.j; IP 0052-I016, Condition V.A.4.a]

b. The permittee shall keep a 12-month rolling total (in gallons) of light oil, and calculate on a monthly basis the estimated emissions of VOC and HAP from the light oil, based on the average temperature during the month. [§2103.12.j; IP 0052-I016, Condition V.A.4.b]

c. The permittee shall record all instances of non-compliance with the conditions of this permit upon occurrence along with corrective action taken to restore compliance. [§2103.12.j]

d. All records shall be retained by the facility for at least five (5) years. These records shall be made available to the Department upon request for inspection and/or copying. [§2103.12.j.2]

5. Reporting Requirements:

a. The permittee shall report the following information semiannually to the Department in accordance with General Condition III.15. The reports shall contain, at a minimum, the following information: [§2103.12.k; IP 0052-I016, Condition V.A.5.a]

1) Calendar dates covered in the reporting period;
2) Loading information required under conditions V.EE.4.a and V.EE.4.b; and
3) Non-compliance information required to be recorded by condition V.EE.4.c above.

b. Reporting instances of non-compliance in accordance with condition V.EE.5.a.3) above, does not relieve the permittee of the requirement to report breakdowns in accordance with Site Level Condition IV.9, if appropriate. [§2103.12.k.1]

6. Work Practice Standard:

a. All light oil loading equipment shall be properly operated and maintained at all times in a way as not to cause air pollution, with the exception of activities to mitigate emergency conditions. [§2105.03]

b. All solvent/solution cleaning rags shall be stored in sealed containers prior to disposal [§2105.03]

c. All containers or tanks containing light oil shall be closed at all times while not directly in use [§2105.03]

d. All spills of solution shall be cleaned up as expeditiously as possible [§2105.03]

PERMIT SHIELD IN EFFECT

proposed

FF. Coal Tar Truck & Railcar Loading: P044d

Process Description:	Coal Crude Tar Truck/Rail Loading
Facility ID:	P044d
Max. Design Rate/Units:	130,000 gal average/ day of coal crude tar per day to truck or rail car
Capacity:	130,000 gal average/ day of coal crude tar per day to truck or rail car
Raw Materials:	Coal Crude Tar
Control Device(s):	None

1. Restrictions

a. Transfer of crude tar to rail car or truck shall not exceed 130,000 gallons per day average over a calendar month or 47.45 million gallons per year. [§2103.12.a.2.B; IP 0052-I015, Condition V.B.1.a]

b. Emissions from the crude tar loading operation shall not exceed the limitations in Table V-FF-1: [§2103.12.a.2.B; IP 0052-I015, Condition V.B.1.b]

Table V-FF-1 – Crude Tar Loading Emission Limitations

Pollutant	LBS/HR	TPY [1]
Volatile Organic Compound	1.39	6.07
Benzene	0.73	3.18
Naphthalene	0.35	1.55
Toluene	0.16	0.69

[1]A year is defined as any 12 consecutive months.

2. Testing Requirements:

The Department reserves the right to require additional emissions testing sufficient to assure compliance with the terms and conditions of this permit. Such testing shall be performed in accordance with Article XXI §2108.02. [§2103.12.h.1]

3. Monitoring Requirements:

None, except as provided elsewhere.

4. Record Keeping Requirements:

a. For each load of crude tar, the permittee shall keep and maintain the following records: [§2103.12.j; §2103.12.a.2.B; IP 0052-I015, Condition V.B.4.a]
   1) Type of material loaded;
   2) Quantity (in gallons);
   3) Type of loading (truck or rail car); and
   4) Temperature.

proposed

b. The permittee shall keep a 12-month rolling total (in gallons) of crude tar loaded, and calculate on a monthly basis the estimated emissions of VOC and HAP from the crude tar, based on the average temperature during the month. [§2103.12.j; [§2103.12.a.2.B; IP 0052-I015, Condition V.B.4.b]

c. The permittee shall keep and maintain records of any compositional analyses of materials loaded. [§2103.12.j]

d. The permittee shall record all instances of non-compliance with the conditions of this permit upon occurrence along with corrective action taken to restore compliance. [§2103.12.j; IP 0052-I015, Condition V.B.4.c]

e. All records shall be retained by the facility for at least five (5) years. These records shall be made available to the Department upon request for inspection and/or copying. [§2103.12.j.2]

5. Reporting Requirements:

a. The permittee shall report the following information semiannually to the Department in accordance with General Condition III.15. The reports shall contain, at a minimum, the following information: [§§2103.12.k]

1) Calendar dates covered in the reporting period;
2) The date of the latest temperature monitor calibration;
3) Loading information required under conditions V.FF.4.a.1) and V.FF.4.c;
4) The 12-month rolling totals of each type of material loaded required under condition V.FF.4.c; and
5) Non-compliance information required to be recorded by condition V.FF.4.d above above.

b. Reporting instances of non-compliance in accordance with condition V.FF.5.a.5) above, does not relieve the permittee of the requirement to report breakdowns in accordance with Site Level Condition IV.9, if appropriate. [§§2103.12.k.1]

6. Work Practice Standard:

a. All crude tar loading equipment shall be properly operated and maintained at all times in a way as not to cause air pollution, with the exception of activities to mitigate emergency conditions. [§2105.03; §2102.12.h.6]

b. All solvent/solution cleaning rags shall be stored in sealed containers prior to disposal [§2102.12.h.6]

c. All containers or tanks containing crude tar shall be closed at all times while not directly in use. [§2102.12.h.6]

d. All spills of solution shall be cleaned up as expeditiously as possible. [§2102.12.h.6]

PERMIT SHIELD IN EFFECT

proposed

GG. Boiler No. 1: B001

Process Description: Steam production
Facility ID: B001
Max. Design Rate: 760 MMBtu/hr (Heat Input)
Capacity: 760 MMBtu/hr (Heat Input)
Raw Materials: Desulfurized coke oven gas and natural gas
Control Device: NA

1. Restrictions:

a. Only coke oven gas and natural gas shall be combusted in Boiler B001. [§2103.12.a.2]

b. The permittee shall not operate, or allow to be operated, any source in such manner that unburned coke oven gas is emitted into the open air. In addition, the permittee shall not flare, mix, or combust coke oven gas, or allow such gas to be flared, mixed or combusted unless the gas meets the requirements of Site Level Condition IV.33. [§2105.21.h; §2105.21.h.4]

c. Emissions of NO_X from Boiler No. 1 shall not exceed 0.48 lb/MMBtu, with the exception of actions to mitigate emergency situations. The NO_X emissions shall be determined by a thirty (30) day rolling average and a twelve (12) month rolling average Continuous Emission Monitoring (CEM) data for the lbs/MMBtu and tons/yr emission limitation respectively. [RACT IP 0052-I020b, Condition V.A.1.b; 25 Pa Code §129.99; §2102.04.b.5; §2105.06.b.5)

d. Boiler No. 1 (B001) shall have properly maintained and operated Continuous Monitoring Systems or approved alternatives for continuously monitoring the NO_X concentration in the exhaust gas, meeting all the requirements of §2108.03 at all times with the exception of emergency or planned outages, repairs or maintenance. [§2105.06; RACT Plan 234]

e. Except for fuel emergencies of limited duration with prior Department approval, the permittee shall not operate, or allow to be operated, Boiler No. 1 in such manner that emissions of particulate matter exceed 0.02 pounds per million BTUs of actual heat input at any time, regardless of the type of fuel used [§2104.02.a.4; §2104.02.a.5]

f. The permittee shall not operate, or allow to be operated, Boiler No. 1 (B001) in such manner that the opacity of visible emissions, excluding uncombined water: [§2104.01.a]
   1) Equal or exceed an opacity of 20% for a period or periods aggregating more than three (3) minutes in any 60 minute period; or,
   2) Equal or exceed an opacity of 60% at any time.

g. Condition V.GG.1.f above shall not apply to visible emissions resulting solely from the cold start of Boiler B001 if such cold start has been reported as required by §2108.01.d. [§2104.b.3]

proposed

h. **Emissions Limitations:** Emissions from Boiler B001 shall not exceed the limits listed in Table V-GG-1 at any time: [§2105.06.b.5; §2105.03; RACT IP 0052-I020b, Condition V.A.1.b; SO_2 SIP IP 0052-I017, Condition V.A.1.b]

TABLE V-GG-1 – Boiler 1 Emission Limitations

POLLUTANT	HOURLY EMISSION LIMIT (lb/hr)	ANNUAL EMISSION LIMIT (tons/year)[1]
Particulate Matter	15.20	66.58
PM_{10}	15.20	66.58
NO_X	364.80*	1,598
CO	59.90	262.19
VOC	0.69	3.01

[1]A year is defined as any consecutive 12-month period.
*Based on a 30-day rolling average.

i. The permittee shall comply with the SO_2 emissions in condition IV.33.g [§2105.21.h; SO_2 SIP IP 0052-I017, Condition V.A.1.b

2. Testing Requirements:

a. The permittee shall perform Relative Accuracy Test Audits (RATA) of the NO_X CEMS as specified in 25 PA Code §§139.101 - 139.111. [§2108.03]

b. Emissions of NO_X may be determined by the CEMs required in Condition V.GG.3.a below in lieu of a stack test to determine compliance with the emissions limitation of Conditions V.GG.1.c and V.GG.1.h above. [§2103.12.i; §2103.12.h.1; §2108.02; §2108.03; RACT IP 0052-I020b, Condition V.A.2.a; 25 Pa Code §129.100]

c. The permittee shall have sulfur dioxide (SO_2) and carbon monoxide (CO) emissions stack tests performed on the boiler stacks at least once every two years as required by Article XXI §2108.02.b to demonstrate compliance with condition V.GG.1.h. SO_2 emission tests shall be conducted according to Method 6, 6A, 6B, or 6C as specified in 40 CFR 60, Appendix A. The permittee shall submit a stack test protocol to the Department for approval at least 45 days prior to the test date(s). [§2108.02.b; §2108.02.e; SO_2 SIP IP 0052-I017, Condition V.A.1.b]

d. The permittee shall perform emissions tests for PM, condensable PM on Boiler No. 1 to demonstrate compliance with condition V.GG.1.h. Testing shall be repeated at least once every two years from the date of the most recent valid test. Testing shall be conducted in accordance with approved EPA Methods in Appendix A of 40 CFR Part 60, Article XXI §2108.02, or another Department approved test method. The permittee shall submit a stack test protocol to the Department for approval at least 45 days prior to the test date(s). [§2103.12.h.1; §2108.02.b, §2108.02.e]

e. The Department reserves the right to require additional emissions testing sufficient to assure compliance with the terms and conditions of this permit. Such testing shall be performed in accordance with Site Level Condition IV.14 above and Article XXI §2108.02. [§2103.12.h.1]

proposed

3. Monitoring Requirements:

a. The permittee shall install, operate, and maintain continuous nitrogen oxides monitoring systems and other monitoring systems to convert data to required reporting units in compliance with 25 PA Code §§139.101-139.111 relating to requirements for continuous in-stack monitoring for stationary sources. [§2108.03.b.2; RACT IP 0052-I020b, Condition V.A.3.a]

b. The volume of coke oven gas and natural gas combusted in Boiler No. 1 and the H_2S content of the coke oven gas shall be monitored and recorded on a daily basis (midnight to midnight). [§2103.12.i]

4. Record Keeping Requirements:

a. The permittee shall maintain all appropriate records to demonstrate compliance with the requirements of §2105.06. Such records shall provide sufficient data and calculations to clearly demonstrate that all requirements of §2105.06 are met. The permittee shall record and maintain such data and information required to determine compliance for the facility in a time frame consistent with the averaging period of the requirements of both §2105.06 and RACT IP 0052-I020b. [2102.04.b.5; §2108.03.d, §2105.06; 25 Pa Code §129.100; RACT IP0052-I020b. Condition V.A.4.a]

1) An identification of each instance during the reporting period during which NO_X emissions exceeded the applicable emission limitation rates in Conditions V.GG.1.c and V.GG.1.h and an identification of the reasons, if known, for such exceedance. The averaging period used for making such identification shall correspond to the averaging period specified in condition V.GG.1.c above.
2) An identification of each period during which the continuous emission monitoring system was inoperative, except for zero and span drift checks, the reasons therefore, and the nature of repairs or adjustments performed or to be performed.
3) An identification of calibrations, zero and span drift checks, and other quality assurance procedures.

b. The permittee shall maintain records of the daily amounts of coke oven gas and natural gas combusted and the H_2S content of the coke oven gas. [§2103.12.j]

c. The permittee shall record all instances of non-compliance with the conditions of this permit upon occurrence along with corrective action taken to restore compliance. [§2103.12.j]

d. All records shall be retained by the facility for at least five (5) years. These records shall be made available to the Department upon request for inspection and/or copying. [§2103.12.j.2; RACT IP 0052-I020b, Condition V.A.4.c]

5. Reporting Requirements:

a. The permittee shall submit a semiannual report to the Department in accordance with the requirements of General Condiiton III.15 above that lists each exceedance of the 30-day rolling average emission limitation for NO_X of 0.48 lb/MMBtu and the 12-month rolling average emission limitation for NO_X of 1,598 tons/yr. The date of each exceedance shall also be listed. [§2103.12.k]

b. The permittee shall report the following information semi-annually to the Department in accordance with General Condition III.15 above. The reports shall contain all required information

proposed

for the time period of the report. The reports shall be postmarked by the 30th day following the end of the reporting period. [RACT IP 0052-I020b, Condition V.A.5.a; §2103.12.k; §2103.12.a.2.B]

1) Total monthly Fuel Combustion Unit, fuel use, per fuel type;
2) Cold start information; and
3) Non-compliance information required to be recorded by Condition V.GG.4.c above

c. The permittee shall submit the information identified in conditions V.GG.4.a.1) through through V.GG.4.a.3) above to the PADEP as a written report at three-month intervals. [RACT IP 0052-I020b, Condition V.A.5.a; §2103.12.k]

d. Reporting instances of non-compliance does not relieve the permittee of the requirement to report breakdowns in accordance with Site Level Condition IV.9, if appropriate. [§2103.12.k]

6. Work Practice Standards:

At no time shall the permittee allow Boiler No. 1 to operate unless the subject equipment is properly operated and maintained according to good engineering and air pollution control practices by performing regular maintenance with the exception of actions to mitigate emergency conditions. [RACT IP 0052-I020b, Condition V.A.6; §2103.12.a.2.B; 25 Pa Code §129.99]

7. Additional Requirements:

40 CFR 63, Subpart DDDDD – National Emission Standards for Hazardous Air Pollutants for Industrial, Commercial, and Institutional Boilers and Process Heaters is hereby incorporated by reference. The Department shall reopen the permit to incorporate specific requirements from 40 CFR 63, Subpart DDDDD in accordance with §2103.25.a.1. [§2103.12.h.6; §2103.12.f.3; §2103.25.a.1]

PERMIT SHIELD IN EFFECT

proposed

HH. Boiler No. 2: B002

Process Description: Steam production
Facility ID: B002
Max. Design Rate: 481 MMBtu/hr (Heat Input)
Capacity: 481 MMBtu/hr (Heat Input)
Raw Materials: Desulfurized coke oven gas and natural gas
Control Device: NA

1. Restrictions:

a. Only coke oven gas and natural gas shall be combusted in Boiler No. 2 (B002). [§2103.12.a.2]

b. The permittee shall not operate, or allow to be operated, any source in such manner that unburned coke oven gas is emitted into the open air. In addition, the permittee shall not flare, mix, or combust coke oven gas, or allow such gas to be flared, mixed or combusted unless the gas meets the requirements of Site Level Condition IV.33. [§2105.21.h; §2105.21.h.4]

c. Emissions of NO_X from Boiler No. 2 shall not exceed 0.37 lb/MMBtu, with the exception of actions to mitigate emergency situations. The NO_X emissions shall be determined by a thirty (30) day rolling average and a twelve (12) month rolling average Continuous Emission Monitoring (CEM) data for the lbs/MMBtu and tons/yr emission limitation respectively. [RACT IP 0052-I020b, Condition V.A.1.b; 25 Pa Code §129.99; §2102.04.b.5; §2105.06.b.5)

d. Boiler No. 2 (B002) shall have properly maintained and operated Continuous Monitoring Systems or approved alternatives for continuously monitoring the NO_X concentration in the exhaust gas, meeting all the requirements of §2108.03 at all times with the exception of emergency or planned outages, repairs or maintenance. [RACT Plan 234; 25 PA Code §123.51]

e. The permittee shall not operate, or allow to be operated, Boiler No. 2 in such manner that emissions of particulate matter exceed the rate established by the formula in §2104.02.a.3 [§2104.02.a.3; §2104.02.a.1.C]

f. As an alternative to Condition V.HH.1.e, except for fuel emergencies of limited duration with prior Department approval, the permittee shall not operate, or allow to be operated, Boiler No. 2 in such manner that emissions of particulate matter exceed 0.02 pounds per million BTUs of actual heat input at any time, regardless of the fuel used. [§2104.02.a.5]

g. The permittee shall not operate, or allow to be operated, Boiler No. 2 (B002) in such manner that the opacity of visible emissions, excluding uncombined water: [§2104.01.a; §2108.01.d]
   1) Equal or exceed an opacity of 20% for a period or periods aggregating more than three (3) minutes in any 60 minute period; or,
   2) Equal or exceed an opacity of 60% at any time.

h. Condition V.HH.1.g above shall not apply to visible emissions resulting solely from the cold start of Boiler B001 if such cold start has been reported as required by §2108.01.d. [§2104.b.3]

proposed

i. **Emissions Limitations:** Emissions from Boiler No. 2 (B002) shall not exceed the limits listed in Table V-HH-1 at any time: [§2105.06.b.5; §2105.03; RACT IP 0052-I020b, Condition V.A.1.b]

TABLE V-HH-1
B002 Emission Limitations

POLLUTANT	HOURLY EMISSION LIMIT (lb/hr)	ANNUAL EMISSION LIMIT (tons/year)[1]
Particulate Matter	9.62	42.14
PM_{10}	9.62	42.14
NO_X	177.97*	780
CO	37.89	165.94
VOC	0.21	0.93

[1]A year is defined as any consecutive 12-month period.
*Based on a 30-day rolling average

j. The permittee shall comply with the SO_2 emissions in condition IV.33.g [§2105.21.h; SO_2 SIP IP 0052-I017, Condition V.A.1.b

2. Testing Requirements:

a. The permittee shall perform Relative Accuracy Test Audits (RATA) of the NO_X CEMS as specified in 25 PA Code §§139.101-139.111. [§2108.03]

b. Emissions of NO_X may be determined by the CEMs required in Condition V.HH.3.a below in lieu of a stack test to determine compliance with the emissions limitation of Conditions V.HH.1.c and V.HH.1.i above. [§2103.12.i; §2103.12.h.1; §2108.02; §2108.03; RACT IP 0052-I020b, Condition V.A.2.a; 25 Pa Code §129.100]

c. The permittee shall have sulfur dioxide (SO_2) emissions stack tests performed on the boiler stacks at least once every two years as required by Article XXI §2108.02.b to demonstrate compliance with condition IV.33.g above. SO_2 emission tests shall be conducted according to Method 6, 6A, 6B, or 6C as specified in 40 CFR 60, Appendix A. The permittee shall submit a stack test protocol to the Department for approval at least 45 days prior to the test date(s). [§2108.02.b; §2108.02.e; SO_2 SIP IP 0052-I017, Condition V.A.2.a]

d. The permittee shall have carbon monoxide (CO) emissions stack tests performed on the boiler stacks at least once every two years as required by Article XXI §2108.02.b to demonstrate compliance with condition V.HH.1.i. Testing for CO shall be conducted in accordance with EPA Method 10, 10A or 10B or equivalent, Article XXI §2108.02, and as approved by the Department. The permittee shall submit a stack test protocol to the Department for approval at least 45 days prior to the test date(s). [§2103.12.h.1; §2108.02.b; §2108.02.e]

e. The permittee shall have tests for PM emissions performed on the Boiler stack at least once every two (2)years to demonsrate compliance with condition V.HH.1.i. The emissions testing shall be conducted according to the following and the permittee shall submit a stack test protocol to the Department for approval at least 45 days prior to the test date(s). [§2103.12.h.1; §2108.02.b, §2108.02.e]

proposed

1) Particulate Matter shall be determined by EPA Method 5B, or equivalent as approved by the Department;
2) PM_{10} and $PM_{2.5}$ shall be determined by EPA Method 5B and 202, or an equivalent method as approved by the Department;

f. The Department reserves the right to require additional emissions testing sufficient to assure compliance with the terms and conditions of this permit. Such testing shall be performed in accordance with Site Level Condition IV.14 above and Article XXI §2108.02. [§2103.12.h.1]

3. Monitoring Requirements:

a. The permittee shall install, operate, and maintain continuous nitrogen oxides monitoring systems and other monitoring systems to convert data to required reporting units in compliance with 25 PA Code §§139.101-139.111 relating to requirements for continuous in-stack monitoring for stationary sources. [§2108.03.b.2; RACT IP20b, Condition V.A.3.a]

b. The volume of coke oven gas and natural gas combusted in Boiler No. 2 and the H_2S content of the coke oven gas shall be monitored and recorded on a daily basis (midnight to midnight). [§2103.12.i]

4. Record Keeping Requirements:

a. The permittee shall maintain all appropriate records to demonstrate compliance with the requirements of §2105.06. Such records shall provide sufficient data and calculations to clearly demonstrate that all requirements of §2105.06 are met. The permittee shall record and maintain such data and information required to determine compliance for the facility in a time frame consistent with the averaging period of the requirements of both §2105.06 and RACT IP 0052-I020b. [2102.04.b.5; §2108.03.d; §2105.06; 25 Pa Code §129.100; RACT IP 0052-I020b, Condition V.A.4.a]

1) An identification of each instance during the reporting period during which NO_X emissions exceeded the applicable emission limitation rates in Conditions V.HH.1.c and V.HH.1.i and an identification of the reasons, if known, for such exceedance. The averaging period used for making such identification shall correspond to the averaging period specified in condition V.HH.1.c above.

2) An identification of each period during which the continuous emission monitoring system was inoperative, except for zero and span drift checks, the reasons therefore, and the nature of repairs or adjustments performed or to be performed.

3) An identification of calibrations, zero and span drift checks, and other quality assurance procedures.

b. The permittee shall maintain records of the daily amounts of coke oven gas and natural gas combusted and the H_2S content of the coke oven gas. [§2103.12.j]

c. The permittee shall record all instances of non-compliance with the conditions of this permit upon occurrence along with corrective action taken to restore compliance. [§2103.12.j]

d. All records shall be retained by the facility for at least five (5) years. These records shall be made

proposed

available to the Department upon request for inspection and/or copying. [§2103.12.j.2; RACT IP 0052-I020b, Condition V.A.4.c]

5. Reporting Requirements:

a. The permittee shall submit a semiannual report to the Department in accordance with the requirements of General Condiiton III.15 above that lists each exceedance of the 30-day rolling average emission limitation for NO_X of 0.37 lb/MMBtu and the 12-month rolling average emission limitation for NO_X of 780 tons/yr. The date of each exceedance shall also be listed. [§2103.12.k]

b. The permittee shall report the following information semi-annually to the Department in accordance with General Condition III.15 above. The reports shall contain all required information for the time period of the report. The reports shall be postmarked by the 30th day following the end of the reporting period. [RACT IP 0052-I020b, Condition V.A.5.a; §2103.12.k; §2103.12.a.2.B]

1) Total monthly Fuel Combustion Unit, fuel use, per fuel type;
2) Cold start information; and
3) Non-compliance information required to be recorded by Condition V.HH.4.c above

c. The permittee shall submit the information identified in conditions V.HH.4.a.1) through V.HH.4.a.3) above to the PADEP as a written report at three-month intervals. [RACT IP 0052-I020b, Condition V.A.5.a; §2103.12.k]

d. Reporting instances of non-compliance does not relieve the permittee of the requirement to report breakdowns in accordance with Site Level Condition IV.9, if appropriate. [§2103.12.k]

6. Work Practice Standards:

At no time shall the permittee allow Boiler No. 2 to operate unless the subject equipment is properly operated and maintained according to good engineering and air pollution control practices by performing regular maintenance with the exception of actions to mitigate emergency conditions. [RACT IP 0052-I020b, Condition V.A.6; §2102.04.b.5; 25 Pa Code §129.99).

7. Additional Requirements:

40 CFR 63, Subpart DDDDD – National Emission Standards for Hazardous Air Pollutants for Industrial, Commercial, and Institutional Boilers and Process Heaters is hereby incorporated by reference. The Department shall reopened the permit to incorporate specific requiremet from 40 CFR 63, Subpart DDDDD in accordance with §2103.25.a.1. [§2103.12.h.6; §2103.12; §2103.25.a.1]

PERMIT SHIELD IN EFFECT

proposed

II. Boilers R1 and R2: B005 and B006

Process Description: Steam production
Facility ID: B005 & B006
Max. Design Rate: 229 MMBtu/hr, each (Heat Input)
Capacity: 229 MMBtu/hr, each (Heat Input)
Raw Materials: Desulfurized coke oven gas and natural gas
Control Device: NA

1. Restrictions:

a. Only coke oven gas and natural gas shall be combusted in Boilers R1 and R2. [§2103.12.a.2]

b. The permittee shall not operate, or allow to be operated, any source in such manner that unburned coke oven gas is emitted into the open air. In addition, the permittee shall not flare, mix, or combust coke oven gas, or allow such gas to be flared, mixed or combusted unless the gas meets the requirements of Site Level Condition IV.33. [§2105.21.h; §2105.21.h.4]

c. NO_X emissions from each Boilers No. R1 or R2 shall not exceed 0.31 lb/MMBtu with the exception of actions to mitigate emergency situations: [RACT IP 0052-I020b, Condition V.B.1.b; 25 Pa Code §129.99; §2102.04.b.5; §2105.06.d]

d. Except for fuel emergencies of limited duration with prior Department approval, the permittee shall not operate, or allow to be operated, Boilers R1 or R2 in such manner that emissions of particulate matter exceed 0.02 pounds per million BTUs of actual heat input at any time, regardless of the type of fuel used. [§2104.02.a.4.D]

e. The permittee shall not operate, or allow to be operated, Boiler R1 or Boiler R2 in such manner that the opacity of visible emissions, excluding uncombined water: [§2104.01.a and §2108.01.d]
   1) Equal or exceed an opacity of 20% for a period or periods aggregating more than three (3) minutes in any 60 minute period; or,
   2) Equal or exceed an opacity of 60% at any time.

f. Condition V.II.1.e above shall not apply to visible emissions resulting solely from the cold start of Boiler R1or Boiler R2, if such cold start has been reported as required by §2108.01.d. [§2104.b.3]

proposed

g. **Emissions Limitations:** Emissions from each boiler (Boiler R1 and Boiler R2) shall not exceed the limits listed in Table V-II-1 at any time: [RACT IP 0052-I020b, Condition V.B.1.b; 25 Pa Code §129.99; §2102.04.b.5; §2105.06.d]

TABLE V-II-1
Emission Limitations for Boiler R1 or Boiler R2 (B005 or B006)

POLLUTANT	HOURLY EMISSION LIMIT Per Boiler (lb/hr)	ANNUAL EMISSION LIMIT Per Boiler (tons/year) [1]*
Particulate Matter	4.58	20.06
PM_{10}	4.58	20.06
NO_X	70.99	310.94
CO	48.49	212.01
VOC	0.10	0.44

[1]A year is defined as any consecutive 12-month period.

h. The permittee shall comply with the SO_2 emissions in condition IV.33.g [§2105.21.h; SO_2 SIP IP 0052-I017, Condition V.A.1.b]

2. Testing Requirements:

a. The permittee shall perform emissions testing on Boilers R1 and R2 at least once every two years for NO_X and CO. NOx testing shall be in accordance with EPA Methods 7 through 7E or equivalent or other such methods as approved by the Department. CO testing shall be in accordance with EPA Method 10, 10A or 10B or equivalent or other such methods as approved by the Department. The permittee shall submit a stack test protocol to the Department for approval at least 45 days prior to the test date(s). [RACT IP 0052-I020b, Condition V.B.2.a; §2108.02.c; §2103.12.h.1; §2108.02.b; §2107.05]

b. The permittee shall have sulfur dioxide (SO_2) emissions stack tests performed on the boiler stacks at least once every two years as required by Article XXI §2108.02.b to demonstrate compliance with condition IV.33.g above. SO_2 emission tests shall be conducted according to Method 6, 6A, 6B, or 6C as specified in 40 CFR 60, Appendix A. The permittee shall submit a stack test protocol to the Department for approval at least 45 days prior to the test date(s). [§2108.02.b; §2108.02.e; SO_2 SIP IP 0052-I017, Condition V.A.2.a]

c. The permittee shall perform emissions tests for PM on Boilers R1 & R2 to demonstrate compliance with condition V.II.1.g. Testing shall be repeated at least once every two (2) years from the date of the most recent valid test. Testing shall be conducted in accordance with approved EPA Methods in Appendix A of 40 CFR Part 60, Article XXI §2108.02, or another Department approved test method. [§2103.12.h.1; §2108.02.b, §2108.02.e]

d. The Department reserves the right to require additional emissions testing sufficient to assure compliance with the terms and conditions of this permit. Such testing shall be performed in accordance with Site Level Condition IV.14 above and Article XXI §2108.02. [§2103.12.h.1]

proposed

3. Monitoring Requirements:

The volume of coke oven gas and natural gas combusted in Boilers R1 and R2 and the H_2S content of the coke oven gas shall be monitored and recorded on a daily basis (midnight to midnight). [§2103.12.i]

4. Record Keeping Requirements:

a. The permittee shall keep and maintain the following data for the boilers: [§2103.12.j; RACT IP 0052-I020b, Condition V.B.4.a; 25 Pa Code §129.100]

1) Records of the type and amount of each fuel combusted in Boilers R1 and R2 and the H_2S content of the coke oven gas (daily, monthly and 12 months)
2) Cold starts (date, time and duration of each occurrence);
3) Records of operation, maintenance, inspection, calibration and/or replacement of combustion equipment.

b. The permittee shall record all instances of non-compliance with the conditions of this permit upon occurrence along with corrective action taken to restore compliance. [§2103.12.j]

c. All records shall be retained by the facility for at least five (5) years. These records shall be made available to the Department upon request for inspection and/or copying. [§2103.12.j.2]

5. Reporting Requirements:

a. The permittee shall report the following information semi-annually to the Department in accordance with General Condition III.15 above. The reports shall contain all required information for the time period of the report. [§2103.12.k; §2103.12.a.2.B]

1) Monthly and 12-month data required to be recorded by Condition V.II.4.a above;
2) Cold start information; and
3) Non-compliance information required to be recorded by Condition V.II.4.b above

b. Reporting instances of non-compliance does not relieve the permittee of the requirement to report breakdowns in accordance with Site Level Condition IV.9, if appropriate. [§2103.12.k]

6. Work Practice Standards:

At no time shall the permittee allow Boiler No. R1 or R2 to operate unless the subject equipment is properly operated and maintained according to good engineering and air pollution control practices by performing regular maintenance with the exception of actions to mitigate emergency conditions. [RACT IP 0052-I020b, Condition V.B.6; §2102.04.b.5; 25 Pa Code §129.99]

7. Additional Requirements

40 CFR 63, Subpart DDDDD – National Emission Standards for Hazardous Air Pollutants for Industrial, Commercial, and Institutional Boilers and Process Heaters is hereby incorporated by reference. The Department shall reopen the permit to incorporate specific requirements from 40 CFR 63, Subpart DDDDD in accordance with §2103.25.a.1. [§2103.12.h.6; §2103.12.f.3; §2103.25.a.1]

PERMIT SHIELD IN EFFECT

proposed

JJ. Boilers T1 and T2: B007 and B008

Process Description: Steam production
Facility ID: B007& B008
Max. Design Rate: 156 MMBtu/hr, each (Heat Input)
Capacity: 156 MMBtu/hr, each (Heat Input)
Raw Materials: Desulfurized coke oven gas and natural gas
Control Device: NA

1. Restrictions:

a. Only coke oven gas and natural gas shall be combusted in Boilers T1 and T2. [§2103.12.a.2]

b. The permittee shall not operate, or allow to be operated, any source in such manner that unburned coke oven gas is emitted into the open air. In addition, the permittee shall not flare, mix, or combust coke oven gas, or allow such gas to be flared, mixed or combusted unless the gas meets the requirements of Site Level Condition IV.33. [§2105.21.h; §2105.21.h.4]

c. Emissions of NO_X from each Boiler T1 or Boiler T2 shall not exceed 0.31 lb/MMBtu, with the exception of actions to mitigate emergency situations. [RACT IP 0052-I020b, Condition V.C.1.b; §2105.06.b.5; §2103.12.a.2.B]

d. Except for fuel emergencies of limited duration with prior Department approval, the permittee shall not operate, or allow to be operated, Boilers T1 or T2 in such manner that emissions of particulate matter exceed 0.02 pounds per million BTUs of actual heat input at any time, regardless of the type of fuel used. [§2104.02.a.4.F & G]

e. When combusting COG and natural gas simultaneously in Boilers T1 and T2, particulate mass emissions shall not exceed the rate determined by the formula in §2104.02.a.3. The allowable emissions for COG and natural gas to be used in the formula are specified in Condition V.JJ.1.d above. As an alternative to Condition V.JJ.1.d, except for fuel emergencies of limited duration with prior Department approval, the permittee shall not operate, or allow to be operated, Boilers T1 or T2 in such manner that emissions of PM_{10} exceed 0.12 pounds per million BTUs of actual heat input at any time, regardless of the fuel used. [§2104.02.a.5]

f. The permittee shall not operate, or allow to be operated, Boiler T1 or Boiler T2 in such manner that the opacity of visible emissions, excluding uncombined water: [§2104.01.a; §2108.01.d]

1) Equal or exceed an opacity of 20% for a period or periods aggregating more than three (3) minutes in any 60 minute period; or,
2) Equal or exceed an opacity of 60% at any time.

g. Condition V.JJ.1.f above shall not apply to visible emissions resulting solely from the cold start of Boiler T1 and Boiler T2, if such cold start has been reported as required by §2108.01.d. [§2104.b.3]

proposed

h. Emissions from Boiler T1 or Boiler T2 (B007 or B008) shall not exceed the limits listed in Table V-JJ-1 at any time: [RACT IP 0052-I020b, Condition V.C.1.b; 25 Pa Code §129.99; §2102.04.b.5; §2105.06.d; §2105.03]

TABLE V-JJ-1 - Emission Limitation for Boilers T1 or T2

POLLUTANT	HOURLY EMISSION LIMIT Per Boiler (lb/hr)	ANNUAL EMISSION LIMIT Per Boiler (tons/year)*
Particulate Matter	3.12	13.67
PM_{10}	3.12	13.67
NO_X	48.36	211.82
CO	12.90	53.82
VOC	0.07	0.30

*A year is defined as any consecutive 12-month period.

i. The permittee shall comply with the SO_2 emissions in condition IV.33.g [§2105.21.h; SO_2 SIP IP 0052-I017, Condition V.A.1.b

2. Testing Requirements:

a. The permittee shall perform emissions testing on Boilers T1 and T2 at least once every two years for NO_X. Such testing shall be in accordance with EPA Methods 7 through 7E or other such methods as approved by the Department. The permittee shall submit a stack test protocol to the Department for approval at least 45 days prior to the test date(s). [RACT IP 0052-I020b, Condition V.C.2.a; §2108.02.c; §2108.02.b]

a. The permittee shall have sulfur dioxide (SO_2) emissions stack tests performed on the boiler stacks at least once every two years as required by Article XXI §2108.02.b to demonstrate compliance with condition IV.33.g above. SO_2 emission tests shall be conducted according to Method 6, 6A, 6B, or 6C as specified in 40 CFR 60, Appendix A. The permittee shall submit a stack test protocol to the Department for approval at least 45 days prior to the test date(s). [§2108.02.b; §2108.02.e; SO_2 SIP IP 0052-I017, Condition V.A.2.a]

b. The permittee shall perform emissions tests for PM and CO on Boilers T1 & T2 to demonstrate compliance with condition V.JJ.1.h. Testing shall be repeated at least once every four years from the date of the most recent valid test. Testing shall be conducted in accordance with approved EPA Methods in Appendix A of 40 CFR Part 60, Article XXI §2108.02, or another Department approved test method. [§2103.12.h.1; §2108.02.b, §2108.02.e]

c. The Department reserves the right to require additional emissions testing sufficient to assure compliance with the terms and conditions of this permit. Such testing shall be performed in accordance with Site Level Condition IV.14 above and Article XXI §2108.02. [§2103.12.h.1]

3. Monitoring Requirements:

The volume of coke oven gas and natural gas combusted in Boilers T1 and T2 and the H_2S content of the coke oven gas shall be monitored and recorded on a daily basis (midnight to midnight). [§2103.12.i]

proposed

4. Record Keeping Requirements:

a. The permittee shall keep and maintain the following data for the boilers T1 and T2: [§2103.12.j; RACT IP 0052-I020b, Condition V.C.4.a; 25 Pa Code §129.100]

1) Records of the type and amount of fuel combusted and the H_2S content of the coke oven gas (daily, monthly and 12 months)
2) Cold starts (date, time and duration of each occurrence);
3) Records of operation, maintenance, inspection, calibration and/or replacement of combustion equipment.

b. The permittee shall record all instances of non-compliance with the conditions of this permit upon occurrence along with corrective action taken to restore compliance. [§2103.12.j]

c. All records shall be retained by the facility for at least five (5) years. These records shall be made available to the Department upon request for inspection and/or copying. [§2103.12.j.2]

5. Reporting Requirements:

a. The permittee shall report the following information to the Department semi-annually in accordance with General Condition III.15 above. The reports shall contain all required information for the time period of the report. The reports shall be postmarked by the 30th day following the end of the reporting period. [RACT IP 0052-I020b, Condition V.C.4.a; §2103.12.k; §2103.12.a.2.B]

1) Monthly and 12-month data required to be recorded by Condition V.JJ.4.a above;
2) Cold start information; and
3) Non-compliance information required to be recorded by Condition V.JJ.4.b above

b. Reporting instances of non-compliance does not relieve the permittee of the requirement to report breakdowns in accordance with Site Level Condition IV.9, if appropriate. [§2103.12.k]

6. Work Practice Requirements:

At no time shall the permittee allow Boiler No. T1 or T2 to operate unless the subject equipment is properly operated and maintained according to good engineering and air pollution control practices by performing regular maintenance with the exception of actions to mitigate emergency conditions. [RACT IP 0052-I020b, Condition V.C.6; §2102.04.b.5; 25 Pa Code §129.99]

7. Additional Requirements:

40 CFR 63, Subpart DDDDD – National Emission Standards for Hazardous Air Pollutants for Industrial, Commercial, and Institutional Boilers and Process Heaters is hereby incorporated by reference. The Department shall reopen the permit to incorporate specific requirements from 40 CFR 63, Subpart DDDDD in accordance with §2103.25.a.1. [§2103.12.h.6; §2103.12.f.3; §2103.25.a.1]

PERMIT SHIELD IN EFFECT

proposed

KK. Ammonia Flare: B010

Process Description: Three 5 million gallon wastewater treatment surge tanks and anhydrous ammonia loading station with enclosed flare to control emissions.
Raw Materials: Wastewater surge tank emissions and ammonia emissions
Control Device(s): 12.5 MMBtu/hr enclosed flare (Process Combustion Corporation NPO-0995-27/K)
Facility ID: B010
Max. Design Rate: 12.5 MMBtu/hour
Capacity: n/a

1. Restrictions:

a. The permittee shall not operate or allow to be operated the wastewater tanks and/or anhydrous ammonia loading station unless the emissions are exhausted through an enclosed flare and the flare is properly maintained and operated so that a minimum destruction efficiency of 98% is maintained. [Installation Permit 0052-I002b, January 20, 2005 and §2103.12.a.2.D]

b. Flare operating hours shall not exceed 2,920 hours per year for the wastewater surge tanks and 1,400 hours per year for the ammonia loading station. [IP 0052-I002b; §2103.12.a.2.D]

c. The permittee shall operate and maintain the enclosed flare at a temperature of 1,570 degrees Fahrenheit or higher with a minimum residence time of 0.50 seconds at all times when emissions from the wastewater surge tanks and/or anhydrous ammonia loading operations are exhausted to the flare. [IP 0052-I002b; §2103.12.a.2.D]

d. **Emissions Limitations:** Emissions from Ammonia Flare (B010) shall not exceed the limits listed in Table V-KK-1 at any time: [IP 0052-I002b; §2103.12.a.2.D]:

Table V-KK-1
Ammonia Flare Emission Limitations

Pollutant	Total Emissions	
	lb/hr	tons/yr[1]
SO_2	1.0	1.5
NO_X	19.80	19.03
CO	0.44	0.95
VOC	0.30	0.49
Ammonia	20.0	14.0

[1]A year is defined as any consecutive 12-month period

2. Testing Requirements:

a. Emissions testing shall be performed once every 5 years in accordance with the Site Level Condition IV.14 above entitled "Emissions Testing Requirements" to determine the VOC destruction efficiency of the enclosed flare and the mass emission rate of nitrogen oxides, sulfur oxides and ammonia. [IP 0052-I002b; §2103.12.h; §2108.02]

proposed

b. The Department reserves the right to require additional emissions testing sufficient to assure compliance with the terms and conditions of this permit. Such testing shall be performed in accordance with Site Level Condition IV.14 above and Article XXI §2108.02. [§2103.12.h.1]

3. Monitoring Requirements:

a. The permittee shall monitor and record the operating hours for each operation of the wastewater surge tanks and each loading at the ammonia station. [IP 0052-I002b; §2103.12.i]

b. The permittee shall continuously monitor and record the temperature of the flare with a tolerance +/- 10 degrees Fahrenheit when the equipment is in operation. [IP 0052-I002b; §2103.12.i]

4. Record Keeping Requirements:

a. The results of inspections, episodes of non-compliance with the conditions in Conditions V.KK.1.a through V.KK.1.d above, and corrective actions taken shall be recorded upon occurrence. [IP 0052-I002b; §2103.12.j]

b. The permittee shall record the monthly propane usage for the flare and the daily hours of operation of the flare. [IP 0052-I002b; §2103.12.j]

5. Reporting Requirements:

a. Monthly fuel usage and monthly hours of operation shall be reported to the Department on an annual basis. [IP 0052-I002b; §2103.12.a.2.D]

b. Reporting instances of non-compliance does not relieve the permittee of the requirement to report breakdowns in accordance with Site Level Condition IV.9 above, if appropriate. [IP 0052-I002b; §2103.12.a.2.D]

6. Work Practice Standards

a. The permittee shall properly operate and maintain the ammonia flare according to good engineering and air pollution control practices by performing regular maintenance with the exception of actions to mitigate emergency conditions. [RACT IP 0052-I020b, V.F.1.a; 25 Pa Code §129.99; §2102.04.b.5]

b. The permittee shall maintain and operate the flare according to a flare minimization plan that includes [RACT IP 0052-I020b, V.F.1.b; 25 Pa Code §129.99; §2102.04.b.5]

1) A listing of all process units and ancillary equipment connected to the ammonia flare;
2) A description of the equipment, processes and procedures installed or implemented within the last five years to reduce flaring; and a description of any equipment, processes or procedures the owner or operator plans to install or implement to eliminate or reduce flaring from planned, turnarounds and other scheduled maintenance, based on an evaluation of these activities during the previous five years
3) The facility must follow the flare minimization plan and operate the flare in such a manner that minimizes all flaring except during emergencies, shutdowns, startups, turnarounds or essential operational needs; and
4) The plan should be updated periodically to account for changes in the operation of the flare,

proposed

such as new connections to the flare or the installation of a flare gas recovery system.

PERMIT SHIELD IN EFFECT

proposed

LL. Abrasive Blasting: G001

Process Description: Abrasive blasting of coke oven doors to remove carbon and rust and the removal of rust from other equipment.
Facility ID: G001
Capacity: NA
Raw Materials: Abrasive blasting material (Black Beauty or similar abrasive)
Control Device: Central oven door repair area is enclosed.

1. Restrictions:

a. The permittee shall not conduct, or allow to be conducted, abrasive blasting of any surface, structure, or part thereof, which has a total area of 10,000 square feet unless: [§2105.51]

1) Such abrasive blasting complies with all applicable requirements in §2105.51; and

2) The permittee of such surface:

a. Which has a total area greater than 10,000 square feet, has properly applied for and been issued, by the Department, either an abrasive blasting project permit or annual permit.

b. Which Has a total area greater than 1,000 square feet but not more than 10,000 squares feet, has properly submitted a notice to the Department

b. The permittee shall not operate, or allow to be operated, the abrasive blasting of coke oven doors in such manner that emissions from the abrasive blasting operation: [§2104.01]

1) Have an opacity of 20% or more for a period or periods aggregating more than three (3) minutes in any 60 minute period; or
2) Have an opacity of 60% or more at any time.

2. Testing Requirements:

None except as provided elsewhere.

3. Monitoring Requirements:

None except as provided elsewhere.

4. Record Keeping Requirements:

The permittee shall record and maintain records, on a monthly basis, of the square feet of surface area cleaned by abrasive blasting. [§2103.12.j]

5. Reporting Requirements:

None except as provided elsewhere

PERMIT SHIELD IN EFFECT

proposed

MM. Cold Cleaning Machines

Process Description: Equipment Cleaning
Facility ID: G002
Capacity: NA
Raw Materials: NA
Control Device: NA

1. Restrictions:

The permittee shall not operate, or allow to be operated, any cold cleaning degreaser with a degreaser opening exceeding ten (10) square feet, unless [§2105.15.a]:

a. There is in operation such degreaser:
   1) A cover to prevent evaporation of solvent during periods of non-use;
   2) Equipment for draining cleaned parts; and
   3) A permanent conspicuous label summarizing the operating requirements set forth in condition V.MM.1.b below

b. Such degreaser is operated at all times in such manner that:
   1) Waste solvents are transferred to another party or disposed of by means insuring that no more than 20% by weight of the solvents evaporate into the open air;
   2) Waste solvents are stored in covered containers;
   3) The degreaser cover is closed when parts are not being processed through the degreaser; and,
   4) Cleaned parts are drained for at least 15 seconds or until dripping ceases

2. Testing Requirements:

None except as provided elsewhere.

3. Monitoring Requirements:

None except as provided elsewhere.

4. Record Keeping Requirements:

The permittee shall keep records of solvent usage (type and amount) on a semiannual basis. [§2103.12.j]

5. Reporting Requirements:

None except as provided elsewhere.

PERMIT SHIELD IN EFFECT

proposed

NN. Coal Storage Piles: E001

Process Description: 32 Acres Uncovered (1,393,891 sqft) of coal storage piles
Facility ID: E001
Capacity: 164,000 tons (normal inventory)

1. Restrictions:

a. The permittee shall not operate, or allow to be operated, the coal storage piles in such manner that emissions from the coal storage piles: [§2105.40]

1) Are visible at or beyond the property line;
2) Have an opacity of 20% or more for a period or periods aggregating more than three (3) minutes in any 60 minute period; or
3) Have an opacity of 60% or more at any time.

b. The permittee shall maintain coal moisture content of 5-11% or greater. [§2105.49.a]

2. Testing Requirements:

None except as provided elsewhere.

3. Monitoring Requirements:

None except as provided elsewhere.

4. Record Keeping Requirements:

The permittee shall record and maintain records of the monthly coal throughput and the number of acres used each month for coal storage. [§2103.12.j]

5. Reporting Requirements:

The permittee shall submit semiannual reports to the Department of the monthly coal throughput and the number of acres used each month for coal storage in accordance with General Condition III.15 above. [§2103.12.k]

PERMIT SHIELD IN EFFECT

proposed

OO. Coke Storage Pile- Peters Creek: E002

Process Description: 68 Acres Uncovered (2,962,080 sqft) of coal storage piles
Facility ID: E002
Capacity: 60,000 tons (normal inventory)

1. Restrictions:

a. The permittee shall not operate, or allow to be operated, the coke storage piles in such manner that emissions from the coke storage piles: [§2105.40]

1) Are visible at or beyond the property line;
2) Have an opacity of 20% or more for a period or periods aggregating more than three (3) minutes in any 60 minute period; or
3) Have an opacity of 60% or more at any time.

b. The permittee shall maintain coal moisture content of 1-10% or greater. [§2105.49.a]

2. Testing Requirements:

None except as provided elsewhere.

3. Monitoring Requirements:

None except as provided elsewhere.

4. Record Keeping Requirements:

The permittee shall record and maintain records of the monthly coke throughput and the number of acres used each month for coal storage. [§2103.12.j]

5. Reporting Requirements:

The permittee shall submit semiannual reports to the Department of the monthly coke throughput and the number of acres used each month for coke storage in accordance with General Condition III.15 above. [§2103.12.k]

PERMIT SHIELD IN EFFECT

proposed

PP. Coke Storage Pile- South Yard: E003

Process Description: 5 Acres Uncovered (217,800 sqft) of Coke Storage Piles
Facility ID: E003
Capacity: 20,000 tons (normal inventory)

1. Restrictions:

a. The permittee shall not operate, or allow to be operated, the coke storage piles in such manner that emissions from the coke storage piles: [§2105.40]

1) Are visible at or beyond the property line;
2) Have an opacity of 20% or more for a period or periods aggregating more than three (3) minutes in any 60 minute period; or
3) Have an opacity of 60% or more at any time.

b. The permittee shall maintain coal moisture content of 1-10% or greater. [§2105.49.a]

2. Testing Requirements:

None except as provided elsewhere.

3. Monitoring Requirements:

None except as provided elsewhere.

4. Record Keeping Requirements:

The permittee shall record and maintain records of the monthly coke throughput and the number of acres used each month for coal storage. [§2103.12.j]

5. Reporting Requirements:

The permittee shall submit semiannual reports to the Department of the monthly coke throughput and the number of acres used each month for coke storage in accordance with General Condition III.15 above. [§2103.12.k]

PERMIT SHIELD IN EFFECT

proposed

QQ. Roadways & Vehiclar Traffic: F001

Process Description: Vehicular traffic fugitive dust emissions
Facility ID: F001
Annual Vehicle Miles: Heavy-Duty Diesel Vehicles (HDDV) = 6,081 VMT/D
Paved Roads: 7.84 miles
Unpaved Roads 1.17 miles
Control Device(s): Fugitive dust control

1. Restrictions:

a. The permittee shall not operate, or allow to be operated, any vehicles on plant roadways or parking lots in such manner that emissions: [§2105.42]

1) Are visible at or beyond the property line;
2) Have an opacity of 20% or more for a period or periods aggregating more than three (3) minutes in any 60 minute period; or
3) Have an opacity of 60% or more at any time.

b. The permittee shall not use any waste oil as a dust suppressant. [§2105.49.a.3]

2. Testing Requirements:

None except as provided elsewhere.

3. Monitoring Requirements:

None except as provided elsewhere.

4. Record Keeping Requirements:

The permittee shall record hours of operation and dust control measures taken on a daily basis. [§2103.12.j]

5. Reporting Requirements:

A monthly summary of the dust control measures taken shall be reported to the Department on a semi-annual basis, in accordance with General Condition III.15 above. [§2103.12.k]

6. Work Practice Standard:

a. The permittee shall take actions to minimize the potential for fugitive dust emissions resulting from vehicular traffic on the facility property, including, but not limited to, the following [§2105.49]:

1) The periodic scraping of fine dust from haul roads;
2) The use of water sprays and dust suppressants;
3) Periodic street sweeping of paved roads;
4) Maintain vehicle speed below ten (10) miles per hour.
5) No diesel trucks shall be allowed to idle on-site. [§2105.92]

proposed

b. Any material deposited by trucking or other means on the paved roadways, including public highways, shall be promptly removed. [§2105.49.a.3]

PERMIT SHIELD IN EFFECT

proposed

VI. MISCELLANEOUS

A. Sources of Minor Significance

The following activities are considered trivial:

- Demolition activities.
- Sandblast grit storage boxes.
- Coal yard sedimentation ponds cleaning out and maintenance activities.
- Baghouse dust handling and transportation.
- Using commercial chemical products not produced at the Clairton Works.
- Battery pitch traps.
- Flushing liquor return line vents.
- Waste water treatment plant and associated activities.
- Methanol/antifreeze addition to air lines, coal belts and coke.
- Degreasers (non-halogenated solvent) with a cross-sectional area less than 10 square feet.
- Gasoline and diesel fuel vehicle-fueling operations.
- Coal storage yard sedimentation pond clean out.
- Space heaters

proposed

VII. ALTERNATIVE OPERATING SCENARIOS

There are no alternative operating scenarios for this facility.

proposed

VIII. EMISSIONS LIMITATIONS SUMMARY

The following table summarizes the estimated annual maximum potential emissions (including fugitive) from the U. S. Steel Mon Valley Works - Clairton Plant. These annual (consecutive 12 month) emission estimates assume that all sources operate continuously at their maximum capacity.

TABLE VIII-1 – Permit Emission Limitations Summary

POLLUTANT	ANNUAL EMISSION LIMIT (tons/year)*
Particulate Matter	1,892.09
PM_{10}	1,577.79
$PM_{2.5}$	1,228.40
Sulfur Dioxide	1,907.33
Carbon Monoxide	4,792.18
Nitrogen Oxides	8,965.53
Volatile Organic Compounds	570.36
Ammonia	14
Benzene	62.12
HCl	22
H_2S	103.30
Napthalene	2.05
Toluene	0.69
TRS	159
Cyanide Compound	1.69

*A year is defined as any consecutive 12-month period.

proposed