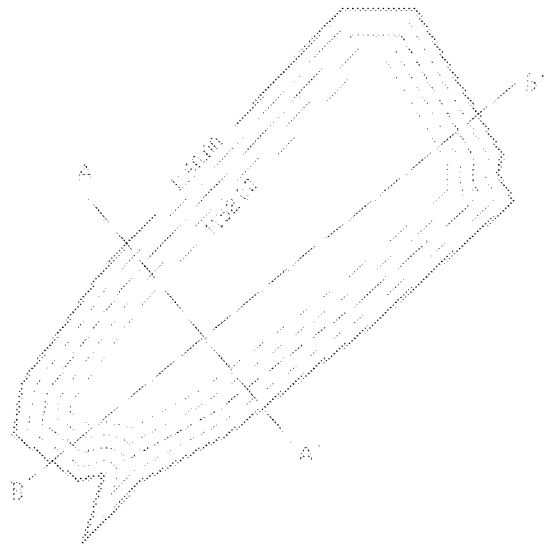

POND "E"

SCALE: 1" = 20'

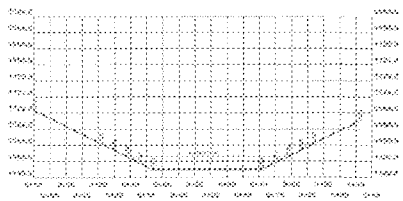

POND E
Cross-Section A-A'

SCALE: AS NOTED

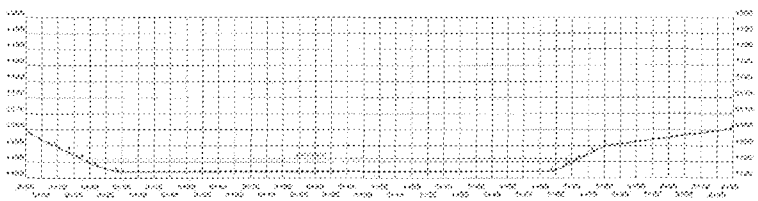

POND E
Cross-Section B-B'

SCALE: AS NOTED

NOTES:
1. [illegible]
2. [illegible]

The Ohio Valley Coal Company
Powhatan No.6 Mine

No.2 Dam
Pond 16 As Built

TOVCC 20795