42-045-00070
PA000293037

Monroe Energy, LLC
Trainer Refinery
4101 Post Road
Trainer, PA 19061
(610) 364-8000

September 30, 2016

U.S. EPA Region 3 (3AP20)
Office of Air Enforcement and Compliance
1650 Arch Street
Philadelphia, PA 19103

Re: Performance Specification Test Program
Monroe Energy, LLC

To whom it may concern:

ARI Environmental was contracted by Monroe Energy, LLC to perform the relative accuracy test audit (RATA) portion of the test program required by 40 CFR, Part 60, Appendix B, Performance Specifications 5 (PS5) and 7 (PS7). All other performance specification tests required for certification were conducted by Monroe personnel. For your review, please find enclosed two (2) original copies of the performance testing report.

Should you have any questions or require additional information, please contact me at 610-364-8396.

Sincerely,

Stephen Brady
Air Compliance Lead
Monroe Energy, LLC

RECEIVED
OCT 03 2016
Air Protection Division

TEST REPORT

RELATIVE ACCURACY TEST AUDITS
MAIN FLARE INITIAL PST

MONROE ENERGY, LLC
TRAINER, PENNSYLVANIA

PREPARED FOR:

MONROE ENERGY, LLC
Trainer Refinery
4101 Post Road
Trainer, Pennsylvania 19061
Phone: 610.364.8396
E-mail: stephen.brady@monroe-energy.com
Attention: Mr. Stephen Brady
Air Compliance Lead

ARI Environmental, Inc., An Affiliate of
Montrose Environmental Group, Inc.
301 Harvey Drive, Units 9 & 10
Newport, Delaware 19804
Phone: 800.851.1674 Ext. 109
Fax: 302.999.9309
E-mail: jbovee@montrose-env.com
Jerry Bovee, P.E., QSTI
East Coast Regional Manager
Source Testing Division

ARI Project No. 999-24
ARI Test Protocol Project No. 999-18
ARI Proposal No. 20816
ARI PA Laboratory Registration No. 68-05220
Monroe Energy Purchase Order No. TP09270
Test Dates: August 2 through 5, 2016

TEST REPORT

RELATIVE ACCURACY TEST AUDITS
MAIN FLARE INITIAL PST

MONROE ENERGY, LLC
TRAINER, PENNSYLVANIA

PREPARED FOR:

MONROE ENERGY, LLC
Trainer Refinery
4101 Post Road
Trainer, Pennsylvania 19061
Phone: 610.364.8396
E-mail: stephen.brady@monroe-energy.com
Attention: Mr. Stephen Brady
Air Compliance Lead

ARI Project No. 999-24
ARI Test Protocol Project No. 999-18
ARI Proposal No. 20816
ARI PA Laboratory Registration No. 68-05220
Monroe Energy Purchase Order No. TP09270
Test Dates: August 2 through 5, 2016

ARI Environmental, Inc., An Affiliate of
Montrose Environmental Group, Inc.
301 Harvey Drive, Units 9 & 10
Newport, Delaware 19804
Phone: 800.851.1674 Ext. 109
Fax: 302.999.9309
E-mail: jbovee@montrose-env.com
Jerry Bovee, P.E., QSTI
East Coast Regional Manager
Source Testing Division

TABLE OF CONTENTS

SECTIONS		PAGE
	REPORT CERTIFICATION	ii
Section 1	**INTRODUCTION AND SUMMARY**	1-1
Section 2	**TESTING AND ANALYTICAL PROCEDURES**	2-1
	2.1 Overview	2-1
	2.2 Methodology	2-1
	2.2.1 Moisture Determination (USEPA Method 4)	2-1
	2.2.2 H_2S Determination (USEPA Method 15)	2-1
	2.2.3 TRS Determination (USEPA Method 15A)	2-2
	2.2.4 Gas Dilution System Verification (USEPA Method 205)	2-4
	2.3 RA Calculations	2-4
	2.4 Seven-Day Calibration Drift Test	2-4
Section 3	**PROCESS DESCRIPTION**	3-1
	3.1 Main Flare – H_2S CEMS	3-1
Section 4	**RESULTS**	4-1

TABLES		
Table 4-1	Main Flare H_2O CEMS RATA Results	4-2
Table 4-2	Main Flare H_2S CEMS RATA Results	4-3
Table 4-3	Main Flare TRS CEMS RATA Results	4-4
Table 4-4	Main Flare H_2S CEMS 7-Day Calibration Drift Test Results	4-5

FIGURES		
Figure 2-1	USEPA Method 15A Sampling Train	2-3

APPENDICES	
Appendix A	Calculation Summaries
Appendix B	Field Data
Appendix C	ARI GC-FPD Data
Appendix D	Monroe Energy CEMS, Process, 7-Day Calibration Drift, Cycle Time, and Linearity Data
Appendix E	Calibration Data
Appendix F	Test Program Qualifications

TABLE OF CONTENTS

STATEMENT OF CONFORMANCE AND TEST REPORT CERTIFICATION

I certify, to the best of my knowledge, that this test program was conducted in a manner conforming to the criteria set forth in ASTM D7036-12: Standard Practice for Competence of Air Emission Testing Bodies, and that project management and supervision of all project related activities were performed by qualified individuals as defined by this practice.

I further certify that this test report and all attachments were prepared under my direction or supervision in accordance with the ARI Environmental, Inc. quality management system designed to ensure that qualified personnel gathered and evaluated the test information submitted. Based on my inquiry of the person or persons who performed the sampling and analysis relating to this performance test, the information submitted in this test report is, to the best of my knowledge and belief, true, accurate and complete.

Jerry Bovee, P.E., QSTI
East Coast Regional Manager, Source Testing Division
ARI Environmental, Inc.

Stephen Brady
Air Compliance Lead
Monroe Energy, LLC

SECTIONONE Introduction and Summary

ARI Environmental, Inc. (ARI), an affiliate of Montrose Environmental Group, Inc., was retained by Monroe Energy, LLC (Monroe Energy) to conduct an initial performance specification test on the Main Flare continuous emission monitoring system (CEMS) at their Trainer Refinery located in Trainer, Pennsylvania. Relative accuracy (RA) tests were conducted by ARI staff on the CEMS for moisture (H_2O), hydrogen sulfide (H_2S) and total reduced sulfur (TRS). Monroe Energy personnel and contractors conducted 7-day drift, cycle time and linearity tests, and provided the data to ARI for inclusion in this report, which can be found in Appendix D.

Testing was conducted pursuant to the requirements of the Code of Federal Regulations, Title 40, Part 60 (40 CFR 60), 40 CFR 63 and the Pennsylvania Department of Environmental Protection (PADEP), Continuous Source Monitoring Manual, Revision No. 8.

A summary of the RATAs is presented below.

Test Date	Source	Parameter	Reference Method	Comments
8/2/16 8/5/16	Main Flare	H_2O	4	40 CFR 60 40 CFR 63 PADEP Rev. 8
		H_2S	15	
		TRS	15A	

Ten relative accuracy (RA) test runs were conducted. Nine test runs were used to calculate the RA of each CEMS parameter.

Where applicable, sampling was conducted in accordance with the following regulatory requirements and procedures:

- 40 CFR 51, Appendix M, USEPA Method 205
- 40 CFR 60, Appendix A, USEPA Methods 4, 15 and 15A
- 40 CFR 60, Appendix B, Performance Specifications (PS) 5 and 7
- 40 CFR 63
- PADEP, Continuous Source Monitoring Manual, Revision No. 8
- Quality Assurance Handbook for Air Pollution Measurement Systems, Volume III, Stationary Source Specific Methods

Testing was conducted by Messrs. Jerry Bovee, Joshua Carr and Sheldon Henry of ARI. Mr. Stephen Brady of Monroe Energy coordinated the test and monitored process operations.

The RA test results are summarized below.

Source/CEMS	RA	Allowable
Main Flare		
H_2O, % by vol.	0.30%	≤5.0% O_2 Difference
H_2S, ppmv db	1.77%	≤10%, Based on the Applicable Standard
TRS, ppmv db	3.97%	≤10%, Based on the Applicable Standard

SECTIONTWO Testing and Analytical Procedures

2.1 OVERVIEW

ARI was retained by Monroe Energy to conduct initial PS RA tests at their Trainer Refinery located in Trainer, Pennsylvania. RAs were conducted on the CEMS serving the Main Flare for H_2O, H_2S and TRS. Testing was conducted on August 2 through 5, 2016.

2.2 METHODOLOGY

Sampling was conducted in accordance with the following regulatory requirements and procedures:

- 40 CFR 51, Appendix M, USEPA Method 205
- 40 CFR 60, Appendix A, USEPA Methods 4, 15 and 15A
- 40 CFR 60, Appendix B, PS-5 and 7
- PADEP, Continuous Source Monitoring Manual, Revision No. 8
- Quality Assurance Handbook for Air Pollution Measurement Systems, Volume III, Stationary Source Specific Methods

2.2.1 Moisture Determination (USEPA Method 4)

Flare gas moisture content was determined in accordance with USEPA Method 4 procedures. Moisture was collected in a series of chilled impingers containing test method specific solutions and silica gel. A dry gas meter, to determine the sample volume, followed the impingers. The amount of volume gain in the impingers and weight gain in the silica gel impinger was used to calculate the moisture content. The psychrometric equations in the method were used to calculate the moisture content in % by volume. Moisture concentration was compared to the plant moisture parameter measurement system to determine relative accuracy.

2.2.2 H_2S Determination (USEPA Method 15)

Determination of H_2S at the Main Flare was conducted in accordance with USEPA Method 15 using a gas chromatograph (GC) for separation of sulfur compounds and measurement by a flame photometric detector (FPD).

Technical modifications to USEPA Method 15 during the testing included the following:

1. No sample dilution was required (GC range ~0-300 ppm).
2. No citrate buffer was needed to scrub out sulfur dioxide (SO_2).
3. Certified standard calibration gases were used to calibrate the GC (no permeation tubes used).
4. Only H_2S was analyzed (no other TRS compounds).
5. Sample line loss performed prior to and after the testing was used to correct the final values.

The GC-FPD system consists of an SRI Model 8610C field GC containing a heated gas sampling valve, column oven and detector. The GC-FPD is operated at conditions to separate H_2S from other TRS compounds. A computer-based integrator utilizing Peak Simple software is used for data acquisition and integration.

Gas samples were taken from a tee placed in the fast sample bypass line serving the H_2S CEMS after the sample conditioner. The sample was transported through 0.25-inch OD Teflon tubing from the CEMS location to ARI's monitoring trailer. The sample was transported to a manifold system at a flow rate of approximately 3 liters per minute from which a sample was injected to the GC-FPD. Three H_2S sample GC injections were analyzed by ARI during each test run.

The GC-FPD was calibrated using a series of H_2S gas standards. A gas dilution system was used to prepare the gas standards. The standards were prepared from a certified standard H_2S gas. Currently, USEPA Protocol 1 H_2S calibration gases are not available from vendors due to NIST restrictions based on analytical accuracies. The Environics Model 4040 Gas Dilution System was verified on site following USEPA Method 205 procedures.

2.2.3 TRS Determination (USEPA Method 15A)

Sampling and analysis for TRS was performed in accordance with USEPA Method 15A. Carbon disulfide (CS_2), carbonyl sulfide (COS), and H_2S were thermally oxidized to SO_2 and were then collected in a series of midget impingers containing 3% hydrogen peroxide (H_2O_2) absorbing solution. The samples were analyzed using USEPA Method 6 barium-thorin titration procedures.

As shown in Figure 2-1, the sample was collected through a heated ¼" Teflon sample line connected to a 50-mm Teflon filter, housed in a Teflon filter holder, maintained in a hot box at a temperature high enough to prevent condensation. The sample was then transported through a quartz combustion tube enclosed in a furnace capable of maintaining the temperature at 1100 ± 50°C. After exiting the furnace, the sample was drawn through a series of midget impingers containing the absorbing solution. The first two impingers contained 20 milliliters (mL) of 3% H_2O_2 and the third impinger remained empty. Silica gel was added to the fourth impinger.

Combustion air was introduced to the sample gas stream to ensure oxidation of the sulfur compounds to SO_2, at a flow rate of 0.5 ± 0.05 L/min, upstream of the sampling train assembly. When sampling was ready to commence, the combustion air injection and sample pump was started, and the flare gas sampling valve was opened, within 15 to 30 seconds of each other to avoid pressurizing the sampling train. The sample flow rate was adjusted and maintained at 2.0 ± 0.2 L/min, which produced a target O_2 concentration of 5.0% in the sample gas stream, and promoted oxidation of reduced sulfur compounds to SO_2. At the end of each run the sample pump and combustion air injection were turned off and post run leak checks were performed. An acceptable leak check was less than 2% of the average sampling rate. Sample recovery procedures followed those described in USEPA Method 6, with the exception of the post run sample purge.

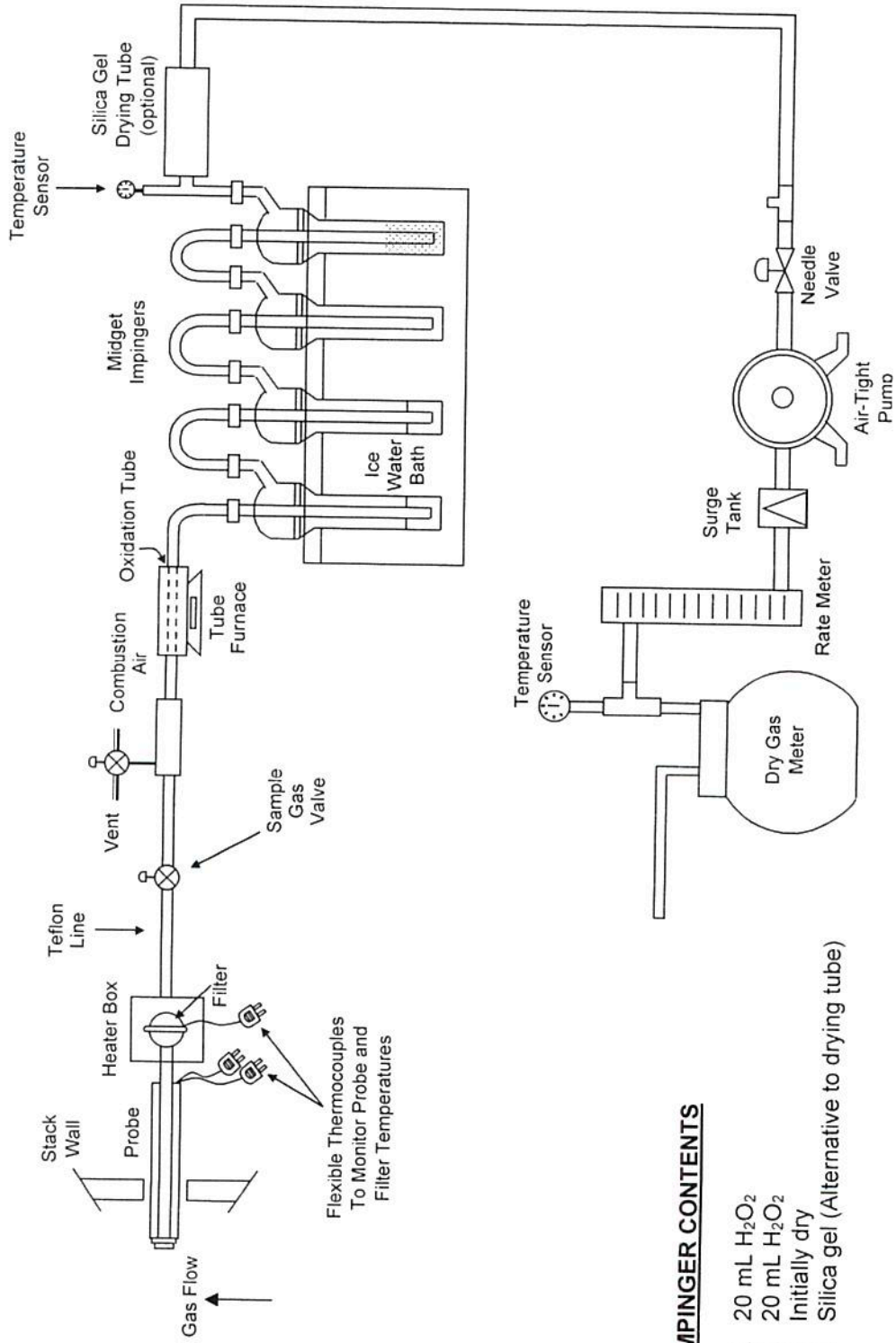

IMPINGER CONTENTS

1. 20 mL H_2O_2
2. 20 mL H_2O_2
3. Initially dry
4. Silica gel (Alternative to drying tube)

FIGURE 2-1. USEPA METHOD 15A SAMPLING TRAIN

A system performance check was conducted to validate the sampling train components and procedures to validate the test runs. Following sampling, the performance check was conducted by introducing a known concentration of COS in the range of the fuel gas concentration or within 20% of the applicable standard. During each sampling run, the sample was delivered at a flow rate of at least 2.5 L/min and was collected over a 30-minute period. The performance check was analyzed in the same manner as the test runs.

The recovery check must be performed in the field before replacing the particulate filter and before cleaning the probe. The data was considered valid if the recovery was 100 ± 20% and is reported along with the testing results. There is no data correction resulting from the recovery check.

After each test run, the probe was rinsed and brushed. These rinses were discarded and the filter was replaced.

The samples were analyzed using the procedures found in USEPA Method 6 (Sections 11.1 and 11.2). No audit sample analysis was conducted for this method.

2.2.4 Gas Dilution System Verification (USEPA Method 205)

All applicable calibration gases were certified by USEPA Protocol 1 procedures. All diluted calibration standards were prepared using an Environics Model 4040 Gas Dilution System that was verified by an onsite field evaluation following the requirements of USEPA Method 205.

ARI's Servomex Model 1440 O_2 analyzer was used for this procedure. It was initially calibrated following USEPA Method 3A procedures. After the calibration procedure was complete, two diluted standards and an EPA Protocol 1 standard were alternately introduced in triplicate, and an average instrument response was calculated for each standard. No single response differed by more than ±2% from the average response for each standard. The difference between the instrument average and the predicted concentration was less than ±2% for each diluted standard. The difference between the certified gas concentration and the average instrument response for the EPA Protocol 1 standard was less than ±2%.

2.3 RA CALCULATIONS

The RA was calculated by directly comparing the RM results with the actual CEMS data, using the following equations:

1. Effluent gas concentration; calculated from pre-test and post-test calibration bias checks:

$$C_{gas} = \left[\overline{C}-C_o\right]\frac{C_{ma}}{C_m-C_o}$$

Where:

C_{gas} = Effluent gas concentration, dry basis, ppmv or %

$\bar{C}$ = Average gas concentration indicated by gas analyzer, dry basis, ppmv or %

C_o = Average of initial and final system calibration bias check responses for the zero gas, ppmv or %

C_m = Average of initial and final system calibration bias check responses for the upscale calibration gas, ppmv or %

C_{ma} = Actual concentration of the upscale calibration gas, ppmv or %

2. Arithmetic mean; calculated arithmetic mean of the difference between the RM results and the CEMS data:

$$\bar{d} = \frac{1}{n}\sum_{i=1}^{n} d_i$$

Where:

n = Number of data points

$\sum_{i=1}^{n} d_i$ = Algebraic sum of the individual differences, d_i

3. Standard deviation:

$$S_d = \left[\frac{\sum_{i=1}^{n} d_i^2 - \frac{\left(\sum_{i=1}^{n} d_i\right)^2}{n}}{n-1} \right]^{1/2}$$

4. Confidence coefficient; 2.5% error confidence coefficient (one-tailed):

$$CC = t_{0.975} \frac{S_d}{\sqrt{n}}$$

Where:

$t_{0.975}$ = t-value as below

n^a	$t_{0.975}$	n^a	$t_{0.975}$	n^a	$t_{0.975}$
2	12.706	7	2.447	12	2.201
3	4.303	8	2.365	13	2.179
4	3.182	9	2.306	14	2.160
5	2.776	10	2.262	15	2.145
6	2.571	11	2.228	16	2.131

[a]The values in this table are already corrected for n-1 degrees of freedom. Use n equal to the number of individual values.

5. Relative accuracy:

$$RA = \frac{|\bar{d}| + |CC|}{\overline{RM}}$$

Where:

$|\bar{d}|$ = Absolute value of the mean difference (from equation 2)

$|CC|$ = Absolute value of the confidence coefficient (from equation 4)

$\overline{RM}$ = Average RM value or applicable standard

Note: RA = $|\bar{d}|$ for the O_2 CEMS

2.4 *SEVEN-DAY CALIBRATION DRIFT TEST*

The seven-day 24-hour zero and high-level CD test consisted of challenging each monitor of the CEMS with a zero or low-level gas and a high-level calibration gas once every 24 hours for seven consecutive days. The difference between the monitor response and the reference gas was divided by the monitor span value for comparison with the allowable drift.

Monroe Energy personnel performed the seven-day CD test on the CEMS on August 5 through 11, 2016. Data for the seven-day CD test are summarized and presented in Table 4-4 and Appendix D of this report.

SECTIONTHREE Process Description

3.1 MAIN FLARE – H_2O, H_2S and TRS CEMS

For safety purposes, the facility operates a flare system for many of the process units. The existing flare system (Main Flare) is connected to the discharge of the safety valves via a header system. The flare system is intended to handle excessive pressure during emergency conditions for pressurized vessels in the refinery. The pressure in these vessels is normally controlled well below the safety valve pressure relief setting. However, during emergency or upset conditions, higher pressures can occur at which point the safety valves relieve the high pressure to protect the integrity of the pressure vessels and to maintain safe conditions. In addition to safety valves, connections to the flare system include nitrogen push-pull systems on process vessels that exclude oxygen or moisture, sweep gases that prevent hydrocarbon condensation as well as prevent oxygen incursion into the flare system and equipment purges for making equipment safe for maintenance.

The existing flare system includes a large piping header system that reaches to all sections of the refinery. Waste gases released are collected via headers (North, Alky and South Side Units) and burned in an elevated flare tip with continuously burning pilots. The header piping is collected together in a main header which terminates at a large knock out drum before the main flare. This drum collects any liquids from the gases entering the flare system and sends the vapors to the flare. The liquids from the knock out drum are recovered and pumped to the refinery's light slop storage tanks. The vapors are sent through the flare stack, a 273' tall structure. The gases are combusted at the flare tip designed as smokeless operation. The samples were collected from the CEMS sample loop.

SECTIONFOUR

Results

The test results are presented in Tables 4-1 through 4-4.

The calculation summaries, field data, ARI reference method monitoring data, CEMS data, calibration data and test program qualifications are included in the appendices.

SECTIONFOUR

Results

TABLE 4-1. Main Flare H_2O CEMS RATA RESULTS

COMPANY : Monroe Energy, LLC
LOCATION : Trainer, PA
SOURCE : Main Flare
TEST DATE : 8/2/16
LOAD LEVEL : ≥50% of Normal Operating Conditions

Run No.	Start Time	Stop Time	Reference Method Samples RM_i H_2O % by vol.	CEMS Output CEM_i H_2O % by vol.	(RM_i-CEM_i) Difference (d_i)
RA-1	09:10	09:40	1.64	0.54	1.10
RA-2	09:44	10:14	0.00	0.48	-0.48
RA-3	10:18	10:48	1.66	0.52	1.13
RA-4	10:52	11:22	0.00	0.37	-0.37
RA-5	11:27	11:57	0.97	0.45	0.52
RA-6	12:01	12:31	0.00	0.50	-0.50
RA-7	12:36	13:06	0.34	0.55	-0.21
RA-8	13:10	13:40	1.33	0.61	0.72
RA-9*	13:47	14:17	3.02	0.63	2.40
RA-10	14:20	14:50	1.55	0.74	0.81

*Data omitted from calculations.

Mean Reference Method Value: 0.831 % by vol.
Mean CEMS Value: 0.529 % by vol.

	Measured	Allowable
Relative Accuracy:	**0.30%**	**≤5.0% H_2O Difference**

TABLE 4-2. Main Flare H_2S CEMS RATA RESULTS

COMPANY : Monroe Energy, LLC
LOCATION : Trainer, PA
SOURCE : Main Flare
TEST DATE : 8/2/16
LOAD LEVEL : ≥50% of Normal Operating Conditions

Run No.	Start Time	Stop Time	Reference Method Samples RM_i H_2S ppmv db	CEMS Output CEM_i H_2S ppmv db	(RM_i-CEM_i) Difference (d_i)
RA-1	09:10	09:40	0.1	2.7	-2.6
RA-2	09:44	10:14	0.1	2.7	-2.6
RA-3	10:18	10:48	0.1	2.8	-2.7
RA-4	10:52	11:22	0.1	2.7	-2.6
RA-5	11:27	11:57	0.1	3.0	-2.9
RA-6*	12:01	12:31	0.1	3.5	-3.4
RA-7	12:36	13:06	0.1	3.2	-3.1
RA-8	13:10	13:40	0.1	2.9	-2.8
RA-9	13:47	14:17	0.1	2.8	-2.7
RA-10	14:20	14:50	0.1	2.8	-2.7

*Data omitted from calculations.

Applicable Standard	162	ppmv db
Mean Reference Method Value:	0.09	ppmv db
Mean CEMS Value:	2.83	ppmv db
Average d:	-2.74	ppmv db
n:	9	
$t_{0.975}$:	2.306	
Standard Deviation:	0.167	
Confidence Coefficient (One-Tailed):	0.128	

	Measured	Allowable
Relative Accuracy:	**1.77%**	**≤10%, Based on the Applicable Standard**

TABLE 4-3. Main Flare TRS CEMS RATA RESULTS

COMPANY : Monroe Energy, LLC
LOCATION : Trainer, PA
SOURCE : Main Flare
TEST DATE : 8/5/16
LOAD LEVEL : ≥50% of Normal Operating Conditions

Run No.	Start Time	Stop Time	Reference Method Samples RM_i TRS ppmv db	CEMS Output CEM_i TRS ppmv db	(RM_i-CEM_i) Difference (d_i)
RA-1	7:48	08:18	28.43	27.62	-0.81
RA-2	8:26	08:56	41.73	32.99	-8.74
RA-3	9:03	09:33	45.75	34.54	-11.21
RA-4	10:49	11:19	40.45	41.69	1.24
RA-5	11:24	11:54	32.14	40.39	8.25
RA-6	12:02	12:32	34.05	41.06	7.02
RA-7	12:39	13:09	43.90	40.89	-3.01
RA-8	13:15	13:45	29.05	31.45	2.40
RA-9*	13:49	14:19	75.37	37.76	-37.61
RA-10	14:23	14:53	37.52	31.09	-6.43

*Data omitted from calculations.

Applicable Standard	162	ppmv db
Mean Reference Method Value:	37.002	ppmv db
Mean CEMS Value:	35.747	ppmv db
Average d:	-1.255	ppmv db
n:	9	
$t_{0.975}$:	2.306	
Standard Deviation:	6.741	
Confidence Coefficient (One-Tailed):	5.181	

	Measured	Allowable
Relative Accuracy:	**3.97%**	**≤10%, Based on the Applicable Standard**

TABLE 4-4. MAIN FLARE H_2S CEMS 7-DAY CALIBRATION DRIFT TEST RESULTS

	Day No.	Date	Calibration Value, ppmv db	Monitor Value, ppmv db	Difference, ppmv db	Drift (% of span)
LOW LEVEL	1	8/5/16	0.0	1.890	1.9	0.63
	2	8/6/16	0.0	1.830	1.8	0.61
	3	8/7/16	0.0	1.890	1.9	0.63
	4	8/8/16	0.0	1.830	1.8	0.61
	5	8/9/16	0.0	4.500	4.5	1.50
	6	8/10/16	0.0	2.400	2.4	0.80
	7	8/11/16	0.0	7.380	7.4	2.46
HIGH LEVEL	1	8/5/16	266.000	265.136	-0.9	-0.29
	2	8/6/16	266.000	258.985	-7.0	-2.34
	3	8/7/16	266.000	256.285	-9.7	-3.24
	4	8/8/16	266.000	260.306	-5.7	-1.90
	5	8/9/16	266.000	273.147	7.1	2.38
	6	8/10/16	266.000	271.647	5.6	1.88
	7	8/11/16	266.000	263.696	-2.3	-0.77

Allowable calibration drift = ±5.0% of the 300 ppmv db span

APPENDIX A

Calculation Summaries

RELATIVE ACCURACY CALCULCATIONS

CLIENT: Monroe Energy
SOURCE: Main Flare
DATE: 8/2/2016
POLLUTANT: Moisture content (Low Load / Normal operating conditions)

RUNS USED FOR RELATIVE ACCURACY CALCULATIONS

Run No.	Start Time	Stop Time	ARI RM Moisture % by vol	ME CEMS Conc. % by vol	Difference % by vol	Run Used (Y/N)
RA-1	09:10	09:40	1.64	0.54	1.10	Y
RA-2	09:44	10:14	0.00	0.48	-0.48	Y
RA-3	10:18	10:48	1.66	0.52	1.13	Y
RA-4	10:52	11:22	0.00	0.37	-0.37	Y
RA-5	11:27	11:57	0.97	0.45	0.52	Y
RA-6	12:01	12:31	0.00	0.50	-0.50	Y
RA-7	12:36	13:06	0.34	0.55	-0.21	Y
RA-8	13:10	13:40	1.33	0.61	0.72	Y
RA-9	13:47	14:17	3.02	0.63	2.40	N
RA-10	14:20	14:50	1.55	0.74	0.81	Y

Mean:	0.831	0.529	0.302
Standard Deviation:			0.686
Applicable Standard:		Relative Accuracy:	
RM Average:	0.831	Relative Accuracy:	99.79
t(0.975):	2.306		
CC:	0.527		

Relative Accuracy must be no greater than 5.0% difference from the mean reference method value.

	Measured	Allowable
%Moisture Difference from Reference Method:	0.30	5.0

ARI ENVIRONMENTAL, INC.
MOISTURE CALCULATION SUMMARY

COMPANY: Monroe Energy
LOCATION: Trainer, PA
SOURCE: Main Flare
TEST DATE: 8/2/2016
RUN NUMBER: 1

γ FACTOR: 0.998
BAROMETRIC: 29.94 in. Hg

METER VOLUME: 1.430 ft^3
METER TEMP: 75.7 °F
LIQUID COLL: 0.5 milliliters

ΔH: 1.50 $in.H_2O$

ENGLISH UNITS
(29.92 in.Hg & 68 °F)

VOLUME OF SAMPLE @ STANDARD CONDITIONS, DRY BASIS

$$V_{mstd} = \left(\frac{528}{29.92}\right) \times V_m \times \gamma \left[\frac{P_{bar} + \frac{\Delta H}{13.6}}{T_m}\right] = 1.413 \text{ dscf}$$

γ = 0.998

VOLUME OF WATER IN SAMPLE @ STANDARD CONDITIONS

$$V_{wstd} = 0.04707 \times V_{lc} = 0.024 \text{ scf}$$

V_{lc} = 0.5 mL

FRACTIONAL MOISTURE CONTENT OF STACK GAS AS MEASURED

$$B_{ws} = \frac{V_{wstd}}{V_{wstd} + V_{mstd}} = 0.0164$$

FRACTIONAL MOISTURE CONTENT OF STACK GAS @ SATURATION

$$B_{ws@saturation} = \frac{S.V.P.}{P_{bar} + \frac{P_{static}}{13.6}} = 0.0302$$

S.V.P. = 0.9046 in. Hg

FRACTIONAL MOISTURE CONTENT USED IN CALCULATIONS

B_{ws} = 0.0164

ARI ENVIRONMENTAL, INC.
MOISTURE CALCULATION SUMMARY

COMPANY: Monroe Energy
LOCATION: Trainer, PA
SOURCE: Main Flare
TEST DATE: 8/2/2016
RUN NUMBER: 2

γ FACTOR: 0.998
BAROMETRIC: 29.94 in. Hg

METER VOLUME: 1.540 ft^3
METER TEMP: 75.6 °F
LIQUID COLL: 0.0 milliliters

ΔH: 1.50 $in.H_2O$

ENGLISH UNITS
(29.92 in.Hg & 68 °F)

VOLUME OF SAMPLE @ STANDARD CONDITIONS, DRY BASIS

$$V_{mstd} = \left(\frac{528}{29.92}\right) \times V_m \times \gamma \left[\frac{P_{bar} + \frac{\Delta H}{13.6}}{T_m}\right] = 1.522 \text{ dscf}$$

γ = 0.998

VOLUME OF WATER IN SAMPLE @ STANDARD CONDITIONS

$$V_{wstd} = 0.04707 \times V_{lc} = 0.000 \text{ scf}$$

V_{lc} = 0.0 mL

FRACTIONAL MOISTURE CONTENT OF STACK GAS AS MEASURED

$$B_{ws} = \frac{V_{wstd}}{V_{wstd} + V_{mstd}} = 0.0000$$

FRACTIONAL MOISTURE CONTENT OF STACK GAS @ SATURATION

$$B_{ws@saturation} = \frac{S.V.P.}{P_{bar} + \frac{P_{static}}{13.6}} = 0.0302$$

S.V.P. = 0.9046 in. Hg

FRACTIONAL MOISTURE CONTENT USED IN CALCULATIONS

B_{ws} = 0.0000

ARI ENVIRONMENTAL, INC.
MOISTURE CALCULATION SUMMARY

COMPANY: Monroe Energy
LOCATION: Trainer, PA
SOURCE: Main Flare
TEST DATE: 8/2/2016
RUN NUMBER: 3

γ FACTOR: 0.998
BAROMETRIC: 29.94 in. Hg

METER VOLUME: 1.413 ft^3
METER TEMP: 75.1 °F
LIQUID COLL: 0.5 milliliters

ΔH: 1.50 $in.H_2O$

ENGLISH UNITS
(29.92 in.Hg & °F)

VOLUME OF SAMPLE @ STANDARD CONDITIONS, DRY BASIS

$$V_{mstd} = \left(\frac{528}{29.92}\right) \times V_m \times \gamma \left[\frac{P_{bar} + \frac{\Delta H}{13.6}}{T_m}\right] = 1.398 \text{ dscf}$$

γ = 0.998

VOLUME OF WATER IN SAMPLE @ STANDARD CONDITIONS

$$V_{wstd} = 0.04707 \times V_{lc} = 0.024 \text{ scf}$$

V_{lc} = 0.5 mL

FRACTIONAL MOISTURE CONTENT OF STACK GAS AS MEASURED

$$B_{ws} = \frac{V_{wstd}}{V_{wstd} + V_{mstd}} = 0.0166$$

FRACTIONAL MOISTURE CONTENT OF STACK GAS @ SATURATION

$$B_{ws@saturation} = \frac{S.V.P.}{P_{bar} + \frac{P_{static}}{13.6}} = 0.0302$$

S.V.P. = 0.9046 in. Hg

FRACTIONAL MOISTURE CONTENT USED IN CALCULATIONS

B_{ws} = 0.0166

ARI ENVIRONMENTAL, INC.
MOISTURE CALCULATION SUMMARY

COMPANY: Monroe Energy
LOCATION: Trainer, PA
SOURCE: Main Flare
TEST DATE: 8/2/2016
RUN NUMBER: 4

γ FACTOR: 0.998
BAROMETRIC: 29.94 in. Hg

METER VOLUME: 1.526 ft^3
METER TEMP: 75.1 °F
LIQUID COLL: 0.0 milliliters

ΔH: 1.50 in.H_2O

ENGLISH UNITS
(29.92 in.Hg & 68 °F)

VOLUME OF SAMPLE @ STANDARD CONDITIONS, DRY BASIS

$$V_{mstd} = \left(\frac{528}{29.92}\right) \times V_m \times \gamma \left[\frac{P_{bar} + \frac{\Delta H}{13.6}}{T_m}\right] = 1.509 \text{ dscf}$$

γ = 0.998

VOLUME OF WATER IN SAMPLE @ STANDARD CONDITIONS

$$V_{wstd} = 0.04707 \times V_{lc} = 0.000 \text{ scf}$$

V_{lc} = 0.0 mL

FRACTIONAL MOISTURE CONTENT OF STACK GAS AS MEASURED

$$B_{ws} = \frac{V_{wstd}}{V_{wstd} + V_{mstd}} = 0.0000$$

FRACTIONAL MOISTURE CONTENT OF STACK GAS @ SATURATION

$$B_{ws@saturation} = \frac{S.V.P.}{P_{bar} + \frac{P_{static}}{13.6}} = 0.0302$$

S.V.P. = 0.905 in. Hg

FRACTIONAL MOISTURE CONTENT USED IN CALCULATIONS

B_{ws} = 0.0000

ARI ENVIRONMENTAL, INC.
MOISTURE CALCULATION SUMMARY

COMPANY: Monroe Energy
LOCATION: Trainer, PA
SOURCE: Main Flare
TEST DATE: 8/2/2016
RUN NUMBER: 5

γ FACTOR: 0.998
BAROMETRIC: 29.94 in. Hg

METER VOLUME: 1.462 ft^3
METER TEMP: 76.1 °F
LIQUID COLL: 0.3 milliliters

ΔH: 1.50 in.H_2O

ENGLISH UNITS
(29.92 in.Hg & 68 °F)

VOLUME OF SAMPLE @ STANDARD CONDITIONS, DRY BASIS

$$V_{mstd} = \left(\frac{528}{29.92}\right) \times V_m \times \gamma \left[\frac{P_{bar} + \frac{\Delta H}{13.6}}{T_m}\right] = 1.443 \text{ dscf}$$

γ = 0.998

VOLUME OF WATER IN SAMPLE @ STANDARD CONDITIONS

$$V_{wstd} = 0.04707 \times V_{lc} = 0.014 \text{ scf}$$

V_{lc} = 0.3 mL

FRACTIONAL MOISTURE CONTENT OF STACK GAS AS MEASURED

$$B_{ws} = \frac{V_{wstd}}{V_{wstd} + V_{mstd}} = 0.0097$$

FRACTIONAL MOISTURE CONTENT OF STACK GAS @ SATURATION

$$B_{ws@saturation} = \frac{S.V.P.}{P_{bar} + \frac{P_{static}}{13.6}} = 0.0302$$

S.V.P. = 0.905 in. Hg

FRACTIONAL MOISTURE CONTENT USED IN CALCULATIONS

B_{ws} = 0.0097

ARI ENVIRONMENTAL, INC.
MOISTURE CALCULATION SUMMARY

COMPANY: Monroe Energy
LOCATION: Trainer, PA
SOURCE: Main Flare
TEST DATE: 8/2/2016
RUN NUMBER: 6

γ FACTOR: 0.998
BAROMETRIC: 29.94 in. Hg

METER VOLUME: 1.300 ft^3
METER TEMP: 76.0 °F
LIQUID COLL: 0.0 milliliters

ΔH: 1.50 $in.H_2O$

ENGLISH UNITS
(29.92 in.Hg & °F)

VOLUME OF SAMPLE @ STANDARD CONDITIONS, DRY BASIS

$$V_{mstd} = \left(\frac{528}{29.92}\right) \times V_m \times \gamma \left[\frac{P_{bar} + \frac{\Delta H}{13.6}}{T_m}\right] = 1.284 \text{ dscf}$$

γ = 0.998

VOLUME OF WATER IN SAMPLE @ STANDARD CONDITIONS

$$V_{wstd} = 0.04707 \times V_{lc} = 0.000 \text{ scf}$$

V_{lc} = 0.0 mL

FRACTIONAL MOISTURE CONTENT OF STACK GAS AS MEASURED

$$B_{ws} = \frac{V_{wstd}}{V_{wstd} + V_{mstd}} = 0.0000$$

FRACTIONAL MOISTURE CONTENT OF STACK GAS @ SATURATION

$$B_{ws@saturation} = \frac{S.V.P.}{P_{bar} + \frac{P_{static}}{13.6}} = 0.0302$$

S.V.P. = 0.905 in. Hg

FRACTIONAL MOISTURE CONTENT USED IN CALCULATIONS

B_{ws} = 0.0000

ARI ENVIRONMENTAL, INC.
MOISTURE CALCULATION SUMMARY

COMPANY: Monroe Energy
LOCATION: Trainer, PA
SOURCE: Main Flare
TEST DATE: 8/2/2016
RUN NUMBER: 7

γ FACTOR: 0.998
BAROMETRIC: 29.94 in. Hg

METER VOLUME: 1.406 ft^3
METER TEMP: 76.0 °F
LIQUID COLL: 0.1 milliliters

ΔH: 1.50 in.H_2O

ENGLISH UNITS
(29.92 in.Hg & 68 °F)

VOLUME OF SAMPLE @ STANDARD CONDITIONS, DRY BASIS

$$V_{mstd} = \left(\frac{528}{29.92}\right) \times V_m \times \gamma \left[\frac{P_{bar} + \frac{\Delta H}{13.6}}{T_m}\right] = 1.388 \text{ dscf}$$

γ = 0.998

VOLUME OF WATER IN SAMPLE @ STANDARD CONDITIONS

$$V_{wstd} = 0.04707 \times V_{lc} = 0.005 \text{ scf}$$

V_{lc} = 0.1 mL

FRACTIONAL MOISTURE CONTENT OF STACK GAS AS MEASURED

$$B_{ws} = \frac{V_{wstd}}{V_{wstd} + V_{mstd}} = 0.0034$$

FRACTIONAL MOISTURE CONTENT OF STACK GAS @ SATURATION

$$B_{ws@saturation} = \frac{S.V.P.}{P_{bar} + \frac{P_{static}}{13.6}} = 0.0302$$

S.V.P. = 0.905 in. Hg

FRACTIONAL MOISTURE CONTENT USED IN CALCULATIONS

B_{ws} = 0.0034

ARI ENVIRONMENTAL, INC.
MOISTURE CALCULATION SUMMARY

COMPANY: Monroe Energy
LOCATION: Trainer, PA
SOURCE: Main Flare
TEST DATE: 8/2/2016
RUN NUMBER: 8

γ FACTOR: 0.998
BAROMETRIC: 29.94 in. Hg

METER VOLUME: 1.413 ft^3
METER TEMP: 75.8 °F
LIQUID COLL: 0.4 milliliters

ΔH: 1.50 $in.H_2O$

ENGLISH UNITS
(29.92 in.Hg & 68 °F)

VOLUME OF SAMPLE @ STANDARD CONDITIONS, DRY BASIS

$$V_{mstd} = \left(\frac{528}{29.92}\right) \times V_m \times \gamma \left[\frac{P_{bar} + \frac{\Delta H}{13.6}}{T_m}\right] = 1.396 \text{ dscf}$$

γ = 0.998

VOLUME OF WATER IN SAMPLE @ STANDARD CONDITIONS

$$V_{wstd} = 0.04707 \times V_{lc} = 0.019 \text{ scf}$$

V_{lc} = 0.4 mL

FRACTIONAL MOISTURE CONTENT OF STACK GAS AS MEASURED

$$B_{ws} = \frac{V_{wstd}}{V_{wstd} + V_{mstd}} = 0.0133$$

FRACTIONAL MOISTURE CONTENT OF STACK GAS @ SATURATION

$$B_{ws@saturation} = \frac{S.V.P.}{P_{bar} + \frac{P_{static}}{13.6}} = 0.0302$$

S.V.P. = 0.9046 in. Hg

FRACTIONAL MOISTURE CONTENT USED IN CALCULATIONS

B_{ws} = 0.0133

ARI ENVIRONMENTAL, INC.
MOISTURE CALCULATION SUMMARY

COMPANY: Monroe Energy
LOCATION: Trainer, PA
SOURCE: Main Flare
TEST DATE: 8/2/2016
RUN NUMBER: 9

γ FACTOR: 0.998
BAROMETRIC: 29.94 in. Hg

METER VOLUME: 1.335 ft^3
METER TEMP: 76.5 °F
LIQUID COLL: 0.9 milliliters

ΔH: 1.50 $in.H_2O$

ENGLISH UNITS
(29.92 in.Hg & °F)

VOLUME OF SAMPLE @ STANDARD CONDITIONS, DRY BASIS

$$V_{mstd} = \left(\frac{528}{29.92}\right) \times V_m \times \gamma \left[\frac{P_{bar} + \frac{\Delta H}{13.6}}{T_m}\right] = 1.317 \text{ dscf}$$

γ = 0.998

VOLUME OF WATER IN SAMPLE @ STANDARD CONDITIONS

$$V_{wstd} = 0.04707 \times V_{lc} = 0.042 \text{ scf}$$

V_{lc} = 0.9 mL

FRACTIONAL MOISTURE CONTENT OF STACK GAS AS MEASURED

$$B_{ws} = \frac{V_{wstd}}{V_{wstd} + V_{mstd}} = 0.0312$$

FRACTIONAL MOISTURE CONTENT OF STACK GAS @ SATURATION

$$B_{ws@saturation} = \frac{S.V.P.}{P_{bar} + \frac{P_{static}}{13.6}} = 0.0302$$

S.V.P. = 0.905 in. Hg

FRACTIONAL MOISTURE CONTENT USED IN CALCULATIONS

B_{ws} = 0.0302

COMPANY: Monroe Energy
LOCATION: Trainer, PA
SOURCE: Main Flare
TEST DATE: 8/2/2016
RUN NUMBER: 10

γ FACTOR: 0.998
BAROMETRIC: 29.94 **in. Hg**

METER VOLUME: 1.519 **ft^3**
METER TEMP: 76.5 **°F**
LIQUID COLL: 0.5 **milliliters**

ΔH: 1.50 **in.H_2O**

ENGLISH UNITS
(29.92 in.Hg & 68 °F)

VOLUME OF SAMPLE
@ STANDARD CONDITIONS, DRY BASIS

$$V_{mstd} = \left(\frac{528}{29.92}\right) \times V_m \times \gamma \left[\frac{P_{bar} + \frac{\Delta H}{13.6}}{T_m}\right] = 1.498 \text{ dscf}$$

γ = 0.998

VOLUME OF WATER IN SAMPLE
@ STANDARD CONDITIONS

$$V_{wstd} = 0.04707 \times V_{lc} = 0.024 \text{ scf}$$

V_{lc} = 0.5 mL

FRACTIONAL MOISTURE CONTENT OF STACK GAS AS MEASURED

$$B_{ws} = \frac{V_{wstd}}{V_{wstd} + V_{mstd}} = 0.0155$$

FRACTIONAL MOISTURE CONTENT OF STACK GAS @ SATURATION

$$B_{ws@saturation} = \frac{S.V.P.}{P_{bar} + \frac{P_{static}}{13.6}} = 0.0302$$

S.V.P. = 0.905 in. Hg

FRACTIONAL MOISTURE CONTENT USED IN CALCULATIONS

B_{ws} = 0.0155

Hydrogen Sulfide CEMS
Relative Accuracy Determination

Company: Monroe Energy
Location: Trainer, PA
Source: Main Flare
CEM Manufacturer: ABB PGC5000
Tag No: 150
Serial No: US408015040002947X

Test Date: 8/2/2016

Parameter : Hydrogen Sulfide

	Test Run Number	Date	Time	Reference Method Samples RMi H_2S (ppm)	CEM Output CEMi H_2S (ppm)	(RMi-CEMi) Difference (d_i)	Difference $(d_i)^2$
	1	8/2/2016	0910-0940	0.1	2.7	-2.6	6.555
	2	8/2/2016	0944-1014	0.1	2.7	-2.6	6.702
	3	8/2/2016	1018-1048	0.1	2.8	-2.7	7.221
	4	8/2/2016	1052-1122	0.1	2.7	-2.6	6.929
	5	8/2/2016	1127-1157	0.1	3.0	-2.9	8.582
*	6	8/2/2016	1201-1231	0.1	3.5	-3.4	11.451
	7	8/2/2016	1236-1406	0.1	3.2	-3.1	9.439
	8	8/2/2016	1310-1340	0.1	2.9	-2.8	7.822
	9	8/2/2016	1347-1417	0.1	2.8	-2.7	7.258
	10	8/2/2016	1420-1440	0.1	2.8	-2.7	7.250

* data omitted from calculations

Applicable Standard:	162	ppm
Mean Reference Method Value:	0.09	ppm
Mean CEM Value:	2.83	ppm
average d:	-2.74	
n:	9	
$t_{0.975}$:	2.306	
Σd_i:	-24.654	
Σd_i^2:	67.758	
standard deviation:	0.167	
confidence coefficient (one-tailed):	0.128	
Relative Accuracy:	**1.77**	% based on Applicable Standard

$$\text{avg d} = 1/n \sum_{i=1}^{n}$$

$$sd = \left(\sum_{i=1}^{n} d_i^2 - \left(\sum_{i=1}^{n} d_i \right)^2 / n \right) / n-1 \Big)^{0.5}$$

$$cc = t_{0.975} \times \frac{sd}{\sqrt{n}}$$

$$RA = \frac{abs(avg.d) + abs(cc)}{\text{mean RM value}} \times 100 \quad \text{(must be < 20\%)}$$

-OR-

$$RA = \frac{abs(avg.d) + abs(cc)}{\text{Applicable Standard}} \times 100 \quad \text{(must be < 10\%)}$$

H_2S PRETEST STANDARDS FIELD DATA

Client:	Monroe Energy
Location:	Trainer, PA
Source:	Main Flare
Date sampled:	8/2/2016
Compound Analyzed:	Hydrogen Sulfide
Method:	USEPA Method 15
Instrument:	SRI-8610C
Detector	GC-FPD
Units of Detection:	ppm

Standard No	Concentration (ppm)	Average Area Counts	Square Root of Area Counts
1	0	0.0	0.00
2	15	556.6	23.59
3	30	2,757.6	52.51
4	60	11,727.2	108.29

Standard (ppm)	Initial Cal 1 (area counts)	Initial Cal 2 (area counts)	Initial Cal 3 (area counts)	Average (area counts)
0	0	0	0	0.0
15	538	575	556	556.6
30	2838	2791	2643	2757.6
60	11721	11867	11594	11727.2

Standard (ppm)	Injection 1 Deviation from mean (%)	Injection 2 Deviation from mean (%)	Injection 3 Deviation from mean (%)
0	0	0	0
15	-3.35	3.38	-0.03
30	2.92	1.23	-4.14
60	-0.06	1.19	-1.14

H_2S POST TEST STANDARDS FIELD DATA

Client:	Monroe Energy
Location:	Trainer, PA
Source:	Main Flare
Date sampled:	08/02/16
Compound Analyzed:	Hydrogen Sulfide
Method:	USEPA Method 15
Instrument:	SRI-8610C
Detector	GC-FPD
Units of Detection:	ppm

Standard No	Concentration (ppm)	Average Area Counts	Square Root of Area Counts	Calibration Drift (%)
1	0	0.0	0.0	0.00
2	15	574.1	23.96	3.14
3	30	2,790.9	52.83	1.21
4	60	11,721.9	108.27	-0.05

Standard (ppm)	Post Cal 1 (area counts)	Post Cal 2 (area counts)	Post Cal 3 (area counts)	Average (area counts)
0	0	0	0	0.0
15	567	572	583	574.1
30	2860	2730	2783	2790.9
60	11572	11779	11814	11721.9

Standard (ppm)	Injection 1 Deviation from mean (%)	Injection 2 Deviation from mean (%)	Injection 3 Deviation from mean (%)
0			
15	-1.17	-0.43	1.60
30	2.47	-2.19	-0.28
60	-1.28	0.49	0.79

Analytical Calculation Summary

Calibration Standards Area Linear Regression Fit

Client:	Monroe Energy
Location:	Trainer, PA
Source:	Main Flare
Date sampled:	8/2/2016
Compound Analyzed:	Hydrogen Sulfide
Method:	USEPA Method 15
Instrument:	SRI-8610C
Detector	GC-FPD
Units of Detection:	ppm

Calibration Standards

Standard #	Standard Peak Area (mv)	Square Root Peak Area (mv)	Standard Concentration (ppm)
0	0.0	0.0	0.0
1	556.6	23.6	15.0
2	2,757.6	52.5	30.0
3	11,727.2	108.3	60.0

Statistical Analysis Summary

Σxy:	8,426.8
Σx:	184.4
Σy:	105.0
Σx^2:	15,041.3
$\Sigma(x)^2$:	34,002.0
N:	4.0
m:	0.5483
b:	0.9735
R^2:	*see chart*

Gas Chromatograph Calibration Curve

Client: Monroe Energy
Source: Main Flare
Date sampled: 8/2/2016

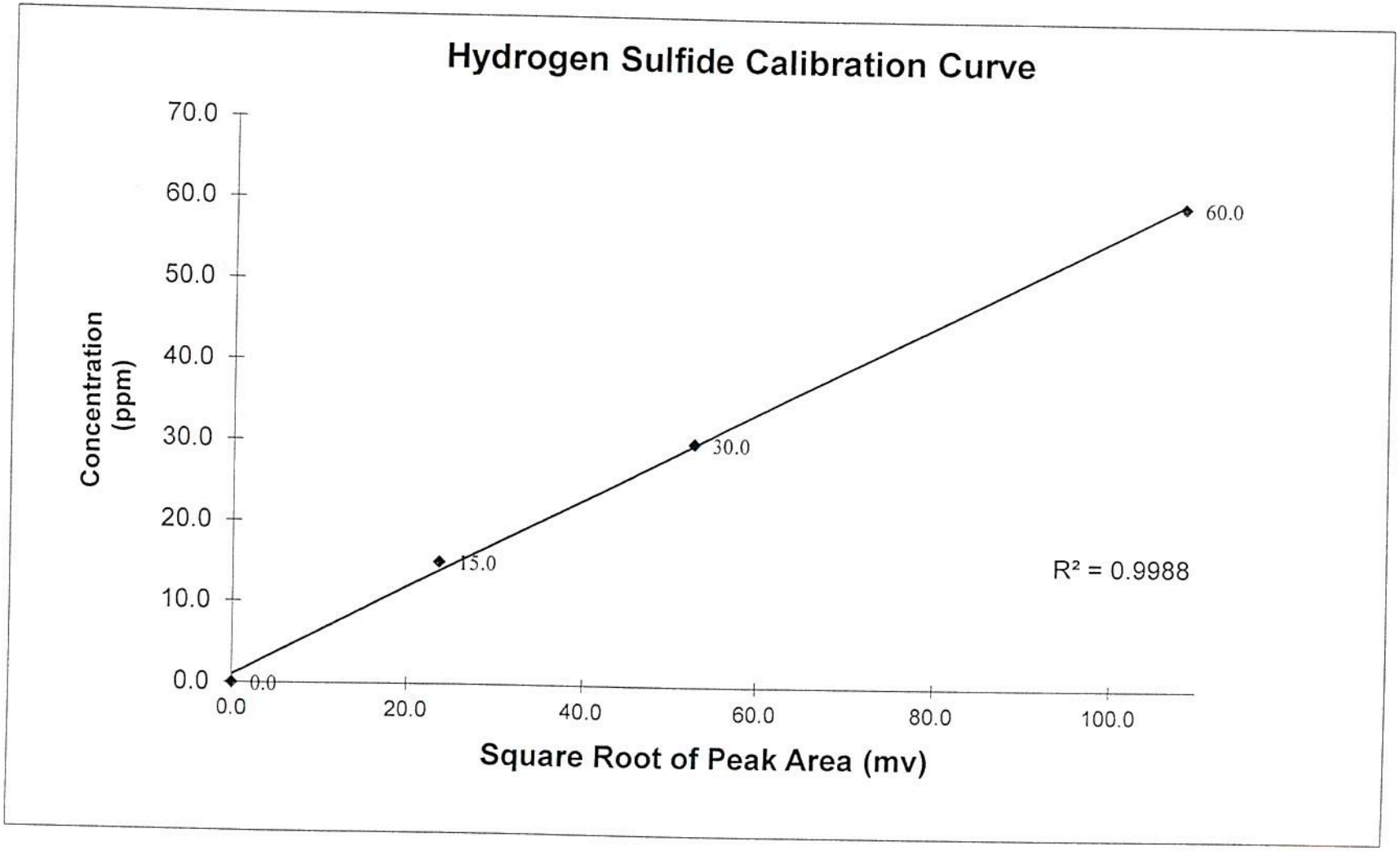

LINE LOSS FIELD DATA

Client:	Monroe Energy
Location:	Trainer, PA
Source:	Main Flare
Date sampled:	08/02/16
Compound Analyzed:	Hydrogen Sulfide
Method:	USEPA Method 15
Instrument:	SRI-8610C
Detector	GC-FPD
Units of Detection:	ppm

Injection No	Line Loss Samples Concentration	Area Counts	Calculated PPM
1	25	2,140	26.3
2	25	2,176	26.6

Fractional Line Loss = ***1.0578***

Hydrogen Sulfide Analytical Calculation Summary

Sample Area Linear Regression Fit

Client:	Monroe Energy
Location:	Trainer, PA
Source:	Main Flare
Date sampled:	8/2/2016
Compound Analyzed:	Hydrogen Sulfide
Method:	USEPA Method 15
Instrument:	SRI-8610C
Detector	GC-FPD
Units of Detection:	ppm

Hydrogen Sulfide Samples

RATA No.	File #	Attenuation	Sample Peak Area (mv)	Square Root Sample Peak Area (mv)	Sample Concentration (ppm)
1-1	ME_H2SNew_Run01.CHR	1	0.0	0.0	0.1
1-2	ME_H2SNew_Run02.CHR	1	0.0	0.0	0.1
1-3	ME_H2SNew_Run03.CHR	1	0.0	0.0	0.1
2-1	ME_H2SNew_Run04.CHR	1	0.0	0.0	0.1
2-2	ME_H2SNew_Run05.CHR	1	0.0	0.0	0.1
2-3	ME_H2SNew_Run06.CHR	1	0.0	0.0	0.1
3-1	ME_H2SNew_Run07.CHR	1	0.0	0.0	0.1
3-2	ME_H2SNew_Run08.CHR	1	0.0	0.0	0.1
3-3	ME_H2SNew_Run09.CHR	1	0.0	0.0	0.1
4-1	ME_H2SNew_Run10.CHR	1	0.0	0.0	0.1
4-2	ME_H2SNew_Run11.CHR	1	0.0	0.0	0.1
4-3	ME_H2SNew_Run12.CHR	1	0.0	0.0	0.1
5-1	ME_H2SNew_Run13.CHR	1	0.0	0.0	0.1
5-2	ME_H2SNew_Run14.CHR	1	0.0	0.0	0.1
5-3	ME_H2SNew_Run15.CHR	1	0.0	0.0	0.1
6-1	ME_H2SNew_Run16.CHR	1	0.0	0.0	0.1
6-2	ME_H2SNew_Run17.CHR	1	0.0	0.0	0.1
6-3	ME_H2SNew_Run18.CHR	1	0.0	0.0	0.1
7-1	ME_H2SNew_Run19.CHR	1	0.0	0.0	0.1
7-2	ME_H2SNew_Run20.CHR	1	0.0	0.0	0.1
7-3	ME_H2SNew_Run21.CHR	1	0.0	0.0	0.1
8-1	ME_H2SNew_Run22.CHR	1	0.0	0.0	0.1
8-2	ME_H2SNew_Run23.CHR	1	0.0	0.0	0.1
8-3	ME_H2SNew_Run24.CHR	1	0.0	0.0	0.1
9-1	ME_H2SNew_Run25.CHR	1	0.0	0.0	0.1
9-2	ME_H2SNew_Run26.CHR	1	0.0	0.0	0.1
9-3	ME_H2SNew_Run27.CHR	1	0.0	0.0	0.1
10-1	ME_H2SNew_Run28.CHR	1	0.0	0.0	0.1
10-2	ME_H2SNew_Run29.CHR	1	0.0	0.0	0.1
10-3	ME_H2SNew_Run30.CHR	1	0.0	0.0	0.1

Test Data Summary

Company:	Monroe Energy
Location:	Trainer, PA
Source:	Main Flare
Date sampled:	8/2/2016
Compound Analyzed:	Hydrogen Sulfide
Method:	USEPA Method 15
Instrument:	SRI-8610C
Detector	GC-FPD
Units of Detection:	ppm

Clock Time	RATA No.	Peak #	H_2S Concentration (ppm)	Line Loss Corrected H_2S Concentration (ppm)	Average H_2S Concentration (ppm)
9:10	1-1	ME_H2SNew_Run01.CHR	0.10	0.09	
9:20	1-2	ME_H2SNew_Run02.CHR	0.10	0.09	
9:30	1-3	ME_H2SNew_Run03.CHR	0.10	0.09	0.1
9:44	2-1	ME_H2SNew_Run04.CHR	0.10	0.09	
9:54	2-2	ME_H2SNew_Run05.CHR	0.10	0.09	
10:04	2-3	ME_H2SNew_Run06.CHR	0.10	0.09	0.1
10:18	3-1	ME_H2SNew_Run07.CHR	0.10	0.09	
10:28	3-2	ME_H2SNew_Run08.CHR	0.10	0.09	
10:38	3-3	ME_H2SNew_Run09.CHR	0.10	0.09	0.1
10:52	4-1	ME_H2SNew_Run10.CHR	0.10	0.09	
11:02	4-2	ME_H2SNew_Run11.CHR	0.10	0.09	
11:12	4-3	ME_H2SNew_Run12.CHR	0.10	0.09	0.1
11:27	5-1	ME_H2SNew_Run13.CHR	0.10	0.09	
11:37	5-2	ME_H2SNew_Run14.CHR	0.10	0.09	
11:47	5-3	ME_H2SNew_Run15.CHR	0.10	0.09	0.1
12:01	6-1	ME_H2SNew_Run16.CHR	0.10	0.09	
12:11	6-2	ME_H2SNew_Run17.CHR	0.10	0.09	
12:21	6-3	ME_H2SNew_Run18.CHR	0.10	0.09	0.1
12:36	7-1	ME_H2SNew_Run19.CHR	0.10	0.09	
12:46	7-2	ME_H2SNew_Run20.CHR	0.10	0.09	
12:56	7-3	ME_H2SNew_Run21.CHR	0.10	0.09	0.1
13:10	8-1	ME_H2SNew_Run22.CHR	0.10	0.09	
13:20	8-2	ME_H2SNew_Run23.CHR	0.10	0.09	
13:30	8-3	ME_H2SNew_Run24.CHR	0.10	0.09	0.1
13:47	9-1	ME_H2SNew_Run25.CHR	0.10	0.09	
13:57	9-2	ME_H2SNew_Run26.CHR	0.10	0.09	
14:07	9-3	ME_H2SNew_Run27.CHR	0.10	0.09	0.1
14:20	10-1	ME_H2SNew_Run28.CHR	0.10	0.09	
14:30	10-2	ME_H2SNew_Run29.CHR	0.10	0.09	
14:40	10-3	ME_H2SNew_Run30.CHR	0.10	0.09	0.1

RELATIVE ACCURACY CALCULATIONS

COMPANY: Monroe Energy
SOURCE: Main Flare
DATE: 8/5/2016
CEMS:
POLLUTANT: TRS

RUNS USED FOR RELATIVE ACCURACY CALCULATIONS

Run No.	Start Time	Stop Time	ARI RM Conc. ppmv db	ME CEMS Conc. ppmv db	Difference ppmv db	Run Used Y/N
1	7:48	08:18	28.43	27.62	-0.81	Y
2	8:26	08:56	41.73	32.99	-8.74	Y
3	9:03	09:33	45.75	34.54	-11.21	Y
4	10:49	11:19	40.45	41.69	1.24	Y
5	11:24	11:54	32.14	40.39	8.25	Y
6	12:02	12:32	34.05	41.06	7.02	Y
7	12:39	13:09	43.90	40.89	-3.01	Y
8	13:15	13:45	29.05	31.45	2.40	Y
9	13:49	14:19	75.37	37.76	-37.61	N
10	14:23	14:53	37.52	31.09	-6.43	Y
		Mean:	37.002	35.747	-1.255	
		Standard Deviation:			6.741	
		Applicable Standard:	162	Relative Accuracy:	3.97	
		RM Average:	37.002	Relative Accuracy:	17.39	
		t(0.975):	2.306			
		CC:	5.181			

Relative Accuracy must be no greater than 20% of the mean value of the RM test or 10% of the emission standard.

	Measured	Allowable
% Emission Standard:	3.97	10.0

Company: Monroe Energy
Location: Trainer, PA
Source: Main Flare
Test Date: 8/5/2016
Run # : 1

Raw Test Data:

V_{ms}:	50.234 liter	V_{ma}:	17.800 liter
Y_d:	0.987 dimensionless	Y_d:	0.998 dimensionless
P_{bar}:	760.0 mmHg	P_{bar}:	760.0 mmHg
ΔH:	0.187 mmHg	ΔH:	0.187 in.H_2O
T_m:	23.8 °C	T_m:	21.8 °C

Laboratory Analysis of Isopropyl Alchohol (IPA) for H_2SO_4:

Normality of $BaCl_2$ titrant:	0.0986 N
Volume of Sample:	100 milliliters
Volume of Sample Aliquot:	20.00 milliliters
Volume of $BaCl_2$ titrant used:	0.15 milliliters
Volume of Blank titrant used:	0.00 milliliters

Calculations:

English Units (29.92 in. Hg, 68° F)

Volume sampled at standard conditions on dry basis:

$$V_{msstd} = \left(\frac{293}{760}\right) \times V_m \times \gamma \left[\frac{P_{bar} + \Delta H}{T_m}\right] = 48.941 \text{ liter}$$

Volume of combustion air added at standard conditions:

$$V_{mastd} = \left(\frac{293}{760}\right) \times V_m \times \gamma \left[\frac{P_{bar} + \Delta H}{T_m}\right] = 17.654 \text{ liter}$$

Volume of sample at standard conditions on dry basis:

$$V_{std} = V_{msstd} - V_{mastd} = 31.288 \text{ liter}$$

TRS concentration, as SO_2

$$C_{SO_2} = \frac{(12025)(N)(V_t - V_b)\left(\frac{V_{soln}}{V_a}\right)}{V_{std}} = 28.4 \text{ ppm, as } SO_2$$

Company: Monroe Energy
Location: Trainer, PA
Source: Main Flare
Test Date: 8/5/2016
Run # : 1

Laboratory Analysis of Isopropyl Alchohol (IPA) for H_2SO_4:

Standardization of Barium Chloride

H_2SO_4 used:	25.00 ml
BaCl used:	25.35 ml
Normality of $BaCl_2$ titrant:	0.0986 N
Volume of Blank titrant used:	0.00 milliliters

Titration of Sample

Volume of Sample:	100.0 milliliters
Volume of Sample Aliquot:	20.00 milliliters

1st titration

Volume of $BaCl_2$ titrant used:	0.15 milliliters

2nd titration

Volume of $BaCl_2$ titrant used:	0.15 milliliters

Company: Monroe Energy
Location: Trainer, PA
Source: Main Flare
Test Date: 8/5/2016
Run # : 2

Raw Test Data:

V_{ms}:	50.715 liter	V_{ma}:	17.400 liter
Y_d:	0.987 dimensionless	Y_d:	0.998 dimensionless
P_{bar}:	760.0 mmHg	P_{bar}:	760.0 mmHg
ΔH:	0.187 mmHg	ΔH:	0.187 in.H_2O
T_m:	25.2 °C	T_m:	22.6 °C

Laboratory Analysis of Isopropyl Alchohol (IPA) for H_2SO_4:

Normality of $BaCl_2$ titrant:	0.0986 N
Volume of Sample:	100 milliliters
Volume of Sample Aliquot:	20.00 milliliters
Volume of $BaCl_2$ titrant used:	0.225 milliliters
Volume of Blank titrant used:	0.00 milliliters

Calculations:

English Units
(29.92 in. Hg, 68° F)

Volume sampled at standard conditions on dry basis:

$$V_{msstd} = \left(\frac{293}{760}\right) \times V_m \times \gamma \left[\frac{P_{bar} + \Delta H}{T_m}\right] = 49.180 \text{ liter}$$

Volume of combustion air added at standard conditions:

$$V_{mastd} = \left(\frac{293}{760}\right) \times V_m \times \gamma \left[\frac{P_{bar} + \Delta H}{T_m}\right] = 17.211 \text{ liter}$$

Volume of sample at standard conditions on dry basis:

$$V_{std} = V_{msstd} - V_{mastd} = 31.969 \text{ liter}$$

TRS concentration, as SO_2

$$C_{SO_2} = \frac{(12025)(N)(V_t - V_b)\left(\frac{V_{soln}}{V_a}\right)}{V_{std}} = 41.7 \text{ ppm, as } SO_2$$

Company: Monroe Energy
Location: Trainer, PA
Source: Main Flare
Test Date: 8/5/2016
Run # : 2

Laboratory Analysis of Isopropyl Alchohol (IPA) for H_2SO_4:

Standardization of Barium Chloride

H_2SO_4 used:	25.00 ml
BaCl used:	25.35 ml
Normality of $BaCl_2$ titrant:	0.0986 N
Volume of Blank titrant used:	0.00 milliliters

Titration of Sample

Volume of Sample:	100.0 milliliters
Volume of Sample Aliquot:	20.00 milliliters

1st titration

Volume of $BaCl_2$ titrant used:	0.20 milliliters

2nd titration

Volume of $BaCl_2$ titrant used:	0.25 milliliters

Company: Monroe Energy
Location: Trainer, PA
Source: Main Flare
Test Date: 8/5/2016
Run # : 3

Raw Test Data:

V_{ms}:	54.680 liter	V_{ma}:	17.400 liter
Y_d:	0.987 dimensionless	Y_d:	0.998 dimensionless
P_{bar}:	760.0 mmHg	P_{bar}:	760.0 mmHg
ΔH:	0.187 mmHg	ΔH:	0.187 in.H_2O
T_m:	26.2 °C	T_m:	22.8 °C

Laboratory Analysis of Isopropyl Alchohol (IPA) for H_2SO_4:

Normality of $BaCl_2$ titrant:	0.0986 N
Volume of Sample:	100 milliliters
Volume of Sample Aliquot:	20.00 milliliters
Volume of $BaCl_2$ titrant used:	0.275 milliliters
Volume of Blank titrant used:	0.00 milliliters

Calculations:

English Units (29.92 in. Hg, 68° F)

Volume sampled at standard conditions on dry basis:

$$V_{msstd} = \left(\frac{293}{760}\right) \times V_m \times \gamma \left[\frac{P_{bar} + \Delta H}{T_m}\right] = 52.844 \text{ liter}$$

Volume of combustion air added at standard conditions:

$$V_{mastd} = \left(\frac{293}{760}\right) \times V_m \times \gamma \left[\frac{P_{bar} + \Delta H}{T_m}\right] = 17.200 \text{ liter}$$

Volume of sample at standard conditions on dry basis:

$$V_{std} = V_{msstd} - V_{mastd} = 35.644 \text{ liter}$$

TRS concentration, as SO_2

$$C_{SO_2} = \frac{(12025)(N)(V_t - V_b)\left(\frac{V_{soln}}{V_a}\right)}{V_{std}} = 45.7 \text{ ppm, as } SO_2$$

Company: Monroe Energy
Location: Trainer, PA
Source: Main Flare
Test Date: 8/5/2016
Run # : 3

Laboratory Analysis of Isopropyl Alchohol (IPA) for H_2SO_4:

Standardization of Barium Chloride

H_2SO_4 used:	25.00 ml
BaCl used:	25.35 ml
Normality of $BaCl_2$ titrant:	0.0986 N
Volume of Blank titrant used:	0.00 milliliters

Titration of Sample

Volume of Sample:	100.0 milliliters
Volume of Sample Aliquot:	20.00 milliliters

1st titration

Volume of $BaCl_2$ titrant used:	0.30 milliliters

2nd titration

Volume of $BaCl_2$ titrant used:	0.25 milliliters

Company: Monroe Energy
Location: Trainer, PA
Source: Main Flare
Test Date: 8/5/2016
Run # : 4

Raw Test Data:

V_{ms}:	60.541 liter	V_{ma}:	18.200 liter
Y_d:	0.987 dimensionless	Y_d:	0.998 dimensionless
P_{bar}:	760.0 mmHg	P_{bar}:	760.0 mmHg
ΔH:	0.187 mmHg	ΔH:	0.187 in.H_2O
T_m:	27.2 °C	T_m:	22.7 °C

Laboratory Analysis of Isopropyl Alchohol (IPA) for H_2SO_4:

Normality of $BaCl_2$ titrant:	0.0986 N
Volume of Sample:	100 milliliters
Volume of Sample Aliquot:	20.00 milliliters
Volume of $BaCl_2$ titrant used:	0.275 milliliters
Volume of Blank titrant used:	0.00 milliliters

Calculations:

English Units (29.92 in. Hg, 68° F)

Volume sampled at standard conditions on dry basis:

$$V_{msstd} = \left(\frac{293}{760}\right) \times V_m \times \gamma \left[\frac{P_{bar} + \Delta H}{T_m}\right] = 58.310 \text{ liter}$$

Volume of combustion air added at standard conditions:

$$V_{mastd} = \left(\frac{293}{760}\right) \times V_m \times \gamma \left[\frac{P_{bar} + \Delta H}{T_m}\right] = 17.997 \text{ liter}$$

Volume of sample at standard conditions on dry basis:

$$V_{std} = V_{msstd} - V_{mastd} = 40.314 \text{ liter}$$

TRS concentration, as SO_2

$$C_{SO_2} = \frac{(12025)(N)(V_t - V_b)\left(\frac{V_{soln}}{V_a}\right)}{V_{std}} = 40.4 \text{ ppm, as } SO_2$$

Company: Monroe Energy
Location: Trainer, PA
Source: Main Flare
Test Date: 8/5/2016
Run # : 4

Laboratory Analysis of Isopropyl Alchohol (IPA) for H_2SO_4:

Standardization of Barium Chloride

H_2SO_4 used:	25.00 ml
BaCl used:	25.35 ml
Normality of $BaCl_2$ titrant:	0.0986 N
Volume of Blank titrant used:	0.00 milliliters

Titration of Sample

Volume of Sample:	100.0 milliliters
Volume of Sample Aliquot:	20.00 milliliters

1st titration

Volume of $BaCl_2$ titrant used:	0.25 milliliters

2nd titration

Volume of $BaCl_2$ titrant used:	0.30 milliliters

Company: Monroe Energy
Location: Trainer, PA
Source: Main Flare
Test Date: 8/5/2016
Run # : 5

Raw Test Data:

V_{ms}:	59.918 liter	V_{ma}:	16.400 liter
Y_d:	0.987 dimensionless	Y_d:	0.998 dimensionless
P_{bar}:	760.0 mmHg	P_{bar}:	760.0 mmHg
ΔH:	0.187 mmHg	ΔH:	0.187 in.H_2O
T_m:	27.2 °C	T_m:	22.9 °C

Laboratory Analysis of Isopropyl Alchohol (IPA) for H_2SO_4:

Normality of $BaCl_2$ titrant:	0.0986 N
Volume of Sample:	100 milliliters
Volume of Sample Aliquot:	20.00 milliliters
Volume of $BaCl_2$ titrant used:	0.225 milliliters
Volume of Blank titrant used:	0.00 milliliters

Calculations:

English Units (29.92 in. Hg, 68° F)

Volume sampled at standard conditions on dry basis:

$$V_{msstd} = \left(\frac{293}{760}\right) \times V_m \times \gamma \left[\frac{P_{bar} + \Delta H}{T_m}\right] = 57.710 \text{ liter}$$

Volume of combustion air added at standard conditions:

$$V_{mastd} = \left(\frac{293}{760}\right) \times V_m \times \gamma \left[\frac{P_{bar} + \Delta H}{T_m}\right] = 16.207 \text{ liter}$$

Volume of sample at standard conditions on dry basis:

$$V_{std} = V_{msstd} - V_{mastd} = 41.504 \text{ liter}$$

TRS concentration, as SO_2

$$C_{SO_2} = \frac{(12025)(N)(V_t - V_b)\left(\frac{V_{soln}}{V_a}\right)}{V_{std}} = 32.1 \text{ ppm, as } SO_2$$

Company: Monroe Energy
Location: Trainer, PA
Source: Main Flare
Test Date: 8/5/2016
Run # : 5

Laboratory Analysis of Isopropyl Alchohol (IPA) for H_2SO_4:

Standardization of Barium Chloride

H_2SO_4 used:	25.00 ml
BaCl used:	25.35 ml
Normality of $BaCl_2$ titrant:	0.0986 N
Volume of Blank titrant used:	0.00 milliliters

Titration of Sample

Volume of Sample:	100.0 milliliters
Volume of Sample Aliquot:	20.00 milliliters

1st titration

Volume of $BaCl_2$ titrant used:	0.20 milliliters

2nd titration

Volume of $BaCl_2$ titrant used:	0.25 milliliters

Company: Monroe Energy
Location: Trainer, PA
Source: Main Flare
Test Date: 8/5/2016
Run # : 6

Raw Test Data:

V_{ms}:	58.021 liter	V_{ma}:	16.800 liter
Y_d:	0.987 dimensionless	Y_d:	0.998 dimensionless
P_{bar}:	760.0 mmHg	P_{bar}:	760.0 mmHg
ΔH:	0.187 mmHg	ΔH:	0.187 in.H_2O
T_m:	27.8 °C	T_m:	23.0 °C

Laboratory Analysis of Isopropyl Alchohol (IPA) for H_2SO_4:

Normality of $BaCl_2$ titrant:	0.0986 N
Volume of Sample:	100 milliliters
Volume of Sample Aliquot:	20.00 milliliters
Volume of $BaCl_2$ titrant used:	0.225 milliliters
Volume of Blank titrant used:	0.00 milliliters

Calculations:

English Units (29.92 in. Hg, 68° F)

Volume sampled at standard conditions on dry basis:

$$V_{msstd} = \left(\frac{293}{760}\right) \times V_m \times \gamma \left[\frac{P_{bar} + \Delta H}{T_m}\right] = 55.780 \text{ liter}$$

Volume of combustion air added at standard conditions:

$$V_{mastd} = \left(\frac{293}{760}\right) \times V_m \times \gamma \left[\frac{P_{bar} + \Delta H}{T_m}\right] = 16.594 \text{ liter}$$

Volume of sample at standard conditions on dry basis:

$$V_{std} = V_{msstd} - V_{mastd} = 39.186 \text{ liter}$$

TRS concentration, as SO_2

$$C_{SO_2} = \frac{(12025)(N)(V_t - V_b)\left(\frac{V_{soln}}{V_a}\right)}{V_{std}} = 34.0 \text{ ppm, as } SO_2$$

Company: Monroe Energy
Location: Trainer, PA
Source: Main Flare
Test Date: 8/5/2016
Run # : 6

Laboratory Analysis of Isopropyl Alchohol (IPA) for H_2SO_4:

Standardization of Barium Chloride

H_2SO_4 used:	25.00 ml
BaCl used:	25.35 ml
Normality of $BaCl_2$ titrant:	0.0986 N
Volume of Blank titrant used:	0.00 milliliters

Titration of Sample

Volume of Sample:	100.0 milliliters
Volume of Sample Aliquot:	20.00 milliliters

1st titration

Volume of $BaCl_2$ titrant used:	0.20 milliliters

2nd titration

Volume of $BaCl_2$ titrant used:	0.25 milliliters

Company: Monroe Energy
Location: Trainer, PA
Source: Main Flare
Test Date: 8/5/2016
Run # : 7

Raw Test Data:

V_{ms}:	60.541 liter	V_{ma}:	17.800 liter
Y_d:	0.987 dimensionless	Y_d:	0.998 dimensionless
P_{bar}:	760.0 mmHg	P_{bar}:	760.0 mmHg
ΔH:	0.187 mmHg	ΔH:	0.187 in.H_2O
T_m:	28.3 °C	T_m:	23.2 °C

Laboratory Analysis of Isopropyl Alchohol (IPA) for H_2SO_4:

Normality of $BaCl_2$ titrant:	0.0986 N
Volume of Sample:	100 milliliters
Volume of Sample Aliquot:	20.00 milliliters
Volume of $BaCl_2$ titrant used:	0.3 milliliters
Volume of Blank titrant used:	0.00 milliliters

Calculations:

English Units (29.92 in. Hg, 68° F)

Volume sampled at standard conditions on dry basis:

$$V_{msstd} = \left(\frac{293}{760}\right) \times V_m \times \gamma \left[\frac{P_{bar} + \Delta H}{T_m}\right] = 58.095 \text{ liter}$$

Volume of combustion air added at standard conditions:

$$V_{mastd} = \left(\frac{293}{760}\right) \times V_m \times \gamma \left[\frac{P_{bar} + \Delta H}{T_m}\right] = 17.571 \text{ liter}$$

Volume of sample at standard conditions on dry basis:

$$V_{std} = V_{msstd} - V_{mastd} = 40.524 \text{ liter}$$

TRS concentration, as SO_2

$$C_{SO_2} = \frac{(12025)(N)(V_t - V_b)\left(\frac{V_{soln}}{V_a}\right)}{V_{std}} = 43.9 \text{ ppm, as } SO_2$$

Company: Monroe Energy
Location: Trainer, PA
Source: Main Flare
Test Date: 8/5/2016
Run # : 7

Laboratory Analysis of Isopropyl Alchohol (IPA) for H_2SO_4:

Standardization of Barium Chloride

H_2SO_4 used:	25.00 ml
BaCl used:	25.35 ml
Normality of $BaCl_2$ titrant:	0.0986 N
Volume of Blank titrant used:	0.00 milliliters

Titration of Sample

Volume of Sample:	100.0 milliliters
Volume of Sample Aliquot:	20.00 milliliters

1st titration

Volume of $BaCl_2$ titrant used:	0.30 milliliters

2nd titration

Volume of $BaCl_2$ titrant used:	0.30 milliliters

Company: Monroe Energy
Location: Trainer, PA
Source: Main Flare
Test Date: 8/5/2016
Run # : 8

Raw Test Data:

V_{ms}:	53.915 liter	V_{ma}:	16.200 liter
Y_d:	0.987 dimensionless	Y_d:	0.998 dimensionless
P_{bar}:	760.0 mmHg	P_{bar}:	760.0 mmHg
ΔH:	0.187 mmHg	ΔH:	0.187 in.H_2O
T_m:	28.3 °C	T_m:	22.8 °C

Laboratory Analysis of Isopropyl Alchohol (IPA) for H_2SO_4:

Normality of $BaCl_2$ titrant:	0.0986 N
Volume of Sample:	100 milliliters
Volume of Sample Aliquot:	20.00 milliliters
Volume of $BaCl_2$ titrant used:	0.175 milliliters
Volume of Blank titrant used:	0.00 milliliters

Calculations:

English Units (29.92 in. Hg, 68° F)

Volume sampled at standard conditions on dry basis:

$$V_{msstd} = \left(\frac{293}{760}\right) \times V_m \times \gamma \left[\frac{P_{bar} + \Delta H}{T_m}\right] = 51.737 \text{ liter}$$

Volume of combustion air added at standard conditions:

$$V_{mastd} = \left(\frac{293}{760}\right) \times V_m \times \gamma \left[\frac{P_{bar} + \Delta H}{T_m}\right] = 16.014 \text{ liter}$$

Volume of sample at standard conditions on dry basis:

$$V_{std} = V_{msstd} - V_{mastd} = 35.723 \text{ liter}$$

TRS concentration, as SO_2

$$C_{SO_2} = \frac{(12025)(N)(V_t - V_b)\left(\frac{V_{soln}}{V_a}\right)}{V_{std}} = 29.0 \text{ ppm, as } SO_2$$

Company: Monroe Energy
Location: Trainer, PA
Source: Main Flare
Test Date: 8/5/2016
Run # : 8

Laboratory Analysis of Isopropyl Alchohol (IPA) for H_2SO_4:

Standardization of Barium Chloride

H_2SO_4 used:	25.00 ml
BaCl used:	25.35 ml
Normality of $BaCl_2$ titrant:	0.0986 N
Volume of Blank titrant used:	0.00 milliliters

Titration of Sample

Volume of Sample:	100.0 milliliters
Volume of Sample Aliquot:	20.00 milliliters

1st titration

Volume of $BaCl_2$ titrant used:	0.15 milliliters

2nd titration

Volume of $BaCl_2$ titrant used:	0.20 milliliters

Company: Monroe Energy
Location: Trainer, PA
Source: Main Flare
Test Date: 8/5/2016
Run # : 9

Raw Test Data:

V_{ms}:	44.797 liter	V_{ma}:	17.600 liter
Y_d:	0.987 dimensionless	Y_d:	0.998 dimensionless
P_{bar}:	760.0 mmHg	P_{bar}:	760.0 mmHg
ΔH:	0.187 mmHg	ΔH:	0.187 in.H_2O
T_m:	28.7 °C	T_m:	23.3 °C

Laboratory Analysis of Isopropyl Alchohol (IPA) for H_2SO_4:

Normality of $BaCl_2$ titrant:	0.0986 N
Volume of Sample:	100 milliliters
Volume of Sample Aliquot:	20.00 milliliters
Volume of $BaCl_2$ titrant used:	0.325 milliliters
Volume of Blank titrant used:	0.00 milliliters

Calculations:

English Units (29.92 in. Hg, 68° F)

Volume sampled at standard conditions on dry basis:

$$V_{msstd} = \left(\frac{293}{760}\right) \times V_m \times \gamma \left[\frac{P_{bar} + \Delta H}{T_m}\right] = 42.935 \text{ liter}$$

Volume of combustion air added at standard conditions:

$$V_{mastd} = \left(\frac{293}{760}\right) \times V_m \times \gamma \left[\frac{P_{bar} + \Delta H}{T_m}\right] = 17.365 \text{ liter}$$

Volume of sample at standard conditions on dry basis:

$$V_{std} = V_{msstd} - V_{mastd} = 25.569 \text{ liter}$$

TRS concentration, as SO_2

$$C_{SO_2} = \frac{(12025)(N)(V_t - V_b)\left(\frac{V_{soln}}{V_a}\right)}{V_{std}} = 75.4 \text{ ppm, as } SO_2$$

Company: Monroe Energy
Location: Trainer, PA
Source: Main Flare
Test Date: 8/5/2016
Run # : 9

Laboratory Analysis of Isopropyl Alchohol (IPA) for H_2SO_4:

Standardization of Barium Chloride

H_2SO_4 used:	25.00 ml
BaCl used:	25.35 ml
Normality of $BaCl_2$ titrant:	0.0986 N
Volume of Blank titrant used:	0.00 milliliters

Titration of Sample

Volume of Sample:	100.0 milliliters
Volume of Sample Aliquot:	20.00 milliliters

1st titration

Volume of $BaCl_2$ titrant used:	0.35 milliliters

2nd titration

Volume of $BaCl_2$ titrant used:	0.30 milliliters

Company: Monroe Energy
Location: Trainer, PA
Source: Main Flare
Test Date: 8/5/2016
Run # : 10

Raw Test Data:

V_{ms}:	59.579 liter	V_{ma}:	17.800 liter
Y_d:	0.987 dimensionless	Y_d:	0.998 dimensionless
P_{bar}:	760.0 mmHg	P_{bar}:	760.0 mmHg
ΔH:	0.187 mmHg	ΔH:	0.187 in.H_2O
T_m:	28.9 °C	T_m:	23.3 °C

Laboratory Analysis of Isopropyl Alchohol (IPA) for H_2SO_4:

Normality of $BaCl_2$ titrant:	0.0986 N
Volume of Sample:	100 milliliters
Volume of Sample Aliquot:	20.00 milliliters
Volume of $BaCl_2$ titrant used:	0.25 milliliters
Volume of Blank titrant used:	0.00 milliliters

Calculations:

English Units (29.92 in. Hg, 68° F)

Volume sampled at standard conditions on dry basis:

$$V_{msstd} = \left(\frac{293}{760}\right) \times V_m \times \gamma \left[\frac{P_{bar} + \Delta H}{T_m}\right] = 57.066 \text{ liter}$$

Volume of combustion air added at standard conditions:

$$V_{mastd} = \left(\frac{293}{760}\right) \times V_m \times \gamma \left[\frac{P_{bar} + \Delta H}{T_m}\right] = 17.563 \text{ liter}$$

Volume of sample at standard conditions on dry basis:

$$V_{std} = V_{msstd} - V_{mastd} = 39.504 \text{ liter}$$

TRS concentration, as SO_2

$$C_{SO_2} = \frac{(12025)(N)(V_t - V_b)\left(\frac{V_{soln}}{V_a}\right)}{V_{std}} = 37.5 \text{ ppm, as } SO_2$$

Company: Monroe Energy
Location: Trainer, PA
Source: Main Flare
Test Date: 8/5/2016
Run # : 10

Laboratory Analysis of Isopropyl Alchohol (IPA) for H_2SO_4:

Standardization of Barium Chloride

H_2SO_4 used:	25.00 ml
BaCl used:	25.35 ml
Normality of $BaCl_2$ titrant:	0.0986 N
Volume of Blank titrant used:	0.00 milliliters

Titration of Sample

Volume of Sample:	100.0 milliliters
Volume of Sample Aliquot:	20.00 milliliters

1st titration

Volume of $BaCl_2$ titrant used:	0.25 milliliters

2nd titration

Volume of $BaCl_2$ titrant used:	0.25 milliliters

Company: Monroe Energy
Location: Trainer, PA
Source: Main Flare
Test Date: 8/5/2016
Run # : Performance Check #1

Raw Test Data:

V_{ms}:	59.494 liter	V_{ma}:	17.500 liter
Y_d:	0.987 dimensionless	Y_d:	0.998 dimensionless
P_{bar}:	760.0 mmHg	P_{bar}:	760.0 mmHg
ΔH:	0.187 mmHg	ΔH:	0.187 in.H_2O
T_m:	28.9 °C	T_m:	23.3 °C

Laboratory Analysis of Isopropyl Alchohol (IPA) for H_2SO_4:

Normality of $BaCl_2$ titrant:	0.0986 N
Volume of Sample:	100 milliliters
Volume of Sample Aliquot:	20.00 milliliters
Volume of $BaCl_2$ titrant used:	0.375 milliliters
Volume of Blank titrant used:	0.00 milliliters

Calculations:

English Units (29.92 in. Hg, 68° F)

Volume sampled at standard conditions on dry basis:

$$V_{msstd} = \left(\frac{293}{760}\right) \times V_m \times \gamma \left[\frac{P_{bar} + \Delta H}{T_m}\right] = 56.985 \text{ liter}$$

Volume of combustion air added at standard conditions:

$$V_{mastd} = \left(\frac{293}{760}\right) \times V_m \times \gamma \left[\frac{P_{bar} + \Delta H}{T_m}\right] = 17.267 \text{ liter}$$

Volume of sample at standard conditions on dry basis:

$$V_{std} = V_{msstd} - V_{mastd} = 39.718 \text{ liter}$$

TRS concentration, as SO_2

$$C_{RGM,as\,SO_2} = \frac{(12025)(N)(V_t - V_b)\left(\frac{V_{soln}}{V_a}\right)}{V_{std}} = 56.0 \text{ ppm, as } SO_2$$

Performance Check Recovery

Target Performance Check Concentration, C_{RGA} = 59.9 **ppm, as SO_2**

$$C_{SO_2} = \frac{C_{RGM}}{C_{RGA}} X100 = 93.4\ \%$$

Pass 100±20% tolerance

Company: Monroe Energy
Location: Trainer, PA
Source: Main Flare
Test Date: 8/5/2016
Run # : Performance Check #2

Raw Test Data:

V_{ms}:	59.607 liter	V_{ma}:	17.700 liter
Y_d:	0.987 dimensionless	Y_d:	0.998 dimensionless
P_{bar}:	760.0 mmHg	P_{bar}:	760.0 mmHg
ΔH:	0.187 mmHg	ΔH:	0.187 in.H_2O
T_m:	28.9 °C	T_m:	23.3 °C

Laboratory Analysis of Isopropyl Alchohol (IPA) for H_2SO_4:

Normality of $BaCl_2$ titrant:	0.0986 N
Volume of Sample:	100 milliliters
Volume of Sample Aliquot:	20.00 milliliters
Volume of $BaCl_2$ titrant used:	0.35 milliliters
Volume of Blank titrant used:	0.00 milliliters

Calculations:

English Units (29.92 in. Hg, 68° F)

Volume sampled at standard conditions on dry basis:

$$V_{msstd} = \left(\frac{293}{760}\right) \times V_m \times \gamma \left[\frac{P_{bar} + \Delta H}{T_m}\right] = 57.093 \text{ liter}$$

Volume of combustion air added at standard conditions:

$$V_{mastd} = \left(\frac{293}{760}\right) \times V_m \times \gamma \left[\frac{P_{bar} + \Delta H}{T_m}\right] = 17.464 \text{ liter}$$

Volume of sample at standard conditions on dry basis:

$$V_{std} = V_{msstd} - V_{mastd} = 39.629 \text{ liter}$$

TRS concentration, as SO_2

$$C_{RGM,as\,SO_2} = \frac{(12025)(N)(V_t - V_b)\left(\frac{V_{soln}}{V_a}\right)}{V_{std}} = 52.4 \text{ ppm, as } SO_2$$

Performance Check Recovery

Target Performance Check Concentration, C_{RGA} = 59.9 **ppm, as SO_2**

$$C_{SO_2} = \frac{C_{RGM}}{C_{RGA}} X100 = 87.4\ \%$$

Pass 100±20% tolerance

Average Performance Check Recovery, R = 90.4 %

Pass 100±20% tolerance

Company: Monroe Energy
Location: Trainer, PA
Source: Main Flare
Test Date: 8/5/2016
Run # : Performance Checks

Laboratory Analysis of Isopropyl Alchohol (IPA) for H_2SO_4:

Standardization of Barium Chloride

H_2SO_4 used:	25.00 ml
BaCl used:	25.35 ml
Normality of $BaCl_2$ titrant:	0.0986 N
Volume of Blank titrant used:	0.00 milliliters

Titration of Performance Check Sample #1

Target Concentrations

H_2S Target Concentration:	15.0 ppmv db
COS Target Concentration:	14.8 ppmv db
CS_2 Target Concentration:	15.1 ppmv db
Total TRS Equivalent Sulfur Concentration:	59.9 ppmv db

Volume of Sample:	100 milliliters
Volume of Sample Aliquot:	20 milliliters

1st titration

Volume of $BaCl_2$ titrant used:	0.40 milliliters

2nd titration

Volume of $BaCl_2$ titrant used:	0.35 milliliters

Titration of Performance Check Sample #2

Target Concentrations

H_2S Target Concentration:	15.0 ppmv db
COS Target Concentration:	14.8 ppmv db
CS_2 Target Concentration:	15.1 ppmv db
Total TRS Equivalent Sulfur Concentration:	59.9 ppmv db

Volume of Sample:	100 milliliters
Volume of Sample Aliquot:	20 milliliters

1st titration

Volume of $BaCl_2$ titrant used:	0.35 milliliters

2nd titration

Volume of $BaCl_2$ titrant used:	0.35 milliliters

APPENDIX B

Field Data

1044 TB

FIELD DATA

PLANT	Monroe Energy	AMBIENT TEMPERATURE	81	PROBE HEATER SETTING	NA
DATE	8/2/16	BAROMETRIC PRESSURE	29.94	HEATER BOX SETTING	NA
LOCATION	Trainer PA	ASSUMED MOISTURE, %		METER H_a	
OPERATOR	JC/SH	PROBE LENGTH, in	NA	C_p FACTOR	
STACK NO	Main Flare	NOZZLE DIAMETER, in	NA	V_p FACTOR	0.99
RUN NO	M4-1	STACK DIAMETER, in	NA	PITOT NO	NA
SAMPLE BOX NO	SL 25	MINUTES PER POINT	5		
METER BOX NO	5023 796	NUMBER OF POINTS			
START TIME		NUMBER OF PORTS	NA		

WEIGHT OF PARTICULATE, mg		
Filter No		
Sample		
Final wt		
Tare wt		
Wt gain		
TOTAL		mg

CONDENSATION

CLOCK TIME (Hrs)	TRAVERSE POINT NUMBER	SAMPLING TIME (θ) min.	STATIC PRESSURE (in. H_2O)	STACK TEMP (T_s) °F	VELOCITY HEAD (ΔP_s)	VELOCITY HEAD (ΔP_s)	PRESSURE DIFFERENTIAL ACROSS METER ORIFICE LPM ~~(mm H₂O)~~ ACTUAL	DESIRED	GAS SAMPLE VOLUME (Vm) ~~ft³~~ m³	GAS SAMPLE TEMP AT DRY GAS METER INLET ($T_{m_{in}}$) °F	OUTLET ($T_{m_{out}}$) °F	FILTER EXIT GAS TEMP. °F	PROBE TEMP °F	AUXILIARY TEMP. °F	LAST IMPINGER OUTLET TEMP. °F	PUMP VACUUM (in. Hg)
910	1	0	NA	NA	NA	NA	1.5		13.7334	76	76	NA	NA	NA	68	
	2	5					1.5		13.7386	76	76				68	
	3	10					1.5		13.7432	76	76				68	
	4	15					1.5		13.7500	76	76				68	
	5	20					1.5		13.7594	75	76				65	
	6	25					1.5		13.7658	75	76				67	
940	7	30							13.7739							
AVERAGE							1.5 LPM		0.0405	75.67					68	

VOLUME OR WEIGHT OF LIQUID COLLECTED	IMPINGER VOLUME (ml) OR WEIGHT (g) #1	#2	#3	#4	#5	SILICA GEL WEIGHT g
FINAL						
INITIAL						
LIQUID COLLECTED						
TOTAL LIQUID COLLECTED (specify ml or g)						

ORSAT DATA	TIME	CO_2	O_2
TRIAL 1			
TRIAL 2			
TRIAL 3			
Average			

LEAK CHECK	
SYSTEM PRE:	0.000 CFM @ 15" Hg
POST:	0.000 CFM @ 15" Hg
PITOT PRE:	" H_2O
POST:	" H_2O

IMPINGER RECOVERY DATA SHEET

ARI ENVIRONMENTAL INC.

Company: Monroe Energy
Location: Trainer PA
Source: Main Flare
Run No.: M4-1

Date Set-up: 8/2/16
Test Date: 8/2/16
Date Recovered: 8/2/16
USEPA Method: Alt 008 M4
Corresponding Filter Wgt: NA
Filter Container No: NA

Measurement Method: Weight or Volume

Impinger No.	Impinger Contents	Initial wt/vol g/mL	Final wt/vol g/mL	Difference wt/vol g/mL	Sample Container No.
1	H_2O	108.1 g	~~102.5~~ 107.7 g	-.4 g	
2	H_2O	102.5 g	102.9 g	.4 g	
3	Empty	93.5 g	93.5 g	0 g	
4	Silica Gel	104.7 g	105.2 g	.5 g	
5					
6					
Net Gain				.5 g	

Field Balance Calibration Check: Reference Mass: _____ gram

Measured Mass: _____ gram

Absolute Difference: _____ gram (≤ 0.5 gram)

1150
1120

FIELD DATA

PLANT	Monroe	AMBIENT TEMPERATURE	81	PROBE HEATER SETTING	
DATE	5/2/16	BAROMETRIC PRESSURE	29.44	HEATER BOX SETTING	
LOCATION	Trainer PA	ASSUMED MOISTURE, %		METER H_a	
OPERATOR	JC/SH	PROBE LENGTH, in		C_p FACTOR	
STACK NO	mainstack	NOZZLE DIAMETER, in		N_2 FACTOR	.968
RUN NO	M4 - 2	STACK DIAMETER, in		PITOT NO	
SAMPLE BOX NO	SK25	MINUTES PER POINT	5		
METER BOX NO	800379	NUMBER OF POINTS			
START TIME	944	NUMBER OF PORTS			

WEIGHT OF PARTICULATE, mg	
Filter No.	
Scrub.	
Filter wt.	
Tare wt.	
Wt. gain	
TOTAL	mg

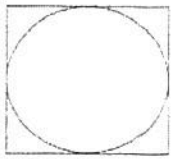

CLOCK TIME (Hrs)	TRAVERSE POINT NUMBER	SAMPLING TIME (θ) min.	STATIC PRESSURE (in. H_2O)	STACK TEMP (T_s) °F	VELOCITY HEAD (ΔP_s)	VELOCITY HEAD (ΔP_s)	PRESSURE DIFFERENTIAL ACROSS METER ORIFICE (ΔH) in. H_2O ACTUAL	DESIRED	GAS SAMPLE VOLUME (V_m) m^3	GAS SAMPLE TEMP AT DRY GAS METER INLET ($T_{m_{in}}$) °F	OUTLET ($T_{m_{out}}$) °F	FILTER EXIT GAS TEMP. °F	PROBE TEMP °F	AUXILIARY TEMP. °F	LAST IMPINGER OUTLET TEMP. F	PUMP VACUUM (in. Hg)
944	1	0	N/A	N/A	N/A	N/A	1.5		13.7740	76	76	N/A	N/A	N/A	68	
	2	5					1.5		13.7818	76	76				68	
	3	10					1.5		13.7888	76	76				68	
	4	15					1.5		13.7946	75	75				68	
	5	20					1.5		13.8002	75	76				68	
	6	25					1.5		13.8102	75	75				68	
1014		30							13.8176							
AVERAGE							1.5		0.0436 / 1.540 ft³	75.58					68	

VOLUME OR WEIGHT OF LIQUID COLLECTED	IMPINGER VOLUME (ml) OR WEIGHT (g) #1	#2	#3	#4	#5	SILICA GEL WEIGHT g
FINAL						
INITIAL						
LIQUID COLLECTED						
TOTAL LIQUID COLLECTED (specify ml or g)						

ORSAT DATA	TIME	CO_2	O_2
TRIAL 1			
TRIAL 2			
TRIAL 3			
Average			

LEAK CHECK	
SYSTEM PRE:	0.01 CFM @ 15" Hg
POST:	0.013 CFM @ 15" Hg
PITOT PRE:	___ in. H_2O
POST:	___ in. H_2O

IMPINGER RECOVERY DATA SHEET

ARI ENVIRONMENTAL INC.

Company: Moxie Energy
Location: Trainer PA
Source: Main Flare
Run No.: M4-2

Date Set-up: 8/2/16
Test Date: 8/2/16
Date Recovered: 8/2/16
USEPA Method: ALT 009 - M4
Corresponding Filter Wgt: NA
Filter Container No: NA

Measurement Method: Weight or Volume

Impinger No.	Impinger Contents	Initial wt/vol g/mL	Final wt/vol g/mL	Difference wt/vol g/mL	Sample Container No.
1	H2O	116.2 g	115.9 g	-.3 g	
2	H2O	112.3 g	112.0 g	-.3 g	
3	Empty	84.8 g	84.9 g	.1 g	
4	S Gel	105.9 g	106.2 g	.3 g	
5					
6					
Net Gain				-.2	

Field Balance Calibration Check: Reference Mass: _____ gram

Measured Mass: _____ gram

Absolute Difference: _____ gram (≤ 0.5 gram)

1148
1154

FIELD DATA

PLANT	Monroe	AMBIENT TEMPERATURE	81	PROBE HEATER SETTING	
DATE	8/2/16	BAROMETRIC PRESSURE	29.94	HEATER BOX SETTING	
LOCATION	Toledo PA	ASSUMED MOISTURE %		METER $H_@$	
OPERATOR	SH/JC	PROBE LENGTH, in		C, FACTOR	
STACK NO	Main Flare	NOZZLE DIAMETER, in		Y_d FACTOR	.998
RUN NO	M4 - 3	STACK DIAMETER, in		PITOT NO	
SAMPLE BOX NO	S1625	MINUTES PER POINT	5		
METER BOX NO	800 379 6	NUMBER OF POINTS			
START TIME	1018	NUMBER OF PORTS			

WEIGHT OF PARTICULATE, mg		
Filter No		
Sample		
Final wt		
Tare wt		
Wt gain		
TOTAL		mg

CLOCK TIME (Hrs)	TRAVERSE POINT NUMBER	SAMPLING TIME (Θ) min.	STATIC PRESSURE (in. H_2O)	STACK TEMP (T_s) °F	VELOCITY HEAD (ΔP_s)	VELOCITY HEAD (ΔP_s)	PRESSURE DIFFERENTIAL ACROSS METER ORIFICE (ΔH) in. H_2O ACTUAL	PRESSURE DIFFERENTIAL ACROSS METER ORIFICE (ΔH) in. H_2O DESIRED	GAS SAMPLE VOLUME (V_m) ft³	GAS SAMPLE TEMP AT DRY GAS METER INLET ($T_{m_{in}}$) °F	GAS SAMPLE TEMP AT DRY GAS METER OUTLET ($T_{m_{out}}$) °F	FILTER EXIT GAS TEMP. °F	PROBE TEMP °F	AUXILIARY TEMP. °F	LAST IMPINGER OUTLET TEMP. °F	PUMP VACUUM (in. Hg)
1018	1	0	N/A	N/A	N/A	N/A	1.5		13.8180	75	75	N/A	N/A	N/A	68	
	2	5					1.5		13.8254	75	75				68	
	3	10					1.5		13.8316	75	76				68	
	4	15					1.5		13.8402	75	75				68	
	5	20					1.5		13.8452	75	75				68	
	6	25					1.5		13.8510	75	75				68	
1048		30							13.8580							
AVERAGE							1.5 LPM		0.0400 / 1.413 ft³	75					68	

VOLUME OR WEIGHT OF LIQUID COLLECTED	IMPINGER VOLUME (ml) OR WEIGHT (g) #1	#2	#3	#4	#5	SILICA GEL WEIGHT g
FINAL						
INITIAL						
LIQUID COLLECTED						
TOTAL LIQUID COLLECTED (specify ml or g)						

ORSAT DATA	TIME	CO_2	O_2
TRIAL 1			
TRIAL 2			
TRIAL 3			
Average			

LEAK CHECK	
SYSTEM PRE:	0.000 CFM@15" Hg
POST:	0.000 CFM@15" Hg
PITOT PRE:	@ 3" H_2O
POST:	@ 3" H_2O

Form FDF 4003.00

15/002
c1.ps

IMPINGER RECOVERY DATA SHEET

ARI ENVIRONMENTAL INC.

Company:	Monroe Energy	Date Set-up:	8/2/16
Location:	Trainer PA	Test Date:	8/2/16
Source:	Main Flare	Date Recovered:	8/2/16
Run No.:	M4-3	USEPA Method:	ALT 008 - M4
		Corresponding Filter Wgt:	NA
		Filter Container No:	NA

Measurement Method: Weight or Volume

Impinger No.	Impinger Contents	Initial wt/vol g/mL	Final wt/vol g/mL	Difference wt/vol g/mL	Sample Container No.
1	H2O	122.4 g	122.1 g	-.3 g	
2	H2O	115.8 g	115.9 g	.1 g	
3	Empty	93.3 g	93.5 g	.2 g	
4	S Gel	108.4 g	108.9 g	.5 g	
5					
6					
Net Gain				.5 g	

Field Balance Calibration Check: Reference Mass: _____ gram

Measured Mass: _____ gram

Absolute Difference: _____ gram (≤ 0.5 gram)

1228

FIELD DATA

PLANT	Monroe C	AMBIENT TEMPERATURE	81	PROBE HEATER SETTING	
DATE	8-2-16	BAROMETRIC PRESSURE	29.97	HEATER BOX SETTING	
LOCATION	Trainer PA	ASSUMED MOISTURE %		METER $H_@$	
OPERATOR	SH / SK	PROBE LENGTH, in		C_p FACTOR	
STACK NO	main Flare	NOZZLE DIAMETER, in		Y_c FACTOR	.998
RUN NO	M4 - 4	STACK DIAMETER, in		PITOT NO	
SAMPLE BOX NO	SK25	MINUTES PER POINT	5		
METER BOX NO	8003794	NUMBER OF POINTS			
START TIME	1052	NUMBER OF PORTS			

WEIGHT OF PARTICULATE, mg	
Filter No	
Sample	
Final wt	
Tare wt	
Wt gain	
TOTAL	mg

CLOCK TIME (Hrs)	TRAVERSE POINT NUMBER	SAMPLING TIME (θ) min.	STATIC PRESSURE (in. H_2O)	STACK TEMP (T_s) °F	VELOCITY HEAD (ΔP_s)	VELOCITY HEAD ($\sqrt{\Delta P_s}$)	PRESSURE DIFFERENTIAL ACROSS METER ORIFICE (ΔH) in. H_2O ACTUAL	DESIRED	GAS SAMPLE VOLUME (V_m) ft^3 / m^3	GAS SAMPLE TEMP AT DRY GAS METER INLET ($T_{m_{in}}$) °F	OUTLET ($T_{m_{out}}$) °F	FILTER EXIT GAS TEMP. °F	PROBE TEMP °F	AUXILIARY TEMP. °F	LAST IMPINGER OUTLET TEMP. °F	PUMP VACUUM (in. Hg)
1052	1	0	N/A	N/A	N/A	N/A	1.5		13.9582	75	75	NA	N/A	N/A	68	
	2	5					1.5		13.8668	75	75				67	
	3	10					1.5		13.8736	75	75				64	
	4	15					1.5		13.8814	75	75				64	
	5	20					1.5		13.8862	75	75				63	
	6	25					1.5		13.893	75	76				63	
1122		30							13.9014							
AVERAGE							1.5		0.0472 / 1.336 m^3	75.08					68	

VOLUME OR WEIGHT OF LIQUID COLLECTED	IMPINGER VOLUME (ml) OR WEIGHT (g) #1	#2	#3	#4	#5	SILICA GEL WEIGHT #
FINAL						
INITIAL						
LIQUID COLLECTED						
TOTAL LIQUID COLLECTED (specify ml or g)						

ORSAT DATA	TIME	CO_2	O_2
TRIAL 1			
TRIAL 2			
TRIAL 3			
Average			

LEAK CHECK	
SYSTEM PRE: 0.00	CFM @ 15" Hg
POST: 0.000	CFM @ 15" Hg
PITOT PRE:	2 x 3" H_2O
POST:	2 x 3" H_2O

IMPINGER RECO' RY DATA SHEET

ARI ENVIRONMENTAL INC.

Company: Monroe Energy
Location: Trainer PA
Source: Main Plane
Run No.: M4-4

Date Set-up: 8/2/16
Test Date: 8/2/16
Date Recovered: 8/2/16
USEPA Method: ALT 008 - M4
Corresponding Filter Wgt: NA
Filter Container No: NA

Measurement Method: Weight or Volume

Impinger No.	Impinger Contents	Initial wt/vol g/mL	Final wt/vol g/mL	Difference wt/vol g/mL	Sample Container No.
1	H_2O	107.7 g	107.5 g	-.2	
2	H_2O	102.9 g	102.6 g	-.3	
3	Empty	93.5 g	93.6 g	.1	
4	Silica Gel	105.2 g	105.5 g	.3	
5					
6					
Net Gain				-.1	

Field Balance Calibration Check: Reference Mass: _____ gram

Measured Mass: _____ gram

Absolute Difference: _____ gram (≤ 0.5 gram)

1233

1303

FIELD DATA

PLANT	Monroe	AMBIENT TEMPERATURE	81	PROBE HEATER SETTING	
DATE	8/2/16	BAROMETRIC PRESSURE	29.44	HEATER BOX SETTING	
LOCATION	Trainer PA	ASSUMED MOISTURE, %		METER $H_@$	
OPERATOR	JC/SH	PROBE LENGTH, in		C_p FACTOR	
STACK NO	Main flare	NOZZLE DIAMETER, in		V_m FACTOR	.998
RUN NO	M4 - 5	STACK DIAMETER, in		PITOT NO	
SAMPLE BOX NO	SK25	MINUTES PER POINT	5		
METER BOX NO	8003796	NUMBER OF POINTS			
START TIME	1127	NUMBER OF PORTS			

WEIGHT OF PARTICULATE, mg		
Filter No		
Sample		
Final wt		
Tare wt		
Wt gain		
TOTAL		mg

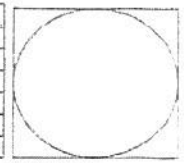

CROSS SECTION

CLOCK TIME (Hrs)	TRAVERSE POINT NUMBER	SAMPLING TIME (θ) min.	STATIC PRESSURE (in. H_2O)	STACK TEMP (T_s) °F	VELOCITY HEAD (ΔP_s)	VELOCITY HEAD (ΔP_s)	PRESSURE DIFFERENTIAL ACROSS METER ORIFICE (ΔH) in. H_2O ACTUAL	PRESSURE DIFFERENTIAL ACROSS METER ORIFICE (ΔH) in. H_2O DESIRED	GAS SAMPLE VOLUME (Vm) ~~ft³~~ m³	GAS SAMPLE TEMP AT DRY GAS METER INLET ($T_{m_{in}}$) °F	GAS SAMPLE TEMP AT DRY GAS METER OUTLET ($T_{m_{out}}$) °F	FILTER EXIT GAS TEMP. °F	PROBE TEMP °F	AUXILIARY TEMP. °F	LAST IMPINGER OUTLET TEMP. °F	PUMP VACUUM (in. Hg)
1127	1	0	N/A	N/A	N/A	N/A	1.5		13.9016	76	76				68	
	2	5					1.5		13.9096	76	76				68	
	3	10					1.5		13.9152	76	76				68	
	4	15					1.5		13.9222	77	76				68	
	5	20					1.5		13.9290	76	76				68	
	6	25					1.5		13.9362	76	76				68	
1157		30							13.9430							
AVERAGE							1.5		0.0414	76.08					68	

VOLUME OR WEIGHT OF LIQUID COLLECTED	IMPINGER VOLUME (ml) OR WEIGHT (g) #1	#2	#3	#4	#5	SILICA GEL WEIGHT g
FINAL						
INITIAL						
LIQUID COLLECTED						
TOTAL LIQUID COLLECTED (specify ml or g)						

ORSAT DATA	TIME	CO_2	O_2
TRIAL 1			
TRIAL 2			
TRIAL 3			
Average			

LEAK CHECK	
SYSTEM PRE:	0.000 CFM @ 15" Hg
POST:	0.000 CFM @ 15" Hg
PITOT PRE:	± 3" H_2O
POST:	± 3" H_2O

Form FOR 4003 07

IMPINGER RECOVERY DATA SHEET

ARI ENVIRONMENTAL INC.

Company: Monroe Energy
Location: Trainer PA
Source: Main Flare
Run No.: M4-5

Date Set-up: 8/2/16
Test Date: 8/2/16
Date Recovered: 8/2/16
USEPA Method: ALT008 - M4
Corresponding Filter Wgt: NA
Filter Container No: NA

Measurement Method: Weight or Volume

Impinger No.	Impinger Contents	Initial wt/vol g/mL	Final wt/vol g/mL	Difference wt/vol g/mL	Sample Container No.
1	H_2O	115.9 g	115.7 g	-.2	
2	H_2O	112.0 g	112.1 g	.1	
3	Empty	84.9 g	85.0 g	.1	
4	Silica Gel	106.2 g	106.5	.3	
5					
6					
Net Gain				.3	

Field Balance Calibration Check: Reference Mass: _____ gram

Measured Mass: _____ gram

Absolute Difference: _____ gram (≤ 0.5 gram)

1301
1337

ARI

FIELD DATA

PLANT	Monroe	AMBIENT TEMPERATURE	81	PROBE HEATER SETTING	
DATE	5-2-16	BAROMETRIC PRESSURE	29.54	HEATER BOX SETTING	
LOCATION		ASSUMED MOISTURE, %		METER $H_@$	
OPERATOR		PROBE LENGTH, in		C_p FACTOR	
STACK NO		NOZZLE DIAMETER, in		Y_d FACTOR	.998
RUN NO	M4-6	STACK DIAMETER, in		PITOT NO	
SAMPLE BOX NO	SK25	MINUTES PER POINT	5		
METER BOX NO		NUMBER OF POINTS			
START TIME		NUMBER OF PORTS			

WEIGHT OF PARTICULATE, mg		
Filter No		
Sample		
Final wt		
Tare wt		
Wt gain		
TOTAL		mg

CLOCK TIME (Hrs)	TRAVERSE POINT NUMBER	SAMPLING TIME (Θ) min.	STATIC PRESSURE (in. H_2O)	STACK TEMP (T_s) °F	VELOCITY HEAD (ΔP_s)	VELOCITY HEAD (ΔP_n)	PRESSURE DIFFERENTIAL ACROSS METER ORIFICE (ΔH) in. H_2O ACTUAL	DESIRED	GAS SAMPLE VOLUME (Vm) ft³	GAS SAMPLE TEMP AT DRY GAS METER INLET (Tm_{in}) °F	OUTLET (Tm_{out}) °F	FILTER EXIT GAS TEMP. °F	PROBE TEMP °F	AUXILIARY TEMP. °F	LAST IMPINGER OUTLET TEMP. °F	PUMP VACUUM (in. Hg)
1201	1	0	N/A	N/A	N/A	N/A	1.5		13.9432	76	76	N/A	N/A	N/A	68	
	2	5					1.5		13.9514	76	76				68	
	3	10					1.5		13.9602	76	76				68	
	4	15					1.5		13.9626	76	76				68	
	5	20					1.5		13.9682	76	76				68	
	6	25					1.5		13.9738	76	76				68	
1231		30							13.9800							
AVERAGE							1.5		0.0368 1.3004 ft³	76					68	

VOLUME OR WEIGHT OF LIQUID COLLECTED	IMPINGER VOLUME (ml) OR WEIGHT (g) #1	#2	#3	#4	#5	SILICA GEL WEIGHT #6
FINAL						
INITIAL						
LIQUID COLLECTED						
TOTAL LIQUID COLLECTED (specify #1-#5)						

ORSAT DATA	TIME	CO_2	O_2
TRIAL 1			
TRIAL 2			
TRIAL 3			
Average			

LEAK CHECK	
SYSTEM PRE:	0.001 CFM @ 15" Hg
POST:	0.000 CFM @ 15" Hg
PITOT PRE:	@ 3" H_2O
POST:	@ 3" H_2O

Form FDF 4/08

IMPINGER RECOVERY DATA SHEET

ARI ENVIRONMENTAL INC.

Company:	Monroe Energy	Date Set-up:	8/2/16
Location:	Trainer PA	Test Date:	8/2/16
Source:	Main Flare	Date Recovered:	8/2/16
Run No.:	M4-6	USEPA Method:	ALT 008 - M4
		Corresponding Filter Wgt:	NA
		Filter Container No:	NA

Measurement Method: Weight or Volume

Impinger No.	Impinger Contents	Initial wt/vol g/mL	Final wt/vol g/mL	Difference wt/vol g/mL	Sample Container No.
1	H_2O	122.1 g	121.9 g	-.2 g	
2	H_2O	115.9 g	115.9 g	0 g	
3	Empty	93.5 g	93.3 g	-.2 g	
4	Silica Gel	108.9 g	109.3 g	.4 g	
5					
6					
Net Gain				0 g	

Field Balance Calibration Check: Reference Mass: _____ gram

Measured Mass: _____ gram

Absolute Difference: _____ gram (≤ 0.5 gram)

1412

FIELD DATA

PLANT	Monric	AMBIENT TEMPERATURE		PROBE HEATER SETTING	
DATE	8/2/16	BAROMETRIC PRESSURE	29.44	HEATER BOX SETTING	
LOCATION	Ironic PA	ASSUMED MOISTURE, %		METER H_a	
OPERATOR	JC/SH	PROBE LENGTH, in		C_p FACTOR	
STACK NO	Main flare	NOZZLE DIAMETER, in		Y_d FACTOR	.448
RUN NO	~~SK25~~ M4-7	STACK DIAMETER, in		PITOT NO	
SAMPLE BOX NO	SK25	MINUTES PER POINT	5		
METER BOX NO	8003716	NUMBER OF POINTS			
START TIME	1236	NUMBER OF PORTS			

WEIGHT OF PARTICULATE, mg	
Filter No	
Sample	
Final wt	
Tare wt	
Wt gain	
TOTAL	mg

CLOCK TIME (Hrs)	TRAVERSE POINT NUMBER	SAMPLING TIME (θ) min.	STATIC PRESSURE (in. H_2O)	STACK TEMP (T_s) °F	VELOCITY HEAD (ΔP_s)	VELOCITY HEAD (ΔP_s)	PRESSURE DIFFERENTIAL ACROSS METER ORIFICE (ΔH) in. H_2O ACTUAL	PRESSURE DIFFERENTIAL ACROSS METER ORIFICE (ΔH) in. H_2O DESIRED	GAS SAMPLE VOLUME (Vm) ft³	GAS SAMPLE TEMP AT DRY GAS METER INLET (Tm_{in}) °F	GAS SAMPLE TEMP AT DRY GAS METER OUTLET (Tm_{out}) °F	FILTER EXIT GAS TEMP. °F	PROBE TEMP °F	AUXILIARY TEMP. °F	LAST IMPINGER OUTLET TEMP. °F	PUMP VACUUM (in. Hg)
1236	1	0	N/A	N/A	N/A	N/A	1.5		13.9804	76	76	N/A	N/A	N/A	68	
	2	5					1.5		13.9876	76	76				67	
	3	10					1.5		13.9952	76	76				67	
	4	15					1.5		14.0032	76	76				66	
	5	20					1.5		14.0124	76	76				65	
	6	25					1.5		14.0162	76	76				60	
1306		36					1.5		14.0202							
AVERAGE							1.5		0.0398 1.406 ft³	76					68	

VOLUME OR WEIGHT OF LIQUID COLLECTED	IMPINGER VOLUME (ml) OR WEIGHT (g) #1	#2	#3	#4	#5	SILICA GEL WEIGHT g
FINAL						
INITIAL						
LIQUID COLLECTED						
TOTAL LIQUID COLLECTED (specify ml or g)						

ORSAT DATA	TIME	CO_2	O_2
TRIAL 1			
TRIAL 2			
TRIAL 3			
Average			

LEAK CHECK	
SYSTEM PRE:	0.00 CFM @ 15" Hg
POST:	0.000 CFM @ 15" Hg
PITOT PRE:	@ ± 3" H_2O
POST:	@ ± 3" H_2O

Form FDS-4202.xls

IMPINGER RECOV' ' DATA SHEET

ARI ENVIRONMENTAL INC.

Company: Monroe Energy
Location: Trainer PA
Source: Main Flare
Run No.: M4-7

Date Set-up: 8/2/16
Test Date: 8/2/16
Date Recovered: 8/2/16
USEPA Method: ALT 005 - M4
Corresponding Filter Wgt: NA
Filter Container No: NA

Measurement Method: Weight or Volume

Impinger No.	Impinger Contents	Initial wt/vol g/mL	Final wt/vol g/mL	Difference wt/vol g/mL	Sample Container No.
1	H_2O	107.5 g	107.3 g	-.2 g	
2	H_2O	102.6 g	102.5 g	-.1 g	
3	Empty	93.6 g	93.5 g	-.1 g	
4	Silica Gel	105.5 g	106.0 g	.5 g	
5					
6					
Net Gain				.1 g	

Field Balance Calibration Check: Reference Mass: _____ gram

Measured Mass: _____ gram

Absolute Difference: _____ gram (≤ 0.5 gram)

1416

1476

FIELD DATA

PLANT	Monroe	AMBIENT TEMPERATURE	81	PROBE HEATER SETTING	
DATE	8/21/16	BAROMETRIC PRESSURE	29.94	HEATER BOX SETTING	
LOCATION	Trainer PA	ASSUMED MOISTURE, %		METER $H_@$	
OPERATOR		PROBE LENGTH, in		C_p FACTOR	
STACK NO		NOZZLE DIAMETER, in		Y_d FACTOR	.998
RUN NO	M4 - 8	STACK DIAMETER, in		PITOT NO	
SAMPLE BOX NO	SK25	MINUTES PER POINT	5		
METER BOX NO	803796	NUMBER OF POINTS			
START TIME		NUMBER OF PORTS			

WEIGHT OF PARTICULATE, mg		
Filter No.		
Sample		
Final wt.		
Tare wt.		
Wt. gain		
TOTAL	mg	

CROSS SECTION

CLOCK TIME (Hrs)	TRAVERSE POINT NUMBER	SAMPLING TIME (θ) min.	STATIC PRESSURE (in. H_2O)	STACK TEMP (T_s) °F	VELOCITY HEAD (ΔP_s)	VELOCITY HEAD (ΔP_s)	PRESSURE DIFFERENTIAL ACROSS METER ORIFICE (ΔH) in. H_2O ACTUAL	DESIRED	GAS SAMPLE VOLUME (Vm) ft^3	GAS SAMPLE TEMP AT DRY GAS METER INLET ($T_{m_{in}}$) °F	OUTLET ($T_{m_{out}}$) °F	FILTER EXIT GAS TEMP. °F	PROBE TEMP °F	AUXILIARY TEMP. °F	LAST IMPINGER OUTLET TEMP. °F	PUMP VACUUM (in. Hg)
110	1	0	N/A	N/A	N/A	N/A	1.5		14.0304	75	76				68	
	2	5					1.5		14.0368	75	76				68	
	3	10					1.5		14.0342	76	76				68	
	4	15					1.5		14.0416	76	76				67	
	5	20					1.5		14.0482	76	76				68	
	6	25					1.5		14.0548	76	76				68	
		30							14.0604	76	76				67	
AVERAGE							1.5		0.0400 1.413 ft³	75.83					68	

VOLUME OR WEIGHT OF LIQUID COLLECTED	IMPINGER VOLUME (ml) OR WEIGHT (g) #1	#2	#3	#4	#5	SILICA GEL WEIGHT g
FINAL						
INITIAL						
LIQUID COLLECTED						
TOTAL LIQUID COLLECTED (specify ml or g)						

ORSAT DATA	TIME	CO_2	O_2
TRIAL 1			
TRIAL 2			
TRIAL 3			
Average			

LEAK CHECK	
SYSTEM PRE:	0.000 CFM@15" Hg
POST:	0.000 CFM@15" Hg
PITOT PRE:	" H_2O
POST:	" H_2O

Form FDF 4503.00

IMPINGER RECOVERY DATA SHEET

ARI ENVIRONMENTAL INC.

Company: Monroe Energy
Location: Trainer PA
Source: Main Flare
Run No.: M4-8

Date Set-up: 8/2/16
Test Date: 8/2/16
Date Recovered: 8/2/16
USEPA Method: ALT005 - M4
Corresponding Filter Wgt: NA
Filter Container No: NA

Measurement Method: Weight or Volume

Impinger No.	Impinger Contents	Initial wt/vol g/mL	Final wt/vol g/mL	Difference wt/vol g/mL	Sample Container No.
1	H_2O	115.7 g	115.6 g	.1 g	
2	H_2O	112.1 g	112.1 g	0 g	
3	Empty	85.0 g	85.0 g	0 g	
4	Silica Gel	106.5 g	107.0 g	.5 g	
5					
6					
Net Gain				.4 g	

Field Balance Calibration Check: Reference Mass: _____ gram

Measured Mass: _____ gram

Absolute Difference: _____ gram (≤ 0.5 gram)

1453

1523

FIELD DATA

PLANT	Monroe	AMBIENT TEMPERATURE	81
DATE	8/2/16	BAROMETRIC PRESSURE	29.94
LOCATION	Tronex PA	ASSUMED MOISTURE, %	
OPERATOR	SH SC	PROBE LENGTH, in	
STACK NO	Man Flare	NOZZLE DIAMETER, in	
RUN NO	M4 - 4	STACK DIAMETER, in	
SAMPLE BOX NO	SK25	MINUTES PER POINT	5
METER BOX NO	8003716	NUMBER OF POINTS	
START TIME	1347	NUMBER OF PORTS	

PROBE HEATER SETTING	
HEATER BOX SETTING	
METER $H_@$	
C_p FACTOR	
Y_d FACTOR	.998
PITOT NO	

WEIGHT OF PARTICULATE, mg		
Filter No		
Sample		
Final wt		
Tare wt		
Wt gain		
TOTAL		mg

CLOCK TIME (Hrs)	TRAVERSE POINT NUMBER	SAMPLING TIME (θ) min.	STATIC PRESSURE (in. H_2O)	STACK TEMP (T_s) °F	VELOCITY HEAD (ΔP_s)	VELOCITY HEAD (ΔP_s)	PRESSURE DIFFERENTIAL ACROSS METER ORIFICE (ΔH) in. H_2O ACTUAL	PRESSURE DIFFERENTIAL ACROSS METER ORIFICE (ΔH) in. H_2O DESIRED	GAS SAMPLE VOLUME (Vm) ~~ft³~~ m³	GAS SAMPLE TEMP AT DRY GAS METER INLET (Tm_{in}) °F	GAS SAMPLE TEMP AT DRY GAS METER OUTLET (Tm_{out}) °F	FILTER EXIT GAS TEMP. °F	PROBE TEMP °F	AUXILIARY TEMP. °F	LAST IMPINGER OUTLET TEMP. °F	PUMP VACUUM (in. Hg)
1347	1	0	N/A	N/A	N/A	N/A	1.5		14.0610	76	77	N/A	N/A	N/A	68	
	2	5					1.5		14.0664	76	77				68	
	3	10					1.5		14.0736	76	77				68	
	4	15					1.5		14.0804	76	77				68	
	5	20					1.5		14.0860	76	77				68	
	6	25					1.5		14.0928	76	77				68	
1427		30	—	—	—	—			14.0988							
AVERAGE							1.5		0.0378 1.3354 ft³	76.5					68	

VOLUME OR WEIGHT OF LIQUID COLLECTED	IMPINGER VOLUME (ml) OR WEIGHT (g) #1	#2	#3	#4	#5	SILICA GEL WEIGHT g
FINAL						
INITIAL						
LIQUID COLLECTED						
TOTAL LIQUID COLLECTED (specify ml or g)						

ORSAT DATA	TIME	CO_2	O_2
TRIAL 1			
TRIAL 2			
TRIAL 3			
Average			

LEAK CHECK		
SYSTEM PRE:	0.000	CFM @ 15" Hg
POST:	0.000	CFM @ 15" Hg
PITOT PRE:		@ > 3" H_2O
POST:		@ > 3" H_2O

Form FDF 4008.00

IMPINGER RECOV Y DATA SHEET

ARI ENVIRONMENTAL INC.

Company: Monroe Energy
Location: Trainer PA
Source: Main Flare
Run No.: M4-9

Date Set-up: 8/2/16
Test Date: 8/2/16
Date Recovered: 8/2/16
USEPA Method: ALT008-M4
Corresponding Filter Wgt: NA
Filter Container No: NA

Measurement Method: Weight or Volume

Impinger No.	Impinger Contents	Initial wt/vol g/mL	Final wt/vol g/mL	Difference wt/vol g/mL	Sample Container No.
1	H_2O	121.9 g	121.7 g	-.2 g	
2	H_2O	115.9 g	116.1 g	.2 g	
3	Empty	93.3 g	93.4 g	.1 g	
4	Silica Gel	109.3 g	109.9 g	.6 g	
5					
6					
Net Gain				.9 g	

Field Balance Calibration Check: Reference Mass: _____ gram

Measured Mass: _____ gram

Absolute Difference: _____ gram (≤ 0.5 gram)

1426
1456

FIELD DATA

PLANT	Monroe	AMBIENT TEMPERATURE	81	PROBE HEATER SETTING	
DATE	8/2/16	BAROMETRIC PRESSURE	29.94	HEATER BOX SETTING	
LOCATION	Trainer PA	ASSUMED MOISTURE, %		METER $H_@$	
OPERATOR	SK SK	PROBE LENGTH, in		C_p FACTOR	
STACK NO	Main Flue	NOZZLE DIAMETER, in		Y_d FACTOR	995
RUN NO	M4-10	STACK DIAMETER, in		PITOT NO	
SAMPLE BOX NO	SK25	MINUTES PER POINT	5		
METER BOX NO	8005 74	NUMBER OF POINTS			
START TIME	1420	NUMBER OF PORTS			

WEIGHT OF PARTICULATE, mg		
Filter No		
Sample		
Final wt		
Tare wt		
Wt gain		
TOTAL		mg

CROSS SECTION

CLOCK TIME (Hrs)	TRAVERSE POINT NUMBER	SAMPLING TIME (θ) min.	STATIC PRESSURE (in. H_2O)	STACK TEMP (T_s) °F	VELOCITY HEAD (ΔP_s)	VELOCITY HEAD (ΔP_s)	PRESSURE DIFFERENTIAL ACROSS METER ORIFICE (ΔH) in. H_2O ACTUAL	PRESSURE DIFFERENTIAL ACROSS METER ORIFICE (ΔH) in. H_2O DESIRED	GAS SAMPLE VOLUME (Vm) ft³	GAS SAMPLE TEMP AT DRY GAS METER INLET (Tm_{in}) °F	GAS SAMPLE TEMP AT DRY GAS METER OUTLET (Tm_{out}) °F	FILTER EXIT GAS TEMP. °F	PROBE TEMP °F	AUXILIARY TEMP. °F	LAST IMPINGER OUTLET TEMP. °F	PUMP VACUUM (in. Hg)
1420	1	0	N/A	N/A	N/A	N/A	1.5		14.0990	76	77	N/A	N/A	N/A	68	
	2	5					1.5		14.1074	76	77				68	
	3	10					1.5		14.1128	76	77				68	
	4	15					1.5		14.1200	76	77				68	
	5	20					1.5		14.1272	76	77				67	
	6	25					1.5		14.1350	76	77				68	
1450		30							14.1420							
AVERAGE							1.5		0.0430 1.5174	76.5					68	

VOLUME OR WEIGHT OF LIQUID COLLECTED	IMPINGER VOLUME (ml) OR WEIGHT (g) #1	#2	#3	#4	#5	SILICA GEL WEIGHT g
FINAL						
INITIAL						
LIQUID COLLECTED						
TOTAL LIQUID COLLECTED (specify ml or g)						

ORSAT DATA	TIME	CO_2	O_2
TRIAL 1			
TRIAL 2			
TRIAL 3			
Average			

LEAK CHECK	
SYSTEM PRE:	0.000 CFM @ 15" Hg
POST:	0.000 CFM @ 15" Hg
PITOT PRE:	@ ≥ 3" H_2O
POST:	@ ≥ 3" H_2O

Form PDF 4000.02

IMPINGER RECOVERY DATA SHEET

ARI ENVIRONMENTAL INC.

Company: Monroe Energy
Location: Trainer PA
Source: Main Flare
Run No.: M4-10

Date Set-up: 8/2/16
Test Date: 8/2/16
Date Recovered: 8/2/16
USEPA Method: ALT005 - M4
Corresponding Filter Wgt: NA
Filter Container No: NA

Measurement Method: Weight or Volume

Impinger No.	Impinger Contents	Initial wt/vol g/mL	Final wt/vol g/mL	Difference wt/vol g/mL	Sample Container No.
1	H_2O	107.3 g	107.1 g	-.2 g	
2	H_2O	102.5 g	102.6 g	.1 g	
3	Empty	93.5 g	93.7 g	.2 g	
4	Silica Gel	106.0 g	106.4 g	.4 g	
5					
6					
Net Gain				0.5 g	

Field Balance Calibration Check: Reference Mass: _____ gram

Measured Mass: _____ gram

Absolute Difference: _____ gram (≤ 0.5 gram)

924

FIELD DATA

PLANT	Monroe	AMBIENT TEMPERATURE	75	PROBE HEATER SETTING	
DATE	8-5-16	BAROMETRIC PRESSURE	29.92	HEATER BOX SETTING	250
LOCATION	Trainer PA	ASSUMED MOISTURE, %		METER $H_@$	1.935
OPERATOR	JH	PROBE LENGTH, in		C_p FACTOR	
STACK NO	Main Stack	NOZZLE DIAMETER, in		Y_d FACTOR	.987 / .995
RUN NO	1	STACK DIAMETER, in		PITOT NO	
SAMPLE BOX NO	625	MINUTES PER POINT	5		
METER BOX NO	1400054	NUMBER OF POINTS			
START TIME	748	NUMBER OF PORTS			

WEIGHT OF PARTICULATE, mg		
Filter No		
Sample		
Final wt		
Tare wt		
Wt gain		
TOTAL		mg

CROSS SECTION

CLOCK TIME (Hrs)	TRAVERSE POINT NUMBER	SAMPLING TIME (θ) min.	STATIC PRESSURE (in. H_2O)	STACK TEMP (T_s) °F	VELOCITY HEAD (ΔP_s) IN	VELOCITY HEAD (ΔP_s) OUT	PRESSURE DIFFERENTIAL ACROSS METER ORIFICE (ΔH) in. H_2O ACTUAL	PRESSURE DIFFERENTIAL ACROSS METER ORIFICE (ΔH) in. H_2O DESIRED	GAS SAMPLE VOLUME (Vm) ft^3	GAS SAMPLE TEMP AT DRY GAS METER INLET (Tm_{in}) °F	GAS SAMPLE TEMP AT DRY GAS METER OUTLET (Tm_{out}) °F	FILTER EXIT GAS TEMP. °F	TO TEMP °F	AUXILIARY TEMP. °F	LAST IMPINGER OUTLET TEMP. °F	PUMP VACUUM (in. Hg)
748		0	N/A	N/A	71	72	14.1922	1.51pm	982.804	NA	74	246	1939	N/A	68	5
		5			71	71	14.1960		983.15		74	247	1940		67	5
		10			71	71	14.1966		983.42		75	248	1940		67	5
		15			71	71	14.2018		983.71		75	247	1941		66	5
		20			71	71	14.2042		984.03		75	246	1941		67	5
		25			72	72	14.2074		984.32		76	247	1940		68	5
848		30					14.2100		984.578							
AVERAGE						71.3	0.0175		1.774		74.8					

0.6286 ft³ 30.234 L

VOLUME OR WEIGHT OF LIQUID COLLECTED	IMPINGER VOLUME (ml) OR WEIGHT (g) #1	#2	#3	#4	#5	SILICA GEL WEIGHT g
FINAL						
INITIAL						
LIQUID COLLECTED						
TOTAL LIQUID COLLECTED (specify ml or g)						

17.0 L

ORSAT DATA	TIME	CO_2	O_2
TRIAL 1			
TRIAL 2			
TRIAL 3			
Average			

LEAK CHECK		
SYSTEM PRE:	0.000	CFM @ 15" Hg
POST:	0.000	CFM @ 15" Hg
PITOT PRE:		@ > 3" H_2O
POST:		@ > 3" H_2O

Form FDF 4003.00

1002

FIELD DATA

PLANT	Monroe	AMBIENT TEMPERATURE	75
DATE	8-5-16	BAROMETRIC PRESSURE	~~29.45~~ 29.92
LOCATION	Trainer, PA	ASSUMED MOISTURE, %	
OPERATOR	SH	PROBE LENGTH, in	
STACK NO	Main Flare	NOZZLE DIAMETER, in	
RUN NO	2	STACK DIAMETER, in	
SAMPLE BOX NO	SB25	MINUTES PER POINT	
METER BOX NO	40608	NUMBER OF POINTS	
START TIME	8:26	NUMBER OF PORTS	

PROBE HEATER SETTING	
HEATER BOX SETTING	350
METER H@	1.1935
C, FACTOR	
Y_d FACTOR	.9987
PITOT NO	

WEIGHT OF PARTICULATE, mg		
Filter No		
Sample		
Final wt		
Tare wt		
Wt gain		
TOTAL		mg

CROSS SECTION

CLOCK TIME (Hrs)	TRAVERSE POINT NUMBER	SAMPLING TIME (Θ) min.	STATIC PRESSURE (in. H_2O)	STACK TEMP (T_s) °F	VELOCITY HEAD (ΔP_s)	VELOCITY HEAD (ΔP_s)	PRESSURE DIFFERENTIAL ACROSS METER ORIFICE (ΔH) in. H_2O ACTUAL	PRESSURE DIFFERENTIAL ACROSS METER ORIFICE (ΔH) in. H_2O DESIRED	GAS SAMPLE VOLUME (Vm) ft^3	GAS SAMPLE TEMP AT DRY GAS METER INLET ($T_{m_{in}}$) °F	GAS SAMPLE TEMP AT DRY GAS METER OUTLET ($T_{m_{out}}$) °F	FILTER EXIT GAS TEMP. °F	TO ~~PROBE~~ TEMP °F	AUXILIARY TEMP. °F	LAST IMPINGER OUTLET TEMP. °F	PUMP VACUUM (in. Hg)
8:26		0	N/A	N/A	.72	.73	14.2106	1.5 lpm	984.590	N/A	77	246	1941	N/A	68	5
		5			.72	.73	14.3148		984.88		77	247	1940		68	5
		10			.72	.73	14.3170		985.17		77	247	1940		68	5
		15			.72	.73	14.3198		985.36		77	246	1940		68	5
		20			.73	.73	14.3242		985.77		78	247	1940		66	5
		25			.73	.73	14.2256		986.17		78	247	1940		67	5
8:56		30					14.2250		986.581							
AVERAGE						72.7	0.0174		1.791		77.3					

1.74L 50.715L

VOLUME OR WEIGHT OF LIQUID COLLECTED	IMPINGER VOLUME (ml) OR WEIGHT (g) #1	#2	#3	#4	#5	SILICA GEL WEIGHT
FINAL						
INITIAL						
LIQUID COLLECTED						
TOTAL LIQUID COLLECTED (specify ml or g)						

ORSAT DATA	TIME	CO_2	O_2
TRIAL 1			
TRIAL 2			
TRIAL 3			
Average			

LEAK CHECK	
SYSTEM PRE:	0.000 CFM@15" Hg
POST:	0.000 CFM@15" Hg
PITOT PRE:	@ > 3" H_2O
POST:	@ > 3" H_2O

Form FDF 4003.00