42-045-00070
PA 000 293 037

Monroe Energy

Monroe Energy, LLC
Trainer Refinery
4101 Post Road
Trainer, PA 19061
(610) 364-8000

December 20, 2016

U.S. EPA Region 3 (3AP20)
Office of Air Enforcement and Compliance
1650 Arch Street
Philadelphia, PA 19103

RECEIVED
DEC 22 2016
Air Protection Division

Re: Performance Specification Test Program
Monroe Energy, LLC
Boiler 14

To whom it may concern:

ARI Environmental was contracted by Monroe Energy, LLC to perform the relative accuracy test audit (RATA) portion of the test program required by 40 CFR, Part 60, Appendix B, Performance Specifications 2 (PS2) and 3 (PS3). All other performance specification tests required for certification were conducted by Monroe personnel. For your review, please find enclosed one (1) original copy of the performance testing report.

Should you have any questions or require additional information, please contact me at 610-364-8396.

Sincerely,

Stephen Brady
Air Compliance Lead
Monroe Energy, LLC

TEST REPORT

INITIAL PERFORMANCE SPECIFICATION RELATIVE ACCURACY TEST
BOILER NO. 14

MONROE ENERGY, LLC
TRAINER, PENNSYLVANIA

PREPARED FOR:

MONROE ENERGY, LLC
Trainer Refinery
4101 Post Road
Trainer, Pennsylvania 19061
Phone: 610.364.8396
E-mail: stephen.brady@monroe-energy.com
Attention: Mr. Stephen Brady
Air Compliance Lead

ARI Environmental, Inc., An Affiliate of
Montrose Environmental Group, Inc.
301 Harvey Drive, Units 9 & 10
Newport, Delaware 19804
Phone: 302.561.8445
Fax: 302.999.9309
E-mail: cwalker@montrose-env.com
Chad Walker
Senior Project Manager
Source Testing Division

Montrose Project No. PROJ106207
ARI Test Report No. 999-27
ARI Test Protocol No. 999-15
ARI Proposal No. 30615
Monroe Energy Purchase Order No. TPO9270
Test Date: November 2, 2016

REPORT CERTIFICATION

STATEMENT OF CONFORMANCE AND TEST REPORT CERTIFICATION

I certify, to the best of my knowledge, that this test program was conducted in a manner conforming to the criteria set forth in ASTM D7036-12: Standard Practice for Competence of Air Emission Testing Bodies, and that project management and supervision of all project related activities were performed by qualified individuals as defined by this practice.

I further certify that this test report and all attachments were prepared under my direction or supervision in accordance with the ARI Environmental, Inc. quality management system designed to ensure that qualified personnel gathered and evaluated the test information submitted. Based on my inquiry of the person or persons who performed the sampling and analysis relating to this performance test, the information submitted in this test report is, to the best of my knowledge and belief, true, accurate and complete.

Chad Walker, QSTI
Senior Project Manager, Source Testing Division
ARI Environmental, Inc.

Henry M. Taylor, QSTO
Quality Assurance Manager, Source Testing Division
ARI Environmental, Inc.

SOURCE OWNER/OPERATOR CERTIFICATION

I certify, to the best of my knowledge, that this test report has been checked for completeness, and that the results presented herein are accurate, error-free, legible and representative of the actual emissions measured during the testing.

Mr. Stephen Brady
Air Compliance Lead
Monroe Energy, LLC
(610) 364-8396

A bias adjustment factor (BAF) for the NO_x CEMS was calculated based on the results of the RA test. The bias test results are summarized below.

Source	NO_x CEMS BAF[1] (ppmv db)	NO_x CEMS BAF[1] (lb/MMBtu)
Boiler No. 14	1.051	1.052

[1]The BAF should be applied to all subsequent CEMS data by multiplying the measured CEMS NO_x concentration (ppmv db) or emission rate (lb/MMBtu) by the BAF as follows:

$$CEM_{iAdjusted} = CEM_{iMonitor} \times BAF$$

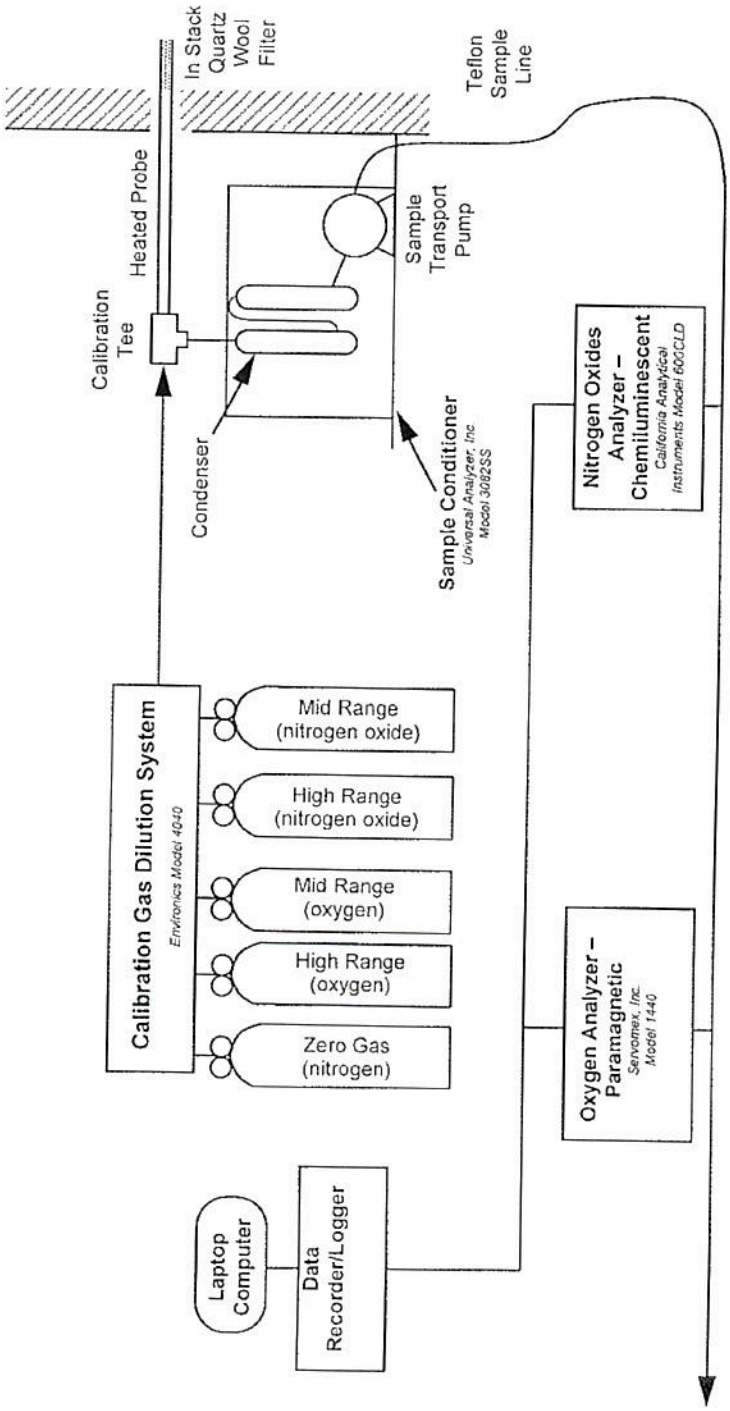

FIGURE 2-1. ARI REFERENCE METHOD O_2 AND NO_x SAMPLING SYSTEM

Emission rate calculation (lb/hr):

$$E_d = E \times H_T$$

Where:

E_d = Pollutant emission rate, lb/hr
E = Pollutant emission rate, lb/MMBtu
H_T = Heat input, MMBtu/hr

2.3 RA CALCULATIONS

The RA was calculated by directly comparing the RM results with the actual CEMS data, using the following equations:

1. Effluent gas concentration; calculated from pre-test and post-test calibration bias checks:

$$C_{gas} = \left[\overline{C} - C_o\right] \frac{C_{ma}}{C_m - C_o}$$

Where:

C_{gas} = Effluent gas concentration, dry basis, ppmv or %
$\overline{C}$ = Average gas concentration indicated by gas analyzer, dry basis, ppmv or %
C_o = Average of initial and final system calibration bias check responses for the zero gas, ppmv or %
C_m = Average of initial and final system calibration bias check responses for the upscale calibration gas, ppmv or %
C_{ma} = Actual concentration of the upscale calibration gas, ppmv or %

2. Arithmetic mean; calculated arithmetic mean of the difference between the RM results and the CEMS data:

$$\overline{d} = \frac{1}{n}\sum_{i=1}^{n} d_i$$

Where:

n = Number of data points
$\sum_{i=1}^{n} d_i$ = Algebraic sum of the individual differences, d_i

2.4 BIAS DETERMINATION

The bias test was performed for the NO_x CEMS based on the results of the RA test.

To calculate bias for the NO_x monitor, "d" is, for each paired data point, the difference between the RM NO_x value (ppmv db or lb/MMBtu) and the CEMS data (ppmv db or lb/MMBtu).

The standard deviation, S_d, of the data set was calculated from the RA test data. The confidence coefficient, |cc|, of the data set was also calculated from the RA test data.

If, for the RA test data set being tested, the mean difference, d, is less than or equal to the absolute value of the confidence coefficient, |cc|, the monitor or monitoring system has passed the bias test. If the mean difference, d, is greater than the absolute value of the confidence coefficient, |cc|, the monitor or monitoring system has failed to meet the bias test requirement.

2.4.1 Bias Adjustment

If the monitor fails to meet the bias test requirement, the value obtained from the monitor must be adjusted using the following equation:

1) $CEM_{iAdjusted} = CEM_{iMonitor} \times BAF$

Where:

$CEM_{iAdjusted}$ = Data value, adjusted for bias, at time i

$CEM_{iMonitor}$ = Data (measurement) provided by the monitor at time i

BAF = Bias adjustment factor, defined by:

2) $BAF = 1 + \frac{|\bar{d}|}{CEM_{avg}}$

Where:

BAF = Bias adjustment factor, calculated to the nearest thousandth

$|\bar{d}|$ = Arithmetic mean of the difference obtained during the failed bias test

CEM_{avg} = Mean of the data values provided by the monitor during failed bias test

The appropriate BAF was determined directly from the RA test results using Equation 2 above.

SECTIONFOUR

Results

The test results are presented in Tables 4-1 through 4-5.

The calculation summaries, field data, ARI reference method monitoring data, CEMS and performance tests data, calibration data and test program qualifications are included in the appendices.

TABLE 4-2. BOILER NO. 14 NO_x CEMS RA TEST RESULTS (ppmv db)

COMPANY : Monroe Energy, LLC
LOCATION : Trainer, PA
SOURCE : Boiler No. 14
TEST DATE : 11/2/16
LOAD LEVEL : ≥50% of Normal Operating Conditions

Run No.	Start Time	Stop Time	Reference Method Samples RM_i NO_x ppmv db	CEMS Output CEM_i NO_x ppmv db	(RM_i-CEM_i) Difference (d_i)
RA-1	07:23	07:44	1.84	1.80	0.04
RA-2	07:54	08:15	2.02	1.91	0.11
RA-3	08:24	08:45	1.95	1.85	0.10
RA-4	09:06	09:27	1.94	1.86	0.08
RA-5	09:37	09:58	1.97	1.86	0.11
RA-6	10:07	10:28	2.08	1.95	0.13
RA-7*	10:39	11:00	2.18	2.02	0.16
RA-8	11:10	11:31	1.98	1.86	0.12
RA-9	11:43	12:04	1.96	1.86	0.10
RA-10	12:15	12:36	1.97	1.89	0.08

*Data omitted from calculations.

Mean Reference Method Value:	1.97	ppmv db
Mean CEMS Value:	1.87	ppmv db
Average d:	0.10	ppmv db
n:	9	
$t_{0.975}$:	2.306	
Standard Deviation:	0.027	
Confidence Coefficient (One-Tailed):	0.021	

	Measured	Allowable
Relative Accuracy:	**5.91%**	**≤10% (Semi-Annual) or ≤7.5% (Annual), Based on the Mean RM Value**

TABLE 4-4. BOILER NO. 14 SUMMARY OF NO_x BIAS TEST RESULTS

	NO_x Concentration		NO_x Emission Rate	
RM Average Value	1.97	ppmv db	0.0030	lb/MMBtu
CEMS Average Value	1.87	ppmv db	0.0028	lb/MMBtu
Mean Difference (d)	0.10	ppmv db	0.0001	lb/MMBtu
Confidence Coefficient | cc |	0.021		0.00004	
Bias Pass $=\left(\bar{d}\right)\leq\lvert cc\rvert$	Fail		Fail	
Bias Adjustment Factor	1.051		1.052	
Time of Completion of RATA	12:36		12:36	
Test Date	11/2/16		11/2/16	

APPENDIX A

Calculation Summaries

RELATIVE ACCURACY CALCULATIONS

CLIENT: Monroe Energy
SOURCE: Boiler No. 14
DATE: 11/2/2016
POLLUTANT: NO_x - Concentration

RUNS USED FOR RELATIVE ACCURACY CALCULATIONS

Run No.	Start Time	Stop Time	ARI RM NO_x Conc. ppmv db	ME CEMS Conc. ppmv db	Difference ppmv db	Run Used (Y/N)
RA-1	07:23	07:44	1.84	1.80	0.04	Y
RA-2	07:54	08:15	2.02	1.91	0.11	Y
RA-3	08:24	08:45	1.95	1.85	0.10	Y
RA-4	09:06	09:27	1.94	1.86	0.08	Y
RA-5	09:37	09:58	1.97	1.86	0.11	Y
RA-6	10:07	10:28	2.08	1.95	0.13	Y
RA-7	10:39	11:00	2.18	2.02	0.16	N
RA-8	11:10	11:31	1.98	1.86	0.12	Y
RA-9	11:43	12:04	1.96	1.86	0.10	Y
RA-10	12:15	12:36	1.97	1.89	0.08	Y
		Mean:	1.97	1.87	0.10	
		Standard Deviation:			0.027	
				BAF:	1.051	
		RM Average:	1.97	Relative Accuracy:	5.91	
		t(0.975):	2.306			
		CC:	0.021			

	Measured	Allowable
% Reference Method:	5.91	7.5 (Annual)
		10.0 (Semi-Annual)

RELATIVE ACCURACY CALCULATIONS

CLIENT: Monroe Energy
SOURCE: Boiler No. 14
DATE: 11/2/2016
POLLUTANT: NO_x - Emission Rate

RUNS USED FOR RELATIVE ACCURACY CALCULATIONS

Run No.	Start Time	Stop Time	ARI RM NO_x lb/hr	ME CEMS lb/hr	Difference lb/hr	Run Used (Y/N)
RA-1	07:23	07:44	0.64	0.63	0.01	Y
RA-2	07:54	08:15	0.71	0.67	0.04	Y
RA-3	08:24	08:45	0.68	0.65	0.03	Y
RA-4	09:06	09:27	0.68	0.64	0.04	Y
RA-5	09:37	09:58	0.67	0.63	0.04	Y
RA-6	10:07	10:28	0.72	0.68	0.04	Y
RA-7	10:39	11:00	0.74	0.68	0.06	N
RA-8	11:10	11:31	0.65	0.61	0.04	Y
RA-9	11:43	12:04	0.65	0.61	0.04	Y
RA-10	12:15	12:36	0.66	0.63	0.03	Y
		Mean:	0.67	0.64	0.03	
		Standard Deviation:			0.009	
		RM Average:	0.67	Relative Accuracy:	5.97	
		t(0.975):	2.306			
		CC:	0.007			

	Measured	Allowable
% Reference Method:	5.97	20.0

ARI ENVIRONMENTAL, INC
REFERENCE METHOD ANALYZER DATA CORRECTION CALCULATIONS

MONITOR DATA SUMMARY

COMPANY: Monroe Energy
SOURCE: Boiler No. 14
REPETITION: RA-2
TEST DATE: 11/2/2016
START TIME: 7:54
END TIME: 8:15

GAS ANALYZER	O_2
SCALE :	0 - 21.95%
AVERAGE CAL. BIAS (C_m):	12.44
AVERAGE ZERO BIAS (C_o):	0.04
CALIBRATION GAS:	Diluted O_2 in N_2
CALIBRATION % (C_{ma}):	12.48
% CORRECTED (C_{gas}):	6.88

Clock Time	Elapsed Time	O_2	NO_x
7:54	0		
7:55	1	6.71	2.1
7:56	2	6.72	2.1
7:57	3	6.79	2.1
7:58	4	6.93	2.1
7:59	5	7.02	2.2
8:00	6	6.84	2.2
8:01	7	6.67	2.1
8:02	8	6.72	2.2
8:03	9	6.76	2.1
8:04	10	6.88	2.1
8:05	11	6.98	2.1
8:06	12	7.01	2.2
8:07	13	7.00	2.2
8:08	14	6.90	2.2
8:09	15	6.88	2.2
8:10	16	6.94	2.2
8:11	17	6.95	2.2
8:12	18	6.92	2.2
8:13	19	6.89	2.3
8:14	20	6.90	2.3
8:15	21	6.89	2.2
	$(\overline{C})$ AVG =	6.872	2.17

$$C_{gas} = (\overline{C} - C_o)\frac{C_{ma}}{C_m - C_o}$$

GAS ANALYZER	NO_x
SCALE :	0 - 25.4 ppm
AVERAGE CAL. BIAS (C_m):	12.48
AVERAGE ZERO BIAS (C_o):	0.20
CALIBRATION GAS:	Diluted NO_x in N_2
CALIBRATION PPM (C_{ma}):	12.57
PPM CORRECTED (C_{gas}):	2.02

ARI ENVIRONMENTAL, INC
REFERENCE METHOD ANALYZER DATA CORRECTION CALCULATIONS

MONITOR DATA SUMMARY

COMPANY: Monroe Energy
SOURCE: Boiler No. 14
REPETITION: RA-4
TEST DATE: 11/2/2016
START TIME: 9:06
END TIME: 9:27

GAS ANALYZER O_2

SCALE : 0 - 21.95%
AVERAGE CAL. BIAS (C_m): 12.43
AVERAGE ZERO BIAS (C_o): 0.04

CALIBRATION GAS: Diluted O_2 in N_2
CALIBRATION % (C_{ma}): 12.48
% CORRECTED (C_{gas}): 6.86

Clock Time	Elapsed Time	O_2	NO_x
9:06	0		
9:07	1	6.79	2.1
9:08	2	6.82	2.1
9:09	3	6.81	2.1
9:10	4	6.82	2.1
9:11	5	6.79	2.1
9:12	6	6.93	2.1
9:13	7	7.03	2.1
9:14	8	6.98	2.1
9:15	9	6.66	2.1
9:16	10	6.65	2.1
9:17	11	6.81	2.1
9:18	12	6.87	2.1
9:19	13	6.95	2.1
9:20	14	6.97	2.1
9:21	15	6.92	2.1
9:22	16	6.62	2.1
9:23	17	6.63	2.0
9:24	18	6.74	2.1
9:25	19	6.93	2.0
9:26	20	7.12	2.1
9:27	21	7.04	2.0
	$(\overline{C})$ AVG =	6.851	2.08

$$C_{gas} = (\overline{C} - C_o)\frac{C_{ma}}{C_m - C_o}$$

GAS ANALYZER NO_x

SCALE : 0 - 25.4 ppm
AVERAGE CAL. BIAS (C_m): 12.46
AVERAGE ZERO BIAS (C_o): 0.18

CALIBRATION GAS: Diluted NO_x in N_2
CALIBRATION PPM (C_{ma}): 12.57
PPM CORRECTED (C_{gas}): 1.94

ARI ENVIRONMENTAL, INC
REFERENCE METHOD ANALYZER DATA CORRECTION CALCULATIONS

MONITOR DATA SUMMARY

COMPANY: Monroe Energy
SOURCE: Boiler No. 14
REPETITION: RA-6
TEST DATE: 11/2/2016
START TIME: 10:07
END TIME: 10:28

Clock Time	Elapsed Time	O_2	NO_x
10:07	0		
10:08	1	6.89	2.1
10:09	2	6.99	2.1
10:10	3	7.01	2.2
10:11	4	7.06	2.2
10:12	5	7.18	2.2
10:13	6	7.19	2.2
10:14	7	7.08	2.2
10:15	8	7.05	2.2
10:16	9	7.13	2.2
10:17	10	7.26	2.2
10:18	11	7.24	2.2
10:19	12	7.10	2.3
10:20	13	6.89	2.1
10:21	14	6.87	2.3
10:22	15	7.14	2.3
10:23	16	7.22	2.2
10:24	17	7.10	2.1
10:25	18	6.81	2.1
10:26	19	6.83	2.1
10:27	20	7.00	2.2
10:28	21	7.15	2.2
	$(\bar{C})$ AVG =	7.056	2.18

GAS ANALYZER O_2

SCALE : 0 - 21.95%
AVERAGE CAL. BIAS (C_m): 12.42
AVERAGE ZERO BIAS (C_o): 0.04

CALIBRATION GAS: Diluted O_2 in N_2
CALIBRATION % (C_{ma}): 12.48
% CORRECTED (C_{gas}): 7.07

$$C_{gas} = (\bar{C} - C_o)\frac{C_{ma}}{C_m - C_o}$$

GAS ANALYZER NO_x

SCALE : 0 - 25.4 ppm
AVERAGE CAL. BIAS (C_m): 12.34
AVERAGE ZERO BIAS (C_o): 0.17

CALIBRATION GAS: Diluted NO_x in N_2
CALIBRATION PPM (C_{ma}): 12.57
PPM CORRECTED (C_{gas}): 2.08

ARI ENVIRONMENTAL, INC
REFERENCE METHOD ANALYZER DATA CORRECTION CALCULATIONS

MONITOR DATA SUMMARY

COMPANY: Monroe Energy
SOURCE: Boiler No. 14
REPETITION: RA-8
TEST DATE: 11/2/2016
START TIME: 11:10
END TIME: 11:31

GAS ANALYZER	O_2
SCALE :	0 - 21.95%
AVERAGE CAL. BIAS (C_m):	12.40
AVERAGE ZERO BIAS (C_o):	0.04
CALIBRATION GAS:	Diluted O_2 in N_2
CALIBRATION % (C_{ma}):	12.48
% CORRECTED (C_{gas}):	**6.72**

Clock Time	Elapsed Time	O_2	NO_x
11:10	0		
11:11	1	6.60	2.2
11:12	2	7.00	2.1
11:13	3	6.76	2.1
11:14	4	6.34	2.1
11:15	5	6.47	2.2
11:16	6	6.78	2.1
11:17	7	6.85	2.1
11:18	8	6.47	2.0
11:19	9	6.57	2.2
11:20	10	6.90	2.1
11:21	11	6.98	2.1
11:22	12	6.74	2.1
11:23	13	6.62	2.0
11:24	14	6.64	2.1
11:25	15	6.69	2.2
11:26	16	6.79	2.1
11:27	17	6.81	2.1
11:28	18	6.74	2.1
11:29	19	6.63	2.0
11:30	20	6.62	2.1
11:31	21	6.70	2.1
	$(\overline{C})$ AVG =	6.701	2.10

$$C_{gas} = (\overline{C} - C_o)\frac{C_{ma}}{C_m - C_o}$$

GAS ANALYZER	NO_x
SCALE :	0 - 25.4 ppm
AVERAGE CAL. BIAS (C_m):	12.26
AVERAGE ZERO BIAS (C_o):	0.20
CALIBRATION GAS:	Diluted NO_x in N_2
CALIBRATION PPM (C_{ma}):	12.57
PPM CORRECTED (C_{gas}):	**1.98**

ARI ENVIRONMENTAL, INC
REFERENCE METHOD ANALYZER DATA CORRECTION CALCULATIONS

MONITOR DATA SUMMARY

COMPANY:	Monroe Energy
SOURCE:	Boiler No. 14
REPETITION:	RA-10
TEST DATE:	11/2/2016
START TIME:	12:15
END TIME:	12:36

GAS ANALYZER	O_2
SCALE :	0 - 21.95%
AVERAGE CAL. BIAS (C_m):	12.39
AVERAGE ZERO BIAS (C_o):	0.04
CALIBRATION GAS:	Diluted O_2 in N_2
CALIBRATION % (C_{ma}):	12.48
% CORRECTED (C_{gas}):	6.98

Clock Time	Elapsed Time	O_2	NO_x
12:15	0		
12:16	1	7.09	2.2
12:17	2	7.10	2.1
12:18	3	6.87	2.1
12:19	4	6.87	2.1
12:20	5	6.94	2.1
12:21	6	6.92	2.1
12:22	7	6.92	2.1
12:23	8	6.98	2.1
12:24	9	6.97	2.2
12:25	10	6.93	2.2
12:26	11	6.93	2.1
12:27	12	6.95	2.1
12:28	13	6.95	2.1
12:29	14	6.83	2.1
12:30	15	6.85	2.1
12:31	16	7.04	2.1
12:32	17	7.12	2.0
12:33	18	7.02	2.0
12:34	19	6.86	2.0
12:35	20	6.90	2.0
12:36	21	6.89	2.1
	$(\overline{C})$ AVG =	6.950	2.09

$$C_{gas} = (\overline{C} - C_o)\frac{C_{ma}}{C_m - C_o}$$

GAS ANALYZER	NO_x
SCALE :	0 - 25.4 ppm
AVERAGE CAL. BIAS (C_m):	12.22
AVERAGE ZERO BIAS (C_o):	0.20
CALIBRATION GAS:	Diluted NO_x in N_2
CALIBRATION PPM (C_{ma}):	12.57
PPM CORRECTED (C_{gas}):	1.97

APPENDIX B

Field Data

APPENDIX C

ARI Reference Method Monitoring Data

Monroe Energy - Trainer, PA
Boiler No. 14 RA Test
ARI Reference Method Monitoring Data

Date/Time	O_2 % db	NO_x ppmv db	Comments
11/2/16 6:56:45	12.61	0.1	
11/2/16 6:57:00	13.93	2.8	
11/2/16 6:57:15	2.26	32.5	
11/2/16 6:57:30	0.03	29.5	
11/2/16 6:57:45	0.02	26.9	
11/2/16 6:58:00	0.01	26.5	
11/2/16 6:58:15	0.00	26.3	
11/2/16 6:58:30	0.00	26.2	
11/2/16 6:58:45	0.00	26.1	
11/2/16 6:59:00	0.00	26.1	
11/2/16 6:59:15	0.00	26.1	
11/2/16 6:59:30	0.00	26.1	
11/2/16 6:59:45	0.00	25.9	
11/2/16 7:00:00	0.00	25.9	
11/2/16 7:00:15	0.00	25.7	
11/2/16 7:00:30	0.00	25.3	Calibration Error
11/2/16 7:00:45	0.00	**25.3**	
11/2/16 7:01:00	0.00	**25.2**	
11/2/16 7:01:15	-0.01	**25.2**	**25.2 25.4 ppm NO_x**
11/2/16 7:01:30	0.02	**25.2**	
11/2/16 7:01:45	1.69	21.9	
11/2/16 7:02:00	3.10	48.4	
11/2/16 7:02:15	0.04	22.2	
11/2/16 7:02:30	0.03	27.8	
11/2/16 7:02:45	0.01	17.4	
11/2/16 7:03:00	0.00	15.0	
11/2/16 7:03:15	0.00	14.1	
11/2/16 7:03:30	0.00	13.6	
11/2/16 7:03:45	0.00	13.3	
11/2/16 7:04:00	0.00	13.1	
11/2/16 7:04:15	-0.01	13.0	
11/2/16 7:04:30	-0.01	13.0	
11/2/16 7:04:45	-0.01	12.8	
11/2/16 7:05:00	-0.01	12.8	
11/2/16 7:05:15	-0.01	12.8	
11/2/16 7:05:30	-0.01	12.7	Calibration Error
11/2/16 7:05:45	-0.01	**12.7**	
11/2/16 7:06:00	-0.01	**12.7**	
11/2/16 7:06:15	-0.01	**12.7**	**12.7 12.57 ppm NO_x**
11/2/16 7:06:30	-0.01	**12.6**	
11/2/16 7:06:45	-0.01	12.6	
11/2/16 7:07:00	-0.01	12.6	
11/2/16 7:07:15	0.07	12.5	
11/2/16 7:07:30	1.92	17.4	
11/2/16 7:07:45	0.15	39.9	
11/2/16 7:08:00	0.09	40.1	
11/2/16 7:08:15	0.09	40.7	
11/2/16 7:08:30	0.09	42.4	
11/2/16 7:08:45	0.09	43.1	
11/2/16 7:09:00	0.09	43.3	

Monroe Energy - Trainer, PA
Boiler No. 14 RA Test
ARI Reference Method Monitoring Data

Date/Time	O_2 % db	NO_x ppmv db	Comments
11/2/16 7:22:00	7.03	2.1	
11/2/16 7:22:15	6.99	2.1	
11/2/16 7:22:30	7.00	2.1	
11/2/16 7:22:45	7.01	2.1	Begin Run No. 1
11/2/16 7:23:00	6.95	2.1	Point #2
11/2/16 7:23:15	6.99	2.1	
11/2/16 7:23:30	6.98	2.1	
11/2/16 7:23:45	7.02	2.1	
11/2/16 7:24:00	6.98	2.1	
11/2/16 7:24:15	6.94	2.0	
11/2/16 7:24:30	6.97	2.0	
11/2/16 7:24:45	6.94	2.0	
11/2/16 7:25:00	6.98	2.0	
11/2/16 7:25:15	6.98	2.0	
11/2/16 7:25:30	6.96	2.0	
11/2/16 7:25:45	7.00	2.1	
11/2/16 7:26:00	6.99	2.0	
11/2/16 7:26:15	6.98	2.1	
11/2/16 7:26:30	7.01	2.1	
11/2/16 7:26:45	6.98	2.1	
11/2/16 7:27:00	7.01	2.1	
11/2/16 7:27:15	7.00	2.1	
11/2/16 7:27:30	7.05	2.1	
11/2/16 7:27:45	7.01	2.1	
11/2/16 7:28:00	7.03	2.1	
11/2/16 7:28:15	7.02	2.1	
11/2/16 7:28:30	7.05	2.1	
11/2/16 7:28:45	7.07	2.0	
11/2/16 7:29:00	7.03	2.1	
11/2/16 7:29:15	7.06	2.1	
11/2/16 7:29:30	7.04	2.1	
11/2/16 7:29:45	7.06	2.2	
11/2/16 7:30:00	6.99	2.3	Point #3
11/2/16 7:30:15	7.01	2.2	
11/2/16 7:30:30	6.97	2.2	
11/2/16 7:30:45	6.96	2.1	
11/2/16 7:31:00	6.98	2.1	
11/2/16 7:31:15	6.87	2.0	
11/2/16 7:31:30	6.86	1.9	
11/2/16 7:31:45	6.82	2.0	
11/2/16 7:32:00	6.81	2.0	
11/2/16 7:32:15	6.81	2.0	
11/2/16 7:32:30	6.79	2.0	
11/2/16 7:32:45	6.85	2.0	
11/2/16 7:33:00	6.82	2.1	
11/2/16 7:33:15	6.88	2.1	
11/2/16 7:33:30	6.91	2.1	
11/2/16 7:33:45	6.92	2.1	
11/2/16 7:34:00	6.98	2.1	
11/2/16 7:34:15	6.96	2.1	
11/2/16 7:34:30	7.05	2.0	

Monroe Energy - Trainer, PA
Boiler No. 14 RA Test
ARI Reference Method Monitoring Data

Date/Time	O_2 % db	NO_x ppmv db	Comments
11/2/16 7:47:30	6.63	9.6	
11/2/16 7:47:45	0.19	10.1	
11/2/16 7:48:00	0.09	10.8	
11/2/16 7:48:15	0.07	12.6	
11/2/16 7:48:30	0.06	12.6	
11/2/16 7:48:45	0.05	12.5	System Bias
11/2/16 7:49:00	0.05	12.5	
11/2/16 7:49:15	0.05	12.5	0.05 Zero O_2
11/2/16 7:49:30	0.04	12.5	12.5 12.57 ppm NO_x
11/2/16 7:49:45	0.04	12.5	
11/2/16 7:50:00	0.04	12.5	
11/2/16 7:50:15	0.04	12.3	
11/2/16 7:50:30	4.45	4.7	
11/2/16 7:50:45	6.89	2.1	
11/2/16 7:51:00	6.87	2.1	
11/2/16 7:51:15	6.83	2.1	
11/2/16 7:51:30	6.83	2.1	
11/2/16 7:51:45	6.85	2.1	
11/2/16 7:52:00	6.85	2.1	
11/2/16 7:52:15	6.80	2.1	
11/2/16 7:52:30	6.82	2.2	
11/2/16 7:52:45	6.74	2.2	
11/2/16 7:53:00	6.76	2.1	
11/2/16 7:53:15	6.75	2.1	
11/2/16 7:53:30	6.73	2.1	
11/2/16 7:53:45	6.74	2.1	Begin Run No. 2
11/2/16 7:54:00	6.75	2.1	Point #1
11/2/16 7:54:15	6.72	2.1	
11/2/16 7:54:30	6.70	2.1	
11/2/16 7:54:45	6.69	2.1	
11/2/16 7:55:00	6.69	2.1	
11/2/16 7:55:15	6.72	2.2	
11/2/16 7:55:30	6.73	2.2	
11/2/16 7:55:45	6.75	2.1	
11/2/16 7:56:00	6.74	2.1	
11/2/16 7:56:15	6.76	2.2	
11/2/16 7:56:30	6.81	2.1	
11/2/16 7:56:45	6.83	2.1	
11/2/16 7:57:00	6.86	2.1	
11/2/16 7:57:15	6.91	2.1	
11/2/16 7:57:30	6.96	2.1	
11/2/16 7:57:45	7.01	2.1	
11/2/16 7:58:00	7.02	2.1	
11/2/16 7:58:15	7.03	2.1	
11/2/16 7:58:30	7.02	2.2	
11/2/16 7:58:45	7.03	2.2	
11/2/16 7:59:00	6.97	2.2	
11/2/16 7:59:15	6.89	2.1	
11/2/16 7:59:30	6.79	2.2	
11/2/16 7:59:45	6.72	2.2	
11/2/16 8:00:00	6.67	2.0	

Monroe Energy - Trainer, PA
Boiler No. 14 RA Test
ARI Reference Method Monitoring Data

Date/Time	O_2 % db	NO_x ppmv db	Comments
11/2/16 8:13:00	6.91	2.3	
11/2/16 8:13:15	6.92	2.3	
11/2/16 8:13:30	6.87	2.2	
11/2/16 8:13:45	6.91	2.3	
11/2/16 8:14:00	6.89	2.2	
11/2/16 8:14:15	6.91	2.2	
11/2/16 8:14:30	6.85	2.2	
11/2/16 8:14:45	6.89	2.2	
11/2/16 8:15:00	6.83	2.2	End Run No. 2
11/2/16 8:15:15	5.39	4.9	
11/2/16 8:15:30	10.97	1.4	
11/2/16 8:15:45	12.39	0.3	
11/2/16 8:16:00	12.41	0.2	
11/2/16 8:16:15	12.42	0.2	System Bias
11/2/16 8:16:30	12.43	0.2	
11/2/16 8:16:45	12.43	0.2	12.43 12.48% O_2
11/2/16 8:17:00	12.43	0.2	0.2 Zero NOx
11/2/16 8:17:15	12.43	0.2	
11/2/16 8:17:30	12.44	0.2	
11/2/16 8:17:45	12.35	0.4	
11/2/16 8:18:00	8.50	2.1	
11/2/16 8:18:15	3.71	11.4	
11/2/16 8:18:30	0.12	9.7	
11/2/16 8:18:45	0.08	11.7	
11/2/16 8:19:00	0.06	12.6	
11/2/16 8:19:15	0.05	12.5	System Bias
11/2/16 8:19:30	0.05	12.5	
11/2/16 8:19:45	0.04	12.5	0.04 Zero O_2
11/2/16 8:20:00	0.04	12.5	12.5 12.57 ppm NO_x
11/2/16 8:20:15	0.04	12.4	
11/2/16 8:20:30	0.04	12.4	
11/2/16 8:20:45	2.50	7.6	
11/2/16 8:21:00	6.82	2.2	
11/2/16 8:21:15	6.87	2.1	
11/2/16 8:21:30	6.89	2.1	
11/2/16 8:21:45	6.91	2.1	
11/2/16 8:22:00	6.85	2.1	
11/2/16 8:22:15	6.82	2.1	
11/2/16 8:22:30	6.86	2.1	
11/2/16 8:22:45	6.80	2.1	
11/2/16 8:23:00	6.78	2.1	
11/2/16 8:23:15	6.71	2.1	
11/2/16 8:23:30	6.61	2.1	
11/2/16 8:23:45	6.58	2.1	Begin Run No. 3
11/2/16 8:24:00	6.54	2.2	Point #3
11/2/16 8:24:15	6.58	2.1	
11/2/16 8:24:30	6.56	2.1	
11/2/16 8:24:45	6.59	2.1	
11/2/16 8:25:00	6.59	2.1	
11/2/16 8:25:15	6.66	2.1	
11/2/16 8:25:30	6.68	2.2	

Monroe Energy - Trainer, PA
Boiler No. 14 RA Test
ARI Reference Method Monitoring Data

Date/Time	O_2 % db	NO_x ppmv db	Comments
11/2/16 8:38:30	6.73	2.1	
11/2/16 8:38:45	6.76	2.1	
11/2/16 8:39:00	6.80	2.1	
11/2/16 8:39:15	6.88	2.1	
11/2/16 8:39:30	6.84	2.1	
11/2/16 8:39:45	6.88	2.1	
11/2/16 8:40:00	6.86	2.2	
11/2/16 8:40:15	6.91	2.1	
11/2/16 8:40:30	6.88	2.1	
11/2/16 8:40:45	6.92	2.1	
11/2/16 8:41:00	6.89	2.1	
11/2/16 8:41:15	6.90	2.1	
11/2/16 8:41:30	6.94	2.1	
11/2/16 8:41:45	6.87	2.1	
11/2/16 8:42:00	6.92	2.1	
11/2/16 8:42:15	6.91	2.1	
11/2/16 8:42:30	6.92	2.1	
11/2/16 8:42:45	6.94	2.1	
11/2/16 8:43:00	6.93	2.1	
11/2/16 8:43:15	6.94	2.1	
11/2/16 8:43:30	6.93	2.1	
11/2/16 8:43:45	6.93	2.0	
11/2/16 8:44:00	6.95	2.1	
11/2/16 8:44:15	6.89	2.0	
11/2/16 8:44:30	6.96	2.0	
11/2/16 8:44:45	6.93	2.0	
11/2/16 8:45:00	6.95	2.0	End Run No. 3
11/2/16 8:45:15	6.94	2.0	
11/2/16 8:45:30	6.89	2.3	
11/2/16 8:45:45	7.01	4.5	
11/2/16 8:46:00	12.31	0.4	
11/2/16 8:46:15	12.40	0.3	
11/2/16 8:46:30	12.41	0.2	System Bias
11/2/16 8:46:45	12.42	0.2	
11/2/16 8:47:00	12.43	0.2	12.43 12.48% O_2
11/2/16 8:47:15	12.43	0.2	0.2 Zero NOx
11/2/16 8:47:30	12.43	0.2	
11/2/16 8:47:45	12.44	0.2	
11/2/16 8:48:00	12.44	0.2	
11/2/16 8:48:15	12.29	0.4	
11/2/16 8:48:30	8.01	1.7	
11/2/16 8:48:45	5.09	9.9	
11/2/16 8:49:00	0.13	9.8	
11/2/16 8:49:15	0.08	11.6	System Bias
11/2/16 8:49:30	0.06	12.5	
11/2/16 8:49:45	0.05	12.5	0.05 Zero O_2
11/2/16 8:50:00	0.05	12.5	12.5 12.57 ppm NO_x
11/2/16 8:50:15	0.04	12.5	
11/2/16 8:50:30	0.04	12.5	
11/2/16 8:50:45	0.04	12.4	
11/2/16 8:51:00	0.04	12.4	

Monroe Energy - Trainer, PA
Boiler No. 14 RA Test
ARI Reference Method Monitoring Data

Date/Time	O_2 % db	NO_x ppmv db	Comments
11/2/16 9:04:00	7.03	2.1	
11/2/16 9:04:15	7.04	2.1	
11/2/16 9:04:30	7.06	2.1	
11/2/16 9:04:45	7.05	2.3	
11/2/16 9:05:00	7.11	2.3	
11/2/16 9:05:15	7.06	2.1	
11/2/16 9:05:30		2.1	
11/2/16 9:05:45	6.94	2.1	Begin Run No. 4
11/2/16 9:06:00	6.81	2.1	Point #1
11/2/16 9:06:15	6.78	2.1	
11/2/16 9:06:30	6.74	2.1	
11/2/16 9:06:45	6.81	2.1	
11/2/16 9:07:00	6.81	2.1	
11/2/16 9:07:15	6.80	2.1	
11/2/16 9:07:30	6.79	2.1	
11/2/16 9:07:45	6.87	2.1	
11/2/16 9:08:00	6.83	2.1	
11/2/16 9:08:15	6.81	2.1	
11/2/16 9:08:30	6.82	2.1	
11/2/16 9:08:45	6.78	2.1	
11/2/16 9:09:00	6.85	2.1	
11/2/16 9:09:15	6.78	2.1	
11/2/16 9:09:30	6.81	2.1	
11/2/16 9:09:45	6.83	2.1	
11/2/16 9:10:00	6.77	2.1	
11/2/16 9:10:15	6.81	2.0	
11/2/16 9:10:30	6.76	2.1	
11/2/16 9:10:45	6.83	2.0	
11/2/16 9:11:00	6.86	2.1	
11/2/16 9:11:15	6.95	2.1	
11/2/16 9:11:30	6.94	2.1	
11/2/16 9:11:45	6.98	2.0	
11/2/16 9:12:00	7.06	2.1	
11/2/16 9:12:15	7.02	2.1	
11/2/16 9:12:30	7.02	2.1	
11/2/16 9:12:45	7.02	2.1	
11/2/16 9:13:00	7.04	2.1	Point #2
11/2/16 9:13:15	7.03	2.1	
11/2/16 9:13:30	6.98	2.1	
11/2/16 9:13:45	6.87	2.1	
11/2/16 9:14:00	6.75	2.1	
11/2/16 9:14:15	6.69	2.1	
11/2/16 9:14:30	6.61	2.0	
11/2/16 9:14:45	6.60	2.0	
11/2/16 9:15:00	6.58	2.1	
11/2/16 9:15:15	6.66	2.1	
11/2/16 9:15:30	6.65	2.1	
11/2/16 9:15:45	6.71	2.1	
11/2/16 9:16:00	6.75	2.2	
11/2/16 9:16:15	6.80	2.1	
11/2/16 9:16:30	6.81	2.1	

Monroe Energy - Trainer, PA
Boiler No. 14 RA Test
ARI Reference Method Monitoring Data

Date/Time	O_2 % db	NO_x ppmv db	Comments
11/2/16 9:29:30	12.43	0.1	0.2 Zero NOx
11/2/16 9:29:45	12.43	0.1	
11/2/16 9:30:00	12.44	0.1	
11/2/16 9:30:15	12.44	0.2	
11/2/16 9:30:30	9.37	1.4	
11/2/16 9:30:45	8.44	4.7	
11/2/16 9:31:00	0.57	10.8	
11/2/16 9:31:15	0.09	9.4	
11/2/16 9:31:30	0.07	12.3	
11/2/16 9:31:45	0.05	12.5	
11/2/16 9:32:00	0.04	12.5	System Bias
11/2/16 9:32:15	0.05	12.5	
11/2/16 9:32:30	0.04	12.4	0.04 Zero O_2
11/2/16 9:32:45	0.03	12.4	12.4 12.57 ppm NO_x
11/2/16 9:33:00	0.03	12.4	
11/2/16 9:33:15	0.03	12.4	
11/2/16 9:33:30	0.14	11.3	
11/2/16 9:33:45	6.18	3.0	
11/2/16 9:34:00	7.04	2.1	
11/2/16 9:34:15	7.06	2.0	
11/2/16 9:34:30	7.09	2.0	
11/2/16 9:34:45	7.13	2.0	
11/2/16 9:35:00	7.08	2.0	
11/2/16 9:35:15	7.01	2.0	
11/2/16 9:35:30	6.85	2.0	
11/2/16 9:35:45	6.73	2.0	
11/2/16 9:36:00	6.71	2.1	
11/2/16 9:36:15	6.65	2.1	
11/2/16 9:36:30	6.69	2.0	
11/2/16 9:36:45	6.59	2.0	Begin Run No. 5
11/2/16 9:37:00	6.65	2.0	Point #3
11/2/16 9:37:15	6.64	2.0	
11/2/16 9:37:30	6.69	2.0	
11/2/16 9:37:45	6.78	2.0	
11/2/16 9:38:00	6.82	2.0	
11/2/16 9:38:15	6.96	2.0	
11/2/16 9:38:30	7.01	2.0	
11/2/16 9:38:45	7.14	2.0	
11/2/16 9:39:00	7.13	2.0	
11/2/16 9:39:15	7.16	2.0	
11/2/16 9:39:30	7.18	2.0	
11/2/16 9:39:45	7.15	2.0	
11/2/16 9:40:00	7.19	2.1	
11/2/16 9:40:15	7.16	2.1	
11/2/16 9:40:30	7.21	2.0	
11/2/16 9:40:45	7.11	2.0	
11/2/16 9:41:00	7.00	2.0	
11/2/16 9:41:15	6.88	2.0	
11/2/16 9:41:30	6.72	2.0	
11/2/16 9:41:45	6.58	2.0	
11/2/16 9:42:00	6.53	2.2	

Monroe Energy - Trainer, PA
Boiler No. 14 RA Test
ARI Reference Method Monitoring Data

Date/Time	O_2 % db	NO_x ppmv db	Comments
11/2/16 9:55:00	7.06	2.2	
11/2/16 9:55:15	7.02	2.2	
11/2/16 9:55:30	7.01	2.1	
11/2/16 9:55:45	7.03	2.1	
11/2/16 9:56:00	6.94	2.1	
11/2/16 9:56:15	6.90	2.2	
11/2/16 9:56:30	6.86	2.1	
11/2/16 9:56:45	6.83	2.1	
11/2/16 9:57:00	6.86	2.1	
11/2/16 9:57:15	6.93	2.1	
11/2/16 9:57:30	6.91	2.1	
11/2/16 9:57:45	6.87	2.0	
11/2/16 9:58:00	6.85	2.0	End Run No. 5
11/2/16 9:58:15	6.87	2.0	
11/2/16 9:58:30	6.02	4.2	
11/2/16 9:58:45	10.08	2.4	
11/2/16 9:59:00	12.38	0.4	
11/2/16 9:59:15	12.40	0.3	System Bias
11/2/16 9:59:30	12.41	0.2	
11/2/16 9:59:45	12.42	0.2	12.42 12.48% O_2
11/2/16 10:00:00	12.42	0.2	0.2 Zero NOx
11/2/16 10:00:15	12.42	0.1	
11/2/16 10:00:30	12.42	0.1	
11/2/16 10:00:45	12.43	0.1	
11/2/16 10:01:00	10.13	1.2	
11/2/16 10:01:15	7.18	2.0	
11/2/16 10:01:30	6.79	7.3	
11/2/16 10:01:45	0.18	10.2	
11/2/16 10:02:00	0.07	10.8	
11/2/16 10:02:15	0.06	12.3	System Bias
11/2/16 10:02:30	0.05	12.4	
11/2/16 10:02:45	0.04	12.4	0.04 Zero O_2
11/2/16 10:03:00	0.04	12.4	12.4 12.57 ppm NO_x
11/2/16 10:03:15	0.04	12.4	
11/2/16 10:03:30	0.03	12.3	
11/2/16 10:03:45	0.03	12.3	
11/2/16 10:04:00	0.88	10.2	
11/2/16 10:04:15	5.63	3.7	
11/2/16 10:04:30	6.81	2.2	
11/2/16 10:04:45	6.95	2.1	
11/2/16 10:05:00	6.91	2.1	
11/2/16 10:05:15	6.94	2.1	
11/2/16 10:05:30	6.92	2.1	
11/2/16 10:05:45	6.97	2.1	
11/2/16 10:06:00	6.84	2.1	
11/2/16 10:06:15	6.89	2.1	
11/2/16 10:06:30	6.82	2.2	
11/2/16 10:06:45	6.83	2.2	Begin Run No. 6
11/2/16 10:07:00	6.83	2.2	Point #1
11/2/16 10:07:15	6.91	2.1	

Monroe Energy - Trainer, PA
Boiler No. 14 RA Test
ARI Reference Method Monitoring Data

Date/Time	O_2 % db	NO_x ppmv db	Comments
11/2/16 10:20:15	6.89	2.2	
11/2/16 10:20:30	6.86	2.3	
11/2/16 10:20:45	6.98	2.3	
11/2/16 10:21:00	7.02	2.4	Point #3
11/2/16 10:21:15	7.14	2.4	
11/2/16 10:21:30	7.22	2.2	
11/2/16 10:21:45	7.19	2.2	
11/2/16 10:22:00	7.22	2.2	
11/2/16 10:22:15	7.26	2.2	
11/2/16 10:22:30	7.23	2.2	
11/2/16 10:22:45	7.18	2.2	
11/2/16 10:23:00	7.21	2.1	
11/2/16 10:23:15	7.12	2.1	
11/2/16 10:23:30	7.11	2.1	
11/2/16 10:23:45	6.96	2.2	
11/2/16 10:24:00	6.86	2.2	
11/2/16 10:24:15	6.82	2.2	
11/2/16 10:24:30	6.76	2.1	
11/2/16 10:24:45	6.80	2.1	
11/2/16 10:25:00	6.78	2.1	
11/2/16 10:25:15	6.86	2.1	
11/2/16 10:25:30	6.81	2.1	
11/2/16 10:25:45	6.87	2.1	
11/2/16 10:26:00	6.89	2.1	
11/2/16 10:26:15	7.02	2.1	
11/2/16 10:26:30	7.02	2.3	
11/2/16 10:26:45	7.08	2.1	
11/2/16 10:27:00	7.14	2.1	
11/2/16 10:27:15	7.15	2.1	
11/2/16 10:27:30	7.14	2.1	
11/2/16 10:27:45	7.16	2.2	
11/2/16 10:28:00	7.12	2.2	End Run No. 6
11/2/16 10:28:15	5.83	5.2	
11/2/16 10:28:30	5.17	4.8	
11/2/16 10:28:45	7.05	2.3	
11/2/16 10:29:00	6.88	2.2	
11/2/16 10:29:15	6.74	2.2	
11/2/16 10:29:30	6.64	2.2	
11/2/16 10:29:45	7.29	1.8	
11/2/16 10:30:00	12.04	0.3	
11/2/16 10:30:15	12.39	0.2	
11/2/16 10:30:30	12.40	0.1	
11/2/16 10:30:45	12.41	0.1	
11/2/16 10:31:00	12.42	0.1	System Bias
11/2/16 10:31:15	12.42	0.1	
11/2/16 10:31:30	12.41	0.1	12.42 12.48% O_2
11/2/16 10:31:45	12.42	0.1	0.1 Zero NOx
11/2/16 10:32:00	12.42	0.1	
11/2/16 10:32:15	12.42	0.1	
11/2/16 10:32:30	12.42	0.2	
11/2/16 10:32:45	9.93	0.9	

Monroe Energy - Trainer, PA
Boiler No. 14 RA Test
ARI Reference Method Monitoring Data

Date/Time	O_2 % db	NO_x ppmv db	Comments
11/2/16 10:45:45	6.95	2.2	
11/2/16 10:46:00	6.89	2.2	Point #2
11/2/16 10:46:15	6.97	2.2	
11/2/16 10:46:30	6.93	2.2	
11/2/16 10:46:45	6.97	2.2	
11/2/16 10:47:00	6.98	2.2	
11/2/16 10:47:15	6.99	2.2	
11/2/16 10:47:30	6.99	2.2	
11/2/16 10:47:45	6.97	2.3	
11/2/16 10:48:00	6.96	2.3	
11/2/16 10:48:15	6.94	2.3	
11/2/16 10:48:30	6.92	2.3	
11/2/16 10:48:45	6.88	2.3	
11/2/16 10:49:00	6.89	2.4	
11/2/16 10:49:15	6.82	2.3	
11/2/16 10:49:30	6.82	2.3	
11/2/16 10:49:45	6.76	2.3	
11/2/16 10:50:00	6.72	2.4	
11/2/16 10:50:15	6.71	2.4	
11/2/16 10:50:30	6.71	2.3	
11/2/16 10:50:45	6.69	2.2	
11/2/16 10:51:00	6.68	2.2	
11/2/16 10:51:15	6.66	2.3	
11/2/16 10:51:30	6.66	2.3	
11/2/16 10:51:45	6.63	2.3	
11/2/16 10:52:00	6.61	2.3	
11/2/16 10:52:15	6.62	2.3	
11/2/16 10:52:30	6.66	2.2	
11/2/16 10:52:45	6.59	2.2	
11/2/16 10:53:00	6.58	2.2	Point #1
11/2/16 10:53:15	6.66	2.2	
11/2/16 10:53:30	6.67	2.6	
11/2/16 10:53:45	6.71	2.5	
11/2/16 10:54:00	6.67	2.4	
11/2/16 10:54:15	6.68	2.4	
11/2/16 10:54:30	6.73	2.3	
11/2/16 10:54:45	6.80	2.2	
11/2/16 10:55:00	6.89	2.2	
11/2/16 10:55:15	6.98	2.2	
11/2/16 10:55:30	7.03	2.3	
11/2/16 10:55:45	7.10	2.3	
11/2/16 10:56:00	7.11	2.2	
11/2/16 10:56:15	7.14	2.2	
11/2/16 10:56:30	7.13	2.3	
11/2/16 10:56:45	7.10	2.3	
11/2/16 10:57:00	7.01	2.2	
11/2/16 10:57:15	6.86	2.2	
11/2/16 10:57:30	6.74	2.3	
11/2/16 10:57:45	6.67	2.2	
11/2/16 10:58:00	6.67	2.2	
11/2/16 10:58:15	6.66	2.2	

Monroe Energy - Trainer, PA
Boiler No. 14 RA Test
ARI Reference Method Monitoring Data

Date/Time	O_2 % db	NO_x ppmv db	Comments
11/2/16 11:11:15	6.98	2.1	
11/2/16 11:11:30	7.05	2.1	
11/2/16 11:11:45	7.04	2.1	
11/2/16 11:12:00	7.07	2.1	
11/2/16 11:12:15	6.89	2.1	
11/2/16 11:12:30	6.65	2.1	
11/2/16 11:12:45	6.44	2.1	
11/2/16 11:13:00	6.32	2.2	
11/2/16 11:13:15	6.31	2.1	
11/2/16 11:13:30	6.32	2.1	
11/2/16 11:13:45	6.39	2.1	
11/2/16 11:14:00	6.38	2.1	
11/2/16 11:14:15	6.45	2.2	
11/2/16 11:14:30	6.46	2.2	
11/2/16 11:14:45	6.57	2.2	
11/2/16 11:15:00	6.66	2.1	
11/2/16 11:15:15	6.75	2.1	
11/2/16 11:15:30	6.85	2.1	
11/2/16 11:15:45	6.87	2.1	
11/2/16 11:16:00	6.88	2.1	
11/2/16 11:16:15	6.91	2.1	
11/2/16 11:16:30	6.83	2.1	
11/2/16 11:16:45	6.77	2.1	
11/2/16 11:17:00	6.54	2.1	Point #2
11/2/16 11:17:15	6.50	2.0	
11/2/16 11:17:30	6.40	2.0	
11/2/16 11:17:45	6.44	2.0	
11/2/16 11:18:00	6.46	2.2	
11/2/16 11:18:15	6.56	2.2	
11/2/16 11:18:30	6.60	2.2	
11/2/16 11:18:45	6.68	2.1	
11/2/16 11:19:00	6.78	2.1	
11/2/16 11:19:15	6.90	2.0	
11/2/16 11:19:30	6.95	2.1	
11/2/16 11:19:45	6.98	2.1	
11/2/16 11:20:00	7.04	2.2	
11/2/16 11:20:15	7.01	2.1	
11/2/16 11:20:30	7.02	2.1	
11/2/16 11:20:45	6.86	2.1	
11/2/16 11:21:00	6.81	2.1	
11/2/16 11:21:15	6.75	2.1	
11/2/16 11:21:30	6.72	2.1	
11/2/16 11:21:45	6.70	2.1	
11/2/16 11:22:00	6.67	2.1	
11/2/16 11:22:15	6.62	2.0	
11/2/16 11:22:30	6.61	2.0	
11/2/16 11:22:45	6.58	2.0	
11/2/16 11:23:00	6.60	2.1	
11/2/16 11:23:15	6.65	2.1	
11/2/16 11:23:30	6.64	2.1	
11/2/16 11:23:45	6.66	2.1	

Monroe Energy - Trainer, PA
Boiler No. 14 RA Test
ARI Reference Method Monitoring Data

Date/Time	O_2 % db	NO_x ppmv db	Comments
11/2/16 11:36:45	0.02	12.3	
11/2/16 11:37:00	0.02	12.3	
11/2/16 11:37:15	0.02	12.3	
11/2/16 11:37:30	0.02	12.3	
11/2/16 11:37:45	0.02	12.3	
11/2/16 11:38:00	0.02	12.2	
11/2/16 11:38:15	0.02	12.2	
11/2/16 11:38:30	0.02	12.3	
11/2/16 11:38:45	0.01	12.3	
11/2/16 11:39:00	0.01	12.3	
11/2/16 11:39:15	0.01	12.3	
11/2/16 11:39:30	0.02	12.3	
11/2/16 11:39:45	0.02	12.3	
11/2/16 11:40:00	3.48	5.8	
11/2/16 11:40:15	6.72	2.1	
11/2/16 11:40:30	6.73	2.1	
11/2/16 11:40:45	6.79	2.1	
11/2/16 11:41:00	6.80	2.2	
11/2/16 11:41:15	6.85	2.2	
11/2/16 11:41:30	6.84	2.2	
11/2/16 11:41:45	6.86	2.2	
11/2/16 11:42:00	6.93	2.2	
11/2/16 11:42:15	6.95	2.1	
11/2/16 11:42:30	6.92	2.1	
11/2/16 11:42:45	6.92	2.1	Begin Run No. 9
11/2/16 11:43:00	6.91	2.1	Point #3
11/2/16 11:43:15	6.91	2.1	
11/2/16 11:43:30	6.90	2.1	
11/2/16 11:43:45	6.86	2.1	
11/2/16 11:44:00	6.84	2.1	
11/2/16 11:44:15	6.76	2.1	
11/2/16 11:44:30	6.69	2.1	
11/2/16 11:44:45	6.63	2.1	
11/2/16 11:45:00	6.58	2.1	
11/2/16 11:45:15	6.58	2.1	
11/2/16 11:45:30	6.62	2.1	
11/2/16 11:45:45	6.64	2.1	
11/2/16 11:46:00	6.67	2.1	
11/2/16 11:46:15	6.77	2.1	
11/2/16 11:46:30	6.88	2.1	
11/2/16 11:46:45	6.96	2.0	
11/2/16 11:47:00	7.00	2.0	
11/2/16 11:47:15	7.02	2.1	
11/2/16 11:47:30	6.99	2.2	
11/2/16 11:47:45	6.96	2.1	
11/2/16 11:48:00	6.81	2.1	
11/2/16 11:48:15	6.57	2.0	
11/2/16 11:48:30	6.48	2.0	
11/2/16 11:48:45	6.49	2.1	
11/2/16 11:49:00	6.53	2.1	
11/2/16 11:49:15	6.59	2.1	

Monroe Energy - Trainer, PA
Boiler No. 14 RA Test
ARI Reference Method Monitoring Data

Date/Time	O_2 % db	NO_x ppmv db	Comments
11/2/16 12:02:15	7.02	2.1	
11/2/16 12:02:30	7.05	2.1	
11/2/16 12:02:45	7.05	2.1	
11/2/16 12:03:00	7.10	2.3	
11/2/16 12:03:15	7.07	2.3	
11/2/16 12:03:30	7.07	2.2	
11/2/16 12:03:45	7.08	2.1	
11/2/16 12:04:00	7.10	2.1	End Run No. 9
11/2/16 12:04:15	7.10	2.1	
11/2/16 12:04:30	7.08	2.1	
11/2/16 12:04:45	6.97	2.1	
11/2/16 12:05:00	6.87	2.5	
11/2/16 12:05:15	5.98	5.3	
11/2/16 12:05:30	12.22	0.3	
11/2/16 12:05:45	12.36	0.2	
11/2/16 12:06:00	12.38	0.2	
11/2/16 12:06:15	12.38	0.2	System Bias
11/2/16 12:06:30	12.39	0.2	
11/2/16 12:06:45	12.39	0.2	12.39 12.48% O_2
11/2/16 12:07:00	12.39	0.2	0.2 Zero NOx
11/2/16 12:07:15	12.40	0.2	
11/2/16 12:07:30	12.40	0.2	
11/2/16 12:07:45	12.23	0.4	
11/2/16 12:08:00	7.68	1.9	
11/2/16 12:08:15	8.50	4.3	
11/2/16 12:08:30	0.46	10.6	
11/2/15 12:08:45	0.08	10.3	
11/2/16 12:09:00	0.05	12.2	System Bias
11/2/16 12:09:15	0.04	12.3	
11/2/16 12:09:30	0.04	12.3	0.03 Zero O_2
11/2/16 12:09:45	0.03	12.3	12.3 12.57 ppm NO_x
11/2/16 12:10:00	0.03	12.3	
11/2/16 12:10:15	0.03	12.3	
11/2/16 12:10:30	0.02	12.2	
11/2/16 12:10:45	0.02	12.2	
11/2/16 12:11:00	0.10	11.4	
11/2/16 12:11:15	5.73	3.3	
11/2/16 12:11:30	6.80	2.2	
11/2/16 12:11:45	6.80	2.2	
11/2/16 12:12:00	6.83	2.2	
11/2/16 12:12:15	6.86	2.2	
11/2/16 12:12:30	6.87	2.2	
11/2/16 12:12:45	6.87	2.2	
11/2/16 12:13:00	6.88	2.1	
11/2/16 12:13:15	6.92	2.1	
11/2/16 12:13:30	6.93	2.2	
11/2/16 12:13:45	6.95	2.2	
11/2/16 12:14:00	6.97	2.1	
11/2/16 12:14:15	6.95	2.2	
11/2/16 12:14:30	6.97	2.2	
11/2/16 12:14:45	7.03	2.2	Begin Run No. 10

Monroe Energy - Trainer, PA
Boiler No. 14 RA Test
ARI Reference Method Monitoring Data

Date/Time	O_2 % db	NO_x ppmv db	Comments
11/2/16 12:27:45	6.98	2.0	
11/2/16 12:28:00	6.91	2.0	
11/2/16 12:28:15	6.85	2.1	
11/2/16 12:28:30	6.79	2.1	
11/2/16 12:28:45	6.79	2.1	
11/2/16 12:29:00	6.80	2.1	Point #3
11/2/16 12:29:15	6.82	2.0	
11/2/16 12:29:30	6.87	2.0	
11/2/16 12:29:45	6.92	2.1	
11/2/16 12:30:00	6.98	2.1	
11/2/16 12:30:15	7.06	2.1	
11/2/16 12:30:30	7.06	2.1	
11/2/16 12:30:45	7.08	2.0	
11/2/16 12:31:00	7.12	2.0	
11/2/16 12:31:15	7.13	2.0	
11/2/16 12:31:30	7.12	2.0	
11/2/16 12:31:45	7.09	2.1	
11/2/16 12:32:00	7.09	2.1	
11/2/16 12:32:15	7.08	2.0	
11/2/16 12:32:30	7.01	1.9	
11/2/16 12:32:45	6.90	1.9	
11/2/16 12:33:00	6.86	2.0	
11/2/16 12:33:15	6.83	2.0	
11/2/16 12:33:30	6.88	2.0	
11/2/16 12:33:45	6.86	2.1	
11/2/16 12:34:00	6.91	2.0	
11/2/16 12:34:15	6.91	2.0	
11/2/16 12:34:30	6.89	2.0	
11/2/16 12:34:45	6.89	2.0	
11/2/16 12:35:00	6.87	2.1	
11/2/16 12:35:15	6.88	2.3	
11/2/16 12:35:30	6.89	2.1	
11/2/16 12:35:45	6.93	2.1	
11/2/16 12:36:00	6.98	2.1	End Run No. 10
11/2/16 12:36:15	7.01	2.0	
11/2/16 12:36:30	7.09	2.0	
11/2/16 12:36:45	7.10	2.0	
11/2/16 12:37:00	7.11	2.0	
11/2/16 12:37:15	7.11	2.0	
11/2/16 12:37:30	7.09	2.0	
11/2/16 12:37:45	6.97	2.1	
11/2/16 12:38:00	6.21	5.3	
11/2/16 12:38:15	12.20	0.5	
11/2/16 12:38:30	12.36	0.3	
11/2/16 12:38:45	12.37	0.2	
11/2/16 12:39:00	12.38	0.2	
11/2/16 12:39:15	12.38	0.2	System Bias
11/2/16 12:39:30	12.39	0.2	
11/2/16 12:39:45	12.39	0.2	12.39 12.48% O_2
11/2/16 12:40:00	12.39	0.2	0.2 Zero NOx
11/2/16 12:40:15	12.39	0.2	

APPENDIX D

CEMS and Performance Tests Data

RATA Run Detail Report

Plant: TRAN
Source: BOILER14

Test Date/Time: 11/2/2016 1:36:00 PM
Parameter: NOX#/HR

Operating Level: N
Run Number: 2

Date/Time	NOX#/HR	LOAD	HEATIN	NFFACT	NOX#MM	NOXPPM	O2
11/02/2016 07:55	0.6434400	18.8301883	229.8482850	8,551.9247400	0.0027900	1.8550718	6.7103584
11/02/2016 07:56	0.6667100	18.9103592	229.8597360	8,551.9160200	0.0028510	1.8869059	6.7756557
11/02/2016 07:57	0.6667100	19.7374720	229.8631490	8,551.8519900	0.0028671	1.8777135	6.9234746
11/02/2016 07:58	0.6661300	21.3724955	229.6998210	8,551.9512400	0.0028727	1.8663438	7.0353458
11/02/2016 07:59	0.6664200	22.3781997	229.8291960	8,551.9536900	0.0028664	1.8809880	6.8953531
11/02/2016 08:00	0.6667100	19.6551416	229.9316560	8,551.9949100	0.0028604	1.9067702	6.6738721
11/02/2016 08:01	0.6670000	18.7334966	229.9545590	8,552.0759100	0.0028640	1.9052114	6.7034406
11/02/2016 08:02	0.6672900	19.4801754	230.0779120	8,551.9110100	0.0028813	1.9084110	6.7647755
11/02/2016 08:03	0.6670000	19.1450651	229.9971510	8,552.0262400	0.0028680	1.8855858	6.8692433
11/02/2016 08:04	0.6667100	20.9575516	229.9069470	8,552.0961900	0.0028555	1.8615618	6.9873632
11/02/2016 08:05	0.6675800	21.8732274	230.2147230	8,551.9113600	0.0028843	1.8754319	7.0232047
11/02/2016 08:06	0.6667100	21.4650912	229.9394930	8,551.8344900	0.0029058	1.8903884	7.0164787
11/02/2016 08:07	0.6664200	21.3687417	229.7910290	8,551.8174800	0.0029407	1.9263156	6.9206266
11/02/2016 08:08	0.6672900	20.7121468	230.1227120	8,551.8174800	0.0029212	1.9194912	6.8774650
11/02/2016 08:09	0.6903000	20.0364652	230.0658580	8,551.8204000	0.0030057	1.9670550	6.9336318
11/02/2016 08:10	0.6900000	20.5232921	230.0200530	8,550.5025300	0.0029539	1.9286811	6.9662149
11/02/2016 08:11	0.6876000	20.2600630	229.2059060	8,545.7730500	0.0029603	1.9392230	6.9225432
11/02/2016 08:12	0.6804000	19.9005137	226.8366700	8,545.7535300	0.0029878	1.9601439	6.9092883
11/02/2016 08:13	0.7043200	19.7331201	227.1684200	8,545.8649100	0.0030726	2.0155734	6.9107705
11/02/2016 08:14	0.7040100	20.2695756	227.1038960	8,545.7629100	0.0030746	2.0176981	6.9047860
11/02/2016 08:15	0.6583000	19.5145083	226.9634180	8,545.8696100	0.0029300	1.9276905	6.8695922
Avg (unrounded)	0.6727167	20.2312805	229.3524090	8,550.4014138	0.0029149	1.9143931	6.8854040
# Valid Minutes	21	21	21	21	21	21	21
Round Precision	2	0	1	1	4	2	2
Rounded Average	0.67	20	229.4	8550.4	0.0029	1.91	6.89

RATA Run Detail Report

Plant: TRAN
Source: BOILER14

Test Date/Time: 11/2/2016 1:36:00 PM
Parameter: NOX#/HR

Operating Level: N
Run Number: 4

Date/Time	NOX#/HR	LOAD	HEATIN	NFFACT	NOX#MM	NOXPPM	O2
11/02/2016 09:07	0.6437200	18.6792346	229.8720060	8,548.8167200	0.0028403	1.8739842	6.8248518
11/02/2016 09:08	0.6423200	18.8500331	229.3664340	8,548.8131100	0.0028191	1.8566897	6.8497880
11/02/2016 09:09	0.6445600	19.5380237	230.1683870	8,548.8665200	0.0028110	1.8554646	6.8185608
11/02/2016 09:10	0.6426000	19.5048640	229.5480280	8,548.9018300	0.0028152	1.8599042	6.8060007
11/02/2016 09:11	0.6417600	19.5399685	229.1911530	8,548.7393600	0.0027821	1.8211282	6.9351469
11/02/2016 09:12	0.6431600	21.0057714	229.6568290	8,548.7757200	0.0028346	1.8409969	7.0446591
11/02/2016 09:13	0.6426000	21.9821275	229.5190420	8,548.7329000	0.0028170	1.8332724	7.0164608
11/02/2016 09:14	0.6426000	20.6210345	229.4960440	8,548.7376000	0.0027787	1.8474057	6.7168398
11/02/2016 09:15	0.6193800	17.4738607	229.4042520	8,548.6499100	0.0027301	1.8247850	6.6412052
11/02/2016 09:16	0.6431600	17.8453667	229.6796270	8,548.8166100	0.0028119	1.8576537	6.8061701
11/02/2016 09:17	0.6641000	19.8854224	229.0358860	8,548.7444500	0.0028819	1.8927366	6.8889767
11/02/2016 09:18	0.6652600	20.1406165	229.3806550	8,548.7809400	0.0028811	1.8821206	6.9637697
11/02/2016 09:19	0.6658400	20.8382153	229.6447310	8,548.8744900	0.0028849	1.8812501	6.9887627
11/02/2016 09:20	0.6652600	20.5801684	229.4270500	8,544.3289900	0.0029394	1.9189129	6.9729520
11/02/2016 09:21	0.6398000	19.0833501	228.5238470	8,542.5989900	0.0028135	1.8806467	6.6475815
11/02/2016 09:22	0.6603300	17.4874865	227.6674330	8,542.5333600	0.0028564	1.9108633	6.6391889
11/02/2016 09:23	0.6145200	18.0245840	227.6189390	8,542.6596200	0.0027441	1.8225445	6.7414688
11/02/2016 09:24	0.6381200	18.8115987	227.9276430	8,542.7071700	0.0028304	1.8574778	6.9100056
11/02/2016 09:25	0.6381200	20.9659715	227.8614790	8,542.5545000	0.0027647	1.7851326	7.1353751
11/02/2016 09:26	0.6609100	22.3366647	227.8873810	8,542.5615200	0.0028981	1.8762414	7.0988106
11/02/2016 09:27	0.6147900	20.5764758	227.7420350	8,542.5409900	0.0027073	1.7968968	6.7511626
Avg (unrounded)	0.6444243	19.7033733	228.9818515	8,546.5207286	0.0028210	1.8560051	6.8665589
# Valid Minutes	21	21	21	21	21	21	21
Round Precision	2	0	1	1	4	2	2
Rounded Average	0.64	20	229	8546.5	0.0028	1.86	6.87

RATA Run Detail Report

Plant: TRAN
Source: BOILER14
Test Date/Time: 11/2/2016 1:36:00 PM
Parameter: NOX#/HR
Operating Level: N
Run Number: 6

Date/Time	NOX#/HR	LOAD	HEATIN	NFFACT	NOX#MM	NOXPPM	O2
11/02/2016 10:08	0.6496000	19.6438561	224.0322620	8,533.4534200	0.0029415	1.9176488	7.0172808
11/02/2016 10:09	0.6510500	20.1353951	224.4501230	8,533.4211000	0.0029083	1.8939359	7.0322004
11/02/2016 10:10	0.6723000	19.4813016	224.1332560	8,533.3336900	0.0029831	1.9350321	7.0865866
11/02/2016 10:11	0.6937800	20.9301325	223.8007270	8,533.5279200	0.0030598	1.9677625	7.2052873
11/02/2016 10:12	0.6953300	21.9764985	224.3171840	8,537.4257100	0.0030534	1.9600985	7.2297547
11/02/2016 10:13	0.6792000	21.3702286	226.4140190	8,539.6312100	0.0029848	1.9302469	7.1224129
11/02/2016 10:14	0.6822000	20.3300575	227.3707020	8,539.6276800	0.0030170	1.9581151	7.0692316
11/02/2016 10:15	0.6831000	20.8841221	227.7274070	8,539.6247600	0.0029759	1.9208887	7.1444267
11/02/2016 10:16	0.6819000	21.8457664	227.3356460	8,539.4492600	0.0030234	1.9315675	7.2854902
11/02/2016 10:17	0.7046300	22.2426346	227.2693050	8,539.4615500	0.0030598	1.9527647	7.2999858
11/02/2016 10:18	0.6831000	20.9474168	227.6608530	8,539.5312800	0.0030185	1.9482873	7.1454990
11/02/2016 10:19	0.7040100	19.3376908	227.1268950	8,539.6858500	0.0030779	2.0141033	6.9552229
11/02/2016 10:20	0.6594600	17.4801509	227.3964480	8,539.4874000	0.0029399	1.9343429	6.8784333
11/02/2016 10:21	0.7046300	19.3485151	227.2603900	8,539.4586300	0.0031422	2.0275141	7.1495094
11/02/2016 10:22	0.7030800	21.8654170	226.7652610	8,539.5142500	0.0030800	1.9699188	7.2704387
11/02/2016 10:23	0.7043200	23.3013714	227.2417680	8,539.6852600	0.0030931	1.9929128	7.1698693
11/02/2016 10:24	0.6583000	21.3837227	226.9943830	8,539.6229900	0.0029489	1.9435545	6.8549174
11/02/2016 10:25	0.6591700	18.7907617	227.3247520	8,539.5255100	0.0029336	1.9347894	6.8453557
11/02/2016 10:26	0.6574300	19.0957618	226.7252340	8,539.4937900	0.0028970	1.8892140	7.0030470
11/02/2016 10:27	0.6819000	21.3073990	227.2859370	8,539.4990300	0.0029978	1.9308454	7.1744961
11/02/2016 10:28	0.6810000	22.1843798	227.0437170	8,539.4679900	0.0030221	1.9507590	7.1443157
Avg (unrounded)	0.6804519	20.6610752	226.4607747	8,538.2822990	0.0030075	1.9478239	7.0992267
# Valid Minutes	21	21	21	21	21	21	21
Round Precision	2	0	1	1	4	2	2
Rounded Average	0.68	21	226.5	8538.3	0.003	1.95	7.1

RATA Run Detail Report

Plant: TRAN
Source: BOILER14
Test Date/Time: 11/2/2016 1:36:00 PM
Parameter: NOX#/HR
Operating Level: N
Run Number: 8

Date/Time	NOX#/HR	LOAD	HEATIN	NFFACT	NOX#MM	NOXPPM	O2
11/02/2016 11:11	0.6729000	17.8847443	224.2516320	8,506.2955700	0.0029798	1.9512061	7.0001137
11/02/2016 11:12	0.6277600	21.8898439	224.1622390	8,506.2442800	0.0028426	1.8770899	6.8825975
11/02/2016 11:13	0.6064200	18.0941095	224.5804100	8,506.3749700	0.0026924	1.8447697	6.3556956
11/02/2016 11:14	0.6056100	15.8577743	224.2577450	8,506.4624900	0.0027207	1.8507839	6.4598240
11/02/2016 11:15	0.6272000	16.7760469	223.9644490	8,506.2632500	0.0028281	1.8826033	6.7694278
11/02/2016 11:16	0.6504700	18.7350546	224.2669480	8,506.2402700	0.0028537	1.8805396	6.9115642
11/02/2016 11:17	0.6277600	18.5444235	224.2039780	8,506.3643000	0.0027762	1.8790787	6.5325392
11/02/2016 11:18	0.6058800	16.4575492	224.4141840	8,506.4698300	0.0026814	1.8114199	6.5601395
11/02/2016 11:19	0.6269200	17.1455105	223.8617110	8,506.2864000	0.0028445	1.8770651	6.8922750
11/02/2016 11:20	0.6274800	20.1896402	224.1326590	8,506.2365300	0.0028072	1.8322378	7.0453440
11/02/2016 11:21	0.6272000	19.5596990	224.0338060	8,504.2092900	0.0027994	1.8599141	6.7966310
11/02/2016 11:22	0.6230000	17.6291653	222.4811600	8,487.8245900	0.0027884	1.8700093	6.6677241
11/02/2016 11:23	0.5702400	16.2724504	211.2226570	8,487.8335200	0.0026607	1.7912444	6.6403767
11/02/2016 11:24	0.5697000	17.3868671	210.9769400	8,487.9109000	0.0027167	1.8206569	6.7048823
11/02/2016 11:25	0.5902400	17.3409145	210.7838250	8,487.7977400	0.0028230	1.8788824	6.8025520
11/02/2016 11:26	0.5916400	18.2737731	211.2559930	8,487.7280200	0.0028066	1.8626340	6.8430361
11/02/2016 11:27	0.5910800	17.2128090	211.1431030	8,487.6965300	0.0028240	1.8802461	6.7974034
11/02/2016 11:28	0.5908000	16.9357423	211.0299370	8,487.7820000	0.0027735	1.8641559	6.6636552
11/02/2016 11:29	0.5691600	16.6161870	210.8473440	8,487.7765200	0.0027130	1.8265054	6.6403235
11/02/2016 11:30	0.5910800	17.3629490	211.1312040	8,487.7135400	0.0027975	1.8745742	6.7069937
11/02/2016 11:31	0.5913600	17.1933773	211.1625670	8,487.7310000	0.0028144	1.8756002	6.7846385
Avg (unrounded)	0.6087571	17.7789824	218.4840234	8,497.3924543	0.0027878	1.8614865	6.7360827
# Valid Minutes	21	21	21	21	21	21	21
Round Precision	2	0	1	1	4	2	2
Rounded Average	0.61	18	218.5	8497.4	0.0028	1.86	6.74

RATA Run Detail Report

Plant: TRAN
Source: BOILER14
Test Date/Time: 11/2/2016 1:36:00 PM
Parameter: NOX#/HR
Operating Level: N
Run Number: 10

Date/Time	NOX#/HR	LOAD	HEATIN	NFFACT	NOX#MM	NOXPPM	O2
11/02/2016 12:16	0.6789000	21.0031654	219.0173290	8,518.3851200	0.0030774	1.9880798	7.1672909
11/02/2016 12:17	0.6356800	20.3633154	219.1738730	8,518.5307000	0.0029292	1.9263262	6.9203828
11/02/2016 12:18	0.6576000	18.8019562	219.1907400	8,518.3956700	0.0029552	1.9475110	6.8907524
11/02/2016 12:19	0.6345200	19.5339360	218.8207530	8,518.4802300	0.0028683	1.8798985	6.9678748
11/02/2016 12:20	0.6348100	19.1224153	218.9459090	8,518.4138400	0.0028801	1.8888055	6.9589767
11/02/2016 12:21	0.6132000	19.8216409	219.0400840	8,518.5670600	0.0028438	1.8675496	6.9400471
11/02/2016 12:22	0.6351000	19.4681028	218.9898540	8,518.5924200	0.0028676	1.8731659	7.0142659
11/02/2016 12:23	0.6336500	19.5641398	218.5119560	8,518.4852200	0.0028726	1.8787087	6.9972192
11/02/2016 12:24	0.6359700	20.4678653	219.3343410	8,518.4050200	0.0029434	1.9299516	6.9617571
11/02/2016 12:25	0.6561000	18.9930220	218.7399360	8,518.4888300	0.0030109	1.9726751	6.9724646
11/02/2016 12:26	0.6576000	19.2395266	219.2034900	8,518.5162500	0.0029741	1.9492059	6.9680360
11/02/2016 12:27	0.6342300	20.0853983	218.6798850	8,518.4943400	0.0029099	1.9068093	6.9702033
11/02/2016 12:28	0.6118000	19.6686279	218.4858790	8,518.5228500	0.0028215	1.8586866	6.8965397
11/02/2016 12:29	0.6345200	18.4336587	218.8260370	8,518.5705600	0.0028624	1.8912495	6.8548409
11/02/2016 12:30	0.6348100	19.0211406	218.9486500	8,518.5148600	0.0028573	1.8605956	7.0573479
11/02/2016 12:31	0.6555000	20.9442138	218.4888100	8,505.6506200	0.0029541	1.9104810	7.1524198
11/02/2016 12:32	0.6096400	22.4116401	217.8403260	8,497.1627000	0.0028398	1.8470294	7.0946049
11/02/2016 12:33	0.6078800	20.0131209	217.0859040	8,497.1883000	0.0027710	1.8301617	6.8952817
11/02/2016 12:34	0.6087200	18.6976387	217.3758400	8,497.0551700	0.0027664	1.8233670	6.9236839
11/02/2016 12:35	0.6073200	19.5951014	216.8710670	8,497.1325800	0.0027611	1.8211021	6.9146359
11/02/2016 12:36	0.6284300	19.3049904	216.6969340	8,497.0078800	0.0028648	1.8697397	7.0609215
Avg (unrounded)	0.6336276	19.7406960	218.4889332	8,512.7885819	0.0028872	1.8914809	6.9799784
# Valid Minutes	21	21	21	21	21	21	21
Round Precision	2	0	1	1	4	2	2
Rounded Average	0.63	20	218.5	8512.8	0.0029	1.89	6.98

Values in RED are invalid

Linearity Test

Plant: MONROE ENERGY, LLC.

Report Period: 10/27/2016 00:00 Through 11/02/2016 23:59

Source: BOILER14
Parameter: NOXPPM
System ID:
Component ID:
Span Value: 30.000
Span Scale Code: H

Test End Date/Time: 10/31/16 08:01
Test Number: XML (37-Q4-2016-2) / EDR (2)
Reason for Test: Periodic Quality Assurance
Test Result: Pass
Abbreviated?: No

Injection Time	Reference Value	Measured Value	Difference	% of Reference
Low-Level				
10/31/16 07:37	7.500	7.420	0.100	1.1
10/31/16 07:46	7.500	7.430	0.100	0.9
10/31/16 07:55	7.500	7.470	0.000	0.4

Reference Mean: 7.500
Measured Mean: 7.440
Level Error: 0.8
APS Indicator: False
Gas Type Code:
Vendor Identifier: A12011
Cylinder #: cc13025
Cylinder Exp. Date: 10/05/2019

Injection Time	Reference Value	Measured Value	Difference	% of Reference
Mid-Level				
10/31/16 07:40	15.000	14.990	0.000	0.1
10/31/16 07:49	15.000	15.030	0.000	0.2
10/31/16 07:58	15.000	15.020	0.000	0.1

Reference Mean: 15.000
Measured Mean: 15.013
Level Error: 0.1
APS Indicator: False
Gas Type Code: BALN,NO
Vendor Identifier: A12011
Cylinder #: AAL13941
Cylinder Exp. Date: 04/14/2019

Injection Time	Reference Value	Measured Value	Difference	% of Reference
High-Level				
10/31/16 07:43	27.800	28.490	-0.700	2.5
10/31/16 07:52	27.800	28.500	-0.700	2.5
10/31/16 08:01	27.800	28.560	-0.800	2.7

Reference Mean: 27.800
Measured Mean: 28.517
Level Error: 2.6
APS Indicator: False
Gas Type Code: BALN,NO
Vendor Identifier: A12011
Cylinder #: AAL12739
Cylinder Exp. Date: 08/20/2016

Cycle Time Test

Plant: MONROE ENERGY, LLC.
Report Period: 10/01/2016 00:00 Through 11/02/2016 23:59

Source: BOILER14
Parameter: NOXPPM
Component ID:
Span Scale Level: H

Test Completion: 10/27/16 12:57
Test Number: XML (-1) / EDR (1)
Test Reason Code: C
Test Result: Pass

Date	Start Time	End Time	Gas Level	Reference Gas Value	Stable Starting Value	Stable Ending Value	Injection Cycle Time
10/27/2016	12:31	12:34	HIGH	.00	.00	1.91	3
10/27/2016	12:52	12:57	ZERO	27.90	28.84	1.71	5

Source: BOILER14
Parameter: O2
Component ID:
Span Scale Level: H

Test Completion: 10/27/16 12:44
Test Number: XML (-1) / EDR (1)
Test Reason Code: C
Test Result: Pass

Date	Start Time	End Time	Gas Level	Reference Gas Value	Stable Starting Value	Stable Ending Value	Injection Cycle Time
10/27/2016	12:31	12:34	HIGH	.00	.00	7.85	3
10/27/2016	12:41	12:44	ZERO	21.92	22.05	7.86	3

Scott™

RATA CLASS

Guaranteed +/- 1% Accuracy

6141 Easton Road, Plumsteadville, PA 18949

Phone: 215-766-8860

Fax: 215-766-7226

CERTIFICATE OF ACCURACY : EPA Protocol Gas

Customer:
MONROE ENERGY LLC
MONROE ENERGY LLC-3
4101 Post Rd
Warehouse: Drop Point Warehouse Dock
Trainer, PA 19061-5052
US

Assay Laboratory - PGVP Vendor ID: A12016
Air Liquide America Specialty Gases LLC
6141 Easton Road
Plumsteadville, PA 18949

Lot No: 403-429794
P.O. No.: TPO9223
Folio #: 20001182
Sales Order # : 3157243

ANALYTICAL INFORMATION

Gas Type : O2,BALN

This certification was performed according to EPA Traceability Protocol For Assay & Certification of Gaseous Calibration Standards; Procedure G -1, EPA/600/R-12/531; May 2012. Do not use this standard if pressure is less than 100 psig.

Cylinder Number: ALM046375
Cylinder Pressure: 2000 PSIG

Certification Date: 20May2016

Expiration Date: 21May2024
Lot No: 403-429794

Component Name	Concentration (Mole)	Accuracy (Absolute / Relative)
OXYGEN	13.08 %	0.11 % / 0.8 %
NITROGEN	BALANCE	

TRACEABILITY

Analytical Traceability

Reference Standard

Component	Concentration	Uncertainty	Cylinder	Type	Exp. Date
OXYGEN	23.2000 %	0.09 %	K004939	NTRM 2350	04Jan2018

ANALYTICAL METHOD

1st Analysis: 05/20/2016

COMPONENT	INSTRUMENT	ANALYTICAL PRINCIPLE	CALIBRATED	CONCENTRATION
OXYGEN	SIEMENS OXYMAT 61 -- S/N V1-0407	Paramagnetic	05/02/2016	13.08 %

APPROVED BY: David Ashnoff
DAVID ASHNOFF

DATE: 20May2016

AIR LIQUIDE

Airgas
an Air Liquide company

RATA CLASS

Guaranteed +/- 1% Accuracy

6141 Easton Road, Plumsteadville, PA 18949 Phone: 215-766-8860 Fax: 215-766-7226

CERTIFICATE OF ACCURACY : EPA Protocol Gas

Customer:
MONROE ENERGY LLC
MONROE ENERGY LLC-3
4101 Post Rd
Warehouse: Drop Point Warehouse Dock
Trainer, PA 19061-5052
US

Assay Laboratory - PGVP Vendor ID: A12016
Air Liquide America Specialty Gases LLC
6141 Easton Road
Plumsteadville, PA 18949

Lot No: 403-582353
P.O. No.:
Folio #: 20001178
Sales Order # : 5351916

ANALYTICAL INFORMATION

Gas Type : NO,BALN

This certification was performed according to EPA Traceability Protocol For Assay & Certification of Gaseous Calibration Standards; Procedure G -1. EPA/600/R-12/531; May 2012. Do not use this standard if pressure is less than 100 psig.

Cylinder Number: CC13025
Cylinder Pressure: 2000 PSIG

Certification Date: 04Oct2016

Expiration Date: 05Oct2019
Lot No: 403-582353

Component Name	Concentration (Mole)	Accuracy (Absolute / Relative)
NITRIC OXIDE	7.50 PPM	0.08 PPM / 1.0 %
NITROGEN	BALANCE	
OXIDES OF NITROGEN	7.52 PPM	Reference Value Only

TRACEABILITY

Analytical Traceability

Reference Standard

Component	Concentration	Uncertainty	Cylinder	Type	Exp. Date
NITRIC OXIDE	10.0400 PPM	0.10 PPM	AAL073629	NTRM 2628	25Aug2017
OXIDES OF NITROGEN	10.0400 PPM	0.10 PPM	AAL073629	NTRM 2628	25Aug2017

ANALYTICAL METHOD

1st Analysis: 09/23/2016

COMPONENT	INSTRUMENT	ANALYTICAL PRINCIPLE	CALIBRATED	CONCENTRATION
NITRIC OXIDE	HORIBA CLA 220 CHEMILUMINESCENCE NOx ANALYZER -- S/N 5708850810	Chemiluminescence	09/15/2016	7.50 PPM

2nd Analysis: 10/04/2016

COMPONENT	INSTRUMENT	ANALYTICAL PRINCIPLE	CALIBRATED	CONCENTRATION
NITRIC OXIDE	HORIBA CLA 220 CHEMILUMINESCENCE NOx ANALYZER -- S/N 5708850810	Chemiluminescence	09/15/2016	7.50 PPM

APPROVED BY: JOHN C FITZ

DATE: 04Oct2016

Scott™

RATA CLASS

Guaranteed +/- 1% Accuracy

6141 Easton Road, Plumsteadville, PA 18949 Phone: 215-766-8860 Fax: 215-766-7226

CERTIFICATE OF ACCURACY : EPA Protocol Gas

Customer:
MONROE ENERGY LLC
MONROE ENERGY LLC-3
4101 Post Rd
Warehouse: Drop Point Warehouse Dock
Trainer, PA 19061-5052
US

Assay Laboratory - PGVP Vendor ID: A12016
Air Liquide America Specialty Gases LLC
6141 Easton Road
Plumsteadville, PA 18949

Lot No: 403-433779
P.O. No.: TPO9223
Folio #: 20001176
Sales Order # : 3157243

ANALYTICAL INFORMATION

Gas Type : NO,BALN

This certification was performed according to EPA Traceability Protocol For Assay & Certification of Gaseous Calibration Standards; Procedure G -1. EPA/600/R-12/531; May 2012. Do not use this standard if pressure is less than 100 psig.

Cylinder Number: AAL689
Cylinder Pressure: 2004 PSIG
Certification Date: 26May2016
Expiration Date: 27May2019
Lot No: 403-433779

Component Name	Concentration (Mole)	Accuracy (Absolute / Relative)
NITRIC OXIDE	27.9 PPM	0.2 PPM / 0.8 %
NITROGEN	BALANCE	

TRACEABILITY

Analytical Traceability

Reference Standard

Component	Concentration	Uncertainty	Cylinder	Type	Exp. Date
CARBON DIOXIDE			KAL003435	NTRM 1683	15Mar2018
NITRIC OXIDE	49.4600 PPM	0.40 PPM	KAL003435	NTRM 1683	15Mar2018

ANALYTICAL METHOD

1st Analysis: 05/18/2016

COMPONENT	INSTRUMENT	ANALYTICAL PRINCIPLE	CALIBRATED	CONCENTRATION
NITRIC OXIDE	MKS 2030 FTIR	FTIR	05/05/2016	27.9429 PPM

2nd Analysis: 05/26/2016

COMPONENT	INSTRUMENT	ANALYTICAL PRINCIPLE	CALIBRATED	CONCENTRATION
NITRIC OXIDE	MKS 2030 FTIR	FTIR	05/05/2016	27.9482 PPM

COMMENTS

Oxides of Nitrogen = 28.1 ppm

APPROVED BY: MICHAEL A KUHNS

DATE: 26May2016

D-20

AIR LIQUIDE

Average Data

Plant: MONROE ENERGY, LLC.
Interval: 1 Hour
Type: Block
Report Period: 10/31/2016 10:00 Through 10/31/2016 18:59
Time Online Criteria: 1 minute(s)

Source		BOILER14
Parameter Unit		NOX#MM (LB/MMBTU)
10/31/16	10:00	0.0028
10/31/16	11:00	0.0028
10/31/16	12:00	0.0030
10/31/16	13:00	0.0030
10/31/16	14:00	0.0031
10/31/16	15:00	0.0032
10/31/16	16:00	0.0030
10/31/16	17:00	0.0029
10/31/16	18:00	0.0026

Average	0.0029
Minimum	0.0026
Maximum	0.0032
Summation	0.0264
Included Data Points	9
Total number of Data Points	9

F = Unit Offline E = Exceedance C = Calibration S = Substituted I = Invalid
M = Maintenance T = Out Of Control * = Suspect U = Startup D = Shutdown

Average Data

Plant: MONROE ENERGY, LLC.
Interval: 1 Minute
Type: Block
Report Period: 10/31/2016 10:00 Through 10/31/2016
Time Online Criteria: 1 minute(s)

10/31/16	10:43	0.0028
10/31/16	10:44	0.0027
10/31/16	10:45	0.0028
10/31/16	10:46	0.0028
10/31/16	10:47	0.0028
10/31/16	10:48	0.0027
10/31/16	10:49	0.0027
10/31/16	10:50	0.0028
10/31/16	10:51	0.0028
10/31/16	10:52	0.0028
10/31/16	10:53	0.0028
10/31/16	10:54	0.0029
10/31/16	10:55	0.0029
10/31/16	10:56	0.0028
10/31/16	10:57	0.0029
10/31/16	10:58	0.0028
10/31/16	10:59	0.0028
10/31/16	11:00	0.0030
10/31/16	11:01	0.0028
10/31/16	11:02	0.0028
10/31/16	11:03	0.0028
10/31/16	11:04	0.0028
10/31/16	11:05	0.0028
10/31/16	11:06	0.0029
10/31/16	11:07	0.0029
10/31/16	11:08	0.0027
10/31/16	11:09	0.0027
10/31/16	11:10	0.0028
10/31/16	11:11	0.0027
10/31/16	11:12	0.0028
10/31/16	11:13	0.0028
10/31/16	11:14	0.0028
10/31/16	11:15	0.0029
10/31/16	11:16	0.0027
10/31/16	11:17	0.0027
10/31/16	11:18	0.0028
10/31/16	11:19	0.0027
10/31/16	11:20	0.0028
10/31/16	11:21	0.0028
10/31/16	11:22	0.0028
10/31/16	11:23	0.0028
10/31/16	11:24	0.0028
10/31/16	11:25	0.0029
10/31/16	11:26	0.0028
10/31/16	11:27	0.0027
10/31/16	11:28	0.0027
10/31/16	11:29	0.0027
10/31/16	11:30	0.0028

NOx lb/mmbtu
0.0028

F = Unit Offline
E = Exceedance
M = Maintenance
T = Out Of Control

C = Calibration
S = Substituted
*** = Suspect**
U = Startup

Report Generated: 11/01/16 14:20
Report Version 4.0
MONROE\

Average Data

Plant: MONROE ENERGY, LLC.
Interval: 1 Minute
Type: Block
Report Period: 10/31/2016 10:00 Through 10/31/2016
Time Online Criteria: 1 minute(s)

10/31/16	12:19	0.0029
10/31/16	12:20	0.0029
10/31/16	12:21	0.0029
10/31/16	12:22	0.0030
10/31/16	12:23	0.0029
10/31/16	12:24	0.0030
10/31/16	12:25	0.0029
10/31/16	12:26	0.0030
10/31/16	12:27	0.0030
10/31/16	12:28	0.0031
10/31/16	12:29	0.0030
10/31/16	12:30	0.0030
10/31/16	12:31	0.0029
10/31/16	12:32	0.0030
10/31/16	12:33	0.0030
10/31/16	12:34	0.0030
10/31/16	12:35	0.0030
10/31/16	12:36	0.0030
10/31/16	12:37	0.0030
10/31/16	12:38	0.0030
10/31/16	12:39	0.0031
10/31/16	12:40	0.0031
10/31/16	12:41	0.0030
10/31/16	12:42	0.0031
10/31/16	12:43	0.0031
10/31/16	12:44	0.0030
10/31/16	12:45	0.0030
10/31/16	12:46	0.0030
10/31/16	12:47	0.0029
10/31/16	12:48	0.0030
10/31/16	12:49	0.0030
10/31/16	12:50	0.0030
10/31/16	12:51	0.0031
10/31/16	12:52	0.0030
10/31/16	12:53	0.0030
10/31/16	12:54	0.0030
10/31/16	12:55	0.0030
10/31/16	12:56	0.0030
10/31/16	12:57	0.0030
10/31/16	12:58	0.0030
10/31/16	12:59	0.0031
10/31/16	13:00	0.0029
10/31/16	13:01	0.0030
10/31/16	13:02	0.0029
10/31/16	13:03	0.0030
10/31/16	13:04	0.0029
10/31/16	13:05	0.0028
10/31/16	13:06	0.0027

NOx lb/mmbtu
0.0030

F = Unit Offline
E = Exceedance
M = Maintenance
T = Out Of Control

C = Calibration
S = Substituted
* = Suspect
U = Startup

Report Generated: 11/01/16 14:20

Report Version 4.0
MONROE\

Average Data

Plant: MONROE ENERGY, LLC.
Interval: 1 Minute
Type: Block
Report Period: 10/31/2016 10:00 Through 10/31/2016
Time Online Criteria: 1 minute(s)

10/31/16	13:55	0.0031
10/31/16	13:56	0.0031
10/31/16	13:57	0.0032
10/31/16	13:58	0.0030
10/31/16	13:59	0.0029
10/31/16	14:00	0.0030
10/31/16	14:01	0.0030
10/31/16	14:02	0.0030
10/31/16	14:03	0.0030
10/31/16	14:04	0.0031
10/31/16	14:05	0.0031
10/31/16	14:06	0.0031
10/31/16	14:07	0.0031
10/31/16	14:08	0.0032
10/31/16	14:09	0.0032
10/31/16	14:10	0.0031
10/31/16	14:11	0.0033
10/31/16	14:12	0.0034
10/31/16	14:13	0.0032
10/31/16	14:14	0.0034
10/31/16	14:15	0.0032
10/31/16	14:16	0.0032
10/31/16	14:17	0.0033
10/31/16	14:18	0.0032
10/31/16	14:19	0.0032
10/31/16	14:20	0.0032
10/31/16	14:21	0.0031
10/31/16	14:22	0.0032
10/31/16	14:23	0.0032
10/31/16	14:24	0.0032
10/31/16	14:25	0.0033
10/31/16	14:26	0.0033
10/31/16	14:27	0.0032
10/31/16	14:28	0.0031
10/31/16	14:29	0.0033
10/31/16	14:30	0.0032
10/31/16	14:31	0.0033
10/31/16	14:32	0.0033
10/31/16	14:33	0.0033
10/31/16	14:34	0.0032
10/31/16	14:35	0.0033
10/31/16	14:36	0.0032
10/31/16	14:37	0.0033
10/31/16	14:38	0.0032
10/31/16	14:39	0.0031
10/31/16	14:40	0.0030
10/31/16	14:41	0.0031
10/31/16	14:42	0.0031

NOx lb/mmbtu
0.0030

F = Unit Offline
E = Exceedance
M = Maintenance
T = Out Of Control

C = Calibration
S = Substituted
*** = Suspect**
U = Startup

Report Generated: 11/01/16 14:20
Report Version 4.0
MONROE\

Average Data

Plant: MONROE ENERGY, LLC.
Interval: 1 Minute
Type: Block
Report Period: 10/31/2016 10:00 Through 10/31/2016
Time Online Criteria: 1 minute(s)

10/31/16	15:31	0.0032
10/31/16	15:32	0.0031
10/31/16	15:33	0.0031
10/31/16	15:34	0.0032
10/31/16	15:35	0.0032
10/31/16	15:36	0.0033
10/31/16	15:37	0.0033
10/31/16	15:38	0.0033
10/31/16	15:39	0.0034
10/31/16	15:40	0.0034
10/31/16	15:41	0.0033
10/31/16	15:42	0.0034
10/31/16	15:43	0.0033
10/31/16	15:44	0.0033
10/31/16	15:45	0.0033
10/31/16	15:46	0.0032
10/31/16	15:47	0.0032
10/31/16	15:48	0.0033
10/31/16	15:49	0.0033
10/31/16	15:50	0.0033
10/31/16	15:51	0.0034
10/31/16	15:52	0.0033
10/31/16	15:53	0.0031
10/31/16	15:54	0.0030
10/31/16	15:55	0.0032
10/31/16	15:56	0.0031
10/31/16	15:57	0.0032
10/31/16	15:58	0.0031
10/31/16	15:59	0.0030
10/31/16	16:00	0.0032
10/31/16	16:01	0.0033
10/31/16	16:02	0.0033
10/31/16	16:03	0.0032
10/31/16	16:04	0.0031
10/31/16	16:05	0.0031
10/31/16	16:06	0.0032
10/31/16	16:07	0.0032
10/31/16	16:08	0.0032
10/31/16	16:09	0.0031
10/31/16	16:10	0.0030
10/31/16	16:11	0.0030
10/31/16	16:12	0.0030
10/31/16	16:13	0.0031
10/31/16	16:14	0.0031
10/31/16	16:15	0.0031
10/31/16	16:16	0.0031
10/31/16	16:17	0.0030
10/31/16	16:18	0.0030

NOx lb/mmbtu
0.0032

F = Unit Offline
E = Exceedance
M = Maintenance
T = Out Of Control

C = Calibration
S = Substituted
*** = Suspect**
U = Startup

Report Generated: 11/01/16 14:20
Report Version 4.0
MONROE\

Average Data

Plant: MONROE ENERGY, LLC.
Interval: 1 Minute
Type: Block
Report Period: 10/31/2016 10:00 Through 10/31/2016
Time Online Criteria: 1 minute(s)

10/31/16	17:07	0.0030
10/31/16	17:08	0.0030
10/31/16	17:09	0.0030
10/31/16	17:10	0.0030
10/31/16	17:11	0.0030
10/31/16	17:12	0.0030
10/31/16	17:13	0.0031
10/31/16	17:14	0.0032
10/31/16	17:15	0.0031
10/31/16	17:16	0.0033
10/31/16	17:17	0.0033
10/31/16	17:18	0.0032
10/31/16	17:19	0.0031
10/31/16	17:20	0.0030
10/31/16	17:21	0.0030
10/31/16	17:22	0.0030
10/31/16	17:23	0.0029
10/31/16	17:24	0.0029
10/31/16	17:25	0.0029
10/31/16	17:26	0.0030
10/31/16	17:27	0.0030
10/31/16	17:28	0.0029
10/31/16	17:29	0.0029
10/31/16	17:30	0.0029
10/31/16	17:31	0.0029
10/31/16	17:32	0.0029
10/31/16	17:33	0.0030
10/31/16	17:34	0.0030
10/31/16	17:35	0.0030
10/31/16	17:36	0.0030
10/31/16	17:37	0.0030
10/31/16	17:38	0.0029
10/31/16	17:39	0.0028
10/31/16	17:40	0.0028
10/31/16	17:41	0.0028
10/31/16	17:42	0.0028
10/31/16	17:43	0.0028
10/31/16	17:44	0.0028
10/31/16	17:45	0.0029
10/31/16	17:46	0.0029
10/31/16	17:47	0.0029
10/31/16	17:48	0.0029
10/31/16	17:49	0.0029
10/31/16	17:50	0.0029
10/31/16	17:51	0.0029
10/31/16	17:52	0.0028
10/31/16	17:53	0.0028
10/31/16	17:54	0.0029

F = Unit Offline
E = Exceedance
M = Maintenance
T = Out Of Control

C = Calibration
S = Substituted
* = Suspect
U = Startup

Report Generated: 11/01/16 14:20

Report Version 4.0
MONROE\

Average Data

Plant: MONROE ENERGY, LLC.
Interval: 1 Minute
Type: Block
Report Period: 10/31/2016 10:00 Through 10/31/2016
Time Online Criteria: 1 minute(s)

10/31/16	18:43	0.0024
10/31/16	18:44	0.0024
10/31/16	18:45	0.0024
10/31/16	18:46	0.0024
10/31/16	18:47	0.0024
10/31/16	18:48	0.0024
10/31/16	18:49	0.0024
10/31/16	18:50	0.0025
10/31/16	18:51	0.0025
10/31/16	18:52	0.0025
10/31/16	18:53	0.0025
10/31/16	18:54	0.0026
10/31/16	18:55	0.0027
10/31/16	18:56	0.0027
10/31/16	18:57	0.0027
10/31/16	18:58	0.0027
10/31/16	18:59	0.0027
10/31/16	19:00	0.0026

NOx lb/mmbtu
0.0026

Average	0.0029
Minimum	0.0024
Maximum	0.0034
Summation	1.5853
Included Data Points	540
Total number of Data Points	540

F = Unit Offline
E = Exceedance
M = Maintenance
T = Out Of Control

C = Calibration
S = Substituted
*** = Suspect**
U = Startup

Report Generated: 11/01/16 14:20

Report Version 4.0
MONROE\

Facility Monroe Energy, LLC
Source: Boiler 14
Location: Trainer, PA
Date: 11/01/16
Parameter: O_2 %

Data Acquisition System Accuracy Check

Date	Run	Start	Stop	Manual Calculations	DAS Calculations	Difference (Xi)
11/01/16	1	10:00	11:00	7.49	7.49	0.00
11/01/16	2	11:00	12:00	7.30	7.30	0.00
11/01/16	3	12:00	13:00	7.43	7.43	0.00
11/01/16	4	13:00	14:00	7.52	7.51	0.01
11/01/16	5	14:00	15:00	7.79	7.78	0.01
11/01/16	6	15:00	16:00	7.89	7.89	0.00
11/01/16	7	16:00	17:00	7.78	7.78	0.00
11/01/16	8	17:00	18:00	7.71	7.71	0.00
11/01/16	9	18:00	19:00	7.66	7.65	0.01
Mean				**7.62**	**7.62**	**0.00**

Average Data

Plant: MONROE ENERGY, LLC.
Interval: 1 Minute
Type: Roll
Report Period: 10/31/2016 10:00 Through 10/31/2016 17:59
Time Online Criteria: 1 minute(s)

Source		BOILER14	
Parameter		NOXPPM	O2
Unit		(PPM)	(PERCENT)
10/31/16	10:00	1.70	7.63
10/31/16	10:01	1.69	7.67
10/31/16	10:02	1.76	7.65
10/31/16	10:03	1.74	7.64
10/31/16	10:04	1.71	7.62
10/31/16	10:05	1.74	7.59
10/31/16	10:06	1.74	7.62
10/31/16	10:07	1.74	7.59
10/31/16	10:08	1.72	7.68
10/31/16	10:09	1.76	7.72
10/31/16	10:10	1.74	7.68
10/31/16	10:11	1.74	7.65
10/31/16	10:12	1.74	7.64
10/31/16	10:13	1.76	7.60
10/31/16	10:14	1.75	7.59
10/31/16	10:15	1.72	7.61
10/31/16	10:16	1.77	7.58
10/31/16	10:17	1.79	7.54
10/31/16	10:18	1.73	7.56
10/31/16	10:19	1.79	7.58
10/31/16	10:20	1.71	7.53
10/31/16	10:21	1.72	7.42
10/31/16	10:22	1.70	7.47
10/31/16	10:23	1.67	7.51
10/31/16	10:24	1.67	7.49
10/31/16	10:25	1.69	7.47
10/31/16	10:26	1.66	7.21
10/31/16	10:27	1.75	7.26
10/31/16	10:28	1.71	7.46
10/31/16	10:29	1.74	7.58
10/31/16	10:30	1.76	7.43
10/31/16	10:31	1.78	7.24
10/31/16	10:32	1.78	7.36
10/31/16	10:33	1.80	7.46
10/31/16	10:34	1.74	7.51
10/31/16	10:35	1.76	7.51
10/31/16	10:36	1.76	7.57
10/31/16	10:37	1.73	7.43
10/31/16	10:38	1.76	7.43
10/31/16	10:39	1.75	7.49
10/31/16	10:40	1.71	7.54
10/31/16	10:41	1.75	7.56
10/31/16	10:42	1.78	7.55

F = Unit Offline
E = Exceedance
M = Maintenance
T = Out Of Control

C = Calibration
S = Substituted
* = Suspect
U = Startup

Report Generated: 11/01/16 10:14

Report Version 4.0
MONROE\

Average Data

Plant: MONROE ENERGY, LLC.
Interval: 1 Minute
Type: Roll
Report Period: 10/31/2016 10:00 Through 10/31/2016 17:59
Time Online Criteria: 1 minute(s)

10/31/16	11:31	1.74	7.01
10/31/16	11:32	1.78	6.91
10/31/16	11:33	1.76	6.98
10/31/16	11:34	1.78	7.19
10/31/16	11:35	1.84	7.17
10/31/16	11:36	1.75	7.03
10/31/16	11:37	1.78	6.96
10/31/16	11:38	1.75	7.02
10/31/16	11:39	1.77	7.05
10/31/16	11:40	1.79	7.04
10/31/16	11:41	1.77	7.30
10/31/16	11:42	1.73	7.51
10/31/16	11:43	1.81	7.32
10/31/16	11:44	1.73	7.00
10/31/16	11:45	1.75	7.32
10/31/16	11:46	1.79	7.49
10/31/16	11:47	1.80	7.48
10/31/16	11:48	1.76	7.41
10/31/16	11:49	1.83	7.44
10/31/16	11:50	1.85	7.47
10/31/16	11:51	1.79	7.61
10/31/16	11:52	1.76	7.67
10/31/16	11:53	1.80	7.68
10/31/16	11:54	1.86	7.69
10/31/16	11:55	1.82	7.68
10/31/16	11:56	1.83	7.59
10/31/16	11:57	1.87	7.50
10/31/16	11:58	1.79	7.53
10/31/16	11:59	1.89	7.57
10/31/16	12:00	1.81	7.49
10/31/16	12:01	1.86	7.46
10/31/16	12:02	1.86	7.54
10/31/16	12:03	1.85	7.53
10/31/16	12:04	1.85	7.50
10/31/16	12:05	1.85	7.53
10/31/16	12:06	1.83	7.50
10/31/16	12:07	1.89	7.52
10/31/16	12:08	1.93	7.50
10/31/16	12:09	1.86	7.43
10/31/16	12:10	1.83	7.23
10/31/16	12:11	1.81	6.98
10/31/16	12:12	1.79	7.00
10/31/16	12:13	1.77	7.19
10/31/16	12:14	1.86	7.29
10/31/16	12:15	1.85	7.30
10/31/16	12:16	1.84	7.40
10/31/16	12:17	1.81	7.71
10/31/16	12:18	1.83	7.76

Nox	O2
1.78	**7.30**

F = Unit Offline
E = Exceedance
M = Maintenance
T = Out Of Control

C = Calibration
S = Substituted
*** = Suspect**
U = Startup

Report Generated: 11/01/16 10:14
Report Version 4.0
MONROE\

Average Data

Plant: MONROE ENERGY, LLC.
Interval: 1 Minute
Type: Roll
Report Period: 10/31/2016 10:00 Through 10/31/2016 17:59
Time Online Criteria: 1 minute(s)

10/31/16	13:07	1.83	7.03
10/31/16	13:08	1.83	7.05
10/31/16	13:09	1.81	7.06
10/31/16	13:10	1.76	6.94
10/31/16	13:11	1.87	7.29
10/31/16	13:12	1.82	7.55
10/31/16	13:13	1.87	7.65
10/31/16	13:14	1.84	7.42
10/31/16	13:15	1.90	7.37
10/31/16	13:16	1.90	7.43
10/31/16	13:17	1.88	7.48
10/31/16	13:18	1.84	7.52
10/31/16	13:19	1.93	7.60
10/31/16	13:20	1.85	7.59
10/31/16	13:21	1.90	7.48
10/31/16	13:22	1.86	7.48
10/31/16	13:23	1.84	7.53
10/31/16	13:24	1.85	7.65
10/31/16	13:25	1.85	7.62
10/31/16	13:26	1.83	7.56
10/31/16	13:27	1.87	7.58
10/31/16	13:28	1.82	7.59
10/31/16	13:29	1.82	7.51
10/31/16	13:30	1.90	7.57
10/31/16	13:31	1.92	7.60
10/31/16	13:32	1.88	7.63
10/31/16	13:33	1.91	7.67
10/31/16	13:34	1.86	7.67
10/31/16	13:35	1.86	7.42
10/31/16	13:36	1.76	7.26
10/31/16	13:37	1.81	7.98
10/31/16	13:38	1.94	7.75
10/31/16	13:39	1.84	7.28
10/31/16	13:40	1.74	7.63
10/31/16	13:41	1.85	7.85
10/31/16	13:42	1.76	7.30
10/31/16	13:43	1.79	7.63
10/31/16	13:44	1.78	7.85
10/31/16	13:45	1.85	7.82
10/31/16	13:46	1.86	7.69
10/31/16	13:47	1.80	7.72
10/31/16	13:48	1.85	7.72
10/31/16	13:49	1.82	7.38
10/31/16	13:50	1.83	7.62
10/31/16	13:51	1.85	7.99
10/31/16	13:52	1.78	7.90
10/31/16	13:53	1.82	7.67
10/31/16	13:54	1.87	7.68

F = Unit Offline
E = Exceedance
M = Maintenance
T = Out Of Control

C = Calibration
S = Substituted
* = Suspect
U = Startup

Report Generated: 11/01/16 10:14
Report Version 4.0
MONROE\

Average Data

Plant: MONROE ENERGY, LLC.
Interval: 1 Minute
Type: Roll
Report Period: 10/31/2016 10:00 Through 10/31/2016 17:59
Time Online Criteria: 1 minute(s)

10/31/16	14:43	1.90	8.01
10/31/16	14:44	1.92	7.95
10/31/16	14:45	1.87	7.88
10/31/16	14:46	1.90	7.85
10/31/16	14:47	1.91	7.84
10/31/16	14:48	1.87	7.73
10/31/16	14:49	1.91	7.78
10/31/16	14:50	1.91	7.85
10/31/16	14:51	1.87	7.95
10/31/16	14:52	1.93	8.04
10/31/16	14:53	1.88	7.77
10/31/16	14:54	1.76	7.20
10/31/16	14:55	1.83	7.47
10/31/16	14:56	1.84	7.85
10/31/16	14:57	1.84	7.98
10/31/16	14:58	1.81	8.03
10/31/16	14:59	1.84	7.95
10/31/16	15:00	1.86	8.00
10/31/16	15:01	1.81	8.10
10/31/16	15:02	1.87	8.10
10/31/16	15:03	1.88	8.11
10/31/16	15:04	1.89	8.09
10/31/16	15:05	1.89	7.99
10/31/16	15:06	1.88	8.05
10/31/16	15:07	1.86	8.18
10/31/16	15:08	1.84	8.15
10/31/16	15:09	1.86	7.81
10/31/16	15:10	1.87	7.74
10/31/16	15:11	1.90	8.21
10/31/16	15:12	1.99	8.20
10/31/16	15:13	1.91	7.74
10/31/16	15:14	1.96	7.86
10/31/16	15:15	1.93	8.02
10/31/16	15:16	1.89	8.00
10/31/16	15:17	1.90	7.99
10/31/16	15:18	1.93	7.74
10/31/16	15:19	1.95	7.67
10/31/16	15:20	1.90	7.45
10/31/16	15:21	1.86	7.37
10/31/16	15:22	1.95	7.66
10/31/16	15:23	1.87	7.72
10/31/16	15:24	1.86	7.70
10/31/16	15:25	1.86	7.72
10/31/16	15:26	1.84	7.72
10/31/16	15:27	1.88	7.77
10/31/16	15:28	1.85	7.77
10/31/16	15:29	1.87	8.01
10/31/16	15:30	1.88	8.12

Nox	O2
1.93	**7.79**

F = Unit Offline
E = Exceedance
M = Maintenance
T = Out Of Control

C = Calibration
S = Substituted
*** = Suspect**
U = Startup

Report Generated: 11/01/16 10:14
Report Version 4.0
MONROE\

Average Data

Plant: MONROE ENERGY, LLC.
Interval: 1 Minute
Type: Roll
Report Period: 10/31/2016 10:00 Through 10/31/2016 17:59
Time Online Criteria: 1 minute(s)

10/31/16	16:19	1.81	7.87
10/31/16	16:20	1.80	7.75
10/31/16	16:21	1.83	7.64
10/31/16	16:22	1.85	7.69
10/31/16	16:23	1.87	7.73
10/31/16	16:24	1.89	7.72
10/31/16	16:25	1.89	7.77
10/31/16	16:26	1.88	7.81
10/31/16	16:27	1.96	7.82
10/31/16	16:28	1.90	7.91
10/31/16	16:29	1.86	7.99
10/31/16	16:30	1.88	7.85
10/31/16	16:31	1.94	7.76
10/31/16	16:32	1.91	7.71
10/31/16	16:33	1.87	7.81
10/31/16	16:34	1.88	7.67
10/31/16	16:35	1.87	7.65
10/31/16	16:36	1.90	7.76
10/31/16	16:37	1.93	7.70
10/31/16	16:38	1.94	7.70
10/31/16	16:39	1.85	7.75
10/31/16	16:40	1.83	7.78
10/31/16	16:41	1.84	7.77
10/31/16	16:42	1.83	7.74
10/31/16	16:43	1.81	7.68
10/31/16	16:44	1.83	7.63
10/31/16	16:45	1.86	7.63
10/31/16	16:46	1.79	7.59
10/31/16	16:47	1.76	7.66
10/31/16	16:48	1.75	7.73
10/31/16	16:49	1.74	7.64
10/31/16	16:50	1.73	7.67
10/31/16	16:51	1.73	7.66
10/31/16	16:52	1.74	7.73
10/31/16	16:53	1.74	7.74
10/31/16	16:54	1.73	7.77
10/31/16	16:55	1.75	7.77
10/31/16	16:56	1.78	7.70
10/31/16	16:57	1.77	7.65
10/31/16	16:58	1.75	7.75
10/31/16	16:59	1.76	7.85
10/31/16	17:00	1.76	7.86
10/31/16	17:01	1.79	7.90
10/31/16	17:02	1.77	7.88
10/31/16	17:03	1.81	7.85
10/31/16	17:04	1.89	7.79
10/31/16	17:05	1.81	7.88
10/31/16	17:06	1.83	7.89

Nox	O2
1.85	**7.78**

F = Unit Offline
E = Exceedance
M = Maintenance
T = Out Of Control

C = Calibration
S = Substituted
*** = Suspect**
U = Startup

Report Generated: 11/01/16 10:14
Report Version 4.0
MONROE\

Average Data

Plant: MONROE ENERGY, LLC.
Interval: 1 Minute
Type: Roll
Report Period: 10/31/2016 10:00 Through 10/31/2016 17:59
Time Online Criteria: 1 minute(s)

10/31/16	17:55	1.76	7.70
10/31/16	17:56	1.75	7.66
10/31/16	17:57	1.74	7.62
10/31/16	17:58	1.74	7.61
10/31/16	17:59	1.73	7.64
10/31/16	18:00	1.77	7.68
10/31/16	18:01	1.78	7.73
10/31/16	18:02	1.76	7.76
10/31/16	18:03	1.76	7.72
10/31/16	18:04	1.80	7.59
10/31/16	18:05	1.78	7.61
10/31/16	18:06	1.76	7.65
10/31/16	18:07	1.76	7.68
10/31/16	18:08	1.80	7.56
10/31/16	18:09	1.79	7.41
10/31/16	18:10	1.71	7.50
10/31/16	18:12	1.70	7.48
10/31/16	18:13	1.70	7.35
10/31/16	18:14	1.67	7.40
10/31/16	18:15	1.66	7.44
10/31/16	18:16	1.66	7.45
10/31/16	18:17	1.65	7.45
10/31/16	18:18	1.63	7.35
10/31/16	18:19	1.64	7.36
10/31/16	18:20	1.66	7.44
10/31/16	18:21	1.65	7.47
10/31/16	18:22	1.65	7.59
10/31/16	18:23	1.62	7.63
10/31/16	18:24	1.63	7.45
10/31/16	18:25	1.63	7.38
10/31/16	18:26	1.63	7.49
10/31/16	18:27	1.63	7.51
10/31/16	18:28	1.63	7.45
10/31/16	18:29	1.62	7.42
10/31/16	18:30	1.62	7.46
10/31/16	18:31	1.62	7.49
10/31/16	18:32	1.63	7.48
10/31/16	18:33	1.59	7.50
10/31/16	18:34	1.56	7.51
10/31/16	18:35	1.55	7.51
10/31/16	18:36	1.51	7.44
10/31/16	18:37	1.48	7.52
10/31/16	18:38	1.50	7.60
10/31/16	18:39	1.49	7.69
10/31/16	18:40	1.46	7.80
10/31/16	18:41	1.45	7.87
10/31/16	18:42	1.46	7.84
10/31/16	18:43	1.46	7.88

Nox	O2
1.82	**7.71**

F = Unit Offline
E = Exceedance
M = Maintenance
T = Out Of Control

C = Calibration
S = Substituted
*** = Suspect**
U = Startup

Report Generated: 11/01/16 10:14
Report Version 4.0
MONROE\

Average Data

Plant: MONROE ENERGY, LLC.
Interval: 1 Minute
Type: Roll
Report Period: 10/31/2016 10:00 Through 10/31/2016 17:59
Time Online Critèria: 1 minute(s)

10/31/16	19:32	1.61	7.96
10/31/16	19:33	1.64	7.95
10/31/16	19:34	1.61	7.87
10/31/16	19:35	1.61	7.85
10/31/16	19:36	1.61	7.87
10/31/16	19:37	1.65	7.86
10/31/16	19:38	1.65	7.82
10/31/16	19:39	1.61	7.71
10/31/16	19:40	1.59	7.74
10/31/16	19:41	1.64	7.82
10/31/16	19:42	1.65	7.81
10/31/16	19:43	1.65	7.89
10/31/16	19:44	1.65	7.94
10/31/16	19:45	1.68	7.92
10/31/16	19:46	1.66	7.87
10/31/16	19:47	1.65	7.86
10/31/16	19:48	1.66	7.85
10/31/16	19:49	1.67	7.79
10/31/16	19:50	1.67	7.84
10/31/16	19:51	1.66	7.84
10/31/16	19:52	1.65	7.88
10/31/16	19:53	1.66	7.85
10/31/16	19:54	1.65	7.82
10/31/16	19:55	1.64	7.89
10/31/16	19:56	1.67	7.86
10/31/16	19:57	1.67	7.92
10/31/16	19:58	1.69	7.98
10/31/16	19:59	1.70	8.02

Average	1.80	7.64
Minimum	1.44	6.86
Maximum	2.07	8.21
Summation	1,080.25	4,583.29
Included Data Points	600	600
Total number of Data	600	600

F = Unit Offline
E = Exceedance
M = Maintenance
T = Out Of Control

C = Calibration
S = Substituted
* = Suspect
U = Startup

Report Generated: 11/01/16 10:14
Report Version 4.0
MONROE\

Plant Name	Monroe Energy	Plant Rep.	Steve Brady	Analyzer Span Value	
Sampling Location	Boiler No. 14	Team Leader	Chad Walker	CO_2	21.95 %
Date	11/2/2016	CEM Operator	Chad Walker		

Run Number: **RA-1** Start Time: 7:23 hrs End Time: 7:44 hrs

	CALIBRATION ERROR - 6:45 hrs				SYSTEM BIAS CHECK					Calibration Correction Factors
					Pretest: 7:13		Posttest: 7:45 hrs			
	Cylinder Value (% or ppm)	Cylinder Number	Analyzer Calibration Response	Difference (% of Span)	System Response	Syst. Bias (% of Span)	System Response	Syst. Bias (% of Span)	Drift % of Span	
O_2 Zero	0.00	CC273913	0.01	0.0	0.05	0.2	0.05	0.2	0.0	Co=
O_2 Low		O_2/N_2								**0.05**
O_2 Mid	12.48	CC72181	12.54	0.3	12.47	-0.3	12.44	-0.4	-0.1	Cm=
O_2 High	21.95	CC250861	21.95	0.0						**12.45**

Run Number: **2**
Start Time: 7:54
End Time: 8:15

Pretest: 7:45 hrs Posttest: 8:16 hrs

O_2 Zero	0.01	0.05	0.2	0.04	0.2	0.0	Co=
O_2 Low							**0.04**
O_2 Mid	12.54	12.44	-0.4	12.43	-0.5	0.0	Cm=
O_2 High	21.95						**12.44**

Run Number: **RA-3**
Start Time: 8:24
End Time: 8:45

Pretest: 8:16 hrs Posttest: 8:46 hrs

O_2 Zero	0.01	0.04	0.2	0.05	0.2	0.0	Co=
O_2 Low							**0.05**
O_2 Mid	12.54	12.43	-0.5	12.43	-0.5	0.0	Cm=
O_2 High	21.95						**12.43**

Run Number: **RA-4**
Start Time: 9:06
End Time: 9:27

Pretest: 8:46 hrs Posttest: 9:29 hrs

O_2 Zero	0.01	0.05	0.2	0.04	0.1	-0.1	Co=
O_2 Low							**0.04**
O_2 Mid	12.54	12.43	-0.5	12.43	-0.5	0.0	Cm=
O_2 High	21.95						**12.43**

Run Number: **RA-5**
Start Time: 9:37
End Time: 9:58

Pretest: 9:29 hrs Posttest: 9:59 hrs

O_2 Zero	0.01	0.04	0.1	0.04	0.2	0.0	Co=
O_2 Low							**0.039**
O_2 Mid	12.54	12.43	-0.5	12.42	-0.5	0.0	Cm=
O_2 High	21.95						**12.424**

Run Number: **RA-6**
Start Time: 10:07
End Time: 10:28

Pretest: 9:59 hrs Posttest: 10:31 hrs

O_2 Zero	0.01	0.04	0.2	0.04	0.2	0.0	Co=
O_2 Low							**0.042**
O_2 Mid	12.54	12.42	-0.5	12.42	-0.5	0.0	Cm=
O_2 High	21.95						**12.418**

Run Number: **RA-7**
Start Time: 10:39
End Time: 11:00

Pretest: 10:31 hrs Posttest: 11:02 hrs

O_2 Zero	0.01	0.04	0.2	0.04	0.2	0.0	Co=
O_2 Low							**0.042**
O_2 Mid	12.54	12.42	-0.5	12.41	-0.6	0.0	Cm=
O_2 High	21.95						**12.414**

Run Number: **RA-8**
Start Time: 11:10
End Time: 11:31

Pretest: 11:02 hrs Posttest: 11:32 hrs

O_2 Zero	0.01	0.04	0.2	0.03	0.1	-0.1	Co=
O_2 Low							**0.035**
O_2 Mid	12.54	12.41	-0.6	12.40	-0.6	-0.1	Cm=
O_2 High	21.95						**12.405**

Run Number: **RA-9**
Start Time: 11:43
End Time: 12:04

Pretest: 11:32 hrs Posttest: 12:06 hrs

O_2 Zero	0.01	0.03	0.1	0.03	0.1	0.0	Co=
O_2 Low							**0.032**
O_2 Mid	12.54	12.40	-0.6	12.39	-0.7	0.0	Cm=
O_2 High	21.95						**12.396**

Run Number: **RA-10**
Start Time: 12:15
End Time: 12:36

Pretest: 12:06 hrs Posttest: 12:39 hrs

O_2 Zero	0.01	0.03	0.1	0.04	0.2	0.0	Co=
O_2 Low							**0.039**
O_2 Mid	12.54	12.39	-0.7	12.39	-0.7	0.0	Cm=
O_2 High	21.95						**12.391**

RESPONSE TIME AND CONVERSION EFFICIENCY

Company:	Monroe Energy
Location	Trainer, PA
Source:	Boiler No. 14
Test Date:	11/02/16

RESPONSE TIME CHECK

Component	Upscale Response (seconds)	Downscale Response (seconds)
O_2	75	60
NO_x	60	75

System Response Time = **75** **seconds**

NO2 to NO CONVERSION EFFICIENCY CHECK

Date	Expected	Measured	Efficiency, %
11/02/16	48.21	43.88	91.0

Must be ≥ 90 % Efficiency = **Pass**

Method 7E-Interfernce Response

Date of Test: 1/26/2011
Analyzer Type: CLD
Model: 600/650
Serial Numer: U09016
Calibration Span: 100ppm NO/balance N2

Test Gas	Interfernt Concentration	Zero Response	Span Response	Interferent Response
CO2	16.12%	0.03ppm	1.12ppm	1.12 ppm
H2O	0.82%	0.00ppm	0.3ppm	0.30 ppm
N2O	10ppm	0.00ppm	0.035ppm	0.035 ppm
SO2	101ppm	0.145ppm	0.255ppm	0.255 ppm
CO	45ppm	0.00ppm	0.20ppm	0.20 ppm
CH4	90.9ppm	0.00ppm	0.05ppm	0.05 ppm
HCl	27.99ppm	0.00ppm	0.10ppm	0.10 ppm
Sum of Responses				2.06
% of Calibration Span				2.06%

Airgas

Airgas USA, LLC
Airgas Specialty Gases
600 Union Landing Rd.
Cinnaminson , NJ 08077
856-829-7878 Fax: 856-829-6576
Airgas.com

CERTIFICATE OF ANALYSIS

Grade of Product: EPA Protocol

Part Number:	E03NI56E15A1055	Reference Number:	82-124560709-1
Cylinder Number:	CC250861	Cylinder Volume:	161.7 CF
Laboratory:	ASG - Riverton - NJ	Cylinder Pressure:	2015 PSIG
PGVP Number:	B52016	Valve Outlet:	590
Gas Code:	CO2,O2,BALN	Certification Date:	Jun 21, 2016

Expiration Date: Jun 21, 2024

Certification performed in accordance with "EPA Traceability Protocol for Assay and Certification of Gaseous Calibration Standards (May 2012)" document EPA 600/R-12/531, using the assay procedures listed. Analytical Methodology does not require correction for analytical interference. This cylinder has a total analytical uncertainty as stated below with a confidence level of 95%. There are no significant impurities which affect the use of this calibration mixture. All concentrations are on a volume/volume basis unless otherwise noted.

Do Not Use This Cylinder below 100 psig, i.e. 0.7 megapascals.

ANALYTICAL RESULTS

Component	Requested Concentration	Actual Concentration	Protocol Method	Total Relative Uncertainty	Assay Dates
CARBON DIOXIDE	22.00 %	21.62 %	G1	+/- 0.7% NIST Traceable	06/21/2016
OXYGEN	22.00 %	21.95 %	G1	+/- 0.5% NIST Traceable	06/21/2016
NITROGEN	Balance				

CALIBRATION STANDARDS

Type	Lot ID	Cylinder No	Concentration	Uncertainty	Expiration Date
NTRM	13060819	CC417106	24.04 % CARBON DIOXIDE/NITROGEN	+/- 0.6%	May 16, 2019
NTRMplus	09061404	CC267783	22.53 % OXYGEN/NITROGEN	+/- 0.4%	Mar 08, 2019

ANALYTICAL EQUIPMENT

Instrument/Make/Model	Analytical Principle	Last Multipoint Calibration
Horiba VIA 510-CO2-LDH9LRNS	NDIR	May 26, 2016
Horiba MPA 510-O2-7TWMJ041	Paramagnetic	May 26, 2016

Triad Data Available Upon Request

Approved for Release

PRAXAIR

Praxair Distribution, Inc.
6055 Brent Drive
Toledo, OH 43611
Tel (419) 729-7732 Fax (419) 729-2411
PGVP ID FI2016

DocNumber: 000015082

CERTIFICATE OF ANALYSIS / EPA PROTOCOL GAS

Customer & Order Information:

PRAXAIR PKG HILLSIDE IL HS
12000 ROOSEVELT RD
HILLSIDE IL 60162

Praxair Order Number: 70058727
Customer P. O. Number
Customer Reference Number

Fill Date 4/15/2016
Part Number NI NO25ME-AS
Lot Number 0415G116
Cylinder Style & Outlet AS CGA 660
Cylinder Pressure & Volume 2000 psig 140 cu ft

Certified Concentration:

Expiration Date: 5/3/2019
Cylinder Number: EB0079375

25.2 ppm NITRIC OXIDE
Balance NITROGEN

NIST Traceable
Analytical Uncertainty.
± 0.6 %

NOx = 25.4 ppm

NOx for Reference Only

Certification Information: *Certification Date:* 5/3/2016 *Term:* 36 Months *Expiration Date:* 5/3/2019
This cylinder was certified according to the 2012 EPA Traceability Protocol, Document #EPA-600/R-12/531, using Procedure G1.
Do Not Use this Standard if Pressure is less than 100 PSIG.

Analytical Data: *(R=Reference Standard, Z=Zero Gas, C=Gas Candidate)*

1. Component: NITRIC OXIDE

Requested Concentration 25 ppm
Certified Concentration: 25.2 ppm
Instrument Used. Rosemount 951A
Analytical Method Chemiluminescence
Last Multipoint Calibration 4/15/2016

Reference Standard Type GMIS
Ref Std Cylinder # CC103138
Ref Std Conc: 48.4 ppm
Ref Std Traceable to SRM # 1683b
SRM Sample # 44-T-25
SRM Cylinder # FF9283

First Analysis Data: Date: 4/26/2016

Z:	0	R:	48.6	C:	25.5	Conc:	25.326
R:	48.7	Z:	0	C:	25.4	Conc:	25.226
Z:	0	C:	25.4	R:	48.7	Conc:	25.226

UOM: PPM
Mean Test Assay: 25.259 PPM

Second Analysis Data: Date: 5/3/2016

Z:	0	R:	48.7	C:	25.4	Conc:	25.261
R:	48.6	Z:	0	C:	25.3	Conc:	25.161
Z:	0	C:	25.4	R:	48.7	Conc:	25.261

UOM: PPM
Mean Test Assay: 25.2[illegible]0 PPM

Analyzed by: Edward E Z[illegible]

Certified by: Rol[illegible]da Kaywood

Information contained herein has been prepared at your request by qualified experts within Praxair Distribution, Inc. While we believe that the information is accurate within the limits of the analytical methods employed and is complete to the extent of the specific analyses performed, we make no warranty or representation as to the suitability of the use of the information for any purpose. The information is offered with the understanding that any use of the information is at the sole discretion and risk of the user. In no event shall the liability of Praxair Distribution, Inc. arising out of the use of the information contained herein exceed the fee established for providing such information.

APPENDIX F

Test Program Qualifications

SOURCE EVALUATION SOCIETY

Qualified Source Testing Individual

LET IT BE KNOWN THAT

CHAD S. WALKER

HAS SUCCESSFULLY PASSED A COMPREHENSIVE EXAMINATION AND SATISFIED EXPERIENCE REQUIREMENTS IN ACCORDANCE WITH THE GUIDELINES ISSUED BY THE SES QUALIFIED SOURCE TEST INDIVIDUAL REVIEW BOARD FOR

MANUAL GASEOUS POLLUTANTS SOURCE SAMPLING METHODS

ISSUED THIS 29TH DAY OF AUGUST 2012 AND EFFECTIVE UNTIL AUGUST 28TH, 2017

Peter R. Westlin, QSTI/QSTO Review Board

Peter S. Pakalnis, QSTI/QSTO Review Board

LeRoy Owens, QSTI/QSTO Review Board

C. David Bagwell, QSTI/QSTO Review Board

Karen D. Kajiya-Mills , QSTI/QSTO Review Board

Glenn C. England, QSTI/QSTO Review Board

APPLICATION NO. 2008-206

SOURCE EVALUATION SOCIETY

Qualified Source Testing Individual

LET IT BE KNOWN THAT

CHAD S. WALKER

HAS SUCCESSFULLY PASSED A COMPREHENSIVE EXAMINATION AND SATISFIED EXPERIENCE REQUIREMENTS IN ACCORDANCE WITH THE GUIDELINES ISSUED BY THE SES QUALIFIED SOURCE TEST INDIVIDUAL REVIEW BOARD FOR

HAZARDOUS METALS MEASUREMENT SAMPLING METHODS

ISSUED THIS 29TH DAY OF APRIL 2016 AND EFFECTIVE UNTIL APRIL 28TH, 2021

Peter R. Westlin, QSTI/QSTO Review Board

C. David Bagwell, QSTI/QSTO Review Board

Peter S. Pakalnis, QSTI/QSTO Review Board

Karen D. Kajiya-Mills, QSTI/QSTO Review Board

Theresa Lowe, QSTI/QSTO Review Board

Bruce Randall, QSTI/QSTO Review Board

CERTIFICATE
NO.
2008-206

SOURCE EVALUATION SOCIETY

Qualified Source Testing Observer

LET IT BE KNOWN THAT

HENRY M. TAYLOR

HAS SUCCESSFULLY PASSED A COMPREHENSIVE EXAMINATION AND SATISFIED EXPERIENCE REQUIREMENTS IN ACCORDANCE WITH THE GUIDELINES ISSUED BY THE SES QUALIFIED SOURCE TEST OBSERVER REVIEW BOARD FOR

MANUAL GAS VOLUME MEASUREMENTS AND ISOKINETIC PARTICULATE SAMPLING METHODS

ISSUED THIS 13TH DAY OF DECEMBER 2014 AND EFFECTIVE UNTIL DECEMBER 12TH, 2019

Peter R. Westlin, QSTI/QSTO Review Board

C. David Bagwell, QSTI/QSTO Review Board

Peter S. Pakainis, QSTI/QSTO Review Board

Karen D. Kajiya-Mills , QSTI/QSTO Review Board

Theresa Lowe, QSTI/QSTO Review Board

Glenn C. England, QSTI/QSTO Review Board

CERTIFICATE
NO.
2015-872

SOURCE EVALUATION SOCIETY

Qualified Source Testing Observer

LET IT BE KNOWN THAT

HENRY M. TAYLOR

HAS SUCCESSFULLY PASSED A COMPREHENSIVE EXAMINATION AND SATISFIED EXPERIENCE REQUIREMENTS IN ACCORDANCE WITH THE GUIDELINES ISSUED BY THE SES QUALIFIED SOURCE TEST OBSERVER REVIEW BOARD FOR

GASEOUS POLLUTANTS INSTRUMENTAL SAMPLING METHODS

ISSUED THIS 21ST DAY OF JULY 2012 AND EFFECTIVE UNTIL JULY 20TH, 2017

Peter R. Westlin, QSTI/QSTO Review Board

C. David Bagwell, QSTI/QSTO Review Board

Peter S. Pakalnis, QSTI/QSTO Review Board

Karen D. Kajiya-Mills , QSTI/QSTO Review Board

Theresa Lowe, QSTI/QSTO Review Board

Glenn C. England, QSTI/QSTO Review Board

CERTIFICATE
NO.
2015-872

OPERATORS WORK INSTRUCTION FOR ENTRY INTO FCC ASBESTOS REGULATED AREA

- Tyvek – 3 Suits with hood and boots over FRC's
- Rubber steel toe boots
- ½ Face Respirator w/ HEPA Filters
- Gloves (Inner Nitrile/Outer Work Glove)
- Hard Hat

PROCESS TO ENTER /EXIT REGULATED AREA:

1. In the shelter, remove clothing and suit up in asbestos PPE. Put ON: Inner Tyvek (thin see-through), FR Tyvek (Blue), then a Regular coated Tyvek with hood and rubber steel toe boots. These suits will be in the shelter for you.
2. Notify the RSL and co-workers that you will need them to bring your clothes and boots to the Clean side of the Decon trailer.
3. Don your Respirator with ½ face HEPA Filters and pull Tyvek hook over top of your head. Place on hard hat.
4. Go to Containment entrance nearest the valve you need to access. Use the entry doors made by the Asbestos workers. **DO NOT** cut an opening or make an entrance at a non-designated location.
5. If workers are inside, notify them when you arrive. Turn valve or perform work then exit the containment door.
6. With the respirator on, immediately after exiting the containment tent, remove outer layer of Tyvek and gloves and place in the Asbestos Trash bag. (There will be a trash bag at each entrance).
7. Keep respirator on you, **do not** remove.
8. Walk to the Decon Trailer and then enter the DIRTY DOOR (Chester Side).
9. Remove Tyvek and boots and place the Tyvek in the trash bag. Leave the boots on the dirty side. Enter the shower with the respirator still on.
10. Once you are clean, remove the respirator and drop on the dirty side of the Decon trailer.
11. Exit to the Clean Room and dry and dress in the CLEAN ROOM.

DECON TRAILER LAYOUT