Dominion Resource Services, Inc.
5000 Dominion Boulevard, Glen Allen, VA 23060
dom.com

CERTIFIED MAIL
RETURN RECEIPT REQUESTED

August 18, 2015

Ms. Susan Mackert
Virginia Department of Environmental Quality
Northern Regional Office
13901 Crown Court
Woodbridge, VA 22193

RE: Possum Point Power Station VPDES Permit No. VA0002071: Modification Request Letter

Dear Ms. Mackert:

As you know from our recent meetings, we are actively pursuing closure of the ash ponds at the Possum Point Power Station pursuant to EPA's final coal combustion residuals (CCR) rule. Some of the preparatory work for closure is already authorized and regulated under the Station's existing VPDES Permit No. VA0002071. Other preparatory work is subject to DEQ's concurrence as part of Dominion's Notice of Planned Changes, which was submitted in July 2015. For the active construction and post-construction phase of the closure project, Dominion will also need modifications to the VPDES permit. This letter, application, and supporting documents comprise a request that the VPDES Permit be modified as described below. The requested modifications will enable Dominion to properly handle the various waste streams associated with construction activities, as well as final conditions post-closure.

1. Present Situation
   - Ash Pond E is presently being decommissioned and the impoundment will be retired. Ash material in Pond E is being relocated to Ash Pond D. Ash Dewatering and Contact Waters are presently being directed to Ash Pond D for storage. Ash Pond E will be replaced with a treatment system, as required.
   - Ash Ponds A, B, and C are presently being decommissioned and the impoundment will be retired. Ash material in Ponds A, B and C is being relocated to Ash Pond D. Ash Dewatering and Contact Waters are presently being directed to Ash Pond D for storage.
   - Ash Pond D will be decommissioned and the impoundment retired. The ash material will be capped. Pond D Comingled Water, or surface waters in Ash Pond D, will need to be decanted, treated, as required, and discharged. After decanting, Ash Dewatering and Contact Waters at Ash Pond D will need to be treated and discharged.
2. Proposed Modifications Being Sought
   - Interim Configuration:
     - Oil Water Treatment Basin (Internal Outfall 502) will be rerouted to the station's existing Low Volume Settling Ponds (Outfall 004).
     - Ash Pond E will be replaced with an interim treatment system suitable to protect water quality and achieve any necessary water quality-based limits established by DEQ. However, should a Permit Modification be delayed beyond January 1, 2016, reclaimed Pond E may be used to store waters (after required treatment).

- Outfall 501 water will be directed to Ash Pond D (or Pond E should a Permit Modification be delayed beyond January 1, 2015) for storage and treated to protect water quality and achieve any necessary water quality-based limits established by DEQ before being discharged to Outfall 005 (or ALTERNATE discharge to Outfall 001/002 and/or Outfall 004).
- Pond D Comingled Water will be decanted, directed to an interim treatment system suitable to protect water quality and achieve any necessary water quality-based limits established by DEQ, and discharged to Outfall 005 (with ALTERNATE discharge to Outfall 001/002 and/or Outfall 004). However, should a Permit Modification be delayed beyond January 1, 2016, Pond D Comingled Water will first be treated with a filtering system to remove coal combustion residuals (CCR) (ash) solids and held in reclaimed Pond E.
- Ash Dewatering and Contact Waters from the closure of Ash Pond A, B, C, and D will be directed to an interim treatment system and then discharged to Outfall 005 (with ALTERNATE discharge to Outfall 001/002 and/or Outfall 004). However, should a Permit Modification be delayed beyond January 1, 2016, Ash Dewatering and Contact Waters will first be treated with a filtering system to remove coal combustion residuals (CCR) (ash) solids and held in reclaimed Pond E.

- Final Configuration:
  - Oil Water Treatment Basin (Internal Outfall 502) will be rerouted to the station's existing Low Volume Settling Ponds (Outfall 004).
  - A new treatment system that replaces closed Pond E, as required, will accept the Metals Cleaning Waste Treatment Facility (Internal Outfall 501) effluent, as well as Pond D Underdrainage from the closed/capped Ash Pond D.

3. Reasons for the Modification
   - Ash Ponds A, B, C, and E will be decommissioned and clean-closed in accordance with the final CCR rule.
   - Ash Pond D will be decommissioned and closed-in-place in accordance with the final CCR rule.

The permit fee required for this modification and the original fee form as well as the authorization to public notice the draft permit were submitted to DEQ, Receipts Control, P.O. Box 1104, Richmond, VA 23218, in June 2014 with the original request for modification of the permit.

Sincerely,

Cathy C. Taylor
Director, Electric Environmental Services

Enclosures:
1. Form 1 General.
2. Topographic Map.
3. Water Flow Balance Line Diagram –Interim Configuration.
4. Water Flow Balance Line Diagram – Final Configuration.
5. Form 2C NPDES, Page 1 – Interim Configuration.
6. Form 2C NPDES, Page 1 – Final Configuration.

7. Form 2C NPDES, Page 2 – Interim Configuration.
8. Form 2C NPDES, Page 2 – Final Configuration.
9. Form 2C NPDES, Pages 3 & 4.
10. Form 2C NPDES, Pages V-1 to V-9 – Outfall 004, Interim & Final Configuration.
11. Form 2C NPDES, Pages V-1 to V-9 – Outfall 005, Interim Configuration: Pond D Comingled Waters.
12. Form 2C NPDES, Pages V-1 to V-9 – Outfall 005, Interim Configuration: Ash Dewatering and Contact Waters.
13. Form 2C NPDES, Pages V-1 to V-9 – Outfall 005, Final Configuration.
14. Form 2C NPDES, Pages V-1 to V-9 – Outfall 501, Interim & Final Configuration.
15. Form 2C NPDES, Pages V-1 to V-9 – Outfall 502, Interim & Final Configuration.
16. Form 2C NPDES, Pages V-1 to V-9 – Outfall 004, ALTERNATE Interim Configuration: Pond D Comingled Water.
17. Form 2C NPDES, Pages V-1 to V-9 – Outfall 001/002, ALTERNATE Interim Configuration: Pond D Comingled Water.
18. Form 2C NPDES, Pages V-1 to V-9 – Outfall 004, ALTERNATE Interim Configuration: Ash Dewatering and Contact Waters.
19. Form 2C NPDES, Pages V-1 to V-9 – Outfall 001/002, ALTERNATE Interim Configuration: Ash Dewatering and Contact Waters.
20. VPDES Permit Modification Concept Report.

CERTIFICATION

I certify under penalty of law that this document and all attachments were prepared under my direction or supervision in accordance with a system designed to assure that qualified personnel properly gather and evaluate the information submitted. Based on my inquiry of the person or persons who manage the system or those persons directly responsible for gathering the information, the information submitted is, to the best of my knowledge and belief, true, accurate, and complete. I am aware that there are significant penalties for submitting false information, including the possibility of fine and imprisonment for knowing violations.

NAME: David A. Craymer

OFFICIAL TITLE Vice President, Power Generation System Operations

PHONE NO.: (804) 273-3685

SIGNATURE: [signature]

DATE SIGNED: 8/18/15

ebc: Pamela Faggert
David Craymer
John Smatlak
Cathy Taylor
Christine Harris
Frank Brayton
Jeff Heffelman
Geoffrey Hensley
Jason Williams
Mike Glagola
Doug Wight
Jeff Marcell
Clay Burns
Ken Roller
Dennis Slade
Oula Shehab-Dandan
Amelia Boschen

Documentum
File Name: PP Addendum to VPDES Permit Modification Application 17 June 2015
Environmental Program: Water NPDES
Document Type: Permit Applications

Permit Application Sign-Off Sheet

Project/Facility: **POSSUM POINT ASH POND CLOSURE PROJECT VPDES PERMIT MODIFICATOIN APPLICATION ADDENDUM**

Application/Permit Type:

The following Permit Team members participated in a comprehensive review of the subject permit application and agree that the application is ready for submittal to the applicable agency:

Ken Roller, Oula Shehab-Dandan, Doug Wight, Mike Glagola, Jeff Marcell, Legal (Clay Burns/Rick Linker)

On behalf of my organization, I agree that the application is accurate and inclusive and ready for submittal to the applicable permitting agency.

[Environmental]

Pamela Herrera — 8-17-2015

Executive or Designee Signature — Date

[Organization (Construction/Engineering]

John D Smith — 08-18-2015

Executive or Designee Signature — Date

[Organization (Operations)]

David A Campos — 8/18/15

Executive or Designee Signature — Date

Please print or type in the unshaded areas only.

Form Approved. OMB No. 2040-0086.

FORM 1 GENERAL

EPA

U.S. ENVIRONMENTAL PROTECTION AGENCY

GENERAL INFORMATION

Consolidated Permits Program

(Read the "General Instructions" before starting.)

I. EPA I.D. NUMBER

S		T/A	C
F	110000340774		D
1	2 13	14	15

LABEL ITEMS	
I. EPA I.D. NUMBER	PLEASE PLACE LABEL IN THIS SPACE
III. FACILITY NAME	
V. FACILITY MAILING ADDRESS	
VI. FACILITY LOCATION	

GENERAL INSTRUCTIONS

If a preprinted label has been provided, affix it in the designated space. Review the information carefully; if any of it is incorrect, cross through it and enter the correct data in the appropriate fill-in area below. Also, if any of the preprinted data is absent *(the area to the left of the label space lists the information that should appear)*, please provide it in the proper fill-in area(s) below. If the label is complete and correct, you need not complete Items I, III, V, and VI *(except VI-B which must be completed regardless)*. Complete all items if no label has been provided. Refer to the instructions for detailed item descriptions and for the legal authorizations under which this data is collected.

II. POLLUTANT CHARACTERISTICS

INSTRUCTIONS: Complete A through J to determine whether you need to submit any permit application forms to the EPA. If you answer "yes" to any questions, you must submit this form and the supplemental form listed in the parenthesis following the question. Mark "X" in the box in the third column if the supplemental form is attached. If you answer "no" to each question, you need not submit any of these forms. You may answer "no" if your activity is excluded from permit requirements; see Section C of the instructions. See also, Section D of the instructions for definitions of **bold-faced terms**.

SPECIFIC QUESTIONS	Mark "X" YES	NO	FORM ATTACHED	SPECIFIC QUESTIONS	Mark "X" YES	NO	FORM ATTACHED
A. Is this facility a **publicly owned treatment works** which results in a **discharge to waters of the U.S.**? (FORM 2A)		X		B. Does or will this facility *(either existing or proposed)* include a **concentrated animal feeding operation** or **aquatic animal production facility** which results in a **discharge to waters of the U.S.**? (FORM 2B)		X	
	16	17	18		19	20	21
C. Is this a facility which currently results in **discharges to waters of the U.S.** other than those described in A or B above? (FORM 2C)	X		X	D. Is this a proposed facility *(other than those described in A or B above)* which will result in a **discharge to waters of the U.S.**? (FORM 2D)		X	
	22	23	24		25	26	27
E. Does or will this facility treat, store, or dispose of **hazardous wastes**? (FORM 3)	X			F. Do you or will you inject at this facility industrial or municipal effluent below the lowermost stratum containing, within one quarter mile of the well bore, underground sources of drinking water? (FORM 4)		X	
	28	29	30		31	32	33
G. Do you or will you inject at this facility any produced water or other fluids which are brought to the surface in connection with conventional oil or natural gas production, inject fluids used for enhanced recovery of oil or natural gas, or inject fluids for storage of liquid hydrocarbons? (FORM 4)		X		H. Do you or will you inject at this facility fluids for special processes such as mining of sulfur by the Frasch process, solution mining of minerals, in situ combustion of fossil fuel, or recovery of geothermal energy? (FORM 4)		X	
	34	35	36		37	38	39
I. Is this facility a proposed **stationary source** which is one of the 28 industrial categories listed in the instructions and which will potentially emit 100 tons per year of any air pollutant regulated under the Clean Air Act and may affect or be located in an attainment area? (FORM 5)		X		J. Is this facility a proposed **stationary source** which is NOT one of the 28 industrial categories listed in the instructions and which will potentially emit 250 tons per year of any air pollutant regulated under the Clean Air Act and may affect or be located in an **attainment area**? (FORM 5)		X	
	40	41	42		43	44	45

III. NAME OF FACILITY

C 1 SKIP DOMINION - POSSUM POINT POWER STATION

15 16 - 29 30 69

IV. FACILITY CONTACT

A. NAME & TITLE *(last, first, & title)*	B. PHONE *(area code & no.)*
C 2 DAVID A. CRAYMER	(804) 273-3592
15 16 45	46 48 49 51 52 55

V. FACILTY MAILING ADDRESS

A. STREET OR P.O. BOX

C 3 5000 DOMINION BLVD

15 16 45

B. CITY OR TOWN	C. STATE	D. ZIP CODE
C 4 GLEN ALLEN	VA	23060
15 16 40	41 42	47 51

VI. FACILITY LOCATION

A. STREET, ROUTE NO. OR OTHER SPECIFIC IDENTIFIER

C 5 19000 POSSUM POINT ROAD

15 16 45

B. COUNTY NAME

PRINCE WILLIAM

46 70

C. CITY OR TOWN	D. STATE	E. ZIP CODE	F. COUNTY CODE *(if known)*
C 6 DUMFRIES	VA	22026	153
15 16 40	41 42	47 51	52 54

EPA Form 3510-1 (8-90)

CONTINUE ON REVERSE

00022180

CONTINUED FROM THE FRONT

VII. SIC CODES *(4-digit, in order of priority)*

A. FIRST	B. SECOND
7 4911 *(specify)* ELECTRIC POWER STATION	7 *(specify)*
C. THIRD	**D. FOURTH**
7 *(specify)*	7 *(specify)*

VIII. OPERATOR INFORMATION

A. NAME: 8 VIRGINIA ELECTRIC AND POWER COMPANY

B. Is the name listed in Item VIII-A also the owner? ☑ YES ☐ NO

C. STATUS OF OPERATOR *(Enter the appropriate letter into the answer box: if "Other," specify.)*

F = FEDERAL
S = STATE
P = PRIVATE
M = PUBLIC *(other than federal or state)*
O = OTHER *(specify)*

P *(specify)*

D. PHONE *(area code & no.)*: A (804) 273-3592

E. STREET OR P.O. BOX: 5000 DOMINION BLVD

F. CITY OR TOWN: B GLEN ALLEN

G. STATE: VA

H. ZIP CODE: 23060

IX. INDIAN LAND

Is the facility located on Indian lands? ☐ YES ☑ NO

X. EXISTING ENVIRONMENTAL PERMITS

A. NPDES *(Discharges to Surface Water)*		**D. PSD** *(Air Emissions from Proposed Sources)*	
9	N	VA0002071	9 P NR070225
B. UIC *(Underground Injection of Fluids)*		**E. OTHER** *(specify)*	
9	U		9 *(specify)*
C. RCRA *(Hazardous Wastes)*		**E. OTHER** *(specify)*	
9	R	VAD000620476	9 *(specify)*

XI. MAP

Attach to this application a topographic map of the area extending to at least one mile beyond property boundaries. The map must show the outline of the facility, the location of each of its existing and proposed intake and discharge structures, each of its hazardous waste treatment, storage, or disposal facilities, and each well where it injects fluids underground. Include all springs, rivers, and other surface water bodies in the map area. See instructions for precise requirements.

XII. NATURE OF BUSINESS *(provide a brief description)*

NATURAL GAS OR FUEL OIL FIRED ELECTRIC POWER GENERATING STATION. REFER TO ATTACHMENT A FOR TOPOGRAPHIC MAP.

XIII. CERTIFICATION *(see instructions)*

I certify under penalty of law that I have personally examined and am familiar with the information submitted in this application and all attachments and that, based on my inquiry of those persons immediately responsible for obtaining the information contained in the application, I believe that the information is true, accurate, and complete. I am aware that there are significant penalties for submitting false information, including the possibility of fine and imprisonment.

A. NAME & OFFICIAL TITLE *(type or print)*	B. SIGNATURE	C. DATE SIGNED
DAVID A. CRAYMER VP POWER GENERATION SYSTEM OPER.		8/18/15

COMMENTS FOR OFFICIAL USE ONLY

C

Addendum to Form 1

POSSUM POINT POWER STATION
ADDENDUM to Form 1

Form 1, Part II.E

The Possum Point Power Station ("Station") may temporarily store hazardous wastes for short periods in an accumulation area located inside the warehouse. However, hazardous wastes, if any, are stored in exempt quantities and/or will not be stored on site for more than 90 days. The normal generator status for the Station is conditionally exempt, small quantity generator.

DRAWING TITLE		GAI DRAWING NUMBER:
TOPOGRAPHIC MAP		**C150132-00-047-00-P-A2-001**
PROJECT		GAI FILE NUMBER:
POSSUM POINT POWER STATION 19000 POSSUM POINT ROAD, DUMFRIES, PRINCE WILLIAM COUNTY VA 22026	gai consultants	**C150132-00-047-00-P-A2-001**
		DRAWN BY: **VASKOAJ** / CHECKED BY: **DEBARJD** / APPROVED BY: **QUINLSC**
CLIENT		SHEET NO.: **1 OF 1** / SCALE: **AS SHOWN** / ISSUE DATE: **07/15/2015**
DOMINION RESOURCES SERVICE 5000 DOMINION BOULEVARD, INC. GLEN ALLEN, VIRGINIA 23060		© 2015 GAI Consultants, Inc.

This drawing was produced with computer aided drafting technology and is supported by electronic drawing files. Do not revise this drawing via manual drafting methods.

ISSUING OFFICE: Pittsburgh | 385 E. Waterfront Drive, Homestead, PA 15120

PLOTTED ON: 7/13/2015 2:46:29 PM PLOTTED BY: Zack Dimasi PLOT FILE: GAI.stb

GAI CAD FILE PATH: Z:\Energy\2015\C150132.00 - DOM - Possum Point PS CCB\CAD\Production Drawings\PROCESS\Topo Map\C150132-00-047-00-P-A2-001.dwg

Interim Configuration

EPA I.D. NUMBER (*copy from Item 1 of Form 1*)
110000340774

Please print or type in the unshaded areas only.

Form Approved.
OMB No. 2040-0086.
Approval expires 3-31-98.

FORM 2C NPDES

EPA

U.S. ENVIRONMENTAL PROTECTION AGENCY
APPLICATION FOR PERMIT TO DISCHARGE WASTEWATER
EXISTING MANUFACTURING, COMMERCIAL, MINING AND SILVICULTURE OPERATIONS
Consolidated Permits Program

I. OUTFALL LOCATION

For each outfall, list the latitude and longitude of its location to the nearest 15 seconds and the name of the receiving water.

A. OUTFALL NUMBER (*list*)	B. LATITUDE			C. LONGITUDE			D. RECEIVING WATER (*name*)
	1. DEG.	2. MIN.	3. SEC.	1. DEG.	2. MIN.	3. SEC.	
004	38	31	57	77	17	04	Mouth of Quantico Creek
005	38	32	10	77	12	36	Tributary to Quantico Creek
(501)	38	32	38	77	17	20	Internal Discharge to Outfall 005
(502)	38	32	42	77	16	47	Internal Discharge to Outfall 004
001/002	38	32	12	77	17	00	Quantico Creek

II. FLOWS, SOURCES OF POLLUTION, AND TREATMENT TECHNOLOGIES

A. Attach a line drawing showing the water flow through the facility. Indicate sources of intake water, operations contributing wastewater to the effluent, and treatment units labeled to correspond to the more detailed descriptions in Item B. Construct a water balance on the line drawing by showing average flows between intakes, operations, treatment units, and outfalls. If a water balance cannot be determined (*e.g., for certain mining activities*), provide a pictorial description of the nature and amount of any sources of water and any collection or treatment measures.

B. For each outfall, provide a description of: (1) All operations contributing wastewater to the effluent, including process wastewater, sanitary wastewater, cooling water, and storm water runoff; (2) The average flow contributed by each operation; and (3) The treatment received by the wastewater. Continue on additional sheets if necessary.

1. OUTFALL NO. (*list*)	2. OPERATION(S) CONTRIBUTING FLOW		3. TREATMENT		
	a. OPERATION (*list*)	b. AVERAGE FLOW (*include units*)	a. DESCRIPTION	b. LIST CODES FROM TABLE 2C-1	
004	Process Wastewater	2.59 MGD	Sedimentation/Floc./Flot./Neutralization/Chem. Precipitation/Mixing/Discharge to Surface Water	(2)	
	Cooling Water	(1)	(1)	(1)	
	Stormwater Runoff (annual average)	(1)	(1)	(1)	
	Ash Dewatering & Contact Waters / Pond D Comingled Water (ALTERNATES)	0.72 MGD / 2.53 MGD	(1) & Coagulation/Filtration/Ion Exchange/ Anaerobic/Chemical Condit./Landfill (AS REQ'D)	(1)	(3)
005	Process Wastewater	1.04 MGD	Sedimentation / Mixing	1-U	1-O
	(1)	(1)	Discharge to Surface Water	4-A	
	Stormwater Runoff (annual average)	(1)	(1)	(1)	
	Ash Dewatering & Contact Waters / Pond D Comingled Water	0 72 MGD / 2.53 MGD	(1) & Flocc./Chem. Precip./Neutr./Coag./Filtr. /Ion Exch./Anaer./Chem. Cond./Landf.(AS REQ'D)	(1)	(4)
(501)	Process Wastewater	1.04 MGD	Mixing / Neutralization	1-Q	2-K
	(1)	(1)	Chemical Precipitation / Sedimentation	2-C	1-U
	Stormwater Runoff (annual average)	(1)	(1)	(1)	
(502)	Process Wastewater	0.57 MGD	Mixing / Sedimentation	1-O	1-U
	(1)	(1)	Flotation	1-H	
	Cooling Water	(1)	(1)	(1)	
	Stormwater Runoff (annual average)	(1)	(1)	(1)	
001/002	Cooling Water	86.39 MGD	Mixing / Discharge to Surface Water	1-O	4-A
	Stormwater Runoff (annual average)	(1)	(1)	(1)	
	Ash Dewatering & Contact Waters (ALTERNATE)	0.72 MGD	(1) & Sed./Floc./Neutr./Chem. Precip./Coag./ Filt./Ion Ex./Anaer./Chem.Cond./Land.(AS REQ'D)	(1)	(5)
	Pond D Comingled Water (ALTERNATE)	2.53 MGD	(1)	(1)	

FOOTNOTES:

(1): included in above for respective Outfall; for treatment Codes, includes both columns.
(2): 1-U / 1-G / 1-H / 2-K / 2-C / 1-O / 4-A.
(3): 2-D / 1-Q / 2-J / 3-C / 5-E / 5-Q (AS REQUIRED).
(4): 1-G / 2-C / 2-K / 2-D / 1-Q / 2-J / 3-C / 5-E / 5-Q (AS REQUIRED).
(5): 1-U / 1-G / 2-K / 2-C / 2-D / 1-Q / 2-J / 3-C / 5-E / 5-Q (AS REQUIRED).

OFFICIAL USE ONLY (*effluent guidelines sub-categories*)

00022185

Final Configuration

EPA I.D. NUMBER (*copy from Item 1 of Form 1*)
110000340774

Please print or type in the unshaded areas only.

Form Approved.
OMB No. 2040-0086.
Approval expires 3-31-98.

FORM **2C** NPDES

EPA

U.S. ENVIRONMENTAL PROTECTION AGENCY
APPLICATION FOR PERMIT TO DISCHARGE WASTEWATER
EXISTING MANUFACTURING, COMMERCIAL, MINING AND SILVICULTURE OPERATIONS
Consolidated Permits Program

I. OUTFALL LOCATION

For each outfall, list the latitude and longitude of its location to the nearest 15 seconds and the name of the receiving water.

A. OUTFALL NUMBER (*list*)	B. LATITUDE			C. LONGITUDE			D. RECEIVING WATER (*name*)
	1. DEG.	2. MIN.	3. SEC.	1. DEG.	2. MIN.	3. SEC.	
004	38	31	57	77	17	04	Mouth of Quantico Creek
005	38	32	10	77	12	36	Tributary to Quantico Creek
(501)	38	32	38	77	17	20	Internal Discharge to Outfall 005
(502)	38	32	42	77	16	47	Internal Discharge to Outfall 004
001/002	38	32	12	77	17	00	Quantico Creek

II. FLOWS, SOURCES OF POLLUTION, AND TREATMENT TECHNOLOGIES

A. Attach a line drawing showing the water flow through the facility. Indicate sources of intake water, operations contributing wastewater to the effluent, and treatment units labeled to correspond to the more detailed descriptions in Item B. Construct a water balance on the line drawing by showing average flows between intakes, operations, treatment units, and outfalls. If a water balance cannot be determined (*e.g., for certain mining activities*), provide a pictorial description of the nature and amount of any sources of water and any collection or treatment measures.

B. For each outfall, provide a description of: (1) All operations contributing wastewater to the effluent, including process wastewater, sanitary wastewater, cooling water, and storm water runoff; (2) The average flow contributed by each operation; and (3) The treatment received by the wastewater. Continue on additional sheets if necessary.

1. OUTFALL NO. (*list*)	2. OPERATION(S) CONTRIBUTING FLOW		3. TREATMENT		
	a. OPERATION (*list*)	b. AVERAGE FLOW (*include units*)	a. DESCRIPTION	b. LIST CODES FROM TABLE 2C-1	
004	Process Wastewater	2.59 MGD	Sedimentation/Floc./Flot./Neutralization/Chem. Precipitation/Mixing/Discharge to Surface Water	(2)	
	Cooling Water	(1)	(1)	(1)	
	Stormwater Runoff (annual average)	(1)	(1)	(1)	
005	Process Wastewater	1.04 MGD	(3)	(4)	
	Cooling Water	(1)	(1)	(1)	
	Stormwater Runoff (annual average)	(1)	(1)	(1)	
	Pond D Underdrainage	0 15 MGD	(1)	(1)	
(501)	Process Wastewater	1.04 MGD	Mixing / Neutralization	1-O	2-K
	(1)	(1)	Chemical Precipitation / Sedimentation	2-C	1-U
	Stormwater Runoff (annual average)	(1)	(1)	(1)	
(502)	Process Wastewater	0.57 MGD	Mixing / Sedimentation	1-O	1-U
	(1)	(1)	Flotation	1-H	
	Cooling Water	(1)	(1)	(1)	
	Stormwater Runoff (annual average)	(1)	(1)	(1)	
001/002	Cooling Water	86.38 MGD	Mixing / Discharge to Surface Water	I-Q	4-A
	Stormwater Runoff (annual average)	(1)	(1)	(1)	
		FOOTNOTES:			
		(1): included in above for respective Outfall; for Treatment Codes, includes both columns.			
		(2): 1-U / 1-G / 1-H / 2-K / 2-C / 1-O / 4-A.			
		(3): Mixing / Discharge to Surface Water / Sedimentation / Flocculation / Flotation / Neutralization / Chemical Precipitation / Coagulation / Filtration / Ion Exchange / Anaerobic Treatment / Chemical Conditioning / Landfill (AS REQUIRED).			
		(4): 1-O / 4-A / 1-U / 1-G / 1-H / 2-K / 2-C / 2-D / 1-Q / 2-J / 3-C / 5-E / 5-Q (AS REQUIRED).			

OFFICIAL USE ONLY (*effluent guidelines sub-categories*)

00022186

Interim Configuration

CONTINUED FROM THE FRONT

C. Except for storm runoff, leaks, or spills, are any of the discharges described in Items II-A or B intermittent or seasonal?

☑ YES (*complete the following table*) ☐ NO (*go to Section III*)

1. OUTFALL NUMBER (*list*)	2. OPERATION(s) CONTRIBUTING FLOW (*list*)	3. FREQUENCY a. DAYS PER WEEK (*specify average*)	3. FREQUENCY b. MONTHS PER YEAR (*specify average*)	4. FLOW a. FLOW RATE (*in mgd*) 1. LONG TERM AVERAGE	4. FLOW a. FLOW RATE 2. MAXIMUM DAILY	4. FLOW B. TOTAL VOLUME (*specify with units*) 1. LONG TERM AVERAGE	4. FLOW B. TOTAL VOLUME 2. MAXIMUM DAILY	4. FLOW C. DURATION (*in days*)
(501)	Piping & Equipment Flushing/Cleaning			1.04				
(502)	Unit 5 Seal Oil System			0.567				
005, 004*, 001/002*	Pond D Comingled Water			2.53		137 MG		60 +/-
005, 004*, 001/002*	Ash Dewatering & Contact Waters			0.72		107 MG		547 +/-

III. PRODUCTION

A. Does an effluent guideline limitation promulgated by EPA under Section 304 of the Clean Water Act apply to your facility?

☑ YES (*complete Item III-B*) ☐ NO (*go to Section IV*)

B. Are the limitations in the applicable effluent guideline expressed in terms of production (*or other measure of operation*)?

☐ YES (*complete Item III-C*) ☑ NO (*go to Section IV*)

C. If you answered "yes" to Item III-B, list the quantity which represents an actual measurement of your level of production, expressed in the terms and units used in the applicable effluent guideline, and indicate the affected outfalls.

1. AVERAGE DAILY PRODUCTION a. QUANTITY PER DAY	b. UNITS OF MEASURE	c. OPERATION, PRODUCT, MATERIAL, ETC. (*specify*)	2. AFFECTED OUTFALLS (*list outfall numbers*)

IV. IMPROVEMENTS

A. Are you now required by any Federal, State or local authority to meet any implementation schedule for the construction, upgrading or operations of wastewater treatment equipment or practices or any other environmental programs which may affect the discharges described in this application? This includes, but is not limited to, permit conditions, administrative or enforcement orders, enforcement compliance schedule letters, stipulations, court orders, and grant or loan conditions.

☐ YES (*complete the following table*) ☑ NO (*go to Item IV-B*)

1. IDENTIFICATION OF CONDITION, AGREEMENT, ETC.	2. AFFECTED OUTFALLS a. NO.	2. AFFECTED OUTFALLS b. SOURCE OF DISCHARGE	3. BRIEF DESCRIPTION OF PROJECT	4. FINAL COMPLIANCE DATE a. REQUIRED	4. FINAL COMPLIANCE DATE b. PROJECTED

B. OPTIONAL: You may attach additional sheets describing any additional water pollution control programs (*or other environmental projects which may affect your discharges*) you now have underway or which you plan. Indicate whether each program is now underway or planned, and indicate your actual or planned schedules for construction.

☐ MARK "X" IF DESCRIPTION OF ADDITIONAL CONTROL PROGRAMS IS ATTACHED

*OPTIONAL

Final Configuration

CONTINUED FROM THE FRONT

C. Except for storm runoff, leaks, or spills, are any of the discharges described in Items II-A or B intermittent or seasonal?

☑ YES (*complete the following table*) ☐ NO (*go to Section III*)

1. OUTFALL NUMBER (*list*)	2. OPERATION(s) CONTRIBUTING FLOW (*list*)	3. FREQUENCY		4. FLOW				
		a. DAYS PER WEEK (*specify average*)	b. MONTHS PER YEAR (*specify average*)	a. FLOW RATE (*in mgd*)		B. TOTAL VOLUME (*specify with units*)		C. DURATION (*in days*)
				1. LONG TERM AVERAGE	2. MAXIMUM DAILY	1. LONG TERM AVERAGE	2. MAXIMUM DAILY	
(501)	Piping & Equipment Flushing/Cleaning			1.04				
(502)	Unit 5 Seal Oil System			0.567				

III. PRODUCTION

A. Does an effluent guideline limitation promulgated by EPA under Section 304 of the Clean Water Act apply to your facility?

☑ YES (*complete Item III-B*) ☐ NO (*go to Section IV*)

B. Are the limitations in the applicable effluent guideline expressed in terms of production (*or other measure of operation*)?

☐ YES (*complete Item III-C*) ☑ NO (*go to Section IV*)

C. If you answered "yes" to Item III-B, list the quantity which represents an actual measurement of your level of production, expressed in the terms and units used in the applicable effluent guideline, and indicate the affected outfalls.

1. AVERAGE DAILY PRODUCTION			2. AFFECTED OUTFALLS (*list outfall numbers*)
a. QUANTITY PER DAY	b. UNITS OF MEASURE	c. OPERATION, PRODUCT, MATERIAL, ETC. (*specify*)	

IV. IMPROVEMENTS

A. Are you now required by any Federal, State or local authority to meet any implementation schedule for the construction, upgrading or operations of wastewater treatment equipment or practices or any other environmental programs which may affect the discharges described in this application? This includes, but is not limited to, permit conditions, administrative or enforcement orders, enforcement compliance schedule letters, stipulations, court orders, and grant or loan conditions.

☐ YES (*complete the following table*) ☑ NO (*go to Item IV-B*)

1. IDENTIFICATION OF CONDITION, AGREEMENT, ETC.	2. AFFECTED OUTFALLS		3. BRIEF DESCRIPTION OF PROJECT	4. FINAL COMPLIANCE DATE	
	a. NO.	b. SOURCE OF DISCHARGE		a. REQUIRED	b. PROJECTED

B. OPTIONAL: You may attach additional sheets describing any additional water pollution control programs (*or other environmental projects which may affect your discharges*) you now have underway or which you plan. Indicate whether each program is now underway or planned, and indicate your actual or planned schedules for construction.

☐ MARK "X" IF DESCRIPTION OF ADDITIONAL CONTROL PROGRAMS IS ATTACHED

 CONTINUE ON PAGE 3

EPA I.D. NUMBER (*copy from Item 1 of Form 1*)
110000340774

CONTINUED FROM PAGE 2

V. INTAKE AND EFFLUENT CHARACTERISTICS

A, B, & C: See instructions before proceeding – Complete one set of tables for each outfall – Annotate the outfall number in the space provided.
NOTE: Tables V-A, V-B, and V-C are included on separate sheets numbered V-1 through V-9.

D. Use the space below to list any of the pollutants listed in Table 2c-3 of the instructions, which you know or have reason to believe is discharged or may be discharged from any outfall. For every pollutant you list, briefly describe the reasons you believe it to be present and report any analytical data in your possession.

1. POLLUTANT	2. SOURCE	1. POLLUTANT	2. SOURCE

VI. POTENTIAL DISCHARGES NOT COVERED BY ANALYSIS

Is any pollutant listed in Item V-C a substance or a component of a substance which you currently use or manufacture as an intermediate or final product or byproduct?

☐ YES (*list all such pollutants below*) ☑ NO (*go to Item VI-B*)

CONTINUED FROM THE FRONT

VII. BIOLOGICAL TOXICITY TESTING DATA

Do you have any knowledge or reason to believe that any biological test for acute or chronic toxicity has been made on any of your discharges or on a receiving water in relation to your discharge within the last 3 years?

☐ YES (*identify the test(s) and describe their purposes below*) ☑ NO (*go to Section VIII*)

VIII. CONTRACT ANALYSIS INFORMATION

Were any of the analyses reported in Item V performed by a contract laboratory or consulting firm?

☑ YES (*list the name, address, and telephone number of, and pollutants analyzed by, each such laboratory or firm below*) ☐ NO (*go to Section IX*)

A. NAME	B. ADDRESS	C. TELEPHONE (*area code & no.*)	D. POLLUTANTS ANALYZED (*list*)
ALS Environmental	10 Riverside Drive Spring City, PA 19475	(610) 948-4903	Refer to attached Conceptual Engineer's Report.

IX. CERTIFICATION

I certify under penalty of law that this document and all attachments were prepared under my direction or supervision in accordance with a system designed to assure that qualified personnel properly gather and evaluate the information submitted. Based on my inquiry of the person or persons who manage the system or those persons directly responsible for gathering the information, the information submitted is, to the best of my knowledge and belief, true, accurate, and complete. I am aware that there are significant penalties for submitting false information, including the possibility of fine and imprisonment for knowing violations.

A. NAME & OFFICIAL TITLE (*type or print*)	B. PHONE NO. (*area code & no.*)
David A. Craymer, VP Power Generation Systems Operations	(804) 273-3592
C. SIGNATURE	D. DATE SIGNED
	8/18/15

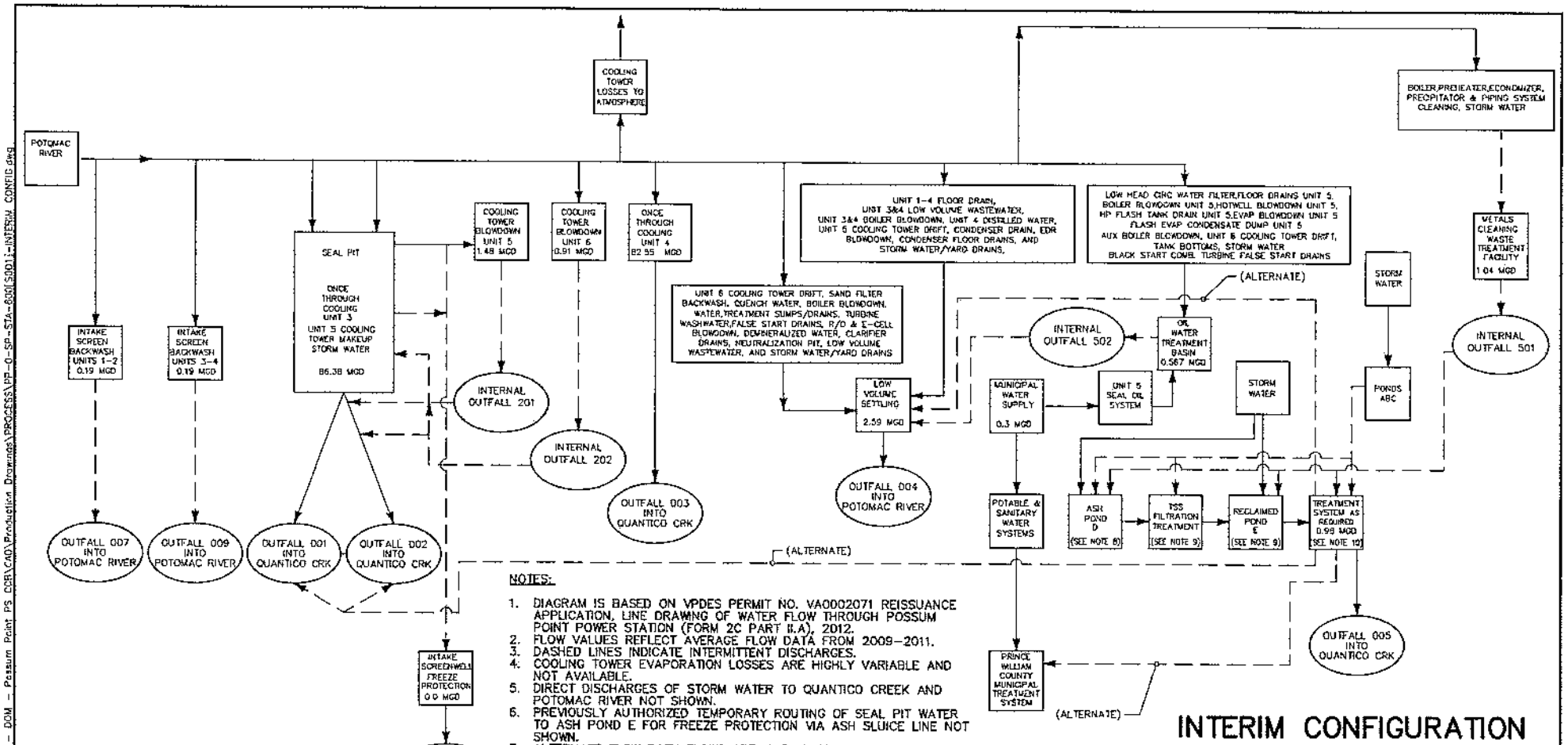

NOTES:

1. DIAGRAM IS BASED ON VPDES PERMIT NO. VA0002071 REISSUANCE APPLICATION, LINE DRAWING OF WATER FLOW THROUGH POSSUM POINT POWER STATION (FORM 2C PART II.A), 2012.
2. FLOW VALUES REFLECT AVERAGE FLOW DATA FROM 2009-2011.
3. DASHED LINES INDICATE INTERMITTENT DISCHARGES.
4. COOLING TOWER EVAPORATION LOSSES ARE HIGHLY VARIABLE AND NOT AVAILABLE.
5. DIRECT DISCHARGES OF STORM WATER TO QUANTICO CREEK AND POTOMAC RIVER NOT SHOWN.
6. PREVIOUSLY AUTHORIZED TEMPORARY ROUTING OF SEAL PIT WATER TO ASH POND E FOR FREEZE PROTECTION VIA ASH SLUICE LINE NOT SHOWN.
7. ALTERNATE FLOW PATH FLOWS ARE NOT ADDED TO RECEIVING SYSTEM OR OUTFALL FLOWS.
8. PRIOR TO OCT. 1, 2015, ALL WATERS ARE PLANNED TO BE STORED IN POND D.
9. AFTER OCT. 1, 2015, FILTERED POND D AND OTHER WATERS ARE PLANNED TO BE STORED IN RECLAIMED POND E (UNTIL PERMIT MODIFICATION IS GRANTED).
10. AFTER PERMIT MODIFICATION IS GRANTED, WATERS MAY BE DIRECTLY TREATED, AS REQUIRED, AND DISCHARGED.

INTERIM CONFIGURATION

VIRGINIA POWER
NORTH CAROLINA POWER

FOSSIL & HYDRO ENGINEERING
RICHMOND, VIRGINIA

WATER FLOW BALANCE LINE DIAGRAM

POSSUM POINT POWER STATION

CAD FILE: DGNSPEC FOR FILE VERIFICATION DATE$$$$$$$

DRAWING NO. PP-0-SP-STA-600 REV. 1

APPROVAL OF THE SUPT OF TECH SERVICES IS REQ'D PRIOR TO ISSUE OF THIS DWG

REV	DATE	DRWN	CHKD	APPD	ENGR
2	REVISED FOR VPDES INDUSTRIAL WW PERMIT MODIFICATION				
	8/17/15	LITZIJ	DEBARJD	QUINLSC	
1	REVISED PER ENVIRONMENTAL REDLINE TO INCORPORATE STATION REVIEW.				
	5/31/12	KTC	OD-D	RWM	
0	ORIG. ISSUE FOR 600 SERIES ACAD CONVERSION. REV PER ENVIRONMENTAL REDLINE.				
	3/6/12	KTC	OD-D	RWM	— —

J:\Energy\2015\C150132.00 - DOM - Possum Point PS CCR\CAD\Production Drawings\PROCESS\PP-0-SP-STA-600(S001)-INTERIM CONFIG.dwg
00022191

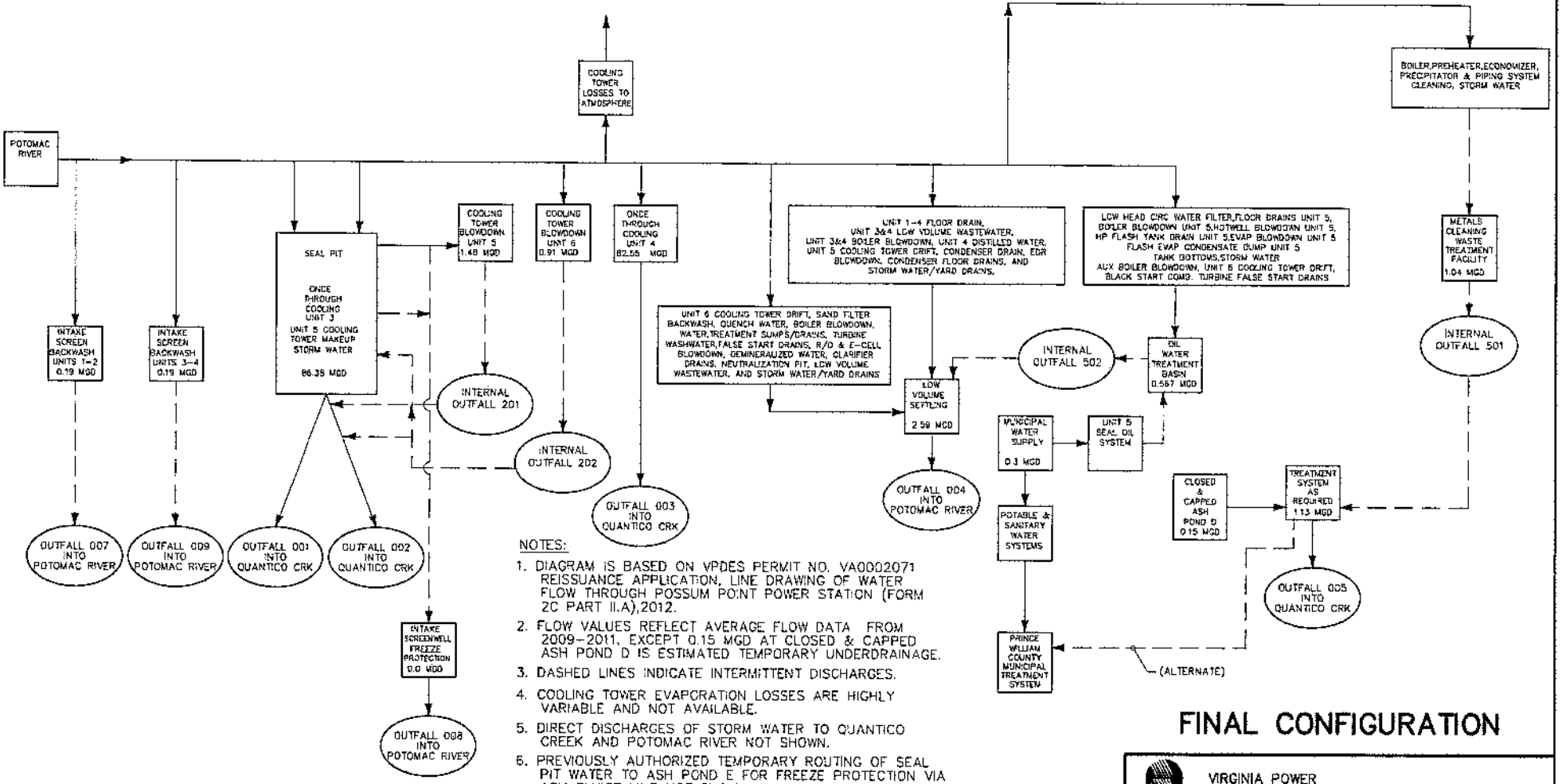

NOTES:

1. DIAGRAM IS BASED ON VPDES PERMIT NO. VA0002071 REISSUANCE APPLICATION, LINE DRAWING OF WATER FLOW THROUGH POSSUM POINT POWER STATION (FORM 2C PART II.A),2012.
2. FLOW VALUES REFLECT AVERAGE FLOW DATA FROM 2009-2011, EXCEPT 0.15 MGD AT CLOSED & CAPPED ASH POND D IS ESTIMATED TEMPORARY UNDERDRAINAGE.
3. DASHED LINES INDICATE INTERMITTENT DISCHARGES.
4. COOLING TOWER EVAPORATION LOSSES ARE HIGHLY VARIABLE AND NOT AVAILABLE.
5. DIRECT DISCHARGES OF STORM WATER TO QUANTICO CREEK AND POTOMAC RIVER NOT SHOWN.
6. PREVIOUSLY AUTHORIZED TEMPORARY ROUTING OF SEAL PIT WATER TO ASH POND E FOR FREEZE PROTECTION VIA ASH SLUICE LINE NOT SHOWN.

FINAL CONFIGURATION

VIRGINIA POWER
NORTH CAROLINA POWER
FOSSIL & HYDRO ENGINEERING
RICHMOND, VIRGINIA

WATER FLOW BALANCE LINE DIAGRAM

POSSUM POINT POWER STATION

CAD FILE: DGNSPEC FOR FILE VERIFICATION DATE$$$$$$$

DRAWING NO. PP-0-SP-STA-600 REV. 1

APPROVAL OF THE SUPT OF TECH SERVICES IS REQ'D PRIOR TO ISSUE OF THIS DWG

REV	DATE	DRWN	CHKD	APPD	ENGR	REV	DATE	DRWN	CHKD	APPD	ENGR	REV	DATE	DRWN	CHKD	APPD	ENGR
2	REVISED FOR VPDES INDUSTRIAL WW PERMIT MODIFICATION 8/14/15	LITZIJ	DEBARJD	QUINLSC		1	REVISED PER ENVIRONMENTAL REDLINE TO INCORPORATE STATION REVIEW. 5/31/12	KTC	OD-D	RWM		0	ORIG. ISSUE FOR 600 SERIES ACAD CONVERSION. REV PER ENVIRONMENTAL REDLINE. 3/6/12	KTC	OD-D	RWM	— —

00002102

PLEASE PRINT OR TYPE IN THE UNSHADED AREAS ONLY. You may report some or all of this information on separate sheets (*use the same format*) instead of completing these pages.
SEE INSTRUCTIONS.

EPA I.D. NUMBER (*copy from Item 1 of Form 1*)
110000340774

Interim & Final Configuration*

V. INTAKE AND EFFLUENT CHARACTERISTICS (*continued from page 3 of Form 2-C*) [redacted] OUTFALL NO. 004

PART A –You must provide the results of at least one analysis for every pollutant in this table. Complete one table for each outfall. See instructions for additional details.

1. POLLUTANT	2. EFFLUENT a. MAXIMUM DAILY VALUE (1) CONCENTRATION	(2) MASS	b. MAXIMUM 30 DAY VALUE (*if available*) (1) CONCENTRATION	(2) MASS	c. LONG TERM AVRG. VALUE (*if available*) (1) CONCENTRATION	(2) MASS	d. NO. OF ANALYSES	3. UNITS (*specify if blank*) a. CONCEN-TRATION	b. MASS	4. INTAKE (*optional*) a. LONG TERM AVERAGE VALUE (1) CONCENTRATION	(2) MASS	b. NO. OF ANALYSES
a. Biochemical Oxygen Demand (*BOD*)	<3.1	<140	--	--	--	--	1	PPM	LB/DAY	--	--	--
b. Chemical Oxygen Demand (*COD*)**	10.39	457	--	--	--	--	1	PPM	LB/DAY	--	--	--
c. Total Organic Carbon (*TOC*)**	5.7	260	--	--	--	--	1	PPM	LB/DAY	--	--	--
d. Total Suspended Solids (*TSS*)	21	930	--	--	--	--	1	PPM	LB/DAY	--	--	--
e. Ammonia (*as N*)	0.16	7.1	--	--	--	--	1	PPM	LB/DAY	--	--	--
f. Flow ***	VALUE 5.27		VALUE 4.90		VALUE 2.59		35	MGD	--	VALUE --		--
g. Temperature ** (*winter*)	VALUE 13.7		VALUE --		VALUE --		1	°C		VALUE --		--
h. Temperature (*summer*)	VALUE 32.0		VALUE --		VALUE --		1	°C		VALUE --		--
i. pH **	MINIMUM 7.38	MAXIMUM 8.96	MINIMUM --	MAXIMUM --			172	STANDARD UNITS				

PART B – Mark "X" in column 2-a for each pollutant you know or have reason to believe is present. Mark "X" in column 2-b for each pollutant you believe to be absent. If you mark column 2a for any pollutant which is limited either directly, or indirectly but expressly, in an effluent limitations guideline, you must provide the results of at least one analysis for that pollutant. For other pollutants for which you mark column 2a, you must provide quantitative data or an explanation of their presence in your discharge. Complete one table for each outfall. See the instructions for additional details and requirements.

1. POLLUTANT AND CAS NO. (*if available*)	2. MARK "X" a. BELIEVED PRESENT	b. BELIEVED ABSENT	3. EFFLUENT a. MAXIMUM DAILY VALUE (1) CONCENTRATION	(2) MASS	b. MAXIMUM 30 DAY VALUE (*if available*) (1) CONCENTRATION	(2) MASS	c. LONG TERM AVRG. VALUE (*if available*) (1) CONCENTRATION	(2) MASS	d. NO. OF ANALYSES	4. UNITS a. CONCEN-TRATION	b. MASS	5. INTAKE (*optional*) a. LONG TERM AVERAGE VALUE (1) CONCENTRATION	(2) MASS	b. NO. OF ANALYSES
a. Bromide ** (24959-67-9)	X		5.1	230	--	--	--	--	1	PPM	LB/DA	--	--	--
b. Chlorine, Total Residual	X		<0.2	<9	--	--	--	--	1	PPM	LB/DA	--	--	--
c. Color **	X		13	--	--	--	--	--	1	PCU	LB/DA	--	--	--
d. Fecal Coliform **		X	No Sample	--	--	--	--	--	0	COL/0.1L	LB/DA	--	--	--
e. Fluoride (16984-48-8)	X		<0.16	<7.1	--	--	--	--	1	PPM	LB/DA	--	--	--
f. Nitrate-Nitrite (as N)	X		<1.80	<79.2	--	--	--	--	1	PPM	LB/DA	--	--	--

00022193

* Values are based on weighted average of the 2015 measured data for Outfall 502 and data in 2013 VPDES Permit Reissuance Application for Outfall 004 (or as otherwise noted).
** Values are based on Outfall 004 data in 2013 VPDES Permit Reissuance Application.
*** Values are based on sum of Outfall 004 and Internal Outfall 502 flows in 2013 VPDES Permit Reissuance Application.

Interim & Final Configuration*

ITEM V-B CONTINUED FROM FRONT

1. POLLUTANT AND CAS NO. (if available)	2. MARK "X"		3. EFFLUENT							4. UNITS		5. INTAKE (optional)		
	a. BELIEVED PRESENT	b. BELIEVED ABSENT	a. MAXIMUM DAILY VALUE		b. MAXIMUM 30 DAY VALUE (if available)		c. LONG TERM AVRG. VALUE (if available)		d. NO. OF ANALYSES	a. CONCEN-TRATION	b. MASS	a. LONG TERM AVERAGE VALUE		b. NO. OF ANALYSES
			(1) CONCENTRATION	(2) MASS	(1) CONCENTRATION	(2) MASS	(1) CONCENTRATION	(2) MASS				(1) CONCENTRATION	(2) MASS	
g. Nitrogen, Total Organic (as N) **	X		0.18	8.0	0.18	7.4	0.064	1.39	11	PPM	LB/DA	--	--	--
h. Oil and Grease	X		<4	<200	--	--	--	--	1	PPM	LB/DA	--	--	--
i. Phosphorus (as P), Total (7723-14-0)	X		0.2	9	--	--	--	--	1	PPM	LB/DA	--	--	--
j. Radioactivity														
(1) Alpha, Total **		X	<0.734	--	--	--	--	--	1	pCi/L	--	--	--	--
(2) Beta, Total **		X	<2.9	--	--	--	--	--	1	pCi/L	--	--	--	--
(3) Radium, Total		X	No Sample	--	--	--	--	--	0	pCi/L	--	--	--	--
(4) Radium 226, Total		X	No Sample	--	--	--	--	--	0	pCi/L	--	--	--	--
k. Sulfate (as SO_4) (14808-79-8)	X		42.7	1880	--	--	--	--	1	PPM	LB/DA	--	--	--
l. Sulfide (as S)	X		<0.12	<5.3	--	--	--	--	1	PPM	LB/DA	--	--	--
m. Sulfite (as SO_3) (14265-45-3)		X	No Sample	--	--	--	--	--	0	PPM	LB/DA	--	--	--
n. Surfactants **	X		<0.01	<0.44	--	--	--	--	1	PPM	LB/DA	--	--	--
o. Aluminum, Total (7429-90-5)	X		<0.09	<4.0	--	--	--	--	1	PPM	LB/DA	--	--	--
p. Barium, Total (7440-39-3)	X		0.043	1.90	--	--	--	--	1	PPM	LB/DA	--	--	--
q. Boron, Total (7440-42-8)	X		<0.03	<1.4	--	--	--	--	1	PPM	LB/DA	--	--	--
r. Cobalt, Total (7440-48-4)	X		<0.0007	<0.031	--	--	--	--	1	PPM	LB/DA	--	--	--
s. Iron, Total (7439-89-6)	X		5.7	260	--	--	--	--	1	PPM	LB/DA	--	--	--
t. Magnesium, Total (7439-95-4)	X		8.7	390	--	--	--	--	1	PPM	LB/DA	--	--	--
u. Molybdenum, Total (7439-98-7)	X		0.003	0.132	--	--	--	--	1	PPM	LB/DA	--	--	--
v. Manganese, Total (7439-96-5)	X		0.07	3.1	--	--	--	--	1	PPM	LB/DA	--	--	--
w. Tin, Total ** (7440-31-5)	X		<0.005	<0.220	--	--	--	--	1	PPM	LB/DA	--	--	--
x. Titanium, Total ** (7440-32-6)	X		<0.002	<0.088	--	--	--	--	1	PPM	LB/DA	--	--	--

 CONTINUE ON PAGE V-3

* Values are based on weighted average of the 2015 measured data for Outfall 502 and data in 2013 VPDES Permit Reissuance Application for Outfall 004 (or as otherwise noted).

** Values are based on Outfall 004 data in 2013 VPDES Permit Reissuance Application.

00022194

EPA I.D. NUMBER (*copy from Item 1 of Form 1*)	OUTFALL NUMBER
110000340774	004

Interim & Final Configuration*

CONTINUED FROM PAGE 3 OF FORM 2-C

PART C - If you are a primary industry and this outfall contains process wastewater, refer to Table 2c-2 in the instructions to determine which of the GC/MS fractions you must test for. Mark "X" in column 2-a for all such GC/MS fractions that apply to your industry and for ALL toxic metals, cyanides, and total phenols. If you are not required to mark column 2-a (*secondary industries, nonprocess wastewater outfalls, and nonrequired GC/MS fractions*), mark "X" in column 2-b for each pollutant you know or have reason to believe is present. Mark "X" in column 2-c for each pollutant you believe is absent. If you mark column 2a for any pollutant, you must provide the results of at least one analysis for that pollutant. If you mark column 2b for any pollutant, you must provide the results of at least one analysis for that pollutant if you know or have reason to believe it will be discharged in concentrations of 10 ppb or greater. If you mark column 2b for acrolein, acrylonitrile, 2,4 dinitrophenol, or 2-methyl-4, 6 dinitrophenol, you must provide the results of at least one analysis for each of these pollutants which you know or have reason to believe that you discharge in concentrations of 100 ppb or greater. Otherwise, for pollutants for which you mark column 2b, you must either submit at least one analysis or briefly describe the reasons the pollutant is expected to be discharged. Note that there are 7 pages to this part; please review each carefully. Complete one table (*all 7 pages*) for each outfall. See instructions for additional details and requirements.

1. POLLUTANT AND CAS NUMBER (*if available*)	2. MARK "X"			3. EFFLUENT							4. UNITS		5. INTAKE (*optional*)		
	a. TESTING REQUIRED	b. BELIEVED PRESENT	c. BELIEVED ABSENT	a. MAXIMUM DAILY VALUE (1) CONCENTRATION	a. MAXIMUM DAILY VALUE (2) MASS	b. MAXIMUM 30 DAY VALUE (*if available*) (1) CONCENTRATION	b. MAXIMUM 30 DAY VALUE (*if available*) (2) MASS	c. LONG TERM AVRG. VALUE (*if available*) (1) CONCENTRATION	c. LONG TERM AVRG. VALUE (*if available*) (2) MASS	d. NO. OF ANALYSES	a. CONCEN-TRATION	b. MASS	a. LONG TERM AVERAGE VALUE (1) CONCENTRATION	a. LONG TERM AVERAGE VALUE (2) MASS	b. NO. OF ANALYSES
METALS, CYANIDE, AND TOTAL PHENOLS															
1M. Antimony, Total (7440-36-0)	X	X		<0.001	<0.044	--	--	--	--	1	PPM	LB/DA	--	--	--
2M. Arsenic, Total (7440-38-2)	X	X		<0.003	<0.132	--	--	--	--	1	PPM	LB/DA	--	--	--
3M. Beryllium, Total (7440-41-7)	X	X		<0.0002	<0.009	--	--	--	--	1	PPM	LB/DA	--	--	--
4M. Cadmium, Total (7440-43-9)	X	X		<0.0003	<0.014	--	--	--	--	1	PPM	LB/DA	--	--	--
5M. Chromium, Total (7440-47-3)	X	X		<0.001	<0.044	--	--	--	--	1	PPM	LB/DA	--	--	--
6M. Copper, Total (7440-50-8)	X	X		<0.009	<0.396	--	--	--	--	1	PPM	LB/DA	--	--	--
7M. Lead, Total (7439-92-1)	X	X		<0.001	<0.044	--	--	--	--	1	PPM	LB/DA	--	--	--
8M. Mercury, Total (7439-97-6)	X	X		<0.0002	<0.009	--	--	--	--	1	PPM	LB/DA	--	--	--
9M. Nickel, Total (7440-02-0)	X	X		<0.011	<0.484	--	--	--	--	1	PPM	LB/DA	--	--	--
10M. Selenium, Total (7782-49-2)	X	X		<0.003	<0.132	--	--	--	--	1	PPM	LB/DA	--	--	--
11M. Silver, Total (7440-22-4)	X	X		<0.0002	<0.009	--	--	--	--	1	PPM	LB/DA	--	--	--
12M. Thallium, Total (7440-28-0)	X	X		<0.0006	<0.027	--	--	--	--	1	PPM	LB/DA	--	--	--
13M. Zinc, Total (7440-66-6)	X	X		<0.02	<0.88	--	--	--	--	1	PPM	LB/DA	--	--	--
14M. Cyanide, Total (57-12-5)	X	X		<0.01	<0.44	--	--	--	--	1	PPM	LB/DA	--	--	--
15M. Phenols, Total **	X	X		0.01	0.44	--	--	--	--	1	PPM	LB/DA	--	--	--
DIOXIN															
2,3,7,8-Tetra-chlorodibenzo-P-Dioxin (1764-01-6)			X	DESCRIBE RESULTS		No Sample									

* Values are based on weighted average of the 2015 measured data for Outfall 502 and data in 2013 VPDES Permit Reissuance Application for Outfall 004 (or as otherwise noted).

** Values are based on Outfall 004 data in 2013 VPDES Permit Reissuance Application.

00022195

CONTINUED FROM THE FRONT

1. POLLUTANT AND CAS NUMBER (if available)	2. MARK "X"			3. EFFLUENT							4. UNITS		5. INTAKE (optional)		
	a. TESTING REQUIRED	b. BELIEVED PRESENT	c. BELIEVED ABSENT	a. MAXIMUM DAILY VALUE		b. MAXIMUM 30 DAY VALUE (if available)		c. LONG TERM AVRG. VALUE (if available)		d. NO. OF ANALYSES	a. CONCEN-TRATION	b. MASS	a. LONG TERM AVERAGE VALUE		b. NO. OF ANALYSES
				(1) CONCENTRATION	(2) MASS	(1) CONCENTRATION	(2) MASS	(1) CONCENTRATION	(2) MASS				(1) CONCENTRATION	(2) MASS	
GC/MS FRACTION – VOLATILE COMPOUNDS															
1V. Acrolein (107-02-8)	X	X		<8.4	<0.37	--	--	--	--	1	PPB	LB/DAY	--	--	--
2V. Acrylonitrile (107-13-1)	X	X		<1.4	<0.07	--	--	--	--	1	PPB	LB/DAY	--	--	--
3V. Benzene (71-43-2)	X	X		<3.5	<0.16	--	--	--	--	1	PPB	LB/DAY	--	--	--
4V. Bis (*Chloro-methyl*) Ether (542-88-1)				*DELISTED 02-4-1981* ANALYSIS NOT REQUIRED FOR THIS PARAMETER											
5V. Bromoform (75-25-2)	X	X		<3.8	<0.17	--	--	--	--	1	PPB	LB/DAY	--	--	--
6V. Carbon Tetrachloride (56-23-5)	X	X		<2.3	<0.11	--	--	--	--	1	PPB	LB/DAY	--	--	--
7V. Chlorobenzene (108-90-7)	X	X		<5	<0.3	--	--	--	--	1	PPB	LB/DAY	--	--	--
8V. Chlorodi-bromomethane (124-48-1)	X	X		<2.5	<0.11	--	--	--	--	1	PPB	LB/DAY	--	--	--
9V. Chloroethane (75-00-3) **	X	X		<1.1	<0.05	--	--	--	--	1	PPB	LB/DAY	--	--	--
10V. 2-Chloro-ethylvinyl Ether (110-75-8) **	X	X		<1.2	<0.06	--	--	--	--	1	PPB	LB/DAY	--	--	--
11V. Chloroform (67-66-3)	X	X		<14	<0.62	--	--	--	--	1	PPB	LB/DAY	--	--	--
12V. Dichloro-bromomethane (75-27-4)	X	X		<1.8	<0.08	--	--	--	--	1	PPB	LB/DAY	--	--	--
13V. Dichloro-difluoromethane (75-71-8)				*DELISTED 01-8-1981* ANALYSIS NOT REQUIRED FOR THIS PARAMETER											
14V. 1,1-Dichloro-ethane (75-34-3) **	X	X		<4.7	<0.21	--	--	--	--	1	PPB	LB/DAY	--	--	--
15V. 1,2-Dichloro-ethane (107-06-2)	X	X		<2.3	<0.11	--	--	--	--	1	PPB	LB/DAY	--	--	--
16V. 1,1-Dichloro-ethylene (75-35-4)	X	X		<2.3	<0.11	--	--	--	--	1	PPB	LB/DAY	--	--	--
17V. 1,2-Dichloro-propane (78-87-5)	X	X		<5	<0.3	--	--	--	--	1	PPB	LB/DAY	--	--	--
18V. 1,3-Dichloro-propylene (542-75-6)	X	X		<4.7	<0.21	--	--	--	--	1	PPB	LB/DAY	--	--	--
19V. Ethylbenzene (100-41-4)	X	X		<5.7	<0.26	--	--	--	--	1	PPB	LB/DAY	--	--	--
20V. Methyl Bromide (74-83-9)	X	X		<1.2	<0.06	--	--	--	--	1	PPB	LB/DAY	--	--	--
21V. Methyl Chloride (74-87-3) **	X	X		<1.1	<0.05	--	--	--	--	1	PPB	LB/DAY	--	--	--

 CONTINUE ON PAGE V-5

* Values are based on weighted average of the 2015 measured data for Outfall 502 and data in 2013 VPDES Permit Reissuance Application for Outfall 004 (or as otherwise noted).

** Values are based on Outfall 004 data in 2013 VPDES Permit Reissuance Application.

00022196

Interim & Final Configuration*

CONTINUED FROM PAGE V-4

1. POLLUTANT AND CAS NUMBER (if available)	2. MARK "X"			3. EFFLUENT							4. UNITS		5. INTAKE (optional)		
	a. TESTING REQUIRED	b. BELIEVED PRESENT	c. BELIEVED ABSENT	a. MAXIMUM DAILY VALUE		b. MAXIMUM 30 DAY VALUE (if available)		c. LONG TERM AVRG. VALUE (if available)		d. NO. OF ANALYSES	a. CONCEN-TRATION	b. MASS	a. LONG TERM AVERAGE VALUE		b. NO. OF ANALYSES
				(1) CONCENTRATION	(2) MASS	(1) CONCENTRATION	(2) MASS	(1) CONCENTRATION	(2) MASS				(1) CONCENTRATION	(2) MASS	
GC/MS FRACTION – VOLATILE COMPOUNDS (continued)															
22V. Methylene Chloride (75-09-2)	X	X		<2.3	<0.11	--	--	--	--	1	PPB	LB/DAY	--	--	--
23V. 1,1,2,2-Tetrachloroethane (79-34-5)	X	X		<5.5	<0.25	--	--	--	--	1	PPB	LB/DAY	--	--	--
24V. Tetrachloro-ethylene (127-18-4)	X	X		<3.3	<0.15	--	--	--	--	1	PPB	LB/DAY	--	--	--
25V. Toluene (108-88-3)	X	X		<5	<0.3	--	--	--	--	1	PPB	LB/DAY	--	--	--
26V. 1,2-Trans-Dichloroethylene (156-60-5)	X	X		<1.3	<0.06	--	--	--	--	1	PPB	LB/DAY	--	--	--
27V. 1,1,1-Trichloro-ethane (71-55-6) **	X	X		<3.8	<0.17	--	--	--	--	1	PPB	LB/DAY	--	--	--
28V. 1,1,2-Trichloro-ethane (79-00-5)		X		<4	<0.2	--	--	--	--	1	PPB	LB/DAY	--	--	--
29V Trichloro-ethylene (79-01-6)	X	X		<1.6	<0.08	--	--	--	--	1	PPB	LB/DAY	--	--	--
30V. Trichloro-fluoromethane (75-69-4)				*DELISTED 01-8-1981* ANALYSIS NOT REQUIRED FOR THIS PARAMETER											
31V. Vinyl Chloride (75-01-4)	X	X		<1.5	<0.07	--	--	--	--	1	PPB	LB/DAY	--	--	--
GC/MS FRACTION – ACID COMPOUNDS															
1A. 2-Chlorophenol (95-57-8)	X	X		<5	<0.3	--	--	--	--	1	PPB	LB/DAY	--	--	--
2A. 2,4-Dichloro-phenol (120-83-2)	X	X		<5	<0.3	--	--	--	--	1	PPB	LB/DAY	--	--	--
3A. 2,4-Dimethyl-phenol (105-67-9)	X	X		<5	<0.3	--	--	--	--	1	PPB	LB/DAY	--	--	--
4A. 4,6-Dinitro-O-Cresol (534-52-1)	X	X		<40	<1.8	--	--	--	--	1	PPB	LB/DAY	--	--	--
5A. 2,4-Dinitro-phenol (51-28-5)	X	X		<5	<0.3	--	--	--	--	1	PPB	LB/DAY	--	--	--
6A. 2-Nitrophenol (88-75-5) **	X	X		<5	<0.3	--	--	--	--	1	PPB	LB/DAY	--	--	--
7A. 4-Nitrophenol (100-02-7) **	X	X		<5	<0.3	--	--	--	--	1	PPB	LB/DAY	--	--	--
8A. P-Chloro-M-Cresol (59-50-7) **	X	X		<5	<0.3	--	--	--	--	1	PPB	LB/DAY	--	--	--
9A. Pentachloro-phenol (87-86-5)	X	X		<5	<0.3	--	--	--	--	1	PPB	LB/DAY	--	--	--
10A. Phenol (108-95-2)	X	X		<4	<0.2	--	--	--	--	1	PPB	LB/DAY	--	--	--
11A. 2,4,6-Trichloro-phenol (88-05-2)	X	X		<4	<0.2	--	--	--	--	1	PPB	LB/DAY	--	--	--

CONTINUE ON REVERSE

* Values are based on weighted average of the 2015 measured data for Outfall 502 and data in 2013 VPDES Permit Reissuance Application for Outfall 004 (or as otherwise noted).

** Values are based on Outfall 004 data in 2013 VPDES Permit Reissuance Application.

00022197

CONTINUED FROM THE FRONT

1. POLLUTANT AND CAS NUMBER (*if available*)	2. MARK "X"			3. EFFLUENT							4. UNITS		5. INTAKE (*optional*)		
	a. TESTING REQUIRED	b. BELIEVED PRESENT	c. BELIEVED ABSENT	a. MAXIMUM DAILY VALUE		b. MAXIMUM 30 DAY VALUE (*if available*)		c. LONG TERM AVRG. VALUE (*if available*)		d. NO. OF ANALYSES	a. CONCEN-TRATION	b. MASS	a. LONG TERM AVERAGE VALUE		b. NO. OF ANALYSES
				(1) CONCENTRATION	(2) MASS	(1) CONCENTRATION	(2) MASS	(1) CONCENTRATION	(2) MASS				(1) CONCENTRATION	(2) MASS	
GC/MS FRACTION – BASE/NEUTRAL COMPOUNDS															
1B. Acenaphthene (83-32-9)	X	X		<4	<0.2	--	--	--	--	1	PPB	LB/DAY	--	--	--
2B. Acenaphtylene (208-96-8) **	X	X		<5	<0.3	--	--	--	--	1	PPB	LB/DAY	--	--	--
3B. Anthracene (120-12-7)	X	X		<4	<0.2	--	--	--	--	1	PPB	LB/DAY	--	--	--
4B. Benzidine (92-87-5)	X	X		<9	<0.4	--	--	--	--	1	PPB	LB/DAY	--	--	--
5B. Benzo (*a*) Anthracene (56-55-3)	X	X		<4	<0.2	--	--	--	--	1	PPB	LB/DAY	--	--	--
6B. Benzo (*a*) Pyrene (50-32-8)	X	X		<4	<0.2	--	--	--	--	1	PPB	LB/DAY	--	--	--
7B. 3,4-Benzo-fluoranthene (205-99-2)	X	X		<4	<0.2	--	--	--	--	1	PPB	LB/DAY	--	--	--
8B. Benzo (*ghi*) ** Perylene (191-24-2)	X	X		<5	<0.3	--	--	--	--	1	PPB	LB/DAY	--	--	--
9B. Benzo (*k*) Fluoranthene (207-08-9)	X	X		<4	<0.2	--	--	--	--	1	PPB	LB/DAY	--	--	--
10B. Bis (*2-Chloro-ethoxy*) Methane (111-91-1) **	X	X		<5	<0.3	--	--	--	--	1	PPB	LB/DAY	--	--	--
11B. Bis (*2-Chloro-ethyl*) Ether (111-44-4)	X	X		<4	<0.2	--	--	--	--	1	PPB	LB/DAY	--	--	--
12B. Bis (*2-Chloroisopropyl*) Ether (102-80-1)	X	X		<5	<0.3	--	--	--	--	1	PPB	LB/DAY	--	--	--
13B. Bis (*2-Ethyl-hexyl*) Phthalate (117-81-7)	X	X		<4	<0.2	--	--	--	--	1	PPB	LB/DAY	--	--	--
14B. 4-Bromophenyl Phenyl Ether (101-55-3) **	X	X		<5	<0.3	--	--	--	--	1	PPB	LB/DAY	--	--	--
15B. Butyl Benzyl Phthalate (85-68-7)	X	X		<4	<0.2	--	--	--	--	1	PPB	LB/DAY	--	--	--
16B. 2-Chloro-naphthalene (91-58-7)	X	X		<4	<0.2	--	--	--	--	1	PPB	LB/DAY	--	--	--
17B. 4-Chloro-phenyl Phenyl Ether (7005-72-3) **	X	X		<5	<0.3	--	--	--	--	1	PPB	LB/DAY	--	--	--
18B. Chrysene (218-01-9)	X	X		<4	<0.2	--	--	--	--	1	PPB	LB/DAY	--	--	--
19B. Dibenzo (*a,h*) Anthracene (53-70-3)	X	X		<4	<0.2	--	--	--	--	1	PPB	LB/DAY	--	--	--
20B. 1,2-Dichloro-benzene (95-50-1)	X	X		<4	<0.2	--	--	--	--	1	PPB	LB/DAY	--	--	--
21B. 1,3-Di-chloro-benzene (541-73-1)	X	X		<4	<0.2	--	--	--	--	1	PPB	LB/DAY	--	--	--

 CONTINUE ON PAGE V-7

* Values are based on weighted average of the 2015 measured data for Outfall 502 and data in 2013 VPDES Permit Reissuance Application for Outfall 004 (or as otherwise noted).

** Values are based on Outfall 004 data in 2013 VPDES Permit Reissuance Application.

Interim & Final Configuration*

CONTINUED FROM PAGE V-6

1. POLLUTANT AND CAS NUMBER (if available)	2. MARK "X"			3. EFFLUENT							4. UNITS		5. INTAKE (optional)		
	a. TESTING REQUIRED	b. BELIEVED PRESENT	c. BELIEVED ABSENT	a. MAXIMUM DAILY VALUE		b. MAXIMUM 30 DAY VALUE (if available)		c. LONG TERM AVRG. VALUE (if available)		d. NO. OF ANALYSES	a. CONCEN-TRATION	b. MASS	a. LONG TERM AVERAGE VALUE		b. NO. OF ANALYSES
				(1) CONCENTRATION	(2) MASS	(1) CONCENTRATION	(2) MASS	(1) CONCENTRATION	(2) MASS				(1) CONCENTRATION	(2) MASS	
GC/MS FRACTION – BASE/NEUTRAL COMPOUNDS (continued)															
22B. 1,4-Dichloro-benzene (106-46-7)	X	X		<4	<0.2	--	--	--	--	1	PPB	LB/DAY	--	--	--
23B. 3,3-Dichloro-benzidine (91-94-1)	X	X		<5	<0.3	--	--	--	--	1	PPB	LB/DAY	--	--	--
24B. Diethyl Phthalate (84-66-2)	X	X		<4	<0.2	--	--	--	--	1	PPB	LB/DAY	--	--	--
25B. Dimethyl Phthalate (131-11-3)	X	X		<4	<0.2	--	--	--	--	1	PPB	LB/DAY	--	--	--
26B. Di-N-Butyl Phthalate (84-74-2)	X	X		<4	<0.2	--	--	--	--	1	PPB	LB/DAY	--	--	--
27B. 2,4-Dinitro-toluene (121-14-2)	X	X		<4	<0.2	--	--	--	--	1	PPB	LB/DAY	--	--	--
28B. 2,6-Dinitro-toluene (606-20-2) **	X	X		<5	<0.3	--	--	--	--	1	PPB	LB/DAY	--	--	--
29B. Di-N-Octyl Phthalate (117-84-0) **	X	X		<5	<0.3	--	--	--	--	1	PPB	LB/DAY	--	--	--
30B. 1,2-Diphenyl-hydrazine (as Azo-benzene) (122-66-7)	X	X		<0.2	<0.1	--	--	--	--	1	PPB	LB/DAY	--	--	--
31B. Fluoranthene (206-44-0)	X	X		<4	<0.2	--	--	--	--	1	PPB	LB/DAY	--	--	--
32B. Fluorene (86-73-7)	X	X		<4	<0.2	--	--	--	--	1	PPB	LB/DAY	--	--	--
33B. Hexachloro-benzene (118-74-1)	X	X		<4	<0.2	--	--	--	--	1	PPB	LB/DAY	--	--	--
34B. Hexachloro-butadiene (87-68-3)	X	X		<4	<0.2	--	--	--	--	1	PPB	LB/DAY	--	--	--
35B. Hexachloro-cyclopentadiene (77-47-4)	X	X		<5	<0.3	--	--	--	--	1	PPB	LB/DAY	--	--	--
36B Hexachloro-ethane (67-72-1)	X	X		<4	<0.2	--	--	--	--	1	PPB	LB/DAY	--	--	--
37B. Indeno (1,2,3-cd) Pyrene (193-39-5)	X	X		<4	<0.2	--	--	--	--	1	PPB	LB/DAY	--	--	--
38B. Isophorone (78-59-1)	X	X		<4	<0.2	--	--	--	--	1	PPB	LB/DAY	--	--	--
39B. Naphthalene (91-20-3) **	X	X		<5	<0.3	--	--	--	--	1	PPB	LB/DAY	--	--	--
40B. Nitrobenzene (98-95-3)	X	X		<5	<0.3	--	--	--	--	1	PPB	LB/DAY	--	--	--
41B. N-Nitro-sodimethylamine (62-75-9)	X	X		<5	<0.3	--	--	--	--	1	PPB	LB/DAY	--	--	--
42B. N-Nitrosodi-N-Propylamine (621-64-7)	X	X		<5	<0.3	--	--	--	--	1	PPB	LB/DAY	--	--	--

CONTINUE ON REVERSE

* Values are based on weighted average of the 2015 measured data for Outfall 502 and data in 2013 VPDES Permit Reissuance Application for Outfall 004 (or as otherwise noted).

** Values are based on Outfall 004 data in 2013 VPDES Permit Reissuance Application.

00022199

Interim & Final Configuration*

CONTINUED FROM THE FRONT

1. POLLUTANT AND CAS NUMBER (if available)	2. MARK "X"			3. EFFLUENT							4. UNITS		5. INTAKE (optional)		
	a. TESTING REQUIRED	b. BELIEVED PRESENT	c. BELIEVED ABSENT	a. MAXIMUM DAILY VALUE		b. MAXIMUM 30 DAY VALUE (if available)		c. LONG TERM AVRG. VALUE (if available)		d. NO. OF ANALYSES	a. CONCEN-TRATION	b. MASS	a. LONG TERM AVERAGE VALUE		b. NO. OF ANALYSES
				(1) CONCENTRATION	(2) MASS	(1) CONCENTRATION	(2) MASS	(1) CONCENTRATION	(2) MASS				(1) CONCENTRATION	(2) MASS	
GC/MS FRACTION – BASE/NEUTRAL COMPOUNDS (continued)															
43B. N-Nitro-sodiphenylamine (86-30-6)	X	X		<5	<0.3	--	--	--	--	1	PPB	LB/DAY	--	--	--
44B. Phenanthrene (85-01-8)**	X	X		<5	<0.3	--	--	--	--	1	PPB	LB/DAY	--	--	--
45B. Pyrene (129-00-0)	X	X		<4	<0.2	--	--	--	--	1	PPB	LB/DAY	--	--	--
46B. 1,2,4-Tri-chlorobenzene (120-82-1)	X	X		<4	<0.2	--	--	--	--	1	PPB	LB/DAY	--	--	--
GC/MS FRACTION – PESTICIDES															
1P. Aldrin (309-00-2)	X	X		<0.04	<0.01	--	--	--	--	1	PPB	LB/DAY	--	--	--
2P. α-BHC (319-84-6)	X	X		<0.04	<0.01	--	--	--	--	1	PPB	LB/DAY	--	--	--
3P. β-BHC (319-85-7)	X	X		<0.04	<0.01	--	--	--	--	1	PPB	LB/DAY	--	--	--
4P. γ-BHC (58-89-9)	X	X		<0.04	<0.01	--	--	--	--	1	PPB	LB/DAY	--	--	--
5P. δ-BHC (319-86-8)	X	X		<0.04	<0.01	--	--	--	--	1	PPB	LB/DAY	--	--	--
6P. Chlordane (57-74-9)	X	X		<0.2	<0.1	--	--	--	--	1	PPB	LB/DAY	--	--	--
7P. 4,4'-DDT (50-29-3)	X	X		<0.1	<0.1	--	--	--	--	1	PPB	LB/DAY	--	--	--
8P. 4,4'-DDE (72-55-9)	X	X		<0.1	<0.1	--	--	--	--	1	PPB	LB/DAY	--	--	--
9P. 4,4'-DDD (72-54-8)	X	X		<0.1	<0.1	--	--	--	--	1	PPB	LB/DAY	--	--	--
10P. Dieldrin (60-57-1)	X	X		<0.1	<0.1	--	--	--	--	1	PPB	LB/DAY	--	--	--
11P. α-Enosulfan (115-29-7)	X	X		<0.1	<0.1	--	--	--	--	1	PPB	LB/DAY	--	--	--
12P. β-Endosulfan (115-29-7)	X	X		<0.1	<0.1	--	--	--	--	1	PPB	LB/DAY	--	--	--
13P. Endosulfan Sulfate (1031-07-8)	X	X		<0.1	<0.1	--	--	--	--	1	PPB	LB/DAY	--	--	--
14P. Endrin (72-20-8)	X	X		<0.1	<0.1	--	--	--	--	1	PPB	LB/DAY	--	--	--
15P. Endrin Aldehyde (7421-93-4)	X	X		<0.1	<0.1	--	--	--	--	1	PPB	LB/DAY	--	--	--
16P. Heptachlor (76-44-8)	X	X		<0.04	<0.01	--	--	--	--	1	PPB	LB/DAY	--	--	--

 CONTINUE ON PAGE V-9

* Values are based on weighted average of the 2015 measured data for Outfall 502 and data in 2013 VPDES Permit Reissuance Application for Outfall 004 (or as otherwise noted).

** Values are based on Outfall 004 data in 2013 VPDES Permit Reissuance Application.

00022200

EPA I.D. NUMBER (*copy from Item 1 of Form 1*)	OUTFALL NUMBER
110000340774	004

Interim & Final Configuration*

CONTINUED FROM PAGE V-8

1. POLLUTANT AND CAS NUMBER (*if available*)	2. MARK "X"			3. EFFLUENT							4. UNITS		5. INTAKE (*optional*)		
	a. TESTING REQUIRED	b. BELIEVED PRESENT	c. BELIEVED ABSENT	a. MAXIMUM DAILY VALUE		b. MAXIMUM 30 DAY VALUE (*if available*)		c. LONG TERM AVRG. VALUE (*if available*)		d. NO. OF ANALYSES	a. CONCEN-TRATION	b. MASS	a. LONG TERM AVERAGE VALUE		b. NO. OF ANALYSES
				(1) CONCENTRATION	(2) MASS	(1) CONCENTRATION	(2) MASS	(1) CONCENTRATION	(2) MASS				(1) CONCENTRATION	(2) MASS	
GC/MS FRACTION – PESTICIDES (*continued*)															
17P. Heptachlor Epoxide (1024-57-3)	X	X		<0.1	<0.1	--	--	--	--	1	PPB	LB/DAY	--	--	--
18P. PCB-1242 ** (53469-21-9)	X	X		<1	<0.1	--	--	--	--	1	PPB	LB/DAY	--	--	--
19P. PCB-1254 ** (11097-69-1)	X	X		<1	<0.1	--	--	--	--	1	PPB	LB/DAY	--	--	--
20P. PCB-1221 ** (11104-28-2)	X	X		<1	<0.1	--	--	--	--	1	PPB	LB/DAY	--	--	--
21P. PCB-1232 ** (11141-16-5)	X	X		<1	<0.1	--	--	--	--	1	PPB	LB/DAY	--	--	--
22P. PCB-1248 ** (12672-29-6)	X	X		<1	<0.1	--	--	--	--	1	PPB	LB/DAY	--	--	--
23P. PCB-1260 ** (11096-82-5)	X	X		<1	<0.1	--	--	--	--	1	PPB	LB/DAY	--	--	--
24P. PCB-1016 ** (12674-11-2)	X	X		<1	<0.1	--	--	--	--	1	PPB	LB/DAY	--	--	--
25P. Toxaphene (8001-35-2)	X	X		<4	<0.2	--	--	--	--	1	PPB	LB/DAY	--	--	--

* Values are based on weighted average of the 2015 measured data for Outfall 502 and data in 2013 VPDES Permit Reissuance Application for Outfall 004 (or as otherwise noted).

** Values are based on Outfall 004 data in 2013 VPDES Permit Reissuance Application.

00022201

PLEASE PRINT OR TYPE IN THE UNSHADED AREAS ONLY. You may report some or all of this information on separate sheets (*use the same format*) instead of completing these pages.
SEE INSTRUCTIONS.

EPA I.D. NUMBER (*copy from Item I of Form 1*)
110000340774

Interim Configuration: Pond D Comingled Waters*

V. INTAKE AND EFFLUENT CHARACTERISTICS (*continued from page 3 of Form 2-C*) [redacted] OUTFALL NO. 005

PART A –You must provide the results of at least one analysis for every pollutant in this table. Complete one table for each outfall. See instructions for additional details.

1. POLLUTANT	2. EFFLUENT a. MAXIMUM DAILY VALUE (1) CONCENTRATION	(2) MASS	b. MAXIMUM 30 DAY VALUE (*if available*) (1) CONCENTRATION	(2) MASS	c. LONG TERM AVRG. VALUE (*if available*) (1) CONCENTRATION	(2) MASS	d. NO. OF ANALYSES	3. UNITS (*specify if blank*) a. CONCEN-TRATION	b. MASS	4. INTAKE (*optional*) a. LONG TERM AVERAGE VALUE (1) CONCENTRATION	(2) MASS	b. NO. OF ANALYSES
a. Biochemical Oxygen Demand (*BOD*)	<0.8	30	--	--	--	--	1	PPM	LB/DAY	--	--	--
b. Chemical Oxygen Demand (*COD*)	No Sample	--	--	--	--	--	0	PPM	LB/DAY	--	--	--
c. Total Organic Carbon (*TOC*)	No Sample	--	--	--	--	--	0	PPM	LB/DAY	--	--	--
d. Total Suspended Solids (*TSS*)	<8	<300	--	--	--	--	1	PPM	LB/DAY	--	--	--
e. Ammonia (*as N*)	<0.03	<0.88	--	--	--	--	1	PPM	LB/DAY	--	--	--
f. Flow **	VALUE 3.5		VALUE 2.53		VALUE 0.98		70	MGD	--	VALUE --		--
g. Temperature (*winter*)	VALUE No Sample		VALUE --		VALUE --		0	°C		VALUE --		--
h. Temperature (*summer*)	VALUE 31.43		VALUE --		VALUE --		1	°C		VALUE --		--
i. pH	MINIMUM 7.97	MAXIMUM 8.10	MINIMUM --	MAXIMUM --			3	STANDARD UNITS				

PART B – Mark "X" in column 2-a for each pollutant you know or have reason to believe is present. Mark "X" in column 2-b for each pollutant you believe to be absent. If you mark column 2a for any pollutant which is limited either directly, or indirectly but expressly, in an effluent limitations guideline, you must provide the results of at least one analysis for that pollutant. For other pollutants for which you mark column 2a, you must provide quantitative data or an explanation of their presence in your discharge. Complete one table for each outfall. See the instructions for additional details and requirements.

1. POLLUTANT AND CAS NO. (*if available*)	2. MARK "X" a. BELIEVED PRESENT	b. BELIEVED ABSENT	3. EFFLUENT a. MAXIMUM DAILY VALUE (1) CONCENTRATION	(2) MASS	b. MAXIMUM 30 DAY VALUE (*if available*) (1) CONCENTRATION	(2) MASS	c. LONG TERM AVRG. VALUE (*if available*) (1) CONCENTRATION	(2) MASS	d. NO. OF ANALYSES	4. UNITS a. CONCEN-TRATION	b. MASS	5. INTAKE (*optional*) a. LONG TERM AVERAGE VALUE (1) CONCENTRATION	(2) MASS	b. NO. OF ANALYSES
a. Bromide (24959-67-9)		X	No Sample	--	--	--	--	--	0	PPM	LB/DA	--	--	--
b. Chlorine, Total Residual	X		0.07	2.1	--	--	--	--	1	PPM	LB/DA	--	--	--
c. Color		X	No Sample	--	--	--	--	--	0	PCU	--	--	--	--
d. Fecal Coliform		X	No Sample	--	--	--	--	--	0	COL/0.1L	--	--	--	--
e. Fluoride (16984-48-8)	X		0.5	20	--	--	--	--	1	PPM	LB/DA	--	--	--
f. Nitrate-Nitrite (*as N*)		X	<0.081	<2.4	--	--	--	--	1	PPM	LB/DA	--	--	--

00022202

* Values are based on 2015 measured data (or as otherwise indicated).
** Values are based on Outfall 005 data in 2013 VPDES Permit Reissuance Application.

Interim Configuration:
Pond D Comingled Waters*

ITEM V-B CONTINUED FROM FRONT

1. POLLUTANT AND CAS NO. (if available)	2. MARK "X"		3. EFFLUENT							4. UNITS		5. INTAKE (optional)		
	a. BELIEVED PRESENT	b. BELIEVED ABSENT	a. MAXIMUM DAILY VALUE		b. MAXIMUM 30 DAY VALUE (if available)		c. LONG TERM AVRG. VALUE (if available)		d. NO. OF ANALYSES	a. CONCEN-TRATION	b. MASS	a. LONG TERM AVERAGE VALUE		b. NO. OF ANALYSES
			(1) CONCENTRATION	(2) MASS	(1) CONCENTRATION	(2) MASS	(1) CONCENTRATION	(2) MASS				(1) CONCENTRATION	(2) MASS	
g. Nitrogen, Total Organic (as N)		X	No Sample	--	--	--	--	--	0	PPM	LB/DA	--	--	--
h. Oil and Grease		X	<3	<90	--	--	--	--	1	PPM	LB/DA	--	--	--
i. Phosphorus (as P), Total (7723-14-0)		X	<0.06	<1.8	--	--	--	--	1	PPM	LB/DA	--	--	--
j. Radioactivity														
(1) Alpha, Total		X	No Sample	--	--	--	--	--	0	pCi/L	--	--	--	--
(2) Beta, Total		X	No Sample	--	--	--	--	--	0	pCi/L	--	--	--	--
(3) Radium, Total		X	No Sample	--	--	--	--	--	0	pCi/L	--	--	--	--
(4) Radium 226, Total		X	No Sample	--	--	--	--	--	0	pCi/L	--	--	--	--
k. Sulfate (as SO_4) (14808-79-8)	X		104	3100	--	--	--	--	1	PPM	LB/DA	--	--	--
l. Sulfide (as S)		X	<0.35	<11	--	--	--	--	1	PPM	LB/DA	--	--	--
m. Sulfite (as SO_3) (14265-45-3)		X	No Sample	--	--	--	--	--	0	PPM	LB/DA	--	--	--
n. Surfactants		X	No Sample	--	--	--	--	--	0	PPM	LB/DA	--	--	--
o. Aluminum, Total (7429-90-5)	X		0.10	3.0	--	--	--	--	1	PPM	LB/DA	--	--	--
p. Barium, Total (7440-39-3)	X		0.15	4.4	--	--	--	--	1	PPM	LB/DA	--	--	--
q. Boron, Total (7440-42-8)	X		0.47	14	--	--	--	--	1	PPM	LB/DA	--	--	--
r. Cobalt, Total (7440-48-4)		X	<0.00083	<0.03	--	--	--	--	1	PPM	LB/DA	--	--	--
s. Iron, Total (7439-89-6)	X		0.061	1.8	--	--	--	--	1	PPM	LB/DA	--	--	--
t. Magnesium, Total (7439-95-4)	X		15	440	--	--	--	--	1	PPM	LB/DA	--	--	--
u. Molybdenum, Total (7439-98-7)	X		0.05	1.5	--	--	--	--	1	PPM	LB/DA	--	--	--
v. Manganese, Total (7439-96-5)	X		0.037	1.1	--	--	--	--	1	PPM	LB/DA	--	--	--
w. Tin, Total (7440-31-5)		X	No Sample	--	--	--	--	--	0	PPM	LB/DA	--	--	--
x. Titanium, Total (7440-32-6)		X	No Sample	--	--	--	--	--	0	PPM	LB/DA	--	--	--

 CONTINUE ON PAGE V-3

* Values are based on 2015 measured data.

00022203

EPA I.D. NUMBER (*copy from Item 1 of Form 1*)	OUTFALL NUMBER
110000340774	005

Interim Configuration: Pond D Comingled Waters*

CONTINUED FROM PAGE 3 OF FORM 2-C

PART C - If you are a primary industry and this outfall contains process wastewater, refer to Table 2c-2 in the instructions to determine which of the GC/MS fractions you must test for. Mark "X" in column 2-a for all such GC/MS fractions that apply to your industry and for ALL toxic metals, cyanides, and total phenols. If you are not required to mark column 2-a (*secondary industries, nonprocess wastewater outfalls, and nonrequired GC/MS fractions*), mark "X" in column 2-b for each pollutant you know or have reason to believe is present. Mark "X" in column 2-c for each pollutant you believe is absent. If you mark column 2a for any pollutant, you must provide the results of at least one analysis for that pollutant. If you mark column 2b for any pollutant, you must provide the results of at least one analysis for that pollutant if you know or have reason to believe it will be discharged in concentrations of 10 ppb or greater. If you mark column 2b for acrolein, acrylonitrile, 2,4 dinitrophenol, or 2-methyl-4, 6 dinitrophenol, you must provide the results of at least one analysis for each of these pollutants which you know or have reason to believe that you discharge in concentrations of 100 ppb or greater. Otherwise, for pollutants for which you mark column 2b, you must either submit at least one analysis or briefly describe the reasons the pollutant is expected to be discharged. Note that there are 7 pages to this part; please review each carefully. Complete one table (*all 7 pages*) for each outfall. See instructions for additional details and requirements.

1. POLLUTANT AND CAS NUMBER (*if available*)	2. MARK "X"			3. EFFLUENT							4. UNITS		5. INTAKE (*optional*)		
	a. TESTING REQUIRED	b. BELIEVED PRESENT	c. BELIEVED ABSENT	a. MAXIMUM DAILY VALUE (1) CONCENTRATION	a. MAXIMUM DAILY VALUE (2) MASS	b. MAXIMUM 30 DAY VALUE (*if available*) (1) CONCENTRATION	b. MAXIMUM 30 DAY VALUE (*if available*) (2) MASS	c. LONG TERM AVRG. VALUE (*if available*) (1) CONCENTRATION	c. LONG TERM AVRG. VALUE (*if available*) (2) MASS	d. NO. OF ANALYSES	a. CONCEN-TRATION	b. MASS	a. LONG TERM AVERAGE VALUE (1) CONCENTRATION	a. LONG TERM AVERAGE VALUE (2) MASS	b. NO. OF ANALYSES
METALS, CYANIDE, AND TOTAL PHENOLS															
1M. Antimony, Total (7440-36-0)	X	X		0.0035	0.11	--	--	--	--	1	PPM	LB/DAY	--	--	--
2M. Arsenic, Total (7440-38-2)	X	X		0.019	0.56	--	--	--	--	1	PPM	LB/DAY	--	--	--
3M. Beryllium, Total (7440-41-7)	X		X	<0.0001	<0.01	--	--	--	--	1	PPM	LB/DAY	--	--	--
4M. Cadmium, Total (7440-43-9)	X		X	<0.00016	<0.01	--	--	--	--	1	PPM	LB/DAY	--	--	--
5M. Chromium, Total (7440-47-3)	X		X	<0.00033	<0.01	--	--	--	--	1	PPM	LB/DAY	--	--	--
6M. Copper, Total (7440-50-8)	X		X	<0.00083	<0.025	--	--	--	--	1	PPM	LB/DAY	--	--	--
7M. Lead, Total (7439-92-1)	X		X	<0.00033	<0.01	--	--	--	--	1	PPM	LB/DAY	--	--	--
8M. Mercury, Total (7439-97-6)	X		X	<0.00016	<0.01	--	--	--	--	1	PPM	LB/DAY	--	--	--
9M. Nickel, Total (7440-02-0)	X	X		0.0028	0.09	--	--	--	--	1	PPM	LB/DAY	--	--	--
10M. Selenium, Total (7782-49-2)	X	X		0.0056	0.17	--	--	--	--	1	PPM	LB/DAY	--	--	--
11M. Silver, Total (7440-22-4)	X		X	<0.00033	<0.01	--	--	--	--	1	PPM	LB/DAY	--	--	--
12M. Thallium, Total (7440-28-0)	X		X	<0.00016	<0.01	--	--	--	--	1	PPM	LB/DAY	--	--	--
13M. Zinc, Total (7440-66-6)	X		X	<0.01	<0.30	--	--	--	--	1	PPM	LB/DAY	--	--	--
14M. Cyanide, Total (57-12-5)	X		X	<0.00058	<0.02	--	--	--	--	1	PPM	LB/DAY	--	--	--
15M. Phenols, Total			X	No Sample	--	--	--	--	--	0	PPM	LB/DAY	--	--	--
DIOXIN															
2,3,7,8-Tetra-chlorodibenzo-P-Dioxin (1764-01-6)			X	DESCRIBE RESULTS No Sample											

* Values are based on 2015 measured data.

00022204

Interim Configuration:
Pond D Comingled Waters*

CONTINUED FROM THE FRONT

1. POLLUTANT AND CAS NUMBER (if available)	2. MARK "X"			3. EFFLUENT							4. UNITS		5. INTAKE (optional)		
	a. TESTING REQUIRED	b. BELIEVED PRESENT	c. BELIEVED ABSENT	a. MAXIMUM DAILY VALUE		b. MAXIMUM 30 DAY VALUE (if available)		c. LONG TERM AVRG. VALUE (if available)		d. NO. OF ANALYSES	a. CONCEN-TRATION	b. MASS	a. LONG TERM AVERAGE VALUE		b. NO. OF ANALYSES
				(1) CONCENTRATION	(2) MASS	(1) CONCENTRATION	(2) MASS	(1) CONCENTRATION	(2) MASS				(1) CONCENTRATION	(2) MASS	
GC/MS FRACTION – VOLATILE COMPOUNDS															
1V. Acrolein (107-02-8)	X		X	<2.4	<0.08	--	--	--	--	1	PPB	LB/DAY	--	--	--
2V. Acrylonitrile (107-13-1)	X		X	<0.89	<0.03	--	--	--	--	1	PPB	LB/DAY	--	--	--
3V. Benzene (71-43-2)	X		X	<0.16	<0.01	--	--	--	--	1	PPB	LB/DAY	--	--	--
4V. Bis (*Chloromethyl*) Ether (542-88-1)				*DELISTED 02-4-1981* ANALYSIS NOT REQUIRED FOR THIS PARAMETER											
5V. Bromoform (75-25-2)	X		X	<0.21	<0.01	--	--	--	--	1	PPB	LB/DAY	--	--	--
6V. Carbon Tetrachloride (56-23-5)	X		X	<0.24	<0.01	--	--	--	--	1	PPB	LB/DAY	--	--	--
7V. Chlorobenzene (108-90-7)	X		X	<0.11	<0.01	--	--	--	--	1	PPB	LB/DAY	--	--	--
8V. Chlorodibromomethane (124-48-1)	X		X	<0.22	<0.01	--	--	--	--	1	PPB	LB/DAY	--	--	--
9V. Chloroethane (75-00-3)			X	No Sample	--	--	--	--	--	0	PPB	LB/DAY	--	--	--
10V. 2-Chloroethylvinyl Ether (110-75-8)			X	No Sample	--	--	--	--	--	0	PPB	LB/DAY	--	--	--
11V. Chloroform (67-66-3)	X		X	<0.15	<0.01	--	--	--	--	1	PPB	LB/DAY	--	--	--
12V. Dichlorobromomethane (75-27-4)	X		X	<0.13	<0.01	--	--	--	--	1	PPB	LB/DAY	--	--	--
13V. Dichlorodifluoromethane (75-71-8)				*DELISTED 01-8-1981* ANALYSIS NOT REQUIRED FOR THIS PARAMETER											
14V. 1,1-Dichloroethane (75-34-3)			X	No Sample	--	--	--	--	--	0	PPB	LB/DAY	--	--	--
15V. 1,2-Dichloroethane (107-06-2)	X		X	<0.22	<0.01	--	--	--	--	1	PPB	LB/DAY	--	--	--
16V. 1,1-Dichloroethylene (75-35-4)	X		X	<0.17	<0.01	--	--	--	--	1	PPB	LB/DAY	--	--	--
17V. 1,2-Dichloropropane (78-87-5)	X		X	<0.24	<0.01	--	--	--	--	1	PPB	LB/DAY	--	--	--
18V. 1,3-Dichloropropylene (542-75-6)	X		X	<0.19	<0.01	--	--	--	--	1	PPB	LB/DAY	--	--	--
19V. Ethylbenzene (100-41-4)	X		X	<0.16	<0.01	--	--	--	--	1	PPB	LB/DAY	--	--	--
20V. Methyl Bromide (74-83-9)	X		X	<0.27	<0.01	--	--	--	--	1	PPB	LB/DAY	--	--	--
21V. Methyl Chloride (74-87-3)			X	No Sample	--	--	--	--	--	0	PPB	LB/DAY	--	--	--

 CONTINUE ON PAGE V-5

* Values are based on 2015 measured data.

00022205

Interim Configuration:
Pond D Comingled Waters*

CONTINUED FROM PAGE V-4

1. POLLUTANT AND CAS NUMBER (if available)	2. MARK "X"			3. EFFLUENT							4. UNITS		5. INTAKE (optional)		
	a. TESTING REQUIRED	b. BELIEVED PRESENT	c. BELIEVED ABSENT	a. MAXIMUM DAILY VALUE		b. MAXIMUM 30 DAY VALUE (if available)		c. LONG TERM AVRG. VALUE (if available)		d. NO. OF ANALYSES	a. CONCEN-TRATION	b. MASS	a. LONG TERM AVERAGE VALUE		b. NO. OF ANALYSES
				(1) CONCENTRATION	(2) MASS	(1) CONCENTRATION	(2) MASS	(1) CONCENTRATION	(2) MASS				(1) CONCENTRATION	(2) MASS	
GC/MS FRACTION – VOLATILE COMPOUNDS (continued)															
22V. Methylene Chloride (75-09-2)	X		X	<0.32	<0.01	--	--	--	--	1	PPB	LB/DAY	--	--	--
23V. 1,1,2,2-Tetrachloroethane (79-34-5)	X		X	<0.22	<0.01	--	--	--	--	1	PPB	LB/DAY	--	--	--
24V. Tetrachloro-ethylene (127-18-4)	X		X	<0.26	<0.01	--	--	--	--	1	PPB	LB/DAY	--	--	--
25V. Toluene (108-88-3)	X		X	<0.12	<0.01	--	--	--	--	1	PPB	LB/DAY	--	--	--
26V. 1,2-Trans-Dichloroethylene (156-60-5)	X		X	<0.12	<0.01	--	--	--	--	1	PPB	LB/DAY	--	--	--
27V. 1,1,1-Trichloro-ethane (71-55-6)			X	No Sample	--	--	--	--	--	0	PPB	LB/DAY	--	--	--
28V. 1,1,2-Trichloro-ethane (79-00-5)	X		X	<0.3	<0.1	--	--	--	--	1	PPB	LB/DAY	--	--	--
29V Trichloro-ethylene (79-01-6)	X		X	<0.21	<0.01	--	--	--	--	1	PPB	LB/DAY	--	--	--
30V. Trichloro-fluoromethane (75-69-4)				*DELISTED 01-8-1981* ANALYSIS NOT REQUIRED FOR THIS PARAMETER											
31V. Vinyl Chloride (75-01-4)	X		X	<0.24	<0.01	--	--	--	--	1	PPB	LB/DAY	--	--	--
GC/MS FRACTION – ACID COMPOUNDS															
1A. 2-Chlorophenol (95-57-8)	X		X	<0.59	<0.02	--	--	--	--	1	PPB	LB/DAY	--	--	--
2A. 2,4-Dichloro-phenol (120-83-2)	X		X	<0.46	<0.02	--	--	--	--	1	PPB	LB/DAY	--	--	--
3A. 2,4-Dimethyl-phenol (105-67-9)	X		X	<2.9	<0.09	--	--	--	--	1	PPB	LB/DAY	--	--	--
4A. 4,6-Dinitro-O-Cresol (534-52-1)	X		X	<1.3	<0.04	--	--	--	--	1	PPB	LB/DAY	--	--	--
5A. 2,4-Dinitro-phenol (51-28-5)	X		X	<2.3	<0.07	--	--	--	--	1	PPB	LB/DAY	--	--	--
6A. 2-Nitrophenol (88-75-5)			X	No Sample	--	--	--	--	--	0	PPB	LB/DAY	--	--	--
7A. 4-Nitrophenol (100-02-7)			X	No Sample	--	--	--	--	--	0	PPB	LB/DAY	--	--	--
8A. P-Chloro-M-Cresol (59-50-7)			X	No Sample	--	--	--	--	--	0	PPB	LB/DAY	--	--	--
9A. Pentachloro-phenol (87-86-5)	X		X	<1.8	<0.06	--	--	--	--	1	PPB	LB/DAY	--	--	--
10A. Phenol (108-95-2)	X		X	<0.23	<0.01	--	--	--	--	1	PPB	LB/DAY	--	--	--
11A. 2,4,6-Trichloro-phenol (88-05-2)	X		X	<0.36	<0.02	--	--	--	--	1	PPB	LB/DAY	--	--	--

CONTINUE ON REVERSE

* Values are based on 2015 measured data.

00022206

Interim Configuration:
Pond D Comingled Waters*

CONTINUED FROM THE FRONT

1. POLLUTANT AND CAS NUMBER (if available)	2. MARK "X"			3. EFFLUENT							4. UNITS		5. INTAKE (optional)		
	a. TESTING REQUIRED	b. BELIEVED PRESENT	c. BELIEVED ABSENT	a. MAXIMUM DAILY VALUE		b. MAXIMUM 30 DAY VALUE (if available)		c. LONG TERM AVRG. VALUE (if available)		d. NO. OF ANALYSES	a. CONCEN-TRATION	b. MASS	a. LONG TERM AVERAGE VALUE		b. NO. OF ANALYSES
				(1) CONCENTRATION	(2) MASS	(1) CONCENTRATION	(2) MASS	(1) CONCENTRATION	(2) MASS				(1) CONCENTRATION	(2) MASS	
GC/MS FRACTION – BASE/NEUTRAL COMPOUNDS															
1B. Acenaphthene (83-32-9)	X		X	<0.33	<0.01	--	--	--	--	1	PPB	LB/DAY	--	--	--
2B. Acenaphtylene (208-96-8)			X	No Sample	--	--	--	--	--	0	PPB	LB/DAY	--	--	--
3B. Anthracene (120-12-7)	X		X	<0.34	<0.01	--	--	--	--	1	PPB	LB/DAY	--	--	--
4B. Benzidine (92-87-5)	X		X	<22.4	<0.66	--	--	--	--	1	PPB	LB/DAY	--	--	--
5B. Benzo (a) Anthracene (56-55-3)	X		X	<0.3	<0.1	--	--	--	--	1	PPB	LB/DAY	--	--	--
6B. Benzo (a) Pyrene (50-32-8)	X		X	<0.36	<0.02	--	--	--	--	1	PPB	LB/DAY	--	--	--
7B. 3,4-Benzo-fluoranthene (205-99-2)	X		X	<0.41	<0.02	--	--	--	--	1	PPB	LB/DAY	--	--	--
8B. Benzo (ghi) Perylene (191-24-2)			X	No Sample	--	--	--	--	--	0	PPB	LB/DAY	--	--	--
9B. Benzo (k) Fluoranthene (207-08-9)	X		X	<0.38	<0.02	--	--	--	--	1	PPB	LB/DAY	--	--	--
10B. Bis (2-Chloro-ethoxy) Methane (111-91-1)			X	No Sample	--	--	--	--	--	0	PPB	LB/DAY	--	--	--
11B. Bis (2-Chloro-ethyl) Ether (111-44-4)	X		X	<0.35	<0.02	--	--	--	--	1	PPB	LB/DAY	--	--	--
12B. Bis (2-Chloroisopropyl) Ether (102-80-1)	X		X	<0.5	<0.02	--	--	--	--	1	PPB	LB/DAY	--	--	--
13B. Bis (2-Ethyl-hexyl) Phthalate (117-81-7)	X		X	<0.35	<0.02	--	--	--	--	1	PPB	LB/DAY	--	--	--
14B. 4-Bromophenyl Phenyl Ether (101-55-3)			X	No Sample	--	--	--	--	--	0	PPB	LB/DAY	--	--	--
15B. Butyl Benzyl Phthalate (85-68-7)	X		X	<0.33	<0.01	--	--	--	--	1	PPB	LB/DAY	--	--	--
16B. 2-Chloro-naphthalene (91-58-7)	X		X	<0.34	<0.01	--	--	--	--	1	PPB	LB/DAY	--	--	--
17B. 4-Chloro-phenyl Phenyl Ether (7005-72-3)			X	No Sample	--	--	--	--	--	0	PPB	LB/DAY	--	--	--
18B. Chrysene (218-01-9)	X		X	<0.35	<0.02	--	--	--	--	1	PPB	LB/DAY	--	--	--
19B. Dibenzo (a,h) Anthracene (53-70-3)	X		X	<0.29	<0.01	--	--	--	--	1	PPB	LB/DAY	--	--	--
20B. 1,2-Dichloro-benzene (95-50-1)	X		X	<0.2	<0.1	--	--	--	--	1	PPB	LB/DAY	--	--	--
21B. 1,3-Di-chloro-benzene (541-73-1)	X		X	<0.14	<0.01	--	--	--	--	1	PPB	LB/DAY	--	--	--

CONTINUE ON PAGE V-7

* Values are based on 2015 measured data.

00022207

Interim Configuration:
Pond D Comingled Waters*

CONTINUED FROM PAGE V-6

1. POLLUTANT AND CAS NUMBER (if available)	2. MARK "X"			3. EFFLUENT							4. UNITS		5. INTAKE (optional)		
	a. TESTING REQUIRED	b. BELIEVED PRESENT	c. BELIEVED ABSENT	a. MAXIMUM DAILY VALUE		b. MAXIMUM 30 DAY VALUE (if available)		c. LONG TERM AVRG. VALUE (if available)		d. NO. OF ANALYSES	a. CONCEN-TRATION	b. MASS	a. LONG TERM AVERAGE VALUE		b. NO. OF ANALYSES
				(1) CONCENTRATION	(2) MASS	(1) CONCENTRATION	(2) MASS	(1) CONCENTRATION	(2) MASS				(1) CONCENTRATION	(2) MASS	
GC/MS FRACTION – BASE/NEUTRAL COMPOUNDS (continued)															
22B. 1,4-Dichloro-benzene (106-46-7)	X		X	<0.15	<0.01	--	--	--	--	1	PPB	LB/DAY	--	--	--
23B. 3,3-Dichloro-benzidine (91-94-1)	X		X	<2.8	<0.09	--	--	--	--	1	PPB	LB/DAY	--	--	--
24B. Diethyl Phthalate (84-66-2)	X		X	<0.3	<0.1	--	--	--	--	1	PPB	LB/DAY	--	--	--
25B. Dimethyl Phthalate (131-11-3)	X		X	<0.38	<0.02	--	--	--	--	1	PPB	LB/DAY	--	--	--
26B. Di-N-Butyl Phthalate (84-74-2)	X		X	<0.31	<0.01	--	--	--	--	1	PPB	LB/DAY	--	--	--
27B. 2,4-Dinitro-toluene (121-14-2)	X		X	<0.38	<0.02	--	--	--	--	1	PPB	LB/DAY	--	--	--
28B. 2,6-Dinitro-toluene (606-20-2)			X	No Sample	--	--	--	--	--	0	PPB	LB/DAY	--	--	--
29B. Di-N-Octyl Phthalate (117-84-0)			X	No Sample	--	--	--	--	--	0	PPB	LB/DAY	--	--	--
30B. 1,2-Diphenyl-hydrazine (as Azo-benzene) (122-66-7)	X		X	<0.32	<0.01	--	--	--	--	1	PPB	LB/DAY	--	--	--
31B. Fluoranthene (206-44-0)	X		X	<0.25	<0.01	--	--	--	--	1	PPB	LB/DAY	--	--	--
32B. Fluorene (86-73-7)	X		X	<0.37	<0.02	--	--	--	--	1	PPB	LB/DAY	--	--	--
33B. Hexachloro-benzene (118-74-1)	X		X	<0.3	<0.1	--	--	--	--	1	PPB	LB/DAY	--	--	--
34B. Hexachloro-butadiene (87-68-3)	X		X	<0.29	<0.01	--	--	--	--	1	PPB	LB/DAY	--	--	--
35B. Hexachloro-cyclopentadiene (77-47-4)	X		X	<1	<0.1	--	--	--	--	1	PPB	LB/DAY	--	--	--
36B Hexachloro-ethane (67-72-1)	X		X	<0.32	<0.01	--	--	--	--	1	PPB	LB/DAY	--	--	--
37B. Indeno (1,2,3-cd) Pyrene (193-39-5)	X		X	<0.29	<0.01	--	--	--	--	1	PPB	LB/DAY	--	--	--
38B. Isophorone (78-59-1)	X		X	<0.38	<0.02	--	--	--	--	1	PPB	LB/DAY	--	--	--
39B. Naphthalene (91-20-3)			X	No Sample	--	--	--	--	--	0	PPB	LB/DAY	--	--	--
40B. Nitrobenzene (98-95-3)	X		X	<0.7	<0.1	--	--	--	--	1	PPB	LB/DAY	--	--	--
41B. N-Nitro-sodimethylamine (62-75-9)	X		X	<0.45	<0.02	--	--	--	--	1	PPB	LB/DAY	--	--	--
42B. N-Nitrosodi-N-Propylamine (621-64-7)	X		X	<0.54	<0.02	--	--	--	--	1	PPB	LB/DAY	--	--	--

CONTINUE ON REVERSE

* Values are based on 2015 measured data.

00022208

Interim Configuration:
Pond D Comingled Waters*

CONTINUED FROM THE FRONT

1. POLLUTANT AND CAS NUMBER (if available)	2. MARK "X"			3. EFFLUENT							4. UNITS		5. INTAKE (optional)		
	a. TESTING REQUIRED	b. BELIEVED PRESENT	c. BELIEVED ABSENT	a. MAXIMUM DAILY VALUE		b. MAXIMUM 30 DAY VALUE (if available)		c. LONG TERM AVRG. VALUE (if available)		d. NO. OF ANALYSES	a. CONCEN-TRATION	b. MASS	a. LONG TERM AVERAGE VALUE		b. NO. OF ANALYSES
				(1) CONCENTRATION	(2) MASS	(1) CONCENTRATION	(2) MASS	(1) CONCENTRATION	(2) MASS				(1) CONCENTRATION	(2) MASS	
GC/MS FRACTION – BASE/NEUTRAL COMPOUNDS (continued)															
43B. N-Nitro-sodiphenylamine (86-30-6)	X		X	<1	<0.1	--	--	--	--	1	PPB	LB/DAY	--	--	--
44B. Phenanthrene (85-01-8)			X	No Sample	--	--	--	--	--	0	PPB	LB/DAY	--	--	--
45B. Pyrene (129-00-0)	X		X	<0.35	<0.02	--	--	--	--	1	PPB	LB/DAY	--	--	--
46B. 1,2,4-Tri-chlorobenzene (120-82-1)	X		X	<0.26	<0.01	--	--	--	--	1	PPB	LB/DAY	--	--	--
GC/MS FRACTION – PESTICIDES															
1P. Aldrin (309-00-2)	X		X	<0.0007	<0.01	--	--	--	--	1	PPB	LB/DAY	--	--	--
2P. α-BHC (319-84-6)	X		X	<0.00014	<0.01	--	--	--	--	1	PPB	LB/DAY	--	--	--
3P. β-BHC (319-85-7)	X		X	<0.00017	<0.01	--	--	--	--	1	PPB	LB/DAY	--	--	--
4P. γ-BHC (58-89-9)	X		X	<0.00015	<0.01	--	--	--	--	1	PPB	LB/DAY	--	--	--
5P. δ-BHC (319-86-8)	X		X	<0.00025	<0.01	--	--	--	--	1	PPB	LB/DAY	--	--	--
6P. Chlordane (57-74-9)	X		X	<0.013	<0.01	--	--	--	--	1	PPB	LB/DAY	--	--	--
7P. 4,4'-DDT (50-29-3)	X		X	<0.00024	<0.01	--	--	--	--	1	PPB	LB/DAY	--	--	--
8P. 4,4'-DDE (72-55-9)	X		X	<0.00017	<0.01	--	--	--	--	1	PPB	LB/DAY	--	--	--
9P. 4,4'-DDD (72-54-8)	X		X	<0.00017	<0.01	--	--	--	--	1	PPB	LB/DAY	--	--	--
10P. Dieldrin (60-57-1)	X		X	<0.00014	<0.01	--	--	--	--	1	PPB	LB/DAY	--	--	--
11P. α-Enosulfan (115-29-7)	X		X	<0.00029	<0.01	--	--	--	--	1	PPB	LB/DAY	--	--	--
12P. β-Endosulfan (115-29-7)	X		X	<0.00015	<0.01	--	--	--	--	1	PPB	LB/DAY	--	--	--
13P. Endosulfan Sulfate (1031-07-8)	X		X	<0.0003	<0.01	--	--	--	--	1	PPB	LB/DAY	--	--	--
14P. Endrin (72-20-8)	X		X	<0.00015	<0.01	--	--	--	--	1	PPB	LB/DAY	--	--	--
15P. Endrin Aldehyde (7421-93-4)	X		X	<0.00032	<0.01	--	--	--	--	1	PPB	LB/DAY	--	--	--
16P. Heptachlor (76-44-8)	X		X	<0.0004	<0.01	--	--	--	--	1	PPB	LB/DAY	--	--	--

 CONTINUE ON PAGE V-9

* Values are based on 2015 measured data.

00022209

EPA I.D. NUMBER (*copy from Item 1 of Form 1*)	OUTFALL NUMBER
110000340774	005

Interim Configuration: Pond D Comingled Waters*

CONTINUED FROM PAGE V-8

1. POLLUTANT AND CAS NUMBER (*if available*)	2. MARK "X"			3. EFFLUENT							4. UNITS		5. INTAKE (*optional*)		
	a. TESTING REQUIRED	b. BELIEVED PRESENT	c. BELIEVED ABSENT	a. MAXIMUM DAILY VALUE		b. MAXIMUM 30 DAY VALUE (*if available*)		c. LONG TERM AVRG. VALUE (*if available*)		d. NO. OF ANALYSES	a. CONCEN-TRATION	b. MASS	a. LONG TERM AVERAGE VALUE		b. NO. OF ANALYSES
				(1) CONCENTRATION	(2) MASS	(1) CONCENTRATION	(2) MASS	(1) CONCENTRATION	(2) MASS				(1) CONCENTRATION	(2) MASS	
GC/MS FRACTION – PESTICIDES (*continued*)															
17P. Heptachlor Epoxide (1024-57-3)	X		X	<0.00017	<0.01	--	--	--	--	1	PPB	LB/DAY	--	--	--
18P. PCB-1242 (53469-21-9)			X	No Sample	--	--	--	--	--	0	PPB	LB/DAY	--	--	--
19P. PCB-1254 (11097-69-1)			X	No Sample	--	--	--	--	--	0	PPB	LB/DAY	--	--	--
20P. PCB-1221 (11104-28-2)			X	No Sample	--	--	--	--	--	0	PPB	LB/DAY	--	--	--
21P. PCB-1232 (11141-16-5)			X	No Sample	--	--	--	--	--	0	PPB	LB/DAY	--	--	--
22P. PCB-1248 (12672-29-6)			X	No Sample	--	--	--	--	--	0	PPB	LB/DAY	--	--	--
23P. PCB-1260 (11096-82-5)			X	No Sample	--	--	--	--	--	0	PPB	LB/DAY	--	--	--
24P. PCB-1016 (12674-11-2)			X	No Sample	--	--	--	--	--	0	PPB	LB/DAY	--	--	--
25P. Toxaphene (8001-35-2)	X		X	<0.01	<0.01	--	--	--	--	1	PPB	LB/DAY	--	--	--

* Values are based on 2015 measured data.

00022210

PLEASE PRINT OR TYPE IN THE UNSHADED AREAS ONLY. You may report some or all of this information on separate sheets (*use the same format*) instead of completing these pages. SEE INSTRUCTIONS.

EPA I.D. NUMBER (*copy from Item 1 of Form 1*): 110000340774

Interim Configuration: Ash Dewatering and Contact Waters*

V. INTAKE AND EFFLUENT CHARACTERISTICS *(continued from page 3 of Form 2-C)* [redacted] OUTFALL NO. 005

PART A – You must provide the results of at least one analysis for every pollutant in this table. Complete one table for each outfall. See instructions for additional details.

1. POLLUTANT	2. EFFLUENT a. MAXIMUM DAILY VALUE (1) CONCENTRATION	(2) MASS	b. MAXIMUM 30 DAY VALUE (*if available*) (1) CONCENTRATION	(2) MASS	c. LONG TERM AVRG. VALUE (*if available*) (1) CONCENTRATION	(2) MASS	d. NO. OF ANALYSES	3. UNITS (*specify if blank*) a. CONCEN-TRATION	b. MASS	4. INTAKE (*optional*) a. LONG TERM AVERAGE VALUE (1) CONCENTRATION	(2) MASS	b. NO. OF ANALYSES
a. Biochemical Oxygen Demand (*BOD*)	<0.8	<30	--	--	--	--	1	PPM	LB/DAY	--	--	--
b. Chemical Oxygen Demand (*COD*)	No Sample	--	--	--	--	--	0	PPM	LB/DAY	--	--	--
c. Total Organic Carbon (*TOC*)	No Sample	--	--	--	--	--	0	PPM	LB/DAY	--	--	--
d. Total Suspended Solids (*TSS*)	23	680	--	--	--	--	1	PPM	LB/DAY	--	--	--
e. Ammonia (*as N*)	<0.27	<7.9	--	--	--	--	1	PPM	LB/DAY	--	--	--
f. Flow **	VALUE 3.5		VALUE 2.53		VALUE 0.98		70	MGD	--	VALUE --		--
g. Temperature (*winter*)	VALUE No Sample		VALUE --		VALUE --		0	°C		VALUE --		--
h. Temperature (*summer*)	VALUE 19.34		VALUE --		VALUE --		1	°C		VALUE --		--
i. pH	MINIMUM No Sample	MAXIMUM 7.6	MINIMUM --	MAXIMUM --			1	STANDARD UNITS				

PART B – Mark "X" in column 2-a for each pollutant you know or have reason to believe is present. Mark "X" in column 2-b for each pollutant you believe to be absent. If you mark column 2a for any pollutant which is limited either directly, or indirectly but expressly, in an effluent limitations guideline, you must provide the results of at least one analysis for that pollutant. For other pollutants for which you mark column 2a, you must provide quantitative data or an explanation of their presence in your discharge. Complete one table for each outfall. See the instructions for additional details and requirements.

1. POLLUTANT AND CAS NO. (*if available*)	2. MARK "X" a. BELIEVED PRESENT	b. BELIEVED ABSENT	3. EFFLUENT a. MAXIMUM DAILY VALUE (1) CONCENTRATION	(2) MASS	b. MAXIMUM 30 DAY VALUE (*if available*) (1) CONCENTRATION	(2) MASS	c. LONG TERM AVRG. VALUE (*if available*) (1) CONCENTRATION	(2) MASS	d. NO. OF ANALYSES	4. UNITS a. CONCEN-TRATION	b. MASS	5. INTAKE (*optional*) a. LONG TERM AVERAGE VALUE (1) CONCENTRATION	(2) MASS	b. NO. OF ANALYSES
a. Bromide (24959-67-9)		X	No Sample	--	--	--	--	--	0	PPM	LB/DA	--	--	--
b. Chlorine, Total Residual	X		0.01	0.30	--	--	--	--	1	PPM	LB/DA	--	--	--
c. Color	X		No Sample	--	--	--	--	--	0	PCU	--	--	--	--
d. Fecal Coliform		X	No Sample	--	--	--	--	--	0	COL/0.1L	--	--	--	--
e. Fluoride (16984-48-8)	X		3	90	--	--	--	--	1	PPM	LB/DA	--	--	--
f. Nitrate-Nitrite (*as N*)		X	<0.20	<5.9	--	--	--	--	1	PPM	LB/DA	--	--	--

* Values are based on weighted average of the 2015 measured data for Pond E ash dewatering well points and Pond E contact waters (or as otherwise indicated).

** Values are based on Outfall 005 data in 2013 VPDES Permit Reissuance Application.

00022211

Interim Configuration: Ash Dewatering and Contact Waters*

ITEM V-B CONTINUED FROM FRONT

1. POLLUTANT AND CAS NO. (if available)	2. MARK "X"		3. EFFLUENT							4. UNITS		5. INTAKE (optional)		
	a. BELIEVED PRESENT	b. BELIEVED ABSENT	a. MAXIMUM DAILY VALUE		b. MAXIMUM 30 DAY VALUE (if available)		c. LONG TERM AVRG. VALUE (if available)		d. NO. OF ANALYSES	a. CONCEN-TRATION	b. MASS	a. LONG TERM AVERAGE VALUE		b. NO. OF ANALYSES
			(1) CONCENTRATION	(2) MASS	(1) CONCENTRATION	(2) MASS	(1) CONCENTRATION	(2) MASS				(1) CONCENTRATION	(2) MASS	
g. Nitrogen, Total Organic (as N)		X	No Sample	--	--	--	--	--	0	PPM	LB/DA	--	--	--
h. Oil and Grease		X	<2	<60	--	--	--	--	1	PPM	LB/DA	--	--	--
i. Phosphorus (as P), Total (7723-14-0)		X	<0.33	<9.7	--	--	--	--	1	PPM	LB/DA	--	--	--
j. Radioactivity														
(1) Alpha, Total		X	No Sample	--	--	--	--	--	0	pCi/L	--	--	--	--
(2) Beta, Total		X	No Sample	--	--	--	--	--	0	pCi/L	--	--	--	--
(3) Radium, Total		X	No Sample	--	--	--	--	--	0	pCi/L	--	--	--	--
(4) Radium 226, Total		X	No Sample	--	--	--	--	--	0	pCi/L	--	--	--	--
k. Sulfate (as SO_4) (14808-79-8)	X		26.4	780	--	--	--	--	1	PPM	LB/DA	--	--	--
l. Sulfide (as S)		X	<0.35	<11	--	--	--	--	1	PPM	LB/DA	--	--	--
m. Sulfite (as SO_3) (14265-45-3)		X	No Sample	--	--	--	--	--	0	PPM	LB/DA	--	--	--
n. Surfactants		X	No Sample	--	--	--	--	--	0	PPM	LB/DA	--	--	--
o. Aluminum, Total (7429-90-5)	X		0.07	2.1	--	--	--	--	1	PPM	LB/DA	--	--	--
p. Barium, Total (7440-39-3)	X		0.4	20	--	--	--	--	1	PPM	LB/DA	--	--	--
q. Boron, Total (7440-42-8)	X		1.2	36	--	--	--	--	1	PPM	LB/DA	--	--	--
r. Cobalt, Total (7440-48-4)	X		0.015	0.44	--	--	--	--	1	PPM	LB/DA	--	--	--
s. Iron, Total (7439-89-6)	X		5.5	170	--	--	--	--	1	PPM	LB/DA	--	--	--
t. Magnesium, Total (7439-95-4)	X		27.3	800	--	--	--	--	1	PPM	LB/DA	--	--	--
u. Molybdenum, Total (7439-98-7)	X		0.091	2.7	--	--	--	--	1	PPM	LB/DA	--	--	--
v. Manganese, Total (7439-96-5)	X		0.69	21	--	--	--	--	1	PPM	LB/DA	--	--	--
w. Tin, Total (7440-31-5)		X	No Sample	--	--	--	--	--	0	PPM	LB/DA	--	--	--
x. Titanium, Total (7440-32-6)		X	No Sample	--	--	--	--	--	0	PPM	LB/DA	--	--	--

 CONTINUE ON PAGE V-3

* Values are based on weighted average of the 2015 measured data for Pond E ash dewatering well points and Pond E contact waters.

00022212

EPA I.D. NUMBER (*copy from Item 1 of Form 1*)	OUTFALL NUMBER
110000340774	005

Interim Configuration: Ash Dewatering and Contact Waters*

CONTINUED FROM PAGE 3 OF FORM 2-C

PART C - If you are a primary industry and this outfall contains process wastewater, refer to Table 2c-2 in the instructions to determine which of the GC/MS fractions you must test for. Mark "X" in column 2-a for all such GC/MS fractions that apply to your industry and for ALL toxic metals, cyanides, and total phenols. If you are not required to mark column 2-a (*secondary industries, nonprocess wastewater outfalls, and nonrequired GC/MS fractions*), mark "X" in column 2-b for each pollutant you know or have reason to believe is present. Mark "X" in column 2-c for each pollutant you believe is absent. If you mark column 2a for any pollutant, you must provide the results of at least one analysis for that pollutant. If you mark column 2b for any pollutant, you must provide the results of at least one analysis for that pollutant if you know or have reason to believe it will be discharged in concentrations of 10 ppb or greater. If you mark column 2b for acrolein, acrylonitrile, 2,4 dinitrophenol, or 2-methyl-4, 6 dinitrophenol, you must provide the results of at least one analysis for each of these pollutants which you know or have reason to believe that you discharge in concentrations of 100 ppb or greater. Otherwise, for pollutants for which you mark column 2b, you must either submit at least one analysis or briefly describe the reasons the pollutant is expected to be discharged. Note that there are 7 pages to this part; please review each carefully. Complete one table (*all 7 pages*) for each outfall. See instructions for additional details and requirements.

1. POLLUTANT AND CAS NUMBER (*if available*)	2. MARK "X"			3. EFFLUENT							4. UNITS		5. INTAKE (*optional*)		
	a. TESTING REQUIRED	b. BELIEVED PRESENT	c. BELIEVED ABSENT	a. MAXIMUM DAILY VALUE (1) CONCENTRATION	a. MAXIMUM DAILY VALUE (2) MASS	b. MAXIMUM 30 DAY VALUE (*if available*) (1) CONCENTRATION	b. MAXIMUM 30 DAY VALUE (*if available*) (2) MASS	c. LONG TERM AVRG. VALUE (*if available*) (1) CONCENTRATION	c. LONG TERM AVRG. VALUE (*if available*) (2) MASS	d. NO. OF ANALYSES	a. CONCEN-TRATION	b. MASS	a. LONG TERM AVERAGE VALUE (1) CONCENTRATION	a. LONG TERM AVERAGE VALUE (2) MASS	b. NO. OF ANALYSES
METALS, CYANIDE, AND TOTAL PHENOLS															
1M. Antimony, Total (7440-36-0)	X		X	<0.0008	<0.03	--	--	--	--	1	PPM	LB/DAY	--	--	--
2M. Arsenic, Total (7440-38-2)	X	X		0.96	29	--	--	--	--	1	PPM	LB/DAY	--	--	--
3M. Beryllium, Total (7440-41-7)	X		X	<0.0001	<0.01	--	--	--	--	1	PPM	LB/DAY	--	--	--
4M. Cadmium, Total (7440-43-9)	X		X	<0.00016	<0.01	--	--	--	--	1	PPM	LB/DAY	--	--	--
5M. Chromium, Total (7440-47-3)	X		X	<0.00033	<0.01	--	--	--	--	1	PPM	LB/DAY	--	--	--
6M. Copper, Total (7440-50-8)	X		X	<0.00083	<0.03	--	--	--	--	1	PPM	LB/DAY	--	--	--
7M. Lead, Total (7439-92-1)	X		X	<0.00033	<0.01	--	--	--	--	1	PPM	LB/DAY	--	--	--
8M. Mercury, Total (7439-97-6)	X		X	<0.00016	<0.01	--	--	--	--	1	PPM	LB/DAY	--	--	--
9M. Nickel, Total (7440-02-0)	X	X		0.0070	0.21	--	--	--	--	1	PPM	LB/DAY	--	--	--
10M. Selenium, Total (7782-49-2)	X		X	<0.0014	<0.05	--	--	--	--	1	PPM	LB/DAY	--	--	--
11M. Silver, Total (7440-22-4)	X		X	<0.00033	<0.01	--	--	--	--	1	PPM	LB/DAY	--	--	--
12M. Thallium, Total (7440-28-0)	X		X	<0.00016	<0.01	--	--	--	--	1	PPM	LB/DAY	--	--	--
13M. Zinc, Total (7440-66-6)	X	X		0.02	0.59	--	--	--	--	1	PPM	LB/DAY	--	--	--
14M. Cyanide, Total (57-12-5)	X		X	<0.00058	<0.02	--	--	--	--	1	PPM	LB/DAY	--	--	--
15M. Phenols, Total			X	No Sample	--	--	--	--	--	0	PPM	LB/DAY	--	--	--
DIOXIN															
2,3,7,8-Tetra-chlorodibenzo-P-Dioxin (1764-01-6)			X	DESCRIBE RESULTS No Sample											

* Values are based on weighted average of the 2015 measured data for Pond E ash dewatering well points and Pond E contact waters.

00022213

Interim Configuration: Ash Dewatering and Contact Waters*

CONTINUED FROM THE FRONT

1. POLLUTANT AND CAS NUMBER (*if available*)	2. MARK "X"			3. EFFLUENT							4. UNITS		5. INTAKE (*optional*)		
	a. TESTING REQUIRED	b. BELIEVED PRESENT	c. BELIEVED ABSENT	a. MAXIMUM DAILY VALUE		b. MAXIMUM 30 DAY VALUE (*if available*)		c. LONG TERM AVRG. VALUE (*if available*)		d. NO. OF ANALYSES	a. CONCEN-TRATION	b. MASS	a. LONG TERM AVERAGE VALUE		b. NO. OF ANALYSES
				(1) CONCENTRATION	(2) MASS	(1) CONCENTRATION	(2) MASS	(1) CONCENTRATION	(2) MASS				(1) CONCENTRATION	(2) MASS	
GC/MS FRACTION – VOLATILE COMPOUNDS															
1V. Accrolein (107-02-8)	X		X	<2.4	<0.08	--	--	--	--	1	PPB	LB/DAY	--	--	--
2V. Acrylonitrile (107-13-1)	X		X	<0.89	<0.03	--	--	--	--	1	PPB	LB/DAY	--	--	--
3V. Benzene (71-43-2)	X		X	<0.16	<0.01	--	--	--	--	1	PPB	LB/DAY	--	--	--
4V. Bis (*Chloromethyl*) Ether (542-88-1)				*DELISTED 02-4-1981* ANALYSIS NOT REQUIRED FOR THIS PARAMETER											
5V. Bromoform (75-25-2)	X		X	<0.21	<0.01	--	--	--	--	1	PPB	LB/DAY	--	--	--
6V. Carbon Tetrachloride (56-23-5)	X		X	<0.24	<0.01	--	--	--	--	1	PPB	LB/DAY	--	--	--
7V. Chlorobenzene (108-90-7)	X		X	<0.11	<0.01	--	--	--	--	1	PPB	LB/DAY	--	--	--
8V. Chlorodibromomethane (124-48-1)	X		X	<0.22	<0.01	--	--	--	--	1	PPB	LB/DAY	--	--	--
9V. Chloroethane (75-00-3)			X	No Sample	--	--	--	--	--	0	PPB	LB/DAY	--	--	--
10V. 2-Chloroethylvinyl Ether (110-75-8)			X	No Sample	--	--	--	--	--	0	PPB	LB/DAY	--	--	--
11V. Chloroform (67-66-3)	X		X	<0.15	<0.01	--	--	--	--	1	PPB	LB/DAY	--	--	--
12V. Dichlorobromomethane (75-27-4)	X		X	<0.13	<0.01	--	--	--	--	1	PPB	LB/DAY	--	--	--
13V. Dichlorodifluoromethane (75-71-8)				*DELISTED 01-8-1981* ANALYSIS NOT REQUIRED FOR THIS PARAMETER											
14V. 1,1-Dichloroethane (75-34-3)			X	No Sample	--	--	--	--	--	0	PPB	LB/DAY	--	--	--
15V. 1,2-Dichloroethane (107-06-2)	X		X	<0.22	<0.01	--	--	--	--	1	PPB	LB/DAY	--	--	--
16V. 1,1-Dichloroethylene (75-35-4)	X		X	<0.17	<0.01	--	--	--	--	1	PPB	LB/DAY	--	--	--
17V. 1,2-Dichloropropane (78-87-5)	X		X	<0.24	<0.01	--	--	--	--	1	PPB	LB/DAY	--	--	--
18V. 1,3-Dichloropropylene (542-75-6)	X		X	<0.19	<0.01	--	--	--	--	1	PPB	LB/DAY	--	--	--
19V. Ethylbenzene (100-41-4)	X		X	<0.16	<0.01	--	--	--	--	1	PPB	LB/DAY	--	--	--
20V. Methyl Bromide (74-83-9)	X		X	<0.27	<0.01	--	--	--	--	1	PPB	LB/DAY	--	--	--
21V. Methyl Chloride (74-87-3)			X	No Sample	--	--	--	--	--	0	PPB	LB/DAY	--	--	--

 CONTINUE ON PAGE V-5

* Values are based on weighted average of the 2015 measured data for Pond E ash dewatering well points and Pond E contact waters.

00022214

Interim Configuration: Ash Dewatering and Contact Waters*

CONTINUED FROM PAGE V-4

1. POLLUTANT AND CAS NUMBER (*if available*)	2. MARK "X"			3. EFFLUENT							4. UNITS		5. INTAKE (*optional*)		
	a. TESTING REQUIRED	b. BELIEVED PRESENT	c. BELIEVED ABSENT	a. MAXIMUM DAILY VALUE		b. MAXIMUM 30 DAY VALUE (*if available*)		c. LONG TERM AVRG. VALUE (*if available*)		d. NO. OF ANALYSES	a. CONCEN-TRATION	b. MASS	a. LONG TERM AVERAGE VALUE		b. NO. OF ANALYSES
				(1) CONCENTRATION	(2) MASS	(1) CONCENTRATION	(2) MASS	(1) CONCENTRATION	(2) MASS				(1) CONCENTRATION	(2) MASS	
GC/MS FRACTION – VOLATILE COMPOUNDS (*continued*)															
22V. Methylene Chloride (75-09-2)	X		X	<0.32	<0.01	--	--	--	--	1	PPB	LB/DAY	--	--	--
23V. 1,1,2,2-Tetrachloroethane (79-34-5)	X		X	<0.22	<0.01	--	--	--	--	1	PPB	LB/DAY	--	--	--
24V. Tetrachloro-ethylene (127-18-4)	X		X	<0.26	<0.01	--	--	--	--	1	PPB	LB/DAY	--	--	--
25V. Toluene (108-88-3)	X		X	<0.12	<0.01	--	--	--	--	1	PPB	LB/DAY	--	--	--
26V. 1,2-Trans-Dichloroethylene (156-60-5)	X		X	<0.12	<0.01	--	--	--	--	1	PPB	LB/DAY	--	--	--
27V. 1,1,1-Trichloro-ethane (71-55-6)			X	No Sample	--	--	--	--	--	0	PPB	LB/DAY	--	--	--
28V. 1,1,2-Trichloro-ethane (79-00-5)	X		X	<0.3	<0.1	--	--	--	--	1	PPB	LB/DAY	--	--	--
29V Trichloro-ethylene (79-01-6)	X		X	<0.21	<0.01	--	--	--	--	1	PPB	LB/DAY	--	--	--
30V. Trichloro-fluoromethane (75-69-4)				*DELISTED 01-8-1981* ANALYSIS NOT REQUIRED FOR THIS PARAMETER											
31V. Vinyl Chloride (75-01-4)	X		X	<0.24	<0.01	--	--	--	--	1	PPB	LB/DAY	--	--	--
GC/MS FRACTION – ACID COMPOUNDS															
1A. 2-Chlorophenol (95-57-8)	X		X	<0.59	<0.02	--	--	--	--	1	PPB	LB/DAY	--	--	--
2A. 2,4-Dichloro-phenol (120-83-2)	X		X	<0.46	<0.02	--	--	--	--	1	PPB	LB/DAY	--	--	--
3A. 2,4-Dimethyl-phenol (105-67-9)	X		X	<2.9	<0.09	--	--	--	--	1	PPB	LB/DAY	--	--	--
4A. 4,6-Dinitro-O-Cresol (534-52-1)	X		X	<1.3	<0.04	--	--	--	--	1	PPB	LB/DAY	--	--	--
5A. 2,4-Dinitro-phenol (51-28-5)	X		X	<2.3	<0.07	--	--	--	--	1	PPB	LB/DAY	--	--	--
6A. 2-Nitrophenol (88-75-5)			X	No Sample	--	--	--	--	--	0	PPB	LB/DAY	--	--	--
7A. 4-Nitrophenol (100-02-7)			X	No Sample	--	--	--	--	--	0	PPB	LB/DAY	--	--	--
8A. P-Chloro-M-Cresol (59-50-7)			X	No Sample	--	--	--	--	--	0	PPB	LB/DAY	--	--	--
9A. Pentachloro-phenol (87-86-5)	X		X	<1.8	<0.06	--	--	--	--	1	PPB	LB/DAY	--	--	--
10A. Phenol (108-95-2)	X		X	<0.22	<0.01	--	--	--	--	1	PPB	LB/DAY	--	--	--
11A. 2,4,6-Trichloro-phenol (88-05-2)	X		X	<0.36	<0.02	--	--	--	--	1	PPB	LB/DAY	--	--	--

CONTINUE ON REVERSE

* Values are based on weighted average of the 2015 measured data for Pond E ash dewatering well points and Pond E contact waters.

00022215

CONTINUED FROM THE FRONT

1. POLLUTANT AND CAS NUMBER (if available)	2. MARK "X"			3. EFFLUENT							4. UNITS		5. INTAKE (optional)		
	a. TESTING REQUIRED	b. BELIEVED PRESENT	c. BELIEVED ABSENT	a. MAXIMUM DAILY VALUE		b. MAXIMUM 30 DAY VALUE (if available)		c. LONG TERM AVRG. VALUE (if available)		d. NO. OF ANALYSES	a. CONCEN-TRATION	b. MASS	a. LONG TERM AVERAGE VALUE		b. NO. OF ANALYSES
				(1) CONCENTRATION	(2) MASS	(1) CONCENTRATION	(2) MASS	(1) CONCENTRATION	(2) MASS				(1) CONCENTRATION	(2) MASS	
GC/MS FRACTION – BASE/NEUTRAL COMPOUNDS															
1B. Acenaphthene (83-32-9)	X		X	<0.33	<0.01	--	--	--	--	1	PPB	LB/DAY	--	--	--
2B. Acenaphtylene (208-96-8)			X	No Sample	--	--	--	--	--	0	PPB	LB/DAY	--	--	--
3B. Anthracene (120-12-7)	X		X	<0.34	<0.01	--	--	--	--	1	PPB	LB/DAY	--	--	--
4B. Benzidine (92-87-5)	X		X	<22.4	<0.66	--	--	--	--	1	PPB	LB/DAY	--	--	--
5B. Benzo (*a*) Anthracene (56-55-3)	X		X	<0.3	<0.1	--	--	--	--	1	PPB	LB/DAY	--	--	--
6B. Benzo (*a*) Pyrene (50-32-8)	X		X	<0.36	<0.02	--	--	--	--	1	PPB	LB/DAY	--	--	--
7B. 3,4-Benzo-fluoranthene (205-99-2)	X		X	<0.41	<0.02	--	--	--	--	1	PPB	LB/DAY	--	--	--
8B. Benzo (*ghi*) Perylene (191-24-2)			X	No Sample	--	--	--	--	--	0	PPB	LB/DAY	--	--	--
9B. Benzo (*k*) Fluoranthene (207-08-9)	X		X	<0.37	<0.02	--	--	--	--	1	PPB	LB/DAY	--	--	--
10B. Bis (*2-Chloro-ethoxy*) Methane (111-91-1)			X	No Sample	--	--	--	--	--	0	PPB	LB/DAY	--	--	--
11B. Bis (*2-Chloro-ethyl*) Ether (111-44-4)	X		X	<0.35	<0.02	--	--	--	--	1	PPB	LB/DAY	--	--	--
12B. Bis (*2-Chloroisopropyl*) Ether (102-80-1)	X		X	<0.5	<0.1	--	--	--	--	1	PPB	LB/DAY	--	--	--
13B. Bis (*2-Ethyl-hexyl*) Phthalate (117-81-7)	X		X	<0.35	<0.02	--	--	--	--	1	PPB	LB/DAY	--	--	--
14B. 4-Bromophenyl Phenyl Ether (101-55-3)			X	No Sample	--	--	--	--	--	0	PPB	LB/DAY	--	--	--
15B. Butyl Benzyl Phthalate (85-68-7)	X		X	<0.33	<0.01	--	--	--	--	1	PPB	LB/DAY	--	--	--
16B. 2-Chloro-naphthalene (91-58-7)	X		X	<0.34	<0.01	--	--	--	--	1	PPB	LB/DAY	--	--	--
17B. 4-Chloro-phenyl Phenyl Ether (7005-72-3)			X	No Sample	--	--	--	--	--	0	PPB	LB/DAY	--	--	--
18B. Chrysene (218-01-9)	X		X	<0.35	<0.02	--	--	--	--	1	PPB	LB/DAY	--	--	--
19B. Dibenzo (*a,h*) Anthracene (53-70-3)	X		X	<0.29	<0.01	--	--	--	--	1	PPB	LB/DAY	--	--	--
20B. 1,2-Dichloro-benzene (95-50-1)	X		X	<0.2	<0.1	--	--	--	--	1	PPB	LB/DAY	--	--	--
21B. 1,3-Di-chloro-benzene (541-73-1)	X		X	<0.14	<0.01	--	--	--	--	1	PPB	LB/DAY	--	--	--

 CONTINUE ON PAGE V-7

* Values are based on weighted average of the 2015 measured data for Pond E ash dewatering well points and Pond E contact waters.

00022216

Interim Configuration: Ash Dewatering and Contact Waters*

CONTINUED FROM PAGE V-6

1. POLLUTANT AND CAS NUMBER (if available)	2. MARK "X"			3. EFFLUENT							4. UNITS		5. INTAKE (optional)		
	a. TESTING REQUIRED	b. BELIEVED PRESENT	c. BELIEVED ABSENT	a. MAXIMUM DAILY VALUE		b. MAXIMUM 30 DAY VALUE (if available)		c. LONG TERM AVRG. VALUE (if available)		d. NO. OF ANALYSES	a. CONCEN-TRATION	b. MASS	a. LONG TERM AVERAGE VALUE		b. NO. OF ANALYSES
				(1) CONCENTRATION	(2) MASS	(1) CONCENTRATION	(2) MASS	(1) CONCENTRATION	(2) MASS				(1) CONCENTRATION	(2) MASS	
GC/MS FRACTION – BASE/NEUTRAL COMPOUNDS (continued)															
22B. 1,4-Dichloro-benzene (106-46-7)	X		X	<0.15	<0.01	--	--	--	--	1	PPB	LB/DAY	--	--	--
23B. 3,3-Dichloro-benzidine (91-94-1)	X		X	<2.8	<0.09	--	--	--	--	1	PPB	LB/DAY	--	--	--
24B. Diethyl Phthalate (84-66-2)	X		X	<0.3	<0.1	--	--	--	--	1	PPB	LB/DAY	--	--	--
25B. Dimethyl Phthalate (131-11-3)	X		X	<0.37	<0.02	--	--	--	--	1	PPB	LB/DAY	--	--	--
26B. Di-N-Butyl Phthalate (84-74-2)	X		X	<0.31	<0.01	--	--	--	--	1	PPB	LB/DAY	--	--	--
27B. 2,4-Dinitro-toluene (121-14-2)	X		X	<0.37	<0.02	--	--	--	--	1	PPB	LB/DAY	--	--	--
28B. 2,6-Dinitro-toluene (606-20-2)			X	No Sample	--	--	--	--	--	0	PPB	LB/DAY	--	--	--
29B. Di-N-Octyl Phthalate (117-84-0)			X	No Sample	--	--	--	--	--	0	PPB	LB/DAY	--	--	--
30B. 1,2-Diphenyl-hydrazine (as *Azo-benzene*) (122-66-7)	X		X	<0.32	<0.01	--	--	--	--	1	PPB	LB/DAY	--	--	--
31B. Fluoranthene (206-44-0)	X		X	<0.25	<0.01	--	--	--	--	1	PPB	LB/DAY	--	--	--
32B. Fluorene (86-73-7)	X		X	<0.36	<0.02	--	--	--	--	1	PPB	LB/DAY	--	--	--
33B. Hexachloro-benzene (118-74-1)	X		X	<0.3	<0.1	--	--	--	--	1	PPB	LB/DAY	--	--	--
34B. Hexachloro-butadiene (87-68-3)	X		X	<0.29	<0.01	--	--	--	--	1	PPB	LB/DAY	--	--	--
35B. Hexachloro-cyclopentadiene (77-47-4)	X		X	<1	<0.1	--	--	--	--	1	PPB	LB/DAY	--	--	--
36B Hexachloro-ethane (67-72-1)	X		X	<0.32	<0.01	--	--	--	--	1	PPB	LB/DAY	--	--	--
37B. Indeno (*1,2,3-cd*) Pyrene (193-39-5)	X		X	<0.29	<0.01	--	--	--	--	1	PPB	LB/DAY	--	--	--
38B. Isophorone (78-59-1)	X		X	<0.38	<0.02	--	--	--	--	1	PPB	LB/DAY	--	--	--
39B. Naphthalene (91-20-3)			X	No Sample	--	--	--	--	--	0	PPB	LB/DAY	--	--	--
40B. Nitrobenzene (98-95-3)	X		X	<0.62	<0.02	--	--	--	--	1	PPB	LB/DAY	--	--	--
41B. N-Nitro-sodimethylamine (62-75-9)	X		X	<0.45	<0.02	--	--	--	--	1	PPB	LB/DAY	--	--	--
42B. N-Nitrosodi-N-Propylamine (621-64-7)	X		X	<0.53	<0.02	--	--	--	--	1	PPB	LB/DAY	--	--	--

CONTINUE ON REVERSE

* Values are based on weighted average of the 2015 measured data for Pond E ash dewatering well points and Pond E contact waters.

00022217

CONTINUED FROM THE FRONT

1. POLLUTANT AND CAS NUMBER (if available)	2. MARK "X"			3. EFFLUENT							4. UNITS		5. INTAKE (optional)		
	a. TESTING REQUIRED	b. BELIEVED PRESENT	c. BELIEVED ABSENT	a. MAXIMUM DAILY VALUE		b. MAXIMUM 30 DAY VALUE (if available)		c. LONG TERM AVRG. VALUE (if available)		d. NO. OF ANALYSES	a. CONCEN-TRATION	b. MASS	a. LONG TERM AVERAGE VALUE		b. NO. OF ANALYSES
				(1) CONCENTRATION	(2) MASS	(1) CONCENTRATION	(2) MASS	(1) CONCENTRATION	(2) MASS				(1) CONCENTRATION	(2) MASS	
GC/MS FRACTION – BASE/NEUTRAL COMPOUNDS (continued)															
43B. N-Nitro-sodiphenylamine (86-30-6)	X		X	<1	<0.1	--	--	--	--	1	PPB	LB/DAY	--	--	--
44B. Phenanthrene (85-01-8)			X	No Sample	--	--	--	--	--	0	PPB	LB/DAY	--	--	--
45B. Pyrene (129-00-0)	X		X	<0.35	<0.02	--	--	--	--	1	PPB	LB/DAY	--	--	--
46B. 1,2,4-Tri-chlorobenzene (120-82-1)	X		X	<0.26	<0.01	--	--	--	--	1	PPB	LB/DAY	--	--	--
GC/MS FRACTION – PESTICIDES															
1P. Aldrin (309-00-2)	X		X	<0.0007	<0.01	--	--	--	--	1	PPB	LB/DAY	--	--	--
2P. α-BHC (319-84-6)	X		X	<0.00013	<0.01	--	--	--	--	1	PPB	LB/DAY	--	--	--
3P. β-BHC (319-85-7)	X		X	<0.00016	<0.01	--	--	--	--	1	PPB	LB/DAY	--	--	--
4P. γ-BHC (58-89-9)	X		X	<0.00015	<0.01	--	--	--	--	1	PPB	LB/DAY	--	--	--
5P. δ-BHC (319-86-8)	X		X	<0.00025	<0.01	--	--	--	--	1	PPB	LB/DAY	--	--	--
6P. Chlordane (57-74-9)	X		X	<0.013	<0.01	--	--	--	--	1	PPB	LB/DAY	--	--	--
7P. 4,4'-DDT (50-29-3)	X		X	<0.00023	<0.01	--	--	--	--	1	PPB	LB/DAY	--	--	--
8P. 4,4'-DDE (72-55-9)	X		X	<0.00016	<0.01	--	--	--	--	1	PPB	LB/DAY	--	--	--
9P. 4,4'-DDD (72-54-8)	X		X	<0.00016	<0.01	--	--	--	--	1	PPB	LB/DAY	--	--	--
10P. Dieldrin (60-57-1)	X		X	<0.00013	<0.01	--	--	--	--	1	PPB	LB/DAY	--	--	--
11P. α-Enosulfan (115-29-7)	X		X	<0.00028	<0.01	--	--	--	--	1	PPB	LB/DAY	--	--	--
12P. β-Endosulfan (115-29-7)	X		X	<0.00014	<0.01	--	--	--	--	1	PPB	LB/DAY	--	--	--
13P. Endosulfan Sulfate (1031-07-8)	X		X	<0.0002	<0.01	--	--	--	--	1	PPB	LB/DAY	--	--	--
14P. Endrin (72-20-8)	X		X	<0.00015	<0.01	--	--	--	--	1	PPB	LB/DAY	--	--	--
15P. Endrin Aldehyde (7421-93-4)	X		X	<0.00031	<0.01	--	--	--	--	1	PPB	LB/DAY	--	--	--
16P. Heptachlor (76-44-8)	X		X	<0.0003	<0.01	--	--	--	--	1	PPB	LB/DAY	--	--	--

 CONTINUE ON PAGE V-9

* Values are based on weighted average of the 2015 measured data for Pond E ash dewatering well points and Pond E contact waters.

00022218

EPA I.D. NUMBER (*copy from Item 1 of Form 1*)	OUTFALL NUMBER
110000340774	005

Interim Configuration: Ash Dewatering and Contact Waters*

CONTINUED FROM PAGE V-8

1. POLLUTANT AND CAS NUMBER (*if available*)	2. MARK "X"			3. EFFLUENT							4. UNITS		5. INTAKE (*optional*)		
	a. TESTING REQUIRED	b. BELIEVED PRESENT	c. BELIEVED ABSENT	a. MAXIMUM DAILY VALUE		b. MAXIMUM 30 DAY VALUE (*if available*)		c. LONG TERM AVRG. VALUE (*if available*)		d. NO. OF ANALYSES	a. CONCEN-TRATION	b. MASS	a. LONG TERM AVERAGE VALUE		b. NO. OF ANALYSES
				(1) CONCENTRATION	(2) MASS	(1) CONCENTRATION	(2) MASS	(1) CONCENTRATION	(2) MASS				(1) CONCENTRATION	(2) MASS	
GC/MS FRACTION – PESTICIDES (*continued*)															
17P. Heptachlor Epoxide (1024-57-3)	X		X	<0.00016	<0.01	--	--	--	--	1	PPB	LB/DAY	--	--	--
18P. PCB-1242 (53469-21-9)			X	No Sample	--	--	--	--	--	0	PPB	LB/DAY	--	--	--
19P. PCB-1254 (11097-69-1)			X	No Sample	--	--	--	--	--	0	PPB	LB/DAY	--	--	--
20P. PCB-1221 (11104-28-2)			X	No Sample	--	--	--	--	--	0	PPB	LB/DAY	--	--	--
21P. PCB-1232 (11141-16-5)			X	No Sample	--	--	--	--	--	0	PPB	LB/DAY	--	--	--
22P. PCB-1248 (12672-29-6)			X	No Sample	--	--	--	--	--	0	PPB	LB/DAY	--	--	--
23P. PCB-1260 (11096-82-5)			X	No Sample	--	--	--	--	--	0	PPB	LB/DAY	--	--	--
24P. PCB-1016 (12674-11-2)			X	No Sample	--	--	--	--	--	0	PPB	LB/DAY	--	--	--
25P. Toxaphene (8001-35-2)	X		X	<0.0099	<0.01	--	--	--	--	1	PPB	LB/DAY	--	--	--

* Values are based on weighted average of the 2015 measured data for Pond E ash dewatering well points and Pond E contact waters.

00022219

PLEASE PRINT OR TYPE IN THE UNSHADED AREAS ONLY. You may report some or all of this information on separate sheets (*use the same format*) instead of completing these pages.
SEE INSTRUCTIONS.

EPA I.D. NUMBER (*copy from Item 1 of Form 1*)
110000340774

Final Configuration*

V. INTAKE AND EFFLUENT CHARACTERISTICS (*continued from page 3 of Form 2-C*)

OUTFALL NO.
005

PART A –You must provide the results of at least one analysis for every pollutant in this table. Complete one table for each outfall. See instructions for additional details.

1. POLLUTANT	2. EFFLUENT a. MAXIMUM DAILY VALUE (1) CONCENTRATION	(2) MASS	b. MAXIMUM 30 DAY VALUE (*if available*) (1) CONCENTRATION	(2) MASS	c. LONG TERM AVRG. VALUE (*if available*) (1) CONCENTRATION	(2) MASS	d. NO. OF ANALYSES	3. UNITS (*specify if blank*) a. CONCEN-TRATION	b. MASS	4. INTAKE (*optional*) a. LONG TERM AVERAGE VALUE (1) CONCENTRATION	(2) MASS	b. NO. OF ANALYSES
a. Biochemical Oxygen Demand (*BOD*)	<0.8	<8	--	--	--	--	1	PPM	LB/DAY	--	--	--
b. Chemical Oxygen Demand (*COD*)	No Sample	--	--	--	--	--	0	PPM	LB/DAY	--	--	--
c. Total Organic Carbon (*TOC*)	No Sample	--	--	--	--	--	0	PPM	LB/DAY	--	--	--
d. Total Suspended Solids (*TSS*)	<5	<50	--	--	--	--	1	PPM	LB/DAY	--	--	--
e. Ammonia (*as N*)	<0.03	<0.3	--	--	--	--	1	PPM	LB/DAY	--	--	--
f. Flow **	VALUE 1.34		VALUE 1.34		VALUE 1.13		4	MGD	--	VALUE --		--
g. Temperature (*winter*)	VALUE No Sample		VALUE --		VALUE --		0	°C		VALUE --		--
h. Temperature (*summer*)	VALUE 19.35		VALUE --		VALUE --		1	°C		VALUE --		--
i. pH	MINIMUM No Sample	MAXIMUM 10.20	MINIMUM --	MAXIMUM --			1	STANDARD UNITS				

PART B – Mark "X" in column 2-a for each pollutant you know or have reason to believe is present. Mark "X" in column 2-b for each pollutant you believe to be absent. If you mark column 2a for any pollutant which is limited either directly, or indirectly but expressly, in an effluent limitations guideline, you must provide the results of at least one analysis for that pollutant. For other pollutants for which you mark column 2a, you must provide quantitative data or an explanation of their presence in your discharge. Complete one table for each outfall. See the instructions for additional details and requirements.

1. POLLUTANT AND CAS NO. (*if available*)	2. MARK "X" a. BELIEVED PRESENT	b. BELIEVED ABSENT	3. EFFLUENT a. MAXIMUM DAILY VALUE (1) CONCENTRATION	(2) MASS	b. MAXIMUM 30 DAY VALUE (*if available*) (1) CONCENTRATION	(2) MASS	c. LONG TERM AVRG. VALUE (*if available*) (1) CONCENTRATION	(2) MASS	d. NO. OF ANALYSES	4. UNITS a. CONCEN-TRATION	b. MASS	5. INTAKE (*optional*) a. LONG TERM AVERAGE VALUE (1) CONCENTRATION	(2) MASS	b. NO. OF ANALYSES
a. Bromide (24959-67-9)		X	No Sample	--	--	--	--	--	0	PPM	LB/DA	--	--	--
b. Chlorine, Total Residual	X		0.23	2.3	--	--	--	--	1	PPM	LB/DA	--	--	--
c. Color		X	No Sample	--	--	--	--	--	0	PCU	--	--	--	--
d. Fecal Coliform		X	No Sample	--	--	--	--	--	0	COL/0.1L	--	--	--	--
e. Fluoride (16984-48-8)		X	<0.12	<1.2	--	--	--	--	1	PPM	LB/DA	--	--	--
f. Nitrate-Nitrite (*as N*)		X	<0.21	<2.1	--	--	--	--	1	PPM	LB/DA	--	--	--

* Values are based on 2015 measured data for Outfall 501 (or as otherwise indicated).
** Values are based on Internal Outfall 501 data in 2013 VPDES Permit Reissuance Application and initial flow of Closed Ash Pond D underdrain which is presumed to be approximately 0.15-MGD and is expected to reduce to 0-MGD over time.

00022220

Final Configuration*

ITEM V-B CONTINUED FROM FRONT

1. POLLUTANT AND CAS NO. (if available)	2. MARK "X"		3. EFFLUENT							4. UNITS		5. INTAKE (optional)		
	a. BELIEVED PRESENT	b. BELIEVED ABSENT	a. MAXIMUM DAILY VALUE		b. MAXIMUM 30 DAY VALUE (if available)		c. LONG TERM AVRG. VALUE (if available)		d. NO. OF ANALYSES	a. CONCEN-TRATION	b. MASS	a. LONG TERM AVERAGE VALUE		b. NO. OF ANALYSES
			(1) CONCENTRATION	(2) MASS	(1) CONCENTRATION	(2) MASS	(1) CONCENTRATION	(2) MASS				(1) CONCENTRATION	(2) MASS	
g. Nitrogen, Total Organic (as N)		X	No Sample	--	--	--	--	--	0	PPM	LB/DA	--	--	--
h. Oil and Grease	X		<0.5	<5	--	--	--	--	1	PPM	LB/DA	--	--	--
i. Phosphorus (as P), Total (7723-14-0)	X		0.16	1.6	--	--	--	--	1	PPM	LB/DA	--	--	--
j. Radioactivity														
(1) Alpha, Total		X	No Sample	--	--	--	--	--	0	pCi/L	--	--	--	--
(2) Beta, Total		X	No Sample	--	--	--	--	--	0	pCi/L	--	--	--	--
(3) Radium, Total		X	No Sample	--	--	--	--	--	0	pCi/L	--	--	--	--
(4) Radium 226, Total		X	No Sample	--	--	--	--	--	0	pCi/L	--	--	--	--
k. Sulfate (as SO_4) (14808-79-8)	X		129	1290	--	--	--	--	1	PPM	LB/DA	--	--	--
l. Sulfide (as S)		X	<0.35	<3.5	--	--	--	--	1	PPM	LB/DA	--	--	--
m. Sulfite (as SO_3) (14265-45-3)		X	No Sample	--	--	--	--	--	0	PPM	LB/DA	--	--	--
n. Surfactants		X	No Sample	--	--	--	--	--	0	PPM	LB/DA	--	--	--
o. Aluminum, Total (7429-90-5)	X		0.10	1.0	--	--	--	--	1	PPM	LB/DA	--	--	--
p. Barium, Total (7440-39-3)	X		0.022	0.219	--	--	--	--	1	PPM	LB/DA	--	--	--
q. Boron, Total (7440-42-8)		X	<0.016	<0.159	--	--	--	--	1	PPM	LB/DA	--	--	--
r. Cobalt, Total (7440-48-4)		X	<0.00083	<0.009	--	--	--	--	1	PPM	LB/DA	--	--	--
s. Iron, Total (7439-89-6)	X		0.065	0.646	--	--	--	--	1	PPM	LB/DA	--	--	--
t. Magnesium, Total (7439-95-4)	X		7.3	73	--	--	--	--	1	PPM	LB/DA	--	--	--
u. Molybdenum, Total (7439-98-7)	X		0.0018	0.018	--	--	--	--	1	PPM	LB/DA	--	--	--
v. Manganese, Total (7439-96-5)	X		0.012	0.120	--	--	--	--	1	PPM	LB/DA	--	--	--
w. Tin, Total (7440-31-5)		X	No Sample	--	--	--	--	--	0	PPM	LB/DA	--	--	--
x. Titanium, Total (7440-32-6)		X	No Sample	--	--	--	--	--	0	PPM	LB/DA	--	--	--

 CONTINUE ON PAGE V-3

* Values are based on 2015 measured data for Outfall 501.

00022221

EPA I.D. NUMBER (*copy from Item 1 of Form 1*)	OUTFALL NUMBER
110000340774	005

Final Configuration*

CONTINUED FROM PAGE 3 OF FORM 2-C

PART C - If you are a primary industry and this outfall contains process wastewater, refer to Table 2c-2 in the instructions to determine which of the GC/MS fractions you must test for. Mark "X" in column 2-a for all such GC/MS fractions that apply to your industry and for ALL toxic metals, cyanides, and total phenols. If you are not required to mark column 2-a (*secondary industries, nonprocess wastewater outfalls, and nonrequired GC/MS fractions*), mark "X" in column 2-b for each pollutant you know or have reason to believe is present. Mark "X" in column 2-c for each pollutant you believe is absent. If you mark column 2a for any pollutant, you must provide the results of at least one analysis for that pollutant. If you mark column 2b for any pollutant, you must provide the results of at least one analysis for that pollutant if you know or have reason to believe it will be discharged in concentrations of 10 ppb or greater. If you mark column 2b for acrolein, acrylonitrile, 2,4 dinitrophenol, or 2-methyl-4, 6 dinitrophenol, you must provide the results of at least one analysis for each of these pollutants which you know or have reason to believe that you discharge in concentrations of 100 ppb or greater. Otherwise, for pollutants for which you mark column 2b, you must either submit at least one analysis or briefly describe the reasons the pollutant is expected to be discharged. Note that there are 7 pages to this part; please review each carefully. Complete one table (*all 7 pages*) for each outfall. See instructions for additional details and requirements.

1. POLLUTANT AND CAS NUMBER (*if available*)	2. MARK "X"			3. EFFLUENT							4. UNITS		5. INTAKE (*optional*)		
	a. TESTING REQUIRED	b BELIEVED PRESENT	c. BELIEVED ABSENT	a. MAXIMUM DAILY VALUE		b. MAXIMUM 30 DAY VALUE (*if available*)		c. LONG TERM AVRG. VALUE (*if available*)		d. NO. OF ANALYSES	a. CONCEN-TRATION	b. MASS	a. LONG TERM AVERAGE VALUE		b. NO. OF ANALYSES
				(1) CONCENTRATION	(2) MASS	(1) CONCENTRATION	(2) MASS	(1) CONCENTRATION	(2) MASS				(1) CONCENTRATION	(2) MASS	
METALS, CYANIDE, AND TOTAL PHENOLS															
1M. Antimony, Total (7440-36-0)			X	<0.00033	<0.004	--	--	--	--	1	PPM	LB/DAY	--	--	--
2M. Arsenic, Total (7440-38-2)			X	<0.0005	<0.005	--	--	--	--	1	PPM	LB/DAY	--	--	--
3M. Beryllium, Total (7440-41-7)			X	<0.0001	<0.001	--	--	--	--	1	PPM	LB/DAY	--	--	--
4M. Cadmium, Total (7440-43-9)			X	<0.00016	<0.002	--	--	--	--	1	PPM	LB/DAY	--	--	--
5M. Chromium, Total (7440-47-3)			X	<0.00033	<0.004	--	--	--	--	1	PPM	LB/DAY	--	--	--
6M. Copper, Total (7440-50-8)	X	X		<0.0038	<0.038	--	--	--	--	1	PPM	LB/DAY	--	--	--
7M. Lead, Total (7439-92-1)			X	<0.00033	<0.004	--	--	--	--	1	PPM	LB/DAY	--	--	--
8M. Mercury, Total (7439-97-6)			X	<0.00016	<0.002	--	--	--	--	1	PPM	LB/DAY	--	--	--
9M. Nickel, Total (7440-02-0)		X		0.023	0.229	--	--	--	--	1	PPM	LB/DAY	--	--	--
10M. Selenium, Total (7782-49-2)			X	<0.00066	<0.007	--	--	--	--	1	PPM	LB/DAY	--	--	--
11M. Silver, Total (7440-22-4)			X	<0.00033	<0.004	--	--	--	--	1	PPM	LB/DAY	--	--	--
12M. Thallium, Total (7440-28-0)			X	<0.00016	<0.002	--	--	--	--	1	PPM	LB/DAY	--	--	--
13M. Zinc, Total (7440-66-6)		X		0.0042	0.042	--	--	--	--	1	PPM	LB/DAY	--	--	--
14M. Cyanide, Total (57-12-5)			X	<0.00058	<0.006	--	--	--	--	1	PPM	LB/DAY	--	--	--
15M. Phenols, Total			X	No Sample	--	--	--	--	--	0	PPM	LB/DAY	--	--	--
DIOXIN															
2,3,7,8-Tetra-chlorodibenzo-P-Dioxin (1764-01-6)			X	DESCRIBE RESULTS No Sample											

* Values are based on 2015 measured data for Outfall 501.

00022222

Final Configuration*

CONTINUED FROM THE FRONT

1. POLLUTANT AND CAS NUMBER (if available)	2. MARK "X"			3. EFFLUENT							4. UNITS		5. INTAKE (optional)		
	a. TESTING REQUIRED	b. BELIEVED PRESENT	c. BELIEVED ABSENT	a. MAXIMUM DAILY VALUE		b. MAXIMUM 30 DAY VALUE (if available)		c. LONG TERM AVRG. VALUE (if available)		d. NO. OF ANALYSES	a. CONCEN-TRATION	b. MASS	a. LONG TERM AVERAGE VALUE		b. NO. OF ANALYSES
				(1) CONCENTRATION	(2) MASS	(1) CONCENTRATION	(2) MASS	(1) CONCENTRATION	(2) MASS				(1) CONCENTRATION	(2) MASS	
GC/MS FRACTION – VOLATILE COMPOUNDS															
1V. Acrolein (107-02-8)			X	<2.4	<0.03	--	--	--	--	1	PPB	LB/DAY	--	--	--
2V. Acrylonitrile (107-13-1)			X	<0.89	<0.01	--	--	--	--	1	PPB	LB/DAY	--	--	--
3V. Benzene (71-43-2)			X	<0.16	<0.01	--	--	--	--	1	PPB	LB/DAY	--	--	--
4V. Bis (*Chloromethyl*) Ether (542-88-1)				*DELISTED 02-4-1981* ANALYSIS NOT REQUIRED FOR THIS PARAMETER											
5V. Bromoform (75-25-2)			X	<0.21	<0.01	--	--	--	--	1	PPB	LB/DAY	--	--	--
6V. Carbon Tetrachloride (56-23-5)			X	<0.24	<0.01	--	--	--	--	1	PPB	LB/DAY	--	--	--
7V. Chlorobenzene (108-90-7)			X	<0.11	<0.01	--	--	--	--	1	PPB	LB/DAY	--	--	--
8V. Chlorodibromomethane (124-48-1)			X	<0.22	<0.01	--	--	--	--	1	PPB	LB/DAY	--	--	--
9V. Chloroethane (75-00-3)			X	No Sample	--	--	--	--	--	0	PPB	LB/DAY	--	--	--
10V. 2-Chloroethylvinyl Ether (110-75-8)			X	No Sample	--	--	--	--	--	0	PPB	LB/DAY	--	--	--
11V. Chloroform (67-66-3)			X	<0.15	<0.01	--	--	--	--	1	PPB	LB/DAY	--	--	--
12V. Dichlorobromomethane (75-27-4)			X	<0.13	<0.01	--	--	--	--	1	PPB	LB/DAY	--	--	--
13V. Dichlorodifluoromethane (75-71-8)				*DELISTED 01-8-1981* ANALYSIS NOT REQUIRED FOR THIS PARAMETER											
14V. 1,1-Dichloroethane (75-34-3)			X	No Sample	--	--	--	--	--	0	PPB	LB/DAY	--	--	--
15V. 1,2-Dichloroethane (107-06-2)			X	<0.22	<0.01	--	--	--	--	1	PPB	LB/DAY	--	--	--
16V. 1,1-Dichloroethylene (75-35-4)			X	<0.17	<0.01	--	--	--	--	1	PPB	LB/DAY	--	--	--
17V. 1,2-Dichloropropane (78-87-5)			X	<0.24	<0.01	--	--	--	--	1	PPB	LB/DAY	--	--	--
18V. 1,3-Dichloropropylene (542-75-6)			X	<0.19	<0.01	--	--	--	--	1	PPB	LB/DAY	--	--	--
19V. Ethylbenzene (100-41-4)			X	<0.16	<0.01	--	--	--	--	1	PPB	LB/DAY	--	--	--
20V. Methyl Bromide (74-83-9)			X	<0.27	<0.01	--	--	--	--	1	PPB	LB/DAY	--	--	--
21V. Methyl Chloride (74-87-3)			X	No Sample	--	--	--	--	--	0	PPB	LB/DAY	--	--	--

 CONTINUE ON PAGE V-5

* Values are based on 2015 measured data for Outfall 501.

00022223

Final Configuration*

CONTINUED FROM PAGE V-4

1. POLLUTANT AND CAS NUMBER (if available)	2. MARK "X"			3. EFFLUENT							4. UNITS		5. INTAKE (optional)		
	a. TESTING REQUIRED	b. BELIEVED PRESENT	c. BELIEVED ABSENT	a. MAXIMUM DAILY VALUE		b. MAXIMUM 30 DAY VALUE (if available)		c. LONG TERM AVRG. VALUE (if available)		d. NO. OF ANALYSES	a. CONCEN-TRATION	b. MASS	a. LONG TERM AVERAGE VALUE		b. NO. OF ANALYSES
				(1) CONCENTRATION	(2) MASS	(1) CONCENTRATION	(2) MASS	(1) CONCENTRATION	(2) MASS				(1) CONCENTRATION	(2) MASS	
GC/MS FRACTION – VOLATILE COMPOUNDS (continued)															
22V. Methylene Chloride (75-09-2)			X	<0.32	<0.01	--	--	--	--	1	PPB	LB/DAY	--	--	--
23V. 1,1,2,2-Tetrachloroethane (79-34-5)			X	<0.22	<0.01	--	--	--	--	1	PPB	LB/DAY	--	--	--
24V. Tetrachloro-ethylene (127-18-4)			X	<0.26	<0.01	--	--	--	--	1	PPB	LB/DAY	--	--	--
25V. Toluene (108-88-3)			X	<0.12	<0.01	--	--	--	--	1	PPB	LB/DAY	--	--	--
26V. 1,2-Trans-Dichloroethylene (156-60-5)			X	<0.12	<0.01	--	--	--	--	1	PPB	LB/DAY	--	--	--
27V. 1,1,1-Trichloro-ethane (71-55-6)			X	No Sample	--	--	--	--	--	0	PPB	LB/DAY	--	--	--
28V. 1,1,2-Trichloro-ethane (79-00-5)			X	<0.3	<0.1	--	--	--	--	1	PPB	LB/DAY	--	--	--
29V Trichloro-ethylene (79-01-6)			X	<0.21	<0.01	--	--	--	--	1	PPB	LB/DAY	--	--	--
30V. Trichloro-fluoromethane (75-69-4)				*DELISTED 01-8-1981* ANALYSIS NOT REQUIRED FOR THIS PARAMETER											
31V. Vinyl Chloride (75-01-4)			X	<0.24	<0.01	--	--	--	--	1	PPB	LB/DAY	--	--	--
GC/MS FRACTION – ACID COMPOUNDS															
1A. 2-Chlorophenol (95-57-8)			X	<0.59	<0.01	--	--	--	--	1	PPB	LB/DAY	--	--	--
2A. 2,4-Dichloro-phenol (120-83-2)			X	<0.46	<0.01	--	--	--	--	1	PPB	LB/DAY	--	--	--
3A. 2,4-Dimethyl-phenol (105-67-9)			X	<2.9	<0.03	--	--	--	--	1	PPB	LB/DAY	--	--	--
4A. 4,6-Dinitro-O-Cresol (534-52-1)			X	<1.3	<0.02	--	--	--	--	1	PPB	LB/DAY	--	--	--
5A. 2,4-Dinitro-phenol (51-28-5)			X	<2.3	<0.03	--	--	--	--	1	PPB	LB/DAY	--	--	--
6A. 2-Nitrophenol (88-75-5)			X	No Sample	--	--	--	--	--	0	PPB	LB/DAY	--	--	--
7A. 4-Nitrophenol (100-02-7)			X	No Sample	--	--	--	--	--	0	PPB	LB/DAY	--	--	--
8A. P-Chloro-M-Cresol (59-50-7)			X	No Sample	--	--	--	--	--	0	PPB	LB/DAY	--	--	--
9A. Pentachloro-phenol (87-86-5)			X	<1.8	<0.02	--	--	--	--	1	PPB	LB/DAY	--	--	--
10A. Phenol (108-95-2)			X	<0.22	<0.01	--	--	--	--	1	PPB	LB/DAY	--	--	--
11A. 2,4,6-Trichloro-phenol (88-05-2)			X	<0.35	<0.01	--	--	--	--	1	PPB	LB/DAY	--	--	--

CONTINUE ON REVERSE

* Values are based on 2015 measured data for Outfall 501.

00022224

Final Configuration*

CONTINUED FROM THE FRONT

1. POLLUTANT AND CAS NUMBER (if available)	2. MARK "X"			3. EFFLUENT							4. UNITS		5. INTAKE (optional)		
	a. TESTING REQUIRED	b. BELIEVED PRESENT	c. BELIEVED ABSENT	a. MAXIMUM DAILY VALUE		b. MAXIMUM 30 DAY VALUE (if available)		c. LONG TERM AVRG. VALUE (if available)		d. NO. OF ANALYSES	a. CONCEN-TRATION	b. MASS	a. LONG TERM AVERAGE VALUE		b. NO. OF ANALYSES
				(1) CONCENTRATION	(2) MASS	(1) CONCENTRATION	(2) MASS	(1) CONCENTRATION	(2) MASS				(1) CONCENTRATION	(2) MASS	
GC/MS FRACTION – BASE/NEUTRAL COMPOUNDS															
1B. Acenaphthene (83-32-9)			X	<0.33	<0.01	--	--	--	--	1	PPB	LB/DAY	--	--	--
2B. Acenaphtylene (208-96-8)			X	No Sample	--	--	--	--	--	0	PPB	LB/DAY	--	--	--
3B. Anthracene (120-12-7)			X	<0.33	<0.01	--	--	--	--	1	PPB	LB/DAY	--	--	--
4B. Benzidine (92-87-5)			X	<22.3	<0.222	--	--	--	--	1	PPB	LB/DAY	--	--	--
5B. Benzo (*a*) Anthracene (56-55-3)			X	<0.3	<0.1	--	--	--	--	1	PPB	LB/DAY	--	--	--
6B. Benzo (*a*) Pyrene (50-32-8)			X	<0.35	<0.01	--	--	--	--	1	PPB	LB/DAY	--	--	--
7B. 3,4-Benzo-fluoranthene (205-99-2)			X	<0.41	<0.01	--	--	--	--	1	PPB	LB/DAY	--	--	--
8B. Benzo (*ghi*) Perylene (191-24-2)			X	No Sample	--	--	--	--	--	0	PPB	LB/DAY	--	--	--
9B. Benzo (*k*) Fluoranthene (207-08-9)			X	<0.37	<0.01	--	--	--	--	1	PPB	LB/DAY	--	--	--
10B. Bis (*2-Chloro-ethoxy*) Methane (111-91-1)			X	No Sample	--	--	--	--	--	0	PPB	LB/DAY	--	--	--
11B. Bis (*2-Chloro-ethyl*) Ether (111-44-4)			X	<0.34	<0.01	--	--	--	--	1	PPB	LB/DAY	--	--	--
12B. Bis (*2-Chloroisopropyl*) Ether (102-80-1)			X	<0.49	<0.01	--	--	--	--	1	PPB	LB/DAY	--	--	--
13B. Bis (*2-Ethyl-hexyl*) Phthalate (117-81-7)			X	<0.34	<0.01	--	--	--	--	1	PPB	LB/DAY	--	--	--
14B. 4-Bromophenyl Phenyl Ether (101-55-3)			X	No Sample	--	--	--	--	--	0	PPB	LB/DAY	--	--	--
15B. Butyl Benzyl Phthalate (85-68-7)			X	<0.33	<0.01	--	--	--	--	1	PPB	LB/DAY	--	--	--
16B. 2-Chloro-naphthalene (91-58-7)			X	<0.33	<0.01	--	--	--	--	1	PPB	LB/DAY	--	--	--
17B. 4-Chloro-phenyl Phenyl Ether (7005-72-3)			X	No Sample	--	--	--	--	--	0	PPB	LB/DAY	--	--	--
18B. Chrysene (218-01-9)			X	<0.34	<0.01	--	--	--	--	1	PPB	LB/DAY	--	--	--
19B. Dibenzo (*a,h*) Anthracene (53-70-3)			X	<0.29	<0.01	--	--	--	--	1	PPB	LB/DAY	--	--	--
20B. 1,2-Dichloro-benzene (95-50-1)			X	<0.2	<0.1	--	--	--	--	1	PPB	LB/DAY	--	--	--
21B. 1,3-Di-chloro-benzene (541-73-1)			X	<0.14	<0.01	--	--	--	--	1	PPB	LB/DAY	--	--	--

 CONTINUE ON PAGE V-7

* Values are based on 2015 measured data for Outfall 501.

00022225

Final Configuration*

CONTINUED FROM PAGE V-6

1. POLLUTANT AND CAS NUMBER (if available)	2. MARK "X"			3. EFFLUENT							4. UNITS		5. INTAKE (optional)		
	a. TESTING REQUIRED	b. BELIEVED PRESENT	c. BELIEVED ABSENT	a. MAXIMUM DAILY VALUE		b. MAXIMUM 30 DAY VALUE (if available)		c. LONG TERM AVRG. VALUE (if available)		d. NO. OF ANALYSES	a. CONCEN-TRATION	b. MASS	a. LONG TERM AVERAGE VALUE		b. NO. OF ANALYSES
				(1) CONCENTRATION	(2) MASS	(1) CONCENTRATION	(2) MASS	(1) CONCENTRATION	(2) MASS				(1) CONCENTRATION	(2) MASS	
GC/MS FRACTION – BASE/NEUTRAL COMPOUNDS (continued)															
22B. 1,4-Dichloro-benzene (106-46-7)			X	<0.15	<0.01	--	--	--	--	1	PPB	LB/DAY	--	--	--
23B. 3,3-Dichloro-benzidine (91-94-1)			X	<0.28	<0.01	--	--	--	--	1	PPB	LB/DAY	--	--	--
24B. Diethyl Phthalate (84-66-2)			X	<0.3	<0.1	--	--	--	--	1	PPB	LB/DAY	--	--	--
25B. Dimethyl Phthalate (131-11-3)			X	<0.37	<0.01	--	--	--	--	1	PPB	LB/DAY	--	--	--
26B. Di-N-Butyl Phthalate (84-74-2)			X	<0.31	<0.01	--	--	--	--	1	PPB	LB/DAY	--	--	--
27B. 2,4-Dinitro-toluene (121-14-2)			X	<0.37	<0.01	--	--	--	--	1	PPB	LB/DAY	--	--	--
28B. 2,6-Dinitro-toluene (606-20-2)			X	No Sample	--	--	--	--	--	0	PPB	LB/DAY	--	--	--
29B. Di-N-Octyl Phthalate (117-84-0)			X	No Sample	--	--	--	--	--	0	PPB	LB/DAY	--	--	--
30B. 1,2-Diphenyl-hydrazine (as Azo-benzene) (122-66-7)			X	<0.32	<0.01	--	--	--	--	1	PPB	LB/DAY	--	--	--
31B. Fluoranthene (206-44-0)			X	<0.25	<0.01	--	--	--	--	1	PPB	LB/DAY	--	--	--
32B. Fluorene (86-73-7)			X	<0.36	<0.01	--	--	--	--	1	PPB	LB/DAY	--	--	--
33B. Hexachloro-benzene (118-74-1)			X	<0.3	<0.1	--	--	--	--	1	PPB	LB/DAY	--	--	--
34B. Hexachloro-butadiene (87-68-3)			X	<0.29	<0.01	--	--	--	--	1	PPB	LB/DAY	--	--	--
35B. Hexachloro-cyclopentadiene (77-47-4)			X	<1	<0.1	--	--	--	--	1	PPB	LB/DAY	--	--	--
36B Hexachloro-ethane (67-72-1)			X	<0.32	<0.01	--	--	--	--	1	PPB	LB/DAY	--	--	--
37B. Indeno (1,2,3-cd) Pyrene (193-39-5)			X	<0.29	<0.01	--	--	--	--	1	PPB	LB/DAY	--	--	--
38B. Isophorone (78-59-1)			X	<0.38	<0.01	--	--	--	--	1	PPB	LB/DAY	--	--	--
39B. Naphthalene (91-20-3)			X	No Sample	--	--	--	--	--	0	PPB	LB/DAY	--	--	--
40B. Nitrobenzene (98-95-3)			X	<0.6	<0.1			--	--	1	PPB	LB/DAY	--	--	--
41B. N-Nitro-sodimethylamine (62-75-9)			X	<0.45	<0.01	--	--	--	--	1	PPB	LB/DAY	--	--	--
42B. N-Nitrosodi-N-Propylamine (621-64-7)			X	<0.53	<0.01	--	--	--	--	1	PPB	LB/DAY	--	--	--

CONTINUE ON REVERSE

* Values are based on 2015 measured data for Outfall 501.

00022226

Final Configuration*

CONTINUED FROM THE FRONT

1. POLLUTANT AND CAS NUMBER (*if available*)	2. MARK "X"			3. EFFLUENT							4. UNITS		5. INTAKE (*optional*)		
	a. TESTING REQUIRED	b. BELIEVED PRESENT	c. BELIEVED ABSENT	a. MAXIMUM DAILY VALUE		b. MAXIMUM 30 DAY VALUE (*if available*)		c. LONG TERM AVRG. VALUE (*if available*)		d. NO. OF ANALYSES	a. CONCEN-TRATION	b. MASS	a. LONG TERM AVERAGE VALUE		b. NO. OF ANALYSES
				(1) CONCENTRATION	(2) MASS	(1) CONCENTRATION	(2) MASS	(1) CONCENTRATION	(2) MASS				(1) CONCENTRATION	(2) MASS	
GC/MS FRACTION – BASE/NEUTRAL COMPOUNDS (*continued*)															
43B. N-Nitro-sodiphenylamine (86-30-6)			X	<1	<0.1	--	--	--	--	1	PPB	LB/DAY	--	--	--
44B. Phenanthrene (85-01-8)			X	No Sample	--	--	--	--	--	0	PPB	LB/DAY	--	--	--
45B. Pyrene (129-00-0)			X	<0.34	<0.01	--	--	--	--	1	PPB	LB/DAY	--	--	--
46B. 1,2,4-Tri-chlorobenzene (120-82-1)			X	<0.26	<0.01	--	--	--	--	1	PPB	LB/DAY	--	--	--
GC/MS FRACTION – PESTICIDES															
1P. Aldrin (309-00-2)			X	<0.0006	<0.001	--	--	--	--	1	PPB	LB/DAY	--	--	--
2P. α-BHC (319-84-6)			X	<0.00013	<0.001	--	--	--	--	1	PPB	LB/DAY	--	--	--
3P. β-BHC (319-85-7)			X	<0.00016	<0.001	--	--	--	--	1	PPB	LB/DAY	--	--	--
4P. γ-BHC (58-89-9)			X	<0.00015	<0.001	--	--	--	--	1	PPB	LB/DAY	--	--	--
5P. δ-BHC (319-86-8)			X	<0.00024	<0.001	--	--	--	--	1	PPB	LB/DAY	--	--	--
6P. Chlordane (57-74-9)			X	<0.013	<0.001	--	--	--	--	1	PPB	LB/DAY	--	--	--
7P. 4,4'-DDT (50-29-3)			X	<0.00023	<0.001	--	--	--	--	1	PPB	LB/DAY	--	--	--
8P. 4,4'-DDE (72-55-9)			X	<0.00016	<0.001	--	--	--	--	1	PPB	LB/DAY	--	--	--
9P. 4,4'-DDD (72-54-8)			X	<0.00016	<0.001	--	--	--	--	1	PPB	LB/DAY	--	--	--
10P. Dieldrin (60-57-1)			X	<0.00013	<0.001	--	--	--	--	1	PPB	LB/DAY	--	--	--
11P. α-Enosulfan (115-29-7)			X	<0.00028	<0.001	--	--	--	--	1	PPB	LB/DAY	--	--	--
12P. β-Endosulfan (115-29-7)			X	<0.00014	<0.001	--	--	--	--	1	PPB	LB/DAY	--	--	--
13P. Endosulfan Sulfate (1031-07-8)			X	<0.0002	<0.001	--	--	--	--	1	PPB	LB/DAY	--	--	--
14P. Endrin (72-20-8)			X	<0.00015	<0.001	--	--	--	--	1	PPB	LB/DAY	--	--	--
15P. Endrin Aldehyde (7421-93-4)			X	<0.00031	<0.001	--	--	--	--	1	PPB	LB/DAY	--	--	--
16P. Heptachlor (76-44-8)			X	<0.0003	<0.001	--	--	--	--	1	PPB	LB/DAY	--	--	--

 CONTINUE ON PAGE V-9

* Values are based on 2015 measured data for Outfall 501.

00022227

EPA I.D. NUMBER (*copy from Item 1 of Form 1*)	OUTFALL NUMBER
110000340774	005

Final Configuration*

CONTINUED FROM PAGE V-8

1. POLLUTANT AND CAS NUMBER (*if available*)	2. MARK "X"			3. EFFLUENT							4. UNITS		5. INTAKE (*optional*)		
	a. TESTING REQUIRED	b. BELIEVED PRESENT	c. BELIEVED ABSENT	a. MAXIMUM DAILY VALUE		b. MAXIMUM 30 DAY VALUE (*if available*)		c. LONG TERM AVRG. VALUE (*if available*)		d. NO. OF ANALYSES	a. CONCEN-TRATION	b. MASS	a. LONG TERM AVERAGE VALUE		b. NO. OF ANALYSES
				(1) CONCENTRATION	(2) MASS	(1) CONCENTRATION	(2) MASS	(1) CONCENTRATION	(2) MASS				(1) CONCENTRATION	(2) MASS	
GC/MS FRACTION – PESTICIDES (*continued*)															
17P. Heptachlor Epoxide (1024-57-3)			X	<0.00016	<0.001	--	--	--	--	1	PPB	LB/DAY	--	--	--
18P. PCB-1242 (53469-21-9)			X	No Sample	--	--	--	--	--	0	PPB	LB/DAY	--	--	--
19P. PCB-1254 (11097-69-1)			X	No Sample	--	--	--	--	--	0	PPB	LB/DAY	--	--	--
20P. PCB-1221 (11104-28-2)			X	No Sample	--	--	--	--	--	0	PPB	LB/DAY	--	--	--
21P. PCB-1232 (11141-16-5)			X	No Sample	--	--	--	--	--	0	PPB	LB/DAY	--	--	--
22P. PCB-1248 (12672-29-6)			X	No Sample	--	--	--	--	--	0	PPB	LB/DAY	--	--	--
23P. PCB-1260 (11096-82-5)			X	No Sample	--	--	--	--	--	0	PPB	LB/DAY	--	--	--
24P. PCB-1016 (12674-11-2)			X	No Sample	--	--	--	--	--	0	PPB	LB/DAY	--	--	--
25P. Toxaphene (8001-35-2)			X	<0.0098	<0.001	--	--	--	--	1	PPB	LB/DAY	--	--	--

* Values are based on 2015 measured data for Outfall 501.

00022228

PLEASE PRINT OR TYPE IN THE UNSHADED AREAS ONLY. You may report some or all of this information on separate sheets (*use the same format*) instead of completing these pages. SEE INSTRUCTIONS.

EPA I.D. NUMBER (*copy from Item 1 of Form 1*): 110000340774

Interim & Final Configuration*

V. INTAKE AND EFFLUENT CHARACTERISTICS *(continued from page 3 of Form 2-C)* [redacted] OUTFALL NO. 501

PART A –You must provide the results of at least one analysis for every pollutant in this table. Complete one table for each outfall. See instructions for additional details.

1. POLLUTANT	2. EFFLUENT a. MAXIMUM DAILY VALUE (1) CONCENTRATION	(2) MASS	b. MAXIMUM 30 DAY VALUE (*if available*) (1) CONCENTRATION	(2) MASS	c. LONG TERM AVRG. VALUE (*if available*) (1) CONCENTRATION	(2) MASS	d. NO. OF ANALYSES	3. UNITS (*specify if blank*) a. CONCEN-TRATION	b. MASS	4. INTAKE (*optional*) a. LONG TERM AVERAGE VALUE (1) CONCENTRATION	(2) MASS	b. NO. OF ANALYSES
a. Biochemical Oxygen Demand (*BOD*)	<0.8	<8	--	--	--	--	1	PPM	LB/DAY	--	--	--
b. Chemical Oxygen Demand (*COD*)	No Sample	--	--	--	--	--	0	PPM	LB/DAY	--	--	--
c. Total Organic Carbon (*TOC*)	No Sample	--	--	--	--	--	0	PPM	LB/DAY	--	--	--
d. Total Suspended Solids (*TSS*)	<5	<50	--	--	--	--	1	PPM	LB/DAY	--	--	--
e. Ammonia (*as N*)	<0.03	<0.3	--	--	--	--	1	PPM	LB/DAY	--	--	--
f. Flow **	VALUE 1.19		VALUE 1.19		VALUE 1.037		4	MGD	--	VALUE --		--
g. Temperature (*winter*)	VALUE No Sample		VALUE --		VALUE --		0	°C		VALUE --		--
h. Temperature (*summer*)	VALUE 19.35		VALUE --		VALUE --		1	°C		VALUE --		--
i. pH	MINIMUM No Sample	MAXIMUM 10.20	MINIMUM --	MAXIMUM --			1	STANDARD UNITS				

PART B – Mark "X" in column 2-a for each pollutant you know or have reason to believe is present. Mark "X" in column 2-b for each pollutant you believe to be absent. If you mark column 2a for any pollutant which is limited either directly, or indirectly but expressly, in an effluent limitations guideline, you must provide the results of at least one analysis for that pollutant. For other pollutants for which you mark column 2a, you must provide quantitative data or an explanation of their presence in your discharge. Complete one table for each outfall. See the instructions for additional details and requirements.

1. POLLUTANT AND CAS NO. (*if available*)	2. MARK "X" a. BELIEVED PRESENT	b. BELIEVED ABSENT	3. EFFLUENT a. MAXIMUM DAILY VALUE (1) CONCENTRATION	(2) MASS	b. MAXIMUM 30 DAY VALUE (*if available*) (1) CONCENTRATION	(2) MASS	c. LONG TERM AVRG. VALUE (*if available*) (1) CONCENTRATION	(2) MASS	d. NO. OF ANALYSES	4. UNITS a. CONCEN-TRATION	b. MASS	5. INTAKE (*optional*) a. LONG TERM AVERAGE VALUE (1) CONCENTRATION	(2) MASS	b. NO. OF ANALYSES
a. Bromide (24959-67-9)		X	No Sample	--	--	--	--	--	0	PPM	LB/DA	--	--	--
b. Chlorine, Total Residual	X		0.23	2.3	--	--	--	--	1	PPM	LB/DA	--	--	--
c. Color		X	No Sample	--	--	--	--	--	0	PCU	--	--	--	--
d. Fecal Coliform		X	No Sample	--	--	--	--	--	0	COL/0.1L	--	--	--	--
e. Fluoride (16984-48-8)		X	<0.12	<1.2	--	--	--	--	1	PPM	LB/DA	--	--	--
f. Nitrate-Nitrite (*as N*)		X	<0.21	<2.1	--	--	--	--	1	PPM	LB/DA	--	--	--

* Values are based on 2015 measured data (or as otherwise indicated).

** Values are based on Internal Outfall 501 data in 2013 VPDES Permit Reissuance Application.

000222229

Interim & Final Configuration*

ITEM V-B CONTINUED FROM FRONT

1. POLLUTANT AND CAS NO. (if available)	2. MARK "X"		3. EFFLUENT							4. UNITS		5. INTAKE (optional)		
	a. BELIEVED PRESENT	b. BELIEVED ABSENT	a. MAXIMUM DAILY VALUE		b. MAXIMUM 30 DAY VALUE (if available)		c. LONG TERM AVRG. VALUE (if available)		d. NO. OF ANALYSES	a. CONCEN-TRATION	b. MASS	a. LONG TERM AVERAGE VALUE		b. NO. OF ANALYSES
			(1) CONCENTRATION	(2) MASS	(1) CONCENTRATION	(2) MASS	(1) CONCENTRATION	(2) MASS				(1) CONCENTRATION	(2) MASS	
g. Nitrogen, Total Organic (as N)		X	No Sample	--	--	--	--	--	0	PPM	LB/DA	--	--	--
h. Oil and Grease	X		<0.5	<5	--	--	--	--	1	PPM	LB/DA	--	--	--
i. Phosphorus (as P), Total (7723-14-0)	X		0.16	1.6	--	--	--	--	1	PPM	LB/DA	--	--	--
j. Radioactivity														
(1) Alpha, Total		X	No Sample	--	--	--	--	--	0	pCi/L	--	--	--	--
(2) Beta, Total		X	No Sample	--	--	--	--	--	0	pCi/L	--	--	--	--
(3) Radium, Total		X	No Sample	--	--	--	--	--	0	pCi/L	--	--	--	--
(4) Radium 226, Total		X	No Sample	--	--	--	--	--	0	pCi/L	--	--	--	--
k. Sulfate (as SO_4) (14808-79-8)	X		129	1290	--	--	--	--	1	PPM	LB/DA	--	--	--
l. Sulfide (as S)		X	<0.35	<3.5	--	--	--	--	1	PPM	LB/DA	--	--	--
m. Sulfite (as SO_3) (14265-45-3)		X	No Sample	--	--	--	--	--	0	PPM	LB/DA	--	--	--
n. Surfactants		X	No Sample	--	--	--	--	--	0	PPM	LB/DA	--	--	--
o. Aluminum, Total (7429-90-5)	X		0.10	1.0	--	--	--	--	1	PPM	LB/DA	--	--	--
p. Barium, Total (7440-39-3)	X		0.022	0.219	--	--	--	--	1	PPM	LB/DA	--	--	--
q. Boron, Total (7440-42-8)		X	<0.016	<0.159	--	--	--	--	1	PPM	LB/DA	--	--	--
r. Cobalt, Total (7440-48-4)		X	<0.00083	<0.009	--	--	--	--	1	PPM	LB/DA	--	--	--
s. Iron, Total (7439-89-6)	X		0.065	0.646	--	--	--	--	1	PPM	LB/DA	--	--	--
t. Magnesium, Total (7439-95-4)	X		7.3	73	--	--	--	--	1	PPM	LB/DA	--	--	--
u. Molybdenum, Total (7439-98-7)	X		0.0018	0.018	--	--	--	--	1	PPM	LB/DA	--	--	--
v. Manganese, Total (7439-96-5)	X		0.012	0.120	--	--	--	--	1	PPM	LB/DA	--	--	--
w. Tin, Total (7440-31-5)		X	No Sample	--	--	--	--	--	0	PPM	LB/DA	--	--	--
x. Titanium, Total (7440-32-6)		X	No Sample	--	--	--	--	--	0	PPM	LB/DA	--	--	--

 CONTINUE ON PAGE V-3

* Values are based on 2015 measured data.

00022230

EPA I.D. NUMBER (*copy from Item 1 of Form 1*)	OUTFALL NUMBER
110000340774	501

Interim & Final Configuration*

CONTINUED FROM PAGE 3 OF FORM 2-C

PART C - If you are a primary industry and this outfall contains process wastewater, refer to Table 2c-2 in the instructions to determine which of the GC/MS fractions you must test for. Mark "X" in column 2-a for all such GC/MS fractions that apply to your industry and for ALL toxic metals, cyanides, and total phenols. If you are not required to mark column 2-a (*secondary industries, nonprocess wastewater outfalls, and nonrequired GC/MS fractions*), mark "X" in column 2-b for each pollutant you know or have reason to believe is present. Mark "X" in column 2-c for each pollutant you believe is absent. If you mark column 2a for any pollutant, you must provide the results of at least one analysis for that pollutant. If you mark column 2b for any pollutant, you must provide the results of at least one analysis for that pollutant if you know or have reason to believe it will be discharged in concentrations of 10 ppb or greater. If you mark column 2b for acrolein, acrylonitrile, 2,4 dinitrophenol, or 2-methyl-4, 6 dinitrophenol, you must provide the results of at least one analysis for each of these pollutants which you know or have reason to believe that you discharge in concentrations of 100 ppb or greater. Otherwise, for pollutants for which you mark column 2b, you must either submit at least one analysis or briefly describe the reasons the pollutant is expected to be discharged. Note that there are 7 pages to this part; please review each carefully. Complete one table (*all 7 pages*) for each outfall. See instructions for additional details and requirements.

1. POLLUTANT AND CAS NUMBER (*if available*)	2. MARK "X"			3. EFFLUENT							4. UNITS		5. INTAKE (*optional*)		
	a. TESTING REQUIRED	b. BELIEVED PRESENT	c. BELIEVED ABSENT	a. MAXIMUM DAILY VALUE		b. MAXIMUM 30 DAY VALUE (*if available*)		c. LONG TERM AVRG. VALUE (*if available*)		d. NO. OF ANALYSES	a. CONCEN-TRATION	b. MASS	a. LONG TERM AVERAGE VALUE		b. NO. OF ANALYSES
				(1) CONCENTRATION	(2) MASS	(1) CONCENTRATION	(2) MASS	(1) CONCENTRATION	(2) MASS				(1) CONCENTRATION	(2) MASS	
METALS, CYANIDE, AND TOTAL PHENOLS															
1M. Antimony, Total (7440-36-0)			X	<0.00033	<0.004	--	--	--	--	1	PPM	LB/DAY	--	--	--
2M. Arsenic, Total (7440-38-2)			X	<0.0005	<0.005	--	--	--	--	1	PPM	LB/DAY	--	--	--
3M. Beryllium, Total (7440-41-7)			X	<0.0001	<0.001	--	--	--	--	1	PPM	LB/DAY	--	--	--
4M. Cadmium, Total (7440-43-9)			X	<0.00016	<0.002	--	--	--	--	1	PPM	LB/DAY	--	--	--
5M. Chromium, Total (7440-47-3)			X	<0.00033	<0.004	--	--	--	--	1	PPM	LB/DAY	--	--	--
6M. Copper, Total (7440-50-8)	X	X		<0.0038	<0.038	--	--	--	--	1	PPM	LB/DAY	--	--	--
7M. Lead, Total (7439-92-1)			X	<0.00033	<0.004	--	--	--	--	1	PPM	LB/DAY	--	--	--
8M. Mercury, Total (7439-97-6)			X	<0.00016	<0.002	--	--	--	--	1	PPM	LB/DAY	--	--	--
9M. Nickel, Total (7440-02-0)		X		0.023	0.229	--	--	--	--	1	PPM	LB/DAY	--	--	--
10M. Selenium, Total (7782-49-2)			X	<0.00066	<0.007	--	--	--	--	1	PPM	LB/DAY	--	--	--
11M. Silver, Total (7440-22-4)			X	<0.00033	<0.004	--	--	--	--	1	PPM	LB/DAY	--	--	--
12M. Thallium, Total (7440-28-0)			X	<0.00016	<0.002	--	--	--	--	1	PPM	LB/DAY	--	--	--
13M. Zinc, Total (7440-66-6)		X		0.0042	0.042	--	--	--	--	1	PPM	LB/DAY	--	--	--
14M. Cyanide, Total (57-12-5)			X	<0.00058	<0.006	--	--	--	--	1	PPM	LB/DAY	--	--	--
15M. Phenols, Total			X	No Sample	--	--	--	--	--	0	PPM	LB/DAY	--	--	--
DIOXIN															
2,3,7,8-Tetra-chlorodibenzo-P-Dioxin (1764-01-6)			X	DESCRIBE RESULTS No Sample											

* Values are based on 2015 measured data.

00022231

Interim & Final Configuration*

CONTINUED FROM THE FRONT

1. POLLUTANT AND CAS NUMBER (*if available*)	2. MARK "X"			3. EFFLUENT							4. UNITS		5. INTAKE (*optional*)		
	a. TESTING REQUIRED	b. BELIEVED PRESENT	c. BELIEVED ABSENT	a. MAXIMUM DAILY VALUE		b. MAXIMUM 30 DAY VALUE (*if available*)		c. LONG TERM AVRG. VALUE (*if available*)		d. NO. OF ANALYSES	a. CONCEN-TRATION	b. MASS	a. LONG TERM AVERAGE VALUE		b. NO. OF ANALYSES
				(1) CONCENTRATION	(2) MASS	(1) CONCENTRATION	(2) MASS	(1) CONCENTRATION	(2) MASS				(1) CONCENTRATION	(2) MASS	
GC/MS FRACTION – VOLATILE COMPOUNDS															
1V. Acrolein (107-02-8)			X	<2.4	<0.03	--	--	--	--	1	PPB	LB/DAY	--	--	--
2V. Acrylonitrile (107-13-1)			X	<0.89	<0.01	--	--	--	--	1	PPB	LB/DAY	--	--	--
3V. Benzene (71-43-2)			X	<0.16	<0.01	--	--	--	--	1	PPB	LB/DAY	--	--	--
4V. Bis (*Chloromethyl*) Ether (542-88-1)				*DELISTED 02-4-1981* ANALYSIS NOT REQUIRED FOR THIS PARAMETER											
5V. Bromoform (75-25-2)			X	<0.21	<0.01	--	--	--	--	1	PPB	LB/DAY	--	--	--
6V. Carbon Tetrachloride (56-23-5)			X	<0.24	<0.01	--	--	--	--	1	PPB	LB/DAY	--	--	--
7V. Chlorobenzene (108-90-7)			X	<0.11	<0.01	--	--	--	--	1	PPB	LB/DAY	--	--	--
8V. Chlorodibromomethane (124-48-1)			X	<0.22	<0.01	--	--	--	--	1	PPB	LB/DAY	--	--	--
9V. Chloroethane (75-00-3)			X	No Sample	--	--	--	--	--	0	PPB	LB/DAY	--	--	--
10V. 2-Chloroethylvinyl Ether (110-75-8)			X	No Sample	--	--	--	--	--	0	PPB	LB/DAY	--	--	--
11V. Chloroform (67-66-3)			X	<0.15	<0.01	--	--	--	--	1	PPB	LB/DAY	--	--	--
12V. Dichlorobromomethane (75-27-4)			X	<0.13	<0.01	--	--	--	--	1	PPB	LB/DAY	--	--	--
13V. Dichlorodifluoromethane (75-71-8)				*DELISTED 01-8-1981* ANALYSIS NOT REQUIRED FOR THIS PARAMETER											
14V. 1,1-Dichloroethane (75-34-3)			X	No Sample	--	--	--	--	--	0	PPB	LB/DAY	--	--	--
15V. 1,2-Dichloroethane (107-06-2)			X	<0.22	<0.01	--	--	--	--	1	PPB	LB/DAY	--	--	--
16V. 1,1-Dichloroethylene (75-35-4)			X	<0.17	<0.01	--	--	--	--	1	PPB	LB/DAY	--	--	--
17V. 1,2-Dichloropropane (78-87-5)			X	<0.24	<0.01	--	--	--	--	1	PPB	LB/DAY	--	--	--
18V. 1,3-Dichloropropylene (542-75-6)			X	<0.19	<0.01	--	--	--	--	1	PPB	LB/DAY	--	--	--
19V. Ethylbenzene (100-41-4)			X	<0.16	<0.01	--	--	--	--	1	PPB	LB/DAY	--	--	--
20V. Methyl Bromide (74-83-9)			X	<0.27	<0.01	--	--	--	--	1	PPB	LB/DAY	--	--	--
21V. Methyl Chloride (74-87-3)			X	No Sample	--	--	--	--	--	0	PPB	LB/DAY	--	--	--

CONTINUE ON PAGE V-5

* Values are based on 2015 measured data.

00022232

Interim & Final Configuration*

CONTINUED FROM PAGE V-4

1. POLLUTANT AND CAS NUMBER (if available)	2. MARK "X"			3. EFFLUENT							4. UNITS		5. INTAKE (optional)		
	a. TESTING REQUIRED	b. BELIEVED PRESENT	c. BELIEVED ABSENT	a. MAXIMUM DAILY VALUE		b. MAXIMUM 30 DAY VALUE (if available)		c. LONG TERM AVRG. VALUE (if available)		d. NO. OF ANALYSES	a. CONCEN-TRATION	b. MASS	a. LONG TERM AVERAGE VALUE		b. NO. OF ANALYSES
				(1) CONCENTRATION	(2) MASS	(1) CONCENTRATION	(2) MASS	(1) CONCENTRATION	(2) MASS				(1) CONCENTRATION	(2) MASS	
GC/MS FRACTION – VOLATILE COMPOUNDS (continued)															
22V. Methylene Chloride (75-09-2)			X	<0.32	<0.01	--	--	--	--	1	PPB	LB/DAY	--	--	--
23V. 1,1,2,2-Tetrachloroethane (79-34-5)			X	<0.22	<0.01	--	--	--	--	1	PPB	LB/DAY	--	--	--
24V. Tetrachloro-ethylene (127-18-4)			X	<0.26	<0.01	--	--	--	--	1	PPB	LB/DAY	--	--	--
25V. Toluene (108-88-3)			X	<0.12	<0.01	--	--	--	--	1	PPB	LB/DAY	--	--	--
26V. 1,2-Trans-Dichloroethylene (156-60-5)			X	<0.12	<0.01	--	--	--	--	1	PPB	LB/DAY	--	--	--
27V. 1,1,1-Trichloro-ethane (71-55-6)			X	No Sample	--	--	--	--	--	0	PPB	LB/DAY	--	--	--
28V. 1,1,2-Trichloro-ethane (79-00-5)			X	<0.3	<0.1	--	--	--	--	1	PPB	LB/DAY	--	--	--
29V Trichloro-ethylene (79-01-6)			X	<0.21	<0.01	--	--	--	--	1	PPB	LB/DAY	--	--	--
30V. Trichloro-fluoromethane (75-69-4)				*DELISTED 01-8-1981* ANALYSIS NOT REQUIRED FOR THIS PARAMETER											
31V. Vinyl Chloride (75-01-4)			X	<0.24	<0.01	--	--	--	--	1	PPB	LB/DAY	--	--	--
GC/MS FRACTION – ACID COMPOUNDS															
1A. 2-Chlorophenol (95-57-8)			X	<0.59	<0.01	--	--	--	--	1	PPB	LB/DAY	--	--	--
2A. 2,4-Dichloro-phenol (120-83-2)			X	<0.46	<0.01	--	--	--	--	1	PPB	LB/DAY	--	--	--
3A. 2,4-Dimethyl-phenol (105-67-9)			X	<2.9	<0.03	--	--	--	--	1	PPB	LB/DAY	--	--	--
4A. 4,6-Dinitro-O-Cresol (534-52-1)			X	<1.3	<0.02	--	--	--	--	1	PPB	LB/DAY	--	--	--
5A. 2,4-Dinitro-phenol (51-28-5)			X	<2.3	<0.03	--	--	--	--	1	PPB	LB/DAY	--	--	--
6A. 2-Nitrophenol (88-75-5)			X	No Sample	--	--	--	--	--	0	PPB	LB/DAY	--	--	--
7A. 4-Nitrophenol (100-02-7)			X	No Sample	--	--	--	--	--	0	PPB	LB/DAY	--	--	--
8A. P-Chloro-M-Cresol (59-50-7)			X	No Sample	--	--	--	--	--	0	PPB	LB/DAY	--	--	--
9A. Pentachloro-phenol (87-86-5)			X	<1.8	<0.02	--	--	--	--	1	PPB	LB/DAY	--	--	--
10A. Phenol (108-95-2)			X	<0.22	<0.01	--	--	--	--	1	PPB	LB/DAY	--	--	--
11A. 2,4,6-Trichloro-phenol (88-05-2)			X	<0.35	<0.01	--	--	--	--	1	PPB	LB/DAY	--	--	--

* Values are based on 2015 measured data.

00022233

Interim & Final Configuration*

CONTINUED FROM THE FRONT

1. POLLUTANT AND CAS NUMBER (*if available*)	2. MARK "X"			3. EFFLUENT							4. UNITS		5. INTAKE (*optional*)		
	a. TESTING REQUIRED	b. BELIEVED PRESENT	c. BELIEVED ABSENT	a. MAXIMUM DAILY VALUE		b. MAXIMUM 30 DAY VALUE (*if available*)		c. LONG TERM AVRG. VALUE (*if available*)		d. NO. OF ANALYSES	a. CONCEN-TRATION	b. MASS	a. LONG TERM AVERAGE VALUE		b. NO. OF ANALYSES
				(1) CONCENTRATION	(2) MASS	(1) CONCENTRATION	(2) MASS	(1) CONCENTRATION	(2) MASS				(1) CONCENTRATION	(2) MASS	
GC/MS FRACTION – BASE/NEUTRAL COMPOUNDS															
1B. Acenaphthene (83-32-9)			X	<0.33	<0.01	--	--	--	--	1	PPB	LB/DAY	--	--	--
2B. Acenaphtylene (208-96-8)			X	No Sample	--	--	--	--	--	0	PPB	LB/DAY	--	--	--
3B. Anthracene (120-12-7)			X	<0.33	<0.01	--	--	--	--	1	PPB	LB/DAY	--	--	--
4B. Benzidine (92-87-5)			X	<22.3	<0.222	--	--	--	--	1	PPB	LB/DAY	--	--	--
5B. Benzo (*a*) Anthracene (56-55-3)			X	<0.3	<0.1	--	--	--	--	1	PPB	LB/DAY	--	--	--
6B. Benzo (*a*) Pyrene (50-32-8)			X	<0.35	<0.01	--	--	--	--	1	PPB	LB/DAY	--	--	--
7B. 3,4-Benzo-fluoranthene (205-99-2)			X	<0.41	<0.01	--	--	--	--	1	PPB	LB/DAY	--	--	--
8B. Benzo (*ghi*) Perylene (191-24-2)			X	No Sample	--	--	--	--	--	0	PPB	LB/DAY	--	--	--
9B. Benzo (*k*) Fluoranthene (207-08-9)			X	<0.37	<0.01	--	--	--	--	1	PPB	LB/DAY	--	--	--
10B. Bis (*2-Chloro-ethoxy*) Methane (111-91-1)			X	No Sample	--	--	--	--	--	0	PPB	LB/DAY	--	--	--
11B. Bis (*2-Chloro-ethyl*) Ether (111-44-4)			X	<0.34	<0.01	--	--	--	--	1	PPB	LB/DAY	--	--	--
12B. Bis (*2-Chloroisopropyl*) Ether (102-80-1)			X	<0.49	<0.01	--	--	--	--	1	PPB	LB/DAY	--	--	--
13B. Bis (*2-Ethyl-hexyl*) Phthalate (117-81-7)			X	<0.34	<0.01	--	--	--	--	1	PPB	LB/DAY	--	--	--
14B. 4-Bromophenyl Phenyl Ether (101-55-3)			X	No Sample	--	--	--	--	--	0	PPB	LB/DAY	--	--	--
15B. Butyl Benzyl Phthalate (85-68-7)			X	<0.33	<0.01	--	--	--	--	1	PPB	LB/DAY	--	--	--
16B. 2-Chloro-naphthalene (91-58-7)			X	<0.33	<0.01	--	--	--	--	1	PPB	LB/DAY	--	--	--
17B. 4-Chloro-phenyl Phenyl Ether (7005-72-3)			X	No Sample	--	--	--	--	--	0	PPB	LB/DAY	--	--	--
18B. Chrysene (218-01-9)			X	<0.34	<0.01	--	--	--	--	1	PPB	LB/DAY	--	--	--
19B. Dibenzo (*a,h*) Anthracene (53-70-3)			X	<0.29	<0.01	--	--	--	--	1	PPB	LB/DAY	--	--	--
20B. 1,2-Dichloro-benzene (95-50-1)			X	<0.2	<0.1	--	--	--	--	1	PPB	LB/DAY	--	--	--
21B. 1,3-Di-chloro-benzene (541-73-1)			X	<0.14	<0.01	--	--	--	--	1	PPB	LB/DAY	--	--	--

CONTINUE ON PAGE V-7

* Values are based on 2015 measured data.

00022234

Interim & Final Configuration*

CONTINUED FROM PAGE V-6

1. POLLUTANT AND CAS NUMBER (*if available*)	2. MARK "X"			3. EFFLUENT							4. UNITS		5. INTAKE (*optional*)		
	a. TESTING REQUIRED	b. BELIEVED PRESENT	c. BELIEVED ABSENT	a. MAXIMUM DAILY VALUE		b. MAXIMUM 30 DAY VALUE (*if available*)		c. LONG TERM AVRG. VALUE (*if available*)		d. NO. OF ANALYSES	a. CONCEN-TRATION	b. MASS	a. LONG TERM AVERAGE VALUE		b. NO. OF ANALYSES
				(1) CONCENTRATION	(2) MASS	(1) CONCENTRATION	(2) MASS	(1) CONCENTRATION	(2) MASS				(1) CONCENTRATION	(2) MASS	
GC/MS FRACTION – BASE/NEUTRAL COMPOUNDS (*continued*)															
22B. 1,4-Dichloro-benzene (106-46-7)			X	<0.15	<0.01	--	--	--	--	1	PPB	LB/DAY	--	--	--
23B. 3,3-Dichloro-benzidine (91-94-1)			X	<0.28	<0.01	--	--	--	--	1	PPB	LB/DAY	--	--	--
24B. Diethyl Phthalate (84-66-2)			X	<0.3	<0.1	--	--	--	--	1	PPB	LB/DAY	--	--	--
25B. Dimethyl Phthalate (131 -11-3)			X	<0.37	<0.01	--	--	--	--	1	PPB	LB/DAY	--	--	--
26B. Di-N-Butyl Phthalate (84-74-2)			X	<0.31	<0.01	--	--	--	--	1	PPB	LB/DAY	--	--	--
27B. 2,4-Dinitro-toluene (121-14-2)			X	<0.37	<0.01	--	--	--	--	1	PPB	LB/DAY	--	--	--
28B. 2,6-Dinitro-toluene (606-20-2)			X	No Sample	--	--	--	--	--	0	PPB	LB/DAY	--	--	--
29B. Di-N-Octyl Phthalate (117-84-0)			X	No Sample	--	--	--	--	--	0	PPB	LB/DAY	--	--	--
30B. 1,2-Diphenyl-hydrazine (as *Azo-benzene*) (122-66-7)			X	<0.32	<0.01	--	--	--	--	1	PPB	LB/DAY	--	--	--
31B. Fluoranthene (206-44-0)			X	<0.25	<0.01	--	--	--	--	1	PPB	LB/DAY	--	--	--
32B. Fluorene (86-73-7)			X	<0.36	<0.01	--	--	--	--	1	PPB	LB/DAY	--	--	--
33B. Hexachloro-benzene (118-74-1)			X	<0.3	<0.1	--	--	--	--	1	PPB	LB/DAY	--	--	--
34B. Hexachloro-butadiene (87-68-3)			X	<0.29	<0.01	--	--	--	--	1	PPB	LB/DAY	--	--	--
35B. Hexachloro-cyclopentadiene (77-47-4)			X	<1	<0.1	--	--	--	--	1	PPB	LB/DAY	--	--	--
36B Hexachloro-ethane (67-72-1)			X	<0.32	<0.01	--	--	--	--	1	PPB	LB/DAY	--	--	--
37B. Indeno (1,2,3-*cd*) Pyrene (193-39-5)			X	<0.29	<0.01	--	--	--	--	1	PPB	LB/DAY	--	--	--
38B. Isophorone (78-59-1)			X	<0.38	<0.01	--	--	--	--	1	PPB	LB/DAY	--	--	--
39B. Naphthalene (91-20-3)			X	No Sample	--	--	--	--	--	0	PPB	LB/DAY	--	--	--
40B. Nitrobenzene (98-95-3)			X	<0.6	<0.1			--	--	1	PPB	LB/DAY	--	--	--
41B. N-Nitro-sodimethylamine (62-75-9)			X	<0.45	<0.01	--	--	--	--	1	PPB	LB/DAY	--	--	--
42B. N-Nitrosodi-N-Propylamine (621-64-7)			X	<0.53	<0.01	--	--	--	--	1	PPB	LB/DAY	--	--	--

CONTINUE ON REVERSE

* Values are based on 2015 measured data.

00022235

Interim & Final Configuration*

CONTINUED FROM THE FRONT

1. POLLUTANT AND CAS NUMBER (if available)	2. MARK "X"			3. EFFLUENT							4. UNITS		5. INTAKE (optional)		
	a. TESTING REQUIRED	b. BELIEVED PRESENT	c. BELIEVED ABSENT	a. MAXIMUM DAILY VALUE		b. MAXIMUM 30 DAY VALUE (if available)		c. LONG TERM AVRG. VALUE (if available)		d. NO. OF ANALYSES	a. CONCEN-TRATION	b. MASS	a. LONG TERM AVERAGE VALUE		b. NO. OF ANALYSES
				(1) CONCENTRATION	(2) MASS	(1) CONCENTRATION	(2) MASS	(1) CONCENTRATION	(2) MASS				(1) CONCENTRATION	(2) MASS	
GC/MS FRACTION – BASE/NEUTRAL COMPOUNDS (continued)															
43B. N-Nitro-sodiphenylamine (86-30-6)			X	<1	<0.1	--	--	--	--	1	PPB	LB/DAY	--	--	--
44B. Phenanthrene (85-01-8)			X	No Sample	--	--	--	--	--	0	PPB	LB/DAY	--	--	--
45B. Pyrene (129-00-0)			X	<0.34	<0.01	--	--	--	--	1	PPB	LB/DAY	--	--	--
46B. 1,2,4-Tri-chlorobenzene (120-82-1)			X	<0.26	<0.01	--	--	--	--	1	PPB	LB/DAY	--	--	--
GC/MS FRACTION – PESTICIDES															
1P. Aldrin (309-00-2)			X	<0.0006	<0.001	--	--	--	--	1	PPB	LB/DAY	--	--	--
2P. α-BHC (319-84-6)			X	<0.00013	<0.001	--	--	--	--	1	PPB	LB/DAY	--	--	--
3P. β-BHC (319-85-7)			X	<0.00016	<0.001	--	--	--	--	1	PPB	LB/DAY	--	--	--
4P. γ-BHC (58-89-9)			X	<0.00015	<0.001	--	--	--	--	1	PPB	LB/DAY	--	--	--
5P. δ-BHC (319-86-8)			X	<0.00024	<0.001	--	--	--	--	1	PPB	LB/DAY	--	--	--
6P. Chlordane (57-74-9)			X	<0.013	<0.001	--	--	--	--	1	PPB	LB/DAY	--	--	--
7P. 4,4'-DDT (50-29-3)			X	<0.00023	<0.001	--	--	--	--	1	PPB	LB/DAY	--	--	--
8P. 4,4'-DDE (72-55-9)			X	<0.00016	<0.001	--	--	--	--	1	PPB	LB/DAY	--	--	--
9P. 4,4'-DDD (72-54-8)			X	<0.00016	<0.001	--	--	--	--	1	PPB	LB/DAY	--	--	--
10P. Dieldrin (60-57-1)			X	<0.00013	<0.001	--	--	--	--	1	PPB	LB/DAY	--	--	--
11P. α-Endosulfan (115-29-7)			X	<0.00028	<0.001	--	--	--	--	1	PPB	LB/DAY	--	--	--
12P. β-Endosulfan (115-29-7)			X	<0.00014	<0.001	--	--	--	--	1	PPB	LB/DAY	--	--	--
13P. Endosulfan Sulfate (1031-07-8)			X	<0.0002	<0.001	--	--	--	--	1	PPB	LB/DAY	--	--	--
14P. Endrin (72-20-8)			X	<0.00015	<0.001	--	--	--	--	1	PPB	LB/DAY	--	--	--
15P. Endrin Aldehyde (7421-93-4)			X	<0.00031	<0.001	--	--	--	--	1	PPB	LB/DAY	--	--	--
16P. Heptachlor (76-44-8)			X	<0.0003	<0.001	--	--	--	--	1	PPB	LB/DAY	--	--	--

CONTINUE ON PAGE V-9

* Values are based on 2015 measured data.

00022236

EPA I.D. NUMBER (*copy from Item 1 of Form 1*)	OUTFALL NUMBER
110000340774	501

Interim & Final Configuration*

CONTINUED FROM PAGE V-8

1. POLLUTANT AND CAS NUMBER (*if available*)	2. MARK "X"			3. EFFLUENT							4. UNITS		5. INTAKE (*optional*)		
	a. TESTING REQUIRED	b. BELIEVED PRESENT	c. BELIEVED ABSENT	a. MAXIMUM DAILY VALUE		b. MAXIMUM 30 DAY VALUE (*if available*)		c. LONG TERM AVRG. VALUE (*if available*)		d. NO. OF ANALYSES	a. CONCEN-TRATION	b. MASS	a. LONG TERM AVERAGE VALUE		b. NO. OF ANALYSES
				(1) CONCENTRATION	(2) MASS	(1) CONCENTRATION	(2) MASS	(1) CONCENTRATION	(2) MASS				(1) CONCENTRATION	(2) MASS	
GC/MS FRACTION – PESTICIDES (*continued*)															
17P. Heptachlor Epoxide (1024-57-3)			X	<0.00016	<0.001	--	--	--	--	1	PPB	LB/DAY	--	--	--
18P. PCB-1242 (53469-21-9)			X	No Sample	--	--	--	--	--	0	PPB	LB/DAY	--	--	--
19P. PCB-1254 (11097-69-1)			X	No Sample	--	--	--	--	--	0	PPB	LB/DAY	--	--	--
20P. PCB-1221 (11104-28-2)			X	No Sample	--	--	--	--	--	0	PPB	LB/DAY	--	--	--
21P. PCB-1232 (11141-16-5)			X	No Sample	--	--	--	--	--	0	PPB	LB/DAY	--	--	--
22P. PCB-1248 (12672-29-6)			X	No Sample	--	--	--	--	--	0	PPB	LB/DAY	--	--	--
23P. PCB-1260 (11096-82-5)			X	No Sample	--	--	--	--	--	0	PPB	LB/DAY	--	--	--
24P. PCB-1016 (12674-11-2)			X	No Sample	--	--	--	--	--	0	PPB	LB/DAY	--	--	--
25P. Toxaphene (8001-35-2)			X	<0.0098	<0.001	--	--	--	--	1	PPB	LB/DAY	--	--	--

* Values are based on 2015 measured data.

00022237

PLEASE PRINT OR TYPE IN THE UNSHADED AREAS ONLY. You may report some or all of this information on separate sheets (*use the same format*) instead of completing these pages.
SEE INSTRUCTIONS.

EPA I.D. NUMBER (*copy from Item 1 of Form 1*)
110000340774

Interim & Final Configuration*

V. INTAKE AND EFFLUENT CHARACTERISTICS *(continued from page 3 of Form 2-C)* [redacted] OUTFALL NO. 502

PART A –You must provide the results of at least one analysis for every pollutant in this table. Complete one table for each outfall. See instructions for additional details.

1. POLLUTANT	2. EFFLUENT a. MAXIMUM DAILY VALUE (1) CONCENTRATION	(2) MASS	b. MAXIMUM 30 DAY VALUE (*if available*) (1) CONCENTRATION	(2) MASS	c. LONG TERM AVRG. VALUE (*if available*) (1) CONCENTRATION	(2) MASS	d. NO. OF ANALYSES	3. UNITS (*specify if blank*) a. CONCEN-TRATION	b. MASS	4. INTAKE (*optional*) a. LONG TERM AVERAGE VALUE (1) CONCENTRATION	(2) MASS	b. NO. OF ANALYSES
a. Biochemical Oxygen Demand (*BOD*)	3.4	17	--	--	--	--	1	PPM	LB/DAY	--	--	--
b. Chemical Oxygen Demand (*COD*)	No Sample	--	--	--	--	--	0	PPM	LB/DAY	--	--	--
c. Total Organic Carbon (*TOC*)	No Sample	--	--	--	--	--	0	PPM	LB/DAY	--	--	--
d. Total Suspended Solids (*TSS*)	10	48	--	--	--	--	1	PPM	LB/DAY	--	--	--
e. Ammonia (*as N*)	0.108	0.512	--	--	--	--	1	PPM	LB/DAY	--	--	--
f. Flow **	VALUE 0.567		VALUE 0.567		VALUE 0.567		35	MGD	--	VALUE --		--
g. Temperature (*winter*)	VALUE No Sample		VALUE --		VALUE --		0	°C		VALUE --		--
h. Temperature (*summer*)	VALUE 22.38		VALUE --		VALUE --		1	°C		VALUE --		--
i. pH	MINIMUM No Sample	MAXIMUM 8.52	MINIMUM --	MAXIMUM --			1	STANDARD UNITS				

PART B – Mark "X" in column 2-a for each pollutant you know or have reason to believe is present. Mark "X" in column 2-b for each pollutant you believe to be absent. If you mark column 2a for any pollutant which is limited either directly, or indirectly but expressly, in an effluent limitations guideline, you must provide the results of at least one analysis for that pollutant. For other pollutants for which you mark column 2a, you must provide quantitative data or an explanation of their presence in your discharge. Complete one table for each outfall. See the instructions for additional details and requirements.

1. POLLUTANT AND CAS NO. (*if available*)	2. MARK "X" a. BELIEVED PRESENT	b. BELIEVED ABSENT	3. EFFLUENT a. MAXIMUM DAILY VALUE (1) CONCENTRATION	(2) MASS	b. MAXIMUM 30 DAY VALUE (*if available*) (1) CONCENTRATION	(2) MASS	c. LONG TERM AVRG. VALUE (*if available*) (1) CONCENTRATION	(2) MASS	d. NO. OF ANALYSES	4. UNITS a. CONCEN-TRATION	b. MASS	5. INTAKE (*optional*) a. LONG TERM AVERAGE VALUE (1) CONCENTRATION	(2) MASS	b. NO. OF ANALYSES
a. Bromide (24959-67-9)		X	No Sample	--	--	--	--	--	0	PPM	LB/DA	--	--	--
b. Chlorine, Total Residual		X	0	0	--	--	--	--	1	PPM	LB/DA	--	--	--
c. Color		X	No Sample	--	--	--	--	--	0	PCU	--	--	--	--
d. Fecal Coliform		X	No Sample	--	--	--	--	--	0	COL/0.1L	--	--	--	--
e. Fluoride (16984-48-8)		X	<0.12	<0.57	--	--	--	--	1	PPM	LB/DA	--	--	--
f. Nitrate-Nitrite (*as N*)		X	<0.21	<1.0	--	--	--	--	1	PPM	LB/DA	--	--	--

* Values are based on 2015 measured data.
** Values are based on Internal Outfall 502 data in 2013 VPDES Permit Reissuance Application.

00022238

Interim & Final Configuration*

ITEM V-B CONTINUED FROM FRONT

1. POLLUTANT AND CAS NO. (if available)	2. MARK "X"		3. EFFLUENT							4. UNITS		5. INTAKE (optional)		
	a. BELIEVED PRESENT	b. BELIEVED ABSENT	a. MAXIMUM DAILY VALUE		b. MAXIMUM 30 DAY VALUE (if available)		c. LONG TERM AVRG. VALUE (if available)		d. NO. OF ANALYSES	a. CONCEN-TRATION	b. MASS	a. LONG TERM AVERAGE VALUE		b. NO. OF ANALYSES
			(1) CONCENTRATION	(2) MASS	(1) CONCENTRATION	(2) MASS	(1) CONCENTRATION	(2) MASS				(1) CONCENTRATION	(2) MASS	
g. Nitrogen, Total Organic (as N)		X	No Sample	--	--	--	--	--	0	PPM	LB/DA	--	--	--
h. Oil and Grease		X	<0.5	<3	--	--	--	--	1	PPM	LB/DA	--	--	--
i. Phosphorus (as P), Total (7723-14-0)	X		0.1	0.5	--	--	--	--	1	PPM	LB/DA	--	--	--
j. Radioactivity														
(1) Alpha, Total		X	No Sample	--	--	--	--	--	0	pCi/L	--	--	--	--
(2) Beta, Total		X	No Sample	--	--	--	--	--	0	pCi/L	--	--	--	--
(3) Radium, Total		X	No Sample	--	--	--	--	--	0	pCi/L	--	--	--	--
(4) Radium 226, Total		X	No Sample	--	--	--	--	--	0	pCi/L	--	--	--	--
k. Sulfate (as SO_4) (14808-79-8)	X		37.2	177	--	--	--	--	1	PPM	LB/DA	--	--	--
l. Sulfide (as S)		X	<0.35	<1.7	--	--	--	--	1	PPM	LB/DA	--	--	--
m. Sulfite (as SO_3) (14265-45-3)		X	No Sample	--	--	--	--	--	0	PPM	LB/DA	--	--	--
n. Surfactants		X	No Sample	--	--	--	--	--	0	PPM	LB/DA	--	--	--
o. Aluminum, Total (7429-90-5)	X		0.082	0.388	--	--	--	--	1	PPM	LB/DA	--	--	--
p. Barium, Total (7440-39-3)	X		0.036	0.171	--	--	--	--	1	PPM	LB/DA	--	--	--
q. Boron, Total (7440-42-8)		X	<0.016	<0.076	--	--	--	--	1	PPM	LB/DA	--	--	--
r. Cobalt, Total (7440-48-4)		X	<0.00083	<0.004	--	--	--	--	1	PPM	LB/DA	--	--	--
s. Iron, Total (7439-89-6)	X		0.69	3.3	--	--	--	--	1	PPM	LB/DA	--	--	--
t. Magnesium, Total (7439-95-4)	X		9.7	46	--	--	--	--	1	PPM	LB/DA	--	--	--
u. Molybdenum, Total (7439-98-7)	X		0.0045	0.022	--	--	--	--	1	PPM	LB/DA	--	--	--
v. Manganese, Total (7439-96-5)	X		0.14	0.67	--	--	--	--	1	PPM	LB/DA	--	--	--
w. Tin, Total (7440-31-5)		X	No Sample	--	--	--	--	--	0	PPM	LB/DA	--	--	--
x. Titanium, Total (7440-32-6)		X	No Sample	--	--	--	--	--	0	PPM	LB/DA	--	--	--

 CONTINUE ON PAGE V-3

* Values are based on 2015 measured data.

00022239

EPA I.D. NUMBER (*copy from Item 1 of Form 1*)	OUTFALL NUMBER
110000340774	502

Interim & Final Configuration*

CONTINUED FROM PAGE 3 OF FORM 2-C

PART C - If you are a primary industry and this outfall contains process wastewater, refer to Table 2c-2 in the instructions to determine which of the GC/MS fractions you must test for. Mark "X" in column 2-a for all such GC/MS fractions that apply to your industry and for ALL toxic metals, cyanides, and total phenols. If you are not required to mark column 2-a (*secondary industries, nonprocess wastewater outfalls, and nonrequired GC/MS fractions*), mark "X" in column 2-b for each pollutant you know or have reason to believe is present. Mark "X" in column 2-c for each pollutant you believe is absent. If you mark column 2a for any pollutant, you must provide the results of at least one analysis for that pollutant. If you mark column 2b for any pollutant, you must provide the results of at least one analysis for that pollutant if you know or have reason to believe it will be discharged in concentrations of 10 ppb or greater. If you mark column 2b for acrolein, acrylonitrile, 2,4 dinitrophenol, or 2-methyl-4, 6 dinitrophenol, you must provide the results of at least one analysis for each of these pollutants which you know or have reason to believe that you discharge in concentrations of 100 ppb or greater. Otherwise, for pollutants for which you mark column 2b, you must either submit at least one analysis or briefly describe the reasons the pollutant is expected to be discharged. Note that there are 7 pages to this part; please review each carefully. Complete one table (*all 7 pages*) for each outfall. See instructions for additional details and requirements.

1. POLLUTANT AND CAS NUMBER (*if available*)	2. MARK "X"			3. EFFLUENT							4. UNITS		5. INTAKE (*optional*)		
	a. TESTING REQUIRED	b. BELIEVED PRESENT	c. BELIEVED ABSENT	a. MAXIMUM DAILY VALUE		b. MAXIMUM 30 DAY VALUE (*if available*)		c. LONG TERM AVRG. VALUE (*if available*)		d. NO. OF ANALYSES	a. CONCEN-TRATION	b. MASS	a. LONG TERM AVERAGE VALUE		b. NO. OF ANALYSES
				(1) CONCENTRATION	(2) MASS	(1) CONCENTRATION	(2) MASS	(1) CONCENTRATION	(2) MASS				(1) CONCENTRATION	(2) MASS	
METALS, CYANIDE, AND TOTAL PHENOLS															
1M. Antimony, Total (7440-36-0)			X	<0.00033	<0.002	--	--	--	--	1	PPM	LB/DA	--	--	--
2M. Arsenic, Total (7440-38-2)			X	<0.0005	<0.003	--	--	--	--	1	PPM	LB/DA	--	--	--
3M. Beryllium, Total (7440-41-7)			X	<0.0001	<0.001	--	--	--	--	1	PPM	LB/DA	--	--	--
4M. Cadmium, Total (7440-43-9)			X	<0.00016	<0.001	--	--	--	--	1	PPM	LB/DA	--	--	--
5M. Chromium, Total (7440-47-3)			X	<0.00033	<0.002	--	--	--	--	1	PPM	LB/DA	--	--	--
6M. Copper, Total (7440-50-8)	X			0.015	0.071	--	--	--	--	1	PPM	LB/DA	--	--	--
7M. Lead, Total (7439-92-1)			X	<0.00033	<0.002	--	--	--	--	1	PPM	LB/DA	--	--	--
8M. Mercury, Total (7439-97-6)			X	<0.00016	<0.001	--	--	--	--	1	PPM	LB/DA	--	--	--
9M. Nickel, Total (7440-02-0)	X			0.032	0.152	--	--	--	--	1	PPM	LB/DA	--	--	--
10M. Selenium, Total (7782-49-2)			X	<0.00066	<0.004	--	--	--	--	1	PPM	LB/DA	--	--	--
11M. Silver, Total (7440-22-4)			X	<0.00033	<0.002	--	--	--	--	1	PPM	LB/DA	--	--	--
12M. Thallium, Total (7440-28-0)			X	<0.00016	<0.001	--	--	--	--	1	PPM	LB/DA	--	--	--
13M. Zinc, Total (7440-66-6)	X			0.02	0.10	--	--	--	--	1	PPM	LB/DA	--	--	--
14M. Cyanide, Total (57-12-5)			X	<0.00058	<0.003	--	--	--	--	1	PPM	LB/DA	--	--	--
15M. Phenols, Total			X	No Sample	--	--	--	--	--	0	PPM	LB/DA	--	--	--
DIOXIN															
2,3,7,8-Tetra-chlorodibenzo-P-Dioxin (1764-01-6)			X	DESCRIBE RESULTS		No Sample									

* Values are based on 2015 measured data.

00022240

Interim & Final Configuration*

CONTINUED FROM THE FRONT

1. POLLUTANT AND CAS NUMBER (if available)	2. MARK "X"			3. EFFLUENT							4. UNITS		5. INTAKE (optional)		
	a. TESTING REQUIRED	b. BELIEVED PRESENT	c. BELIEVED ABSENT	a. MAXIMUM DAILY VALUE		b. MAXIMUM 30 DAY VALUE (if available)		c. LONG TERM AVRG. VALUE (if available)		d. NO. OF ANALYSES	a. CONCEN-TRATION	b. MASS	a. LONG TERM AVERAGE VALUE		b. NO. OF ANALYSES
				(1) CONCENTRATION	(2) MASS	(1) CONCENTRATION	(2) MASS	(1) CONCENTRATION	(2) MASS				(1) CONCENTRATION	(2) MASS	
GC/MS FRACTION – VOLATILE COMPOUNDS															
1V. Accrolein (107-02-8)			X	<2.4	<0.02	--	--	--	--	1	PPB	LB/DAY	--	--	--
2V. Acrylonitrile (107-13-1)			X	<0.89	<0.01	--	--	--	--	1	PPB	LB/DAY	--	--	--
3V. Benzene (71-43-2)			X	<0.16	<0.01	--	--	--	--	1	PPB	LB/DAY	--	--	--
4V. Bis (*Chloromethyl*) Ether (542-88-1)				*DELISTED 02-4-1981* ANALYSIS NOT REQUIRED FOR THIS PARAMETER											
5V. Bromoform (75-25-2)			X	<0.21	<0.01	--	--	--	--	1	PPB	LB/DAY	--	--	--
6V. Carbon Tetrachloride (56-23-5)			X	<0.24	<0.01	--	--	--	--	1	PPB	LB/DAY	--	--	--
7V. Chlorobenzene (108-90-7)			X	<0.11	<0.01	--	--	--	--	1	PPB	LB/DAY	--	--	--
8V. Chlorodibromomethane (124-48-1)			X	<0.22	<0.01	--	--	--	--	1	PPB	LB/DAY	--	--	--
9V. Chloroethane (75-00-3)			X	No Sample	--	--	--	--	--	0	PPB	LB/DAY	--	--	--
10V. 2-Chloroethylvinyl Ether (110-75-8)			X	No Sample	--	--	--	--	--	0	PPB	LB/DAY	--	--	--
11V. Chloroform (67-66-3)			X	<0.15	<0.01	--	--	--	--	1	PPB	LB/DAY	--	--	--
12V. Dichlorobromomethane (75-27-4)			X	<0.13	<0.01	--	--	--	--	1	PPB	LB/DAY	--	--	--
13V. Dichlorodifluoromethane (75-71-8)				*DELISTED 01-8-1981* ANALYSIS NOT REQUIRED FOR THIS PARAMETER											
14V. 1,1-Dichloroethane (75-34-3)			X	No Sample	--	--	--	--	--	0	PPB	LB/DAY	--	--	--
15V. 1,2-Dichloroethane (107-06-2)			X	<0.22	<0.01	--	--	--	--	1	PPB	LB/DAY	--	--	--
16V. 1,1-Dichloroethylene (75-35-4)			X	<0.17	<0.01	--	--	--	--	1	PPB	LB/DAY	--	--	--
17V. 1,2-Dichloropropane (78-87-5)			X	<0.24	<0.01	--	--	--	--	1	PPB	LB/DAY	--	--	--
18V. 1,3-Dichloropropylene (542-75-6)			X	<0.19	<0.01	--	--	--	--	1	PPB	LB/DAY	--	--	--
19V. Ethylbenzene (100-41-4)			X	<0.16	<0.01	--	--	--	--	1	PPB	LB/DAY	--	--	--
20V. Methyl Bromide (74-83-9)			X	<0.27	<0.01	--	--	--	--	1	PPB	LB/DAY	--	--	--
21V. Methyl Chloride (74-87-3)			X	No Sample	--	--	--	--	--	0	PPB	LB/DAY	--	--	--

 CONTINUE ON PAGE V-5

* Values are based on 2015 measured data.

00022241

Interim & Final Configuration*

CONTINUED FROM PAGE V-4

1. POLLUTANT AND CAS NUMBER (if available)	2. MARK "X"			3. EFFLUENT							4. UNITS		5. INTAKE (optional)		
	a. TESTING REQUIRED	b. BELIEVED PRESENT	c. BELIEVED ABSENT	a. MAXIMUM DAILY VALUE		b. MAXIMUM 30 DAY VALUE (if available)		c. LONG TERM AVRG. VALUE (if available)		d. NO. OF ANALYSES	a. CONCEN-TRATION	b. MASS	a. LONG TERM AVERAGE VALUE		b. NO. OF ANALYSES
				(1) CONCENTRATION	(2) MASS	(1) CONCENTRATION	(2) MASS	(1) CONCENTRATION	(2) MASS				(1) CONCENTRATION	(2) MASS	
GC/MS FRACTION – VOLATILE COMPOUNDS (continued)															
22V. Methylene Chloride (75-09-2)			X	<0.32	<0.01	--	--	--	--	1	PPB	LB/DAY	--	--	--
23V. 1,1,2,2-Tetrachloroethane (79-34-5)			X	<0.22	<0.01	--	--	--	--	1	PPB	LB/DAY	--	--	--
24V. Tetrachloro-ethylene (127-18-4)			X	<0.26	<0.01	--	--	--	--	1	PPB	LB/DAY	--	--	--
25V. Toluene (108-88-3)			X	<0.12	<0.01	--	--	--	--	1	PPB	LB/DAY	--	--	--
26V. 1,2-Trans-Dichloroethylene (156-60-5)			X	<0.12	<0.01	--	--	--	--	1	PPB	LB/DAY	--	--	--
27V. 1,1,1-Trichloro-ethane (71-55-6)			X	No Sample	--	--	--	--	--	0	PPB	LB/DAY	--	--	--
28V. 1,1,2-Trichloro-ethane (79-00-5)			X	<0.3	<0.1	--	--	--	--	1	PPB	LB/DAY	--	--	--
29V Trichloro-ethylene (79-01-6)			X	<0.21	<0.01	--	--	--	--	1	PPB	LB/DAY	--	--	--
30V. Trichloro-fluoromethane (75-69-4)				DELISTED 01-8-1981	ANALYSIS NOT REQUIRED FOR THIS PARAMETER										
31V. Vinyl Chloride (75-01-4)			X	<0.24	<0.01	--	--	--	--	1	PPB	LB/DAY	--	--	--
GC/MS FRACTION – ACID COMPOUNDS															
1A. 2-Chlorophenol (95-57-8)			X	<0.59	<0.01	--	--	--	--	1	PPB	LB/DAY	--	--	--
2A. 2,4-Dichloro-phenol (120-83-2)			X	<0.46	<0.01	--	--	--	--	1	PPB	LB/DAY	--	--	--
3A. 2,4-Dimethyl-phenol (105-67-9)			X	<2.9	<0.02	--	--	--	--	1	PPB	LB/DAY	--	--	--
4A. 4,6-Dinitro-O-Cresol (534-52-1)			X	<1.3	<0.01	--	--	--	--	1	PPB	LB/DAY	--	--	--
5A. 2,4-Dinitro-phenol (51-28-5)			X	<2.3	<0.02	--	--	--	--	1	PPB	LB/DAY	--	--	--
6A. 2-Nitrophenol (88-75-5)			X	No Sample	--	--	--	--	--	0	PPB	LB/DAY	--	--	--
7A. 4-Nitrophenol (100-02-7)			X	No Sample	--	--	--	--	--	0	PPB	LB/DAY	--	--	--
8A. P-Chloro-M-Cresol (59-50-7)			X	No Sample	--	--	--	--	--	0	PPB	LB/DAY	--	--	--
9A. Pentachloro-phenol (87-86-5)			X	<1.8	<0.01	--	--	--	--	1	PPB	LB/DAY	--	--	--
10A. Phenol (108-95-2)			X	<0.23	<0.01	--	--	--	--	1	PPB	LB/DAY	--	--	--
11A. 2,4,6-Trichloro-phenol (88-05-2)			X	<0.36	<0.01	--	--	--	--	1	PPB	LB/DAY	--	--	--

* Values are based on 2015 measured data.

00022242

Interim & Final Configuration*

CONTINUED FROM THE FRONT

1. POLLUTANT AND CAS NUMBER (*if available*)	2. MARK "X"			3. EFFLUENT							4. UNITS		5. INTAKE (*optional*)		
	a. TESTING REQUIRED	b. BELIEVED PRESENT	c. BELIEVED ABSENT	a. MAXIMUM DAILY VALUE		b. MAXIMUM 30 DAY VALUE (*if available*)		c. LONG TERM AVRG. VALUE (*if available*)		d. NO. OF ANALYSES	a. CONCEN-TRATION	b. MASS	a. LONG TERM AVERAGE VALUE		b. NO. OF ANALYSES
				(1) CONCENTRATION	(2) MASS	(1) CONCENTRATION	(2) MASS	(1) CONCENTRATION	(2) MASS				(1) CONCENTRATION	(2) MASS	
GC/MS FRACTION – BASE/NEUTRAL COMPOUNDS															
1B. Acenaphthene (83-32-9)			X	<0.33	<0.01	--	--	--	--	1	PPB	LB/DAY	--	--	--
2B. Acenaphtylene (208-96-8)			X	No Sample	--	--	--	--	--	0	PPB	LB/DAY	--	--	--
3B. Anthracene (120-12-7)			X	<0.34	<0.01	--	--	--	--	1	PPB	LB/DAY	--	--	--
4B. Benzidine (92-87-5)			X	<22.5	<0.107	--	--	--	--	1	PPB	LB/DAY	--	--	--
5B. Benzo (*a*) Anthracene (56-55-3)			X	<0.3	<0.1	--	--	--	--	1	PPB	LB/DAY	--	--	--
6B. Benzo (*a*) Pyrene (50-32-8)			X	<0.36	<0.01	--	--	--	--	1	PPB	LB/DAY	--	--	--
7B. 3,4-Benzo-fluoranthene (205-99-2)			X	<0.41	<0.01	--	--	--	--	1	PPB	LB/DAY	--	--	--
8B. Benzo (*ghi*) Perylene (191-24-2)			X	No Sample	--	--	--	--	--	0	PPB	LB/DAY	--	--	--
9B. Benzo (*k*) Fluoranthene (207-08-9)			X	<0.38	<0.01	--	--	--	--	1	PPB	LB/DAY	--	--	--
10B. Bis (*2-Chloro-ethoxy*) Methane (111-91-1)			X	No Sample	--	--	--	--	--	0	PPB	LB/DAY	--	--	--
11B. Bis (*2-Chloro-ethyl*) Ether (111-44-4)			X	<0.35	<0.01	--	--	--	--	1	PPB	LB/DAY	--	--	--
12B. Bis (*2-Chloroisopropyl*) Ether (102-80-1)			X	<0.5	<0.01	--	--	--	--	1	PPB	LB/DAY	--	--	--
13B. Bis (*2-Ethyl-hexyl*) Phthalate (117-81-7)			X	<0.35	<0.01	--	--	--	--	1	PPB	LB/DAY	--	--	--
14B. 4-Bromophenyl Phenyl Ether (101-55-3)			X	No Sample	--	--	--	--	--	0	PPB	LB/DAY	--	--	--
15B. Butyl Benzyl Phthalate (85-68-7)			X	<0.33	<0.01	--	--	--	--	1	PPB	LB/DAY	--	--	--
16B. 2-Chloro-naphthalene (91-58-7)			X	<0.34	<0.01	--	--	--	--	1	PPB	LB/DAY	--	--	--
17B. 4-Chloro-phenyl Phenyl Ether (7005-72-3)			X	No Sample	--	--	--	--	--	0	PPB	LB/DAY	--	--	--
18B. Chrysene (218-01-9)			X	<0.35	<0.01	--	--	--	--	1	PPB	LB/DAY	--	--	--
19B. Dibenzo (*a,h*) Anthracene (53-70-3)			X	<0.29	<0.01	--	--	--	--	1	PPB	LB/DAY	--	--	--
20B. 1,2-Dichloro-benzene (95-50-1)			X	<0.2	<0.1	--	--	--	--	1	PPB	LB/DAY	--	--	--
21B. 1,3-Di-chloro-benzene (541-73-1)			X	<0.14	<0.01	--	--	--	--	1	PPB	LB/DAY	--	--	--

CONTINUE ON PAGE V-7

* Values are based on 2015 measured data.

00022243

Interim & Final Configuration*

CONTINUED FROM PAGE V-6

1. POLLUTANT AND CAS NUMBER (*if available*)	2. MARK "X"			3. EFFLUENT							4. UNITS		5. INTAKE (*optional*)		
	a. TESTING REQUIRED	b. BELIEVED PRESENT	c. BELIEVED ABSENT	a. MAXIMUM DAILY VALUE		b. MAXIMUM 30 DAY VALUE (*if available*)		c. LONG TERM AVRG. VALUE (*if available*)		d. NO. OF ANALYSES	a. CONCEN-TRATION	b. MASS	a. LONG TERM AVERAGE VALUE		b. NO. OF ANALYSES
				(1) CONCENTRATION	(2) MASS	(1) CONCENTRATION	(2) MASS	(1) CONCENTRATION	(2) MASS				(1) CONCENTRATION	(2) MASS	
GC/MS FRACTION – BASE/NEUTRAL COMPOUNDS (*continued*)															
22B. 1,4-Dichloro-benzene (106-46-7)			X	<0.15	<0.01	--	--	--	--	1	PPB	LB/DAY	--	--	--
23B. 3,3-Dichloro-benzidine (91-94-1)			X	<2.8	<0.02	--	--	--	--	1	PPB	LB/DAY	--	--	--
24B. Diethyl Phthalate (84-66-2)			X	<0.3	<0.1	--	--	--	--	1	PPB	LB/DAY	--	--	--
25B. Dimethyl Phthalate (131 -11-3)			X	<0.38	<0.01	--	--	--	--	1	PPB	LB/DAY	--	--	--
26B. Di-N-Butyl Phthalate (84-74-2)			X	<0.31	<0.01	--	--	--	--	1	PPB	LB/DAY	--	--	--
27B. 2,4-Dinitro-toluene (121-14-2)			X	<0.38	<0.01	--	--	--	--	1	PPB	LB/DAY	--	--	--
28B. 2,6-Dinitro-toluene (606-20-2)			X	No Sample	--	--	--	--	--	0	PPB	LB/DAY	--	--	--
29B. Di-N-Octyl Phthalate (117-84-0)			X	No Sample	--	--	--	--	--	0	PPB	LB/DAY	--	--	--
30B. 1,2-Diphenyl-hydrazine (*as Azo-benzene*) (122-66-7)			X	<0.32	<0.01	--	--	--	--	1	PPB	LB/DAY	--	--	--
31B. Fluoranthene (206-44-0)			X	<0.25	<0.01	--	--	--	--	1	PPB	LB/DAY	--	--	--
32B. Fluorene (86-73-7)			X	<0.37	<0.01	--	--	--	--	1	PPB	LB/DAY	--	--	--
33B. Hexachloro-benzene (118-74-1)			X	<0.3	<0.1	--	--	--	--	1	PPB	LB/DAY	--	--	--
34B. Hexachloro-butadiene (87-68-3)			X	<0.29	<0.01	--	--	--	--	1	PPB	LB/DAY	--	--	--
35B. Hexachloro-cyclopentadiene (77-47-4)			X	<1	<0.1	--	--	--	--	1	PPB	LB/DAY	--	--	--
36B Hexachloro-ethane (67-72-1)			X	<0.32	<0.01	--	--	--	--	1	PPB	LB/DAY	--	--	--
37B. Indeno (*1,2,3-cd*) Pyrene (193-39-5)			X	<0.29	<0.01	--	--	--	--	1	PPB	LB/DAY	--	--	--
38B. Isophorone (78-59-1)			X	<0.38	<0.01	--	--	--	--	1	PPB	LB/DAY	--	--	--
39B. Naphthalene (91-20-3)			X	No Sample	--	--	--	--	--	0	PPB	LB/DAY	--	--	--
40B. Nitrobenzene (98-95-3)			X	<0.61	<0.01	--	--	--	--	1	PPB	LB/DAY	--	--	--
41B. N-Nitro-sodimethylamine (62-75-9)			X	<0.45	<0.01	--	--	--	--	1	PPB	LB/DAY	--	--	--
42B. N-Nitrosodi-N-Propylamine (621-64-7)			X	<0.54	<0.01	--	--	--	--	1	PPB	LB/DAY	--	--	--

CONTINUE ON REVERSE

* Values are based on 2015 measured data.

00022244

Interim & Final Configuration*

CONTINUED FROM THE FRONT

1. POLLUTANT AND CAS NUMBER (if available)	2. MARK "X"			3. EFFLUENT							4. UNITS		5. INTAKE (optional)		
	a. TESTING REQUIRED	b. BELIEVED PRESENT	c. BELIEVED ABSENT	a. MAXIMUM DAILY VALUE		b. MAXIMUM 30 DAY VALUE (if available)		c. LONG TERM AVRG. VALUE (if available)		d. NO. OF ANALYSES	a. CONCEN-TRATION	b. MASS	a. LONG TERM AVERAGE VALUE		b. NO. OF ANALYSES
				(1) CONCENTRATION	(2) MASS	(1) CONCENTRATION	(2) MASS	(1) CONCENTRATION	(2) MASS				(1) CONCENTRATION	(2) MASS	
GC/MS FRACTION – BASE/NEUTRAL COMPOUNDS (continued)															
43B. N-Nitro-sodiphenylamine (86-30-6)			X	<1	<0.1	--	--	--	--	1	PPB	LB/DAY	--	--	--
44B. Phenanthrene (85-01-8)			X	No Sample	--	--	--	--	--	0	PPB	LB/DAY	--	--	--
45B. Pyrene (129-00-0)			X	<0.35	<0.01	--	--	--	--	1	PPB	LB/DAY	--	--	--
46B. 1,2,4-Tri-chlorobenzene (120-82-1)			X	<0.26	<0.01	--	--	--	--	1	PPB	LB/DAY	--	--	--
GC/MS FRACTION – PESTICIDES															
1P. Aldrin (309-00-2)			X	<0.0006	<0.001	--	--	--	--	1	PPB	LB/DAY	--	--	--
2P. α-BHC (319-84-6)			X	<0.00013	<0.001	--	--	--	--	1	PPB	LB/DAY	--	--	--
3P. β-BHC (319-85-7)			X	<0.00016	<0.001	--	--	--	--	1	PPB	LB/DAY	--	--	--
4P. γ-BHC (58-89-9)			X	<0.00015	<0.001	--	--	--	--	1	PPB	LB/DAY	--	--	--
5P. δ-BHC (319-86-8)			X	<0.00024	<0.001	--	--	--	--	1	PPB	LB/DAY	--	--	--
6P. Chlordane (57-74-9)			X	<0.013	<0.001	--	--	--	--	1	PPB	LB/DAY	--	--	--
7P. 4,4'-DDT (50-29-3)			X	<0.00023	<0.001	--	--	--	--	1	PPB	LB/DAY	--	--	--
8P. 4,4'-DDE (72-55-9)			X	<0.00016	<0.001	--	--	--	--	1	PPB	LB/DAY	--	--	--
9P. 4,4'-DDD (72-54-8)			X	<0.00016	<0.001	--	--	--	--	1	PPB	LB/DAY	--	--	--
10P. Dieldrin (60-57-1)			X	<0.00013	<0.001	--	--	--	--	1	PPB	LB/DAY	--	--	--
11P. α-Endosulfan (115-29-7)			X	<0.00028	<0.001	--	--	--	--	1	PPB	LB/DAY	--	--	--
12P. β-Endosulfan (115-29-7)			X	<0.00014	<0.001	--	--	--	--	1	PPB	LB/DAY	--	--	--
13P. Endosulfan Sulfate (1031-07-8)			X	<0.0002	<0.001	--	--	--	--	1	PPB	LB/DAY	--	--	--
14P. Endrin (72-20-8)			X	<0.00015	<0.001	--	--	--	--	1	PPB	LB/DAY	--	--	--
15P. Endrin Aldehyde (7421-93-4)			X	<0.00031	<0.001	--	--	--	--	1	PPB	LB/DAY	--	--	--
16P. Heptachlor (76-44-8)			X	<0.0003	<0.001	--	--	--	--	1	PPB	LB/DAY	--	--	--

CONTINUE ON PAGE V-9

* Values are based on 2015 measured data.

00022245

EPA I.D. NUMBER (*copy from Item 1 of Form 1*)	OUTFALL NUMBER
110000340774	502

Interim & Final Configuration*

CONTINUED FROM PAGE V-8

1. POLLUTANT AND CAS NUMBER (*if available*)	2. MARK "X"			3. EFFLUENT							4. UNITS		5. INTAKE (*optional*)		
	a. TESTING REQUIRED	b. BELIEVED PRESENT	c. BELIEVED ABSENT	a. MAXIMUM DAILY VALUE		b. MAXIMUM 30 DAY VALUE (*if available*)		c. LONG TERM AVRG. VALUE (*if available*)		d. NO. OF ANALYSES	a. CONCEN-TRATION	b. MASS	a. LONG TERM AVERAGE VALUE		b. NO. OF ANALYSES
				(1) CONCENTRATION	(2) MASS	(1) CONCENTRATION	(2) MASS	(1) CONCENTRATION	(2) MASS				(1) CONCENTRATION	(2) MASS	
GC/MS FRACTION – PESTICIDES (*continued*)															
17P. Heptachlor Epoxide (1024-57-3)			X	<0.00016	<0.001	--	--	--	--	1	PPB	LB/DAY	--	--	--
18P. PCB-1242 (53469-21-9)			X	No Sample	--	--	--	--	--	0	PPB	LB/DAY	--	--	--
19P. PCB-1254 (11097-69-1)			X	No Sample	--	--	--	--	--	0	PPB	LB/DAY	--	--	--
20P. PCB-1221 (11104-28-2)			X	No Sample	--	--	--	--	--	0	PPB	LB/DAY	--	--	--
21P. PCB-1232 (11141-16-5)			X	No Sample	--	--	--	--	--	0	PPB	LB/DAY	--	--	--
22P. PCB-1248 (12672-29-6)			X	No Sample	--	--	--	--	--	0	PPB	LB/DAY	--	--	--
23P. PCB-1260 (11096-82-5)			X	No Sample	--	--	--	--	--	0	PPB	LB/DAY	--	--	--
24P. PCB-1016 (12674-11-2)			X	No Sample	--	--	--	--	--	0	PPB	LB/DAY	--	--	--
25P. Toxaphene (8001-35-2)			X	<0.0098	<0.001	--	--	--	--	1	PPB	LB/DAY	--	--	--

* Values are based on 2015 measured data.

00022246

PLEASE PRINT OR TYPE IN THE UNSHADED AREAS ONLY. You may report some or all of this information on separate sheets (*use the same format*) instead of completing these pages. SEE INSTRUCTIONS.

EPA I.D. NUMBER (*copy from Item 1 of Form 1*): 110000340774

ALTERNATE Interim Configuration: Pond D Comingled Waters*

V. INTAKE AND EFFLUENT CHARACTERISTICS *(continued from page 3 of Form 2-C)*

OUTFALL NO. 004

PART A –You must provide the results of at least one analysis for every pollutant in this table. Complete one table for each outfall. See instructions for additional details.

1. POLLUTANT	2. EFFLUENT a. MAXIMUM DAILY VALUE (1) CONCENTRATION	(2) MASS	b. MAXIMUM 30 DAY VALUE (*if available*) (1) CONCENTRATION	(2) MASS	c. LONG TERM AVRG. VALUE (*if available*) (1) CONCENTRATION	(2) MASS	d. NO. OF ANALYSES	3. UNITS (*specify if blank*) a. CONCEN-TRATION	b. MASS	4. INTAKE (*optional*) a. LONG TERM AVERAGE VALUE (1) CONCENTRATION	(2) MASS	b. NO. OF ANALYSES
a. Biochemical Oxygen Demand (*BOD*)	<2.0	<150	--	--	--	--	1	PPM	LB/DAY	--	--	--
b. Chemical Oxygen Demand (*COD*) **	10.39	761	--	--	--	--	1	PPM	LB/DAY	--	--	--
c. Total Organic Carbon (*TOC*) **	5.7	420	--	--	--	--	1	PPM	LB/DAY	--	--	--
d. Total Suspended Solids (*TSS*)	<0.10	<1500	--	--	--	--	1	PPM	LB/DAY	--	--	--
e. Ammonia (*as N*)	<0.10	<7.4	--	--	--	--	1	PPM	LB/DAY	--	--	--
f. Flow ***	VALUE 8.77		VALUE 7.43		VALUE 3.57		35	MGD	--	VALUE --		--
g. Temperature (*winter*)**	VALUE 13.7		VALUE --		VALUE --		1	°C		VALUE --		--
h. Temperature (*summer*)	VALUE 31.8		VALUE --		VALUE --		1	°C		VALUE --		--
i. pH	MINIMUM 7.38	MAXIMUM 8.96	MINIMUM --	MAXIMUM --			172	STANDARD UNITS				

PART B – Mark "X" in column 2-a for each pollutant you know or have reason to believe is present. Mark "X" in column 2-b for each pollutant you believe to be absent. If you mark column 2a for any pollutant which is limited either directly, or indirectly but expressly, in an effluent limitations guideline, you must provide the results of at least one analysis for that pollutant. For other pollutants for which you mark column 2a, you must provide quantitative data or an explanation of their presence in your discharge. Complete one table for each outfall. See the instructions for additional details and requirements.

1. POLLUTANT AND CAS NO. (*if available*)	2. MARK "X" a. BELIEVED PRESENT	b. BELIEVED ABSENT	3. EFFLUENT a. MAXIMUM DAILY VALUE (1) CONCENTRATION	(2) MASS	b. MAXIMUM 30 DAY VALUE (*if available*) (1) CONCENTRATION	(2) MASS	c. LONG TERM AVRG. VALUE (*if available*) (1) CONCENTRATION	(2) MASS	d. NO. OF ANALYSES	4. UNITS a. CONCEN-TRATION	b. MASS	5. INTAKE (*optional*) a. LONG TERM AVERAGE VALUE (1) CONCENTRATION	(2) MASS	b. NO. OF ANALYSES
a. Bromide ** (24959-67-9)	X		5.1	380	--	--	--	--	1	PPM	LB/DA	--	--	--
b. Chlorine, Total Residual	X		<0.1	<10	--	--	--	--	1	PPM	LB/DA	--	--	--
c. Color **	X		13	--	--	--	--	--	1	PCU	--	--	--	--
d. Fecal Coliform		X	No Sample	--	--	--	--	--	0	COL/0.1L	--	--	--	--
e. Fluoride (16984-48-8)	X		<0.4	<30	--	--	--	--	1	PPM	LB/DA	--	--	--
f. Nitrate-Nitrite (*as N*)	X		<1.35	<98.9	--	--	--	--	1	PPM	LB/DA	--	--	--

* Values are based on weighted average of the 2015 measured data for Pond D Comingled Water and Outfall 502 and data in the 2013 VPDES Permit Reissuance Application for Outfall 004(or as otherwise indicated).

** Values are based on Outfall 004 data in 2013 VPDES Permit Reissuance Application.

*** Values are based on sum of Outfalls 004, 005 and 502 data in 2013 VPDES Permit Reissuance Application.

00022247

ALTERNATE Interim Configuration:
Pond D Comingled Waters*

ITEM V-B CONTINUED FROM FRONT

1. POLLUTANT AND CAS NO. (if available)	2. MARK "X"		3. EFFLUENT							4. UNITS		5. INTAKE (optional)		
	a. BELIEVED PRESENT	b. BELIEVED ABSENT	a. MAXIMUM DAILY VALUE		b. MAXIMUM 30 DAY VALUE (if available)		c. LONG TERM AVRG. VALUE (if available)		d. NO. OF ANALYSES	a. CONCEN-TRATION	b. MASS	a. LONG TERM AVERAGE VALUE		b. NO. OF ANALYSES
			(1) CONCENTRATION	(2) MASS	(1) CONCENTRATION	(2) MASS	(1) CONCENTRATION	(2) MASS				(1) CONCENTRATION	(2) MASS	
g. Nitrogen, Total Organic (as N) **	X		0.18	14	0.18	12	0.064	1.91	11	PPM	LB/DA	--	--	--
h. Oil and Grease	X		<4	<300	--	--	--	--	1	PPM	LB/DA	--	--	--
i. Phosphorus (as P), Total (7723-14-0)	X		<0.2	<20	--	--	--	--	1	PPM	LB/DA	--	--	--
j. Radioactivity														
(1) Alpha, Total **		X	<0.734	--	--	--	--	--	1	pCi/L	--	--	--	--
(2) Beta, Total **		X	<2.9	--	--	--	--	--	1	pCi/L	--	--	--	--
(3) Radium, Total **		X	No Sample	--	--	--	--	--	0	pCi/L	--	--	--	--
(4) Radium 226, Total **		X	No Sample	--	--	--	--	--	0	pCi/L	--	--	--	--
k. Sulfate (as SO_4) (14808-79-8)	X		73.0	5350	--	--	--	--	1	PPM	LB/DA	--	--	--
l. Sulfide (as S)	X		<0.24	<18	--	--	--	--	1	PPM	LB/DA	--	--	--
m. Sulfite (as SO_3) (14265-45-3)		X	No Sample	--	--	--	--	--	0	PPM	LB/DA	--	--	--
n. Surfactants **	X		<0.01	<0.74	--	--	--	--	1	PPM	LB/DA	--	--	--
o. Aluminum, Total (7429-90-5)	X		<0.10	<7.4	--	--	--	--	1	PPM	LB/DA	--	--	--
p. Barium, Total (7440-39-3)	X		0.1	8	--	--	--	--	1	PPM	LB/DA	--	--	--
q. Boron, Total (7440-42-8)	X		<0.25	<19	--	--	--	--	1	PPM	LB/DA	--	--	--
r. Cobalt, Total (7440-48-4)	X		<0.0008	<0.059	--	--	--	--	1	PPM	LB/DA	--	--	--
s. Iron, Total (7439-89-6)	X		3.0	220	--	--	--	--	1	PPM	LB/DA	--	--	--
t. Magnesium, Total (7439-95-4)	X		12	880	--	--	--	--	1	PPM	LB/DA	--	--	--
u. Molybdenum, Total (7439-98-7)	X		0.03	2.2	--	--	--	--	1	PPM	LB/DA	--	--	--
v. Manganese, Total (7439-96-5)	X		0.06	4.4	--	--	--	--	1	PPM	LB/DA	--	--	--
w. Tin, Total (7440-31-5) **	X		<0.005	<0.366	--	--	--	--	1	PPM	LB/DA	--	--	--
x. Titanium, Total (7440-32-6) **	X		<0.002	<0.147	--	--	--	--	1	PPM	LB/DA	--	--	--

 CONTINUE ON PAGE V-3

* Values are based on weighted average of the 2015 measured data for Pond D Comingled Water and Outfall 502 and data in the 2013 VPDES Permit Reissuance Application for Outfall 004 (or as otherwise indicated).

** Values are based on Outfall 004 data in 2013 VPDES Permit Reissuance Application.

00022248

EPA I.D. NUMBER (*copy from Item 1 of Form 1*)	OUTFALL NUMBER
110000340774	004

ALTERNATE Interim Configuration: Pond D Comingled Waters*

CONTINUED FROM PAGE 3 OF FORM 2-C

PART C - If you are a primary industry and this outfall contains process wastewater, refer to Table 2c-2 in the instructions to determine which of the GC/MS fractions you must test for. Mark "X" in column 2-a for all such GC/MS fractions that apply to your industry and for ALL toxic metals, cyanides, and total phenols. If you are not required to mark column 2-a (*secondary industries, nonprocess wastewater outfalls, and nonrequired GC/MS fractions*), mark "X" in column 2-b for each pollutant you know or have reason to believe is present. Mark "X" in column 2-c for each pollutant you believe is absent. If you mark column 2a for any pollutant, you must provide the results of at least one analysis for that pollutant. If you mark column 2b for any pollutant, you must provide the results of at least one analysis for that pollutant if you know or have reason to believe it will be discharged in concentrations of 10 ppb or greater. If you mark column 2b for acrolein, acrylonitrile, 2,4 dinitrophenol, or 2-methyl-4, 6 dinitrophenol, you must provide the results of at least one analysis for each of these pollutants which you know or have reason to believe that you discharge in concentrations of 100 ppb or greater. Otherwise, for pollutants for which you mark column 2b, you must either submit at least one analysis or briefly describe the reasons the pollutant is expected to be discharged. Note that there are 7 pages to this part; please review each carefully. Complete one table (*all 7 pages*) for each outfall. See instructions for additional details and requirements.

1. POLLUTANT AND CAS NUMBER (*if available*)	2. MARK "X"			3. EFFLUENT							4. UNITS		5. INTAKE (*optional*)		
	a. TESTING REQUIRED	b. BELIEVED PRESENT	c. BELIEVED ABSENT	a. MAXIMUM DAILY VALUE (1) CONCENTRATION	a. MAXIMUM DAILY VALUE (2) MASS	b. MAXIMUM 30 DAY VALUE (*if available*) (1) CONCENTRATION	b. MAXIMUM 30 DAY VALUE (*if available*) (2) MASS	c. LONG TERM AVRG. VALUE (*if available*) (1) CONCENTRATION	c. LONG TERM AVRG. VALUE (*if available*) (2) MASS	d. NO. OF ANALYSES	a. CONCEN-TRATION	b. MASS	a. LONG TERM AVERAGE VALUE (1) CONCENTRATION	a. LONG TERM AVERAGE VALUE (2) MASS	b. NO. OF ANALYSES
METALS, CYANIDE, AND TOTAL PHENOLS															
1M. Antimony, Total (7440-36-0)	X	X		<0.003	<0.220	--	--	--	--	1	PPM	LB/DAY	--	--	--
2M. Arsenic, Total (7440-38-2)	X	X		<0.011	<0.806	--	--	--	--	1	PPM	LB/DAY	--	--	--
3M. Beryllium, Total (7440-41-7)	X	X		<0.0002	<0.015	--	--	--	--	1	PPM	LB/DAY	--	--	--
4M Cadmium, Total (7440-43-9)	X	X		<0.0003	<0.022	--	--	--	--	1	PPM	LB/DAY	--	--	--
5M. Chromium, Total (7440-47-3)	X	X		<0.001	<0.074	--	--	--	--	1	PPM	LB/DAY	--	--	--
6M. Copper, Total (7440-50-8)	X	X		<0.005	<0.366	--	--	--	--	1	PPM	LB/DAY	--	--	--
7M. Lead, Total (7439-92-1)	X	X		<0.001	<0.074	--	--	--	--	1	PPM	LB/DAY	--	--	--
8M. Mercury, Total (7439-97-6)	X	X		<0.0002	<0.015	--	--	--	--	1	PPM	LB/DAY	--	--	--
9M. Nickel, Total (7440-02-0)	X	X		<0.007	<0.513	--	--	--	--	1	PPM	LB/DAY	--	--	--
10M. Selenium, Total (7782-49-2)	X	X		<0.005	<0.366	--	--	--	--	1	PPM	LB/DAY	--	--	--
11M. Silver, Total (7440-22-4)	X	X		<0.0003	<0.022	--	--	--	--	1	PPM	LB/DAY	--	--	--
12M. Thallium, Total (7440-28-0)	X	X		<0.0004	<0.030	--	--	--	--	1	PPM	LB/DAY	--	--	--
13M. Zinc, Total (7440-66-6)	X	X		<0.02	<1.5	--	--	--	--	1	PPM	LB/DAY	--	--	--
14M. Cyanide, Total (57-12-5)	X	X		<0.01	<0.8	--	--	--	--	1	PPM	LB/DAY	--	--	--
15M. Phenols, Total **	X	X		0.01	0.74	--	--	--	--	1	PPM	LB/DAY	--	--	--
DIOXIN															
2,3,7,8-Tetra-chlorodibenzo-P-Dioxin (1764-01-6)			X	DESCRIBE RESULTS No Sample											

* Values are based on weighted average of the 2015 measured data for Pond D Comingled Water and Outfall 502 and data in the 2013 VPDES Permit Reissuance Application for Outfall 004(or as otherwise indicated).
** Values are based on Outfall 004 data in 2013 VPDES Permit Reissuance Application.

00022249

ALTERNATE Interim Configuration:
Pond D Comingled Waters*

CONTINUED FROM THE FRONT

1. POLLUTANT AND CAS NUMBER (*if available*)	2. MARK "X"			3. EFFLUENT							4. UNITS		5. INTAKE (*optional*)		
	a. TESTING REQUIRED	b. BELIEVED PRESENT	c. BELIEVED ABSENT	a. MAXIMUM DAILY VALUE		b. MAXIMUM 30 DAY VALUE (*if available*)		c. LONG TERM AVRG. VALUE (*if available*)		d. NO. OF ANALYSES	a. CONCEN-TRATION	b. MASS	a. LONG TERM AVERAGE VALUE		b. NO. OF ANALYSES
				(1) CONCENTRATION	(2) MASS	(1) CONCENTRATION	(2) MASS	(1) CONCENTRATION	(2) MASS				(1) CONCENTRATION	(2) MASS	
GC/MS FRACTION – VOLATILE COMPOUNDS															
1V. Acrolein (107-02-8)	X	X		<5.5	<0.41	--	--	--	--	1	PPB	LB/DAY	--	--	--
2V. Acrylonitrile (107-13-1)	X	X		<1.2	<0.09	--	--	--	--	1	PPB	LB/DAY	--	--	--
3V. Benzene (71-43-2)	X	X		<1.9	<0.14	--	--	--	--	1	PPB	LB/DAY	--	--	--
4V. Bis (*Chloro-methyl*) Ether (542-88-1)				*DELISTED 02-4-1981* ANALYSIS NOT REQUIRED FOR THIS PARAMETER											
5V. Bromoform (75-25-2)	X	X		<2.1	<0.16	--	--	--	--	1	PPB	LB/DAY	--	--	--
6V. Carbon Tetrachloride (56-23-5)	X	X		<1.3	<0.10	--	--	--	--	1	PPB	LB/DAY	--	--	--
7V. Chlorobenzene (108-90-7)	X	X		<3	<0.3	--	--	--	--	1	PPB	LB/DAY	--	--	--
8V. Chlorodi-bromomethane (124-48-1)	X	X		<1.4	<0.11	--	--	--	--	1	PPB	LB/DAY	--	--	--
9V. Chloroethane (75-00-3)**	X	X		<1.1	<0.09	--	--	--	--	1	PPB	LB/DAY	--	--	--
10V. 2-Chloro-ethylvinyl Ether (110-75-8)**	X	X		<1.2	<0.09	--	--	--	--	1	PPB	LB/DAY	--	--	--
11V. Chloroform (67-66-3)	X	X		<7.2	<0.53	--	--	--	--	1	PPB	LB/DAY	--	--	--
12V. Dichloro-bromomethane (75-27-4)	X	X		<0.98	<0.08	--	--	--	--	1	PPB	LB/DAY	--	--	--
13V. Dichloro-difluoromethane (75-71-8)				*DELISTED 01-8-1981* ANALYSIS NOT REQUIRED FOR THIS PARAMETER											
14V. 1,1-Dichloro-ethane (75-34-3)**	X	X		<4.7	<0.35	--	--	--	--	1	PPB	LB/DAY	--	--	--
15V. 1,2-Dichloro-ethane (107-06-2)	X	X		<1.3	<0.10	--	--	--	--	1	PPB	LB/DAY	--	--	--
16V. 1,1-Dichloro-ethylene (75-35-4)	X	X		<1.3	<0.10	--	--	--	--	1	PPB	LB/DAY	--	--	--
17V. 1,2-Dichloro-propane (78-87-5)	X	X		<3	<0.3	--	--	--	--	1	PPB	LB/DAY	--	--	--
18V. 1,3-Dichloro-propylene (542-75-6)	X	X		<2.5	<0.19	--	--	--	--	1	PPB	LB/DAY	--	--	--
19V. Ethylbenzene (100-41-4)	X	X		<3.0	<0.22	--	--	--	--	1	PPB	LB/DAY	--	--	--
20V. Methyl Bromide (74-83-9)	X	X		<0.75	<0.06	--	--	--	--	1	PPB	LB/DAY	--	--	--
21V. Methyl** Chloride (74-87-3)	X	X		<1.1	<0.09	--	--	--	--	1	PPB	LB/DAY	--	--	--

 CONTINUE ON PAGE V-5

* Values are based on weighted average of the 2015 measured data for Pond D Comingled Water and Outfall 502 and data in the 2013 VPDES Permit Reissuance Application for Outfall 004 (or as otherwise indicated).
** Values are based on Outfall 004 data in 2013 VPDES Permit Reissuance Application.

00022250

ALTERNATE Interim Configuration:
Pond D Comingled Waters*

CONTINUED FROM PAGE V-4

1. POLLUTANT AND CAS NUMBER (if available)	2. MARK "X"			3. EFFLUENT							4. UNITS		5. INTAKE (optional)		
	a. TESTING REQUIRED	b. BELIEVED PRESENT	c. BELIEVED ABSENT	a. MAXIMUM DAILY VALUE		b. MAXIMUM 30 DAY VALUE (if available)		c. LONG TERM AVRG. VALUE (if available)		d. NO. OF ANALYSES	a. CONCEN-TRATION	b. MASS	a. LONG TERM AVERAGE VALUE		b. NO. OF ANALYSES
				(1) CONCENTRATION	(2) MASS	(1) CONCENTRATION	(2) MASS	(1) CONCENTRATION	(2) MASS				(1) CONCENTRATION	(2) MASS	
GC/MS FRACTION – VOLATILE COMPOUNDS (continued)															
22V. Methylene Chloride (75-09-2)	X	X		<1.4	<0.11	--	--	--	--	1	PPB	LB/DAY	--	--	--
23V. 1,1,2,2-Tetrachloroethane (79-34-5)	X	X		<2.9	<0.22	--	--	--	--	1	PPB	LB/DAY	--	--	--
24V. Tetrachloro-ethylene (127-18-4)	X	X		<1.8	<0.14	--	--	--	--	1	PPB	LB/DAY	--	--	--
25V. Toluene (108-88-3)	X	X		<3	<0.3	--	--	--	--	1	PPB	LB/DAY	--	--	--
26V. 1,2-Trans-Dichloroethylene (156-60-5)	X	X		<0.72	<0.06	--	--	--	--	1	PPB	LB/DAY	--	--	--
27V. 1,1,1-Trichloro-ethane (71-55-6)**	X	X		<3.8	<0.28	--	--	--	--	1	PPB	LB/DAY	--	--	--
28V. 1,1,2-Trichloro-ethane (79-00-5)	X	X		<3	<0.3	--	--	--	--	1	PPB	LB/DAY	--	--	--
29V Trichloro-ethylene (79-01-6)	X	X		<0.92	<0.07	--	--	--	--	1	PPB	LB/DAY	--	--	--
30V. Trichloro-fluoromethane (75-69-4)				*DELISTED 01-8-1981*	ANALYSIS NOT REQUIRED FOR THIS PARAMETER										
31V. Vinyl Chloride (75-01-4)	X	X		<0.88	<0.07	--	--	--	--	1	PPB	LB/DAY	--	--	--
GC/MS FRACTION – ACID COMPOUNDS															
1A. 2-Chlorophenol (95-57-8)	X	X		<3	<0.3	--	--	--	--	1	PPB	LB/DAY	--	--	--
2A. 2,4-Dichloro-phenol (120-83-2)	X	X		<3	<0.3	--	--	--	--	1	PPB	LB/DAY	--	--	--
3A. 2,4-Dimethyl-phenol (105-67-9)	X	X		<4	<0.3	--	--	--	--	1	PPB	LB/DAY	--	--	--
4A. 4,6-Dinitro-O-Cresol (534-52-1)	X	X		<21	<1.6	--	--	--	--	1	PPB	LB/DAY	--	--	--
5A. 2,4-Dinitro-phenol (51-28-5)	X	X		<4	<0.3	--	--	--	--	1	PPB	LB/DAY	--	--	--
6A. 2-Nitrophenol (88-75-5)**	X	X		<5	<0.4	--	--	--	--	1	PPB	LB/DAY	--	--	--
7A. 4-Nitrophenol (100-02-7)**	X	X		<5	<0.4	--	--	--	--	1	PPB	LB/DAY	--	--	--
8A. P-Chloro-M-Cresol (59-50-7)**	X	X		<5	<0.4	--	--	--	--	1	PPB	LB/DAY	--	--	--
9A. Pentachloro-phenol (87-86-5)	X	X		<4	<0.3	--	--	--	--	1	PPB	LB/DAY	--	--	--
10A. Phenol (108-95-2)	X	X		<3	<0.3	--	--	--	--	1	PPB	LB/DAY	--	--	--
11A. 2,4,6-Trichloro-phenol (88-05-2)	X	X		<3	<0.3	--	--	--	--	1	PPB	LB/DAY	--	--	--

CONTINUE ON REVERSE

* Values are based on weighted average of the 2015 measured data for Pond D Comingled Water and Outfall 502 and data in the 2013 VPDES Permit Reissuance Application for Outfall 004 (or as otherwise indicated).
** Values are based on Outfall 004 data in 2013 VPDES Permit Reissuance Application.

00022251

ALTERNATE Interim Configuration:
Pond D Comingled Waters*

CONTINUED FROM THE FRONT

1. POLLUTANT AND CAS NUMBER (if available)	2. MARK "X"			3. EFFLUENT							4. UNITS		5. INTAKE (optional)		
	a. TESTING REQUIRED	b. BELIEVED PRESENT	c. BELIEVED ABSENT	a. MAXIMUM DAILY VALUE		b. MAXIMUM 30 DAY VALUE (if available)		c. LONG TERM AVRG. VALUE (if available)		d. NO. OF ANALYSES	a. CONCEN-TRATION	b. MASS	a. LONG TERM AVERAGE VALUE		b. NO. OF ANALYSES
				(1) CONCENTRATION	(2) MASS	(1) CONCENTRATION	(2) MASS	(1) CONCENTRATION	(2) MASS				(1) CONCENTRATION	(2) MASS	
GC/MS FRACTION – BASE/NEUTRAL COMPOUNDS															
1B. Acenaphthene (83-32-9)	X	X		<3	<0.3	--	--	--	--	1	PPB	LB/DAY	--	--	--
2B. Acenaphtylene (208-96-8) **	X	X		<5	<0.4	--	--	--	--	1	PPB	LB/DAY	--	--	--
3B. Anthracene (120-12-7)	X	X		<3	<0.3	--	--	--	--	1	PPB	LB/DAY	--	--	--
4B. Benzidine (92-87-5)	X	X		<20	<1.5	--	--	--	--	1	PPB	LB/DAY	--	--	--
5B. Benzo (a) Anthracene (56-55-3)	X	X		<3	<0.3	--	--	--	--	1	PPB	LB/DAY	--	--	--
6B. Benzo (a) Pyrene (50-32-8)	X	X		<3	<0.3	--	--	--	--	1	PPB	LB/DAY	--	--	--
7B. 3,4-Benzo-fluoranthene (205-99-2)	X	X		<3	<0.3	--	--	--	--	1	PPB	LB/DAY	--	--	--
8B. Benzo (ghi) ** Perylene (191-24-2)	X	X		<5	<0.4	--	--	--	--	1	PPB	LB/DAY	--	--	--
9B Benzo (k) Fluoranthene (207-08-9)	X	X		<3	<0.3	--	--	--	--	1	PPB	LB/DAY	--	--	--
10B. Bis (2-Chloro-ethoxy) Methane (111-91-1) **	X	X		<5	<0.4	--	--	--	--	1	PPB	LB/DAY	--	--	--
11B. Bis (2-Chloro-ethyl) Ether (111-44-4)	X	X		<3	<0.3	--	--	--	--	1	PPB	LB/DAY	--	--	--
12B. Bis (2-Chloroisopropyl) Ether (102-80-1)	X	X		<3	<0.3	--	--	--	--	1	PPB	LB/DAY	--	--	--
13B. Bis (2-Ethyl-hexyl) Phthalate (117-81-7)	X	X		<3	<0.3	--	--	--	--	1	PPB	LB/DAY	--	--	--
14B. 4-Bromophenyl Phenyl Ether (101-55-3) **	X	X		<5	<0.4	--	--	--	--	1	PPB	LB/DAY	--	--	--
15B. Butyl Benzyl Phthalate (85-68-7)	X	X		<3	<0.3	--	--	--	--	1	PPB	LB/DAY	--	--	--
16B. 2-Chloro-naphthalene (91-58-7)	X	X		<3	<0.3	--	--	--	--	1	PPB	LB/DAY	--	--	--
17B. 4-Chloro-phenyl Phenyl Ether (7005-72-3) **	X	X		<5	<0.4	--	--	--	--	1	PPB	LB/DAY	--	--	--
18B. Chrysene (218-01-9)	X	X		<3	<0.3	--	--	--	--	1	PPB	LB/DAY	--	--	--
19B. Dibenzo (a,h) Anthracene (53-70-3)	X	X		<3	<0.3	--	--	--	--	1	PPB	LB/DAY	--	--	--
20B. 1,2-Dichloro-benzene (95-50-1)	X	X		<3	<0.3	--	--	--	--	1	PPB	LB/DAY	--	--	--
21B. 1,3-Di-chloro-benzene (541-73-1)	X	X		<3	<0.3	--	--	--	--	1	PPB	LB/DAY	--	--	--

 CONTINUE ON PAGE V-7

* Values are based on weighted average of the 2015 measured data for Pond D Comingled Water and Outfall 502 and data in the 2013 VPDES Permit Reissuance Application for Outfall 004(or as otherwise indicated).
** Values are based on Outfall 004 data in 2013 VPDES Permit Reissuance Application.

00022252

ALTERNATE Interim Configuration:
Pond D Comingled Waters*

CONTINUED FROM PAGE V-6

1. POLLUTANT AND CAS NUMBER (if available)	2. MARK "X"			3. EFFLUENT							4. UNITS		5. INTAKE (optional)		
	a. TESTING REQUIRED	b. BELIEVED PRESENT	c. BELIEVED ABSENT	a. MAXIMUM DAILY VALUE		b. MAXIMUM 30 DAY VALUE (if available)		c. LONG TERM AVRG. VALUE (if available)		d. NO. OF ANALYSES	a. CONCEN-TRATION	b. MASS	a. LONG TERM AVERAGE VALUE		b. NO. OF ANALYSES
				(1) CONCENTRATION	(2) MASS	(1) CONCENTRATION	(2) MASS	(1) CONCENTRATION	(2) MASS				(1) CONCENTRATION	(2) MASS	
GC/MS FRACTION – BASE/NEUTRAL COMPOUNDS (continued)															
22B. 1,4-Dichloro-benzene (106-46-7)	X	X		<3	<0.3	--	--	--	--	1	PPB	LB/DAY	--	--	--
23B. 3,3-Dichloro-benzidine (91-94-1)	X	X		<4	<0.3	--	--	--	--	1	PPB	LB/DAY	--	--	--
24B. Diethyl Phthalate (84-66-2)	X	X		<3	<0.3	--	--	--	--	1	PPB	LB/DAY	--	--	--
25B. Dimethyl Phthalate (131-11-3)	X	X		<3	<0.3	--	--	--	--	1	PPB	LB/DAY	--	--	--
26B. Di-N-Butyl Phthalate (84-74-2)	X	X		<3	<0.3	--	--	--	--	1	PPB	LB/DAY	--	--	--
27B. 2,4-Dinitro-toluene (121-14-2)	X	X		<3	<0.3	--	--	--	--	1	PPB	LB/DAY	--	--	--
28B. 2,6-Dinitro-** toluene (606-20-2)	X	X		<5	<0.4	--	--	--	--	1	PPB	LB/DAY	--	--	--
29B. Di-N-Octyl ** Phthalate (117-84-0)	X	X		<5	<0.4	--	--	--	--	1	PPB	LB/DAY	--	--	--
30B. 1,2-Diphenyl-hydrazine (as Azo-benzene) (122-66-7)	X	X		<0.3	<0.03	--	--	--	--	1	PPB	LB/DAY	--	--	--
31B. Fluoranthene (206-44-0)	X	X		<3	<0.3	--	--	--	--	1	PPB	LB/DAY	--	--	--
32B. Fluorene (86-73-7)	X	X		<3	<0.3	--	--	--	--	1	PPB	LB/DAY	--	--	--
33B. Hexachloro-benzene (118-74-1)	X	X		<3	<0.3	--	--	--	--	1	PPB	LB/DAY	--	--	--
34B. Hexachloro-butadiene (87-68-3)	X	X		<3	<0.3	--	--	--	--	1	PPB	LB/DAY	--	--	--
35B. Hexachloro-cyclopentadiene (77-47-4)	X	X		<4	<0.4	--	--	--	--	1	PPB	LB/DAY	--	--	--
36B Hexachloro-ethane (67-72-1)	X	X		<3	<0.3	--	--	--	--	1	PPB	LB/DAY	--	--	--
37B. Indeno (1,2,3-cd) Pyrene (193-39-5)	X	X		<3	<0.3	--	--	--	--	1	PPB	LB/DAY	--	--	--
38B. Isophorone (78-59-1)	X	X		<3	<0.3	--	--	--	--	1	PPB	LB/DAY	--	--	--
39B. Naphthalene (91-20-3) **	X	X		<5	<0.4	--	--	--	--	1	PPB	LB/DAY	--	--	--
40B. Nitrobenzene (98-95-3)	X	X		<3	<0.3	--	--	--	--	1	PPB	LB/DAY	--	--	--
41B. N-Nitro-sodimethylamine (62-75-9)	X	X		<3	<0.3	--	--	--	--	1	PPB	LB/DAY	--	--	--
42B. N-Nitrosodi-N-Propylamine (621-64-7)	X	X		<3	<0.3	--	--	--	--	1	PPB	LB/DAY	--	--	--

CONTINUE ON REVERSE

* Values are based on weighted average of the 2015 measured data for Pond D Comingled Water and Outfall 502 and data in the 2013 VPDES Permit Reissuance Application for Outfall 004 (or as otherwise indicated).
** Values are based on Outfall 004 data in 2013 VPDES Permit Reissuance Application.

00022253

ALTERNATE Interim Configuration:
Pond D Comingled Waters*

CONTINUED FROM THE FRONT

1. POLLUTANT AND CAS NUMBER (if available)	2. MARK "X"			3. EFFLUENT							4. UNITS		5. INTAKE (optional)		
	a. TESTING REQUIRED	b. BELIEVED PRESENT	c. BELIEVED ABSENT	a. MAXIMUM DAILY VALUE		b. MAXIMUM 30 DAY VALUE (if available)		c. LONG TERM AVRG. VALUE (if available)		d. NO. OF ANALYSES	a. CONCEN-TRATION	b. MASS	a. LONG TERM AVERAGE VALUE		b. NO. OF ANALYSES
				(1) CONCENTRATION	(2) MASS	(1) CONCENTRATION	(2) MASS	(1) CONCENTRATION	(2) MASS				(1) CONCENTRATION	(2) MASS	
GC/MS FRACTION – BASE/NEUTRAL COMPOUNDS (continued)															
43B. N-Nitro-sodiphenylamine (86-30-6)	X	X		<4	<0.3	--	--	--	--	1	PPB	LB/DAY	--	--	--
44B. Phenanthrene (85-01-8)**	X	X		<5	<0.4	--	--	--	--	1	PPB	LB/DAY	--	--	--
45B. Pyrene (129-00-0)	X	X		<3	<0.3	--	--	--	--	1	PPB	LB/DAY	--	--	--
46B. 1,2,4-Tri-chlorobenzene (120-82-1)	X	X		<3	<0.3	--	--	--	--	1	PPB	LB/DAY	--	--	--
GC/MS FRACTION – PESTICIDES															
1P. Aldrin (309-00-2)	X	X		<0.03	<0.01	--	--	--	--	1	PPB	LB/DAY	--	--	--
2P. α-BHC (319-84-6)	X	X		<0.03	<0.01	--	--	--	--	1	PPB	LB/DAY	--	--	--
3P. β-BHC (319-85-7)	X	X		<0.03	<0.01	--	--	--	--	1	PPB	LB/DAY	--	--	--
4P. γ-BHC (58-89-9)	X	X		<0.03	<0.01	--	--	--	--	1	PPB	LB/DAY	--	--	--
5P. δ-BHC (319-86-8)	X	X		<0.03	<0.01	--	--	--	--	1	PPB	LB/DAY	--	--	--
6P. Chlordane (57-74-9)	X	X		<0.2	<0.1	--	--	--	--	1	PPB	LB/DAY	--	--	--
7P. 4,4'-DDT (50-29-3)	X	X		<0.1	<0.1	--	--	--	--	1	PPB	LB/DAY	--	--	--
8P. 4,4'-DDE (72-55-9)	X	X		<0.1	<0.1	--	--	--	--	1	PPB	LB/DAY	--	--	--
9P. 4,4'-DDD (72-54-8)	X	X		<0.1	<0.1	--	--	--	--	1	PPB	LB/DAY	--	--	--
10P. Dieldrin (60-57-1)	X	X		<0.1	<0.1	--	--	--	--	1	PPB	LB/DAY	--	--	--
11P. α-Enosulfan (115-29-7)	X	X		<0.1	<0.1	--	--	--	--	1	PPB	LB/DAY	--	--	--
12P. β-Endosulfan (115-29-7)	X	X		<0.1	<0.1	--	--	--	--	1	PPB	LB/DAY	--	--	--
13P. Endosulfan Sulfate (1031-07-8)	X	X		<0.1	<0.1	--	--	--	--	1	PPB	LB/DAY	--	--	--
14P. Endrin (72-20-8)	X	X		<0.1	<0.1	--	--	--	--	1	PPB	LB/DAY	--	--	--
15P. Endrin Aldehyde (7421-93-4)	X	X		<0.1	<0.1	--	--	--	--	1	PPB	LB/DAY	--	--	--
16P. Heptachlor (76-44-8)	X	X		<0.03	<0.01	--	--	--	--	1	PPB	LB/DAY	--	--	--

 CONTINUE ON PAGE V-9

* Values are based on weighted average of the 2015 measured data for Pond D Comingled Water and Outfall 502 and data in the 2013 VPDES Permit Reissuance Application for Outfall 004 (or as otherwise indicated).
** Values are based on Outfall 004 data in 2013 VPDES Permit Reissuance Application.

00022254

EPA I.D. NUMBER (*copy from Item 1 of Form 1*)	OUTFALL NUMBER
110000340774	004

ALTERNATE Interim Configuration: Pond D Comingled Waters*

CONTINUED FROM PAGE V-8

1. POLLUTANT AND CAS NUMBER (*if available*)	2. MARK "X"			3. EFFLUENT							4. UNITS		5. INTAKE (*optional*)		
	a. TESTING REQUIRED	b. BELIEVED PRESENT	c. BELIEVED ABSENT	a. MAXIMUM DAILY VALUE		b. MAXIMUM 30 DAY VALUE (*if available*)		c. LONG TERM AVRG. VALUE (*if available*)		d. NO. OF ANALYSES	a. CONCEN-TRATION	b. MASS	a. LONG TERM AVERAGE VALUE		b. NO. OF ANALYSES
				(1) CONCENTRATION	(2) MASS	(1) CONCENTRATION	(2) MASS	(1) CONCENTRATION	(2) MASS				(1) CONCENTRATION	(2) MASS	
GC/MS FRACTION – PESTICIDES (*continued*)															
17P. Heptachlor Epoxide (1024-57-3)	X	X		<0.1	<0.1	--	--	--	--	1	PPB	LB/DAY	--	--	--
18P. PCB-1242 ** (53469-21-9)	X	X		<1	<0.1	--	--	--	--	1	PPB	LB/DAY	--	--	--
19P. PCB-1254 ** (11097-69-1)	X	X		<1	<0.1	--	--	--	--	1	PPB	LB/DAY	--	--	--
20P. PCB-1221 ** (11104-28-2)	X	X		<1	<0.1	--	--	--	--	1	PPB	LB/DAY	--	--	--
21P. PCB-1232 ** (11141-16-5)	X	X		<1	<0.1	--	--	--	--	1	PPB	LB/DAY	--	--	--
22P. PCB-1248 ** (12672-29-6)	X	X		<1	<0.1	--	--	--	--	1	PPB	LB/DAY	--	--	--
23P. PCB-1260** (11096-82-5)	X	X		<1	<0.1	--	--	--	--	1	PPB	LB/DAY	--	--	--
24P. PCB-1016 ** (12674-11-2)	X	X		<1	<0.1	--	--	--	--	1	PPB	LB/DAY	--	--	--
25P. Toxaphene (8001-35-2)	X	X		<3	<0.3	--	--	--	--	1	PPB	LB/DAY	--	--	--

* Values are based on weighted average of the 2015 measured data for Pond D Comingled Water and Outfall 502 and data in the 2013 VPDES Permit Reissuance Application for Outfall 004(or as otherwise indicated).

** Values are based on Outfall 004 data in 2013 VPDES Permit Reissuance Application.

00022255

PLEASE PRINT OR TYPE IN THE UNSHADED AREAS ONLY. You may report some or all of this information on separate sheets (*use the same format*) instead of completing these pages. SEE INSTRUCTIONS.

EPA I.D. NUMBER (*copy from Item 1 of Form 1*): 110000340774

ALTERNATE Interim Configuration: Pond D Comingled Waters*

V. INTAKE AND EFFLUENT CHARACTERISTICS *(continued from page 3 of Form 2-C)* [redacted] OUTFALL NO. 001/002

PART A –You must provide the results of at least one analysis for every pollutant in this table. Complete one table for each outfall. See instructions for additional details.

1. POLLUTANT	2. EFFLUENT a. MAXIMUM DAILY VALUE (1) CONCENTRATION	(2) MASS	b. MAXIMUM 30 DAY VALUE (*if available*) (1) CONCENTRATION	(2) MASS	c. LONG TERM AVRG. VALUE (*if available*) (1) CONCENTRATION	(2) MASS	d. NO. OF ANALYSES	3. UNITS (*specify if blank*) a. CONCEN-TRATION	b. MASS	4. INTAKE (*optional*) a. LONG TERM AVERAGE VALUE (1) CONCENTRATION	(2) MASS	b. NO. OF ANALYSES
a. Biochemical Oxygen Demand (*BOD*)	<3.0	<3200	--	--	--	--	1	PPM	LB/DAY	--	--	--
b. Chemical Oxygen Demand (*COD*) **	14.66	15440	--	--	--	--	1	PPM	LB/DAY	--	--	--
c. Total Organic Carbon (*TOC*) **	25.8	27200	--	--	--	--	1	PPM	LB/DAY	--	--	--
d. Total Suspended Solids (*TSS*)	<13	<14000	--	--	--	--	1	PPM	LB/DAY	--	--	--
e. Ammonia (*as N*)	<0.07	<74	--	--	--	--	1	PPM	LB/DAY	--	--	--
f. Flow ***	VALUE 126.2		VALUE 125.3		VALUE 87.36		36	MGD	--	VALUE --		--
g. Temperature ** (*winter*)	VALUE 15.5		VALUE --		VALUE --		1	°C		VALUE --		--
h. Temperature (*summer*)	VALUE 38.9		VALUE --		VALUE --		1	°C		VALUE --		--
i. pH **	MINIMUM 7.7	MAXIMUM 8.4	MINIMUM --	MAXIMUM --			36	STANDARD UNITS				

PART B – Mark "X" in column 2-a for each pollutant you know or have reason to believe is present. Mark "X" in column 2-b for each pollutant you believe to be absent. If you mark column 2a for any pollutant which is limited either directly, or indirectly but expressly, in an effluent limitations guideline, you must provide the results of at least one analysis for that pollutant. For other pollutants for which you mark column 2a, you must provide quantitative data or an explanation of their presence in your discharge. Complete one table for each outfall. See the instructions for additional details and requirements.

1. POLLUTANT AND CAS NO. (*if available*)	2. MARK "X" a. BELIEVED PRESENT	b. BELIEVED ABSENT	3. EFFLUENT a. MAXIMUM DAILY VALUE (1) CONCENTRATION	(2) MASS	b. MAXIMUM 30 DAY VALUE (*if available*) (1) CONCENTRATION	(2) MASS	c. LONG TERM AVRG. VALUE (*if available*) (1) CONCENTRATION	(2) MASS	d. NO. OF ANALYSES	4. UNITS a. CONCEN-TRATION	b. MASS	5. INTAKE (*optional*) a. LONG TERM AVERAGE VALUE (1) CONCENTRATION	(2) MASS	b. NO. OF ANALYSES
a. Bromide ** (24959-67-9)	X		0.28	300	--	--	--	--	1	PPM	LB/DA	--	--	--
b. Chlorine, Total Residual	X		<0.1	<200	--	--	--	--	1	PPM	LB/DA	--	--	--
c. Color **	X		20	NA	--	--	--	--	1	PCU	--	--	--	--
d. Fecal Coliform **		X	No Sample	--	--	--	--	--	0	COL/0.1L	--	--	--	--
e. Fluoride (16984-48-8)	X		0.2	300	--	--	--	--	1	PPM	LB/DA	--	--	--
f. Nitrate-Nitrite (*as N*)	X		2.41	2540	--	--	--	--	1	PPM	LB/DA	--	--	--

00022256

* Values are based on the weighted average of the 2015 measured data for Pond D Comingled Waters and data in the 2013 VPDES Permit Reissuance Application for Outfall 001/002 (or as otherwise indicated).

** Values are based on Outfall 001/002 data in 2013 VPDES Permit Reissuance Application.

*** Values are based on the sum of Outfall 001/002 and Outfall 005 flows in the 2013 VPDES Permit Reissuance Application.

ALTERNATE Interim Configuration:
Pond D Comingled Waters*

ITEM V-B CONTINUED FROM FRONT

1. POLLUTANT AND CAS NO. (if available)	2. MARK "X" a. BELIEVED PRESENT	2. MARK "X" b. BELIEVED ABSENT	3. EFFLUENT a. MAXIMUM DAILY VALUE (1) CONCENTRATION	a. MAXIMUM DAILY VALUE (2) MASS	b. MAXIMUM 30 DAY VALUE (if available) (1) CONCENTRATION	b. MAXIMUM 30 DAY VALUE (2) MASS	c. LONG TERM AVRG. VALUE (if available) (1) CONCENTRATION	c. LONG TERM AVRG. VALUE (2) MASS	d. NO. OF ANALYSES	4. UNITS a. CONCEN-TRATION	4. UNITS b. MASS	5. INTAKE (optional) a. LONG TERM AVERAGE VALUE (1) CONCENTRATION	a. LONG TERM AVERAGE VALUE (2) MASS	b. NO. OF ANALYSES
g. Nitrogen, Total Organic (as N) **	X		0.4	500	--	--	--	--	1	PPM	LB/DA	--	--	--
h. Oil and Grease	X		<5	<6000	--	--	--	--	1	PPM	LB/DA	--	--	--
i. Phosphorus (as P), Total (7723-14-0)	X		<0.32	<340	--	--	--	--	1	PPM	LB/DA	--	--	--
j. Radioactivity														
(1) Alpha, Total **		X	<0.646	--	--	--	--	--	1	pCi/L	--	--	--	--
(2) Beta, Total **		X	<2.79	--	--	--	--	--	1	pCi/L	--	--	--	--
(3) Radium, Total **		X	--	--	--	--	--	--	1	pCi/L	--	--	--	--
(4) Radium 226, Total **		X	--	--	--	--	--	--	1	pCi/L	--	--	--	--
k. Sulfate (as SO_4) (14808-79-8)	X		30.3	32000	--	--	--	--	1	PPM	LB/DA	--	--	--
l. Sulfide ** (as S)	X		<0.06	<64	--	--	--	--	1	PPM	LB/DA	--	--	--
m. Sulfite ** (as SO_3) (14265-45-3)		X	No Sample	--	--	--	--	--	0	PPM	LB/DA	--	--	--
n. Surfactants **	X		<0.01	<11	--	--	--	--	1	PPM	LB/DA	--	--	--
o. Aluminum, Total (7429-90-5)	X		<0.10	<110	--	--	--	--	1	PPM	LB/DA	--	--	--
p. Barium, Total (7440-39-3)	X		0.05	<53	--	--	--	--	1	PPM	LB/DA	--	--	--
q. Boron, Total (7440-42-8)	X		0.04	43	--	--	--	--	1	PPM	LB/DA	--	--	--
r. Cobalt, Total (7440-48-4)	X		<0.0008	<0.843	--	--	--	--	1	PPM	LB/DA	--	--	--
s. Iron, Total (7439-89-6)	X		0.41	440	--	--	--	--	1	PPM	LB/DA	--	--	--
t. Magnesium, Total (7439-95-4)	X		8.3	8800	--	--	--	--	1	PPM	LB/DA	--	--	--
u. Molybdenum, Total (7439-98-7)	X		<0.01	<11	--	--	--	--	1	PPM	LB/DA	--	--	--
v. Manganese, Total (7439-96-5)	X		0.12	130	--	--	--	--	1	PPM	LB/DA	--	--	--
w. Tin, Total ** (7440-31-5)	X		<0.005	<5.27	--	--	--	--	1	PPM	LB/DA	--	--	--
x. Titanium, ** Total (7440-32-6)	X		<0.005	<5.27	--	--	--	--	1	PPM	LB/DA	--	--	--

 CONTINUE ON PAGE V-3

* Values are based on the weighted average of the 2015 measured data for Pond D Comingled Water and data in the 2013 VPDES Permit Reissuance Application for Outfall 001/002 (or as otherwise indicated).

** Values are based on Outfall 001/002 data in 2013 VPDES Permit Reissuance Application.

00022257

EPA I.D. NUMBER (*copy from Item 1 of Form 1*)	OUTFALL NUMBER
110000340774	001/002

ALTERNATE Interim Configuration: Pond D Comingled Waters*

CONTINUED FROM PAGE 3 OF FORM 2-C

PART C - If you are a primary industry and this outfall contains process wastewater, refer to Table 2c-2 in the instructions to determine which of the GC/MS fractions you must test for. Mark "X" in column 2-a for all such GC/MS fractions that apply to your industry and for ALL toxic metals, cyanides, and total phenols. If you are not required to mark column 2-a (*secondary industries, nonprocess wastewater outfalls, and nonrequired GC/MS fractions*), mark "X" in column 2-b for each pollutant you know or have reason to believe is present. Mark "X" in column 2-c for each pollutant you believe is absent. If you mark column 2a for any pollutant, you must provide the results of at least one analysis for that pollutant. If you mark column 2b for any pollutant, you must provide the results of at least one analysis for that pollutant if you know or have reason to believe it will be discharged in concentrations of 10 ppb or greater. If you mark column 2b for acrolein, acrylonitrile, 2,4 dinitrophenol, or 2-methyl-4, 6 dinitrophenol, you must provide the results of at least one analysis for each of these pollutants which you know or have reason to believe that you discharge in concentrations of 100 ppb or greater. Otherwise, for pollutants for which you mark column 2b, you must either submit at least one analysis or briefly describe the reasons the pollutant is expected to be discharged. Note that there are 7 pages to this part; please review each carefully. Complete one table (*all 7 pages*) for each outfall. See instructions for additional details and requirements.

1. POLLUTANT AND CAS NUMBER (*if available*)	2. MARK "X"			3. EFFLUENT							4. UNITS		5. INTAKE (*optional*)		
	a. TESTING REQUIRED	b. BELIEVED PRESENT	c. BELIEVED ABSENT	a. MAXIMUM DAILY VALUE (1) CONCENTRATION	a. MAXIMUM DAILY VALUE (2) MASS	b. MAXIMUM 30 DAY VALUE (*if available*) (1) CONCENTRATION	b. MAXIMUM 30 DAY VALUE (*if available*) (2) MASS	c. LONG TERM AVRG. VALUE (*if available*) (1) CONCENTRATION	c. LONG TERM AVRG. VALUE (*if available*) (2) MASS	d. NO. OF ANALYSES	a. CONCEN-TRATION	b. MASS	a. LONG TERM AVERAGE VALUE (1) CONCENTRATION	a. LONG TERM AVERAGE VALUE (2) MASS	b. NO. OF ANALYSES
METALS, CYANIDE, AND TOTAL PHENOLS															
1M. Antimony, Total (7440-36-0)	X	X		<0.002	<2.11	--	--	--	--	1	PPM	LB/DAY	--	--	--
2M. Arsenic, Total (7440-38-2)	X	X		<0.004	<4.22	--	--	--	--	1	PPM	LB/DAY	--	--	--
3M. Beryllium, Total (7440-41-7)	X	X		<0.0002	<0.211	--	--	--	--	1	PPM	LB/DAY	--	--	--
4M. Cadmium, Total (7440-43-9)	X	X		<0.0003	<0.316	--	--	--	--	1	PPM	LB/DAY	--	--	--
5M. Chromium, Total (7440-47-3)	X	X		<0.001	<1.06	--	--	--	--	1	PPM	LB/DAY	--	--	--
6M. Copper, Total (7440-50-8)	X	X		<0.011	<11.6	--	--	--	--	1	PPM	LB/DAY	--	--	--
7M. Lead, Total (7439-92-1)	X	X		<0.001	<1.06	--	--	--	--	1	PPM	LB/DAY	--	--	--
8M. Mercury, Total (7439-97-6)	X	X		<0.0002	<0.211	--	--	--	--	1	PPM	LB/DAY	--	--	--
9M. Nickel, Total (7440-02-0)	X	X		<0.005	<5.27	--	--	--	--	1	PPM	LB/DAY	--	--	--
10M. Selenium, Total (7782-49-2)	X	X		<0.004	<4.22	--	--	--	--	1	PPM	LB/DAY	--	--	--
11M. Silver, Total (7440-22-4)	X	X		<0.0002	<0.211	--	--	--	--	1	PPM	LB/DAY	--	--	--
12M. Thallium, Total (7440-28-0)	X	X		<0.0002	<0.211	--	--	--	--	1	PPM	LB/DAY	--	--	--
13M. Zinc, Total (7440-66-6)	X	X		<0.01	<11	--	--	--	--	1	PPM	LB/DAY	--	--	--
14M. Cyanide, Total (57-12-5)	X	X		<0.01	<11	--	--	--	--	1	PPM	LB/DAY	--	--	--
15M. Phenols, Total **	X	X		<0.01	<11	--	--	--	--	1	PPM	LB/DAY	--	--	--
DIOXIN															
2,3,7,8-Tetra-chlorodibenzo-P-Dioxin (1764-01-6)			X	DESCRIBE RESULTS No Sample											

* Values are based on the weighted average of the 2015 measured data for Pond D Comingled Water and data in the 2013 VPDES Permit Reissuance Application for Outfall 001/002 (or as otherwise indicated).

** Values are based on Outfall 001/002 data in 2013 VPDES Permit Reissuance Application.

00022258

ALTERNATE Interim Configuration:
Pond D Comingled Waters*

CONTINUED FROM THE FRONT

1. POLLUTANT AND CAS NUMBER (if available)	2. MARK "X"			3. EFFLUENT							4. UNITS		5. INTAKE (optional)		
	a. TESTING REQUIRED	b. BELIEVED PRESENT	c. BELIEVED ABSENT	a. MAXIMUM DAILY VALUE		b. MAXIMUM 30 DAY VALUE (if available)		c. LONG TERM AVRG. VALUE (if available)		d. NO. OF ANALYSES	a. CONCEN-TRATION	b. MASS	a. LONG TERM AVERAGE VALUE		b. NO. OF ANALYSES
				(1) CONCENTRATION	(2) MASS	(1) CONCENTRATION	(2) MASS	(1) CONCENTRATION	(2) MASS				(1) CONCENTRATION	(2) MASS	
GC/MS FRACTION – VOLATILE COMPOUNDS															
1V. Acrolein (107-02-8)	X	X		<10	<11	--	--	--	--	1	PPB	LB/DAY	--	--	--
2V. Acrylonitrile (107-13-1)	X	X		<1.5	<1.6	--	--	--	--	1	PPB	LB/DAY	--	--	--
3V. Benzene (71-43-2)	X	X		<4.3	<4.6	--	--	--	--	1	PPB	LB/DAY	--	--	--
4V. Bis (*Chloro-methyl*) Ether (542-88-1)				*DELISTED 02-4-1981* ANALYSIS NOT REQUIRED FOR THIS PARAMETER											
5V. Bromoform (75-25-2)	X	X		<4.6	<4.9	--	--	--	--	1	PPB	LB/DAY	--	--	--
6V. Carbon Tetrachloride (56-23-5)	X	X		<2.8	<3.0	--	--	--	--	1	PPB	LB/DAY	--	--	--
7V. Chlorobenzene (108-90-7)	X	X		<6	<7	--	--	--	--	1	PPB	LB/DAY	--	--	--
8V. Chlorodi-bromomethane (124-48-1)	X	X		<3.1	<3.3	--	--	--	--	1	PPB	LB/DAY	--	--	--
9V. Chloroethane (75-00-3)**	X	X		<1.1	<1.2	--	--	--	--	1	PPB	LB/DAY	--	--	--
10V. 2-Chloro-ethylvinyl Ether** (110-75-8)	X	X		<1.2	<1.3	--	--	--	--	1	PPB	LB/DAY	--	--	--
11V. Chloroform (67-66-3)	X	X		<1.6	<1.7	--	--	--	--	1	PPB	LB/DAY	--	--	--
12V. Dichloro-bromomethane (75-27-4)	X	X		<2.2	<2.4	--	--	--	--	1	PPB	LB/DAY	--	--	--
13V. Dichloro-difluoromethane (75-71-8)				*DELISTED 01-8-1981* ANALYSIS NOT REQUIRED FOR THIS PARAMETER											
14V. 1,1-Dichloro-ethane (75-34-3)**	X	X		<4.7	<5.0	--	--	--	--	1	PPB	LB/DAY	--	--	--
15V. 1,2-Dichloro-ethane (107-06-2)	X	X		<2.8	<3.0	--	--	--	--	1	PPB	LB/DAY	--	--	--
16V. 1,1-Dichloro-ethylene (75-35-4)	X	X		<2.8	<3.0	--	--	--	--	1	PPB	LB/DAY	--	--	--
17V. 1,2-Dichloro-propane (78-87-5)	X	X		<6	<7	--	--	--	--	1	PPB	LB/DAY	--	--	--
18V. 1,3-Dichloro-propylene (542-75-6)	X	X		<5.8	<6.2	--	--	--	--	1	PPB	LB/DAY	--	--	--
19V. Ethylbenzene (100-41-4)	X	X		<7.0	<7.4	--	--	--	--	1	PPB	LB/DAY	--	--	--
20V. Methyl Bromide (74-83-9)	X	X		<1.4	<1.5	--	--	--	--	1	PPB	LB/DAY	--	--	--
21V. Methyl** Chloride (74-87-3)	X	X		<1.1	<1.2	--	--	--	--	1	PPB	LB/DAY	--	--	--

 CONTINUE ON PAGE V-5

* Values are based on the weighted average of the 2015 measured data for Pond D Comingled Water and data in the 2013 VPDES Permit Reissuance Application for Outfall 001/002 (or as otherwise indicated).

** Values are based on Outfall 001/002 data in 2013 VPDES Permit Reissuance Application.

00022259

ALTERNATE Interim Configuration:
Pond D Comingled Waters*

CONTINUED FROM PAGE V-4

1. POLLUTANT AND CAS NUMBER (*if available*)	2. MARK "X"			3. EFFLUENT							4. UNITS		5. INTAKE (*optional*)		
	a. TESTING REQUIRED	b. BELIEVED PRESENT	c. BELIEVED ABSENT	a. MAXIMUM DAILY VALUE		b. MAXIMUM 30 DAY VALUE (*if available*)		c. LONG TERM AVRG. VALUE (*if available*)		d. NO. OF ANALYSES	a. CONCEN-TRATION	b. MASS	a. LONG TERM AVERAGE VALUE		b. NO. OF ANALYSES
				(1) CONCENTRATION	(2) MASS	(1) CONCENTRATION	(2) MASS	(1) CONCENTRATION	(2) MASS				(1) CONCENTRATION	(2) MASS	
GC/MS FRACTION – VOLATILE COMPOUNDS (*continued*)															
22V. Methylene Chloride (75-09-2)	X	X		<2.8	<3.0	--	--	--	--	1	PPB	LB/DAY	--	--	--
23V. 1,1,2,2-Tetrachloroethane (79-34-5)	X	X		<6.8	<7.2	--	--	--	--	1	PPB	LB/DAY	--	--	--
24V. Tetrachloro-ethylene (127-18-4)	X	X		<4.0	<4.3	--	--	--	--	1	PPB	LB/DAY	--	--	--
25V. Toluene (108-88-3)	X	X		<6	<7	--	--	--	--	1	PPB	LB/DAY	--	--	--
26V. 1,2-Trans-Dichloroethylene (156-60-5)	X	X		<1.6	<1.7	--	--	--	--	1	PPB	LB/DAY	--	--	--
27V. 1,1,1-Trichloro-ethane (71-55-6)**	X	X		<3.8	<4.1	--	--	--	--	1	PPB	LB/DAY	--	--	--
28V. 1,1,2-Trichloro-ethane (79-00-5)	X	X		<5	<6	--	--	--	--	1	PPB	LB/DAY	--	--	--
29V Trichloro-ethylene (79-01-6)	X	X		<1.9	<2.1	--	--	--	--	1	PPB	LB/DAY	--	--	--
30V. Trichloro-fluoromethane (75-69-4)				*DELISTED 01-8-1981* ANALYSIS NOT REQUIRED FOR THIS PARAMETER											
31V. Vinyl Chloride (75-01-4)	X	X		<1.8	<1.9	--	--	--	--	1	PPB	LB/DAY	--	--	--
GC/MS FRACTION – ACID COMPOUNDS															
1A. 2-Chlorophenol (95-57-8)	X	X		<10	<11	--	--	--	--	1	PPB	LB/DAY	--	--	--
2A. 2,4-Dichloro-phenol (120-83-2)	X	X		<10	<11	--	--	--	--	1	PPB	LB/DAY	--	--	--
3A. 2,4-Dimethyl-phenol (105-67-9)	X	X		<10	<11	--	--	--	--	1	PPB	LB/DAY	--	--	--
4A. 4,6-Dinitro-O-Cresol (534-52-1)	X	X		<50	<53	--	--	--	--	1	PPB	LB/DAY	--	--	--
5A. 2,4-Dinitro-phenol (51-28-5)	X	X		<10	<11	--	--	--	--	1	PPB	LB/DAY	--	--	--
6A. 2-Nitrophenol (88-75-5)**	X	X		<10	<11	--	--	--	--	1	PPB	LB/DAY	--	--	--
7A. 4-Nitrophenol (100-02-7)**	X	X		<50	<53	--	--	--	--	1	PPB	LB/DAY	--	--	--
8A. P-Chloro-M-Cresol (59-50-7)**	X	X		<10	<11	--	--	--	--	1	PPB	LB/DAY	--	--	--
9A. Pentachloro-phenol (87-86-5)	X	X		<50	<53	--	--	--	--	1	PPB	LB/DAY	--	--	--
10A. Phenol (108-95-2)	X	X		<10	<11	--	--	--	--	1	PPB	LB/DAY	--	--	--
11A. 2,4,6-Trichloro-phenol (88-05-2)	X	X		<10	<11	--	--	--	--	1	PPB	LB/DAY	--	--	--

* Values are based on the weighted average of the 2015 measured data for Pond D Comingled Water and data in the 2013 VPDES Permit Reissuance Application for Outfall 001/002 (or as otherwise indicated).
** Values are based on Outfall 001/002 data in 2013 VPDES Permit Reissuance Application.

00022260

ALTERNATE Interim Configuration:
Pond D Comingled Waters*

CONTINUED FROM THE FRONT

1. POLLUTANT AND CAS NUMBER (*if available*)	2. MARK "X"			3. EFFLUENT							4. UNITS		5. INTAKE (*optional*)		
	a. TESTING REQUIRED	b. BELIEVED PRESENT	c. BELIEVED ABSENT	a. MAXIMUM DAILY VALUE		b. MAXIMUM 30 DAY VALUE (*if available*)		c. LONG TERM AVRG. VALUE (*if available*)		d. NO. OF ANALYSES	a. CONCEN-TRATION	b. MASS	a. LONG TERM AVERAGE VALUE		b. NO. OF ANALYSES
				(1) CONCENTRATION	(2) MASS	(1) CONCENTRATION	(2) MASS	(1) CONCENTRATION	(2) MASS				(1) CONCENTRATION	(2) MASS	
GC/MS FRACTION – BASE/NEUTRAL COMPOUNDS															
1B. Acenaphthene (83-32-9)	X	X		<10	<11	--	--	--	--	1	PPB	LB/DAY	--	--	--
2B. Acenaphtylene (208-96-8) **	X	X		<10	<11	--	--	--	--	1	PPB	LB/DAY	--	--	--
3B. Anthracene (120-12-7)	X	X		<10	<11	--	--	--	--	1	PPB	LB/DAY	--	--	--
4B. Benzidine (92-87-5)	X	X		<6.8	<7.2	--	--	--	--	1	PPB	LB/DAY	--	--	--
5B. Benzo (*a*) Anthracene (56-55-3)	X	X		<10	<11	--	--	--	--	1	PPB	LB/DAY	--	--	--
6B. Benzo (*a*) Pyrene (50-32-8)	X	X		<10	<11	--	--	--	--	1	PPB	LB/DAY	--	--	--
7B. 3,4-Benzo-fluoranthene (205-99-2)	X	X		<10	<11	--	--	--	--	1	PPB	LB/DAY	--	--	--
8B. Benzo (*ghi*) ** Perylene (191-24-2)	X	X		<10	<11	--	--	--	--	1	PPB	LB/DAY	--	--	--
9B. Benzo (*k*) Fluoranthene (207-08-9)	X	X		<10	<11	--	--	--	--	1	PPB	LB/DAY	--	--	--
10B. Bis (*2-Chloro-ethoxy*) Methane ** (111-91-1)	X	X		<10	<11	--	--	--	--	1	PPB	LB/DAY	--	--	--
11B. Bis (*2-Chloro-ethyl*) Ether (111-44-4)	X	X		<10	<11	--	--	--	--	1	PPB	LB/DAY	--	--	--
12B. Bis (*2-Chloroisopropyl*) Ether (102-80-1)	X	X		<10	<11	--	--	--	--	1	PPB	LB/DAY	--	--	--
13B. Bis (*2-Ethyl-hexyl*) Phthalate (117-81-7)	X	X		<10	<11	--	--	--	--	1	PPB	LB/DAY	--	--	--
14B. 4-Bromophenyl Phenyl Ether ** (101-55-3)	X	X		<10	<11	--	--	--	--	1	PPB	LB/DAY	--	--	--
15B. Butyl Benzyl Phthalate (85-68-7)	X	X		<10	<11	--	--	--	--	1	PPB	LB/DAY	--	--	--
16B. 2-Chloro-naphthalene (91-58-7)	X	X		<10	<11	--	--	--	--	1	PPB	LB/DAY	--	--	--
17B. 4-Chloro-phenyl Phenyl Ether (7005-72-3)**	X	X		<10	<11	--	--	--	--	1	PPB	LB/DAY	--	--	--
18B. Chrysene (218-01-9)	X	X		<10	<11	--	--	--	--	1	PPB	LB/DAY	--	--	--
19B. Dibenzo (*a,h*) Anthracene (53-70-3)	X	X		<10	<11	--	--	--	--	1	PPB	LB/DAY	--	--	--
20B. 1,2-Dichloro-benzene (95-50-1)	X	X		<5	<6	--	--	--	--	1	PPB	LB/DAY	--	--	--
21B. 1,3-Di-chloro-benzene (541-73-1)	X	X		<5	<6	--	--	--	--	1	PPB	LB/DAY	--	--	--

 CONTINUE ON PAGE V-7

* Values are based on the weighted average of the 2015 measured data for Pond D Comingled Water and data in the 2013 VPDES Permit Reissuance Application for Outfall 001/002 (or as otherwise indicated).

** Values are based on Outfall 001/002 data in 2013 VPDES Permit Reissuance Application.

00022261

ALTERNATE Interim Configuration:
Pond D Comingled Waters*

CONTINUED FROM PAGE V-6

1. POLLUTANT AND CAS NUMBER (if available)	2. MARK "X"			3. EFFLUENT							4. UNITS		5. INTAKE (optional)		
	a. TESTING REQUIRED	b. BELIEVED PRESENT	c. BELIEVED ABSENT	a. MAXIMUM DAILY VALUE		b. MAXIMUM 30 DAY VALUE (if available)		c. LONG TERM AVRG. VALUE (if available)		d. NO. OF ANALYSES	a. CONCEN-TRATION	b. MASS	a. LONG TERM AVERAGE VALUE		b. NO. OF ANALYSES
				(1) CONCENTRATION	(2) MASS	(1) CONCENTRATION	(2) MASS	(1) CONCENTRATION	(2) MASS				(1) CONCENTRATION	(2) MASS	
GC/MS FRACTION -- BASE/NEUTRAL COMPOUNDS (continued)															
22B. 1,4-Dichloro-benzene (106-46-7)	X	X		<5	<6	--	--	--	--	1	PPB	LB/DAY	--	--	--
23B. 3,3-Dichloro-benzidine (91-94-1)	X	X		<20	<22	--	--	--	--	1	PPB	LB/DAY	--	--	--
24B. Diethyl Phthalate (84-66-2)	X	X		<10	<11	--	--	--	--	1	PPB	LB/DAY	--	--	--
25B. Dimethyl Phthalate (131-11-3)	X	X		<10	<11	--	--	--	--	1	PPB	LB/DAY	--	--	--
26B. Di-N-Butyl Phthalate (84-74-2)	X	X		<10	<11	--	--	--	--	1	PPB	LB/DAY	--	--	--
27B. 2,4-Dinitro-toluene (121-14-2)	X	X		<10	<11	--	--	--	--	1	PPB	LB/DAY	--	--	--
28B. 2,6-Dinitro-** toluene (606-20-2)	X	X		<10	<11	--	--	--	--	1	PPB	LB/DAY	--	--	--
29B. Di-N-Octyl ** Phthalate (117-84-0)	X	X		<10	<11	--	--	--	--	1	PPB	LB/DAY	--	--	--
30B. 1,2-Diphenyl-hydrazine (as Azo-benzene) (122-66-7)	X	X		<100	<106	--	--	--	--	1	PPB	LB/DAY	--	--	--
31B. Fluoranthene (206-44-0)	X	X		<10	<11	--	--	--	--	1	PPB	LB/DAY	--	--	--
32B. Fluorene (86-73-7)	X	X		<10	<11	--	--	--	--	1	PPB	LB/DAY	--	--	--
33B. Hexachloro-benzene (118-74-1)	X	X		<10	<11	--	--	--	--	1	PPB	LB/DAY	--	--	--
34B. Hexachloro-butadiene (87-68-3)	X	X		<10	<11	--	--	--	--	1	PPB	LB/DAY	--	--	--
35B. Hexachloro-cyclopentadiene (77-47-4)	X	X		<10	<11	--	--	--	--	1	PPB	LB/DAY	--	--	--
36B Hexachloro-ethane (67-72-1)	X	X		<10	<11	--	--	--	--	1	PPB	LB/DAY	--	--	--
37B. Indeno (1,2,3-cd) Pyrene (193-39-5)	X	X		<10	<11	--	--	--	--	1	PPB	LB/DAY	--	--	--
38B. Isophorone (78-59-1)	X	X		<10	<11	--	--	--	--	1	PPB	LB/DAY	--	--	--
39B. Naphthalene (91-20-3)**	X	X		<10	<11	--	--	--	--	1	PPB	LB/DAY	--	--	--
40B. Nitrobenzene (98-95-3)	X	X		<10	<11	--	--	--	--	1	PPB	LB/DAY	--	--	--
41B. N-Nitro-sodimethylamine (62-75-9)	X	X		<10	<11	--	--	--	--	1	PPB	LB/DAY	--	--	--
42B. N-Nitrosodi-N-Propylamine (621-64-7)	X	X		<10	<11	--	--	--	--	1	PPB	LB/DAY	--	--	--

CONTINUE ON REVERSE

* Values are based on the weighted average of the 2015 measured data for Pond D Comingled Water and data in the 2013 VPDES Permit Reissuance Application for Outfall 001/002 (or as otherwise indicated).
** Values are based on Outfall 001/002 data in 2013 VPDES Permit Reissuance Application.

00022262

ALTERNATE Interim Configuration:
Pond D Comingled Waters*

CONTINUED FROM THE FRONT

1. POLLUTANT AND CAS NUMBER (if available)	2. MARK "X"			3. EFFLUENT							4. UNITS		5. INTAKE (optional)		
	a. TESTING REQUIRED	b. BELIEVED PRESENT	c. BELIEVED ABSENT	a. MAXIMUM DAILY VALUE		b. MAXIMUM 30 DAY VALUE (if available)		c. LONG TERM AVRG. VALUE (if available)		d. NO. OF ANALYSES	a. CONCEN-TRATION	b. MASS	a. LONG TERM AVERAGE VALUE		b. NO. OF ANALYSES
				(1) CONCENTRATION	(2) MASS	(1) CONCENTRATION	(2) MASS	(1) CONCENTRATION	(2) MASS				(1) CONCENTRATION	(2) MASS	
GC/MS FRACTION – BASE/NEUTRAL COMPOUNDS (continued)															
43B. N-Nitro-sodiphenylamine (86-30-6)	X	X		<10	<11	--	--	--	--	1	PPB	LB/DAY	--	--	--
44B. Phenanthrene (85-01-8) **	X	X		<10	<11	--	--	--	--	1	PPB	LB/DAY	--	--	--
45B. Pyrene (129-00-0)	X	X		<10	<11	--	--	--	--	1	PPB	LB/DAY	--	--	--
46B. 1,2,4-Tri-chlorobenzene (120-82-1)	X	X		<10	<11	--	--	--	--	1	PPB	LB/DAY	--	--	--
GC/MS FRACTION – PESTICIDES															
1P. Aldrin (309-00-2)	X	X		<0.05	<0.06	--	--	--	--	1	PPB	LB/DAY	--	--	--
2P. α-BHC (319-84-6)	X	X		<0.05	<0.06	--	--	--	--	1	PPB	LB/DAY	--	--	--
3P. β-BHC (319-85-7)	X	X		<0.05	<0.06	--	--	--	--	1	PPB	LB/DAY	--	--	--
4P. γ-BHC (58-89-9)	X	X		<0.05	<0.06	--	--	--	--	1	PPB	LB/DAY	--	--	--
5P. δ-BHC (319-86-8)	X	X		<0.05	<0.06	--	--	--	--	1	PPB	LB/DAY	--	--	--
6P. Chlordane (57-74-9)	X	X		<0.2	<0.3	--	--	--	--	1	PPB	LB/DAY	--	--	--
7P. 4,4'-DDT (50-29-3)	X	X		<0.1	<0.2	--	--	--	--	1	PPB	LB/DAY	--	--	--
8P. 4,4'-DDE (72-55-9)	X	X		<0.1	<0.2	--	--	--	--	1	PPB	LB/DAY	--	--	--
9P. 4,4'-DDD (72-54-8)	X	X		<0.1	<0.2	--	--	--	--	1	PPB	LB/DAY	--	--	--
10P. Dieldrin (60-57-1)	X	X		<0.1	<0.2	--	--	--	--	1	PPB	LB/DAY	--	--	--
11P. α-Enosulfan (115-29-7)	X	X		<0.1	<0.2	--	--	--	--	1	PPB	LB/DAY	--	--	--
12P. β-Endosulfan (115-29-7)	X	X		<0.1	<0.2	--	--	--	--	1	PPB	LB/DAY	--	--	--
13P. Endosulfan Sulfate (1031-07-8)	X	X		<0.1	<0.2	--	--	--	--	1	PPB	LB/DAY	--	--	--
14P. Endrin (72-20-8)	X	X		<0.1	<0.2	--	--	--	--	1	PPB	LB/DAY	--	--	--
15P. Endrin Aldehyde (7421-93-4)	X	X		<0.1	<0.2	--	--	--	--	1	PPB	LB/DAY	--	--	--
16P. Heptachlor (76-44-8)	X	X		<0.05	<0.06	--	--	--	--	1	PPB	LB/DAY	--	--	--

 CONTINUE ON PAGE V-9

* Values are based on the weighted average of the 2015 measured data for Pond D Comingled Water and data in the 2013 VPDES Permit Reissuance Application for Outfall 001/002 (or as otherwise indicated).
** Values are based on Outfall 001/002 data in 2013 VPDES Permit Reissuance Application.

00022263

EPA I.D. NUMBER (*copy from Item 1 of Form 1*)	OUTFALL NUMBER
110000340774	001/002

ALTERNATE Interim Configuration: Pond D Comingled Waters*

CONTINUED FROM PAGE V-8

1. POLLUTANT AND CAS NUMBER (*if available*)	2. MARK "X"			3. EFFLUENT							4. UNITS		5. INTAKE (*optional*)		
	a. TESTING REQUIRED	b. BELIEVED PRESENT	c. BELIEVED ABSENT	a. MAXIMUM DAILY VALUE		b. MAXIMUM 30 DAY VALUE (*if available*)		c. LONG TERM AVRG. VALUE (*if available*)		d. NO. OF ANALYSES	a. CONCEN-TRATION	b. MASS	a. LONG TERM AVERAGE VALUE		b. NO. OF ANALYSES
				(1) CONCENTRATION	(2) MASS	(1) CONCENTRATION	(2) MASS	(1) CONCENTRATION	(2) MASS				(1) CONCENTRATION	(2) MASS	
GC/MS FRACTION – PESTICIDES (*continued*)															
17P. Heptachlor Epoxide (1024-57-3)	X	X		<0.1	<0.2	--	--	--	--	1	PPB	LB/DAY	--	--	--
18P. PCB-1242** (53469-21-9)	X	X		<1	<2	--	--	--	--	1	PPB	LB/DAY	--	--	--
19P. PCB-1254** (11097-69-1)	X	X		<1	<2	--	--	--	--	1	PPB	LB/DAY	--	--	--
20P. PCB-1221** (11104-28-2)	X	X		<1	<2	--	--	--	--	1	PPB	LB/DAY	--	--	--
21P. PCB-1232** (11141-16-5)	X	X		<1	<2	--	--	--	--	1	PPB	LB/DAY	--	--	--
22P. PCB-1248** (12672-29-6)	X	X		<1	<2	--	--	--	--	1	PPB	LB/DAY	--	--	--
23P. PCB-1260** (11096-82-5)	X	X		<1	<2	--	--	--	--	1	PPB	LB/DAY	--	--	--
24P. PCB-1016** (12674-11-2)	X	X		<1	<2	--	--	--	--	1	PPB	LB/DAY	--	--	--
25P. Toxaphene (8001-35-2)	X	X		<5	<6	--	--	--	--	1	PPB	LB/DAY	--	--	--

* Values are based on the weighted average of the 2015 measured data for Pond D Comingled Water and data in the 2013 VPDES Permit Reissuance Application for Outfall 001/002 (or as otherwise indicated).

** Values are based on Outfall 001/002 data in 2013 VPDES Permit Reissuance Application.

00022264

PLEASE PRINT OR TYPE IN THE UNSHADED AREAS ONLY. You may report some or all of this information on separate sheets (*use the same format*) instead of completing these pages. SEE INSTRUCTIONS.

EPA I.D. NUMBER (*copy from Item 1 of Form 1*): 110000340774

ALTERNATE Interim Configuration: Dewatering and Contact Waters*

V. INTAKE AND EFFLUENT CHARACTERISTICS *(continued from page 3 of Form 2-C)* [redacted] OUTFALL NO. 004

PART A – You must provide the results of at least one analysis for every pollutant in this table. Complete one table for each outfall. See instructions for additional details.

1. POLLUTANT	2. EFFLUENT a. MAXIMUM DAILY VALUE (1) CONCENTRATION	a. MAXIMUM DAILY VALUE (2) MASS	b. MAXIMUM 30 DAY VALUE (*if available*) (1) CONCENTRATION	b. MAXIMUM 30 DAY VALUE (2) MASS	c. LONG TERM AVRG. VALUE (*if available*) (1) CONCENTRATION	c. LONG TERM AVRG. VALUE (2) MASS	d. NO. OF ANALYSES	3. UNITS (*specify if blank*) a. CONCEN-TRATION	3. UNITS b. MASS	4. INTAKE (*optional*) a. LONG TERM AVERAGE VALUE (1) CONCENTRATION	4. INTAKE a. LONG TERM AVERAGE VALUE (2) MASS	4. INTAKE b. NO. OF ANALYSES
a. Biochemical Oxygen Demand (*BOD*)	<3	<300	--	--	--	--	1	PPM	LB/DAY	--	--	--
b. Chemical Oxygen Demand (*COD*)**	10.39	761	--	--	--	--	1	PPM	LB/DAY	--	--	--
c. Total Organic Carbon (*TOC*) **	5.7	420	--	--	--	--	1	PPM	LB/DAY	--	--	--
d. Total Suspended Solids (*TSS*)	22	1700	--	--	--	--	1	PPM	LB/DAY	--	--	--
e. Ammonia (*as N*)	<0.19	<14	--	--	--	--	1	PPM	LB/DAY	--	--	--
f. Flow***	VALUE 8.77		VALUE 7.43		VALUE 3.57		35	MGD	--	VALUE --		--
g. Temperature (*winter*)**	VALUE 13.7		VALUE --		VALUE --		1	°C		VALUE --		--
h. Temperature (*summer*)	VALUE 28.8		VALUE --		VALUE --		1	°C		VALUE --		--
i. pH **	MINIMUM 7.38	MAXIMUM 8.96	MINIMUM --	MAXIMUM --			172	STANDARD UNITS				

PART B – Mark "X" in column 2-a for each pollutant you know or have reason to believe is present. Mark "X" in column 2-b for each pollutant you believe to be absent. If you mark column 2a for any pollutant which is limited either directly, or indirectly but expressly, in an effluent limitations guideline, you must provide the results of at least one analysis for that pollutant. For other pollutants for which you mark column 2a, you must provide quantitative data or an explanation of their presence in your discharge. Complete one table for each outfall. See the instructions for additional details and requirements.

1. POLLUTANT AND CAS NO. (*if available*)	2. MARK "X" a. BELIEVED PRESENT	2. MARK "X" b. BELIEVED ABSENT	3. EFFLUENT a. MAXIMUM DAILY VALUE (1) CONCENTRATION	a. MAXIMUM DAILY VALUE (2) MASS	b. MAXIMUM 30 DAY VALUE (*if available*) (1) CONCENTRATION	b. MAXIMUM 30 DAY VALUE (2) MASS	c. LONG TERM AVRG. VALUE (*if available*) (1) CONCENTRATION	c. LONG TERM AVRG. VALUE (2) MASS	d. NO. OF ANALYSES	4. UNITS a. CONCEN-TRATION	4. UNITS b. MASS	5. INTAKE (*optional*) a. LONG TERM AVERAGE VALUE (1) CONCENTRATION	5. INTAKE a. LONG TERM AVERAGE VALUE (2) MASS	5. INTAKE b. NO. OF ANALYSES
a. Bromide** (24959-67-9)	X		5.1	380	--	--	--	--	1	PPM	LB/DA	--	--	--
b. Chlorine, Total Residual	X		<0.1	<10	--	--	--	--	1	PPM	LB/DA	--	--	--
c. Color**	X		13	--	--	--	--	--	1	PCU	--	--	--	--
d. Fecal Coliform		X	No Sample	--	--	--	--	--	0	COL/0.1L	--	--	--	--
e. Fluoride (16984-48-8)	X		<0.9	<70	--	--	--	--	1	PPM	LB/DA	--	--	--
f. Nitrate-Nitrite (*as N*)	X		<1.4	<110	--	--	--	--	1	PPM	LB/DA	--	--	--

* Values are based on weighted average of the 2015 measured data for Pond E ash dewatering well points, Pond E contact waters, and Outfall 502 and data in the 2013 VPDES Permit Reissuance Application for Outfall 004 (or as otherwise indicated).

**Values are based on Outfall 004 data in 2013 VPDES Permit Reissuance Application.

*** Values are based on sum of Outfalls 004, 005, and 502 data in 2013 VPDES Permit Reissuance Application.

00022265

ALTERNATE Interim Configuration:
Dewatering and Contact Waters*

ITEM V-B CONTINUED FROM FRONT

1. POLLUTANT AND CAS NO. (if available)	2. MARK "X"		3. EFFLUENT							4. UNITS		5. INTAKE (optional)		
	a. BELIEVED PRESENT	b. BELIEVED ABSENT	a. MAXIMUM DAILY VALUE		b. MAXIMUM 30 DAY VALUE (if available)		c. LONG TERM AVRG. VALUE (if available)		d. NO. OF ANALYSES	a. CONCEN-TRATION	b. MASS	a. LONG TERM AVERAGE VALUE		b. NO. OF ANALYSES
			(1) CONCENTRATION	(2) MASS	(1) CONCENTRATION	(2) MASS	(1) CONCENTRATION	(2) MASS				(1) CONCENTRATION	(2) MASS	
g. Nitrogen, Total Organic (as N)**	X		0.18	14	0.18	12	0.064	1.91	11	PPM	LB/DA	--	--	--
h. Oil and Grease	X		<4	<300	--	--	--	--	1	PPM	LB/DA	--	--	--
i. Phosphorus (as P), Total (7723-14-0)	X		<0.3	<30	--	--	--	--	1	PPM	LB/DA	--	--	--
j. Radioactivity														
(1) Alpha, Total**		X	<0.734	--	--	--	--	--	1	pCi/L	--	--	--	--
(2) Beta, Total**		X	<2.9	--	--	--	--	--	1	pCi/L	--	--	--	--
(3) Radium, Total**		X	No Sample	--	--	--	--	--	0	pCi/L	--	--	--	--
(4) Radium 226, Total**		X	No Sample	--	--	--	--	--	0	pCi/L	--	--	--	--
k. Sulfate (as SO_4) (14808-79-8)	X		38.6	2830	--	--	--	--	1	PPM	LB/DA	--	--	--
l. Sulfide (as S)	X		<0.18	<14	--	--	--	--	1	PPM	LB/DA	--	--	--
m. Sulfite (as SO_3) (14265-45-3)		X	No Sample	--	--	--	--	--	0	PPM	LB/DA	--	--	--
n. Surfactants**	X		<0.01	<0.74	--	--	--	--	1	PPM	LB/DA	--	--	--
o. Aluminum, Total (7429-90-5)	X		<0.09	<6.6	--	--	--	--	1	PPM	LB/DA	--	--	--
p. Barium, Total (7440-39-3)	X		0.2	20	--	--	--	--	1	PPM	LB/DA	--	--	--
q. Boron, Total (7440-42-8)	X		<0.33	<25	--	--	--	--	1	PPM	LB/DA	--	--	--
r. Cobalt, Total (7440-48-4)	X		<0.005	<0.366	--	--	--	--	1	PPM	LB/DA	--	--	--
s. Iron, Total (7439-89-6)	X		5.7	420	--	--	--	--	1	PPM	LB/DA	--	--	--
t. Magnesium, Total (7439-95-4)	X		14	1100	--	--	--	--	1	PPM	LB/DA	--	--	--
u. Molybdenum, Total (7439-98-7)	X		0.026	1.91	--	--	--	--	1	PPM	LB/DA	--	--	--
v. Manganese, Total (7439-96-5)	X		0.23	17	--	--	--	--	1	PPM	LB/DA	--	--	--
w. Tin, Total (7440-31-5)**	X		<0.005	<0.366	--	--	--	--	1	PPM	LB/DA	--	--	--
x. Titanium, Total (7440-32-6)**	X		<0.002	<0.147	--	--	--	--	1	PPM	LB/DA	--	--	--

 CONTINUE ON PAGE V-3

* Values are based on weighted average of the 2015 measured data for Pond E ash dewatering well points, Pond E contact waters, and Outfall 502 and data in the 2013 VPDES Permit Reissuance Application for Outfall 004 (or as otherwise indicated).

**Values are based on Outfall 004 data in 2013 VPDES Permit Reissuance Application.

00022266

EPA I.D. NUMBER (*copy from Item 1 of Form 1*)	OUTFALL NUMBER
110000340774	004

ALTERNATE Interim Configuration: Dewatering and Contact Waters*

CONTINUED FROM PAGE 3 OF FORM 2-C

PART C - If you are a primary industry and this outfall contains process wastewater, refer to Table 2c-2 in the instructions to determine which of the GC/MS fractions you must test for. Mark "X" in column 2-a for all such GC/MS fractions that apply to your industry and for ALL toxic metals, cyanides, and total phenols. If you are not required to mark column 2-a (*secondary industries, nonprocess wastewater outfalls, and nonrequired GC/MS fractions*), mark "X" in column 2-b for each pollutant you know or have reason to believe is present. Mark "X" in column 2-c for each pollutant you believe is absent. If you mark column 2a for any pollutant, you must provide the results of at least one analysis for that pollutant. If you mark column 2b for any pollutant, you must provide the results of at least one analysis for that pollutant if you know or have reason to believe it will be discharged in concentrations of 10 ppb or greater. If you mark column 2b for acrolein, acrylonitrile, 2,4 dinitrophenol, or 2-methyl-4, 6 dinitrophenol, you must provide the results of at least one analysis for each of these pollutants which you know or have reason to believe that you discharge in concentrations of 100 ppb or greater. Otherwise, for pollutants for which you mark column 2b, you must either submit at least one analysis or briefly describe the reasons the pollutant is expected to be discharged. Note that there are 7 pages to this part; please review each carefully. Complete one table (*all 7 pages*) for each outfall. See instructions for additional details and requirements.

1. POLLUTANT AND CAS NUMBER (*if available*)	2. MARK "X"			3. EFFLUENT							4. UNITS		5. INTAKE (*optional*)		
	a. TESTING REQUIRED	b. BELIEVED PRESENT	c. BELIEVED ABSENT	a. MAXIMUM DAILY VALUE (1) CONCENTRATION	a. MAXIMUM DAILY VALUE (2) MASS	b. MAXIMUM 30 DAY VALUE (*if available*) (1) CONCENTRATION	b. MAXIMUM 30 DAY VALUE (*if available*) (2) MASS	c. LONG TERM AVRG. VALUE (*if available*) (1) CONCENTRATION	c. LONG TERM AVRG. VALUE (*if available*) (2) MASS	d. NO. OF ANALYSES	a. CONCEN-TRATION	b. MASS	a. LONG TERM AVERAGE VALUE (1) CONCENTRATION	a. LONG TERM AVERAGE VALUE (2) MASS	b. NO. OF ANALYSES
METALS, CYANIDE, AND TOTAL PHENOLS															
1M. Antimony, Total (7440-36-0)	X	X		<0.001	<0.074	--	--	--	--	1	PPM	LB/DAY	--	--	--
2M. Arsenic, Total (7440-38-2)	X	X		<0.25	<19	--	--	--	--	1	PPM	LB/DAY	--	--	--
3M. Beryllium, Total (7440-41-7)	X	X		<0.0002	<0.015	--	--	--	--	1	PPM	LB/DAY	--	--	--
4M. Cadmium, Total (7440-43-9)	X	X		<0.0003	<0.022	--	--	--	--	1	PPM	LB/DAY	--	--	--
5M. Chromium, Total (7440-47-3)	X	X		<0.001	<0.074	--	--	--	--	1	PPM	LB/DAY	--	--	--
6M. Copper, Total (7440-50-8)	X	X		<0.007	<0.513	--	--	--	--	1	PPM	LB/DAY	--	--	--
7M. Lead, Total (7439-92-1)	X	X		<0.001	<0.074	--	--	--	--	1	PPM	LB/DAY	--	--	--
8M. Mercury, Total (7439-97-6)	X	X		<0.0002	<0.015	--	--	--	--	1	PPM	LB/DAY	--	--	--
9M. Nickel, Total (7440-02-0)	X	X		<0.010	<0.732	--	--	--	--	1	PPM	LB/DAY	--	--	--
10M. Selenium, Total (7782-49-2)	X	X		<0.003	<0.220	--	--	--	--	1	PPM	LB/DAY	--	--	--
11M. Silver, Total (7440-22-4)	X	X		<0.0003	<0.022	--	--	--	--	1	PPM	LB/DAY	--	--	--
12M. Thallium, Total (7440-28-0)	X	X		<0.0005	<0.037	--	--	--	--	1	PPM	LB/DAY	--	--	--
13M. Zinc, Total (7440-66-6)	X	X		<0.02	<1.5	--	--	--	--	1	PPM	LB/DAY	--	--	--
14M. Cyanide, Total (57-12-5)	X	X		<0.01	<0.74	--	--	--	--	1	PPM	LB/DAY	--	--	--
15M. Phenols, Total **	X	X		0.01	0.74	--	--	--	--	1	PPM	LB/DAY	--	--	--
DIOXIN															
2,3,7,8-Tetra-chlorodibenzo-P-Dioxin (1764-01-6)			X	DESCRIBE RESULTS No Sample											

* Values are based on weighted average of the 2015 measured data for Pond E ash dewatering well points, Pond E contact waters, and Outfall 502 and data in the 2013 VPDES Permit Reissuance Application for Outfall 004 (or as otherwise indicated).
**Values are based on Outfall 004 data in 2013 VPDES Permit Reissuance Application.

00022267

ALTERNATE Interim Configuration: Dewatering and Contact Waters*

CONTINUED FROM THE FRONT

1. POLLUTANT AND CAS NUMBER (if available)	2. MARK "X"			3. EFFLUENT							4. UNITS		5. INTAKE (optional)		
	a. TESTING REQUIRED	b. BELIEVED PRESENT	c. BELIEVED ABSENT	a. MAXIMUM DAILY VALUE		b. MAXIMUM 30 DAY VALUE (if available)		c. LONG TERM AVRG. VALUE (if available)		d. NO. OF ANALYSES	a. CONCEN-TRATION	b. MASS	a. LONG TERM AVERAGE VALUE		b. NO. OF ANALYSES
				(1) CONCENTRATION	(2) MASS	(1) CONCENTRATION	(2) MASS	(1) CONCENTRATION	(2) MASS				(1) CONCENTRATION	(2) MASS	
GC/MS FRACTION – VOLATILE COMPOUNDS															
1V. Accrolein (107-02-8)	X	X		<6.9	<0.51	--	--	--	--	1	PPB	LB/DAY	--	--	--
2V. Acrylonitrile (107-13-1)	X	X		<1.3	<0.10	--	--	--	--	1	PPB	LB/DAY	--	--	--
3V. Benzene (71-43-2)	X	X		<2.7	<0.20	--	--	--	--	1	PPB	LB/DAY	--	--	--
4V. Bis (*Chloromethyl*) Ether (542-88-1)				*DELISTED 02-4-1981* ANALYSIS NOT REQUIRED FOR THIS PARAMETER											
5V. Bromoform (75-25-2)	X	X		<2.9	<0.22	--	--	--	--	1	PPB	LB/DAY	--	--	--
6V. Carbon Tetrachloride (56-23-5)	X	X		<1.8	<0.14	--	--	--	--	1	PPB	LB/DAY	--	--	--
7V. Chlorobenzene (108-90-7)	X	X		<4	<0.3	--	--	--	--	1	PPB	LB/DAY	--	--	--
8V. Chlorodibromomethane (124-48-1)	X	X		<2.0	<0.15	--	--	--	--	1	PPB	LB/DAY	--	--	--
9V. Chloroethane (75-00-3)**	X	X		<1.1	<0.09	--	--	--	--	1	PPB	LB/DAY	--	--	--
10V. 2-Chloroethylvinyl Ether (110-75-8)**	X	X		<1.2	<0.09	--	--	--	--	1	PPB	LB/DAY	--	--	--
11V. Chloroform (67-66-3)	X	X		<11	<0.81	--	--	--	--	1	PPB	LB/DAY	--	--	--
12V. Dichlorobromomethane (75-27-4)	X	X		<1.4	<0.11	--	--	--	--	1	PPB	LB/DAY	--	--	--
13V. Dichlorodifluoromethane (75-71-8)				*DELISTED 01-8-1981* ANALYSIS NOT REQUIRED FOR THIS PARAMETER											
14V. 1,1-Dichloroethane (75-34-3)**	X	X		<4.7	<0.35	--	--	--	--	1	PPB	LB/DAY	--	--	--
15V. 1,2-Dichloroethane (107-06-2)	X	X		<1.8	<0.14	--	--	--	--	1	PPB	LB/DAY	--	--	--
16V. 1,1-Dichloroethylene (75-35-4)	X	X		<1.8	<0.14	--	--	--	--	1	PPB	LB/DAY	--	--	--
17V. 1,2-Dichloropropane (78-87-5)	X	X		<4	<0.3	--	--	--	--	1	PPB	LB/DAY	--	--	--
18V. 1,3-Dichloropropylene (542-75-6)	X	X		<3.6	0.27	--	--	--	--	1	PPB	LB/DAY	--	--	--
19V. Ethylbenzene (100-41-4)	X	X		<4.3	<0.32	--	--	--	--	1	PPB	LB/DAY	--	--	--
20V. Methyl Bromide (74-83-9)	X	X		<0.97	<0.08	--	--	--	--	1	PPB	LB/DAY	--	--	--
21V. Methyl Chloride (74-87-3) **	X	X		<1.1	<0.09	--	--	--	--	1	PPB	LB/DAY	--	--	--

 CONTINUE ON PAGE V-5

* Values are based on weighted average of the 2015 measured data for Pond E ash dewatering well points, Pond E contact waters, and Outfall 502 and data in the 2013 VPDES Permit Reissuance Application for Outfall 004 (or as otherwise indicated).
**Values are based on Outfall 004 data in 2013 VPDES Permit Reissuance Application.

00022268

ALTERNATE Interim Configuration:
Dewatering and Contact Waters*

CONTINUED FROM PAGE V-4

1. POLLUTANT AND CAS NUMBER (if available)	2. MARK "X"			3. EFFLUENT							4. UNITS		5. INTAKE (optional)		
	a. TESTING REQUIRED	b. BELIEVED PRESENT	c. BELIEVED ABSENT	a. MAXIMUM DAILY VALUE		b. MAXIMUM 30 DAY VALUE (if available)		c. LONG TERM AVRG. VALUE (if available)		d. NO. OF ANALYSES	a. CONCEN-TRATION	b. MASS	a. LONG TERM AVERAGE VALUE		b. NO. OF ANALYSES
				(1) CONCENTRATION	(2) MASS	(1) CONCENTRATION	(2) MASS	(1) CONCENTRATION	(2) MASS				(1) CONCENTRATION	(2) MASS	
GC/MS FRACTION – VOLATILE COMPOUNDS (continued)															
22V. Methylene Chloride (75-09-2)	X	X		<1.8	<0.14	--	--	--	--	1	PPB	LB/DAY	--	--	--
23V. 1,1,2,2-Tetrachloroethane (79-34-5)	X	X		<4.2	<0.31	--	--	--	--	1	PPB	LB/DAY	--	--	--
24V. Tetrachloro-ethylene (127-18-4)	X	X		<2.6	<0.20	--	--	--	--	1	PPB	LB/DAY	--	--	--
25V. Toluene (108-88-3)	X	X		<4	<0.3	--	--	--	--	1	PPB	LB/DAY	--	--	--
26V. 1,2-Trans-Dichloroethylene (156-60-5)	X	X		<1.0	<0.08	--	--	--	--	1	PPB	LB/DAY	--	--	--
27V. 1,1,1-Trichloro-ethane (71-55-6)**	X	X		<3.8	<0.28	--	--	--	--	1	PPB	LB/DAY	--	--	--
28V. 1,1,2-Trichloro-ethane (79-00-5)	X	X		<4	<0.3	--	--	--	--	1	PPB	LB/DAY	--	--	--
29V Trichloro-ethylene (79-01-6)	X	X		<1.3	<0.10	--	--	--	--	1	PPB	LB/DAY	--	--	--
30V. Trichloro-fluoromethane (75-69-4)				DELISTED 01-8-1981	ANALYSIS NOT REQUIRED FOR THIS PARAMETER										
31V. Vinyl Chloride (75-01-4)	X	X		<1.2	<0.09	--	--	--	--	1	PPB	LB/DAY	--	--	--
GC/MS FRACTION – ACID COMPOUNDS															
1A. 2-Chlorophenol (95-57-8)	X	X		<4	<0.3	--	--	--	--	1	PPB	LB/DAY	--	--	--
2A. 2,4-Dichloro-phenol (120-83-2)	X	X		<4	<0.3	--	--	--	--	1	PPB	LB/DAY	--	--	--
3A. 2,4-Dimethyl-phenol (105-67-9)	X	X		<5	<0.4	--	--	--	--	1	PPB	LB/DAY	--	--	--
4A. 4,6-Dinitro-O-Cresol (534-52-1)	X	X		<31	<2.3	--	--	--	--	1	PPB	LB/DAY	--	--	--
5A. 2,4-Dinitro-phenol (51-28-5)	X	X		<5	<0.4	--	--	--	--	1	PPB	LB/DAY	--	--	--
6A. 2-Nitrophenol (88-75-5)**	X	X		<5	<0.4	--	--	--	--	1	PPB	LB/DAY	--	--	--
7A. 4-Nitrophenol (100-02-7)**	X	X		<5	<0.4	--	--	--	--	1	PPB	LB/DAY	--	--	--
8A. P-Chloro-M-Cresol (59-50-7)**	X	X		<5	<0.4	--	--	--	--	1	PPB	LB/DAY	--	--	--
9A. Pentachloro-phenol (87-86-5)	X	X		<5	<0.4	--	--	--	--	1	PPB	LB/DAY	--	--	--
10A. Phenol (108-95-2)	X	X		<4	<0.3	--	--	--	--	1	PPB	LB/DAY	--	--	--
11A. 2,4,6-Trichloro-phenol (88-05-2)	X	X		<4	<0.3	--	--	--	--	1	PPB	LB/DAY	--	--	--

 CONTINUE ON REVERSE

* Values are based on weighted average of the 2015 measured data for Pond E ash dewatering well points, Pond E contact waters, and Outfall 502 and data in the 2013 VPDES Permit Reissuance Application for Outfall 004 (or as otherwise indicated).
**Values are based on Outfall 004 data in 2013 VPDES Permit Reissuance Application.

000022269

ALTERNATE Interim Configuration:
Dewatering and Contact Waters*

CONTINUED FROM THE FRONT

1. POLLUTANT AND CAS NUMBER (if available)	2. MARK "X"			3. EFFLUENT							4. UNITS		5. INTAKE (optional)		
	a. TESTING REQUIRED	b. BELIEVED PRESENT	c. BELIEVED ABSENT	a. MAXIMUM DAILY VALUE		b. MAXIMUM 30 DAY VALUE (if available)		c. LONG TERM AVRG. VALUE (if available)		d. NO. OF ANALYSES	a. CONCEN-TRATION	b. MASS	a. LONG TERM AVERAGE VALUE		b. NO. OF ANALYSES
				(1) CONCENTRATION	(2) MASS	(1) CONCENTRATION	(2) MASS	(1) CONCENTRATION	(2) MASS				(1) CONCENTRATION	(2) MASS	
GC/MS FRACTION – BASE/NEUTRAL COMPOUNDS															
1B. Acenaphthene (83-32-9)	X	X		<4	<0.3	--	--	--	--	1	PPB	LB/DAY	--	--	--
2B. Acenaphtylene (208-96-8) **	X	X		<5	<0.4	--	--	--	--	1	PPB	LB/DAY	--	--	--
3B. Anthracene (120-12-7)	X	X		<4	<0.3	--	--	--	--	1	PPB	LB/DAY	--	--	--
4B. Benzidine (92-87-5)	X	X		<20	<1.5	--	--	--	--	1	PPB	LB/DAY	--	--	--
5B. Benzo (*a*) Anthracene (56-55-3)	X	X		<4	<0.3	--	--	--	--	1	PPB	LB/DAY	--	--	--
6B. Benzo (*a*) Pyrene (50-32-8)	X	X		<4	<0.3	--	--	--	--	1	PPB	LB/DAY	--	--	--
7B. 3,4-Benzo-fluoranthene (205-99-2)	X	X		<4	<0.3	--	--	--	--	1	PPB	LB/DAY	--	--	--
8B. Benzo (*ghi*) ** Perylene (191-24-2)	X	X		<5	<0.4	--	--	--	--	1	PPB	LB/DAY	--	--	--
9B. Benzo (*k*) Fluoranthene (207-08-9)	X	X		<4	<0.3	--	--	--	--	1	PPB	LB/DAY	--	--	--
10B. Bis (*2-Chloro-ethoxy*) Methane (111-91-1) **	X	X		<5	<0.4	--	--	--	--	1	PPB	LB/DAY	--	--	--
11B. Bis (*2-Chloro-ethyl*) Ether (111-44-4)	X	X		<4	<0.3	--	--	--	--	1	PPB	LB/DAY	--	--	--
12B. Bis (*2-Chloroisopropyl*) Ether (102-80-1)	X	X		<4	<0.3	--	--	--	--	1	PPB	LB/DAY	--	--	--
13B. Bis (*2-Ethyl-hexyl*) Phthalate (117-81-7)	X	X		<4	<0.3	--	--	--	--	1	PPB	LB/DAY	--	--	--
14B. 4-Bromophenyl Phenyl Ether (101-55-3) **	X	X		<5	<0.4	--	--	--	--	1	PPB	LB/DAY	--	--	--
15B. Butyl Benzyl Phthalate (85-68-7)	X	X		<4	<0.3	--	--	--	--	1	PPB	LB/DAY	--	--	--
16B. 2-Chloro-naphthalene (91-58-7)	X	X		<4	<0.3	--	--	--	--	1	PPB	LB/DAY	--	--	--
17B. 4-Chloro-phenyl Phenyl Ether (7005-72-3) **	X	X		<5	<0.4	--	--	--	--	1	PPB	LB/DAY	--	--	--
18B. Chrysene (218-01-9)	X	X		<4	<0.3	--	--	--	--	1	PPB	LB/DAY	--	--	--
19B. Dibenzo (*a,h*) Anthracene (53-70-3)	X	X		<4	<0.3	--	--	--	--	1	PPB	LB/DAY	--	--	--
20B. 1,2-Dichloro-benzene (95-50-1)	X	X		<4	<0.3	--	--	--	--	1	PPB	LB/DAY	--	--	--
21B. 1,3-Di-chloro-benzene (541-73-1)	X	X		<4	<0.3	--	--	--	--	1	PPB	LB/DAY	--	--	--

 CONTINUE ON PAGE V-7

* Values are based on weighted average of the 2015 measured data for Pond E ash dewatering well points, Pond E contact waters, and Outfall 502 and data in the 2013 VPDES Permit Reissuance Application for Outfall 004 (or as otherwise indicated).
**Values are based on Outfall 004 data in 2013 VPDES Permit Reissuance Application.

00022270

ALTERNATE Interim Configuration:
Dewatering and Contact Waters*

CONTINUED FROM PAGE V-6

1. POLLUTANT AND CAS NUMBER (if available)	2. MARK "X"			3. EFFLUENT							4. UNITS		5. INTAKE (optional)		
	a. TESTING REQUIRED	b. BELIEVED PRESENT	c. BELIEVED ABSENT	a. MAXIMUM DAILY VALUE		b. MAXIMUM 30 DAY VALUE (if available)		c. LONG TERM AVRG. VALUE (if available)		d. NO. OF ANALYSES	a. CONCEN-TRATION	b. MASS	a. LONG TERM AVERAGE VALUE		b. NO. OF ANALYSES
				(1) CONCENTRATION	(2) MASS	(1) CONCENTRATION	(2) MASS	(1) CONCENTRATION	(2) MASS				(1) CONCENTRATION	(2) MASS	
GC/MS FRACTION – BASE/NEUTRAL COMPOUNDS (continued)															
22B. 1,4-Dichloro-benzene (106-46-7)	X	X		<4	<0.3	--	--	--	--	1	PPB	LB/DAY	--	--	--
23B. 3,3-Dichloro-benzidine (91-94-1)	X	X		<5	<0.4	--	--	--	--	1	PPB	LB/DAY	--	--	--
24B. Diethyl Phthalate (84-66-2)	X	X		<4	<0.3	--	--	--	--	1	PPB	LB/DAY	--	--	--
25B. Dimethyl Phthalate (131-11-3)	X	X		<4	<0.3	--	--	--	--	1	PPB	LB/DAY	--	--	--
26B. Di-N-Butyl Phthalate (84-74-2)	X	X		<4	<0.3	--	--	--	--	1	PPB	LB/DAY	--	--	--
27B. 2,4-Dinitro-toluene (121-14-2)	X	X		<4	<0.3	--	--	--	--	1	PPB	LB/DAY	--	--	--
28B. 2,6-Dinitro-toluene (606-20-2) **	X	X		<5	<0.4	--	--	--	--	1	PPB	LB/DAY	--	--	--
29B. Di-N-Octyl Phthalate (117-84-0) **	X	X		<5	<0.4	--	--	--	--	1	PPB	LB/DAY	--	--	--
30B. 1,2-Diphenyl-hydrazine (as Azo-benzene) (122-66-7)	X	X		<0.3	<0.1	--	--	--	--	1	PPB	LB/DAY	--	--	--
31B. Fluoranthene (206-44-0)	X	X		<4	<0.3	--	--	--	--	1	PPB	LB/DAY	--	--	--
32B Fluorene (86-73-7)	X	X		<4	<0.3	--	--	--	--	1	PPB	LB/DAY	--	--	--
33B. Hexachloro-benzene (118-74-1)	X	X		<4	<0.3	--	--	--	--	1	PPB	LB/DAY	--	--	--
34B. Hexachloro-butadiene (87-68-3)	X	X		<4	<0.3	--	--	--	--	1	PPB	LB/DAY	--	--	--
35B. Hexachloro-cyclopentadiene (77-47-4)	X	X		<4	<0.3	--	--	--	--	1	PPB	LB/DAY	--	--	--
36B Hexachloro-ethane (67-72-1)	X	X		<4	<0.3	--	--	--	--	1	PPB	LB/DAY	--	--	--
37B. Indeno (1,2,3-cd) Pyrene (193-39-5)	X	X		<4	<0.3	--	--	--	--	1	PPB	LB/DAY	--	--	--
38B. Isophorone (78-59-1)	X	X		<4	<0.3	--	--	--	--	1	PPB	LB/DAY	--	--	--
39B. Naphthalene (91-20-3)**	X	X		<5	<0.4	--	--	--	--	1	PPB	LB/DAY	--	--	--
40B. Nitrobenzene (98-95-3)	X	X		<4	<0.3	--	--	--	--	1	PPB	LB/DAY	--	--	--
41B. N-Nitro-sodimethylamine (62-75-9)	X	X		<4	<0.3	--	--	--	--	1	PPB	LB/DAY	--	--	--
42B. N-Nitrosodi-N-Propylamine (621-64-7)	X	X		<4	<0.3	--	--	--	--	1	PPB	LB/DAY	--	--	--

* Values are based on weighted average of the 2015 measured data for Pond E ash dewatering well points, Pond E contact waters, and Outfall 502 and data in the 2013 VPDES Permit Reissuance Application for Outfall 004 (or as otherwise indicated).
**Values are based on Outfall 004 data in 2013 VPDES Permit Reissuance Application.

00022271

CONTINUED FROM THE FRONT

1. POLLUTANT AND CAS NUMBER (*if available*)	2. MARK "X"			3. EFFLUENT							4. UNITS		5. INTAKE (*optional*)		
	a. TESTING REQUIRED	b. BELIEVED PRESENT	c. BELIEVED ABSENT	a. MAXIMUM DAILY VALUE		b. MAXIMUM 30 DAY VALUE (*if available*)		c. LONG TERM AVRG. VALUE (*if available*)		d. NO. OF ANALYSES	a. CONCEN-TRATION	b. MASS	a. LONG TERM AVERAGE VALUE		b. NO. OF ANALYSES
				(1) CONCENTRATION	(2) MASS	(1) CONCENTRATION	(2) MASS	(1) CONCENTRATION	(2) MASS				(1) CONCENTRATION	(2) MASS	
GC/MS FRACTION – BASE/NEUTRAL COMPOUNDS (*continued*)															
43B. N-Nitro-sodiphenylamine (86-30-6)	X	X		<4	<0.3	--	--	--	--	1	PPB	LB/DAY	--	--	--
44B. Phenanthrene (85-01-8)**	X	X		<5	<0.4	--	--	--	--	1	PPB	LB/DAY	--	--	--
45B. Pyrene (129-00-0)	X	X		<4	<0.3	--	--	--	--	1	PPB	LB/DAY	--	--	--
46B. 1,2,4-Tri-chlorobenzene (120-82-1)	X	X		<4	<0.3	--	--	--	--	1	PPB	LB/DAY	--	--	--
GC/MS FRACTION – PESTICIDES															
1P. Aldrin (309-00-2)	X	X		<0.03	<0.01	--	--	--	--	1	PPB	LB/DAY	--	--	--
2P. α-BHC (319-84-6)	X	X		<0.03	<0.01	--	--	--	--	1	PPB	LB/DAY	--	--	--
3P. β-BHC (319-85-7)	X	X		<0.03	<0.01	--	--	--	--	1	PPB	LB/DAY	--	--	--
4P. γ-BHC (58-89-9)	X	X		<0.03	<0.01	--	--	--	--	1	PPB	LB/DAY	--	--	--
5P. δ-BHC (319-86-8)	X	X		<0.03	<0.01	--	--	--	--	1	PPB	LB/DAY	--	--	--
6P. Chlordane (57-74-9)	X	X		<0.2	<0.1	--	--	--	--	1	PPB	LB/DAY	--	--	--
7P. 4,4'-DDT (50-29-3)	X	X		<0.1	<0.1	--	--	--	--	1	PPB	LB/DAY	--	--	--
8P. 4,4'-DDE (72-55-9)	X	X		<0.1	<0.1	--	--	--	--	1	PPB	LB/DAY	--	--	--
9P. 4,4'-DDD (72-54-8)	X	X		<0.1	<0.1	--	--	--	--	1	PPB	LB/DAY	--	--	--
10P. Dieldrin (60-57-1)	X	X		<0.1	<0.1	--	--	--	--	1	PPB	LB/DAY	--	--	--
11P. α-Enosulfan (115-29-7)	X	X		<0.1	<0.1	--	--	--	--	1	PPB	LB/DAY	--	--	--
12P. β-Endosulfan (115-29-7)	X	X		<0.1	<0.1	--	--	--	--	1	PPB	LB/DAY	--	--	--
13P. Endosulfan Sulfate (1031-07-8)	X	X		<0.1	<0.1	--	--	--	--	1	PPB	LB/DAY	--	--	--
14P. Endrin (72-20-8)	X	X		<0.1	<0.1	--	--	--	--	1	PPB	LB/DAY	--	--	--
15P. Endrin Aldehyde (7421-93-4)	X	X		<0.1	<0.1	--	--	--	--	1	PPB	LB/DAY	--	--	--
16P. Heptachlor (76-44-8)	X	X		<0.03	<0.01	--	--	--	--	1	PPB	LB/DAY	--	--	--

 CONTINUE ON PAGE V-9

* Values are based on weighted average of the 2015 measured data for Pond E ash dewatering well points, Pond E contact waters, and Outfall 502 and data in the 2013 VPDES Permit Reissuance Application for Outfall 004 (or as otherwise indicated).

**Values are based on Outfall 004 data in 2013 VPDES Permit Reissuance Application.

00022272

EPA I.D. NUMBER (*copy from Item 1 of Form 1*)	OUTFALL NUMBER
110000340774	004

ALTERNATE Interim Configuration: Dewatering and Contact Waters*

CONTINUED FROM PAGE V-8

1. POLLUTANT AND CAS NUMBER (*if available*)	2. MARK "X"			3. EFFLUENT							4. UNITS		5. INTAKE (*optional*)		
	a. TESTING REQUIRED	b. BELIEVED PRESENT	c. BELIEVED ABSENT	a. MAXIMUM DAILY VALUE		b. MAXIMUM 30 DAY VALUE (*if available*)		c. LONG TERM AVRG. VALUE (*if available*)		d. NO. OF ANALYSES	a. CONCEN-TRATION	b. MASS	a. LONG TERM AVERAGE VALUE		b. NO. OF ANALYSES
				(1) CONCENTRATION	(2) MASS	(1) CONCENTRATION	(2) MASS	(1) CONCENTRATION	(2) MASS				(1) CONCENTRATION	(2) MASS	
GC/MS FRACTION – PESTICIDES (*continued*)															
17P. Heptachlor Epoxide (1024-57-3)	X	X		<0.1	<0.1	--	--	--	--	1	PPB	LB/DAY	--	--	--
18P. PCB-1242 (53469-21-9) **	X	X		<1	<0.1	--	--	--	--	1	PPB	LB/DAY	--	--	--
19P. PCB-1254 (11097-69-1) **	X	X		<1	<0.1	--	--	--	--	1	PPB	LB/DAY	--	--	--
20P. PCB-1221 (11104-28-2)**	X	X		<1	<0.1	--	--	--	--	1	PPB	LB/DAY	--	--	--
21P. PCB-1232 (11141-16-5) **	X	X		<1	<0.1	--	--	--	--	1	PPB	LB/DAY	--	--	--
22P. PCB-1248 (12672-29-6)**	X	X		<1	<0.1	--	--	--	--	1	PPB	LB/DAY	--	--	--
23P. PCB-1260 (11096-82-5)**	X	X		<1	<0.1	--	--	--	--	1	PPB	LB/DAY	--	--	--
24P. PCB-1016 (12674-11-2)**	X	X		<1	<0.1	--	--	--	--	1	PPB	LB/DAY	--	--	--
25P. Toxaphene (8001-35-2)	X	X		<3	<0.3	--	--	--	--	1	PPB	LB/DAY	--	--	--

* Values are based on weighted average of the 2015 measured data for Pond E ash dewatering well points, Pond E contact waters, and Outfall 502 and data in the 2013 VPDES Permit Reissuance Application for Outfall 004 (or as otherwise indicated).

**Values are based on Outfall 004 data in 2013 VPDES Permit Reissuance Application.

00022273

PLEASE PRINT OR TYPE IN THE UNSHADED AREAS ONLY. You may report some or all of this information on separate sheets (*use the same format*) instead of completing these pages.
SEE INSTRUCTIONS.

EPA I.D. NUMBER (*copy from Item 1 of Form 1*): 110000340774

ALTERNATE Interim Configuration: Dewatering and Contact Waters*

V. INTAKE AND EFFLUENT CHARACTERISTICS *(continued from page 3 of Form 2-C)* [redacted] OUTFALL NO. 001/002

PART A –You must provide the results of at least one analysis for every pollutant in this table. Complete one table for each outfall. See instructions for additional details.

1. POLLUTANT	2. EFFLUENT a. MAXIMUM DAILY VALUE (1) CONCENTRATION	(2) MASS	b. MAXIMUM 30 DAY VALUE (*if available*) (1) CONCENTRATION	(2) MASS	c. LONG TERM AVRG. VALUE (*if available*) (1) CONCENTRATION	(2) MASS	d. NO. OF ANALYSES	3. UNITS (*specify if blank*) a. CONCEN-TRATION	b. MASS	4. INTAKE (*optional*) a. LONG TERM AVERAGE VALUE (1) CONCENTRATION	(2) MASS	b. NO. OF ANALYSES
a. Biochemical Oxygen Demand (*BOD*)	< 3	<4000	--	--	--	--	1	PPM	LB/DAY	--	--	--
b. Chemical Oxygen Demand (*COD*) **	14.66	15440	--	--	--	--	1	PPM	LB/DAY	--	--	--
c. Total Organic Carbon (*TOC*) **	25.8	27200	--	--	--	--	1	PPM	LB/DAY	--	--	--
d. Total Suspended Solids (*TSS*)	13	<14000	--	--	--	--	1	PPM	LB/DAY	--	--	--
e. Ammonia (*as N*)	<0.08	<85	--	--	--	--	1	PPM	LB/DAY	--	--	--
f. Flow ***	VALUE 126.2		VALUE 125.3		VALUE 87.36		36	MGD	--	VALUE --		--
g. Temperature** (*winter*)	VALUE 15.5		VALUE --		VALUE --		1	°C		VALUE --		--
h. Temperature (*summer*)	VALUE 38.9		VALUE --		VALUE --		1	°C		VALUE --		--
i. pH **	MINIMUM 7.7	MAXIMUM 8.4	MINIMUM --	MAXIMUM --			36	STANDARD UNITS				

PART B – Mark "X" in column 2-a for each pollutant you know or have reason to believe is present. Mark "X" in column 2-b for each pollutant you believe to be absent. If you mark column 2a for any pollutant which is limited either directly, or indirectly but expressly, in an effluent limitations guideline, you must provide the results of at least one analysis for that pollutant. For other pollutants for which you mark column 2a, you must provide quantitative data or an explanation of their presence in your discharge. Complete one table for each outfall. See the instructions for additional details and requirements.

1. POLLUTANT AND CAS NO. (*if available*)	2. MARK "X" a. BELIEVED PRESENT	b. BELIEVED ABSENT	3. EFFLUENT a. MAXIMUM DAILY VALUE (1) CONCENTRATION	(2) MASS	b. MAXIMUM 30 DAY VALUE (*if available*) (1) CONCENTRATION	(2) MASS	c. LONG TERM AVRG. VALUE (*if available*) (1) CONCENTRATION	(2) MASS	d. NO. OF ANALYSES	4. UNITS a. CONCEN-TRATION	b. MASS	5. INTAKE (*optional*) a. LONG TERM AVERAGE VALUE (1) CONCENTRATION	(2) MASS	b. NO. OF ANALYSES
a. Bromide ** (24959-67-9)	X		0.28	300	--	--	--	--	1	PPM	LB/DA	--	--	--
b. Chlorine, Total Residual	X		<0.1	<200	--	--	--	--	1	PPM	LB/DA	--	--	--
c. Color **	X		20	--	--	--	--	--	1	PCU	--	--	--	--
d. Fecal Coliform **		X	No Sample	--	--	--	--	--	0	COL/0.1L	--	--	--	--
e. Fluoride (16984-48-8)	X		0.2	300	--	--	--	--	1	PPM	LB/DA	--	--	--
f. Nitrate-Nitrite (as N)	X		<2.5	<2700	--	--	--	--	1	PPM	LB/DA	--	--	--

* Values are based on weighted average of the 2015 measured data for Pond E ash dewatering well points and Pond E contact waters, and data in 2013 VPDES Permit Reissuance Application for Outfall 001/002 (or as otherwise indicated).
** Values are based on Outfall 001/002 data in 2013 VPDES Permit Reissuance Application.
*** Values are based on sum of Outfall 001/002 and Outfall 005 flows in 2013 VPDES Permit Reissuance Application.

00022274

ALTERNATE Interim Configuration: Dewatering and Contact Waters*

ITEM V-B CONTINUED FROM FRONT

1. POLLUTANT AND CAS NO. (if available)	2. MARK "X"		3. EFFLUENT							4. UNITS		5. INTAKE (optional)		
	a. BELIEVED PRESENT	b. BELIEVED ABSENT	a. MAXIMUM DAILY VALUE		b. MAXIMUM 30 DAY VALUE (if available)		c. LONG TERM AVRG. VALUE (if available)		d. NO. OF ANALYSES	a. CONCEN-TRATION	b. MASS	a. LONG TERM AVERAGE VALUE		b. NO. OF ANALYSES
			(1) CONCENTRATION	(2) MASS	(1) CONCENTRATION	(2) MASS	(1) CONCENTRATION	(2) MASS				(1) CONCENTRATION	(2) MASS	
g. Nitrogen, Total Organic (as N)**	X		0.4	500	--	--	--	--	1	PPM	LB/DA	--	--	--
h. Oil and Grease	X		<5	<6000	--	--	--	--	1	PPM	LB/DA	--	--	--
i. Phosphorus (as P), Total (7723-14-0)	X		<0.33	<350	--	--	--	--	1	PPM	LB/DA	--	--	--
j. Radioactivity														
(1) Alpha, Total**		X	<0.646	--	--	--	--	--	1	pCi/L	--	--	--	--
(2) Beta, Total**		X	<2.79	--	--	--	--	--	1	pCi/L	--	--	--	--
(3) Radium, Total**		X	--	--	--	--	--	--	1	pCi/L	--	--	--	--
(4) Radium 226, Total**		X	--	--	--	--	--	--	1	pCi/L	--	--	--	--
k. Sulfate (as SO_4) (14808-79-8)	X		28.1	29600	--	--	--	--	1	PPM	LB/DA	--	--	--
l. Sulfide (as S)	X		<0.06	<64	--	--	--	--	1	PPM	LB/DA	--	--	--
m. Sulfite** (as SO_3) (14265-45-3)		X	No Sample	--	--	--	--	--	0	PPM	LB/DA	--	--	--
n. Surfactants**	X		<0.01	<11	--	--	--	--	1	PPM	LB/DA	--	--	--
o. Aluminum, Total (7429-90-5)	X		<0.09	<95	--	--	--	--	1	PPM	LB/DA	--	--	--
p. Barium, Total (7440-39-3)	X		0.1	200	--	--	--	--	1	PPM	LB/DA	--	--	--
q. Boron, Total (7440-42-8)	X		0.04	43	--	--	--	--	1	PPM	LB/DA	--	--	--
r. Cobalt, Total (7440-48-4)	X		<0.001	<1.06	--	--	--	--	1	PPM	LB/DA	--	--	--
s. Iron, Total (7439-89-6)	X		0.48	510	--	--	--	--	1	PPM	LB/DA	--	--	--
t. Magnesium, Total (7439-95-4)	X		8.24	8680	--	--	--	--	1	PPM	LB/DA	--	--	--
u. Molybdenum, Total (7439-98-7)	X		<0.002	<2.11	--	--	--	--	1	PPM	LB/DA	--	--	--
v. Manganese, Total (7439-96-5)	X		0.13	140	--	--	--	--	1	PPM	LB/DA	--	--	--
w. Tin, Total (7440-31-5)**	X		<0.005	<5.27	--	--	--	--	1	PPM	LB/DA	--	--	--
x. Titanium, Total (7440-32-6)**	X		<0.005	<5.27	--	--	--	--	1	PPM	LB/DA	--	--	--

 CONTINUE ON PAGE V-3

* Values are based on weighted average of the 2015 measured data for Pond E ash dewatering well points and Pond E contact waters , and data in 2013 VPDES Permit Reissuance Application for Outfall 001/002 (or as otherwise indicated).

** Values are based on Outfall 001/002 data in 2013 VPDES Permit Reissuance Application.

00022275

EPA I.D. NUMBER (*copy from Item 1 of Form 1*)	OUTFALL NUMBER
110000340774	001/002

ALTERNATE Interim Configuration: Dewatering and Contact Waters*

CONTINUED FROM PAGE 3 OF FORM 2-C

PART C - If you are a primary industry and this outfall contains process wastewater, refer to Table 2c-2 in the instructions to determine which of the GC/MS fractions you must test for. Mark "X" in column 2-a for all such GC/MS fractions that apply to your industry and for ALL toxic metals, cyanides, and total phenols. If you are not required to mark column 2-a (*secondary industries, nonprocess wastewater outfalls, and nonrequired GC/MS fractions*), mark "X" in column 2-b for each pollutant you know or have reason to believe is present. Mark "X" in column 2-c for each pollutant you believe is absent. If you mark column 2a for any pollutant, you must provide the results of at least one analysis for that pollutant. If you mark column 2b for any pollutant, you must provide the results of at least one analysis for that pollutant if you know or have reason to believe it will be discharged in concentrations of 10 ppb or greater. If you mark column 2b for acrolein, acrylonitrile, 2,4 dinitrophenol, or 2-methyl-4, 6 dinitrophenol, you must provide the results of at least one analysis for each of these pollutants which you know or have reason to believe that you discharge in concentrations of 100 ppb or greater. Otherwise, for pollutants for which you mark column 2b, you must either submit at least one analysis or briefly describe the reasons the pollutant is expected to be discharged. Note that there are 7 pages to this part; please review each carefully. Complete one table (*all 7 pages*) for each outfall. See instructions for additional details and requirements.

1. POLLUTANT AND CAS NUMBER (*if available*)	2. MARK "X"			3. EFFLUENT							4. UNITS		5. INTAKE (*optional*)		
	a. TESTING REQUIRED	b. BELIEVED PRESENT	c. BELIEVED ABSENT	a. MAXIMUM DAILY VALUE (1) CONCENTRATION	a. MAXIMUM DAILY VALUE (2) MASS	b. MAXIMUM 30 DAY VALUE (*if available*) (1) CONCENTRATION	b. MAXIMUM 30 DAY VALUE (*if available*) (2) MASS	c. LONG TERM AVRG. VALUE (*if available*) (1) CONCENTRATION	c. LONG TERM AVRG. VALUE (*if available*) (2) MASS	d. NO. OF ANALYSES	a. CONCEN-TRATION	b. MASS	a. LONG TERM AVERAGE VALUE (1) CONCENTRATION	a. LONG TERM AVERAGE VALUE (2) MASS	b. NO. OF ANALYSES
METALS, CYANIDE, AND TOTAL PHENOLS															
1M. Antimony, Total (7440-36-0)	X	X		<0.001	<1.06	--	--	--	--	1	PPM	LB/DAY	--	--	--
2M. Arsenic, Total (7440-38-2)	X	X		<0.02	<22	--	--	--	--	1	PPM	LB/DAY	--	--	--
3M. Beryllium, Total (7440-41-7)	X	X		<0.0002	<0.211	--	--	--	--	1	PPM	LB/DAY	--	--	--
4M. Cadmium, Total (7440-43-9)	X	X		<0.0003	<0.316	--	--	--	--	1	PPM	LB/DAY	--	--	--
5M. Chromium, Total (7440-47-3)	X	X		<0.001	<1.06	--	--	--	--	1	PPM	LB/DAY	--	--	--
6M. Copper, Total (7440-50-8)	X	X		<0.011	<11.6	--	--	--	--	1	PPM	LB/DAY	--	--	--
7M. Lead, Total (7439-92-1)	X	X		<0.001	<1.06	--	--	--	--	1	PPM	LB/DAY	--	--	--
8M. Mercury, Total (7439-97-6)	X	X		<0.0002	<0.211	--	--	--	--	1	PPM	LB/DAY	--	--	--
9M. Nickel, Total (7440-02-0)	X	X		<0.006	<6.32	--	--	--	--	1	PPM	LB/DAY	--	--	--
10M. Selenium, Total (7782-49-2)	X	X		<0.003	<3.16	--	--	--	--	1	PPM	LB/DAY	--	--	--
11M. Silver, Total (7440-22-4)	X	X		<0.0002	<0.211	--	--	--	--	1	PPM	LB/DAY	--	--	--
12M. Thallium, Total (7440-28-0)	X	X		<0.0002	<0.211	--	--	--	--	1	PPM	LB/DAY	--	--	--
13M. Zinc, Total (7440-66-6)	X	X		<0.02	<22	--	--	--	--	1	PPM	LB/DAY	--	--	--
14M. Cyanide, Total (57-12-5)	X	X		<0.01	<11	--	--	--	--	1	PPM	LB/DAY	--	--	--
15M. Phenols, Total **	X	X		<0.01	<11	--	--	--	--	1	PPM	LB/DAY	--	--	--
DIOXIN															
2,3,7,8-Tetra-chlorodibenzo-P-Dioxin (1764-01-6)			X	DESCRIBE RESULTS No Sample											

* Values are based on weighted average of the 2015 measured data for Pond E ash dewatering well points and Pond E contact waters, and data in 2013 VPDES Permit Reissuance Application for Outfall 001/002 (or as otherwise indicated).

** Values are based on Outfall 001/002 data in 2013 VPDES Permit Reissuance Application.

00022276

ALTERNATE Interim Configuration:
Dewatering and Contact Waters*

CONTINUED FROM THE FRONT

1. POLLUTANT AND CAS NUMBER (if available)	2. MARK "X"			3. EFFLUENT							4. UNITS		5. INTAKE (optional)		
	a. TESTING REQUIRED	b. BELIEVED PRESENT	c. BELIEVED ABSENT	a. MAXIMUM DAILY VALUE		b. MAXIMUM 30 DAY VALUE (if available)		c. LONG TERM AVRG. VALUE (if available)		d. NO. OF ANALYSES	a. CONCEN-TRATION	b. MASS	a. LONG TERM AVERAGE VALUE		b. NO. OF ANALYSES
				(1) CONCENTRATION	(2) MASS	(1) CONCENTRATION	(2) MASS	(1) CONCENTRATION	(2) MASS				(1) CONCENTRATION	(2) MASS	
GC/MS FRACTION – VOLATILE COMPOUNDS															
1V. Acrolein (107-02-8)	X	X		<10	<11	--	--	--	--	1	PPB	LB/DAY	--	--	--
2V. Acrylonitrile (107-13-1)	X	X		<1.5	<1.6	--	--	--	--	1	PPB	LB/DAY	--	--	--
3V. Benzene (71-43-2)	X	X		<4.4	<4.7	--	--	--	--	1	PPB	LB/DAY	--	--	--
4V. Bis (Chloromethyl) Ether (542-88-1)				DELISTED 02-4-1981 ANALYSIS NOT REQUIRED FOR THIS PARAMETER											
5V. Bromoform (75-25-2)	X	X		<4.7	<5.0	--	--	--	--	1	PPB	LB/DAY	--	--	--
6V. Carbon Tetrachloride (56-23-5)	X	X		<2.8	<3.0	--	--	--	--	1	PPB	LB/DAY	--	--	--
7V. Chlorobenzene (108-90-7)	X	X		<6	<7	--	--	--	--	1	PPB	LB/DAY	--	--	--
8V. Chlorodibromomethane (124-48-1)	X	X		<3.1	<3.3	--	--	--	--	1	PPB	LB/DAY	--	--	--
9V. Chloroethane (75-00-3) **	X	X		<1.1	<1.2	--	--	--	--	1	PPB	LB/DAY	--	--	--
10V. 2-Chloroethylvinyl Ether (110-75-8) **	X	X		<1.2	<1.3	--	--	--	--	1	PPB	LB/DAY	--	--	--
11V. Chloroform (67-66-3)	X	X		<1.6	<1.7	--	--	--	--	1	PPB	LB/DAY	--	--	--
12V. Dichlorobromomethane (75-27-4)	X	X		<2.2	<2.4	--	--	--	--	1	PPB	LB/DAY	--	--	--
13V. Dichlorodifluoromethane (75-71-8)				DELISTED 01-8-1981 ANALYSIS NOT REQUIRED FOR THIS PARAMETER											
14V. 1,1-Dichloroethane (75-34-3)**	X	X		<4.7	<5.0	--	--	--	--	1	PPB	LB/DAY	--	--	--
15V. 1,2-Dichloroethane (107-06-2)	X	X		<2.8	<3.0	--	--	--	--	1	PPB	LB/DAY	--	--	--
16V. 1,1-Dichloroethylene (75-35-4)	X	X		<2.8	<3.0	--	--	--	--	1	PPB	LB/DAY	--	--	--
17V. 1,2-Dichloropropane (78-87-5)	X	X		<6	<7	--	--	--	--	1	PPB	LB/DAY	--	--	--
18V. 1,3-Dichloropropylene (542-75-6)	X	X		<5.9	<6.3	--	--	--	--	1	PPB	LB/DAY	--	--	--
19V. Ethylbenzene (100-41-4)	X	X		<7.2	<7.6	--	--	--	--	1	PPB	LB/DAY	--	--	--
20V. Methyl Bromide (74-83-9)	X	X		<1.4	<1.5	--	--	--	--	1	PPB	LB/DAY	--	--	--
21V. Methyl Chloride (74-87-3) **	X	X		<1.1	<1.2	--	--	--	--	1	PPB	LB/DAY	--	--	--

 CONTINUE ON PAGE V-5

* Values are based on weighted average of the 2015 measured data for Pond E ash dewatering well points and Pond E contact waters, and data in 2013 VPDES Permit Reissuance Application for Outfall 001/002 (or as otherwise indicated).
** Values are based on Outfall 001/002 data in 2013 VPDES Permit Reissuance Application.

00022277

ALTERNATE Interim Configuration:
Dewatering and Contact Waters*

CONTINUED FROM PAGE V-4

1. POLLUTANT AND CAS NUMBER (if available)	2. MARK "X"			3. EFFLUENT							4. UNITS		5. INTAKE (optional)		
	a. TESTING REQUIRED	b. BELIEVED PRESENT	c. BELIEVED ABSENT	a. MAXIMUM DAILY VALUE		b. MAXIMUM 30 DAY VALUE (if available)		c. LONG TERM AVRG. VALUE (if available)		d. NO. OF ANALYSES	a. CONCEN-TRATION	b. MASS	a. LONG TERM AVERAGE VALUE		b. NO. OF ANALYSES
				(1) CONCENTRATION	(2) MASS	(1) CONCENTRATION	(2) MASS	(1) CONCENTRATION	(2) MASS				(1) CONCENTRATION	(2) MASS	
GC/MS FRACTION – VOLATILE COMPOUNDS (continued)															
22V. Methylene Chloride (75-09-2)	X	X		<2.8	<3.0	--	--	--	--	1	PPB	LB/DAY	--	--	--
23V. 1,1,2,2-Tetrachloroethane (79-34-5)	X	X		<6.9	<7.3	--	--	--	--	1	PPB	LB/DAY	--	--	--
24V. Tetrachloro-ethylene (127-18-4)	X	X		<4.1	<4.4	--	--	--	--	1	PPB	LB/DAY	--	--	--
25V. Toluene (108-88-3)	X	X		<6	<7	--	--	--	--	1	PPB	LB/DAY	--	--	--
26V. 1,2-Trans-Dichloroethylene (156-60-5)	X	X		<1.6	<1.7	--	--	--	--	1	PPB	LB/DAY	--	--	--
27V. 1,1,1-Trichloro-ethane (71-55-6)**	X	X		<3.8	<4.1	--	--	--	--	1	PPB	LB/DAY	--	--	--
28V. 1,1,2-Trichloro-ethane (79-00-5)	X	X		<5	<6	--	--	--	--	1	PPB	LB/DAY	--	--	--
29V Trichloro-ethylene (79-01-6)	X	X		<1.9	<2.1	--	--	--	--	1	PPB	LB/DAY	--	--	--
30V. Trichloro-fluoromethane (75-69-4)				DELISTED 01-8-1981 ANALYSIS NOT REQUIRED FOR THIS PARAMETER											
31V. Vinyl Chloride (75-01-4)	X	X		<1.8	<1.9	--	--	--	--	1	PPB	LB/DAY	--	--	--
GC/MS FRACTION – ACID COMPOUNDS															
1A. 2-Chlorophenol (95-57-8)	X	X		<10	<11	--	--	--	--	1	PPB	LB/DAY	--	--	--
2A. 2,4-Dichloro-phenol (120-83-2)	X	X		<10	<11	--	--	--	--	1	PPB	LB/DAY	--	--	--
3A. 2,4-Dimethyl-phenol (105-67-9)	X	X		<10	<11	--	--	--	--	1	PPB	LB/DAY	--	--	--
4A. 4,6-Dinitro-O-Cresol (534-52-1)	X	X		<50	<53	--	--	--	--	1	PPB	LB/DAY	--	--	--
5A. 2,4-Dinitro-phenol (51-28-5)	X	X		<10	<11	--	--	--	--	1	PPB	LB/DAY	--	--	--
6A. 2-Nitrophenol (88-75-5)**	X	X		<10	<11	--	--	--	--	1	PPB	LB/DAY	--	--	--
7A. 4-Nitrophenol (100-02-7)**	X	X		<50	<53	--	--	--	--	1	PPB	LB/DAY	--	--	--
8A. P-Chloro-M-Cresol (59-50-7)**	X	X		<10	<11	--	--	--	--	1	PPB	LB/DAY	--	--	--
9A. Pentachloro-phenol (87-86-5)	X	X		<50	<53	--	--	--	--	1	PPB	LB/DAY	--	--	--
10A. Phenol (108-95-2)	X	X		<10	<11	--	--	--	--	1	PPB	LB/DAY	--	--	--
11A. 2,4,6-Trichloro-phenol (88-05-2)	X	X		<10	<11	--	--	--	--	1	PPB	LB/DAY	--	--	--

* Values are based on weighted average of the 2015 measured data for Pond E ash dewatering well points and Pond E contact waters, and data in 2013 VPDES Permit Reissuance Application for Outfall 001/002 (or as otherwise indicated).
** Values are based on Outfall 001/002 data in 2013 VPDES Permit Reissuance Application.

00022278

ALTERNATE Interim Configuration:
Dewatering and Contact Waters*

CONTINUED FROM THE FRONT

1. POLLUTANT AND CAS NUMBER (if available)	2. MARK "X"			3. EFFLUENT							4. UNITS		5. INTAKE (optional)		
	a. TESTING REQUIRED	b. BELIEVED PRESENT	c. BELIEVED ABSENT	a. MAXIMUM DAILY VALUE		b. MAXIMUM 30 DAY VALUE (if available)		c. LONG TERM AVRG. VALUE (if available)		d. NO. OF ANALYSES	a. CONCEN-TRATION	b. MASS	a. LONG TERM AVERAGE VALUE		b. NO. OF ANALYSES
				(1) CONCENTRATION	(2) MASS	(1) CONCENTRATION	(2) MASS	(1) CONCENTRATION	(2) MASS				(1) CONCENTRATION	(2) MASS	
GC/MS FRACTION – BASE/NEUTRAL COMPOUNDS															
1B. Acenaphthene (83-32-9)	X	X		<10	<11	--	--	--	--	1	PPB	LB/DAY	--	--	--
2B. Acenaphtylene (208-96-8)**	X	X		<10	<11	--	--	--	--	1	PPB	LB/DAY	--	--	--
3B. Anthracene (120-12-7)	X	X		<10	<11	--	--	--	--	1	PPB	LB/DAY	--	--	--
4B. Benzidine (92-87-5)	X	X		<6.5	<6.9	--	--	--	--	1	PPB	LB/DAY	--	--	--
5B. Benzo (a) Anthracene (56-55-3)	X	X		<10	<11	--	--	--	--	1	PPB	LB/DAY	--	--	--
6B. Benzo (a) Pyrene (50-32-8)	X	X		<10	<11	--	--	--	--	1	PPB	LB/DAY	--	--	--
7B. 3,4-Benzo-fluoranthene (205-99-2)	X	X		<10	<11	--	--	--	--	1	PPB	LB/DAY	--	--	--
8B. Benzo (ghi) Perylene (191-24-2)**	X	X		<10	<11	--	--	--	--	1	PPB	LB/DAY	--	--	--
9B. Benzo (k) Fluoranthene (207-08-9)	X	X		<10	<11	--	--	--	--	1	PPB	LB/DAY	--	--	--
10B. Bis (2-Chloro-ethoxy) Methane (111-91-1)**	X	X		<10	<11	--	--	--	--	1	PPB	LB/DAY	--	--	--
11B. Bis (2-Chloro-ethyl) Ether (111-44-4)	X	X		<10	<11	--	--	--	--	1	PPB	LB/DAY	--	--	--
12B. Bis (2-Chloroisopropyl) Ether (102-80-1)	X	X		<10	<11	--	--	--	--	1	PPB	LB/DAY	--	--	--
13B. Bis (2-Ethyl-hexyl) Phthalate (117-81-7)	X	X		<10	<11	--	--	--	--	1	PPB	LB/DAY	--	--	--
14B. 4-Bromophenyl Phenyl Ether (101-55-3)**	X	X		<10	<11	--	--	--	--	1	PPB	LB/DAY	--	--	--
15B. Butyl Benzyl Phthalate (85-68-7)	X	X		<10	<11	--	--	--	--	1	PPB	LB/DAY	--	--	--
16B. 2-Chloro-naphthalene (91-58-7)	X	X		<10	<11	--	--	--	--	1	PPB	LB/DAY	--	--	--
17B. 4-Chloro-phenyl Phenyl Ether (7005-72-3)**	X	X		<10	<11	--	--	--	--	1	PPB	LB/DAY	--	--	--
18B. Chrysene (218-01-9)	X	X		<10	<11	--	--	--	--	1	PPB	LB/DAY	--	--	--
19B. Dibenzo (a,h) Anthracene (53-70-3)	X	X		<10	<11	--	--	--	--	1	PPB	LB/DAY	--	--	--
20B. 1,2-Dichloro-benzene (95-50-1)	X	X		<5	<6	--	--	--	--	1	PPB	LB/DAY	--	--	--
21B. 1,3-Di-chloro-benzene (541-73-1)	X	X		<5	<6	--	--	--	--	1	PPB	LB/DAY	--	--	--

 CONTINUE ON PAGE V-7

* Values are based on weighted average of the 2015 measured data for Pond E ash dewatering well points and Pond E contact waters, and data in 2013 VPDES Permit Reissuance Application for Outfall 001/002 (or as otherwise indicated).

** Values are based on Outfall 001/002 data in 2013 VPDES Permit Reissuance Application.

00022279

ALTERNATE Interim Configuration:
Dewatering and Contact Waters*

CONTINUED FROM PAGE V-6

1. POLLUTANT AND CAS NUMBER (*if available*)	2. MARK "X"			3. EFFLUENT							4. UNITS		5. INTAKE (*optional*)		
	a. TESTING REQUIRED	b. BELIEVED PRESENT	c. BELIEVED ABSENT	a. MAXIMUM DAILY VALUE		b. MAXIMUM 30 DAY VALUE (*if available*)		c. LONG TERM AVRG. VALUE (*if available*)		d. NO. OF ANALYSES	a. CONCEN-TRATION	b. MASS	a. LONG TERM AVERAGE VALUE		b. NO. OF ANALYSES
				(1) CONCENTRATION	(2) MASS	(1) CONCENTRATION	(2) MASS	(1) CONCENTRATION	(2) MASS				(1) CONCENTRATION	(2) MASS	
GC/MS FRACTION – BASE/NEUTRAL COMPOUNDS (*continued*)															
22B. 1,4-Dichloro-benzene (106-46-7)	X	X		<5	<6	--	--	--	--	1	PPB	LB/DAY	--	--	--
23B. 3,3-Dichloro-benzidine (91-94-1)	X	X		<20	<22	--	--	--	--	1	PPB	LB/DAY	--	--	--
24B. Diethyl Phthalate (84-66-2)	X	X		<10	<11	--	--	--	--	1	PPB	LB/DAY	--	--	--
25B. Dimethyl Phthalate (131 -11-3)	X	X		<10	<11	--	--	--	--	1	PPB	LB/DAY	--	--	--
26B. Di-N-Butyl Phthalate (84-74-2)	X	X		<10	<11	--	--	--	--	1	PPB	LB/DAY	--	--	--
27B. 2,4-Dinitro-toluene (121-14-2)	X	X		<10	<11	--	--	--	--	1	PPB	LB/DAY	--	--	--
28B. 2,6-Dinitro-** toluene (606-20-2)	X	X		<10	<11	--	--	--	--	1	PPB	LB/DAY	--	--	--
29B. Di-N-Octyl ** Phthalate (117-84-0)	X	X		<10	<11	--	--	--	--	1	PPB	LB/DAY	--	--	--
30B. 1,2-Diphenyl-hydrazine (*as Azo-benzene*) (122-66-7)	X	X		<100	<106	--	--	--	--	1	PPB	LB/DAY	--	--	--
31B. Fluoranthene (206-44-0)	X	X		<10	<11	--	--	--	--	1	PPB	LB/DAY	--	--	--
32B. Fluorene (86-73-7)	X	X		<10	<11	--	--	--	--	1	PPB	LB/DAY	--	--	--
33B. Hexachloro-benzene (118-74-1)	X	X		<10	<11	--	--	--	--	1	PPB	LB/DAY	--	--	--
34B. Hexachloro-butadiene (87-68-3)	X	X		<10	<11	--	--	--	--	1	PPB	LB/DAY	--	--	--
35B. Hexachloro-cyclopentadiene (77-47-4)	X	X		<10	<11	--	--	--	--	1	PPB	LB/DAY	--	--	--
36B Hexachloro-ethane (67-72-1)	X	X		<10	<11	--	--	--	--	1	PPB	LB/DAY	--	--	--
37B. Indeno (*1,2,3-cd*) Pyrene (193-39-5)	X	X		<10	<11	--	--	--	--	1	PPB	LB/DAY	--	--	--
38B. Isophorone (78-59-1)	X	X		<10	<11	--	--	--	--	1	PPB	LB/DAY	--	--	--
39B. Naphthalene (91-20-3)**	X	X		<10	<11	--	--	--	--	1	PPB	LB/DAY	--	--	--
40B. Nitrobenzene (98-95-3)	X	X		<10	<11	--	--	--	--	1	PPB	LB/DAY	--	--	--
41B. N-Nitro-sodimethylamine (62-75-9)	X	X		<10	<11	--	--	--	--	1	PPB	LB/DAY	--	--	--
42B. N-Nitrosodi-N-Propylamine (621-64-7)	X	X		<10	<11	--	--	--	--	1	PPB	LB/DAY	--	--	--

CONTINUE ON REVERSE

* Values are based on weighted average of the 2015 measured data for Pond E ash dewatering well points and Pond E contact waters, and data in 2013 VPDES Permit Reissuance Application for Outfall 001/002 (or as otherwise indicated).

** Values are based on Outfall 001/002 data in 2013 VPDES Permit Reissuance Application.

00022280

CONTINUED FROM THE FRONT

1. POLLUTANT AND CAS NUMBER (if available)	2. MARK "X"			3. EFFLUENT							4. UNITS		5. INTAKE (optional)		
	a. TESTING REQUIRED	b. BELIEVED PRESENT	c. BELIEVED ABSENT	a. MAXIMUM DAILY VALUE		b. MAXIMUM 30 DAY VALUE (if available)		c. LONG TERM AVRG. VALUE (if available)		d. NO. OF ANALYSES	a. CONCEN-TRATION	b. MASS	a. LONG TERM AVERAGE VALUE		b. NO. OF ANALYSES
				(1) CONCENTRATION	(2) MASS	(1) CONCENTRATION	(2) MASS	(1) CONCENTRATION	(2) MASS				(1) CONCENTRATION	(2) MASS	
GC/MS FRACTION – BASE/NEUTRAL COMPOUNDS (continued)															
43B. N-Nitro-sodiphenylamine (86-30-6)	X	X		<10	<11	--	--	--	--	1	PPB	LB/DAY	--	--	--
44B. Phenanthrene (85-01-8) **	X	X		<10	<11	--	--	--	--	1	PPB	LB/DAY	--	--	--
45B. Pyrene (129-00-0)	X	X		<10	<11	--	--	--	--	1	PPB	LB/DAY	--	--	--
46B. 1,2,4-Tri-chlorobenzene (120-82-1)	X	X		<10	<11	--	--	--	--	1	PPB	LB/DAY	--	--	--
GC/MS FRACTION – PESTICIDES															
1P. Aldrin (309-00-2)	X	X		<0.05	<0.06	--	--	--	--	1	PPB	LB/DAY	--	--	--
2P. α-BHC (319-84-6)	X	X		<0.05	<0.06	--	--	--	--	1	PPB	LB/DAY	--	--	--
3P. β-BHC (319-85-7)	X	X		<0.05	<0.06	--	--	--	--	1	PPB	LB/DAY	--	--	--
4P. γ-BHC (58-89-9)	X	X		<0.05	<0.06	--	--	--	--	1	PPB	LB/DAY	--	--	--
5P. δ-BHC (319-86-8)	X	X		<0.05	<0.06	--	--	--	--	1	PPB	LB/DAY	--	--	--
6P. Chlordane (57-74-9)	X	X		<0.2	<0.3	--	--	--	--	1	PPB	LB/DAY	--	--	--
7P. 4,4'-DDT (50-29-3)	X	X		<0.1	<0.2	--	--	--	--	1	PPB	LB/DAY	--	--	--
8P. 4,4'-DDE (72-55-9)	X	X		<0.1	<0.2	--	--	--	--	1	PPB	LB/DAY	--	--	--
9P. 4,4'-DDD (72-54-8)	X	X		<0.1	<0.2	--	--	--	--	1	PPB	LB/DAY	--	--	--
10P. Dieldrin (60-57-1)	X	X		<0.1	<0.2	--	--	--	--	1	PPB	LB/DAY	--	--	--
11P. α-Enosulfan (115-29-7)	X	X		<0.1	<0.2	--	--	--	--	1	PPB	LB/DAY	--	--	--
12P. β-Endosulfan (115-29-7)	X	X		<0.1	<0.2	--	--	--	--	1	PPB	LB/DAY	--	--	--
13P. Endosulfan Sulfate (1031-07-8)	X	X		<0.1	<0.2	--	--	--	--	1	PPB	LB/DAY	--	--	--
14P. Endrin (72-20-8)	X	X		<0.1	<0.2	--	--	--	--	1	PPB	LB/DAY	--	--	--
15P. Endrin Aldehyde (7421-93-4)	X	X		<0.1	<0.2	--	--	--	--	1	PPB	LB/DAY	--	--	--
16P. Heptachlor (76-44-8)	X	X		<0.05	<0.06	--	--	--	--	1	PPB	LB/DAY	--	--	--

CONTINUE ON PAGE V-9

* Values are based on weighted average of the 2015 measured data for Pond E ash dewatering well points and Pond E contact waters, and data in 2013 VPDES Permit Reissuance Application for Outfall 001/002 (or as otherwise indicated).

** Values are based on Outfall 001/002 data in 2013 VPDES Permit Reissuance Application.

00022281

EPA I.D. NUMBER (*copy from Item 1 of Form 1*)	OUTFALL NUMBER
110000340774	001/002

ALTERNATE Interim Configuration: Dewatering and Contact Waters*

CONTINUED FROM PAGE V-8

1. POLLUTANT AND CAS NUMBER (*if available*)	2. MARK "X"			3. EFFLUENT							4. UNITS		5. INTAKE (*optional*)		
	a. TESTING REQUIRED	b. BELIEVED PRESENT	c. BELIEVED ABSENT	a. MAXIMUM DAILY VALUE		b. MAXIMUM 30 DAY VALUE (*if available*)		c. LONG TERM AVRG. VALUE (*if available*)		d. NO. OF ANALYSES	a. CONCEN-TRATION	b. MASS	a. LONG TERM AVERAGE VALUE		b. NO. OF ANALYSES
				(1) CONCENTRATION	(2) MASS	(1) CONCENTRATION	(2) MASS	(1) CONCENTRATION	(2) MASS				(1) CONCENTRATION	(2) MASS	
GC/MS FRACTION – PESTICIDES (*continued*)															
17P. Heptachlor Epoxide (1024-57-3)	X	X		<0.1	<0.2	--	--	--	--	1	PPB	LB/DAY	--	--	--
18P. PCB-1242 (53469-21-9)**	X	X		<1	<2	--	--	--	--	1	PPB	LB/DAY	--	--	--
19P. PCB-1254 (11097-69-1)**	X	X		<1	<2	--	--	--	--	1	PPB	LB/DAY	--	--	--
20P. PCB-1221 (11104-28-2)**	X	X		<1	<2	--	--	--	--	1	PPB	LB/DAY	--	--	--
21P. PCB-1232 (11141-16-5)**	X	X		<1	<2	--	--	--	--	1	PPB	LB/DAY	--	--	--
22P. PCB-1248 (12672-29-6)**	X	X		<1	<2	--	--	--	--	1	PPB	LB/DAY	--	--	--
23P. PCB-1260 (11096-82-5)**	X	X		<1	<2	--	--	--	--	1	PPB	LB/DAY	--	--	--
24P. PCB-1016 (12674-11-2)**	X	X		<1	<2	--	--	--	--	1	PPB	LB/DAY	--	--	--
25P Toxaphene (8001-35-2)	X	X		<5	<6	--	--	--	--	1	PPB	LB/DAY	--	--	--

* Values are based on weighted average of the 2015 measured data for Pond E ash dewatering well points and Pond E contact waters, and data in 2013 VPDES Permit Reissuance Application for Outfall 001/002 (or as otherwise indicated).

** Values are based on Outfall 001/002 data in 2013 VPDES Permit Reissuance Application.

00022282

gai consultants

gaiconsultants.com | transforming ideas into reality.

VPDES Permit Modification
Conceptual Engineering Report

Virginia Electric and Power Company d/b/a Dominion Virginia Power
Coal Combustion Residuals Pond Closure Project
Possum Point Power Station
Prince William County, Virginia

GAI Project Number: C150132.00, Task 047

August 2015

Dominion

Prepared by: GAI Consultants, Inc.
Richmond Office
4198 Cox Road, Suite 114
Glen Allen, Virginia 23060-3328

Prepared for: Virginia Electric and
Power Company d/b/a Dominion Virginia Power
5000 Dominion Boulevard
Glen Allen, Virginia 23060-3308

VPDES Permit Modification
Conceptual Engineering Report

Virginia Electric and Power Company d/b/a Dominion Virginia Power
Coal Combustion Residuals Pond Closure Project
Possum Point Power Station
Prince William County, Virginia

GAI Project Number: C150132.00, Task 047

August 2015

Prepared for:
Virginia Electric and Power Company d/b/a Dominion Virginia Power
5000 Dominion Boulevard
Glen Allen, Virginia 23060-3308

Prepared by:
GAI Consultants, Inc.
Richmond Office
4198 Cox Road, Suite 114
Glen Allen, Virginia 23060-3328

Report Authors:

John D. DeBarbieri, PE
Senior Project Engineer

Scott C. Quinlan, PE
Senior Engineering Manager

Table of Contents

1.0 Project Overview 1
1.1 Introduction 1
1.2 Project Description 1
1.2.1 Purpose and Need 1
1.2.2 Location and Description of Selected Project Facilities - Pre Construction 2
1.2.2.1 Ash Ponds A, B, and C 2
1.2.2.2 Ash Pond D 2
1.2.2.3 Ash Pond E 3
1.2.2.4 Metals Cleaning Waste Treatment Facility 3
1.2.2.5 Oil Water Treatment Basin 3
1.2.2.6 Potomac River Water 4
1.2.2.7 Low Volume Waste Settling Ponds 4
1.3 Schedule During Construction/Closure Activities 5

2.0 Interim Configuration 5
2.1 Outfall 502 Water 6
2.2 Pond D Comingled Water 7
2.3 Ash Dewatering and Contact Waters 7
2.4 Outfall 501 Water 8

3.0 Final Configuration 8
3.1 Outfall 502 Water 8
3.2 Pond D Passive Underdrainage 8
3.3 Outfall 501 Water 9

4.0 Conceptual Treatment Options 9
4.1 Conceptual Treatment Requirements 9
4.1.1 Chemical Additives 9
4.1.2 Sedimentation 9
4.1.3 Filtration 10
4.1.4 Ion Exchange 10
4.1.5 Packed Bed Biofilters 10
4.2 Mixing/Blending Systems 10

5.0 Recommendations 10

Table 1 Proposed Ponds A, B, C, D, and E Closure Schedule and Proposed Wastewater Average Flow Rates
Table 2 Blended Outfall 502 and Outfall 004
Table 3 Pond D Comingled Water
Table 4 Blended Pond D Comingled Water, Outfall 502, and Outfall 004
Table 5 Blended Pond D Comingled Water and Outfall 001/002
Table 6 Blended Ash Dewatering and Contact Waters
Table 7 Ponds A, B, C, and D Dewatering and Contact Water Estimated Pumping Rates

Table of Contents (Continued)

Table 8 Blended Ash Dewatering Waters, Contact Waters, Outfall 502, and Outfall 004
Table 9 Blended Ash Dewatering, Contact Waters, and Outfall 001/002
Table 10 Chemical Additives List

Drawing C150132.00 - Aerial Outfall Exhibit Station Outfalls and Treatment Facilities
Drawing PP-0-SP-STA-600 Water Flow Balance Line Diagram, Pre-Construction Configuration
Drawing C150132-00-047-00-P-A2-001 Present Conditions (During Construction)
Drawing C150132-00-047-00-P-B2-002 Interim Configuration (During Construction)
Drawing C150132-00-047-00-P-A2-003 Final Configuration (Post-Construction)

© 2015 GAI Consultants, Inc.

1.0 Project Overview

1.1 Introduction

Virginia Electric and Power Company d/b/a Dominion Virginia Power (Dominion) is in the process of implementing a long-term strategy for closure of its existing coal combustion residuals (CCR) (ash) ponds at Possum Point Power Station (Station), an 1,845 megawatt natural gas and oil fired (previously coal-fired) steam electric generating station near Dumfries, Prince William County, Virginia (VA).

1.2 Project Description

Dominion is currently working to close five existing ash ponds at the Station. The five ponds are designated A, B, C, D and E and their locations are shown on Drawing C150132.00 - Aerial Outfall Exhibit, Station Outfalls and Treatment Facilities. Ponds A, B, and C were originally three contiguous ponds that have been inactive since the 1960s. All five ponds are scheduled for closure by April 2018 in accordance with the relevant provisions of the United States Environmental Protection Agency's CCR rule, which was published on April 17, 2015, and codified in 40 Code of Federal Regulations (CFR) Part 257, Subpart D.

Ash Pond E has been decanted, dewatered, and is presently being dredged, all in accordance with applicable state and local requirements. The dredged ash materials and contact/pore waters are being relocated to Ash Pond D for storage. Ash Pond E can then be clean-closed and regraded. Ash Ponds A, B, and C are in the process of being dewatered, dredged, and clean-closed. The dredged ash materials and contact/pore waters are in the process of being relocated to Ash Pond D for storage. Following transfer of the dredged ash materials and associated waters from A, B, C and E, Ash Pond D will be decanted, regraded, capped, and closed. A single regulated solid waste facility for the Station's ash will be maintained at closed Ash Pond D subject to all applicable state closure and post-closure care requirements; the construction drawings, specifications, and solid waste permitting application package for this facility will be provided to VA Department of Environmental Quality (DEQ) under separate cover.

1.2.1 Purpose and Need

The process leading to closure of Ponds A, B, C, D, and E will involve management of the following water/wastewater types:

- ***Pond E Decant Water***, which refers to the surface water stored in Pond E that was discharged into Quantico Creek in May 2015 in compliance with the Station's existing VA Pollutant Discharge Elimination System (VPDES) permit by sequentially removing stop logs at the outfall structure (to Outfall 005). The Decant Water was discharged to begin dredging of ash in Pond E.
- ***Ash Dewatering Water*** from Ponds A, B, C, D and E. Dewatering Water refers to the water that is produced from the dewatering of the ash in order to stabilize the ash and allow for its removal by mechanical dredging (Ponds A, B, C, and E) or its grading for the construction of a cap system (Pond D). Dewatering Water is currently being accumulated onsite by the excavation of trenches to drain the ash and by the installation of wells that are being used to pump water out of the ash. Dewatering Water is presently being stored in Ash Pond D as allowed under the existing VPDES permit and is not being discharged.

- ***Contact Water*** from Ponds A, B, C, D and E. Contact Water refers to stormwater that comes in contact with ash. Contact Water must be removed from the working areas to close the ponds.
- ***Outfall 501 Water*** from the Station's metal cleaning basins. Outfall 501 Water is a permitted internal outfall that was previously discharged into Pond E.
- ***Outfall 502 Water*** from the Station's oily water treatment basin. Outfall 502 Water is a permitted internal outfall that was previously discharged into Pond E.
- ***Pond D Comingled Water***, which refers to the above listed wastewaters that have accumulated or been pumped into Pond D. Pond D Comingled Water must be drained from Pond D to allow for the closure of Pond D. Pond D comingled water includes approximately 137 million gallons of Contact Water (previously permitted for discharge through Pond E) that has accumulated in Pond D as of August 4, 2015.
- ***Pond D Passive Underdrainage***, which refers to future subsurface waters draining from closed and capped Pond D soil/ash below the impermeable liner. These waters are expected to reduce over time and eventually stop flowing.

The purpose of this document is to identify the planned treatment, mixing/blending, and handling/discharge options for the above water/wastewaters. This document is intended to accompany the Station's Application to the VA DEQ for Modification of VPDES Permit No. VA0002071. The Permit Modification is required to address the proper management and discharge of waters/wastewaters during construction and post-construction (the configurations of the related flow paths are herein referred to as "Interim Configuration" and "Final Configuration", respectively).

1.2.2 Location and Description of Selected Project Facilities

Selected facilities that are or are planned to be affected by the project are discussed. Locations and descriptions of the facilities are based on their respective pre-construction condition. Refer to Drawing PP-0-SP-STA-600, Water Flow Balance Line Diagram, Pre-Construction Configuration, for the Station's facilities, flow streams, and outfalls as presently permitted.

1.2.2.1 Ash Ponds A, B, and C

Ash Ponds A, B, and C were actively utilized during the period from 1955 through the early 1960s. Subsequently, the ponds have been reclaimed by natural vegetative cover. The drainage area containing the inactive ash ponds is associated with a stormwater outfall (referred to as Outfall S104).

Dominion plans to clean-close Ponds A, B, and C by removing and relocating the ash to Pond D. During closure construction activities at Ponds A, B, and C, Dominion proposes to direct all Contact Water and Ash Dewatering Water from Ponds A, B, and C to Pond D.

1.2.2.2 Ash Pond D

Ash Pond D is the largest ash pond onsite and was constructed to provide a location for final disposal of ash produced by the Station during the period of coal-fired generation of electricity. Prior to Pond Closure activities in 2015, a permanent pool of water was roughly maintained at 50-feet below the top of the dam. Ash Pond D presently accepts stormwater runoff from the surrounding watershed. The outfall from Ash Pond D is configured and authorized under the VPDES permit to discharge to Ash Pond E.

Dominion is presently utilizing Ash Pond D for storage of ash and Ash Dewatering Water Contact Water, Outfall 501 Water, and Outfall 502 Water, as allowed by the VPDES permit. The combination of these waters is referred herein as "Pond D Comingled Water".

1.2.2.3 Ash Pond E

Ash Pond E was historically the day-to-day ash pond onsite. After ash operations ceased, it served as the final treatment system for the remainder of the various stormwater and process wastewaters generated by the Station. Ash Pond E discharges via a riser structure to permitted Outfall 005. Permitted Outfall 005 discharges to an unnamed tributary of Quantico Creek. Ash Pond E is permitted to accept, treat, and discharge the following wastewater streams from the Station:

- stormwater runoff;
- Oil Water Treatment Basin effluent from Internal Outfall 502;
- Metals Cleaning Waste Treatment Facility effluent from Internal Outfall 501;
- raw Potomac River water; and
- Pond D decanted water.

Ash Pond E has been decanted as of May 2015, prior to beginning dredging activities. The decanted waters were discharged in compliance with the VPDES permit through Outfall 005 at the riser structure by removing stop logs. There have been no discharges from Pond E since the pond was decanted.

1.2.2.4 Metals Cleaning Waste Treatment Facility

The Metals Cleaning Waste Treatment Facility consists of two lined ponds (referred to as the north and south ponds) in series that accept and treat wastewaters generated by the cleaning of the Station's boiler and other metallic equipment. The treated effluent from the Metals Cleaning Waste Treatment Facility (i.e., Outfall 501 Water) was historically discharged from the south pond to Pond E. In addition to stormwater that contributes to the Metals Cleaning Waste Treatment Facility, the ponds are presently permitted to batch treat intermittent wastewater streams generated from cleaning/flushing operations at the following facilities:

- boiler;
- preheater;
- economizer;
- precipitator; and
- associated piping.

The source of the cleaning/flush waters is raw, untreated river water from the Potomac River.

The wastewaters in the Metals Cleaning Waste Treatment Facility have been treated in 2015 and discharged to decanted Ash Pond E for collection. This operation was performed prior to dredging operations at Ash Pond E. These Outfall 501 Waters were subsequently pumped to Ash Pond D for storage. Dominion does not anticipate discharging wastewater out of the Metals Cleaning Waste Treatment Facility in the immediate future.

1.2.2.5 Oil Water Treatment Basin

The Oil Water Treatment Basin is an open pond north of the oil storage tanks and containment areas along the Potomac River. The effluent from the Oil Water Treatment Basin (Internal Outfall 502) was historically pumped via Lift Station No. 4 or No. 5 to Pond E. In addition to stormwater that contributes to the Oil Water Treatment Basin, the ponds are presently permitted to batch treat wastewater from the following facilities:

- Unit 5 seal oil system;
- low head circulation water filter;
- Unit 5 floor drains;
- Unit 5 boiler blowdown;
- Unit 5 "hotwell" blowdown;
- Unit 5 flash tank drain;
- Unit 5 evaporator blowdown;
- Unit 5 flash evaporator condensate dump;
- Unit 5 tank drains;
- auxiliary boiler blowdown;
- Unit 6 cooling tower drift; and
- turbine "false start" drains.

In addition to being routed to Ash Pond E through Outfall 502 the Oil Water Treatment Basin effluent (Internal Outfall 502) has on several occasions been temporarily diverted to the Low Volume Waste Settling Ponds and ultimately Outfall 004 with approval from DEQ. Dominion has requested, through a Notice of Planned Changes, DEQ concurrence that a similar rerouting may be performed under the Station's existing VPDES permit and we are seeking to make this a permanent configuration via this application for permit modification.

1.2.2.6 Potomac River Water

The existing VPDES permit conditions allow for the use of raw, untreated Potomac River Water to be pumped to Ash Pond E to control pH and other constituents. The associated pump and piping systems were formerly used for bottom ash sluicing operations.

1.2.2.7 Low Volume Waste Settling Ponds

The Low Volume Waste Settling Ponds consist of multiple cells with berms and overflows. The effluent from the Low Volume Waste Settling Ponds is discharged through Outfall 004 to the Potomac River. In addition to stormwater and yard drainage that contributes to the Low Volume Waste Settling Ponds, the ponds are presently permitted to treat and discharge the wastewater streams generated from the following facilities:

- Units 5 and 6 cooling tower drift;
- sand filter backwash;
- "quench" water;
- boiler blowdown;
- water treatment sumps/drains;
- turbine washwater;
- "false start" drains;
- reverse osmosis and "e-cell" blowdown;
- demineralized water;
- clarifier drains;
- neutralization pi;,
- low volume wastewater;
- Units 1, 2, 3, and 4 floor drains;
- Unit 4 distilled water;

- condenser drains and floor drains; and
- "EDR" blowdown.

Oil Water Treatment Basin effluent (Internal Outfall 502) has been permitted in the past to be diverted to the Low Volume Waste Settling Ponds and ultimately Outfall 004 on a temporary basis. Through this application addendum Dominion is seeking to make this a permanent routing configuration.

1.3 Schedule During Construction/Closure Activities

The Station is permitted under VPDES permit No. VA0002071 to discharge wastewaters from Ponds D and E through Outfall 005 to an unnamed tributary of Quantico Creek. However, at present there is currently no discharge from Outfall 005. All flows that were previously collected in Pond E are now being collected and stored in Pond D. Additionally, Pond D is being utilized to collect Ash Dewatering Water and Contact Water from Ponds A, B, C, and E. There is currently no discharge from Pond D. Refer to Drawing C150132-00-047-00-P-A2-001, Present Conditions (During Construction).

Ash Ponds A, B, C, and E will be clean-closed through the removal of ash in the ponds. To accomplish this, ash is presently being mechanically dredged from Pond E to Pond D. These operations began on June 15, 2015. Ash from Pond E is being stockpiled in the upper/northern portion of Pond D and is physically separated from the free water in Pond D. Ash from Ponds A, B, and C is scheduled to be mechanically dredged to Pond D beginning August 2015.

Ash Pond D will be closed as an inactive CCR surface impoundment by leaving the CCR in place and constructing a cap over the ash surface in accordance with 40 CFR §257.100.b.1. The ash in Pond D will be dewatered, stabilized and graded. Fill will then be placed on the ash surface to create a slope that will drain. The fill will be placed to produce a suitable platform on which to construct a geosynthetic liner and soil cap. This will limit infiltration into the ash.

In order to close the ponds as inactive surface impoundments in accordance with the new CCR regulations (40 CFR §257.100), the surface impoundments must be closed no later than April 17, 2018. Dominion has developed the schedule provided in Table 1 to close the ponds as inactive facilities.

2.0 Interim Configuration

During the active construction phase (i.e., "Interim Configuration") of the pond closures project, the following water and wastewaters will need to be addressed:

- Outfall 502 Water;
- Pond D Comingled Water;
- Ash Dewatering and Contact Waters; and
- Outfall 501 Water.

Dominion would like to have flexibility in the management of wastewaters generated throughout the closure process. Consequently, we are providing a number of options for the handling and discharge of the wastewaters that will be generated during the closure process associated with each pond.

The water and wastewater flow streams and discharge points during the closure process are presented schematically on Drawing C150132-00-047-00-P-A2-002, Interim Configuration (During Construction), subject to the requested permit modification. This configuration assumes that the VPDES permit is modified by January 1, 2016, which is the date that Dominion must begin dewatering of Pond D in order to achieve closure by the desired deadline. However, if the permit modification is delayed beyond January 1, 2016, then the Station plans to continue with Pond Closure activities, but the water and wastewater flow streams (i.e., Pond D Comingled Water, Ash Dewatering Water, and Contact Water)

will be treated with a filtering system to remove CCR (ash) solids and held in reclaimed Pond E for treatment and discharge at a later date. The water and wastewater flow streams are further described in the following sections.

2.1 Outfall 502 Water

As part of the closure process, Dominion plans to divert the Oil Water Treatment Basin (Outfall 502 Water) to the Station's existing Low Volume Waste Settling Ponds (Outfall 004). The proposed Oil Water diversion will facilitate the Station's closure of the Ash Ponds. Temporary routing of Oil Water Treatment Basin to the Low Volume Waste Settling Ponds (Outfall 004) has been permitted in the past by the DEQ on an interim basis, and Dominion has requested permission to make this same rerouting under the existing permit via a Notice of Planned Changes submitted to DEQ in July 2015.

Both Outfall 502 and Outfall 004 are currently permitted as a low volume wastewater under the existing Steam Electric Effluent Guidelines (40 CFR Part 423) and the characteristics of the two waters are similar. To demonstrate this similarity, an analysis of the water quality from the Oil Water Treatment Basin was performed and the results are tabulated in Table 2. Table 2 also includes, for comparison purposes, the water quality data for Outfall 004 as reported in our 2013 Permit Reissuance Application, and a projected presumed quality of the combined discharge. The projected presumed quality of the combined discharge is estimated using the following mass balance calculations, as applicable:

$$Combined\ Discharge\ Concentration = \left[\frac{mg}{L}\right] = \frac{\mathrm{Q}_{004} \times \mathrm{Concentration}_{004} + \mathrm{Q}_{502} \times \mathrm{Concentration}_{502}}{\mathrm{Q}_{004} + \mathrm{Q}_{502}}$$

Where

Q_{004} = Long term average flow[1] at Outfall 004 = 2.02-MGD

Q_{502} = 30-day maximum flow[2] at Outfall 502 = 0.567-MGD

$\mathrm{Concentration}_{004}$ = Reported concentration[1] at Outfall 004 = $\left[\frac{mg}{L}\right]$

$\mathrm{Concentration}_{502}$ = Measured concentration[2] at Outfall 502 = $\left[\frac{mg}{L}\right]$

$$Combined\ Discharge\ pH = [S.U.] = -\log\left(\frac{\mathrm{Q}_{004} \times 10^{-\mathrm{pH}_{004}} + \mathrm{Q}_{502} \times 10^{-\mathrm{pH}_{502}}}{\mathrm{Q}_{004} + \mathrm{Q}_{502}}\right)$$

Where

pH_{004} = Reported pH[1] at Outfall 004 = $[S.U.]$

pH_{502} = Measured pH[2] at Outfall 502 = $[S.U.]$

The combined discharge concentration formula above takes into account the constituent level as well as the volumetric flow rate of each of the discharges, respectively, i.e., Outfall 502 and Outfall 004 waters as a weighted average. The combined pH concentration formula above similarly takes into account the pH as well as the volumetric flow rate of each of the discharges, respectively, as a weighted average. Please note that the latter equation is a conservative estimate that does not consider the complexities of other factors in the discharges such as alkalinity, hardness, etc. that may

---

1 Per 2013 VPDES Permit Reissuance Application.

2 Per test results on May 7, 2015 sample at Oil Water Treatment Basin.

provide additional buffering capacity, i.e., resistance to changes in pH. These analyses demonstrate that the combined wastewater characteristics are consistent with that permitted for Outfall 004 under the existing permit.

2.2 Pond D Comingled Water

During the Interim Configuration Phase of the pond closure project, Pond D receives and stores Ash and Ash Dewatering Water and Contact Water from Ponds A, B, C, and E, as well as Outfall 501 Water. Pond D has recently received Outfall 502 Water, as well. These comingled waters will be given time to blend and allow for settling of suspended solids. In order to allow for closure of Pond D it will be necessary to first remove the accumulated Pond D Comingled Water, which will be decanted and ultimately discharged through Outfall 005. Prior to discharge through Outfall 005, Pond D Comingled Water may be transferred, with pre-treatment to remove solids, to the clean-closed Pond E for storage. Following storage in Pond E and/or prior to direct discharge through Outfall 005, Pond D Comingled Water will receive further polishing/treatment, as required, to ensure compliance with the VPDES permit and to protect receiving water quality. This decanting process will precede final dewatering and closure of Ash Pond D. Refer to Table 3 for a comparison of the Outfall 005 data reported in the Station's 2013 Permit Reissuance Application and the measured quality of Ash Pond D Comingled Water.

Dominion would like to have flexibility in the management of wastewaters generated throughout the closure process. Therefore, alternates to the "Interim Configuration" have been evaluated as follows. For alternate discharge to Outfall 004, the projected presumed quality of the blended Pond D Comingled Water, Low Volume Waste Settling Ponds (Outfall 004), and Outfall 502 Water is provided in Table 4. For alternate discharge to Outfall 001/002, the projected presumed quality of the blended Pond D Comingled Water and Outfall 001/002 Water is included in Table 5. An alternate is also considered for the Pond D Comingled Water and includes pretreatment (where required) and discharge to the Prince William County Service Authority (PWCSA) sanitary sewer collection system on Possum Point Road. This alternate is being evaluated separately with the PWCSA.

2.3 Ash Dewatering and Contact Waters

During pond closure activities and dredging of Ash Ponds A, B, C, and E, Ash Dewatering Water, as well as Contact Water will be collected and pumped to Pond D. Stormwater runoff will be regulated under a separate VA Stormwater Management Program (VSMP) Permit and will be diverted around the construction site to limit production of Contact Water. After closure of Ponds A, B, C, and E are completed, the areas will have been completely reclaimed, and stormwater will be non-contact and allowed to flow naturally overland.

During pond closure activities of Ash Pond D, Ash Dewatering Water, as well as Contact Water, will be collected, treated as necessary to ensure compliance with permit limits and to protect receiving water quality, and subsequently discharged to Outfall 005, or alternately, Outfall 001/002 (via the Seal Pit), Outfall 004, or the PWCSA sanitary sewer collection system.

Stormwater runoff will be diverted around the construction site to limit production of Contact Water. After closure of Pond D is completed, the ash will have been completely capped, and stormwater will be non-contact and allowed to flow naturally overland.

Waters from Ponds A, B, C, D, and E during active construction include:

- stormwater exposed to ash (i.e., Contact Water);
- subsurface dewatering via constructed groundwater wells (i.e., Dewatering Water); and
- open pits or trenches in exposed ash material that collect surface and subsurface drainage (i.e., Dewatering Water).

Refer to Table 6 for a comparison of the Outfall 005 data reported in the Station's 2013 Permit Reissuance Application and the projected presumed quality of the blended Ash Dewatering Water and Contact Water (Note the raw quality data is based on Ash Dewatering Water and Contact Water from Ash Pond E). The formulas presented in Section 2.1 are similarly used to project the presumed weighted average of the Ash Dewatering and Contact Waters. The weighted flows are based on a total of the Ash Dewatering Water rates of 333 gallons per minute (gpm) at Pond D and 203 gpm at Ponds A, B, and C, as well as Contact Water rates of 70 gpm at Pond D and 11 gpm Ponds A, B, and C. (Note the calculations for estimating the presumed Ash Dewatering and Contact Water rates are provided in Table 7.)

Dominion would like to have flexibility in the management of wastewaters generated throughout the closure process. Therefore, alternates to the "Interim Configuration" have been evaluated as follows. For alternate discharge to Outfall 004, the projected presumed quality of the blended Ash Dewatering Waters, Contact Waters, Low Volume Waste Settling Ponds (Outfall 004), and Outfall 502 Water is provided in Table 8. For alternate discharge to Outfall 001/002, the projected presumed quality of the blended Ash Dewatering Waters, Contact Waters, and Outfall 001/002 Water is included in Table 9. An alternate is also considered to discharge to the PWCSA sanitary sewer collection system and is being evaluated separately with the PWCSA.

2.4 Outfall 501 Water

As presented in the Present conditions section, the metals cleaning wastewater discharge will continue to be routed through Pond D for additional polishing and settling, as needed, until such time the Pond D is dewatered for closure. At that time the metal washing discharge may receive interim polishing/treatment, as required, to comply with the VPDES permit.

3.0 Final Configuration

During the post-construction phase (i.e., "Final Configuration"), the following water and wastewaters will need to be addressed:

- Outfall 502 Water;
- Pond D Passive Underdrainage; and
- Outfall 501 Water.

The water and wastewaters flow streams and discharge points are presented schematically on Drawing C150132-00-047-00-P-A2-003, Final Configuration, and are further described in the following sections.

3.1 Outfall 502 Water

Post-construction, the Oil Water Treatment Basin effluent (i.e., Outfall 502 Water) will continue to be routed through the Low Volume Waste Ponds and discharged at Outfall 004 as described in Section 2.1 above.

3.2 Pond D Passive Underdrainage

During the closing and capping of Pond D, a subsurface dewatering system (i.e., underdrains) will be installed to remove excess water below the impermeable liner of Pond D. This residual water will be pumped to a treatment system with Outfall 501 Water, and, if required, will be further processed/ treated, as required, to comply with the VPDES permit.

An alternate "Final Configuration" for the Pond D Passive Underdrainage is also considered and includes pretreatment (where required) and discharge to the PWCSA sanitary sewer collection system on Possum Point Road. This alternate is being evaluated separately with the PWCSA.

3.3 Outfall 501 Water

The existing Metals Cleaning Waste Treatment Facility effluent (i.e., Outfall 501 Water) will be discharged to a treatment system with Pond D Passive Underdrainage, and, if required, will be further processed/treated, as required, to comply with the VPDES permit.

An alternate "Final Configuration" for the Outfall 501 Water is also considered and includes pretreatment (where required) and discharge to the PWCSA sanitary sewer collection system on Possum Point Road. This alternate is being evaluated separately with the PWCSA.

4.0 Conceptual Treatment Options

4.1 Conceptual Treatment Requirements

Potential treatment options to be utilized (if required) to comply with the VPDES permit and to protect receiving water quality include, but are not limited to:

- chemical additives;
- sedimentation;
- filtration;
- ion exchange/absorption; and/or
- packed bed biofilters.

4.1.1 Chemical Additives

Chemical additives can reduce the solubility of metals, and may include, but are not limited to, hydrated lime, sodium hydroxide, iron salts, and alum. Chemical additives can react with the dissolved metal directly to reduce its solubility, or indirectly by changing the solubility equilibrium.

Certain insoluble metal compounds do not have sufficient ionic attraction to provide adequate sedimentation. The use of chemical additives is typically required to neutralize the charges of the metal compound complexes and facilitate agglomeration into flocs. The weight of the floc allows for more efficient settling. Hydrated lime, iron salts, alum, and polymers are often utilized to facilitate floc agglomeration.

Chemical additives can also prepare collected sludge for dewatering.

Refer to Table 10 for a listing of potential commercial chemical additives that may be utilized and their purpose. Chemical precipitants, coagulants, flocculants, polymers, and water clarification additives may be injected prior to or at clarification or filtration unit processes to facilitate solids removals. Water clarification solids conditioners may be applied to sludge (i.e., collected solids) at clarification facilities to enhance dewatering for disposal. Dominion will provide DEQ with the final chemical additives proposed; and upon request, the respective Material Safety Data Sheets (MSDSs) for each chemical additive.

4.1.2 Sedimentation

Upon inducing chemical precipitation of dissolved constituents, and for constituents already out of solution, the targeted metals and TSS needs to be physically removed from the wastewater. This can be accomplished by sedimentation/clarification and/or filtration. Sedimentation utilizes a tank or clarifier to allow treated water to flow to the top and be discharged while the targeted metal particles settle to the bottom by gravity. Sludge accumulates in the bottom of the tank or clarifier, and when it collects to a sufficient quantity, it can be removed and

disposed. The use of a mechanical filter press or drying bed reduces the liquid content of the sludge to facilitate disposal.

4.1.3 Filtration

Bag and cartridge filters generally have nominal or absolute TSS capture ratings based on particle size and require change out and disposal of the spent bags and cartridges. Bag and cartridge filters are housed in pressurized vessels.

Media filters require periodic backwashing to keep media from "blinding" as well as preventing "breakthrough." Media can include silica sand, and for multimedia filters an additional top coarse layer of anthracite and/or a bottom fine layer garnet sand may be added. Media filters may be pressurized or function by gravity (via upflow filters or traditional gravity filters).

4.1.4 Ion Exchange

For certain dissolved metals (depending on oxidation state), removal from wastewater cannot be obtained by conventional water treatment technology, but are better facilitated with treatment options such ion exchange and adsorption systems. Both passive and active/pressurized ion exchange media systems are available and use various resins or other media technologies. The media in passive systems is disposed of and replaced when spent. Active systems utilize a regeneration step that retains the media for continued use. Ion exchange technologies can be expected to require pre-treatment of TSS.

4.1.5 Packed Bed Biofilters

Packed bed biofilters are a type of plug flow bioreactor that relies on a specialized mixture of microbes that thrive in an anaerobic environment. The microbes may be attached to activated carbon or silica sand media. The microbes digest/reduce target contaminants or convert their soluble forms to insoluble forms for removal. Periodic backwashing of the media is typically required; although required backwashes are infrequent unless necessitated by high TSS loadings. Packed bed biofilter technologies can be expected to require pre-treatment of TSS.

4.2 Mixing and Blending Systems

Mixing and blending can be provided in an existing or proposed basin or in a manufactured tank. In some cases, smaller flows may be mixed/blended by injection directly into the larger flow stream, especially when it is equipped with an in line static mixer. Mixing and blending systems are useful when combining much poorer quality waters with better quality waters; i.e., to provide a suitable quality for discharge that would otherwise be unacceptable for one or more of the flow streams and to provide some buffering for upsets. Manufactured tanks can be permanent or portable. Generally, manufactured tanks will hold less volume than an existing or proposed basin. Additional weirs, dynamic mixers, or static mixers may be suggested to further facilitate blending.

5.0 Recommendations

GAI anticipates that a treatment system for the "Interim Configuration," i.e., the Ash Dewatering, Contact Waters, Outfall 501 Water and Pond D Comingled Waters, could consist of one or a combination of the following technologies prior to discharge to Outfall 005:

- a clarifier with chemical additives for initial TSS/precipitated metals treatment,
- a bag, cartridge, or media filter system for additional TSS/precipitated metals treatment, and
- polishing of dissolved heavy metals, if necessary, may be provided by either the ion exchange or packed bed biofilter systems.

Alternate "Interim Configurations" for the Ash Dewatering, Contact Waters, Outfall 501 Water and Pond D Comingled Waters include discharge to Outfall 001/002, the Low Volume Waste Settling Ponds (Outfall 004), and/or pretreatment (where required) and discharge to the PWCSA sanitary sewer collection system.

For the "Final Configuration," a treatment system is anticipated for the Outfall 501 Water and the Pond D Passive Underdrainage prior to discharge to Outfall 005. An alternate "Final Configuration" for the Outfall 501 Water and Pond D Passive Underdrainage is also considered and includes pretreatment (where required) and discharge to the PWCSA sanitary sewer collection system.

The "Interim Configuration" and "Final Configuration" routing of the Outfall 502 Water to the Low Volume Waste Settling Ponds (Outfall 004) is presumed to be acceptable as-is since the quality of waters are similar.

TABLES

Table 1

Proposed Ponds A, B, C, D, and E Closure Schedule and Proposed Wastewater Average Flow Rates

No.	Activity	Approximate Start Date	Approximate End Date	Proposed Average Flow Rate (mgd)	Proposed Volume (mg)
1	Mechanically Dredge Ash from Pond E into Pond D	06/015	10/2015	-	-
2	Mechanically Dredge Ash from Ponds A, B, and C into Pond D	07/2015	10/2015	-	-
3[1]	**Decant Pond D Comingled Water to Begin Drying Pond D**	**08/2015**	**10/2015**	**2.53**	**137±**
4	Temporarily discharge Outfall 502 Water to Low Volume Waste Settling Ponds and Outfall 004 (pending Notice of Plan Change to DEQ)	08/2015	03/2016	-	-
5	Grade Ash in North Half of Pond D to Establish Subgrade	11/2015	03/2016	-	-
6	**Discharge Ash Dewatering Water and Contact Water**	**01/2016**	**06/2017[2]**	**0.72**	**107±**
7	**Discharge Outfall 501 Water[3]**	**01/2016**	**Not Applicable**	**1.04**	**3±**
8	**Discharge Outfall 502 Water to Low Volume Waste Settling Ponds and Outfall 004 (pending VPDES permit modification)**	**01/2016**	**Not Applicable**	**0.57**	**-**
9	Ponds A, B, C, and E Soil Amendments and Seeding; Construct Temporary Sediment Basins in Ponds A, B, C, and E for Discharge of Stormwater (pending County Site Plan and VSMP Permit)	03/2016	03/2017	-	-
10	Grade Ash and Import Fill from Borrow to Establish Subgrade (entire Pond D)	03/2016	08/2016	-	-
11	Construct Pond D Cap (geosynthetic liner and two feet of cover soil)	08/2016	06/2017	-	-
12	**Closed Ash Pond D Passive Underdrain[4]**	**06/2017**	**12/2018**	**0.15**	**68±**
13	Construct Storm Water Controls/Channel Linings	07/2017	08/2017	-	-
14	Pond D Soil Amendments and Seeding	09/2017	10/2017	-	-
15	CCR Regulations Closure Deadline For Inactive Surface Impoundments	04/17/2018	04/17/2018	-	-

Notes:

1. Bold text denotes wastewater flows/activities.
2. According to this schedule, Contact Water will no longer be generated after June 2017, when the Pond D cap will be complete. Dewatering Water may continue to be produced after capping of Pond D as needed to aid in the dewatering and stabilization.
3. Each event is estimated at three million gallons over a three-day duration.
4. Estimated duration of flow for passive underdrain system is 18 months.

Table 2
Blended Outfall 502 and Outfall 004

Parameters	Units	Outfall 004		Oil Water Internal Outfall 502	Outfall 004 + Outfall 502
		Presumed Maximum Day	Presumed Long Term Average	502 Discharge 5/7/2015	Presumed Weighted Average
Aluminum, Total	mg/L	< 0.09		0.082	< 0.09
Aluminum, Dissolved	mg/L	< 0.09		< 0.026	< 0.08
Antimony, Total	mg/L	< 0.001		< 0.00033	< 0.001
Antimony, Dissolved	mg/L	< 0.001		< 0.00066	< 0.001
Arsenic, Total	mg/L	< 0.003		< 0.0005	< 0.003
Arsenic, Dissolved	mg/L	< 0.003		< 0.001	< 0.003
Boron, Total	mg/L	0.03		< 0.016	< 0.03
Boron, Dissolved	mg/L			< 0.033	
Barium, Total	mg/L	0.044		0.036	0.043
Barium, Dissolved	mg/L	0.033		0.031	0.033
Beryllium, Total	mg/L	< 0.0002		< 0.0001	< 0.0002
Beryllium, Dissolved	mg/L	< 0.0002		< 0.0001	< 0.0002
Cadmium, Total	mg/L	< 0.0003		< 0.00016	< 0.0003
Cadmium, Dissolved	mg/L	< 0.0003		< 0.00033	< 0.0003
Calcium, Total	mg/L			28	
Calcium, Dissolved	mg/L			28.2	
Chromium, Total	mg/L	< 0.001		< 0.00033	< 0.001
Chromium, Dissolved	mg/L	< 0.001		< 0.00066	< 0.001
Trivalent Chromium, Total	mg/L			< 0.01	
Trivalent Chromium, Dissolved	mg/L			< 0.01	
Hexavalent Chromium, Total	µg/L	< 5		< 0.052	< 4
Hexavalent Chromium, Dissolved	µg/L			< 0.052	
Cobalt, Total	mg/L	< 0.0006		< 0.00083	< 0.0007
Cobalt, Dissolved	mg/L	< 0.0006		< 0.0016	< 0.0009
Copper, Total	mg/L	0.007		0.015	0.009
Copper, Dissolved	mg/L	0.004		0.0073	0.005
Iron, Total	mg/L	7.00		0.69	5.7
Iron, Dissolved	mg/L	0.09		0.093	0.10
Lead, Total	mg/L	< 0.001		< 0.00033	< 0.001
Lead, Dissolved	mg/L	< 0.001		< 0.00066	< 0.001
Lithium, Total	mg/L			< 0.016	
Lithium, Dissolved	mg/L			< 0.033	
Manganese, Total	mg/L	0.04		0.14	0.07
Manganese, Dissolved	mg/L	0.02		0.023	0.03
Magnesium, Total	mg/L	8.36		9.7	8.7
Magnesium, Dissolved	mg/L	8.17		9.6	8.5
Molybdenum, Total	mg/L	0.002		0.0045	0.003

Table 2
Blended Outfall 502 and Outfall 004

Parameters	Units	Outfall 004		Oil Water Internal Outfall 502	Outfall 004 + Outfall 502
		Presumed Maximum Day	Presumed Long Term Average	502 Discharge 5/7/2015	Presumed Weighted Average
Molybdenum, Dissolved	mg/L	0.002		0.0044	0.003
Mercury, Total	mg/L	< 0.0002		< 0.00016	< 0.0002
Mercury, Dissolved	mg/L	< 0.0002		< 0.00016	< 0.0002
Nickel, Total	mg/L	< 0.005		0.032	< 0.011
Nickel, Dissolved	mg/L	< 0.005		0.021	< 0.009
Selenium, Total	mg/L	< 0.003		< 0.00066	< 0.003
Selenium, Dissolved	mg/L	< 0.003		< 0.0016	< 0.003
Silver, Total	mg/L	< 0.0001		< 0.00033	< 0.0002
Silver, Dissolved	mg/L	< 0.0001		< 0.00066	< 0.0003
Thallium, Total	mg/L	0.0006		< 0.00016	< 0.0006
Thallium, Dissolved	mg/L	0.0005		< 0.00033	< 0.0005
Zinc, Total	mg/L	< 0.01		0.02	< 0.02
Zinc, Dissolved	mg/L	0.013		0.043	0.020
Potassium, Total	mg/L			4	
Potassium, Dissolved	mg/L			4	
Sodium, Total	mg/L			66	
Sodium, Dissolved	mg/L			66	
Sulfate	mg/L	44.22		37.2	42.7
pH	pH_Units	7.38		7.89	7.45
Specific Conductance	umhos/cm			568	
Turbidity	NTU			0.19	
Alkalinity, Total	mg/L			59	
Ammonia-N	mg/L	0.18	0.06	0.108	0.16
Nitrate-N	mg/L	2.25	1.02	< 0.092	< 1.80
Nitrite-N	mg/L			< 0.11	
Oil/Grease Hexane Extractable	mg/L	< 5	< 5	< 0.5	< 4
Total Kjeldahl Nitrogen	mg/L			< 0.4	
Total Nitrogen	mg/L			< 1.0	
Phosphorus, Total	mg/L	0.17	0.06	0.1	0.2
Chloride	mg/L	55.34		111	67.6
Fluoride	mg/L	0.171		< 0.12	< 0.16
Hardness	mg/L	104.31		110	106
Total Dissolved Solids	mg/L	272.5		310	281
Total Suspended Solids	mg/L	23.5	4.3	10	21
Biochemical Oxygen Demand	mg/L	< 3.0		3.4	< 3.1
Chlorine, Total Residual	mg/L	< 0.1	< 0.1	0.12	< 0.2
Sulfide, Total	mg/L	< 0.05		< 0.35	< 0.12
Cyanide, Total	mg/L	< 0.01		< 0.00058	< 0.01

Table 2
Blended Outfall 502 and Outfall 004

Parameters	Units	Outfall 004		Oil Water Internal Outfall 502	Outfall 004 + Outfall 502
		Presumed Maximum Day	Presumed Long Term Average	502 Discharge 5/7/2015	Presumed Weighted Average
Aldrin	µg/L	< 0.05		< 0.0006	< 0.04
alpha-BHC	µg/L	< 0.05		< 0.00013	< 0.04
beta-BHC	µg/L	< 0.05		< 0.00016	< 0.04
delta-BHC	µg/L	< 0.05		< 0.00024	< 0.04
gamma-BHC	µg/L	< 0.05		< 0.00015	< 0.04
Chlordane	µg/L	< 0.2		< 0.013	< 0.2
4,4'-DDD	µg/L	< 0.1		< 0.00016	< 0.1
4,4'-DDE	µg/L	< 0.1		< 0.00016	< 0.1
4,4'-DDT	µg/L	< 0.1		< 0.00023	< 0.1
Dieldrin	µg/L	< 0.1		< 0.00013	< 0.1
Endosulfan I	µg/L	< 0.1		< 0.00028	< 0.1
Endosulfan II	µg/L	< 0.1		< 0.00014	< 0.1
Endosulfan Sulfate	µg/L	< 0.1		< 0.0002	< 0.1
Endrin	µg/L	< 0.1		< 0.00015	< 0.1
Endrin Aldehyde	µg/L	< 0.1		< 0.00031	< 0.1
Heptachlor	µg/L	< 0.05		< 0.0003	< 0.04
Heptachlor Epoxide	µg/L	< 0.1		< 0.00016	< 0.1
Methoxychlor	µg/L	< 0.1		< 0.00026	< 0.1
Mirex	µg/L	< 0.1		< 0.00056	< 0.1
Total Polychlorinated Biphenyl	µg/L			0	
Toxaphene	µg/L	< 5		< 0.0098	< 4
Aroclor-1016	µg/L			< 0.041	
Aroclor-1221	µg/L			< 0.061	
Aroclor-1232	µg/L			< 0.076	
Aroclor-1242	µg/L			< 0.044	
Aroclor-1248	µg/L			< 0.035	
Aroclor-1254	µg/L			< 0.057	
Aroclor-1260	µg/L			< 0.041	
Azinphos Methyl	µg/L	< 1		< 0.34	< 1
Chlorpyrifos	µg/L	< 0.2		< 0.47	< 0.3
Demeton	µg/L	< 1		< 0.2	< 0.9
Diazinon	µg/L	< 1		< 0.27	< 0.9
Malathion	µg/L	< 1		< 0.21	< 0.9
Parathion	µg/L	< 1		< 0.31	< 0.9
Acrolein	µg/L	< 10		< 2.4	< 8.4
Acrylonitrile	µg/L	< 1.5		< 0.89	< 1.4
Benzene	µg/L	< 4.4		< 0.16	< 3.5
Bromodichloromethane	µg/L	< 2.2		< 0.13	< 1.8

Table 2
Blended Outfall 502 and Outfall 004

Parameters	Units	Outfall 004		Oil Water Internal Outfall 502	Outfall 004 + Outfall 502
		Presumed Maximum Day	Presumed Long Term Average	502 Discharge 5/7/2015	Presumed Weighted Average
Bromoform	µg/L	< 4.7		< 0.21	< 3.8
Bromomethane	µg/L	< 1.4		< 0.27	< 1.2
Carbon Tetrachloride	µg/L	< 2.8		< 0.24	< 2.3
Chlorobenzene	µg/L	< 6		< 0.11	< 5
Chlorodibromomethane	µg/L	< 3.1		< 0.22	< 2.5
Chloroform	µg/L	16.82		< 0.15	< 14
1,2-Dichlorobenzene	µg/L	< 5		< 0.2	< 4
1,3-Dichlorobenzene	µg/L	< 5		< 0.14	< 4
1,4-Dichlorobenzene	µg/L	< 5		< 0.15	< 4
1,2-Dichloroethane	µg/L	< 2.8		< 0.22	< 2.3
1,1-Dichloroethene	µg/L	< 2.8		< 0.17	< 2.3
trans-1,2-Dichloroethene	µg/L	< 1.6		< 0.12	< 1.3
1,2-Dichloropropane	µg/L	< 6		< 0.24	< 5
cis-1,3-Dichloropropene	µg/L			< 0.12	
trans-1,3-Dichloropropene	µg/L			< 0.14	
1,3-Dichloropropene, Total	µg/L	< 5.9		< 0.19	< 4.7
Ethylbenzene	µg/L	< 7.2		< 0.16	< 5.7
Methylene Chloride	µg/L	< 2.8		< 0.32	< 2.3
1,1,2,2-Tetrachloroethane	µg/L	< 6.9		< 0.22	< 5.5
Tetrachloroethene	µg/L	< 4.1		< 0.26	< 3.3
Toluene	µg/L	< 6		< 0.12	< 5
1,1,2-Trichloroethane	µg/L	< 5		< 0.3	< 4
Trichloroethene	µg/L	< 1.9		< 0.21	< 1.6
Vinyl Chloride	µg/L	< 1.8		< 0.24	< 1.5
Acenaphthene	µg/L	< 5		< 0.33	< 4
Anthracene	µg/L	< 5		< 0.34	< 4
Benzidine	µg/L	< 5		< 22.5	< 9
Benzo(a)anthracene	µg/L	< 5		< 0.3	< 4
Benzo(a)pyrene	µg/L	< 5		< 0.36	< 4
Benzo(b)fluoranthene	µg/L	< 5		< 0.41	< 4
Benzo(k)fluoranthene	µg/L	< 5		< 0.38	< 4
Butylbenzylphthalate	µg/L	< 5		< 0.33	< 4
bis(2-Chloroethyl)ether	µg/L	< 5		< 0.35	< 4
bis(2-Chloroisopropyl)ether	µg/L	< 5		< 0.5	< 5
2-Chloronaphthalene	µg/L	< 5		< 0.34	< 4
2-Chlorophenol	µg/L	< 5		< 0.59	< 5
Chrysene	µg/L	< 5		< 0.35	< 4
Di-n-Butylphthalate	µg/L	< 5		< 0.31	< 4

Table 2
Blended Outfall 502 and Outfall 004

Parameters	Units	Outfall 004		Oil Water Internal Outfall 502	Outfall 004 + Outfall 502
		Presumed Maximum Day	Presumed Long Term Average	502 Discharge 5/7/2015	Presumed Weighted Average
Dibenzo(a,h)anthracene	µg/L	< 5		< 0.29	< 4
3,3-Dichlorobenzidine	µg/L	< 5		< 2.8	< 5
2,4-Dichlorophenol	µg/L	< 5		< 0.46	< 5
Diethylphthalate	µg/L	< 5		< 0.3	< 4
2,4-Dimethylphenol	µg/L	< 5		< 2.9	< 5
Dimethylphthalate	µg/L	< 5		< 0.38	< 4
2,4-Dinitrophenol	µg/L	< 5		< 2.3	< 5
2,4-Dinitrotoluene	µg/L	< 5		< 0.38	< 4
1,2-Diphenylhydrazine	µg/L	< 0.1		< 0.32	< 0.2
bis(2-Ethylhexyl)phthalate	µg/L	< 5		< 0.35	< 4
Fluoranthene	µg/L	< 5		< 0.25	< 4
Fluorene	µg/L	< 5		< 0.37	< 4
Hexachlorobenzene	µg/L	< 5		< 0.3	< 4
Hexachlorobutadiene	µg/L	< 5		< 0.29	< 4
Hexachlorocyclopentadiene	µg/L	< 5		< 1	< 5
Hexachloroethane	µg/L	< 5		< 0.32	< 4
Indeno(1,2,3-cd)pyrene	µg/L	< 5		< 0.29	< 4
Isophorone	µg/L	< 5		< 0.38	< 4
2-Methyl-4,6-dinitrophenol	µg/L	< 50		< 1.3	< 40
Nitrobenzene	µg/L	< 5		< 0.61	< 5
N-Nitrosodimethylamine	µg/L	< 5		< 0.45	< 5
N-Nitroso-di-n-propylamine	µg/L	< 5		< 0.54	< 5
N-Nitrosodiphenylamine	µg/L	< 5		< 1	< 5
Pentachlorophenol	µg/L	< 5		< 1.8	< 5
Phenol	µg/L	< 5		< 0.23	< 4
Pyrene	µg/L	< 5		< 0.35	< 4
1,2,4-Trichlorobenzene	µg/L	< 5		< 0.26	< 4
2,4,6-Trichlorophenol	µg/L	< 5		< 0.36	< 4
Kepone	µg/L	< 0.1		< 1.8	< 0.5
FIELD PARAMETERS					
pH	pH_Units	7.38		8.52	7.48
Temperature	° C	34.6		22.38	32.0
Conductivity	µs/cm			566	
Dissolved Oxygen	%			102.5	
Dissolved Oxygen	mg/l			8.98	
ORP	mv			143.7	
Chlorine, Total Residual	ppm	< 0.1	< 0.1	0.00	< 0.1

Table 2
Blended Outfall 502 and Outfall 004

Parameters	Units	Outfall 004		Oil Water Internal Outfall 502	Outfall 004 + Outfall 502
		Presumed Maximum Day	Presumed Long Term Average	502 Discharge 5/7/2015	Presumed Weighted Average

Footnotes:

1) ND- Not detected above the laboratory detection limit.
2) NA- Not analyzed.
3) mg/L - milligrams per liter.
4) µg/L- micrograms per liter.
5) µS/cm - microsiemens/centimeter.
6) mv- millivolts.
7) ppm- parts per million.
8) ORP- Oxidation Reduction Potential.
9) Outfall maximum and long term average data is from the 2013 permit application for reissuance of Possum Point's VPDES Permit.
10) Presumed weighted average of Outfall 004 and Outfall 502 is based on long term avg & 30-day max flow of 0.567-MGD for the oil water basin (Outfall 502) & long term avg flow of 2.02-MGD for Outfall 004 in 2013 Permit Reissuance Application.

Table 3
Pond D Comingled Water

Parameters	Units	Outfall 005		Pond D Surface Water			
		Presumed Maximum Day	Presumed Long Term Average	Pond D 2 6/9/2015	Pond D 3 6/15/2015	Pond D 4 6/16/2015	Presumed Average
Aluminum, Total	mg/L	< 0.09		0.11	0.095	0.075	0.10
Aluminum, Dissolved	mg/L	< 0.09		< 0.026	< 0.026	< 0.026	< 0.026
Antimony, Total	mg/L	0.001		0.0034	0.0036	0.0035	0.0035
Antimony, Dissolved	mg/L	0.001		0.0034	0.0037	0.0036	0.0036
Arsenic, Total	mg/L	0.011		0.018	0.019	0.019	0.019
Arsenic, Dissolved	mg/L	0.01		0.017	0.018	0.018	0.018
Boron, Total	mg/L	0.06		0.45	0.48	0.48	0.47
Boron, Dissolved	mg/L			0.47	0.47	0.47	0.47
Barium, Total	mg/L	0.208		0.14	0.15	0.16	0.15
Barium, Dissolved	mg/L	0.19		0.14	0.15	0.15	0.15
Beryllium, Total	mg/L	< 0.0002		< 0.0001	< 0.0001	< 0.0001	< 0.0001
Beryllium, Dissolved	mg/L	< 0.0002		< 0.0001	< 0.0001	< 0.0001	< 0.0001
Cadmium, Total	mg/L	< 0.0003		< 0.00016	< 0.00016	< 0.00016	< 0.00016
Cadmium, Dissolved	mg/L	< 0.0003		< 0.00033	< 0.00033	< 0.00033	< 0.00033
Calcium, Total	mg/L			35.5	38.4	38.2	37.4
Calcium, Dissolved	mg/L			37.4	37.2	36.8	37.2
Chromium, Total	mg/L	< 0.02		< 0.00033	< 0.00033	< 0.00033	< 0.00033
Chromium, Dissolved	mg/L	< 0.001		< 0.00066	< 0.00066	< 0.00066	< 0.00066
Trivalent Chromium, Total	mg/L			< 0.01	< 0.01	< 0.01	< 0.01
Trivalent Chromium, Dissolved	mg/L			< 0.01	< 0.01	< 0.01	< 0.01
Hexavalent Chromium, Total	µg/L	< 5		< 0.052	< 0.052	< 0.052	< 0.052
Hexavalent Chromium, Dissolved	µg/L			< 0.052	< 0.052	< 0.052	< 0.052
Cobalt, Total	mg/L	< 0.0006		< 0.00083	< 0.00083	< 0.00083	< 0.00083
Cobalt, Dissolved	mg/L	< 0.0006		< 0.0016	< 0.0016	< 0.0016	< 0.0016
Copper, Total	mg/L	0.001		< 0.00083	< 0.00083	< 0.00083	< 0.00083
Copper, Dissolved	mg/L	< 0.001		< 0.0016	< 0.0016	< 0.0016	< 0.0016
Iron, Total	mg/L	0.26		0.054	0.072	0.057	0.061

gai consultants
transforming ideas into reality

00022306

Table 3
Pond D Comingled Water

Parameters	Units	Outfall 005		Pond D Surface Water			
		Presumed Maximum Day	Presumed Long Term Average	Pond D 2 6/9/2015	Pond D 3 6/15/2015	Pond D 4 6/16/2015	Presumed Average
Iron, Dissolved	mg/L	0.06		< 0.02	< 0.02	< 0.02	< 0.02
Lead, Total	mg/L	< 0.001		< 0.00033	< 0.00033	< 0.00033	< 0.00033
Lead, Dissolved	mg/L	< 0.001		< 0.00066	< 0.00066	< 0.00066	< 0.00066
Lithium, Total	mg/L			< 0.016	< 0.016	< 0.016	< 0.016
Lithium, Dissolved	mg/L			< 0.033	< 0.033	< 0.033	< 0.033
Manganese, Total	mg/L	0.08		0.026	0.044	0.041	0.037
Manganese, Dissolved	mg/L	0.06		0.0075	0.007	0.0073	0.008
Magnesium, Total	mg/L	15.1		13.4	14.9	15	15
Magnesium, Dissolved	mg/L	15.38		14.2	14.3	14.6	14.4
Molybdenum, Total	mg/L	0.006		0.049	0.051	0.05	0.05
Molybdenum, Dissolved	mg/L	0.006		0.046	0.048	0.049	0.048
Mercury, Total	mg/L	< 0.0002		< 0.00016	< 0.00016	< 0.00016	< 0.00016
Mercury, Dissolved	mg/L	< 0.0002		< 0.00016	< 0.00016	< 0.00016	< 0.00016
Nickel, Total	mg/L	0.013		0.0029	0.0028	0.0027	0.0028
Nickel, Dissolved	mg/L	0.01		< 0.0016	< 0.0016	< 0.0016	< 0.0016
Selenium, Total	mg/L	< 0.003		0.0056	0.0052	0.0058	0.0056
Selenium, Dissolved	mg/L	<0.003		0.0062	0.0057	0.0054	0.0058
Silver, Total	mg/L	< 0.0001		< 0.00033	< 0.00033	< 0.00033	< 0.00033
Silver, Dissolved	mg/L	< 0.0001		< 0.00066	< 0.00066	< 0.00066	< 0.00066
Thallium, Total	mg/L	0.0005		< 0.00016	< 0.00016	< 0.00016	< 0.00016
Thallium, Dissolved	mg/L	0.0004		< 0.00033	< 0.00033	< 0.00033	< 0.00033
Zinc, Total	mg/L	0.01		0.01	< 0.00083	< 0.00083	< 0.01
Zinc, Dissolved	mg/L	< 0.01		< 0.0016	< 0.0016	< 0.0016	< 0.0016
Potassium, Total	mg/L			6.2	6.9	6.7	6.6
Potassium, Dissolved	mg/L			6.6	6.6	6.4	6.6
Sodium, Total	mg/L			38.3	41.7	41.7	40.6
Sodium, Dissolved	mg/L			40.1	40.5	41	41

Table 3
Pond D Comingled Water

Parameters	Units	Outfall 005		Pond D Surface Water			
		Presumed Maximum Day	Presumed Long Term Average	Pond D 2 6/9/2015	Pond D 3 6/15/2015	Pond D 4 6/16/2015	Presumed Average
Sulfate	mg/L	40.69		93.6	132	84.4	104
pH	pH_Units	7.4		7.9	8.01	7.98	8.0
Specific Conductance	umhos/cm			537	579	534	550
Turbidity	NTU			1.18	0.64	2.73	1.6
Alkalinity, Total	mg/L			61	IP	64	63
Ammonia-N	mg/L	< 0.05	< 0.05	< 0.03	< 0.03	< 0.03	< 0.03
Nitrate-N	mg/L	0.1	1.00	< 0.037	< 0.037	< 0.037	< 0.037
Nitrite-N	mg/L			< 0.044	< 0.044	< 0.044	< 0.044
Oil/Grease Hexane Extractable	mg/L	< 5	< 5	6.3	< 0.5	< 0.5	< 3
Total Kjeldahl Nitrogen	mg/L			< 0.4	< 0.4	< 0.4	< 0.4
Total Nitrogen	mg/L			< 1.0	< 1.0	<	< 1.0
Phosphorus, Total	mg/L	< 0.05	< 0.05	< 0.019	< 0.019	0.13	< 0.06
Chloride	mg/L	153.19		71.8	74.3	67.1	71.1
Fluoride	mg/L	0.142		0.5	0.5	0.36	0.5
Hardness	mg/L	129.96		144	157	157	153
Total Dissolved Solids	mg/L	452		367	362	334	355
Total Suspended Solids	mg/L	13.4	6.27	9	< 5	8	< 8
Biochemical Oxygen Demand	mg/L	< 12.6		< 0.8	< 0.8	< 0.8	< 0.8
Chlorine, Total Residual	mg/L	< 0.1	< 0.1	< 0.009	< 0.009	< 0.009	< 0.009
Sulfide, Total	mg/L	< 0.05		< 0.35	< 0.35	< 0.35	< 0.35
Cyanide, Total	mg/L	< 0.01		< 0.00058	< 0.00058	< 0.00058	< 0.00058
Aldrin	µg/L	< 0.05		< 0.0006	< 0.0006	< 0.00062	< 0.0007
alpha-BHC	µg/L	< 0.05		< 0.00013	< 0.00013	< 0.00014	< 0.00014
beta-BHC	µg/L	< 0.05		< 0.00016	< 0.00016	< 0.00017	< 0.00017
delta-BHC	µg/L	< 0.05		< 0.00024	< 0.00024	< 0.00025	< 0.00025
gamma-BHC	µg/L	< 0.05		< 0.00015	< 0.00015	< 0.00015	< 0.00015
Chlordane	µg/L	< 0.2		< 0.013	< 0.013	< 0.013	< 0.013

gai consultants
transforming ideas into reality

00022308

Table 3
Pond D Comingled Water

Parameters	Units	Outfall 005		Pond D Surface Water			
		Presumed Maximum Day	Presumed Long Term Average	Pond D 2 6/9/2015	Pond D 3 6/15/2015	Pond D 4 6/16/2015	Presumed Average
4,4'-DDD	µg/L	< 0.1		< 0.00016	< 0.00016	< 0.00017	< 0.00017
4,4'-DDE	µg/L	< 0.1		< 0.00016	< 0.00016	< 0.00017	< 0.00017
4,4'-DDT	µg/L	< 0.1		< 0.00023	< 0.00023	< 0.00024	< 0.00024
Dieldrin	µg/L	< 0.1		< 0.00013	< 0.00013	< 0.00014	< 0.00014
Endosulfan I	µg/L	< 0.1		< 0.00028	< 0.00028	< 0.00029	< 0.00029
Endosulfan II	µg/L	< 0.1		< 0.00014	< 0.00014	< 0.00015	< 0.00015
Endosulfan Sulfate	µg/L	< 0.1		< 0.0002	< 0.0002	< 0.00021	< 0.0003
Endrin	µg/L	< 0.1		< 0.00015	< 0.00015	< 0.00015	< 0.00015
Endrin Aldehyde	µg/L			< 0.00031	< 0.00031	< 0.00032	< 0.00032
Heptachlor	µg/L	< 0.05		< 0.0003	< 0.0003	< 0.00031	< 0.0004
Heptachlor Epoxide	µg/L	< 0.1		< 0.00016	< 0.00016	< 0.00017	< 0.00017
Methoxychlor	µg/L	< 0.1		< 0.00026	< 0.00026	< 0.00027	< 0.00027
Mirex	µg/L	< 0.1		< 0.00056	< 0.00056	< 0.00058	< 0.00057
Total Polychlorinated Biphenyl	µg/L			0	0	0	0
Toxaphene	µg/L	< 5		< 0.0098	< 0.0098	< 0.01	< 0.01
Aroclor-1016	µg/L			< 0.041	< 0.041	< 0.042	< 0.042
Aroclor-1221	µg/L			< 0.061	< 0.061	< 0.063	< 0.062
Aroclor-1232	µg/L			< 0.076	< 0.076	< 0.079	< 0.077
Aroclor-1242	µg/L			< 0.044	< 0.044	< 0.046	< 0.045
Aroclor-1248	µg/L			< 0.035	< 0.035	< 0.037	< 0.036
Aroclor-1254	µg/L			< 0.057	< 0.057	< 0.06	< 0.06
Aroclor-1260	µg/L			< 0.041	< 0.041	< 0.042	< 0.042
Azinphos Methyl	µg/L	< 2		< 0.34	< 0.35	< 0.35	< 0.35
Chlorpyrifos	µg/L	< 0.2		< 0.46	< 0.47	< 0.47	< 0.47
Demeton	µg/L	< 1		< 0.2	< 0.21	< 0.21	< 0.3
Diazinon	µg/L	< 1		< 0.27	< 0.27	< 0.27	< 0.27
Malathion	µg/L	< 1		< 0.21	< 0.22	< 0.21	< 0.22

00022309

gai consultants
transforming ideas into reality

Table 3
Pond D Comingled Water

Parameters	Units	Outfall 005		Pond D Surface Water			
		Presumed Maximum Day	Presumed Long Term Average	Pond D 2 6/9/2015	Pond D 3 6/15/2015	Pond D 4 6/16/2015	Presumed Average
Parathion	µg/L	< 1		< 0.31	< 0.31	< 0.31	< 0.31
Acrolein	µg/L	< 10		< 2.4	< 2.4	< 2.4	< 2.4
Acrylonitrile	µg/L	< 1.5		< 0.89	< 0.89	< 0.89	< 0.89
Benzene	µg/L	< 4.4		< 0.16	< 0.16	< 0.16	< 0.16
Bromodichloromethane	µg/L	< 2.2		< 0.13	< 0.13	< 0.13	< 0.13
Bromoform	µg/L	< 4.7		< 0.21	< 0.21	< 0.21	< 0.21
Bromomethane	µg/L	< 1.4		< 0.27	< 0.27	< 0.27	< 0.27
Carbon Tetrachloride	µg/L	< 2.8		< 0.24	< 0.24	< 0.24	< 0.24
Chlorobenzene	µg/L	< 6		< 0.11	< 0.11	< 0.11	< 0.11
Chlorodibromomethane	µg/L	< 3.1		< 0.22	< 0.22	< 0.22	< 0.22
Chloroform	µg/L	< 16		< 0.15	< 0.15	< 0.15	< 0.15
1,2-Dichlorobenzene	µg/L	< 5		< 0.2	< 0.2	< 0.2	< 0.2
1,3-Dichlorobenzene	µg/L	< 5		< 0.14	< 0.14	< 0.14	< 0.14
1,4-Dichlorobenzene	µg/L	< 5		< 0.15	< 0.15	< 0.15	< 0.15
1,2-Dichloroethane	µg/L	< 2.8		< 0.22	< 0.22	< 0.22	< 0.22
1,1-Dichloroethene	µg/L	< 2.8		< 0.17	< 0.17	< 0.17	< 0.17
trans-1,2-Dichloroethene	µg/L	< 1.6		< 0.12	< 0.12	< 0.12	< 0.12
1,2-Dichloropropane	µg/L	< 6		< 0.24	< 0.24	< 0.24	< 0.24
cis-1,3-Dichloropropene	µg/L			< 0.12	< 0.12	< 0.12	< 0.12
trans-1,3-Dichloropropene	µg/L			< 0.14	< 0.14	< 0.14	< 0.14
1,3-Dichloropropene, Total	µg/L	< 5.9		< 0.19	< 0.19	< 0.19	< 0.19
Ethylbenzene	µg/L	< 7.2		< 0.16	< 0.16	< 0.16	< 0.16
Methylene Chloride	µg/L	< 2.8		< 0.32	< 0.32	< 0.32	< 0.32
1,1,2,2-Tetrachloroethane	µg/L	< 6.9		< 0.22	< 0.22	< 0.22	< 0.22
Tetrachloroethene	µg/L	< 4.1		< 0.26	< 0.26	< 0.26	< 0.26
Toluene	µg/L	< 6		< 0.12	< 0.12	< 0.12	< 0.12
1,1,2-Trichloroethane	µg/L	< 5		< 0.3	< 0.3	< 0.3	< 0.3

gai consultants
transforming ideas into reality

00022310

Table 3
Pond D Comingled Water

Parameters	Units	Outfall 005		Pond D Surface Water			
		Presumed Maximum Day	Presumed Long Term Average	Pond D 2 6/9/2015	Pond D 3 6/15/2015	Pond D 4 6/16/2015	Presumed Average
Trichloroethene	µg/L	< 1.9		< 0.21	< 0.21	< 0.21	< 0.21
Vinyl Chloride	µg/L	< 1.8		< 0.24	< 0.24	< 0.24	< 0.24
Acenaphthene	µg/L	< 5		< 0.33	< 0.33	< 0.32	< 0.33
Anthracene	µg/L	< 5		< 0.33	< 0.34	< 0.33	< 0.34
Benzidine	µg/L	< 5		< 22.3	< 22.5	< 22.2	< 22.4
Benzo(a)anthracene	µg/L	< 5		< 0.3	< 0.3	< 0.3	< 0.3
Benzo(a)pyrene	µg/L	< 5		< 0.35	< 0.36	< 0.35	< 0.36
Benzo(b)fluoranthene	µg/L	< 5		< 0.41	< 0.41	< 0.41	< 0.41
Benzo(k)fluoranthene	µg/L	< 5		< 0.37	< 0.38	< 0.37	< 0.38
Butylbenzylphthalate	µg/L	< 5		< 0.33	< 0.33	< 0.32	< 0.33
bis(2-Chloroethyl)ether	µg/L	< 5		< 0.34	< 0.35	< 0.34	< 0.35
bis(2-Chloroisopropyl)ether	µg/L	< 5		< 0.49	< 0.5	< 0.49	< 0.5
2-Chloronaphthalene	µg/L	< 5		< 0.33	< 0.34	< 0.33	< 0.34
2-Chlorophenol	µg/L	< 5		< 0.59	< 0.59	< 0.58	< 0.59
Chrysene	µg/L	< 5		< 0.34	< 0.35	< 0.34	< 0.35
Di-n-Butylphthalate	µg/L	< 5		< 0.31	< 0.31	< 0.31	< 0.31
Dibenzo(a,h)anthracene	µg/L	< 5		< 0.29	< 0.29	< 0.29	< 0.29
3,3-Dichlorobenzidine	µg/L	< 5		< 2.8	< 2.8	< 2.8	< 2.8
2,4-Dichlorophenol	µg/L	< 5		< 0.46	< 0.46	< 0.45	< 0.46
Diethylphthalate	µg/L	< 5		< 0.3	< 0.3	< 0.3	< 0.3
2,4-Dimethylphenol	µg/L	< 5		< 2.9	< 2.9	< 2.9	< 2.9
Dimethylphthalate	µg/L	< 5		< 0.37	< 0.38	< 0.37	< 0.38
2,4-Dinitrophenol	µg/L	< 5		< 2.3	< 2.3	< 2.3	< 2.3
2,4-Dinitrotoluene	µg/L	< 5		< 0.37	< 0.38	< 0.37	< 0.38
1,2-Diphenylhydrazine	µg/L	< 5		< 0.32	< 0.32	< 0.31	< 0.32
bis(2-Ethylhexyl)phthalate	µg/L	< 5		< 0.34	< 0.35	< 0.34	< 0.35
Fluoranthene	µg/L	< 5		< 0.25	< 0.25	< 0.25	< 0.25

00022311

gai consultants
transforming ideas into reality

Table 3
Pond D Comingled Water

Parameters	Units	Outfall 005		Pond D Surface Water			
		Presumed Maximum Day	Presumed Long Term Average	Pond D 2 6/9/2015	Pond D 3 6/15/2015	Pond D 4 6/16/2015	Presumed Average
Fluorene	µg/L	< 5		< 0.36	< 0.37	< 0.36	< 0.37
Hexachlorobenzene	µg/L	< 5		< 0.3	< 0.3	< 0.3	< 0.3
Hexachlorobutadiene	µg/L	< 5		< 0.29	< 0.29	< 0.29	< 0.29
Hexachlorocyclopentadiene	µg/L	< 5		< 1	< 1	< 1	< 1
Hexachloroethane	µg/L	< 5		< 0.32	< 0.32	< 0.31	< 0.32
Indeno(1,2,3-cd)pyrene	µg/L	< 5		< 0.29	< 0.29	< 0.29	< 0.29
Isophorone	µg/L	< 5		< 0.38	< 0.38	< 0.38	< 0.38
2-Methyl-4,6-dinitrophenol	µg/L			< 1.3	< 1.3	< 1.3	< 1.3
Nitrobenzene	µg/L	< 5		< 0.6	< 0.61	< 0.6	< 0.7
N-Nitrosodimethylamine	µg/L	< 5		< 0.45	< 0.45	< 0.44	< 0.45
N-Nitroso-di-n-propylamine	µg/L	< 5		< 0.53	< 0.54	< 0.53	< 0.54
N-Nitrosodiphenylamine	µg/L	< 5		< 1	< 1	< 1	< 1
Pentachlorophenol	µg/L	< 5		< 1.8	< 1.8	< 1.8	< 1.8
Phenol	µg/L	< 5		< 0.22	< 0.23	< 0.22	< 0.23
Pyrene	µg/L	< 5		< 0.34	< 0.35	< 0.34	< 0.35
1,2,4-Trichlorobenzene	µg/L	< 5		< 0.26	< 0.26	< 0.26	< 0.26
2,4,6-Trichlorophenol	µg/L	< 5		< 0.35	< 0.36	< 0.35	< 0.36
Kepone	µg/L	< 0.1		< 1.8	< 1.8	< 1.8	< 1.8
FIELD PARAMETERS							
pH (Field)	pH_Units	7.4		8.07	8.1	7.97	8.05
Temperature	° C	29.2		29.98	31.8	32.5	31.43
Conductivity	µs/cm			565	1080	880	842
Dissolved Oxygen	%			127.7			127.70
Dissolved Oxygen	mg/l			10.25			10.25
ORP	mv			140.1			140.10
Chlorine, Total Residual	ppm	< 0.1	< 0.1	0	0.09	0.11	0.07

00022312

gai consultants
transforming ideas into reality

Table 3
Pond D Comingled Water

Parameters	Units	Outfall 005		Pond D Surface Water			
		Presumed Maximum Day	Presumed Long Term Average	Pond D 2 6/9/2015	Pond D 3 6/15/2015	Pond D 4 6/16/2015	Presumed Average

Footnotes:

1) ND- Not detected above the laboratory detection limit.

2) NA- Not analyzed.

3) mg/L - milligrams per liter.

4) µg/L- micrograms per liter.

5) µS/cm - microsiemens/centimeter.

6) mv- millivolts.

7) ppm- parts per million.

8) ORP- Oxidation Reduction Potential.

9) Outfall maximum and long term average data is from the 2013 permit application for reissuance of Possum Point's VPDES Permit.

Table 4
Blended Pond D Comingled Water, Outfall 502, and Outfall 004

Parameters	Units	Outfall 004		Pond D Surface Water	Outfall 004 + Outfall 502	Pond D Comingled Water + 004 + 502
		Presumed Maximum Day	Presumed Long Term Average	Presumed Average	Presumed Weighted Average	Presumed Weighted Average
Aluminum, Total	mg/L	< 0.09		0.10	< 0.09	< 0.10
Aluminum, Dissolved	mg/L	< 0.09		< 0.026	< 0.08	< 0.06
Antimony, Total	mg/L	< 0.001		0.0035	< 0.001	< 0.003
Antimony, Dissolved	mg/L	< 0.001		0.0036	< 0.001	< 0.003
Arsenic, Total	mg/L	< 0.003		0.019	< 0.003	< 0.011
Arsenic, Dissolved	mg/L	< 0.003		0.018	< 0.003	< 0.011
Boron, Total	mg/L	0.03		0.47	< 0.03	< 0.25
Boron, Dissolved	mg/L			0.47		
Barium, Total	mg/L	0.044		0.15	0.043	0.1
Barium, Dissolved	mg/L	0.033		0.15	0.033	0.1
Beryllium, Total	mg/L	< 0.0002		< 0.0001	< 0.0002	< 0.0002
Beryllium, Dissolved	mg/L	< 0.0002		< 0.0001	< 0.0002	< 0.0002
Cadmium, Total	mg/L	< 0.0003		< 0.00016	< 0.0003	< 0.0003
Cadmium, Dissolved	mg/L	< 0.0003		< 0.00033	< 0.0003	< 0.0004
Calcium, Total	mg/L			37.4		
Calcium, Dissolved	mg/L			37.2		
Chromium, Total	mg/L	< 0.001		< 0.00033	< 0.001	< 0.001
Chromium, Dissolved	mg/L	< 0.001		< 0.00066	< 0.001	< 0.001
Trivalent Chromium, Total	mg/L			< 0.01		
Trivalent Chromium, Dissolved	mg/L			< 0.01		
Hexavalent Chromium, Total	µg/L	< 5		< 0.052	< 4	< 3
Hexavalent Chromium, Dissolved	µg/L			< 0.052		
Cobalt, Total	mg/L	< 0.0006		< 0.00083	< 0.0007	< 0.0008
Cobalt, Dissolved	mg/L	< 0.0006		< 0.0016	< 0.0009	< 0.0013
Copper, Total	mg/L	0.007		< 0.00083	0.009	< 0.005
Copper, Dissolved	mg/L	0.004		< 0.0016	0.005	< 0.004
Iron, Total	mg/L	7.00		0.061	5.7	3.0
Iron, Dissolved	mg/L	0.09		< 0.02	0.10	< 0.07
Lead, Total	mg/L	< 0.001		< 0.00033	< 0.001	< 0.001
Lead, Dissolved	mg/L	< 0.001		< 0.00066	< 0.001	< 0.001
Lithium, Total	mg/L			< 0.016		
Lithium, Dissolved	mg/L			< 0.033		
Manganese, Total	mg/L	0.04		0.037	0.07	0.06
Manganese, Dissolved	mg/L	0.02		0.008	0.03	0.02
Magnesium, Total	mg/L	8.36		15	8.7	12
Magnesium, Dissolved	mg/L	8.17		14.4	8.5	12
Molybdenum, Total	mg/L	0.002		0.05	0.003	0.03

Table 4
Blended Pond D Comingled Water, Outfall 502, and Outfall 004

Parameters	Units	Outfall 004		Pond D Surface Water	Outfall 004 + Outfall 502	Pond D Comingled Water + 004 + 502
		Presumed Maximum Day	Presumed Long Term Average	Presumed Average	Presumed Weighted Average	Presumed Weighted Average
Molybdenum, Dissolved	mg/L	0.002		0.048	0.003	0.026
Mercury, Total	mg/L	< 0.0002		< 0.00016	< 0.0002	< 0.0002
Mercury, Dissolved	mg/L	< 0.0002		< 0.00016	< 0.0002	< 0.0002
Nickel, Total	mg/L	< 0.005		0.0028	< 0.011	< 0.007
Nickel, Dissolved	mg/L	< 0.005		< 0.0016	< 0.009	< 0.006
Selenium, Total	mg/L	< 0.003		0.0056	< 0.003	< 0.005
Selenium, Dissolved	mg/L	< 0.003		0.0058	< 0.003	< 0.005
Silver, Total	mg/L	< 0.0001		< 0.00033	< 0.0002	< 0.0003
Silver, Dissolved	mg/L	< 0.0001		< 0.00066	< 0.0003	< 0.0005
Thallium, Total	mg/L	0.0006		< 0.00016	< 0.0006	< 0.0004
Thallium, Dissolved	mg/L	0.0005		< 0.00033	< 0.0005	< 0.0005
Zinc, Total	mg/L	< 0.01		< 0.01	< 0.02	< 0.02
Zinc, Dissolved	mg/L	0.013		< 0.0016	0.020	< 0.011
Potassium, Total	mg/L			6.6		
Potassium, Dissolved	mg/L			6.6		
Sodium, Total	mg/L			40.6		
Sodium, Dissolved	mg/L			41		
Sulfate	mg/L	44.22		104	42.7	73.0
pH	pH_Units	7.38		8.0	7.45	7.7
Specific Conductance	umhos/cm			550		
Turbidity	NTU			1.6		
Alkalinity, Total	mg/L			63		
Ammonia-N	mg/L	0.18	0.06	< 0.03	0.16	< 0.10
Nitrate-N	mg/L	2.25	1.02	< 0.037	< 1.80	< 1.35
Nitrite-N	mg/L			< 0.044		
Oil/Grease Hexane Extractable	mg/L	< 5	< 5	< 3	< 4	< 4
Total Kjeldahl Nitrogen	mg/L			< 0.4		
Total Nitrogen	mg/L			< 1.0		
Phosphorus, Total	mg/L	0.17	0.06	< 0.06	0.2	< 0.2
Chloride	mg/L	55.34		71.1	67.6	69.4
Fluoride	mg/L	0.171		0.5	< 0.16	< 0.4
Hardness	mg/L	104.31		153	106	130
Total Dissolved Solids	mg/L	272.5		355	281	318
Total Suspended Solids	mg/L	23.5	4.3	< 8	21	< 20
Biochemical Oxygen Demand	mg/L	< 3.0		< 0.8	< 3.1	< 2.0
Chlorine, Total Residual	mg/L	< 0.1	< 0.1	< 0.009	< 0.2	< 0.2
Sulfide, Total	mg/L	< 0.05		< 0.35	< 0.12	< 0.24

Table 4
Blended Pond D Comingled Water, Outfall 502, and Outfall 004

Parameters	Units	Outfall 004		Pond D Surface Water	Outfall 004 + Outfall 502	Pond D Comingled Water + 004 + 502
		Presumed Maximum Day	Presumed Long Term Average	Presumed Average	Presumed Weighted Average	Presumed Weighted Average
Cyanide, Total	mg/L	< 0.01		< 0.00058	< 0.01	< 0.01
Aldrin	µg/L	< 0.05		< 0.0007	< 0.04	< 0.03
alpha-BHC	µg/L	< 0.05		< 0.00014	< 0.04	< 0.03
beta-BHC	µg/L	< 0.05		< 0.00017	< 0.04	< 0.03
delta-BHC	µg/L	< 0.05		< 0.00025	< 0.04	< 0.03
gamma-BHC	µg/L	< 0.05		< 0.00015	< 0.04	< 0.03
Chlordane	µg/L	< 0.2		< 0.013	< 0.2	< 0.2
4,4'-DDD	µg/L	< 0.1		< 0.00017	< 0.1	< 0.1
4,4'-DDE	µg/L	< 0.1		< 0.00017	< 0.1	< 0.1
4,4'-DDT	µg/L	< 0.1		< 0.00024	< 0.1	< 0.1
Dieldrin	µg/L	< 0.1		< 0.00014	< 0.1	< 0.1
Endosulfan I	µg/L	< 0.1		< 0.00029	< 0.1	< 0.1
Endosulfan II	µg/L	< 0.1		< 0.00015	< 0.1	< 0.1
Endosulfan Sulfate	µg/L	< 0.1		< 0.0003	< 0.1	< 0.1
Endrin	µg/L	< 0.1		< 0.00015	< 0.1	< 0.1
Endrin Aldehyde	µg/L	< 0.1		< 0.00032	< 0.1	< 0.1
Heptachlor	µg/L	< 0.05		< 0.0004	< 0.04	< 0.03
Heptachlor Epoxide	µg/L	< 0.1		< 0.00017	< 0.1	< 0.1
Methoxychlor	µg/L	< 0.1		< 0.00027	< 0.1	< 0.1
Mirex	µg/L	< 0.1		< 0.00057	< 0.1	< 0.1
Total Polychlorinated Biphenyl	µg/L			0		
Toxaphene	µg/L	< 5		< 0.01	< 4	< 3
Aroclor-1016	µg/L			< 0.042		
Aroclor-1221	µg/L			< 0.062		
Aroclor-1232	µg/L			< 0.077		
Aroclor-1242	µg/L			< 0.045		
Aroclor-1248	µg/L			< 0.036		
Aroclor-1254	µg/L			< 0.06		
Aroclor-1260	µg/L			< 0.042		
Azinphos Methyl	µg/L	< 1		< 0.35	< 1	< 0.7
Chlorpyrifos	µg/L	< 0.2		< 0.47	< 0.3	< 0.4
Demeton	µg/L	< 1		< 0.3	< 0.9	< 0.7
Diazinon	µg/L	< 1		< 0.27	< 0.9	< 0.6
Malathion	µg/L	< 1		< 0.22	< 0.9	< 0.6
Parathion	µg/L	< 1		< 0.31	< 0.9	< 0.7
Acrolein	µg/L	< 10		< 2.4	< 8.4	< 5.5
Acrylonitrile	µg/L	< 1.5		< 0.89	< 1.4	< 1.2

Table 4
Blended Pond D Comingled Water, Outfall 502, and Outfall 004

Parameters	Units	Outfall 004		Pond D Surface Water	Outfall 004 + Outfall 502	Pond D Comingled Water + 004 + 502
		Presumed Maximum Day	Presumed Long Term Average	Presumed Average	Presumed Weighted Average	Presumed Weighted Average
Benzene	µg/L	< 4.4		< 0.16	< 3.5	< 1.9
Bromodichloromethane	µg/L	< 2.2		< 0.13	< 1.8	< 0.98
Bromoform	µg/L	< 4.7		< 0.21	< 3.8	< 2.1
Bromomethane	µg/L	< 1.4		< 0.27	< 1.2	< 0.75
Carbon Tetrachloride	µg/L	< 2.8		< 0.24	< 2.3	< 1.3
Chlorobenzene	µg/L	< 6		< 0.11	< 5	< 3
Chlorodibromomethane	µg/L	< 3.1		< 0.22	< 2.5	< 1.4
Chloroform	µg/L	16.82		< 0.15	< 14	< 7.2
1,2-Dichlorobenzene	µg/L	< 5		< 0.2	< 4	< 3
1,3-Dichlorobenzene	µg/L	< 5		< 0.14	< 4	< 3
1,4-Dichlorobenzene	µg/L	< 5		< 0.15	< 4	< 3
1,2-Dichloroethane	µg/L	< 2.8		< 0.22	< 2.3	< 1.3
1,1-Dichloroethene	µg/L	< 2.8		< 0.17	< 2.3	< 1.3
trans-1,2-Dichloroethene	µg/L	< 1.6		< 0.12	< 1.3	< 0.72
1,2-Dichloropropane	µg/L	< 6		< 0.24	< 5	< 3
cis-1,3-Dichloropropene	µg/L			< 0.12		
trans-1,3-Dichloropropene	µg/L			< 0.14		
1,3-Dichloropropene, Total	µg/L	< 5.9		< 0.19	< 4.7	< 2.5
Ethylbenzene	µg/L	< 7.2		< 0.16	< 5.7	< 3.0
Methylene Chloride	µg/L	< 2.8		< 0.32	< 2.3	< 1.4
1,1,2,2-Tetrachloroethane	µg/L	< 6.9		< 0.22	< 5.5	< 2.9
Tetrachloroethene	µg/L	< 4.1		< 0.26	< 3.3	< 1.8
Toluene	µg/L	< 6		< 0.12	< 5	< 3
1,1,2-Trichloroethane	µg/L	< 5		< 0.3	< 4	< 3
Trichloroethene	µg/L	< 1.9		< 0.21	< 1.6	< 0.92
Vinyl Chloride	µg/L	< 1.8		< 0.24	< 1.5	< 0.88
Acenaphthene	µg/L	< 5		< 0.33	< 4	< 3
Anthracene	µg/L	< 5		< 0.34	< 4	< 3
Benzidine	µg/L	< 5		< 22.4	< 9	< 20
Benzo(a)anthracene	µg/L	< 5		< 0.3	< 4	< 3
Benzo(a)pyrene	µg/L	< 5		< 0.36	< 4	< 3
Benzo(b)fluoranthene	µg/L	< 5		< 0.41	< 4	< 3
Benzo(k)fluoranthene	µg/L	< 5		< 0.38	< 4	< 3
Butylbenzylphthalate	µg/L	< 5		< 0.33	< 4	< 3
bis(2-Chloroethyl)ether	µg/L	< 5		< 0.35	< 4	< 3
bis(2-Chloroisopropyl)ether	µg/L	< 5		< 0.5	< 5	< 3
2-Chloronaphthalene	µg/L	< 5		< 0.34	< 4	< 3

Table 4
Blended Pond D Comingled Water, Outfall 502, and Outfall 004

Parameters	Units	Outfall 004		Pond D Surface Water	Outfall 004 + Outfall 502	Pond D Comingled Water + 004 + 502
		Presumed Maximum Day	Presumed Long Term Average	Presumed Average	Presumed Weighted Average	Presumed Weighted Average
2-Chlorophenol	µg/L	< 5		< 0.59	< 5	< 3
Chrysene	µg/L	< 5		< 0.35	< 4	< 3
Di-n-Butylphthalate	µg/L	< 5		< 0.31	< 4	< 3
Dibenzo(a,h)anthracene	µg/L	< 5		< 0.29	< 4	< 3
3,3-Dichlorobenzidine	µg/L	< 5		< 2.8	< 5	< 4
2,4-Dichlorophenol	µg/L	< 5		< 0.46	< 5	< 3
Diethylphthalate	µg/L	< 5		< 0.3	< 4	< 3
2,4-Dimethylphenol	µg/L	< 5		< 2.9	< 5	< 4
Dimethylphthalate	µg/L	< 5		< 0.38	< 4	< 3
2,4-Dinitrophenol	µg/L	< 5		< 2.3	< 5	< 4
2,4-Dinitrotoluene	µg/L	< 5		< 0.38	< 4	< 3
1,2-Diphenylhydrazine	µg/L	< 0.1		< 0.32	< 0.2	< 0.3
bis(2-Ethylhexyl)phthalate	µg/L	< 5		< 0.35	< 4	< 3
Fluoranthene	µg/L	< 5		< 0.25	< 4	< 3
Fluorene	µg/L	< 5		< 0.37	< 4	< 3
Hexachlorobenzene	µg/L	< 5		< 0.3	< 4	< 3
Hexachlorobutadiene	µg/L	< 5		< 0.29	< 4	< 3
Hexachlorocyclopentadiene	µg/L	< 5		< 1	< 5	< 4
Hexachloroethane	µg/L	< 5		< 0.32	< 4	< 3
Indeno(1,2,3-cd)pyrene	µg/L	< 5		< 0.29	< 4	< 3
Isophorone	µg/L	< 5		< 0.38	< 4	< 3
2-Methyl-4,6-dinitrophenol	µg/L	< 50		< 1.3	< 40	< 21
Nitrobenzene	µg/L	< 5		< 0.7	< 5	< 3
N-Nitrosodimethylamine	µg/L	< 5		< 0.45	< 5	< 3
N-Nitroso-di-n-propylamine	µg/L	< 5		< 0.54	< 5	< 3
N-Nitrosodiphenylamine	µg/L	< 5		< 1	< 5	< 4
Pentachlorophenol	µg/L	< 5		< 1.8	< 5	< 4
Phenol	µg/L	< 5		< 0.23	< 4	< 3
Pyrene	µg/L	< 5		< 0.35	< 4	< 3
1,2,4-Trichlorobenzene	µg/L	< 5		< 0.26	< 4	< 3
2,4,6-Trichlorophenol	µg/L	< 5		< 0.36	< 4	< 3
Kepone	µg/L	< 0.1		< 1.8	< 0.5	< 2
FIELD PARAMETERS						
pH (Field)	pH_Units	7.38		8.05	7.48	7.68
Temperature	° C	34.6		31.43	32.0	31.8
Conductivity	µs/cm			842		
Dissolved Oxygen	%			127.70		

Table 4
Blended Pond D Comingled Water, Outfall 502, and Outfall 004

Parameters	Units	Outfall 004		Pond D Surface Water	Outfall 004 + Outfall 502	Pond D Comingled Water + 004 + 502
		Presumed Maximum Day	Presumed Long Term Average	Presumed Average	Presumed Weighted Average	Presumed Weighted Average
Dissolved Oxygen	mg/l			10.25		
ORP	mv			140.10		
Chlorine, Total Residual	ppm	< 0.1	< 0.1	0.07	< 0.1	< 0.1

Footnotes:

1) ND- Not detected above the laboratory detection limit.
2) NA- Not analyzed.
3) mg/L - milligrams per liter.
4) µg/L- micrograms per liter.
5) µS/cm - microsiemens/centimeter.
6) mv- millivolts.
7) ppm- parts per million.
8) ORP- Oxidation Reduction Potential.
9) Outfall maximum and long term average data is from the 2013 permit application for reissuance of Possum Point's VPDES Permit.
10) Presumed weighted average of Pond D Comingled Water, Low Volume Settling Ponds (Outfall 004), and Outfall 502 Water is based on 2.53-mgd Pond D Comingled Water decant/pump rate (i.e., same as existing max 30-day flow for Outfall 005) and a sum of the long term average rates in the 2013 permit reissuance application for Outfall 004 + Outfall 502, or 2.59-MGD.

Table 5
Blended Pond D Comingled Water and Outfall 001/002

Parameters	Units	Outfall 001/002		Pond D Surface Water	Pond D Comingled Water + 001/002
		Presumed Maximum Day	Presumed Long Term Average	Presumed Average	Presumed Weighted Average
Aluminum, Total	mg/L	< 0.09		0.10	< 0.10
Aluminum, Dissolved	mg/L	< 0.09		< 0.026	< 0.09
Antimony, Total	mg/L	< 0.001		0.0035	< 0.002
Antimony, Dissolved	mg/L	< 0.001		0.0036	< 0.002
Arsenic, Total	mg/L	< 0.003		0.019	< 0.004
Arsenic, Dissolved	mg/L	< 0.003		0.018	< 0.004
Boron, Total	mg/L	0.02		0.47	0.04
Boron, Dissolved	mg/L			0.47	
Barium, Total	mg/L	0.043		0.15	0.05
Barium, Dissolved	mg/L	0.038		0.15	0.05
Beryllium, Total	mg/L	< 0.0002		< 0.0001	< 0.0002
Beryllium, Dissolved	mg/L	< 0.0002		< 0.0001	< 0.0002
Cadmium, Total	mg/L	< 0.0003		< 0.00016	< 0.0003
Cadmium, Dissolved	mg/L	< 0.0003		< 0.00033	< 0.0004
Calcium, Total	mg/L			37.4	
Calcium, Dissolved	mg/L			37.2	
Chromium, Total	mg/L	< 0.001		< 0.00033	< 0.001
Chromium, Dissolved	mg/L	< 0.001		< 0.00066	< 0.001
Trivalent Chromium, Total	mg/L			< 0.01	
Trivalent Chromium, Dissolved	mg/L			< 0.01	
Hexavalent Chromium, Total	µg/L	< 0.005		< 0.052	< 0.007
Hexavalent Chromium, Dissolved	µg/L			< 0.052	
Cobalt, Total	mg/L	0.0007		< 0.00083	< 0.0008
Cobalt, Dissolved	mg/L	< 0.0006		< 0.0016	< 0.0007
Copper, Total	mg/L	0.011		< 0.00083	< 0.011
Copper, Dissolved	mg/L	0.008		< 0.0016	< 0.008
Iron, Total	mg/L	0.42		0.061	0.41
Iron, Dissolved	mg/L	< 0.05		< 0.02	< 0.05
Lead, Total	mg/L	< 0.001		< 0.00033	< 0.001
Lead, Dissolved	mg/L	< 0.001		< 0.00066	< 0.001
Lithium, Total	mg/L			< 0.016	
Lithium, Dissolved	mg/L			< 0.033	
Manganese, Total	mg/L	0.12		0.037	0.12
Manganese, Dissolved	mg/L	0.04		0.008	0.04
Magnesium, Total	mg/L	8.04		15	8.3
Magnesium, Dissolved	mg/L	7.82		14.4	8.01
Molybdenum, Total	mg/L	< 0.001		0.05	< 0.01

Table 5
Blended Pond D Comingled Water and Outfall 001/002

Parameters	Units	Outfall 001/002		Pond D Surface Water	Pond D Comingled Water + 001/002
		Presumed Maximum Day	Presumed Long Term Average	Presumed Average	Presumed Weighted Average
Molybdenum, Dissolved	mg/L	< 0.001		0.048	< 0.003
Mercury, Total	mg/L	< 0.0002		< 0.00016	< 0.0002
Mercury, Dissolved	mg/L	< 0.0002		< 0.00016	< 0.0002
Nickel, Total	mg/L	< 0.005		0.0028	< 0.005
Nickel, Dissolved	mg/L	< 0.005		< 0.0016	< 0.005
Selenium, Total	mg/L	< 0.003		0.0056	< 0.004
Selenium, Dissolved	mg/L	< 0.003		0.0058	< 0.004
Silver, Total	mg/L	< 0.0001		< 0.00033	< 0.0002
Silver, Dissolved	mg/L	< 0.0001		< 0.00066	< 0.0002
Thallium, Total	mg/L	< 0.0002		< 0.00016	< 0.0002
Thallium, Dissolved	mg/L	0.0002		< 0.00033	< 0.0003
Zinc, Total	mg/L	< 0.01		< 0.01	< 0.01
Zinc, Dissolved	mg/L	< 0.01		< 0.0016	< 0.01
Potassium, Total	mg/L			6.6	
Potassium, Dissolved	mg/L			6.6	
Sodium, Total	mg/L			40.6	
Sodium, Dissolved	mg/L			41	
Sulfate	mg/L	28.06		104	30.3
pH	pH_Units			8.0	
Specific Conductance	umhos/cm			550	
Turbidity	NTU			1.6	
Alkalinity, Total	mg/L			63	
Ammonia-N	mg/L	0.07		< 0.03	< 0.07
Nitrate-N	mg/L	2.47		< 0.037	2.41
Nitrite-N	mg/L			< 0.044	
Oil/Grease Hexane Extractable	mg/L	< 5		< 3	< 5
Total Kjeldahl Nitrogen	mg/L			< 0.4	
Total Nitrogen	mg/L			< 1.0	
Phosphorus, Total	mg/L	< 0.32		< 0.06	< 0.32
Chloride	mg/L	23.08		71.1	24.5
Fluoride	mg/L	0.11		0.5	0.2
Hardness	mg/L	111.15		153	113
Total Dissolved Solids	mg/L	305.5		355	307
Total Suspended Solids	mg/L	12.4		< 8	< 13
Biochemical Oxygen Demand	mg/L	< 3.0		< 0.8	< 3.0
Chlorine, Total Residual	mg/L			< 0.009	
Sulfide, Total	mg/L	< 0.05		< 0.35	< 0.06

Table 5
Blended Pond D Comingled Water and Outfall 001/002

Parameters	Units	Outfall 001/002		Pond D Surface Water	Pond D Comingled Water + 001/002
		Presumed Maximum Day	Presumed Long Term Average	Presumed Average	Presumed Weighted Average
Cyanide, Total	mg/L	< 0.01		< 0.00058	< 0.01
Aldrin	µg/L	< 0.05		< 0.0007	< 0.05
alpha-BHC	µg/L	< 0.05		< 0.00014	< 0.05
beta-BHC	µg/L	< 0.05		< 0.00017	< 0.05
delta-BHC	µg/L	< 0.05		< 0.00025	< 0.05
gamma-BHC	µg/L	< 0.05		< 0.00015	< 0.05
Chlordane	µg/L	< 0.2		< 0.013	< 0.2
4,4'-DDD	µg/L	< 0.1		< 0.00017	< 0.1
4,4'-DDE	µg/L	< 0.1		< 0.00017	< 0.1
4,4'-DDT	µg/L	< 0.1		< 0.00024	< 0.1
Dieldrin	µg/L	< 0.1		< 0.00014	< 0.1
Endosulfan I	µg/L	< 0.1		< 0.00029	< 0.1
Endosulfan II	µg/L	< 0.1		< 0.00015	< 0.1
Endosulfan Sulfate	µg/L	< 0.1		< 0.0003	< 0.1
Endrin	µg/L	< 0.1		< 0.00015	< 0.1
Endrin Aldehyde	µg/L	< 0.1		< 0.00032	< 0.1
Heptachlor	µg/L	< 0.05		< 0.0004	< 0.05
Heptachlor Epoxide	µg/L	< 0.1		< 0.00017	< 0.1
Methoxychlor	µg/L	< 0.1		< 0.00027	< 0.1
Mirex	µg/L	< 0.1		< 0.00057	< 0.1
Total Polychlorinated Biphenyl	µg/L			0	
Toxaphene	µg/L	< 5		< 0.01	< 5
Aroclor-1016	µg/L			< 0.042	
Aroclor-1221	µg/L			< 0.062	
Aroclor-1232	µg/L			< 0.077	
Aroclor-1242	µg/L			< 0.045	
Aroclor-1248	µg/L			< 0.036	
Aroclor-1254	µg/L			< 0.06	
Aroclor-1260	µg/L			< 0.042	
Azinphos Methyl	µg/L			< 0.35	
Chlorpyrifos	µg/L	< 0.2		< 0.47	< 0.3
Demeton	µg/L	< 1		< 0.3	< 1
Diazinon	µg/L	< 1		< 0.27	< 1
Malathion	µg/L	< 1		< 0.22	< 1
Parathion	µg/L	< 1		< 0.31	< 1
Acrolein	µg/L	< 10		< 2.4	< 10
Acrylonitrile	µg/L	< 1.5		< 0.89	< 1.5

Table 5
Blended Pond D Comingled Water and Outfall 001/002

Parameters	Units	Outfall 001/002		Pond D Surface Water	Pond D Comingled Water + 001/002
		Presumed Maximum Day	Presumed Long Term Average	Presumed Average	Presumed Weighted Average
Benzene	µg/L	< 4.4		< 0.16	< 4.3
Bromodichloromethane	µg/L	< 2.2		< 0.13	< 2.2
Bromoform	µg/L	< 4.7		< 0.21	< 4.6
Bromomethane	µg/L	< 1.4		< 0.27	< 1.4
Carbon Tetrachloride	µg/L	< 2.8		< 0.24	< 2.8
Chlorobenzene	µg/L	< 6		< 0.11	< 6
Chlorodibromomethane	µg/L	< 3.1		< 0.22	< 3.1
Chloroform	µg/L	< 1.6		< 0.15	< 1.6
1,2-Dichlorobenzene	µg/L	< 5		< 0.2	< 5
1,3-Dichlorobenzene	µg/L	< 5		< 0.14	< 5
1,4-Dichlorobenzene	µg/L	< 5		< 0.15	< 5
1,2-Dichloroethane	µg/L	< 2.8		< 0.22	< 2.8
1,1-Dichloroethene	µg/L	< 2.8		< 0.17	< 2.8
trans-1,2-Dichloroethene	µg/L	< 1.6		< 0.12	< 1.6
1,2-Dichloropropane	µg/L	< 6		< 0.24	< 6
cis-1,3-Dichloropropene	µg/L			< 0.12	
trans-1,3-Dichloropropene	µg/L			< 0.14	
1,3-Dichloropropene, Total	µg/L	< 5.9		< 0.19	< 5.8
Ethylbenzene	µg/L	< 7.2		< 0.16	< 7.0
Methylene Chloride	µg/L	< 2.8		< 0.32	< 2.8
1,1,2,2-Tetrachloroethane	µg/L	< 6.9		< 0.22	< 6.8
Tetrachloroethene	µg/L	< 4.1		< 0.26	< 4.0
Toluene	µg/L	< 6		< 0.12	< 6
1,1,2-Trichloroethane	µg/L	< 5		< 0.3	< 5
Trichloroethene	µg/L	< 1.9		< 0.21	< 1.9
Vinyl Chloride	µg/L	< 1.8		< 0.24	< 1.8
Acenaphthene	µg/L	< 10		< 0.33	< 10
Anthracene	µg/L	< 10		< 0.34	< 10
Benzidine	µg/L	< 6.3		< 22.4	< 6.8
Benzo(a)anthracene	µg/L	< 10		< 0.3	< 10
Benzo(a)pyrene	µg/L	< 10		< 0.36	< 10
Benzo(b)fluoranthene	µg/L	< 10		< 0.41	< 10
Benzo(k)fluoranthene	µg/L	< 10		< 0.38	< 10
Butylbenzylphthalate	µg/L	< 10		< 0.33	< 10
bis(2-Chloroethyl)ether	µg/L	< 10		< 0.35	< 10
bis(2-Chloroisopropyl)ether	µg/L	< 10		< 0.5	< 10
2-Chloronaphthalene	µg/L	< 10		< 0.34	< 10

Table 5
Blended Pond D Comingled Water and Outfall 001/002

Parameters	Units	Outfall 001/002		Pond D Surface Water	Pond D Comingled Water + 001/002
		Presumed Maximum Day	Presumed Long Term Average	Presumed Average	Presumed Weighted Average
2-Chlorophenol	µg/L	< 10		< 0.59	< 10
Chrysene	µg/L	< 10		< 0.35	< 10
Di-n-Butylphthalate	µg/L	< 10		< 0.31	< 10
Dibenzo(a,h)anthracene	µg/L	< 10		< 0.29	< 10
3,3-Dichlorobenzidine	µg/L	< 20		< 2.8	< 20
2,4-Dichlorophenol	µg/L	< 10		< 0.46	< 10
Diethylphthalate	µg/L	< 10		< 0.3	< 10
2,4-Dimethylphenol	µg/L	< 10		< 2.9	< 10
Dimethylphthalate	µg/L	< 10		< 0.38	< 10
2,4-Dinitrophenol	µg/L	< 10		< 2.3	< 10
2,4-Dinitrotoluene	µg/L	< 10		< 0.38	< 10
1,2-Diphenylhydrazine	µg/L	< 100		< 0.32	< 100
bis(2-Ethylhexyl)phthalate	µg/L	< 10		< 0.35	< 10
Fluoranthene	µg/L	< 10		< 0.25	< 10
Fluorene	µg/L	< 10		< 0.37	< 10
Hexachlorobenzene	µg/L	< 10		< 0.3	< 10
Hexachlorobutadiene	µg/L	< 10		< 0.29	< 10
Hexachlorocyclopentadiene	µg/L	< 10		< 1	< 10
Hexachloroethane	µg/L	< 10		< 0.32	< 10
Indeno(1,2,3-cd)pyrene	µg/L	< 10		< 0.29	< 10
Isophorone	µg/L	< 10		< 0.38	< 10
2-Methyl-4,6-dinitrophenol	µg/L	< 50		< 1.3	< 50
Nitrobenzene	µg/L	< 10		< 0.7	< 10
N-Nitrosodimethylamine	µg/L	< 10		< 0.45	< 10
N-Nitroso-di-n-propylamine	µg/L	< 10		< 0.54	< 10
N-Nitrosodiphenylamine	µg/L	< 10		< 1	< 10
Pentachlorophenol	µg/L	< 50		< 1.8	< 50
Phenol	µg/L	< 10		< 0.23	< 10
Pyrene	µg/L	< 10		< 0.35	< 10
1,2,4-Trichlorobenzene	µg/L	< 10		< 0.26	< 10
2,4,6-Trichlorophenol	µg/L	< 10		< 0.36	< 10
Kepone	µg/L	< 0.1		< 1.8	< 0.2
FIELD PARAMETERS					
pH (Field)	pH_Units	8.4		8.05	8.4
Temperature	° C	39.1		31.43	38.9
Conductivity	µs/cm			842	
Dissolved Oxygen	%			127.70	

Table 5
Blended Pond D Comingled Water and Outfall 001/002

Parameters	Units	Outfall 001/002		Pond D Surface Water	Pond D Comingled Water + 001/002
		Presumed Maximum Day	Presumed Long Term Average	Presumed Average	Presumed Weighted Average
Dissolved Oxygen	mg/l			10.25	
ORP	mv			140.10	
Chlorine, Total Residual	ppm	< 0.1	< 0.1	0.07	< 0.1

Footnotes:

1) ND- Not detected above the laboratory detection limit.
2) NA- Not analyzed.
3) mg/L - milligrams per liter.
4) µg/L- micrograms per liter.
5) µS/cm - microsiemens/centimeter.
6) mv- millivolts.
7) ppm- parts per million.
8) ORP- Oxidation Reduction Potential.
9) Outfall maximum and long term average data is from the 2013 permit application for reissuance of Possum Point's VPDES Permit.
10) Presumed weighted average of Pond D Comingled Water and Outfall 001/002 Water is based on 2.53-mgd Pond D Comingled Water decant/pump rate (i.e., same as existing max 30-day flow for Outfall 005) and a long term average flow in the 2013 permit reissuance application of 86.38-MGD for Outfall 001/002.

Table 6
Blended Ash Dewatering and Contact Waters

Parameters	Units	Outfall 005		Contact Waters	Pond E Well				Dewatering & Contact Waters
		Presumed Maximum Day	Presumed Long Term Average	Pond E 5/5/2015	Well Discharge 1 5/11/2015	Well Discharge 2 5/12/2015	Well Discharge 3 5/13/2015	Presumed Average Dewatering	Presumed Weighted Average
Aluminum, Total	mg/L	< 0.09		0.11	NA	0.059	NA	0.059	0.07
Aluminum, Dissolved	mg/L	< 0.09		< 0.026	NA	< 0.026	NA	< 0.026	< 0.026
Antimony, Total	mg/L	0.001		0.0034	< 0.00033	< 0.00033	< 0.00033	< 0.00033	< 0.0008
Antimony, Dissolved	mg/L	0.001		0.0034	< 0.00066	< 0.00066	< 0.00066	< 0.00066	< 0.0011
Arsenic, Total	mg/L	0.011		0.018	1.1	0.92	1.2	1.1	0.96
Arsenic, Dissolved	mg/L	0.01		0.017	0.88	0.81	0.9	0.4	0.4
Boron, Total	mg/L	0.06		0.45	NA	1.3	NA	1.3	1.2
Boron, Dissolved	mg/L			0.47	NA	1.4	NA	1.4	1.3
Barium, Total	mg/L	0.208		0.14	0.4	0.33	0.42	0.4	0.4
Barium, Dissolved	mg/L	0.19		0.14	0.37	0.36	0.38	0.37	0.34
Beryllium, Total	mg/L	< 0.0002		< 0.0001	NA	< 0.0001	NA	< 0.0001	< 0.0001
Beryllium, Dissolved	mg/L	< 0.0002		< 0.0001	NA	< 0.0001	NA	< 0.0001	< 0.0001
Cadmium, Total	mg/L	< 0.0003		< 0.00016	< 0.00016	< 0.00016	< 0.00016	< 0.00016	< 0.00016
Cadmium, Dissolved	mg/L	< 0.0003		< 0.00033	< 0.00033	< 0.00033	< 0.00033	< 0.00033	< 0.00033
Calcium, Total	mg/L			35.5	NA	112	NA	66.8	62.7
Calcium, Dissolved	mg/L			37.4	NA	117	NA	64.7	61.2
Chromium, Total	mg/L	< 0.02		< 0.00033	< 0.00033	< 0.00033	< 0.00033	< 0.00033	< 0.00033
Chromium, Dissolved	mg/L	< 0.001		< 0.00066	0.0026	0.0024	0.0025	0.0025	0.0023
Trivalent Chromium, Total	mg/L			< 0.01	< 0.01	< 0.01	< 0.01	< 0.01	< 0.01
Trivalent Chromium, Dissolved	mg/L			< 0.01	NA	< 0.01	< 0.01	< 0.01	< 0.01
Hexavalent Chromium, Total	µg/L	< 5		< 0.052	< 0.052	< 0.052	< 0.052	< 0.052	< 0.052
Hexavalent Chromium, Dissolved	µg/L			< 0.052	NA	< 0.052	< 0.052	< 0.052	< 0.052
Cobalt, Total	mg/L	< 0.0006		< 0.00083	NA	< 0.00083	NA	0.016	< 0.015
Cobalt, Dissolved	mg/L	< 0.0006		< 0.0016	NA	< 0.0016	NA	< 0.0016	< 0.0016
Copper, Total	mg/L	0.001		< 0.00083	< 0.00083	< 0.00083	< 0.00083	< 0.00083	< 0.00083

gai consultants
transforming ideas into reality

00022326

Table 6
Blended Ash Dewatering and Contact Waters

Parameters	Units	Outfall 005		Contact Waters	Pond E Well				Dewatering & Contact Waters
		Presumed Maximum Day	Presumed Long Term Average	Pond E 5/5/2015	Well Discharge 1 5/11/2015	Well Discharge 2 5/12/2015	Well Discharge 3 5/13/2015	Presumed Average Dewatering	Presumed Weighted Average
Copper, Dissolved	mg/L	< 0.001		< 0.0016	< 0.0016	< 0.0016	< 0.0016	< 0.0016	< 0.0016
Iron, Total	mg/L	0.26		0.054	11.2	10.3	11.8	6.2	5.5
Iron, Dissolved	mg/L	0.06		< 0.02	5.6	4.9	7.1	5.9	< 5.2
Lead, Total	mg/L	< 0.001		< 0.00033	< 0.00033	< 0.00033	< 0.00033	< 0.00033	< 0.00033
Lead, Dissolved	mg/L	< 0.001		< 0.00066	< 0.00066	< 0.00066	< 0.00066	< 0.00066	< 0.00066
Lithium, Total	mg/L			< 0.016	NA	0.27	NA	0.27	< 0.24
Lithium, Dissolved	mg/L			< 0.033	NA	0.27	NA	0.27	< 0.24
Manganese, Total	mg/L	0.08		0.026	0.81	0.67	0.88	0.79	0.69
Manganese, Dissolved	mg/L	0.06		0.0075	0.82	0.83	0.88	0.85	0.74
Magnesium, Total	mg/L	15.1		13.4	NA	29.3	NA	29.3	27.3
Magnesium, Dissolved	mg/L	15.38		14.2	NA	31.5	NA	31.5	29.3
Molybdenum, Total	mg/L	0.006		0.049	NA	0.097	NA	0.097	0.091
Molybdenum, Dissolved	mg/L	0.006		0.046	NA	0.08	NA	0.08	0.08
Mercury, Total	mg/L	< 0.0002		< 0.00016	< 0.00016	< 0.00016	< 0.00016	< 0.00016	< 0.00016
Mercury, Dissolved	mg/L	< 0.0002		< 0.00016	< 0.00016	< 0.00016	< 0.00016	< 0.00016	< 0.00016
Nickel, Total	mg/L	0.013		0.0029	0.0081	0.0064	0.0082	0.0076	0.0070
Nickel, Dissolved	mg/L	0.01		< 0.0016	0.008	0.0076	0.0076	0.008	< 0.008
Selenium, Total	mg/L	< 0.003		0.0056	< 0.00066	< 0.00066	< 0.00066	<0.00066	< 0.0014
Selenium, Dissolved	mg/L	<0.003		0.0062	< 0.0016	< 0.0016	< 0.0016	<0.0016	< 0.0023
Silver, Total	mg/L	< 0.0001		< 0.00033	< 0.00033	< 0.00033	< 0.00033	< 0.00033	< 0.00033
Silver, Dissolved	mg/L	< 0.0001		< 0.00066	< 0.00066	< 0.00066	< 0.00066	< 0.00066	< 0.00066
Thallium, Total	mg/L	0.0005		< 0.00016	< 0.00016	< 0.00016	< 0.00016	< 0.00016	< 0.00016
Thallium, Dissolved	mg/L	0.0004		< 0.00033	< 0.00033	< 0.00033	< 0.00033	< 0.00033	< 0.00033
Zinc, Total	mg/L	0.01		0.01	0.026	0.016	0.016	0.020	0.02
Zinc, Dissolved	mg/L	< 0.01		< 0.0016	0.012	0.19	0.011	0.08	< 0.07

Table 6
Blended Ash Dewatering and Contact Waters

Parameters	Units	Outfall 005		Contact Waters	Pond E Well				Dewatering & Contact Waters
		Presumed Maximum Day	Presumed Long Term Average	Pond E 5/5/2015	Well Discharge 1 5/11/2015	Well Discharge 2 5/12/2015	Well Discharge 3 5/13/2015	Presumed Average Dewatering	Presumed Weighted Average
Potassium, Total	mg/L			6.2	NA	9.8	NA	9.8	9.4
Potassium, Dissolved	mg/L			6.6	NA	10.1	NA	10.1	9.7
Sodium, Total	mg/L			38.3	NA	106	NA	106	97.2
Sodium, Dissolved	mg/L			40.1	NA	113	NA	113	104
Sulfate	mg/L	40.69		93.6	NA	16.2	NA	16.2	26.4
pH	pH_Units	7.4		7.9	7.77	7.88	7.76	7.81	7.9
Specific Conductance	umhos/cm			537	NA	1370	NA	1370	1270
Turbidity	NTU			1.18	NA	123	NA	123	108
Alkalinity, Total	mg/L			61	NA	395	NA	395	360
Ammonia-N	mg/L	< 0.05	< 0.05	< 0.03	0.306	0.322	0.287	0.305	< 0.27
Nitrate-N	mg/L	0.1	1.00	< 0.037	< 0.092	< 0.092	< 0.092	< 0.092	< 0.085
Nitrite-N	mg/L			< 0.044	NA	< 0.11	NA	< 0.11	< 0.11
Oil/Grease Hexane Extractable	mg/L	< 5	< 5	6.3	< 0.5	< 0.5	< 0.5	< 0.5	< 2
Total Kjeldahl Nitrogen	mg/L			< 0.4	NA	< 0.4	NA	< 0.4	< 0.4
Total Nitrogen	mg/L			< 1.0	NA	< 1.0	NA	< 1.0	< 1.0
Phosphorus, Total	mg/L	< 0.05	< 0.05	< 0.019	NA	0.37	NA	0.37	< 0.33
Chloride	mg/L	153.19		71.8	234	251	247	198	182
Fluoride	mg/L	0.142		0.5	NA	2.9	NA	2.9	3
Hardness	mg/L	129.96		144	463	401	417	427	390
Total Dissolved Solids	mg/L	452		367	NA	800	NA	800	744
Total Suspended Solids	mg/L	13.4	6.27	9	34	19	20	25	23
Biochemical Oxygen Demand	mg/L	< 12.6		< 0.8	NA	< 0.8	NA	<0.8	< 0.8
Chlorine, Total Residual	mg/L	< 0.1	< 0.1	< 0.009	NA	< 0.009	NA	< 0.009	< 0.009
Sulfide, Total	mg/L	< 0.05		< 0.35	NA	< 0.35	NA	< 0.35	< 0.35
Cyanide, Total	mg/L	< 0.01		< 0.00058	NA	< 0.00058	NA	< 0.00058	< 0.00058

gai consultants
transforming ideas into reality

00022328

Table 6
Blended Ash Dewatering and Contact Waters

Parameters	Units	Outfall 005		Contact Waters	Pond E Well				Dewatering & Contact Waters
		Presumed Maximum Day	Presumed Long Term Average	Pond E 5/5/2015	Well Discharge 1 5/11/2015	Well Discharge 2 5/12/2015	Well Discharge 3 5/13/2015	Presumed Average Dewatering	Presumed Weighted Average
Aldrin	µg/L	< 0.05		< 0.0006	NA	< 0.00061	NA	< 0.00061	< 0.0007
alpha-BHC	µg/L	< 0.05		< 0.00013	NA	< 0.00013	NA	< 0.00013	< 0.00013
beta-BHC	µg/L	< 0.05		< 0.00016	NA	< 0.00016	NA	< 0.00016	< 0.00016
delta-BHC	µg/L	< 0.05		< 0.00024	NA	< 0.00025	NA	< 0.00025	< 0.00025
gamma-BHC	µg/L	< 0.05		< 0.00015	NA	< 0.00015	NA	< 0.00015	< 0.00015
Chlordane	µg/L	< 0.2		< 0.013	NA	< 0.013	NA	< 0.013	< 0.013
4,4'-DDD	µg/L	< 0.1		< 0.00016	NA	< 0.00016	NA	< 0.00016	< 0.00016
4,4'-DDE	µg/L	< 0.1		< 0.00016	NA	< 0.00016	NA	< 0.00016	< 0.00016
4,4'-DDT	µg/L	< 0.1		< 0.00023	NA	< 0.00023	NA	< 0.00023	< 0.00023
Dieldrin	µg/L	< 0.1		< 0.00013	NA	< 0.00013	NA	< 0.00013	< 0.00013
Endosulfan I	µg/L	< 0.1		< 0.00028	NA	< 0.00028	NA	< 0.00028	< 0.00028
Endosulfan II	µg/L	< 0.1		< 0.00014	NA	< 0.00014	NA	< 0.00014	< 0.00014
Endosulfan Sulfate	µg/L	< 0.1		< 0.0002	NA	< 0.0002	NA	< 0.0002	< 0.0002
Endrin	µg/L	< 0.1		< 0.00015	NA	< 0.00015	NA	< 0.00015	< 0.00015
Endrin Aldehyde	µg/L			< 0.00031	NA	< 0.00031	NA	< 0.00031	< 0.00031
Heptachlor	µg/L	< 0.05		< 0.0003	NA	< 0.0003	NA	< 0.0003	< 0.0003
Heptachlor Epoxide	µg/L	< 0.1		< 0.00016	NA	< 0.00016	NA	< 0.00016	< 0.00016
Methoxychlor	µg/L	< 0.1		< 0.00026	NA	< 0.00026	NA	< 0.00026	< 0.00026
Mirex	µg/L	< 0.1		< 0.00056	NA	< 0.00056	NA	< 0.00056	< 0.00056
Total Polychlorinated Biphenyl	µg/L			0	NA	0	NA	0	0
Toxaphene	µg/L	< 5		< 0.0098	NA	< 0.0099	NA	< 0.0099	< 0.0099
Aroclor-1016	µg/L			< 0.041	NA	< 0.041	NA	< 0.041	< 0.041
Aroclor-1221	µg/L			< 0.061	NA	< 0.062	NA	< 0.062	< 0.062
Aroclor-1232	µg/L			< 0.076	NA	< 0.077	NA	< 0.077	< 0.077
Aroclor-1242	µg/L			< 0.044	NA	< 0.045	NA	< 0.045	< 0.045

Table 6
Blended Ash Dewatering and Contact Waters

Parameters	Units	Outfall 005		Contact Waters	Pond E Well				Dewatering & Contact Waters
		Presumed Maximum Day	Presumed Long Term Average	Pond E 5/5/2015	Well Discharge 1 5/11/2015	Well Discharge 2 5/12/2015	Well Discharge 3 5/13/2015	Presumed Average Dewatering	Presumed Weighted Average
Aroclor-1248	µg/L			< 0.035	NA	< 0.036	NA	< 0.036	< 0.036
Aroclor-1254	µg/L			< 0.057	NA	< 0.058	NA	< 0.058	< 0.058
Aroclor-1260	µg/L			< 0.041	NA	< 0.041	NA	< 0.041	< 0.041
Azinphos Methyl	µg/L	< 2		< 0.34	NA	< 0.35	NA	< 0.35	< 0.35
Chlorpyrifos	µg/L	< 0.2		< 0.46	NA	< 0.47	NA	< 0.47	< 0.47
Demeton	µg/L	< 1		< 0.2	NA	< 0.21	NA	< 0.21	< 0.3
Diazinon	µg/L	< 1		< 0.27	NA	< 0.27	NA	< 0.27	< 0.27
Malathion	µg/L	< 1		< 0.21	NA	< 0.21	NA	< 0.21	< 0.21
Parathion	µg/L	< 1		< 0.31	NA	< 0.31	NA	< 0.31	< 0.31
Acrolein	µg/L	< 10		< 2.4	NA	< 2.4	NA	< 2.4	< 2.4
Acrylonitrile	µg/L	< 1.5		< 0.89	NA	< 0.89	NA	< 0.89	< 0.89
Benzene	µg/L	< 4.4		< 0.16	NA	< 0.16	NA	< 0.16	< 0.16
Bromodichloromethane	µg/L	< 2.2		< 0.13	NA	< 0.13	NA	< 0.13	< 0.13
Bromoform	µg/L	< 4.7		< 0.21	NA	< 0.21	NA	< 0.21	< 0.21
Bromomethane	µg/L	< 1.4		< 0.27	NA	< 0.27	NA	< 0.27	< 0.27
Carbon Tetrachloride	µg/L	< 2.8		< 0.24	NA	< 0.24	NA	< 0.24	< 0.24
Chlorobenzene	µg/L	< 6		< 0.11	NA	< 0.11	NA	< 0.11	< 0.11
Chlorodibromomethane	µg/L	< 3.1		< 0.22	NA	< 0.22	NA	< 0.22	< 0.22
Chloroform	µg/L	< 16		< 0.15	NA	< 0.15	NA	< 0.15	< 0.15
1,2-Dichlorobenzene	µg/L	< 5		< 0.2	NA	< 0.2	NA	< 0.2	< 0.2
1,3-Dichlorobenzene	µg/L	< 5		< 0.14	NA	< 0.14	NA	< 0.14	< 0.14
1,4-Dichlorobenzene	µg/L	< 5		< 0.15	NA	< 0.15	NA	< 0.15	< 0.15
1,2-Dichloroethane	µg/L	< 2.8		< 0.22	NA	< 0.22	NA	< 0.22	< 0.22
1,1-Dichloroethene	µg/L	< 2.8		< 0.17	NA	< 0.17	NA	< 0.17	< 0.17
trans-1,2-Dichloroethene	µg/L	< 1.6		< 0.12	NA	< 0.12	NA	< 0.12	< 0.12

gai consultants
transforming ideas into reality

00022330

Table 6
Blended Ash Dewatering and Contact Waters

Parameters	Units	Outfall 005		Contact Waters	Pond E Well				Dewatering & Contact Waters
		Presumed Maximum Day	Presumed Long Term Average	Pond E 5/5/2015	Well Discharge 1 5/11/2015	Well Discharge 2 5/12/2015	Well Discharge 3 5/13/2015	Presumed Average Dewatering	Presumed Weighted Average
1,2-Dichloropropane	µg/L	< 6		< 0.24	NA	< 0.24	NA	< 0.24	< 0.24
cis-1,3-Dichloropropene	µg/L			< 0.12	NA	< 0.12	NA	< 0.12	< 0.12
trans-1,3-Dichloropropene	µg/L			< 0.14	NA	< 0.14	NA	< 0.14	< 0.14
1,3-Dichloropropene, Total	µg/L	< 5.9		< 0.19	NA	< 0.19	NA	< 0.19	< 0.19
Ethylbenzene	µg/L	< 7.2		< 0.16	NA	< 0.16	NA	< 0.16	< 0.16
Methylene Chloride	µg/L	< 2.8		< 0.32	NA	< 0.32	NA	< 0.32	< 0.32
1,1,2,2-Tetrachloroethane	µg/L	< 6.9		< 0.22	NA	< 0.22	NA	< 0.22	< 0.22
Tetrachloroethene	µg/L	< 4.1		< 0.26	NA	< 0.26	NA	< 0.26	< 0.26
Toluene	µg/L	< 6		< 0.12	NA	< 0.12	NA	< 0.12	< 0.12
1,1,2-Trichloroethane	µg/L	< 5		< 0.3	NA	< 0.3	NA	< 0.3	< 0.3
Trichloroethene	µg/L	< 1.9		< 0.21	NA	< 0.21	NA	< 0.21	< 0.21
Vinyl Chloride	µg/L	< 1.8		< 0.24	NA	< 0.24	NA	< 0.24	< 0.24
Acenaphthene	µg/L	< 5		< 0.33	NA	< 0.33	NA	< 0.33	< 0.33
Anthracene	µg/L	< 5		< 0.33	NA	< 0.34	NA	< 0.34	< 0.34
Benzidine	µg/L	< 5		< 22.3	NA	< 22.4	NA	< 22.4	< 22.4
Benzo(a)anthracene	µg/L	< 5		< 0.3	NA	< 0.3	NA	< 0.3	< 0.3
Benzo(a)pyrene	µg/L	< 5		< 0.35	NA	< 0.36	NA	< 0.36	< 0.36
Benzo(b)fluoranthene	µg/L	< 5		< 0.41	NA	< 0.41	NA	< 0.41	< 0.41
Benzo(k)fluoranthene	µg/L	< 5		< 0.37	NA	< 0.37	NA	< 0.37	< 0.37
Butylbenzylphthalate	µg/L	< 5		< 0.33	NA	< 0.33	NA	< 0.33	< 0.33
bis(2-Chloroethyl)ether	µg/L	< 5		< 0.34	NA	< 0.35	NA	< 0.35	< 0.35
bis(2-Chloroisopropyl)ether	µg/L	< 5		< 0.49	NA	< 0.5	NA	< 0.5	< 0.5
2-Chloronaphthalene	µg/L	< 5		< 0.33	NA	< 0.34	NA	< 0.34	< 0.34
2-Chlorophenol	µg/L	< 5		< 0.59	NA	< 0.59	NA	< 0.59	< 0.59
Chrysene	µg/L	< 5		< 0.34	NA	< 0.35	NA	< 0.35	< 0.35

gai consultants
transforming ideas into reality

00022331

Table 6
Blended Ash Dewatering and Contact Waters

Parameters	Units	Outfall 005		Contact Waters	Pond E Well				Dewatering & Contact Waters
		Presumed Maximum Day	Presumed Long Term Average	Pond E 5/5/2015	Well Discharge 1 5/11/2015	Well Discharge 2 5/12/2015	Well Discharge 3 5/13/2015	Presumed Average Dewatering	Presumed Weighted Average
Di-n-Butylphthalate	µg/L	< 5		< 0.31	NA	< 0.31	NA	< 0.31	< 0.31
Dibenzo(a,h)anthracene	µg/L	< 5		< 0.29	NA	< 0.29	NA	< 0.29	< 0.29
3,3-Dichlorobenzidine	µg/L	< 5		< 2.8	NA	< 2.8	NA	< 2.8	< 2.8
2,4-Dichlorophenol	µg/L	< 5		< 0.46	NA	< 0.46	NA	< 0.46	< 0.46
Diethylphthalate	µg/L	< 5		< 0.3	NA	< 0.3	NA	< 0.3	< 0.3
2,4-Dimethylphenol	µg/L	< 5		< 2.9	NA	< 2.9	NA	< 2.9	< 2.9
Dimethylphthalate	µg/L	< 5		< 0.37	NA	< 0.37	NA	< 0.37	< 0.37
2,4-Dinitrophenol	µg/L	< 5		< 2.3	NA	< 2.3	NA	< 2.3	< 2.3
2,4-Dinitrotoluene	µg/L	< 5		< 0.37	NA	< 0.37	NA	< 0.37	< 0.37
1,2-Diphenylhydrazine	µg/L	< 5		< 0.32	NA	< 0.32	NA	< 0.32	< 0.32
bis(2-Ethylhexyl)phthalate	µg/L	< 5		< 0.34	NA	< 0.35	NA	< 0.35	< 0.35
Fluoranthene	µg/L	< 5		< 0.25	NA	< 0.25	NA	< 0.25	< 0.25
Fluorene	µg/L	< 5		< 0.36	NA	< 0.36	NA	< 0.36	< 0.36
Hexachlorobenzene	µg/L	< 5		< 0.3	NA	< 0.3	NA	< 0.3	< 0.3
Hexachlorobutadiene	µg/L	< 5		< 0.29	NA	< 0.29	NA	< 0.29	< 0.29
Hexachlorocyclopentadiene	µg/L	< 5		< 1	NA	< 1	NA	< 1	< 1
Hexachloroethane	µg/L	< 5		< 0.32	NA	< 0.32	NA	< 0.32	< 0.32
Indeno(1,2,3-cd)pyrene	µg/L	< 5		< 0.29	NA	< 0.29	NA	< 0.29	< 0.29
Isophorone	µg/L	< 5		< 0.38	NA	< 0.38	NA	< 0.38	< 0.38
2-Methyl-4,6-dinitrophenol	µg/L			< 1.3	NA	< 1.3	NA	< 1.3	< 1.3
Nitrobenzene	µg/L	< 5		< 0.62	NA	< 0.61	NA	< 0.61	< 0.62
N-Nitrosodimethylamine	µg/L	< 5		< 0.45	NA	< 0.45	NA	< 0.45	< 0.45
N-Nitroso-di-n-propylamine	µg/L	< 5		< 0.53	NA	< 0.53	NA	< 0.53	< 0.53
N-Nitrosodiphenylamine	µg/L	< 5		< 1	NA	< 1	NA	< 1	< 1
Pentachlorophenol	µg/L	< 5		< 1.8	NA	< 1.8	NA	< 1.8	< 1.8

gai consultants

00022332

Table 6
Blended Ash Dewatering and Contact Waters

Parameters	Units	Outfall 005		Contact Waters	Pond E Well				Dewatering & Contact Waters
		Presumed Maximum Day	Presumed Long Term Average	Pond E 5/5/2015	Well Discharge 1 5/11/2015	Well Discharge 2 5/12/2015	Well Discharge 3 5/13/2015	Presumed Average Dewatering	Presumed Weighted Average
Phenol	µg/L	< 5		< 0.22	NA	< 0.22	NA	< 0.22	< 0.22
Pyrene	µg/L	< 5		< 0.34	NA	< 0.35	NA	< 0.35	< 0.35
1,2,4-Trichlorobenzene	µg/L	< 5		< 0.26	NA	< 0.26	NA	< 0.26	< 0.26
2,4,6-Trichlorophenol	µg/L	< 5		< 0.35	NA	< 0.36	NA	< 0.36	< 0.36
Kepone	µg/L	< 0.1		< 1.8	NA	< 1.8	NA	< 1.8	< 1.8
FIELD PARAMETERS									
pH (Field)	pH_Units	7.4		8.07	7.63	7.5	7.24	7.5	7.6
Temperature	° C	29.2		29.98	18.16	18.65	16.36	17.73	19.34
Conductivity	µs/cm			565	1233	1236	1172	1214	1130
Dissolved Oxygen	%			127.7	81.8	79.1	72.3	77.8	84.4
Dissolved Oxygen	mg/l			10.25	7.66	7.33	7.03	7.34	7.73
ORP	mv			140.1	-147.1	-157.6	-152.9	-152.6	-114.2
Chlorine, Total Residual	ppm	< 0.1	< 0.1	0.06	0.00	0.00	0.00	0.00	0.01

Footnotes:

1) ND- Not detected above the laboratory detection limit.
2) NA- Not analyzed.
3) mg/L - milligrams per liter.
4) µg/L- micrograms per liter.
5) µS/cm - microsiemens/centimeter.
6) mv- millivolts.
7) ppm- parts per million.
8) ORP- Oxidation Reduction Potential.
9) Outfall maximum and long term average data is from the 2013 permit application for reissuance of Possum Point's VPDES Permit.
10) Presumed weighted average of Dewatering & Contact Waters is based on projected 333-gpm Pond D and 203-gpm Ponds A, B, & C ash dewatering rates as well as projected 70-gpm Pond D and 11-gpm Ponds A, B, & C contact water rates.

Table 7
Ponds A, B, C, and D Dewatering and Contact Water Estimated Pumping Rates

Pond D

		In-situ Ash Water					Stormwater Infiltration				Pump Rate	
Ash Dewatering	**Presumed Average Conditions**	Porosity	Initial Degree of Saturation	Final Degree of Saturation	Estimated Ash Volume (CY)	In-Situ Volume to be Dewatered (million gallons)	Area of Ash (AC)	Off Ash Area Unable to be Diverted (AC)	Monthly Runoff Volume on Ash (million gallons)	Monthly Rainfall Volume from Off Ash Areas (million gallons)	Assumed Pump Time (Month)	Required Pumping Rate (GPM)
		0.3	1	0.2	468,900	22.73	28.9	22.9	2.8	0.2	2	**333**

			Surface Water Runoff that May Contact Ash		Pump Rate	
Stormwater		**Presumed Average Conditions**	Maximum Drainage Area (AC)	Monthly Runoff Volume (million gallons)	Assumed Pump Time (Month)	Required Pumping Rate (GPM)
			113	3.0	1	**70**
		Presumed Storm Conditions	Storm Event	Stormwater Runoff Volume (million gallons)	Assumed Pump Time (Week)	Required Pumping Rate (GPM)
			2-Year Storm	2.5	1	**253**
			10-year Storm	6.0	1	**594**

Ponds A, B, & C

		In-situ Ash Water					Stormwater Infiltration				Pump Rate	
Ash Dewatering	**AVERAGE CONDITIONS**	Porosity	Initial Degree of Saturation	Final Degree of Saturation	Estimated Ash Volume (CY)	In-Situ Volume to be Dewatered (million gallons)	Area of Ash (AC)	Off Ash Area Unable to be Diverted (AC)	Monthly Runoff Volume on Ash (million gallons)	Monthly Rainfall Volume from Off Ash Areas (million gallons)	Assumed Pump Time (Month)	Required Pumping Rate (GPM)
		0.3	1	0.2	290,400	14.08	18	0	1.7	0.0	2	**203**

			Surface Water Runoff that May Contact Ash		Pump Rate	
Stormwater		**Presumed Average Conditions**	Maximum Drainage Area (AC)	Monthly Runoff Volume (million gallons)	Assumed Pump Time (Month)	Required Pumping Rate (GPM)
			18	0.5	1	**11**
		Presumed Storm Conditions	Storm Event	Stormwater Runoff Volume (million gallons)	Assumed Pump Time (Week)	Required Pumping Rate (GPM)
			2-Year Storm	0.4	1	**40**
			10-year Storm	1.0	1	**95**

00022334

gai consultants

Table 8
Blended Ash Dewatering Waters, Contact Waters, Outfall 502, and Outfall 004

Parameters	Units	Outfall 004		Dewatering & Contact Waters	Outfall 004 + Outfall 502	Dewatering & Contact Waters + 004 + 502
		Presumed Maximum Day	Presumed Long Term Average	Presumed Weighted Average	Presumed Weighted Average	Presumed Weighted Average
Aluminum, Total	mg/L	< 0.09		0.07	< 0.09	< 0.09
Aluminum, Dissolved	mg/L	< 0.09		< 0.026	< 0.08	< 0.07
Antimony, Total	mg/L	< 0.001		< 0.0008	< 0.001	< 0.001
Antimony, Dissolved	mg/L	< 0.001		< 0.0011	< 0.001	< 0.002
Arsenic, Total	mg/L	< 0.003		0.96	< 0.003	< 0.25
Arsenic, Dissolved	mg/L	< 0.003		0.4	< 0.003	< 0.2
Boron, Total	mg/L	0.03		1.2	< 0.03	< 0.33
Boron, Dissolved	mg/L			1.3		
Barium, Total	mg/L	0.044		0.4	0.043	0.2
Barium, Dissolved	mg/L	0.033		0.34	0.033	0.12
Beryllium, Total	mg/L	< 0.0002		< 0.0001	< 0.0002	< 0.0002
Beryllium, Dissolved	mg/L	< 0.0002		< 0.0001	< 0.0002	< 0.0002
Cadmium, Total	mg/L	< 0.0003		< 0.00016	< 0.0003	< 0.0003
Cadmium, Dissolved	mg/L	< 0.0003		< 0.00033	< 0.0003	< 0.0004
Calcium, Total	mg/L			62.7		
Calcium, Dissolved	mg/L			61.2		
Chromium, Total	mg/L	< 0.001		< 0.00033	< 0.001	< 0.001
Chromium, Dissolved	mg/L	< 0.001		0.0023	< 0.001	< 0.002
Trivalent Chromium, Total	mg/L			< 0.01		
Trivalent Chromium, Dissolved	mg/L			< 0.01		
Hexavalent Chromium, Total	µg/L	< 5		< 0.052	< 4	< 3
Hexavalent Chromium, Dissolved	µg/L			< 0.052		
Cobalt, Total	mg/L	< 0.0006		< 0.015	< 0.0007	<0.005
Cobalt, Dissolved	mg/L	< 0.0006		< 0.0016	< 0.0009	< 0.0011
Copper, Total	mg/L	0.007		< 0.00083	0.009	< 0.007
Copper, Dissolved	mg/L	0.004		< 0.0016	0.005	< 0.005
Iron, Total	mg/L	7.00		5.5	5.7	5.7
Iron, Dissolved	mg/L	0.09		< 5.2	0.10	< 1.5
Lead, Total	mg/L	< 0.001		< 0.00033	< 0.001	< 0.001
Lead, Dissolved	mg/L	< 0.001		< 0.00066	< 0.001	< 0.001
Lithium, Total	mg/L			< 0.24		
Lithium, Dissolved	mg/L			< 0.24		
Manganese, Total	mg/L	0.04		0.69	0.07	0.23
Manganese, Dissolved	mg/L	0.02		0.74	0.03	0.22
Magnesium, Total	mg/L	8.36		27.3	8.7	14
Magnesium, Dissolved	mg/L	8.17		29.3	8.5	14

Table 8
Blended Ash Dewatering Waters, Contact Waters, Outfall 502, and Outfall 004

Parameters	Units	Outfall 004		Dewatering & Contact Waters	Outfall 004 + Outfall 502	Dewatering & Contact Waters + 004 + 502
		Presumed Maximum Day	Presumed Long Term Average	Presumed Weighted Average	Presumed Weighted Average	Presumed Weighted Average
Molybdenum, Total	mg/L	0.002		0.091	0.003	0.026
Molybdenum, Dissolved	mg/L	0.002		0.08	0.003	0.03
Mercury, Total	mg/L	< 0.0002		< 0.00016	< 0.0002	< 0.0002
Mercury, Dissolved	mg/L	< 0.0002		< 0.00016	< 0.0002	< 0.0002
Nickel, Total	mg/L	< 0.005		0.0070	< 0.011	< 0.010
Nickel, Dissolved	mg/L	< 0.005		< 0.008	< 0.009	< 0.009
Selenium, Total	mg/L	< 0.003		< 0.0014	< 0.003	< 0.003
Selenium, Dissolved	mg/L	< 0.003		< 0.0023	< 0.003	< 0.003
Silver, Total	mg/L	< 0.0001		< 0.00033	< 0.0002	< 0.0003
Silver, Dissolved	mg/L	< 0.0001		< 0.00066	< 0.0003	< 0.0004
Thallium, Total	mg/L	0.0006		< 0.00016	< 0.0006	< 0.0005
Thallium, Dissolved	mg/L	0.0005		< 0.00033	< 0.0005	< 0.0005
Zinc, Total	mg/L	< 0.01		0.02	< 0.02	< 0.02
Zinc, Dissolved	mg/L	0.013		< 0.07	0.020	< 0.04
Potassium, Total	mg/L			9.4		
Potassium, Dissolved	mg/L			9.7		
Sodium, Total	mg/L			97.2		
Sodium, Dissolved	mg/L			104		
Sulfate	mg/L	44.22		26.4	42.7	38.6
pH	pH_Units	7.38		7.9	7.45	7.6
Specific Conductance	umhos/cm			1270		
Turbidity	NTU			108		
Alkalinity, Total	mg/L			360		
Ammonia-N	mg/L	0.18	0.06	< 0.27	0.16	< 0.19
Nitrate-N	mg/L	2.25	1.02	< 0.085	< 1.80	< 1.4
Nitrite-N	mg/L			< 0.11		
Oil/Grease Hexane Extractable	mg/L	< 5	< 5	< 2	< 4	< 4
Total Kjeldahl Nitrogen	mg/L			< 0.4		
Total Nitrogen	mg/L			< 1.0		
Phosphorus, Total	mg/L	0.17	0.06	< 0.33	0.2	< 0.3
Chloride	mg/L	55.34		182	67.6	96.9
Fluoride	mg/L	0.171		3	< 0.16	< 0.9
Hardness	mg/L	104.31		390	106	179
Total Dissolved Solids	mg/L	272.5		744	281	400
Total Suspended Solids	mg/L	23.5	4.3	23	21	22
Biochemical Oxygen Demand	mg/L	< 3.0		< 0.8	< 3.1	< 3

Table 8
Blended Ash Dewatering Waters, Contact Waters, Outfall 502, and Outfall 004

Parameters	Units	Outfall 004		Dewatering & Contact Waters	Outfall 004 + Outfall 502	Dewatering & Contact Waters + 004 + 502
		Presumed Maximum Day	Presumed Long Term Average	Presumed Weighted Average	Presumed Weighted Average	Presumed Weighted Average
Chlorine, Total Residual	mg/L	< 0.1	< 0.1	< 0.009	< 0.2	< 0.2
Sulfide, Total	mg/L	< 0.05		< 0.35	< 0.12	< 0.18
Cyanide, Total	mg/L	< 0.01		< 0.00058	< 0.01	< 0.01
Aldrin	µg/L	< 0.05		< 0.0007	< 0.04	< 0.03
alpha-BHC	µg/L	< 0.05		< 0.00013	< 0.04	< 0.03
beta-BHC	µg/L	< 0.05		< 0.00016	< 0.04	< 0.03
delta-BHC	µg/L	< 0.05		< 0.00025	< 0.04	< 0.03
gamma-BHC	µg/L	< 0.05		< 0.00015	< 0.04	< 0.03
Chlordane	µg/L	< 0.2		< 0.013	< 0.2	< 0.2
4,4'-DDD	µg/L	< 0.1		< 0.00016	< 0.1	< 0.1
4,4'-DDE	µg/L	< 0.1		< 0.00016	< 0.1	< 0.1
4,4'-DDT	µg/L	< 0.1		< 0.00023	< 0.1	< 0.1
Dieldrin	µg/L	< 0.1		< 0.00013	< 0.1	< 0.1
Endosulfan I	µg/L	< 0.1		< 0.00028	< 0.1	< 0.1
Endosulfan II	µg/L	< 0.1		< 0.00014	< 0.1	< 0.1
Endosulfan Sulfate	µg/L	< 0.1		< 0.0002	< 0.1	< 0.1
Endrin	µg/L	< 0.1		< 0.00015	< 0.1	< 0.1
Endrin Aldehyde	µg/L	< 0.1		< 0.00031	< 0.1	< 0.1
Heptachlor	µg/L	< 0.05		< 0.0003	< 0.04	< 0.03
Heptachlor Epoxide	µg/L	< 0.1		< 0.00016	< 0.1	< 0.1
Methoxychlor	µg/L	< 0.1		< 0.00026	< 0.1	< 0.1
Mirex	µg/L	< 0.1		< 0.00056	< 0.1	< 0.1
Total Polychlorinated Biphenyl	µg/L			0		
Toxaphene	µg/L	< 5		< 0.0099	< 4	< 3
Aroclor-1016	µg/L			< 0.041		
Aroclor-1221	µg/L			< 0.062		
Aroclor-1232	µg/L			< 0.077		
Aroclor-1242	µg/L			< 0.045		
Aroclor-1248	µg/L			< 0.036		
Aroclor-1254	µg/L			< 0.058		
Aroclor-1260	µg/L			< 0.041		
Azinphos Methyl	µg/L	< 1		< 0.35	< 1	< 0.9
Chlorpyrifos	µg/L	< 0.2		< 0.47	< 0.3	< 0.4
Demeton	µg/L	< 1		< 0.3	< 0.9	< 0.8
Diazinon	µg/L	< 1		< 0.27	< 0.9	< 0.8
Malathion	µg/L	< 1		< 0.21	< 0.9	< 0.8

Table 8
Blended Ash Dewatering Waters, Contact Waters, Outfall 502, and Outfall 004

Parameters	Units	Outfall 004		Dewatering & Contact Waters	Outfall 004 + Outfall 502	Dewatering & Contact Waters + 004 + 502
		Presumed Maximum Day	Presumed Long Term Average	Presumed Weighted Average	Presumed Weighted Average	Presumed Weighted Average
Parathion	µg/L	< 1		< 0.31	< 0.9	< 0.8
Acrolein	µg/L	< 10		< 2.4	< 8.4	< 6.9
Acrylonitrile	µg/L	< 1.5		< 0.89	< 1.4	< 1.3
Benzene	µg/L	< 4.4		< 0.16	< 3.5	< 2.7
Bromodichloromethane	µg/L	< 2.2		< 0.13	< 1.8	< 1.4
Bromoform	µg/L	< 4.7		< 0.21	< 3.8	< 2.9
Bromomethane	µg/L	< 1.4		< 0.27	< 1.2	< 0.97
Carbon Tetrachloride	µg/L	< 2.8		< 0.24	< 2.3	< 1.8
Chlorobenzene	µg/L	< 6		< 0.11	< 5	< 4
Chlorodibromomethane	µg/L	< 3.1		< 0.22	< 2.5	< 2.0
Chloroform	µg/L	16.82		< 0.15	< 14	< 11
1,2-Dichlorobenzene	µg/L	< 5		< 0.2	< 4	< 4
1,3-Dichlorobenzene	µg/L	< 5		< 0.14	< 4	< 4
1,4-Dichlorobenzene	µg/L	< 5		< 0.15	< 4	< 4
1,2-Dichloroethane	µg/L	< 2.8		< 0.22	< 2.3	< 1.8
1,1-Dichloroethene	µg/L	< 2.8		< 0.17	< 2.3	< 1.8
trans-1,2-Dichloroethene	µg/L	< 1.6		< 0.12	< 1.3	< 1.0
1,2-Dichloropropane	µg/L	< 6		< 0.24	< 5	< 4
cis-1,3-Dichloropropene	µg/L			< 0.12		
trans-1,3-Dichloropropene	µg/L			< 0.14		
1,3-Dichloropropene, Total	µg/L	< 5.9		< 0.19	< 4.7	< 3.6
Ethylbenzene	µg/L	< 7.2		< 0.16	< 5.7	< 4.3
Methylene Chloride	µg/L	< 2.8		< 0.32	< 2.3	< 1.8
1,1,2,2-Tetrachloroethane	µg/L	< 6.9		< 0.22	< 5.5	< 4.2
Tetrachloroethene	µg/L	< 4.1		< 0.26	< 3.3	< 2.6
Toluene	µg/L	< 6		< 0.12	< 5	< 4
1,1,2-Trichloroethane	µg/L	< 5		< 0.3	< 4	< 4
Trichloroethene	µg/L	< 1.9		< 0.21	< 1.6	< 1.3
Vinyl Chloride	µg/L	< 1.8		< 0.24	< 1.5	< 1.2
Acenaphthene	µg/L	< 5		< 0.33	< 4	< 4
Anthracene	µg/L	< 5		< 0.34	< 4	< 4
Benzidine	µg/L	< 5		< 22.4	< 9	< 20
Benzo(a)anthracene	µg/L	< 5		< 0.3	< 4	< 4
Benzo(a)pyrene	µg/L	< 5		< 0.36	< 4	< 4
Benzo(b)fluoranthene	µg/L	< 5		< 0.41	< 4	< 4
Benzo(k)fluoranthene	µg/L	< 5		< 0.37	< 4	< 4

Table 8
Blended Ash Dewatering Waters, Contact Waters, Outfall 502, and Outfall 004

Parameters	Units	Outfall 004		Dewatering & Contact Waters	Outfall 004 + Outfall 502	Dewatering & Contact Waters + 004 + 502
		Presumed Maximum Day	Presumed Long Term Average	Presumed Weighted Average	Presumed Weighted Average	Presumed Weighted Average
Butylbenzylphthalate	µg/L	< 5		< 0.33	< 4	< 4
bis(2-Chloroethyl)ether	µg/L	< 5		< 0.35	< 4	< 4
bis(2-Chloroisopropyl)ether	µg/L	< 5		< 0.5	< 5	< 4
2-Chloronaphthalene	µg/L	< 5		< 0.34	< 4	< 4
2-Chlorophenol	µg/L	< 5		< 0.59	< 5	< 4
Chrysene	µg/L	< 5		< 0.35	< 4	< 4
Di-n-Butylphthalate	µg/L	< 5		< 0.31	< 4	< 4
Dibenzo(a,h)anthracene	µg/L	< 5		< 0.29	< 4	< 4
3,3-Dichlorobenzidine	µg/L	< 5		< 2.8	< 5	< 5
2,4-Dichlorophenol	µg/L	< 5		< 0.46	< 5	< 4
Diethylphthalate	µg/L	< 5		< 0.3	< 4	< 4
2,4-Dimethylphenol	µg/L	< 5		< 2.9	< 5	< 5
Dimethylphthalate	µg/L	< 5		< 0.37	< 4	< 4
2,4-Dinitrophenol	µg/L	< 5		< 2.3	< 5	< 5
2,4-Dinitrotoluene	µg/L	< 5		< 0.37	< 4	< 4
1,2-Diphenylhydrazine	µg/L	< 0.1		< 0.32	< 0.2	< 0.3
bis(2-Ethylhexyl)phthalate	µg/L	< 5		< 0.35	< 4	< 4
Fluoranthene	µg/L	< 5		< 0.25	< 4	< 4
Fluorene	µg/L	< 5		< 0.36	< 4	< 4
Hexachlorobenzene	µg/L	< 5		< 0.3	< 4	< 4
Hexachlorobutadiene	µg/L	< 5		< 0.29	< 4	< 4
Hexachlorocyclopentadiene	µg/L	< 5		< 1	< 5	< 4
Hexachloroethane	µg/L	< 5		< 0.32	< 4	< 4
Indeno(1,2,3-cd)pyrene	µg/L	< 5		< 0.29	< 4	< 4
Isophorone	µg/L	< 5		< 0.38	< 4	< 4
2-Methyl-4,6-dinitrophenol	µg/L	< 50		< 1.3	< 40	<31
Nitrobenzene	µg/L	< 5		< 0.62	< 5	< 4
N-Nitrosodimethylamine	µg/L	< 5		< 0.45	< 5	< 4
N-Nitroso-di-n-propylamine	µg/L	< 5		< 0.53	< 5	< 4
N-Nitrosodiphenylamine	µg/L	< 5		< 1	< 5	< 4
Pentachlorophenol	µg/L	< 5		< 1.8	< 5	< 5
Phenol	µg/L	< 5		< 0.22	< 4	< 4
Pyrene	µg/L	< 5		< 0.35	< 4	< 4
1,2,4-Trichlorobenzene	µg/L	< 5		< 0.26	< 4	< 4
2,4,6-Trichlorophenol	µg/L	< 5		< 0.36	< 4	< 4
Kepone	µg/L	< 0.1		< 1.8	< 0.5	< 0.9

Table 8
Blended Ash Dewatering Waters, Contact Waters, Outfall 502, and Outfall 004

Parameters	Units	Outfall 004		Dewatering & Contact Waters	Outfall 004 + Outfall 502	Dewatering & Contact Waters + 004 + 502
		Presumed Maximum Day	Presumed Long Term Average	Presumed Weighted Average	Presumed Weighted Average	Presumed Weighted Average
FIELD PARAMETERS						
pH (Field)	pH_Units	7.38		7.6	7.48	7.6
Temperature	° C	34.6		19.34	32.0	28.8
Conductivity	µs/cm			1130		
Dissolved Oxygen	%			84.4		
Dissolved Oxygen	mg/l			7.73		
ORP	mv			-114.2		
Chlorine, Total Residual	ppm	< 0.1	< 0.1	0.01	< 0.1	< 0.1

Notes:

1) ND- Not detected above the laboratory detection limit.
2) NA- Not analyzed.
3) mg/L - milligrams per liter.
4) µg/L- micrograms per liter.
5) µS/cm - microsiemens/centimeter.
6) mv- millivolts.
7) ppm- parts per million.
8) ORP- Oxidation Reduction Potential.
9) Outfall maximum and long term average data is from the 2013 permit application for reissuance of Possum Point's VPDES Permit.
10) Presumed weighted average of Dewatering Waters, Contact Waters, Low Volume Settling Ponds (Outfall 004), and Outfall 502 Water is based on projected 617-gpm Dewatering & Contact Waters rate and a sum of the long term average rates in the 2013 permit reissuance application for Outfall 004 + Outfall 502, or 2.59-MGD.

Table 9
Blended Ash Dewatering, Contact Waters, and Outfall 001/002

Parameters	Units	Outfall 001/002		Dewatering & Contact Waters	Dewatering & Contact Waters + 001/002
		Presumed Maximum Day	Presumed Long Term Average	Presumed Weighted Average	Presumed Weighted Average
Aluminum, Total	mg/L	< 0.09		0.07	< 0.09
Aluminum, Dissolved	mg/L	< 0.09		< 0.026	< 0.09
Antimony, Total	mg/L	< 0.001		< 0.0008	< 0.001
Antimony, Dissolved	mg/L	< 0.001		< 0.0011	< 0.002
Arsenic, Total	mg/L	< 0.003		0.96	< 0.02
Arsenic, Dissolved	mg/L	< 0.003		0.4	< 0.1
Boron, Total	mg/L	0.02		1.2	0.04
Boron, Dissolved	mg/L			1.3	
Barium, Total	mg/L	0.043		0.4	0.1
Barium, Dissolved	mg/L	0.038		0.34	0.05
Beryllium, Total	mg/L	< 0.0002		< 0.0001	< 0.0002
Beryllium, Dissolved	mg/L	< 0.0002		< 0.0001	< 0.0002
Cadmium, Total	mg/L	< 0.0003		< 0.00016	< 0.0003
Cadmium, Dissolved	mg/L	< 0.0003		< 0.00033	< 0.0004
Calcium, Total	mg/L			62.7	
Calcium, Dissolved	mg/L			61.2	
Chromium, Total	mg/L	< 0.001		< 0.00033	< 0.001
Chromium, Dissolved	mg/L	< 0.001		0.0023	< 0.002
Trivalent Chromium, Total	mg/L			< 0.01	
Trivalent Chromium, Dissolved	mg/L			< 0.01	
Hexavalent Chromium, Total	µg/L	< 0.005		< 0.052	< 0.006
Hexavalent Chromium, Dissolved	µg/L			< 0.052	
Cobalt, Total	mg/L	0.0007		< 0.015	< 0.001
Cobalt, Dissolved	mg/L	< 0.0006		< 0.0016	< 0.0007
Copper, Total	mg/L	0.011		< 0.00083	< 0.011
Copper, Dissolved	mg/L	0.008		< 0.0016	< 0.008
Iron, Total	mg/L	0.42		5.5	0.48
Iron, Dissolved	mg/L	< 0.05		< 5.2	< 0.11
Lead, Total	mg/L	< 0.001		< 0.00033	< 0.001
Lead, Dissolved	mg/L	< 0.001		< 0.00066	< 0.001
Lithium, Total	mg/L			< 0.24	
Lithium, Dissolved	mg/L			< 0.24	
Manganese, Total	mg/L	0.12		0.69	0.13
Manganese, Dissolved	mg/L	0.04		0.74	0.05
Magnesium, Total	mg/L	8.04		27.3	8.24
Magnesium, Dissolved	mg/L	7.82		29.3	8.04
Molybdenum, Total	mg/L	<0.001		0.091	< 0.002
Molybdenum, Dissolved	mg/L	<0.001		0.08	< 0.01

Table 9
Blended Ash Dewatering, Contact Waters, and Outfall 001/002

Parameters	Units	Outfall 001/002		Dewatering & Contact Waters	Dewatering & Contact Waters + 001/002
		Presumed Maximum Day	Presumed Long Term Average	Presumed Weighted Average	Presumed Weighted Average
Mercury, Total	mg/L	< 0.0002		< 0.00016	< 0.0002
Mercury, Dissolved	mg/L	< 0.0002		< 0.00016	< 0.0002
Nickel, Total	mg/L	< 0.005		0.0070	< 0.006
Nickel, Dissolved	mg/L	< 0.005		< 0.008	< 0.006
Selenium, Total	mg/L	< 0.003		< 0.0014	< 0.003
Selenium, Dissolved	mg/L	< 0.003		< 0.0023	< 0.003
Silver, Total	mg/L	< 0.0001		< 0.00033	< 0.0002
Silver, Dissolved	mg/L	< 0.0001		< 0.00066	< 0.0002
Thallium, Total	mg/L	< 0.0002		< 0.00016	< 0.0002
Thallium, Dissolved	mg/L	0.0002		< 0.00033	< 0.0003
Zinc, Total	mg/L	< 0.01		0.02	< 0.02
Zinc, Dissolved	mg/L	< 0.01		< 0.07	< 0.02
Potassium, Total	mg/L			9.4	
Potassium, Dissolved	mg/L			9.7	
Sodium, Total	mg/L			97.2	
Sodium, Dissolved	mg/L			104	
Sulfate	mg/L	28.06		26.4	28.1
pH	pH_Units			7.9	
Specific Conductance	umhos/cm			1270	
Turbidity	NTU			108	
Alkalinity, Total	mg/L			360	
Ammonia-N	mg/L	0.07		< 0.27	< 0.08
Nitrate-N	mg/L	2.47		< 0.085	< 2.5
Nitrite-N	mg/L			< 0.11	
Oil/Grease Hexane Extractable	mg/L	< 5		< 2	< 5
Total Kjeldahl Nitrogen	mg/L			< 0.4	
Total Nitrogen	mg/L			< 1.0	
Phosphorus, Total	mg/L	< 0.32		< 0.33	< 0.33
Chloride	mg/L	23.08		182	24.7
Fluoride	mg/L	0.11		3	0.2
Hardness	mg/L	111.15		390	114
Total Dissolved Solids	mg/L	305.5		744	310
Total Suspended Solids	mg/L	12.4		23	13
Biochemical Oxygen Demand	mg/L	< 3.0		< 0.8	< 3
Chlorine, Total Residual	mg/L			< 0.009	
Sulfide, Total	mg/L	< 0.05		< 0.35	< 0.06
Cyanide, Total	mg/L	< 0.01		< 0.00058	< 0.01
Aldrin	µg/L	< 0.05		< 0.0007	< 0.05

Table 9
Blended Ash Dewatering, Contact Waters, and Outfall 001/002

Parameters	Units	Outfall 001/002		Dewatering & Contact Waters	Dewatering & Contact Waters + 001/002
		Presumed Maximum Day	Presumed Long Term Average	Presumed Weighted Average	Presumed Weighted Average
alpha-BHC	µg/L	< 0.05		< 0.00013	< 0.05
beta-BHC	µg/L	< 0.05		< 0.00016	< 0.05
delta-BHC	µg/L	< 0.05		< 0.00025	< 0.05
gamma-BHC	µg/L	< 0.05		< 0.00015	< 0.05
Chlordane	µg/L	< 0.2		< 0.013	< 0.2
4,4'-DDD	µg/L	< 0.1		< 0.00016	< 0.1
4,4'-DDE	µg/L	< 0.1		< 0.00016	< 0.1
4,4'-DDT	µg/L	< 0.1		< 0.00023	< 0.1
Dieldrin	µg/L	< 0.1		< 0.00013	< 0.1
Endosulfan I	µg/L	< 0.1		< 0.00028	< 0.1
Endosulfan II	µg/L	< 0.1		< 0.00014	< 0.1
Endosulfan Sulfate	µg/L	< 0.1		< 0.0002	< 0.1
Endrin	µg/L	< 0.1		< 0.00015	< 0.1
Endrin Aldehyde	µg/L	< 0.1		< 0.00031	< 0.1
Heptachlor	µg/L	< 0.05		< 0.0003	< 0.05
Heptachlor Epoxide	µg/L	< 0.1		< 0.00016	< 0.1
Methoxychlor	µg/L	< 0.1		< 0.00026	< 0.1
Mirex	µg/L	< 0.1		< 0.00056	< 0.1
Total Polychlorinated Biphenyl	µg/L			0	
Toxaphene	µg/L	< 5		< 0.0099	< 5
Aroclor-1016	µg/L			< 0.041	
Aroclor-1221	µg/L			< 0.062	
Aroclor-1232	µg/L			< 0.077	
Aroclor-1242	µg/L			< 0.045	
Aroclor-1248	µg/L			< 0.036	
Aroclor-1254	µg/L			< 0.058	
Aroclor-1260	µg/L			< 0.041	
Azinphos Methyl	µg/L			< 0.35	
Chlorpyrifos	µg/L	< 0.2		< 0.47	< 0.3
Demeton	µg/L	< 1		< 0.3	< 1
Diazinon	µg/L	< 1		< 0.27	< 1
Malathion	µg/L	< 1		< 0.21	< 1
Parathion	µg/L	< 1		< 0.31	< 1
Acrolein	µg/L	< 10		< 2.4	< 10
Acrylonitrile	µg/L	< 1.5		< 0.89	< 1.5
Benzene	µg/L	< 4.4		< 0.16	< 4.4
Bromodichloromethane	µg/L	< 2.2		< 0.13	< 2.2
Bromoform	µg/L	< 4.7		< 0.21	< 4.7

Table 9
Blended Ash Dewatering, Contact Waters, and Outfall 001/002

Parameters	Units	Outfall 001/002		Dewatering & Contact Waters	Dewatering & Contact Waters + 001/002
		Presumed Maximum Day	Presumed Long Term Average	Presumed Weighted Average	Presumed Weighted Average
Bromomethane	µg/L	< 1.4		< 0.27	< 1.4
Carbon Tetrachloride	µg/L	<2.8		< 0.24	<2.8
Chlorobenzene	µg/L	< 6		< 0.11	< 6
Chlorodibromomethane	µg/L	< 3.1		< 0.22	< 3.1
Chloroform	µg/L	< 1.6		< 0.15	< 1.6
1,2-Dichlorobenzene	µg/L	< 5		< 0.2	< 5
1,3-Dichlorobenzene	µg/L	< 5		< 0.14	< 5
1,4-Dichlorobenzene	µg/L	< 5		< 0.15	< 5
1,2-Dichloroethane	µg/L	< 2.8		< 0.22	< 2.8
1,1-Dichloroethene	µg/L	< 2.8		< 0.17	< 2.8
trans-1,2-Dichloroethene	µg/L	< 1.6		< 0.12	< 1.6
1,2-Dichloropropane	µg/L	< 6		< 0.24	< 6
cis-1,3-Dichloropropene	µg/L			< 0.12	
trans-1,3-Dichloropropene	µg/L			< 0.14	
1,3-Dichloropropene, Total	µg/L	< 5.9		< 0.19	< 5.9
Ethylbenzene	µg/L	< 7.2		< 0.16	< 7.2
Methylene Chloride	µg/L	< 2.8		< 0.32	< 2.8
1,1,2,2-Tetrachloroethane	µg/L	< 6.9		< 0.22	< 6.9
Tetrachloroethene	µg/L	< 4.1		< 0.26	< 4.1
Toluene	µg/L	< 6		< 0.12	< 6
1,1,2-Trichloroethane	µg/L	< 5		< 0.3	< 5
Trichloroethene	µg/L	< 1.9		< 0.21	< 1.9
Vinyl Chloride	µg/L	< 1.8		< 0.24	< 1.8
Acenaphthene	µg/L	< 10		< 0.33	< 10
Anthracene	µg/L	< 10		< 0.34	< 10
Benzidine	µg/L	< 6.3		< 22.4	< 6.5
Benzo(a)anthracene	µg/L	< 10		< 0.3	< 10
Benzo(a)pyrene	µg/L	< 10		< 0.36	< 10
Benzo(b)fluoranthene	µg/L	< 10		< 0.41	< 10
Benzo(k)fluoranthene	µg/L	< 10		< 0.37	< 10
Butylbenzylphthalate	µg/L	< 10		< 0.33	< 10
bis(2-Chloroethyl)ether	µg/L	< 10		< 0.35	< 10
bis(2-Chloroisopropyl)ether	µg/L	< 10		< 0.5	< 10
2-Chloronaphthalene	µg/L	< 10		< 0.34	< 10
2-Chlorophenol	µg/L	< 10		< 0.59	< 10
Chrysene	µg/L	< 10		< 0.35	< 10
Di-n-Butylphthalate	µg/L	< 10		< 0.31	< 10
Dibenzo(a,h)anthracene	µg/L	< 10		< 0.29	< 10

Table 9
Blended Ash Dewatering, Contact Waters, and Outfall 001/002

Parameters	Units	Outfall 001/002		Dewatering & Contact Waters	Dewatering & Contact Waters + 001/002
		Presumed Maximum Day	Presumed Long Term Average	Presumed Weighted Average	Presumed Weighted Average
3,3-Dichlorobenzidine	µg/L	< 20		< 2.8	< 20
2,4-Dichlorophenol	µg/L	< 10		< 0.46	< 10
Diethylphthalate	µg/L	< 10		< 0.3	< 10
2,4-Dimethylphenol	µg/L	< 10		< 2.9	< 10
Dimethylphthalate	µg/L	< 10		< 0.37	< 10
2,4-Dinitrophenol	µg/L	< 10		< 2.3	< 10
2,4-Dinitrotoluene	µg/L	< 10		< 0.37	< 10
1,2-Diphenylhydrazine	µg/L	< 100		< 0.32	< 100
bis(2-Ethylhexyl)phthalate	µg/L	< 10		< 0.35	< 10
Fluoranthene	µg/L	< 10		< 0.25	< 10
Fluorene	µg/L	< 10		< 0.36	< 10
Hexachlorobenzene	µg/L	< 10		< 0.3	< 10
Hexachlorobutadiene	µg/L	< 10		< 0.29	< 10
Hexachlorocyclopentadiene	µg/L	< 10		< 1	< 10
Hexachloroethane	µg/L	< 10		< 0.32	< 10
Indeno(1,2,3-cd)pyrene	µg/L	< 10		< 0.29	< 10
Isophorone	µg/L	< 10		< 0.38	< 10
2-Methyl-4,6-dinitrophenol	µg/L	< 50		< 1.3	< 50
Nitrobenzene	µg/L	< 10		< 0.62	< 10
N-Nitrosodimethylamine	µg/L	< 10		< 0.45	< 10
N-Nitroso-di-n-propylamine	µg/L	< 10		< 0.53	< 10
N-Nitrosodiphenylamine	µg/L	< 10		< 1	< 10
Pentachlorophenol	µg/L	< 50		< 1.8	< 50
Phenol	µg/L	< 10		< 0.22	< 10
Pyrene	µg/L	< 10		< 0.35	< 10
1,2,4-Trichlorobenzene	µg/L	< 10		< 0.26	< 10
2,4,6-Trichlorophenol	µg/L	< 10		< 0.36	< 10
Kepone	µg/L	< 0.1		< 1.8	< 0.2
FIELD PARAMETERS					
pH (Field)	pH_Units	8.4		7.6	8.4
Temperature	° C	39.1		19.34	38.9
Conductivity	µs/cm			1130	
Dissolved Oxygen	%			84.4	
Dissolved Oxygen	mg/l			7.73	
ORP	mv			-114.2	
Chlorine, Total Residual	ppm	< 0.1	< 0.1	0.01	< 0.1

Table 9
Blended Ash Dewatering, Contact Waters, and Outfall 001/002

Parameters	Units	Outfall 001/002		Dewatering & Contact Waters	Dewatering & Contact Waters + 001/002
		Presumed Maximum Day	Presumed Long Term Average	Presumed Weighted Average	Presumed Weighted Average

Notes:

1) ND- Not detected above the laboratory detection limit.
2) NA- Not analyzed.
3) mg/L - milligrams per liter.
4) µg/L- micrograms per liter.
5) µS/cm - microsiemens/centimeter.
6) mv- millivolts.
7) ppm- parts per million.
8) ORP- Oxidation Reduction Potential.
9) Outfall maximum and long term average data is from the 2013 permit application for reissuance of Possum Point's VPDES Permit.
10) Presumed weighted average of Dewatering & Contact Waters + Outfall 001/002 is based on projected 617-gpm Dewatering & Contact Waters rate and a long term average rate in the 2013 permit reissuance application of 86.38-MGD for Outfall 001/002.

Table 10
Chemical Additives List

Chemical Additive Name	Manufacturer	Purpose(s)
CAT-FLOC 8799 PLUS	NALCO	Coagulant
GWT2215	Guardian CSC	Coagulant
Klaraid CDP1314	GE Betz, Inc.	Coagulant
Klaraid CDP1346	GE Betz, Inc.	Coagulant
Klaraid IC1172	GE Betz, Inc.	Coagulant
Klaraid PC1192	GE Betz, Inc.	Coagulant
Klaraid PC2700	GE Betz, Inc.	Coagulant
Klaraid PC2705	GE Betz, Inc.	Coagulant
Nalcolyte 8100	NALCO	Coagulant
Nalkat 2020	NALCO	Coagulant
Unifloc 800	Aqua Kinetics, Inc.	Coagulant
AK178	Aqua Kinetics, Inc.	Flocculant
Aries 1668	Aries Chemical Inc.	Flocculant
Aries 1674	Aries Chemical Inc.	Flocculant
AS 1430PW	Applied Specialties, Inc.	Flocculant
Brennfloc BIID	Kemira	Flocculant
Cationic Polymer Gel Logs	Water Treatment Services	Flocculant
ChemTreat P812	ChemTreat, Inc.	Flocculant
ChemTreat P823L	ChemTreat, Inc.	Flocculant
Clarifloc N-6310	SNF/Polydyne Inc.	Flocculant
Core Shell 71301	NALCO	Flocculant
Core Shell 71303	NALCO	Flocculant
Magnafloc LT340	BASF	Flocculant
NALCLEAR 7768	NALCO	Flocculant
Nalco 1404	NALCO	Flocculant
Nalco 2706	NALCO	Flocculant
Nalco 71306	NALCO	Flocculant
Nalco GR-201	NALCO	Flocculant
Novus CE2688	GE Betz, Inc.	Flocculant
Optimer 7193 Plus	NALCO	Flocculant
Optimer 7194 Plus	NALCO	Flocculant
PL-1419	Athlon Solutions	Flocculant
Pollu-Treat CL416	Solenis LLC	Flocculant
Polyfloc AE1115	GE Betz, Inc.	Flocculant
Polyfloc AE1115P	GE Betz, Inc.	Flocculant
Polyfloc AE1125	GE Betz, Inc.	Flocculant
Polyfloc AE1138	GE Betz, Inc.	Flocculant
Polyfloc AE1147	GE Betz, Inc.	Flocculant
Polyfloc AE1700	GE Betz, Inc.	Flocculant
Polyfloc AE1701	GE Betz, Inc.	Flocculant
Polyfloc AE1702	GE Betz, Inc.	Flocculant
Polyfloc AE1703	GE Betz, Inc.	Flocculant

Table 10
Chemical Additives List

Chemical Additive Name	Manufacturer	Purpose(s)
Polyfloc AP1100	GE Betz, Inc.	Flocculant
Polyfloc AP1120	GE Betz, Inc.	Flocculant
Polyfloc AP1720	GE Betz, Inc.	Flocculant
Polyfloc AS1002	GE Betz, Inc.	Flocculant
Polyfloc CP1158	GE Betz, Inc.	Flocculant
Polyfloc CP1644	GE Betz, Inc.	Flocculant
Polymer 1110	GE Betz, Inc.	Flocculant
Polymer 1125L	GE Betz, Inc.	Flocculant
Solisep MPT100	GE Betz, Inc.	Flocculant
Spectrafloc 675	Baker Petrolite	Flocculant
Spectrafloc 680	Baker Petrolite	Flocculant
Spectrafloc 692	Baker Petrolite	Flocculant
Superfloc A-1820	Univar	Flocculant
Superfloc N-1986	Kemira	Flocculant
Unifloc 155P	Aqua Kinetics, Inc.	Flocculant
WTSWW 513AE	Water Treatment Services	Flocculant
WTSWW 526AE	Water Treatment Services	Flocculant
WTSWW-AGL605	Water Treatment Services	Flocculant
Y9BH1351	Baker Petrolite	Flocculant
Zetag 7565	Ciba Corp	Flocculant
BPW 76001	Baker Petrolite	Inorganic Coagulant
PL-900	Athlon Solutions	Polymer
TR-50	Water Specialist Tech.	Precipitant
ChemTreat P873L	ChemTreat, Inc.	Water Clarification
ChemTreat P899L	ChemTreat, Inc.	Water Clarification
Nalco GR-204	NALCO	Water Clarification
ChemTreat P801E	ChemTreat, Inc.	Water Clarification Solids Conditioning
ChemTreat P817E	ChemTreat, Inc.	Water Clarification Solids Conditioning
ChemTreat P8305E	ChemTreat, Inc.	Water Clarification Solids Conditioning
ChemTreat P846E	ChemTreat, Inc.	Water Clarification Solids Conditioning

DRAWINGS

DRAWING TITLE			DRAWN BY:	CHECKED BY:	APPROVED BY:
STATION OUTFALLS & TREATMENT FACILITIES			VASKOAJ	DEBARJD	QUINLSC
PROJECT		CLIENT	DWG TYPE:	SCALE:	ISSUE DATE:
POSSUM POINT POWER STATION 19000 POSSUM POINT ROAD DUMFRIES, PRINCE WILLIAM COUNTY VIRGINIA 22026	gai consultants	DOMINION RESOURCES SERVICE, INC. 5000 DOMINION BOULEVARD GLEN ALLEN, VIRGINIA 23060		1" = 700'	07/29/2015
			SHEET NO.:	1 OF 1	
			GAI FILE NUMBER:		
			C150132.00 - AERIAL Outfall Exhibit		
			GAI DRAWING NUMBER:		
			11x17 VDEQ		

This drawing was produced with computer aided drafting technology and is supported by electronic drawing files. Do not revise this drawing via manual drafting methods.

ISSUING OFFICE: Richmond | 4198 Cox Road, Suite 114,Glen Allen, VA 23060

PLOTTED ON: 8/3/2015 5:04:05 PM PLOTTED BY: Andrew Vasko PLOT FILE: GAI.stb

GAI CAD FILE PATH: Z:\Energy\2015\C150132.00 – DOM – Possum Point PS CCB\Working Docs\Task 1.3\C150132.00 – AERIAL Outfall Exhibit.dwg

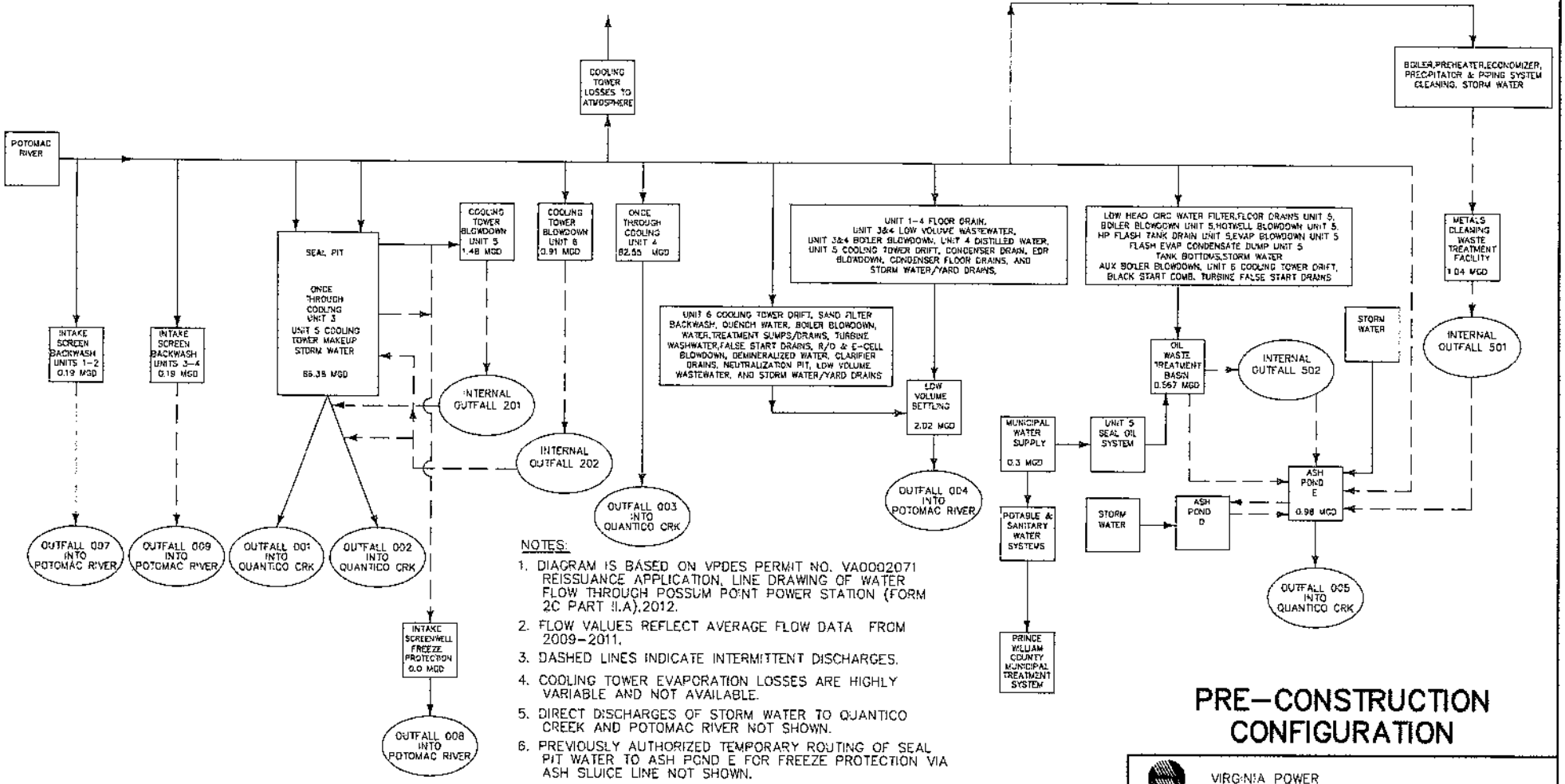

NOTES:

1. DIAGRAM IS BASED ON VPDES PERMIT NO. VA0002071 REISSUANCE APPLICATION, LINE DRAWING OF WATER FLOW THROUGH POSSUM POINT POWER STATION (FORM 2C PART II.A),2012.
2. FLOW VALUES REFLECT AVERAGE FLOW DATA FROM 2009-2011.
3. DASHED LINES INDICATE INTERMITTENT DISCHARGES.
4. COOLING TOWER EVAPORATION LOSSES ARE HIGHLY VARIABLE AND NOT AVAILABLE.
5. DIRECT DISCHARGES OF STORM WATER TO QUANTICO CREEK AND POTOMAC RIVER NOT SHOWN.
6. PREVIOUSLY AUTHORIZED TEMPORARY ROUTING OF SEAL PIT WATER TO ASH POND E FOR FREEZE PROTECTION VIA ASH SLUICE LINE NOT SHOWN.
7. PREVIOUSLY AUTHORIZED TEMPORARY ROUTING OF UNIT 5 LIFT STATION FLOW TO OILY WASTE POND TO LOW VOLUME SETTLING PONDS NOT SHOWN.

PRE-CONSTRUCTION CONFIGURATION

VIRGINIA POWER
NORTH CAROLINA POWER
FOSSIL & HYDRO ENGINEERING
RICHMOND, VIRGINIA

WATER FLOW BALANCE LINE DIAGRAM

POSSUM POINT POWER STATION

CAD FILE: DGNSPEC FOR FILE VERIFICATION DATE$$$$$$$

DRAWING NO. PP-0-SP-STA-600 REV. 1

APPROVAL OF THE SUPT OF TECH SERVICES IS REQ'D PRIOR TO ISSUE OF THIS DWG

REV	DATE	DRWN	CHKD	APPD	ENGR	REV	DATE	DRWN	CHKD	APPD	ENGR	REV	DATE	DRWN	CHKD	APPD	ENGR
	8/5/15	LITZIJ	DEBARJD	QUINLSC		1	5/31/12	KTC	OD-D	RWM		0	3/6/12	KTC	OD-D	RWM	— —
							REVISED PER ENVIRONMENTAL REDLINE TO INCORPORATE STATION REVIEW.						ORIG. ISSUE FOR 600 SERIES ACAD CONVERSION. REV PER ENVIRONMENTAL REDLINE.				

G:\Energy\2015\G1501.32.00 - DOM - Possum Point PS CCB\CAD\Production Drawings\PROCESS\PP-0-SP-STA-600[S001]-PRE CONST CONFIG.DWG
00022364

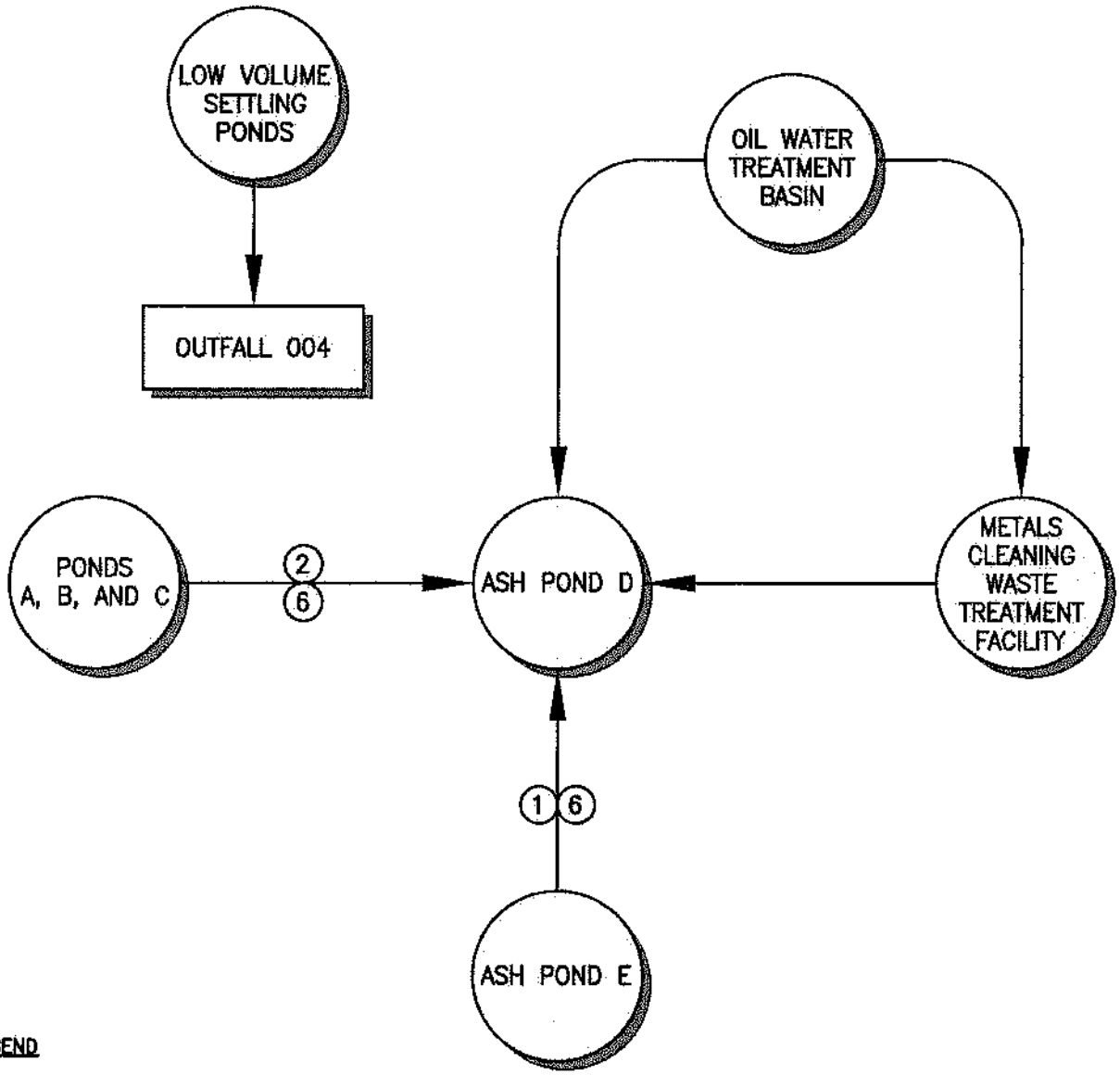

LEGEND

FLOW PATH

1 MECHANICALLY DREDGE ASH FROM POND E INTO POND D

2 MECHANICALLY DREDGE ASH FROM PONDS A, B, AND C INTO POND D

6 ASH DEWATERING WATER AND CONTACT WATER

OUTFALL 005

NOTES:

ALSO, REFER TO TABLE 1 FOR ACTIVITY/FLOW PATH NUMBER DESCRIPTIONS.

DRAWING TITLE	GAI DRAWING NUMBER:
PRESENT CONDITIONS (DURING CONSTRUCTION)	**C150132-00-047-00-P-A2-001**

PROJECT

POSSUM POINT POWER STATION
19000 POSSUM POINT ROAD
DUMFRIES, PRINCE WILLIAM CO., VA 22026

CLIENT

DOMINION RESOURCES SERVICE, INC.
5000 DOMINION BOULEVARD
GLEN ALLEN, VIRGINIA 23060

gai consultants

GAI FILE NUMBER: **C150132-00-047-00-P-A2-001**

DRAWN BY:	CHECKED BY:	APPROVED BY:
HULTBGC	DEBARJD	QUINLSC
SHEET NO.:	SCALE:	ISSUE DATE:
1 OF 3	AS SHOWN	07/15/2015

© 2015 GAI Consultants, Inc.

This drawing was produced with computer aided drafting technology and is supported by electronic drawing files. Do not revise this drawing via manual drafting methods.

ISSUING OFFICE: Richmond | 4198 Cox Road, Suite 114, Glen Allen, VA 23060

PLOTTED ON: 8/14/2015 8:39:26 PM PLOTTED BY: John DeBarbieri PLOT FILE: GAI.stb

GAI CAD FILE PATH: Z:\Energy\2015\C150132.00 - DOM - Possum Point PS CCB\CAD\Production Drawings\PROCESS\C150132-00-047-00-P-A2-001.dwg

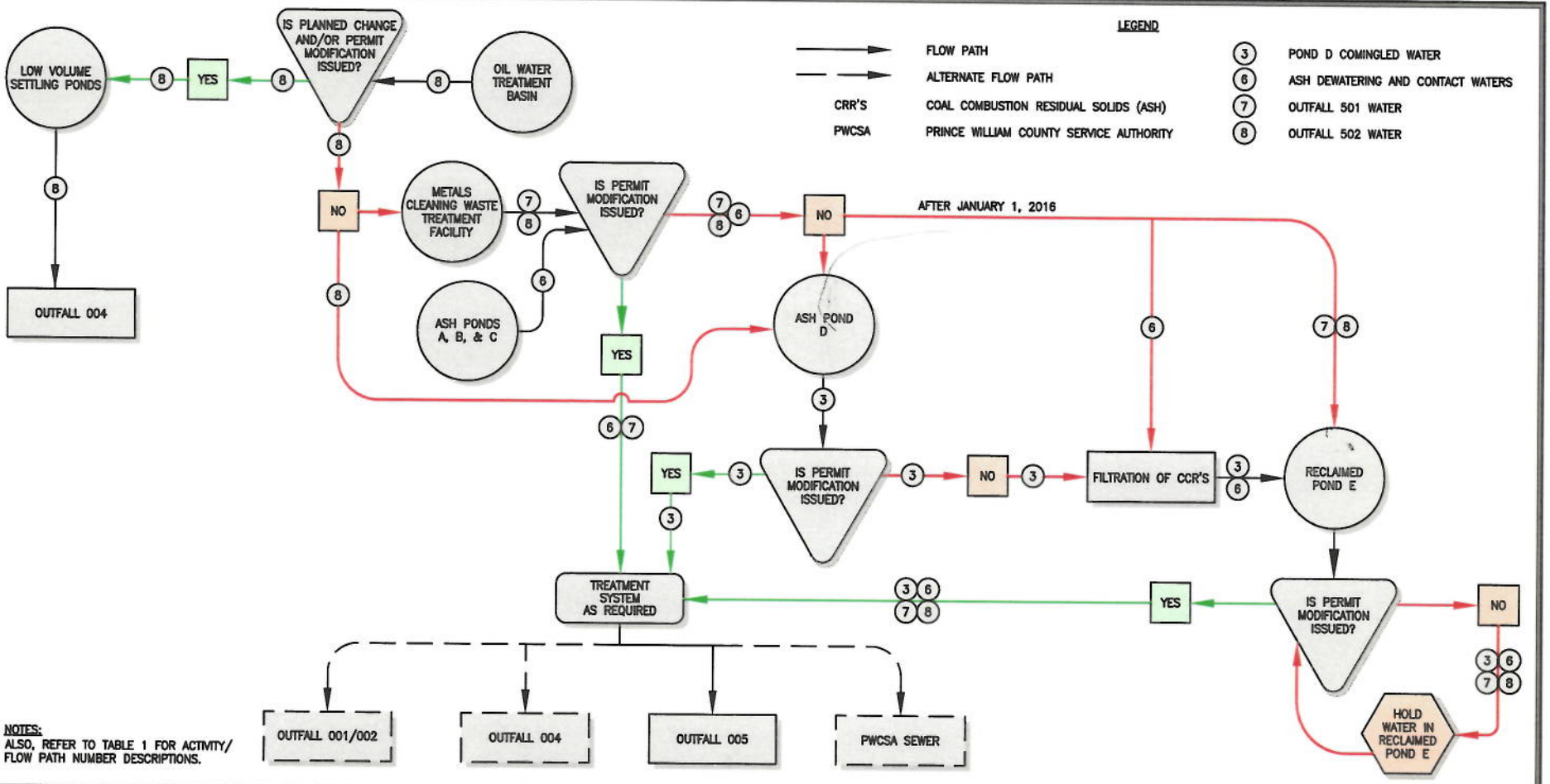

NO.:	DATE:	DWN:	CHK:	APV:	DESCRIPTION:

REVISION RECORD

DRAWING TITLE
INTERIM CONFIGURATION (DURING CONSTRUCTION)

PROJECT
POSSUM POINT POWER STATION
19000 POSSUM POINT ROAD
DUMFRIES, PRINCE WILLIAM COUNTY
VIRGINIA 22026

gai consultants

CLIENT
DOMINION RESOURCES SERVICE, INC.
5000 DOMINION BOULEVARD
GLEN ALLEN, VIRGINIA 23060

DRAWN BY:	CHECKED BY:	APPROVED BY:
LITZIJ	DEBARJD	QUINLSC
REVISION A/0	SCALE: AS SHOWN	ISSUE DATE: 08/14/2015
	SHEET NO.: 2 OF 3	

GAI FILE NUMBER: C150132-00-047-00-P-B2-002
GAI DRAWING NUMBER: C150132-00-047-00-P-B2-002

This drawing was produced with computer aided drafting technology and is supported by electronic drawing files. Do not revise this drawing via manual drafting methods.

ISSUING OFFICE: Richmond | 4198 Cox Road, Suite 114,Glen Allen, VA 23060

GAI CAD FILE PATH: Z:\Energy\2015\C150132.00 – DOM – Possum Point PS CCB\CAD\Production Drawings\PROCESS\C150132-00-047-00-P-B2-002.dwg

© 2015 GAI Consultants, Inc.

PLOTTED ON: 8/14/2015 9:19:37 PM PLOTTED BY: John DeBarbieri PLOT FILE: GAI.stb

00022353

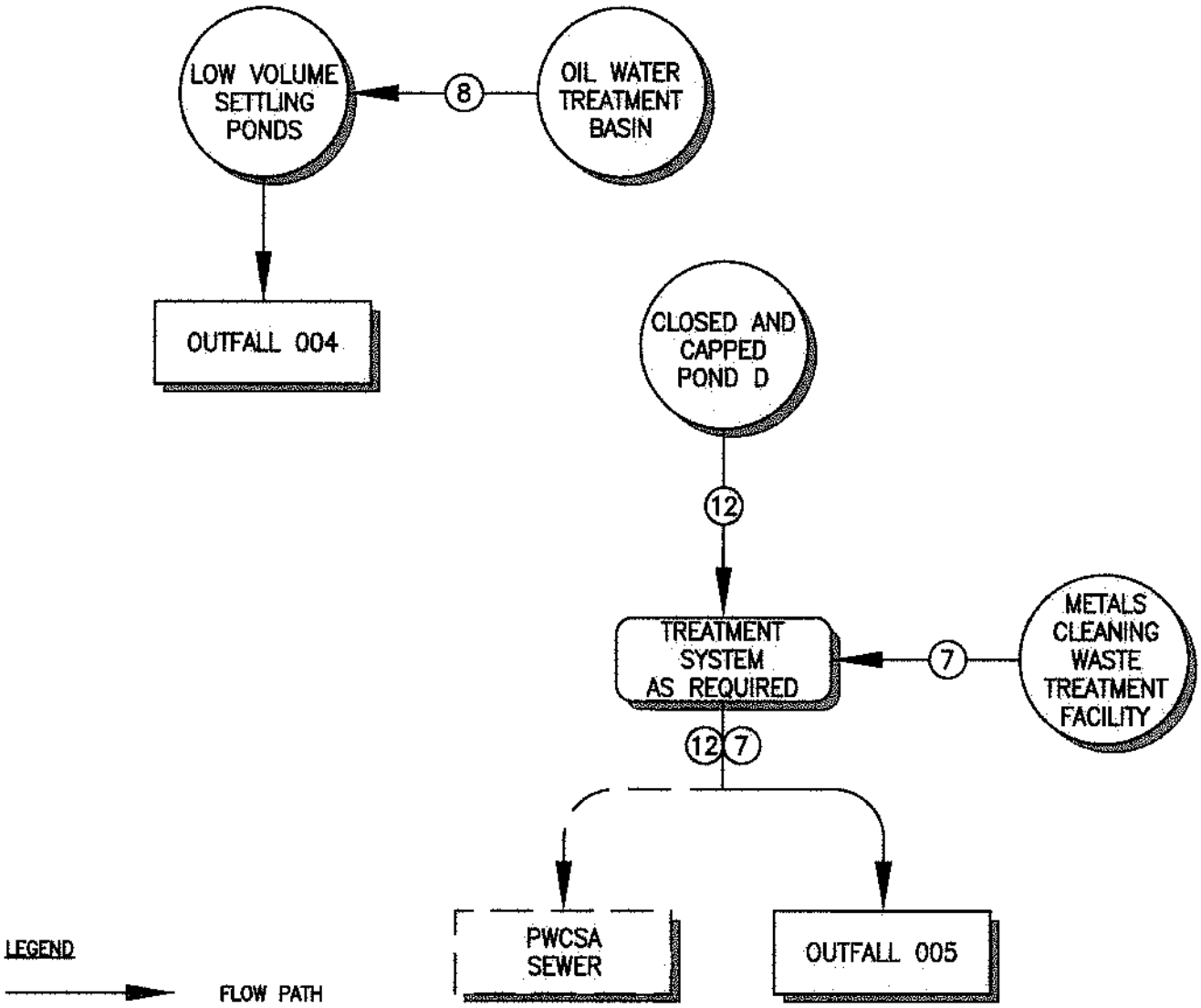

LEGEND

FLOW PATH

ALTERNATE FLOW PATH

PWCSA PRINCE WILLIAM COUNTY SERVICE AUTHORITY

(7) OUTFALL 501 WATER

(8) OUTFALL 502 WATER

(12) CLOSED ASH POND D PASSIVE UNDERDRAINAGE

NOTES:
ALSO, REFER TO TABLE 1 FOR ACTIVITY/FLOW PATH NUMBER DESCRIPTIONS.

DRAWING TITLE		GAI DRAWING NUMBER:	
FINAL CONFIGURATION (POST CONSTRUCTION)		C150132-00-047-00-P-A2-003	
PROJECT	gai consultants	GAI FILE NUMBER:	
POSSUM POINT POWER STATION 19000 POSSUM POINT ROAD DUMFRIES, PRINCE WILLIAM CO., VA 22026		C150132-00-047-00-P-A2-003	
		DRAWN BY: HULTBGC	CHECKED BY: DEBARJD / APPROVED BY: QUINLSC
CLIENT		SHEET NO.: 3 OF 3	SCALE: AS SHOWN / ISSUE DATE: 07/06/2015
DOMINION RESOURCES SERVICE, INC. 5000 DOMINION BOULEVARD GLEN ALLEN, VIRGINIA 23060		© 2015 GAI Consultants, Inc.	

This drawing was produced with computer aided drafting technology and is supported by electronic drawing files. Do not revise this drawing via manual drafting methods.

ISSUING OFFICE: Richmond | 4198 Cox Road, Suite 114, Glen Allen, VA 23060

PLOTTED ON: 8/14/2015 9:22:35 PM PLOTTED BY: John DeBarbieri PLOT FILE: GAI.stb

GAI CAD FILE PATH: Z:\Energy\2015\C150132.00 - DOM - Possum Point PS CCB\CAD\Production Drawings\PROCESS\C150132-00-047-00-P-A2-003.dwg