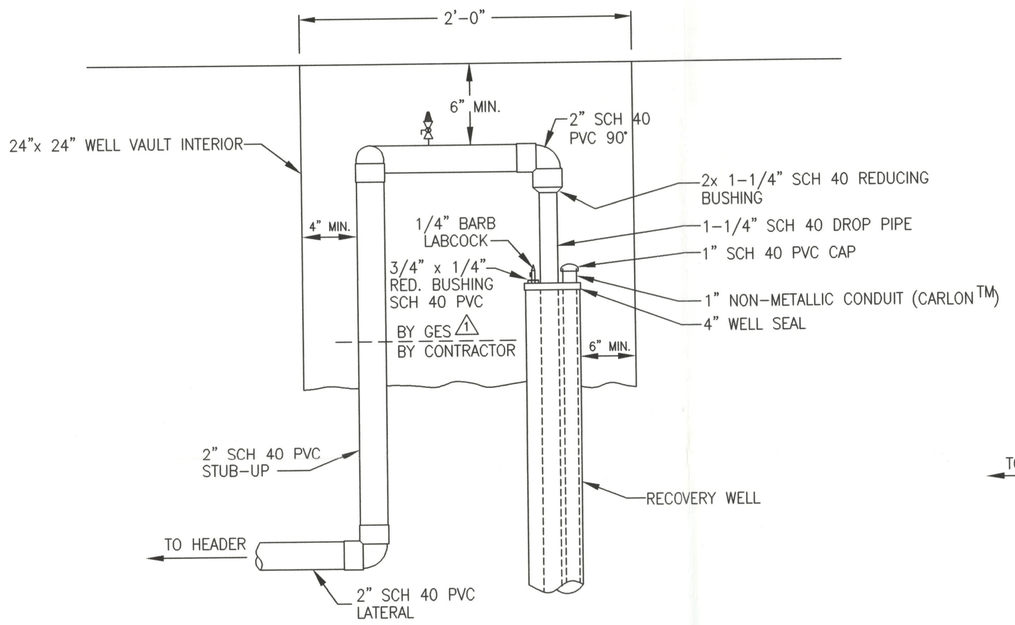

SIDE VIEW

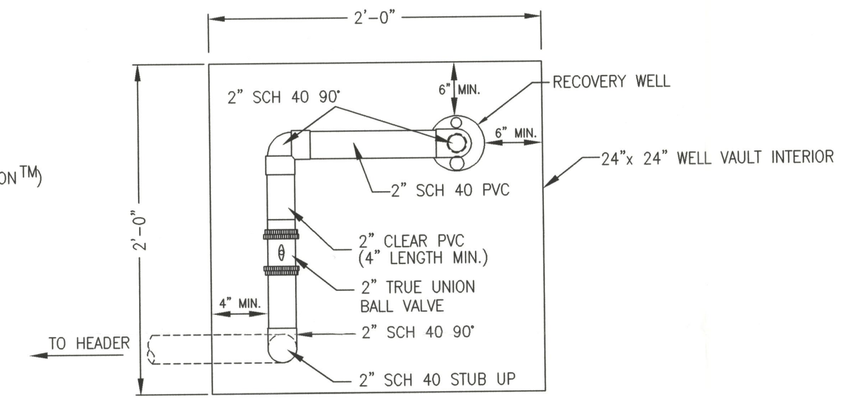

TOP VIEW

TYPICAL HVTPE RECOVERY WELL PIPING DETAIL

(TYPICAL OF RW-14, RW-15, RW-16, RW-17, RW-18, RW-19, RW-20, RW-21, RW-22, & RW-23 IN LINE LEAK AREA)
(TYPICAL OF RW-24, RW-25, RW-26, RW-27, RW-28, & RW-29 IN TANK FIELD AREA) 2

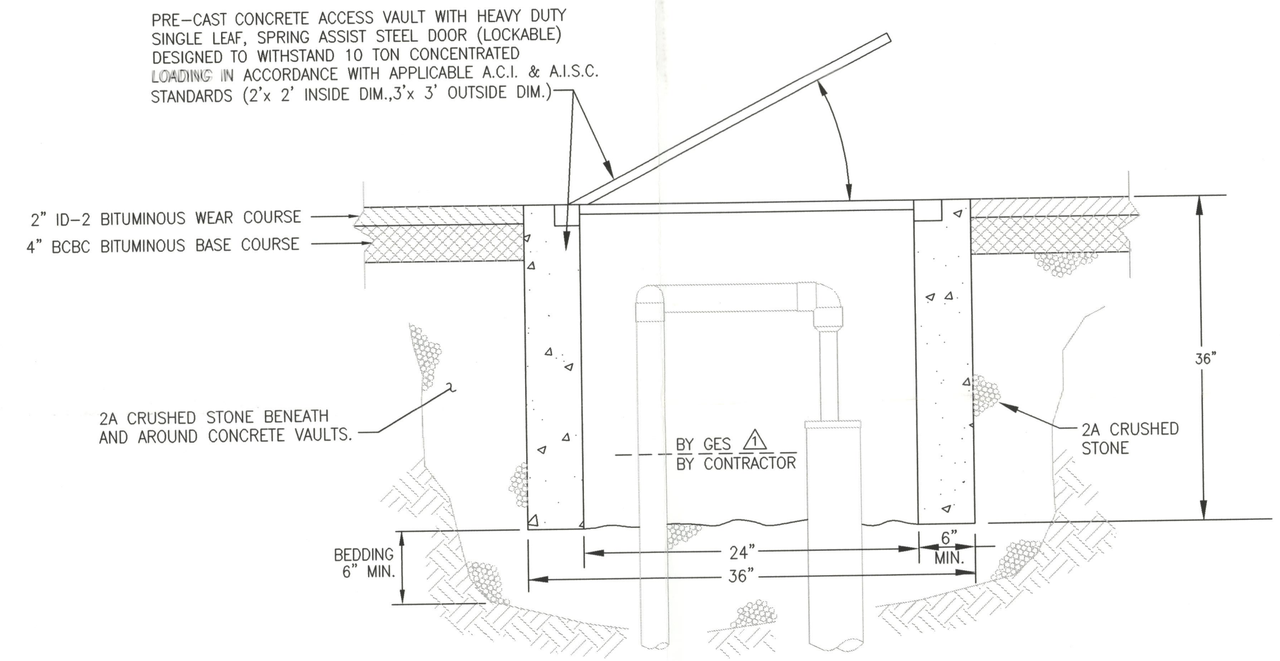

TYPICAL HVTPE RECOVERY WELL VAULT DETAIL FOR PRE-CAST ROAD BOXES

(TYPICAL OF RW-16, RW-17, RW-18, RW-20, RW-21, & RW-23 IN LINE LEAK AREA)
(TYPICAL OF RW-24, RW-28, & RW-29 IN TANK FIELD AREA) 2

LINE LEAK AREA RECOVERY WELL INFORMATION

WELL ID	USE	NEW OR EXISTING	TOTAL DEPTH (feet)	CASING DIA. (inches)	SCREEN INTERVAL (feet below grade)
RW-14	HVTPE	NEW	20	4	5 - 20
RW-15	HVTPE	NEW	20	4	5 - 20
RW-16	HVTPE	NEW	20	4	5 - 20
RW-17	HVTPE	NEW	20	4	5 - 20
RW-18	HVTPE	NEW	20	4	5 - 20
RW-19	HVTPE	NEW	20	4	5 - 20
RW-20	HVTPE	NEW	20	4	5 - 20
RW-21	HVTPE	NEW	20	4	5 - 20
RW-22	HVTPE	NEW	20	4	5 - 20
RW-23	HVTPE	NEW	20	4	5 - 20

TANK FIELD AREA RECOVERY WELL INFORMATION 2

WELL ID	USE	NEW OR EXISTING	TOTAL DEPTH (feet)	CASING DIA. (inches)	SCREEN INTERVAL (feet below grade)
RW-24	HVTPE	NEW	20	4	6 - 20
RW-25	HVTPE	NEW	20	4	6 - 20
RW-26	HVTPE	NEW	20	4	6 - 20
RW-27	HVTPE	NEW	20	4	6 - 20
RW-28	HVTPE	NEW	20	4	6 - 20
RW-29	HVTPE	NEW	20	4	6 - 20

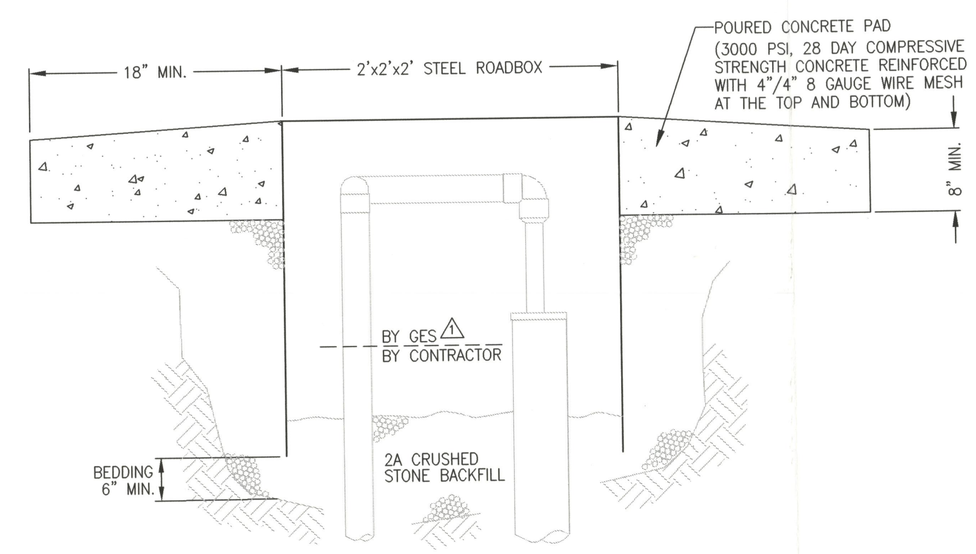

TYPICAL HVTPE RECOVERY WELL VAULT DETAIL FOR CAST-IN-PLACE ROAD BOXES

(TYPICAL OF RW-14, RW-15, RW-19, & RW-22 IN LINE LEAK AREA)
(TYPICAL OF RW-25, RW-26, & RW-27 IN TANK FIELD AREA) 2

REV.	DESCRIPTION	DATE
2	ADDED TANK FIELD AREA INFORMATION	3-19-99
1	INDICATED GES/CONTRACTOR PIPING TRANSITION	6-12-98

PROJECT NO: 0010 0050

HVTPE RECOVERY WELL PIPING & VAULT DETAILS (LINE LEAK & TANK FIELD AREAS)

DESIGNED BY: CBW
DRAWN BY: GPL
CHECKED BY: MAS
APPROVED BY: KS

PROPOSED REMEDIATION SYSTEM
QUEBECOR PRINTING ATGLEN INC.
ATGLEN, PENNSYLVANIA

GES GROUNDWATER & ENVIRONMENTAL SERVICES, INC.
410 EAGLEVIEW BLVD., SUITE 110
EXTON PENNSYLVANIA 19431

SCALE: NOT TO SCALE | DATE: 9APRIL98 | DRAWING NO: FIGURE 8