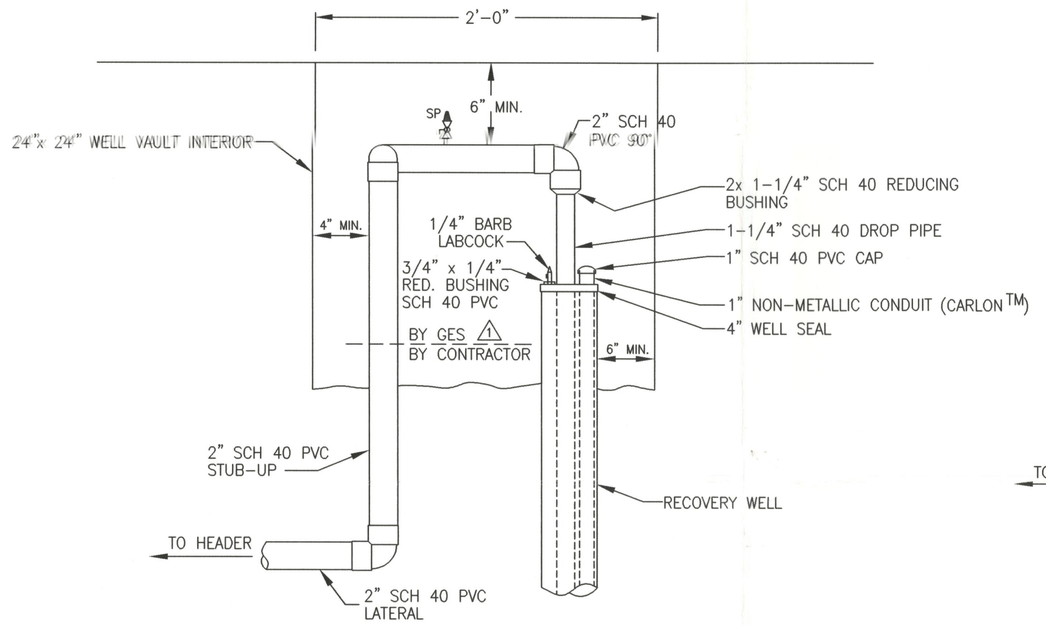

SIDE VIEW

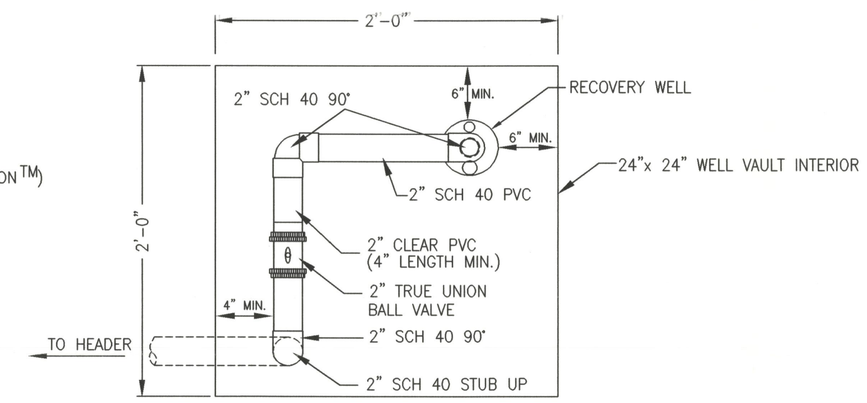

TOP VIEW

TYPICAL HVTPE RECOVERY WELL PIPING DETAIL
FOR BELOW-GROUND PIPING MANIFOLDS

(TYPICAL OF RW-3, RW-4, RW-5, RW-6, RW-10, RW-12, RW-13, & MW-10)

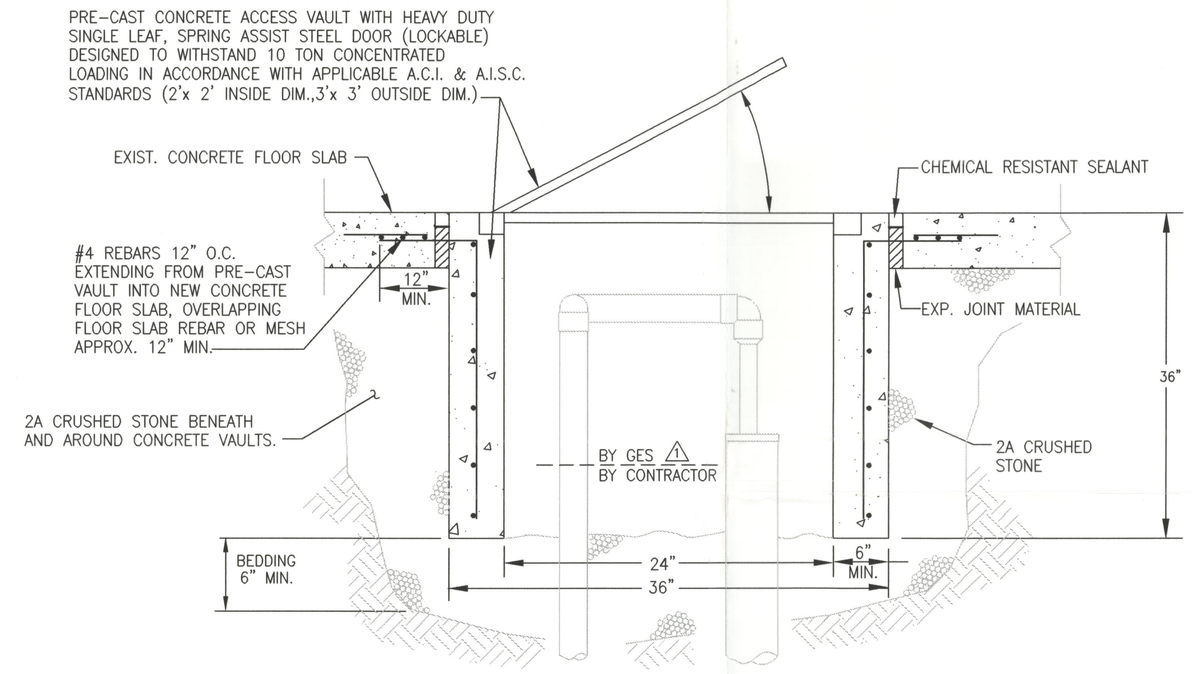

NOTE:
RW-3 & RW-4 VAULTS (LOCATED INSIDE OF THE PAPER STORAGE AREA) WERE INSTALLED DURING THE QUEBECOR BUILDING EXPANSION IN 1997. NO OTHER VAULTS HAVE BEEN INSTALLED.

TYPICAL HVTPE RECOVERY WELL VAULT DETAIL
FOR VAULTS IN PAPER STORAGE AREA

(TYPICAL OF RW-3 & RW-4)

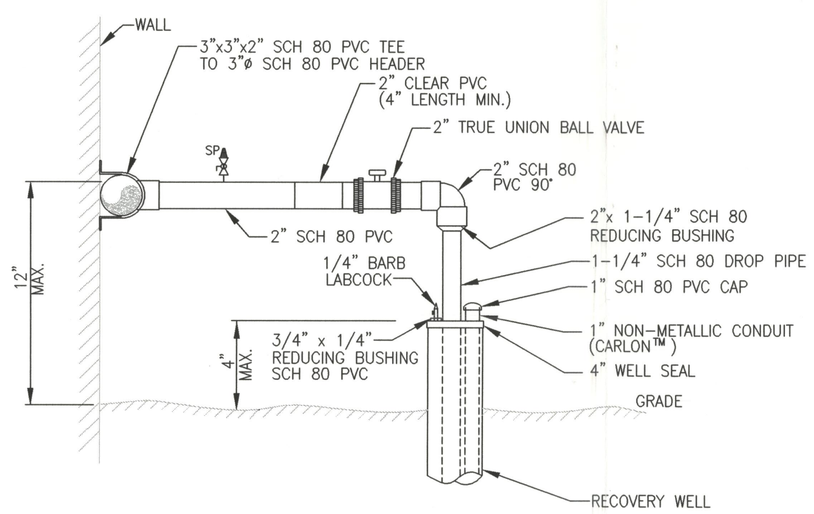

SIDE VIEW

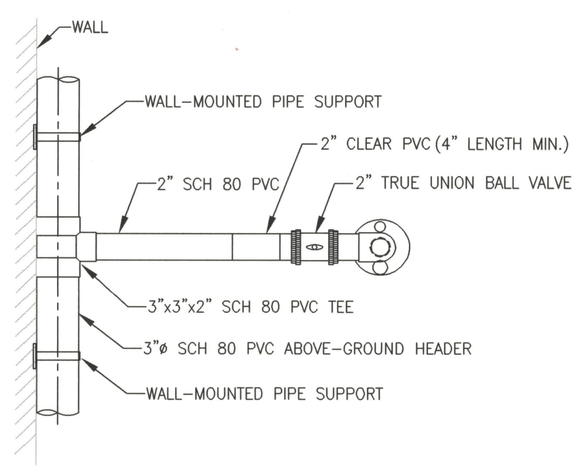

TOP VIEW

NOTE:
ALL ABOVE-GRADE PIPING WILL BE INSTALLED, HEAT TRACED, AND INSULATED BY GES.

TYPICAL HVTPE RECOVERY WELL PIPING DETAIL
FOR ABOVE-GROUND MANIFOLDS

(TYPICAL OF RW-2, RW-7, RW-8, RW-9, RW-11,S-1, & S-3)

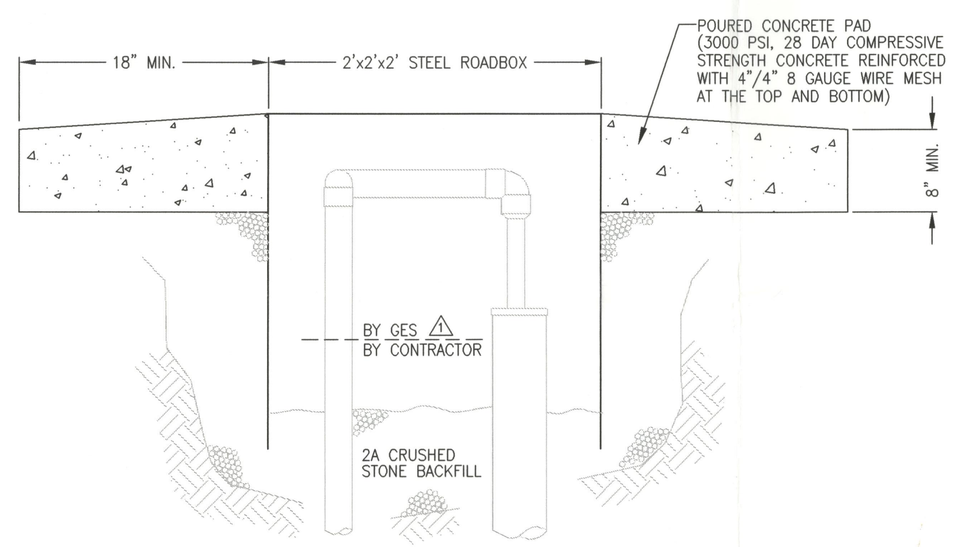

TYPICAL HVTPE RECOVERY WELL VAULT DETAIL
FOR CAST-IN-PLACE ROAD BOXES

(TYPICAL OF RW-5, RW-6, RW-10, RW-12, RW-13, & MW-10)

RAILROAD SIDING AREA RECOVERY WELL INFORMATION

WELL ID	USE	NEW OR EXISTING	TOTAL DEPTH (feet)	CASING DIA. (inches)	SCREEN INTERVAL (feet below grade)
RW-2	HVTPE	EXISTING			
RW-3	HVTPE	EXISTING	20	4	5 - 20
RW-4	HVTPE	EXISTING	20	4	5 - 20
RW-5	HVTPE	NEW	20	4	5 - 20
RW-6	HVTPE	NEW	20	4	5 - 20
RW-7	HVTPE	NEW	20	4	5 - 20
RW-8	HVTPE	NEW	20	4	5 - 20
RW-9	HVTPE	NEW	20	4	5 - 20
RW-10	HVTPE	NEW	22	4	10 - 22
RW-11	HVTPE	NEW	20	4	5 - 20
RW-12	HVTPE	NEW	22	4	10 - 22
RW-13	HVTPE	NEW	22	4	10 - 22
MW-10	HVTPE	EXISTING	17	4	4 - 17
S-3	HVTPE	EXISTING	17	4	2 - 17
S-1	HVTPE	EXISTING	18	2	3 - 18

REV.	DESCRIPTION	DATE
1	INDICATED GES/CONTRACTOR PIPING TRANSITION	6-12-98

PROJECT NO: 0010 0050

HVTPE RECOVERY WELL PIPING & VAULT DETAILS (RAILROAD SIDING AREA)

DESIGNED BY: CW

DRAWN BY: GPL

CHECKED BY: MS

APPROVED BY: KS

PROPOSED REMEDIATION SYSTEM
QUEBECOR PRINTING ATGLEN INC.
ATGLEN, PENNSYLVANIA

GES GROUNDWATER & ENVIRONMENTAL SERVICES, INC.
410 EAGLEVIEW BLVD., SUITE 110
EXTON PENNSYLVANIA 19431

SCALE: NOT TO SCALE | DATE: 9APRIL98 | DRAWING NO: QUE0020 | FIGURE 7

GES Groundwater Services, Inc.