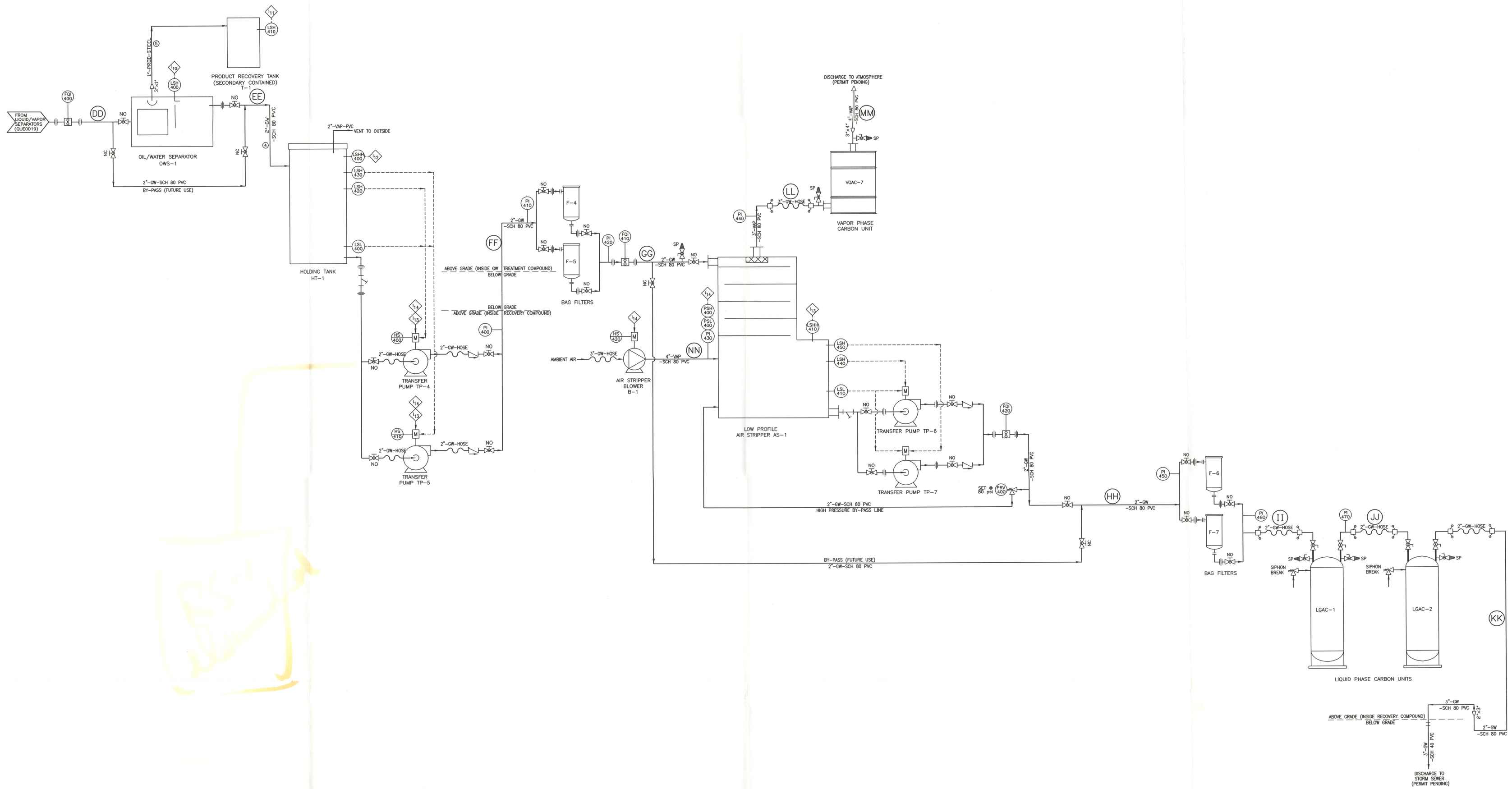

PIPE DESIGNATION INFORMATION ⚠

PIPE DESIGNATION	LOCATION	MEDIA	# OF OPERATING WELLS	PRESSURE	VAPOR STREAM FLOW RATE (scfm)	VAPOR STREAM BTEX LOADING (lb/day)	GROUNDWATER STREAM FLOW RATE (gpm)	GROUNDWATER STREAM BTEX CONC. (ppb)
DD	Equipment Container – Pre OWS-1	Groundwater/Solvent	20 of 31	2 psi pressure	NA	NA	11.16 ave/18.0 inst. max	11,154
EE	Equipment Container – Post OWS-1	Groundwater	20 of 31	no pressure – gravity feed	NA	NA	11.16 ave/18.0 inst. max	11,154
FF	Equipment Container – Post TP-4/TP-5	Groundwater	20 of 31	20 psi pressure	NA	NA	11.16 ave/25.0 inst. max	11,154
GG	Equipment Container – Pre AS-1	Groundwater	20 of 31	2 psi pressure	NA	NA	11.16 ave/25.0 inst. max	11,154
HH	Equipment Container – Post AS-1	Groundwater	20 of 31	40 psi pressure	NA	NA	11.16 ave/35.0 inst. max	111.54
II	Equipment Container – Pre LGAC-1	Groundwater	20 of 31	20 psi pressure	NA	NA	11.16 ave/35.0 inst. max	111.54
JJ	Equipment Container – Post LGAC-1	Groundwater	20 of 31	20 psi pressure	NA	NA	11.16 ave/35.0 inst. max	1.12
KK	Equipment Container – Post LGAC-2	Groundwater	20 of 31	10 psi pressure	NA	NA	11.16 ave/35.0 inst. max	< 0.1
LL	Equipment Container – Post B-1	Vapor	20 of 31	12" H2O pressure	300–700	0	NA	NA
MM	Equipment Container – Pre VGAC-7	Vapor	20 of 31	4" H2O pressure	300–700	1.50	NA	NA
NN	Equipment Container – Post VGAC-7	Vapor	20 of 31	< 0.01" H2O pressure	300–700	< 0.1	NA	NA

NOTES:

④ THE OIL/WATER SEPARATOR WILL GRAVITY DRAIN TO HOLDING TANK HT-1.

⑤ PRODUCT WILL GRAVITY DRAIN FROM THE OIL/WATER SEPARATOR TO THE PRODUCT RECOVERY TANK.

REV.	DESCRIPTION	DATE
⚠	REVISE PIPE DESIGNATION INFORMATION & REMOVE RECOVERY SUMPS RS-1 & RS-2	3-19-99

PROJECT NO: 0010 0050

PIPING & INSTRUMENTATION DIAGRAM GROUNDWATER RECOVERY & TREATMENT SYSTEM

DESIGNED BY: CBW

DRAWN BY: GPL

CHECKED BY: MAS

APPROVED BY: KS

PROPOSED REMEDIATION SYSTEM

QUEBECOR PRINTING ATGLEN INC.
ATGLEN, PENNSYLVANIA

GES GROUNDWATER & ENVIRONMENTAL SERVICES, INC.
410 EAGLEVIEW BLVD., SUITE 110
EXTON PENNSYLVANIA 19431

SCALE: NOT TO SCALE | DATE: 3-19-99 | DRAWING NO: FIGURE 6