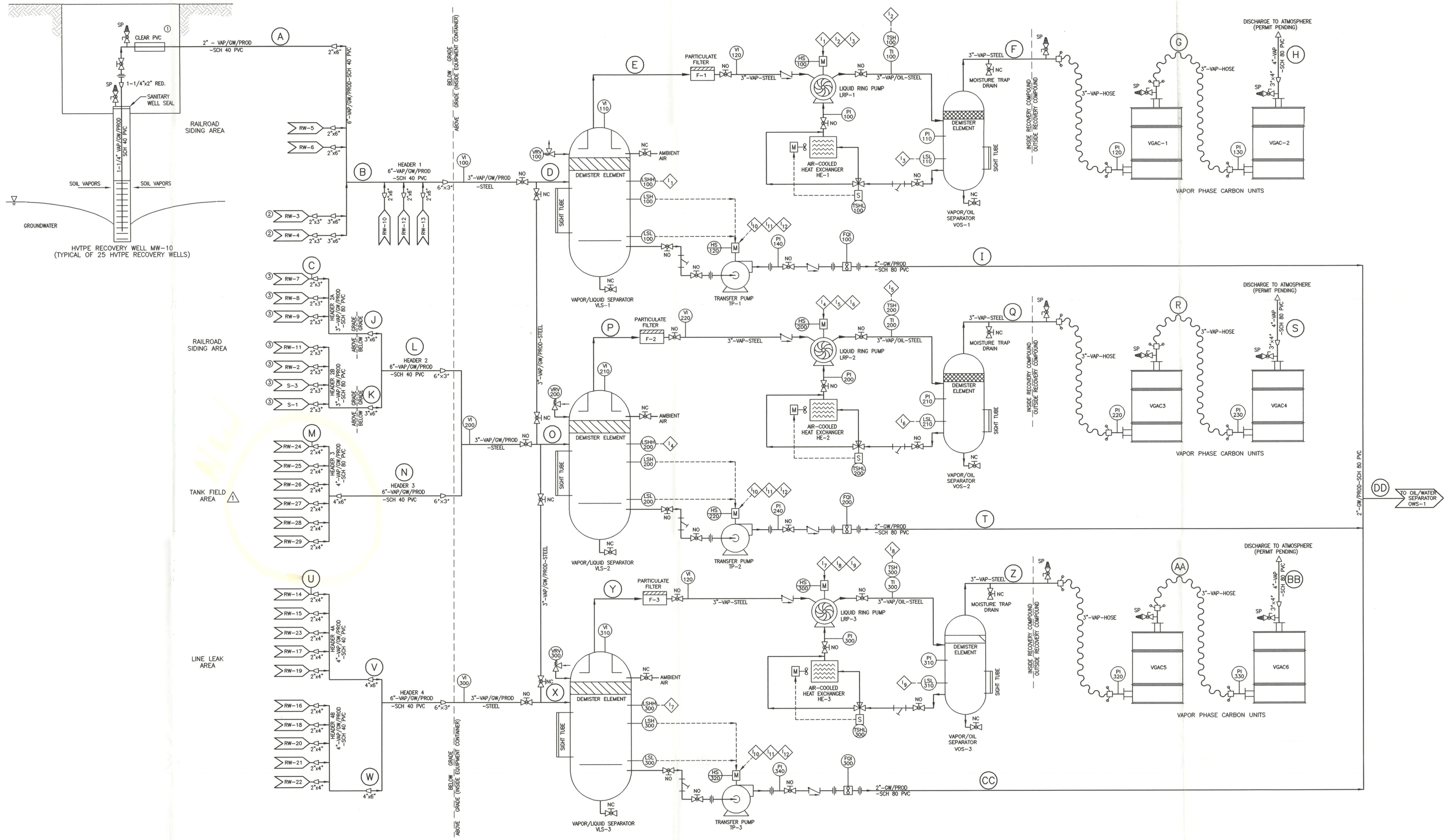

PIPE DESIGNATION INFORMATION ⚠1

PIPE DESIGNATION	LOCATION	MEDIA	AVE. # OF OPERATING WELLS	VACUUM/PRESSURE	VAPOR STREAM FLOW RATE (scfm)	VAPOR STREAM BTEX CONC. (ppmv)	VAPOR STREAM BTEX LOADING (lb/day)	GROUNDWATER STREAM FLOW RATE (gpm)	GROUNDWATER STREAM BTEX CONC. (ppb)
A	Railroad Siding Area – Individual Well	Vapor/Groundwater/Solvent	1	15.4" Hg vacuum	15	150	0.8	0.41	36,699
B	Railroad Siding Area	Vapor/Groundwater/Solvent	3 of 5	17.4" Hg vacuum	45	150	2.5	1.23	27,524
C	Railroad Siding Area – Individual Well	Vapor/Groundwater/Solvent	1	15.4" Hg vacuum	15	150	0.8	0.41	36,699
D	Equipment Container – Pre VLS-1 (Header 1)	Vapor/Groundwater/Solvent	6 of 8	20" Hg vacuum	90	150	5	2.46	27,524
E	Equipment Container – Post VLS-1/Pre LRP-1	Vapor	6 of 8	21" Hg vacuum	90	150	5	NA	NA
F	Equipment Container – Post LRP-1/Pre VGAC-1	Vapor	6 of 8	10" H2O pressure	90	150	5	NA	NA
G	Outside Equipment Container – Post VGAC-1/Pre VGAC-2	Vapor	6 of 8	3" H2O pressure	90	1.5	0.05	NA	NA
H	Outside Equipment Container – Post VGAC-2/Atm. Discharge	Vapor – Treated	6 of 8	0.1" H2O pressure	90	< 1	< 0.01	NA	NA
I	Equipment Container – Post VLS-1	Groundwater/Solvent	6 of 8	4 psi pressure	NA	NA	NA	2.46 ave/ 6.0 inst.	27,524
J	Railroad Siding Area – Header 2A	Vapor/Groundwater/Solvent	2 of 3	18.0" Hg vacuum	30	150	1.7	0.82	27,524
K	Railroad Siding Area – Header 2B	Vapor/Groundwater/Solvent	2 of 3	18.0" Hg vacuum	30	150	1.7	0.82	27,524
L	Equipment Container – Header 2	Vapor/Groundwater/Solvent	4 of 7	20.0" Hg vacuum	60	150	3.4	1.64	27,524
M	Tank Field Area – Individual Well	Vapor/Groundwater/Solvent	1	13.9" Hg vacuum	12	570	2.6	0.86	1,379
N	Equipment Container – Header 3	Vapor/Groundwater/Solvent	3 of 6	16.0" Hg vacuum	36	570	7.7	2.58	1,035
O	Equipment Container – Pre VLS-2 (Header 2 and Header 3)	Vapor/Groundwater/Solvent	7 of 13	20" Hg vacuum	96	330	11.8	4.22	11,366
P	Equipment Container – Post VLS-2/Pre LRP-2	Vapor	7 of 13	21" Hg vacuum	96	330	11.8	NA	NA
Q	Equipment Container – Post LRP-2/Pre VGAC-3	Vapor	7 of 13	8" H2O pressure	96	330	11.8	NA	NA
R	Outside Equipment Container – Post VGAC-3/Pre VGAC-4	Vapor	7 of 13	2" H2O pressure	96	3.3	0.12	NA	NA
S	Outside Equipment Container – Post VGAC-4/Atm. Discharge	Vapor – Treated	7 of 13	0.1" H2O pressure	96	< 1	< 0.01	NA	NA
T	Equipment Container – Post VLS-2	Groundwater/Solvent	7 of 13	4 psi pressure	NA	NA	NA	4.22 ave/ 6.0 inst.	11,366
U	Line Leak Area – Individual Well	Vapor/Groundwater/Solvent	1	14.6" Hg vacuum	13	360	1.2	0.64	2,665
V	Line Leak Area – Header 4A	Vapor/Groundwater/Solvent	4 of 5	16.8" Hg vacuum	52	360	7.0	2.56	1,999
W	Line Leak Area – Header 4B	Vapor/Groundwater/Solvent	3 of 5	17.2" Hg vacuum	39	360	5.2	1.92	1,999
X	Equipment Container – Pre VLS-3 (Header 4)	Vapor/Groundwater/Solvent	7 of 10	20" Hg vacuum	91	360	12.2	4.48	1,999
Y	Equipment Container – Post VLS-3/Pre LRP-3	Vapor	7 of 10	21" Hg vacuum	91	360	12.2	NA	NA
Z	Equipment Container – Post LRP-3/Pre VGAC-5	Vapor	7 of 10	10" H2O pressure	91	360	12.2	NA	NA
AA	Outside Equipment Container – Post VGAC-5/Pre VGAC-6	Vapor	7 of 10	3" H2O pressure	91	3.6	0.12	NA	NA
BB	Outside Equipment Container – Post VGAC-6/Atm. Discharge	Vapor – Treated	7 of 10	0.1" H2O pressure	91	< 1	< 0.01	NA	NA
CC	Equipment Container – Post VLS-3	Groundwater/Solvent	7 of 10	4 psi pressure	NA	NA	NA	4.48 ave/ 6.0 inst.	1,999
DD	Equipment Container – Pre OWS-1	Groundwater/Solvent	20 of 31	2 psi pressure	NA	NA	NA	11.16 ave/18.0 inst.	11,154

NOTES:

1. FOR HVTPE RECOVERY WELL PIPING & VAULT DETAILS SEE FIGURES 7 & 8.
2. PIPING FROM RW-3 AND RW-4 TO THE 6" PVC HEADER ALREADY EXISTS.
3. RECOVERY WELLS RW-2, RW-7, RW-8, RW-9, RW-11, S-1 AND S-3 WILL NOT BE CONTAINED WITHIN WELL VAULTS DUE TO THEIR PROXIMITY TO THE RAILROAD TRACKS. ALL ASSOCIATED PIPING WILL BE CONNECTED ABOVE-GRADE.

REV.	DESCRIPTION	DATE
⚠1	REVISE PIPE DESIGNATION INFORMATION & ADD TANK FIELD AREA WELLS RW-24 THRU 29	3-19-99

PROJECT NO: 0010 0050

PIPING & INSTRUMENTATION DIAGRAM
HVTPE RECOVERY SYSTEM

DESIGNED BY: CBW

PROPOSED REMEDIATION SYSTEM
QUEBECOR PRINTING ATGLEN INC.
ATGLEN, PENNSYLVANIA

DRAWN BY: GPL

CHECKED BY: MAS

APPROVED BY: KS

GES GROUNDWATER & ENVIRONMENTAL SERVICES, INC.
410 EAGLEVIEW BLVD., SUITE 110
EXTON PENNSYLVANIA 19431

SCALE: NOT TO SCALE | DATE: 3-19-99 | DRAWING NO: FIGURE 5

C:\common\GES\ Design\ p-01.dwg