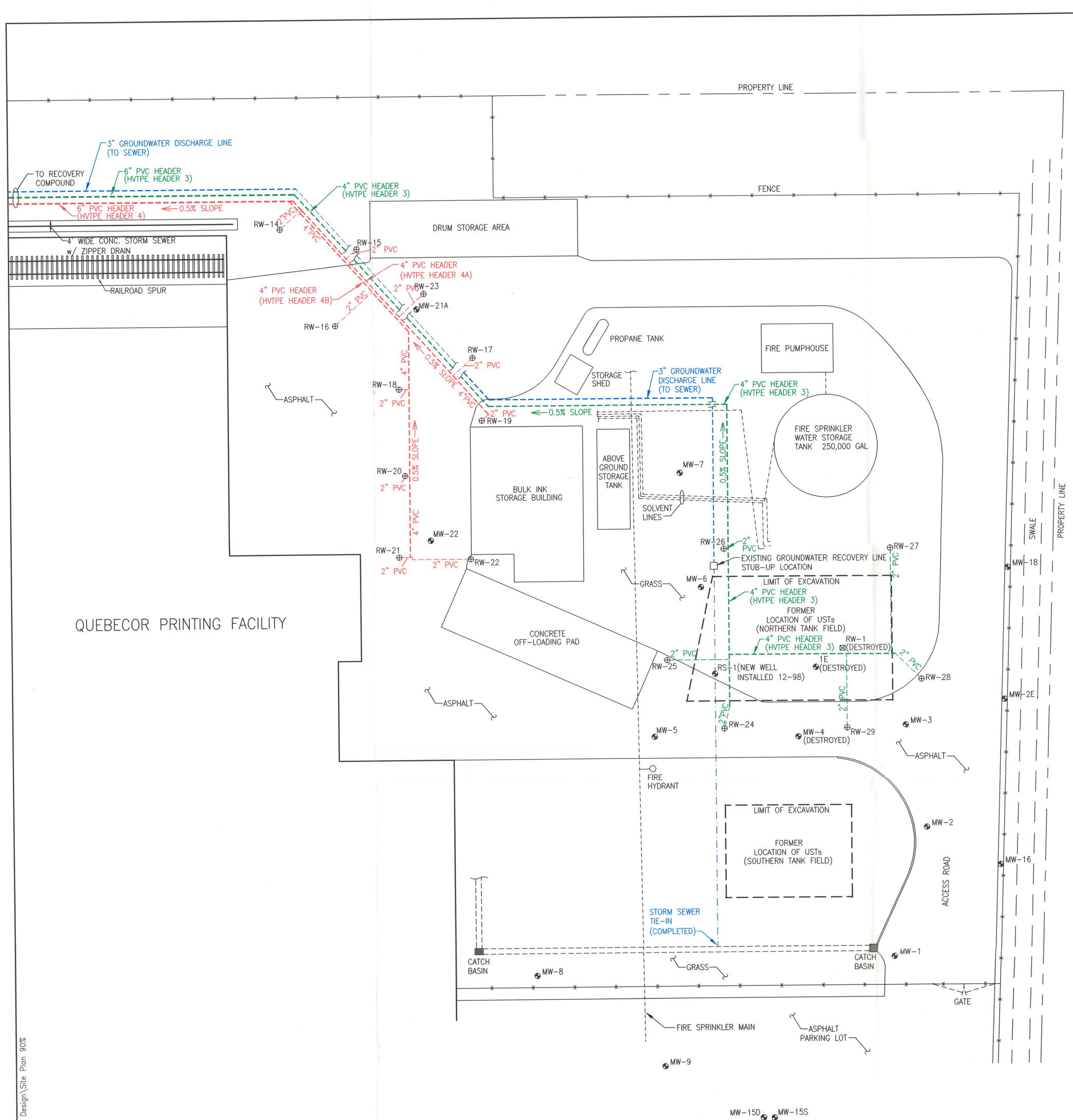

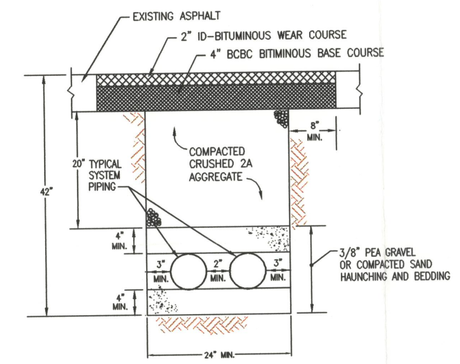

TYPICAL TRENCH DETAILS FOR PAVED AREAS

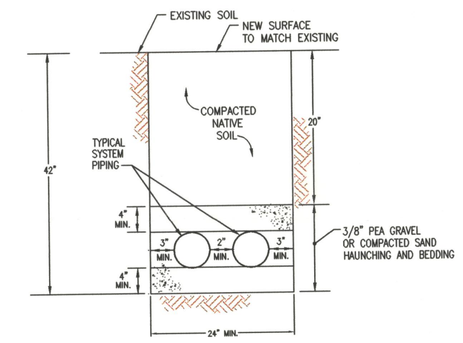

TYPICAL TRENCH DETAILS FOR UNPAVED AREAS

NOTE: THE NUMBER OF PIPES WITHIN EACH TRENCH WILL VARY.

TYPICAL TRENCH CROSS-SECTIONS

NOT TO SCALE

LEGEND

- EXISTING MONITORING OR RECOVERY WELL
- PROPOSED RECOVERY WELL
- PROPOSED BELOW GRADE PIPING
- EXISTING BELOW GRADE PIPING

NOTES:

1. ONE WELL DESIGNATED AS A COMPLIANCE MONITORING POINT (RW-1) WAS DESTROYED DURING UST REMOVAL ACTIVITIES. THIS COMPLIANCE POINT WAS REPLACED WITH RECOVERY SUMP RS-1.
2. PROPOSED HVTPE AND GROUNDWATER DISCHARGE PIPING DIMENSIONS ARE NOT TO SCALE.

Revised

PROJECT NO: 0010 0050	SITE PLAN: TANK FIELD & LINE LEAK AREAS
DESIGNED BY: CBW	PROPOSED REMEDIATION SYSTEM
DRAWN BY: GPL	QUEBECOR PRINTING ATGLEN INC. ATGLEN, PENNSYLVANIA
CHECKED BY: MAS	GES GROUNDWATER & ENVIRONMENTAL SERVICES, INC. 410 EAGLEVIEW BLVD., SUITE 110 EXTON PENNSYLVANIA 19431
APPROVED BY: KS	
SCALE: 1" = 20'	DATE: 3-23-99 DRAWING NO: FIGURE 2

\Quebecor\90% Design\Site Plan 90%