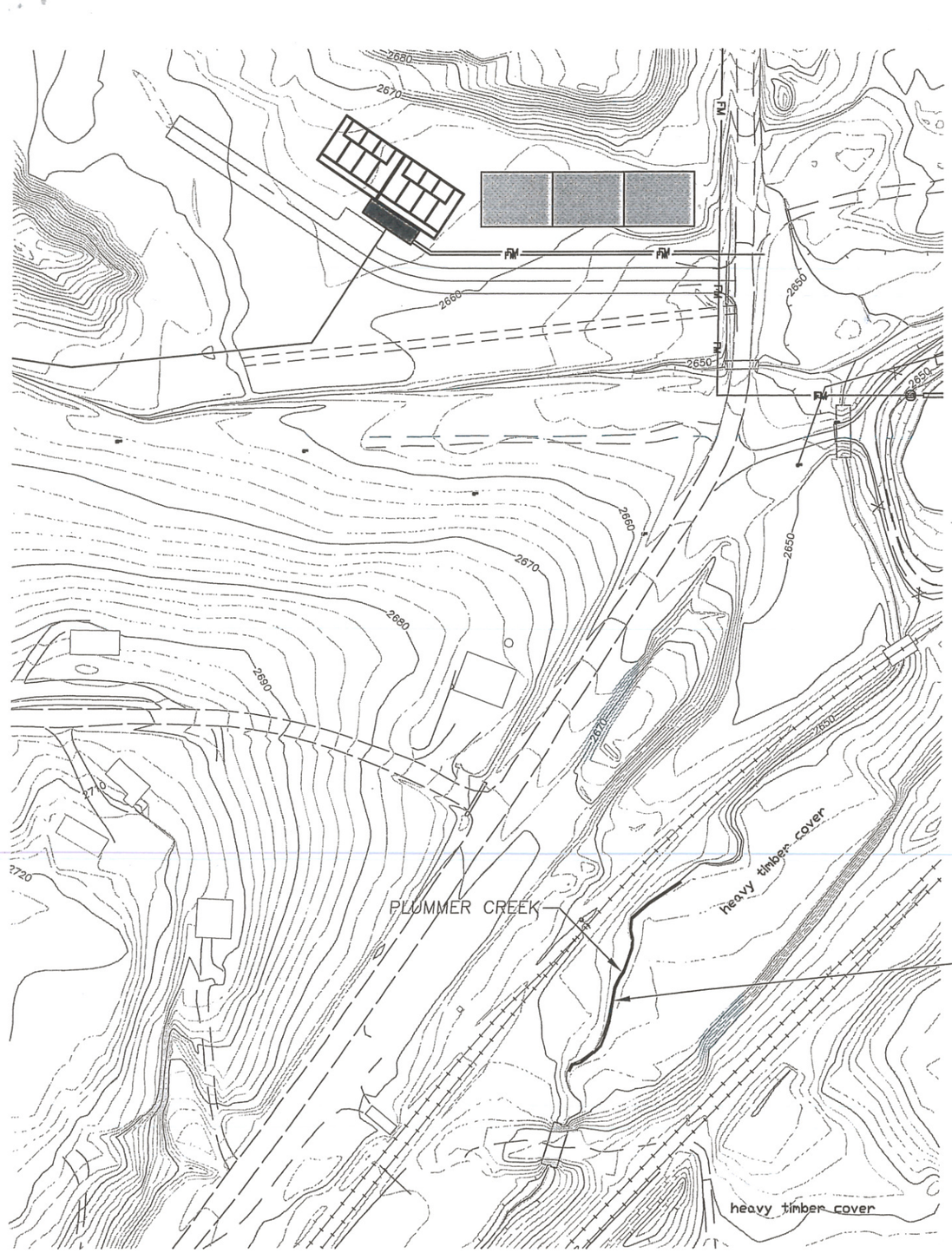

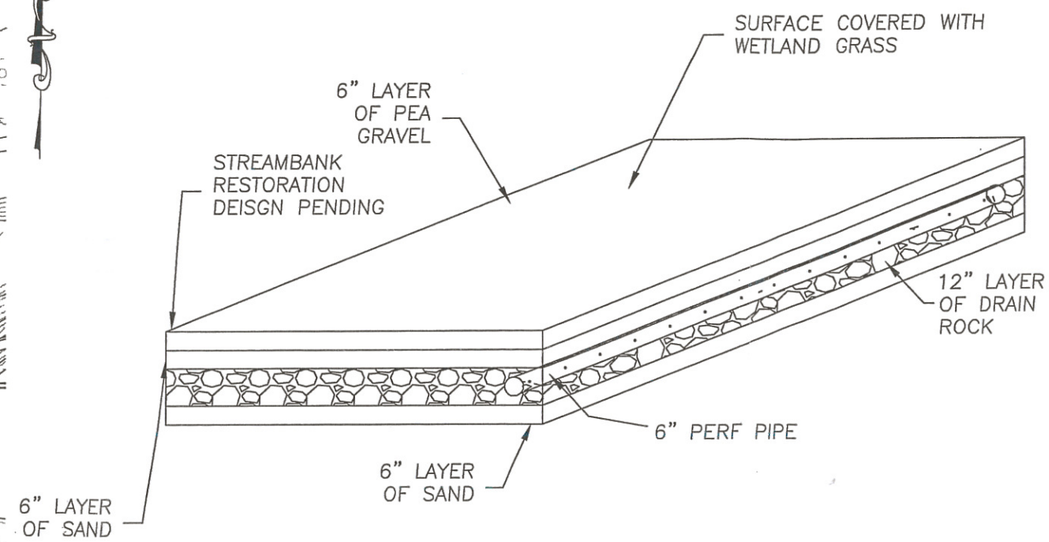

ISOMETRIC VIEW

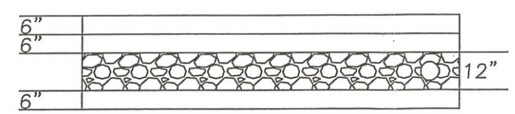

SECTION VIEW

FIGURE: EX1

USKH W.O. 1057200

Date: 01-28-2008

CAD File:

Scale: NTS

Checked: AEG

Drawn: MKO

USKH

Engineering • Land Surveying
Planning • Architectural

Sheet Title: RIPARIAN DISCHARGE WETLAND

Project: PLUMMER WASTEWATER TREATMENT PLANT

Client: CITY OF PLUMMER, IDAHO

9

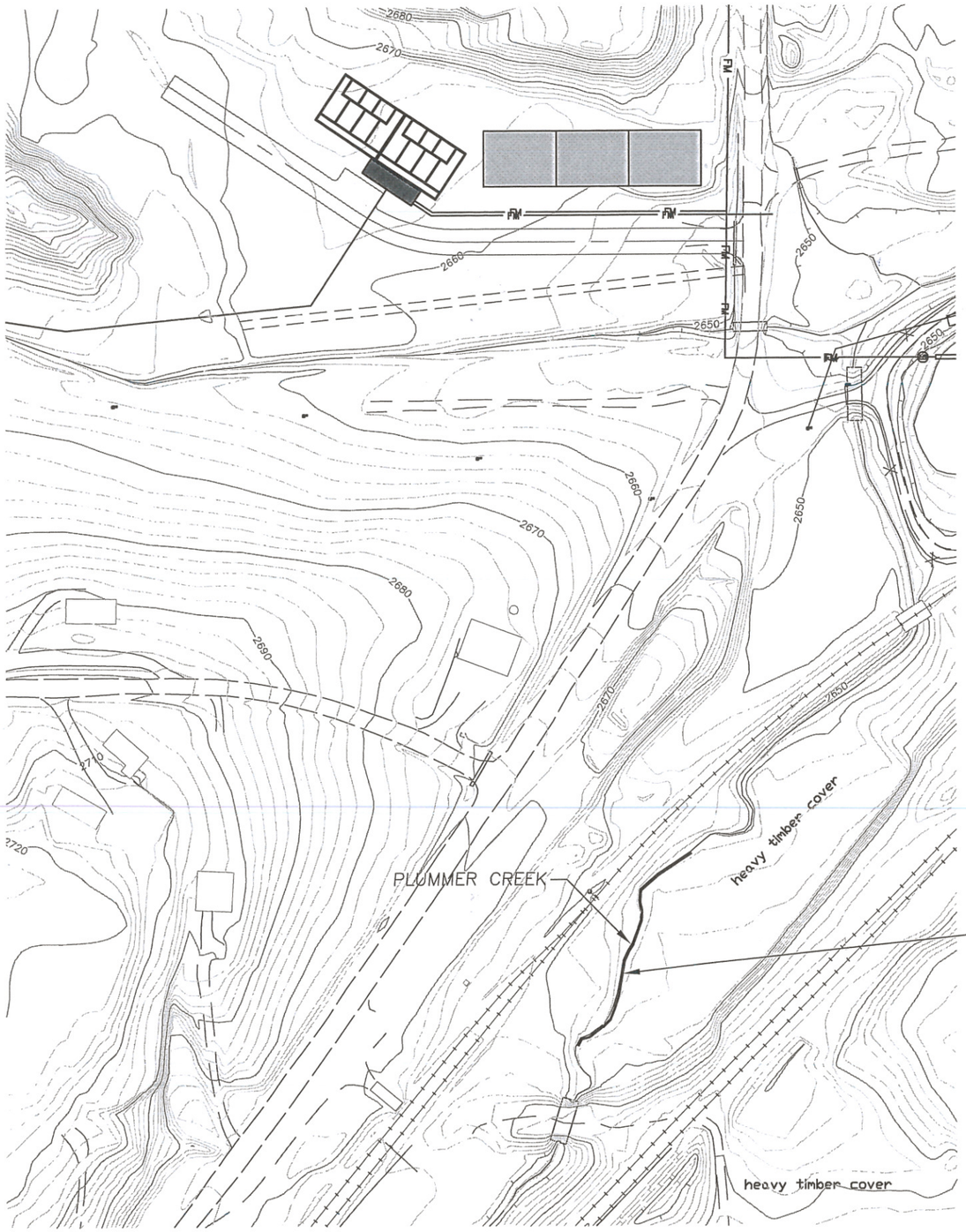

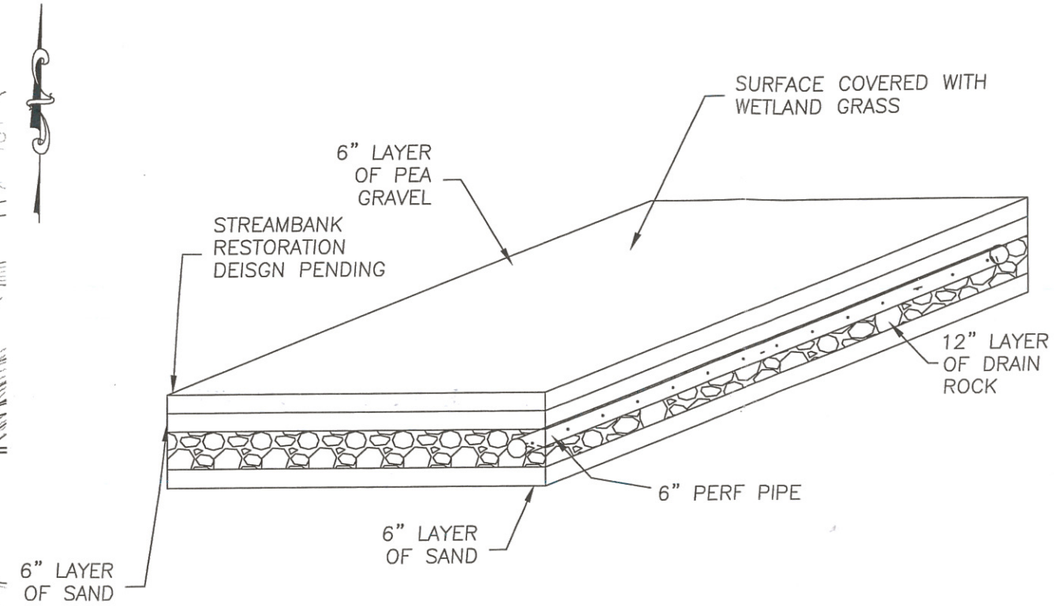

ISOMETRIC VIEW

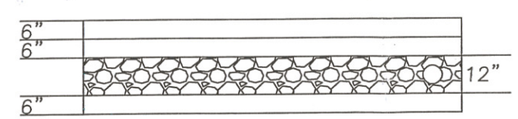

SECTION VIEW

FIGURE: EX 1

Date: 01-28-2008	USKH W.O. 1057200
Scale: NTS	CAD File:
Drawn: MKO	Checked: AEG

USKH
Engineering • Land Surveying
Planning • Architectural

Sheet Title: RIPARIAN DISCHARGE WETLAND

Project: PLUMMER WASTEWATER TREATMENT PLANT

Client: CITY OF PLUMMER, IDAHO

USKH
SHARED VISION. UNIFIED APPROACH.

January 8, 2009

Susan Poulsom
US EPA Region 10
1200 Sixth Street
Seattle, WA 98101

RECEIVED
JAN 12 2009
OFFICE OF WATERSHEDS

Subject: NPDES Permit Renewal Application, City of Plummer

Dear Ms. Poulsom:

USKH Inc. on behalf of the City of Plummer is submitting the attached NPDES permit renewal application, including forms 1 and 2A NDPES, for the City's wastewater treatment facilities. The City has also requested approval of this permit application from the Coeur d'Alene Tribe as the designated water quality agency with jurisdiction over the receiving water, Plummer Creek. The request includes asking that the Coeur d'Alene Tribe's representative forward their approval letter directly to you at EPA.

This application includes two outfall descriptions, one for the present outfall, Outfall 1, located in the northeast corner of the existing treatment facility site, and Outfall 1B, located approximately 3,800 feet south-southwest of the new treatment facility site. Both outfalls are shown on Exhibit 1, accompanying this letter and the application forms. Supplemental information pursuant to Form 2A, Part B, Item B.5, follows:

Implementation Schedule:

Projected New Wastewater Treatment Facility Bid Advertisement Date:	Feb. 19, 2009
Projected Wastewater Treatment Facility Bid Opening Date:	Mar. 31, 2009
Projected Wastewater Treatment Facility Construction Complete:	May 28, 2010
Projected Wastewater Treatment Facility Commissioning Complete:	Aug. 31, 2010

Plans and Specifications:

Plans include civil, architectural, electrical, structural and mechanical guidance for construction of the new facility. Plans are currently being reviewed internally within USKH, at USDA Rural Development in Boise by Kent Erickson, P.E., and at the Idaho Department of Environmental Quality in Coeur d'Alene by Gary Gaffney, P.E.

Proposed Water Quality Limits:

Proposed Water Quality Limits have been reviewed by Scott Fields, Water Quality Program Manager of the Coeur d'Alene Tribe. The proposed limits are shown in the table below: