POOR LEGIBILITY

ONE OR MORE PAGES IN THIS DOCUMENT ARE DIFFICULT TO READ DUE TO THE QUALITY OF THE ORIGINAL

Well 14.

SFUND RECORDS CTR
2386420

Motor :U S.250 H.P.
440 V. 1800 R.P.M.

Pump : Layne & Bowler 16 E H M 3 Stage.
Casing 16"
Column: 20-10"x10 Ft.=200 Ft.
Column:4 - 10"x20 Ft.=80 Ft.
Shafts : 20 - 1-15/16" x10 Ft.=200 Ft.
Shafts:4 - 1-15/16" x20 Ft.=80 Ft.
Oil Tube :3"x1-15/16 =280 Ft.

Depth to top of Bowls :280 Ft.
Depth to Bottom of Bowls :285 Ft.

Suction :10"x20 Ft.
Total Depth to Intake :305 Ft.

Air-Line : 280 Ft.-5/16" copper.
Banded at top.

(14)

ROSCOE MOSS COMPANY

4360 WORTH STREET
LOS ANGELES, CAL.

WELL CONTRACTORS — RENTAL TOOLS

Log of Well No. 1 Drilled for Las Vegas Valley Water District.

Of Las Vegas, Nevada.

Exact Location NE-1/4 NE-1/4 Sec 31, Twp 20-S, R-61-E, Clark County, Nevada.

Started Work January 1, 1961

Completed Work February 28, 1961

Total depth 1014

Size of shoe

106	ft. of	20	inch	5/16	Conductor	and
1014	" "	16	"	8	lb. or gauge casing used	and

left in Well

Type of Perforator used Moss Hydraulic

Perforated	510	ft. to	850	ft.	8	Holes per	4 inches
"	880	" "	910	"	8	" "	4 "
"	995	" "	1002	"	8	" "	4 "

Make diagram of perforation in square, showing dimensions.

Diameter of Perforations 5/16 inches

Length of Perforations 2 "

Depth at which water was first found 25 ft.

Standing level before perforating 26 "

Standing level after perforating "

Note below your observation of any change in water level while drilling

Water level when first started Test 30 ft.

Draw down from standing level 23.5 "

No. of gallons per minute pumped when Test first started 1500

No. of gallons per minute pumped when Test completed 4075

Draw down at completion of Test 150 ft.

Hours Testing Well 77

Formation: Mention size of water gravel—

0 ft. to 2 ft. Soil

2 " 7 " Rock caliche

2	[illegible]	Rock caliche
7	[illegible]	Tight sand or soft sandstone
16	26	Hard limestone or caliche
26	40	Caliche and clay
40	48	Clay and caliche gray
48	60	Clay and caliche pink
60	63	Hard caliche and limestone
63	100	Caliche and clay, little brown
100	115	Hard caliche
115	158	Caliche and clay brown
158	164	Hard limestone
164	211	Caliche and clay brown
211	215	Cemented gravel
215	245	Clay and little gravel brown
245	258	Red clay and caliche, little gravel
258	265	Cemented sand and gravel 2"
265	280	Tight sand and gravel 2"
280	306	Tight sand and gravel little clay
306	318	Loose gravel and boulders 4"
318	345	Tight gravel, little clay 2"
345	378	Sand and gravel 5"
378	396	Hard cemented clay and gravel 2"
396	415	Clay and little gravel 1/2"
415	436	Hard clay, red
436	450	Hard cemented clay and gravel 1"
450	459	Hard rock and clay
459	500	Hard red clay
500	505	Hard cemented clay and gravel 1/2"
505	538	Clay and gravel 2"
538	550	Cemented clay and gravel
[illegible]	[illegible]	Gravel and boulders 4"
[illegible]	[illegible]	Hard cemented gravel, boulders 8"
[illegible]	[illegible]	Cemented clay and gravel boulders 6"
[illegible]	656	Gravel and boulders 8"
656	695	Hard cemented gravel and boulders 6"
695	735	Hard cemented clay and gravel 6"
735	755	Cemented sand, clay and gravel 4"
755	790	Hard cemented clay and gravel 6"
790	841	Cemented gravel and boulders 8"
841	850	Gravel and boulders 4"
850	877	Cemented clay and gravel 6"
877	910	Cemented sand and gravel
910	925	Cemented clay and gravel
925	1000	Brown clay, little gravel and caliche
1000	1012	Sand and gravel 3"
1012	1014	Red clay, little gravel

ducing strings of casing were cut off, state how

Depth from surface cut ..... ft.

Size of casing cut ..... in.

Lap in larger casing ..... ft.

Was adapter or cement used? .....

If casing was swedged or repaired, state depth, describe repairs and condition in which casing was left and probable future effect:

Make drawing of adapter in square, showing dimensions.

Is well straight, top to bottom? Yes.

If not, what is the variation? .....

Will there be any detrimental effect on pump? no

If so, what effect? .....

No. of tons of gravel installed in well 56

Give any additional data which may be of future value Used 3 yards of cement between conductor and 16 inch casing. Cemented from top down to 100 feet. Cement plug in bottom. 10 sacks of cement.

Driller must fill in report as work progresses and report must be complete for his successor.

Date of report February 28, 1961

J. A. Cunningham.
Driller

Type and Rig No. used Cable Tool #40.

RM-11

Verti-Line DEEP WELL PUMP

ENCLOSED LINESHAFT CONSTRUCTION

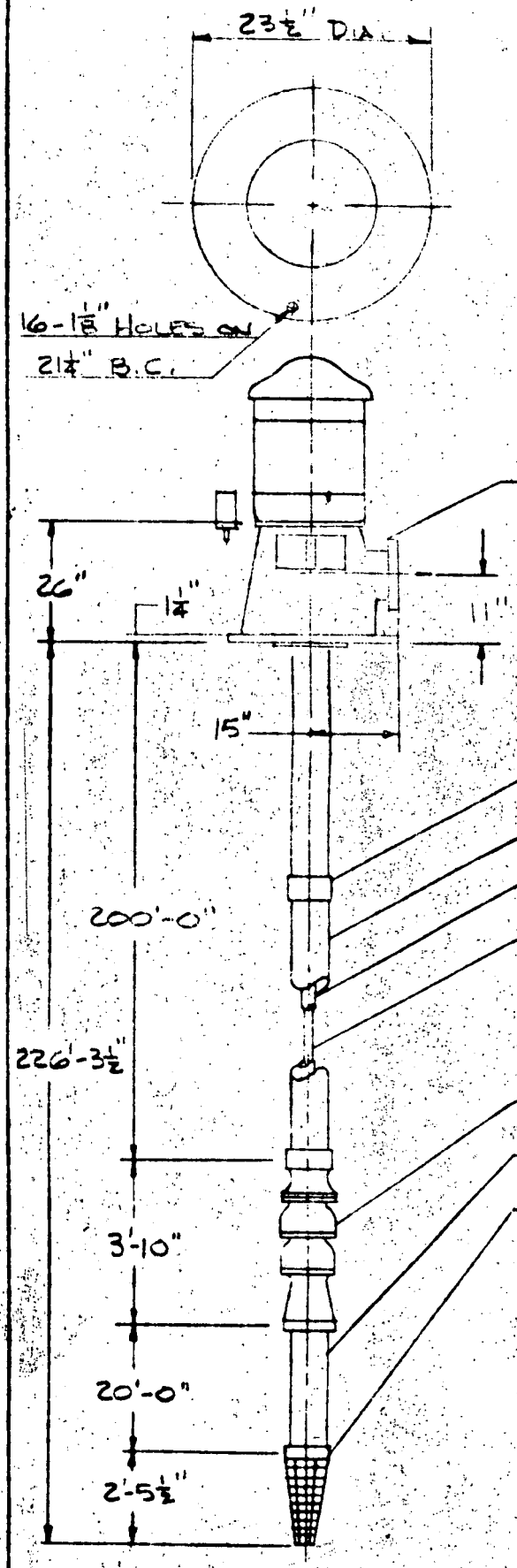

20810 DISCHARGE HEAD

150 HP V.H.S. ELECTRIC MOTOR

1770 RPM 60 CYCLE 3 PHASE 440 V

3 STAGE 16EHM Ser. 28767 BOWLS

2500 GPM. 165 FT. PER CURVE 61425

DISCHARGE FLANGE 10" 125 LB. A.S.A.

Motor: U.S. 150 h.p., 440 V, Type CFU, Frame 587
60 ~, 1800 r.p.m., 180A, Upper bearing 2-7226 GM,
Lower bearing 1-6620 J, Code F, Design B
Ser. 1246833

PIPE COUPLING O.D. 11¾"

10" COLUMN PIPE IN 10'-0" LGTHS

3" ENCLOSING TUBE IN 5'-0" LGTHS

1 15/16" LINESHAFT IN 10'-0" LGTHS

TOTAL OVERALL COLUMN LGTH 280'-0"

MAX O.D. BOWL ASSEMBLY 15½"

10" SUCTION PIPE IN 10'-0" LGTHS

10" CONICAL STRAINER

L-41-56-BL

LAYNE & BOWLER PUMP CO.

PROPOSAL FOR LAS VEGAS VALLEY WATER DISTRICT WELL #16

SPEC. ITEM

CERTIFIED

BY RM 4-27-61 L & B NO. 61425

FORM HA3HZ A

LVVWD #14

38#

NEVADA STATE HEALTH DIVISION
FOOD AND DRUG LABORATORY
790 Sutro Street — Reno
625 Shadow Lane — Las Vegas

NE1/4 NE1/4

COUNTY Clark
T. 20 R. 61 Sec. 31
Area Main Well Field

WATER ANALYSIS REPORT

Laboratory No. 1410
Submitted by L. J. Foote
Source Well
Temperature
Reason for analysis Water Resources Study
Use Las Vegas Valley Water Dept. Well #14
Owner
Submit report to L. J. Foote - DHD
Street 625 Shadow Lane
City Las Vegas, Nev 89106
Special requests

Date sample taken 12/23/68
Date sample received
If well: Depth 1014
Cased 1014
Diam 16"
Construction method
How many served

LOCATION:
Street or Other: 1/2 Mi. So. of Fremont
City or Other: Las Vegas, Nevada

RESULT OF TESTING

Color	0	
Turbidity	0	
Sediment	20	
pH value	7.70	
Total dissolved solids	235.0	ppm
Alkalinity	208.0	ppm
Bicarbonate	254.0	ppm
Carbonate	0	ppm
Total iron	0.04	ppm
Total hardness ($CaCo_3$)	240.0	ppm
Calcium	52.8	ppm
Magnesium	26.27	ppm
Sulfate	62.4	ppm
Chloride	8.0	ppm
Nitrate	Trace	ppm
Sodium and Potassium	20.33	ppm
		ppm
		ppm
		ppm
		ppm

Chemist Cornelius J. Pelaccio

1. ☒ Analysis of this sample indicates its chemical quality is within limits recommended by the State Health Division Water Supply Regulations.
2. ☐ Analysis of this sample indicates the following exceed the amounts recommended by the State Health Division Water Supply Regulations:

Comments:

NOTE—You are advised to submit a sample for bacterial testing if you have not already done so.

4209 (Rev. 1-68)