AQUATERRA
ENVIRONMENTAL SOLUTIONS, INC.

December 9, 2010

Mr. Ray Pilapil
Illinois Environmental Protection Agency
Bureau of Air, Compliance Section #40
1021 North Grand Avenue East
Springfield, Illinois 62702

Re: Annual Compliance Test Report
Flare Performance Testing
Cottonwood Hills Recycling and Disposal Facility

Dear Mr. Pilapil:

Aquaterra Environmental Solutions, Inc. (Aquaterra) on behalf of our client, Waste Management, Inc., has enclosed two copies of the *Annual Compliance Test Report, Heating Value, Velocity, Sulfur Compounds and Visible Emissions of an Open Flare, Cottonwood Hills Recycling and Disposal Facility, Marissa, Illinois* dated December 2010. Please feel free to contact us at (618) 628-2001 with any questions or comments regarding this report.

Sincerely,
Aquaterra Environmental Solutions, Inc.

Andy Limmer, P.G.
Senior Project Manager

Thomas K. Jacobsmeyer, P.E.
Senior Project Manager

Cc: Ernest Dennison, P.E. - Waste Management of Illinois, Inc.
Kevin Mattison – IEPA Bureau of Air, Des Plaines Office
John Justice – IEPA Bureau of Air, Collinsville Office

ANNUAL COMPLIANCE TEST REPORT
HEATING VALUE, VELOCITY, SULFUR COMPOUNDS AND VISIBLE EMISSIONS OF AN OPEN FLARE
COTTONWOOD HILLS RECYCLING AND DISPOSAL FACILITY
MARISSA, ILLINOIS

Aquaterra Project Number 4121.10
December 2010

Prepared For:

Waste Management of Illinois, Inc.
601 Madison Avenue
East St. Louis, Illinois 62201

AQUATERRA

ANNUAL COMPLIANCE TEST REPORT
HEATING VALUE, VELOCITY, SULFUR COMPOUNDS AND
VISIBLE EMISSIONS OF AN OPEN FLARE
COTTONWOOD HILLS RECYCLING AND DISPOSAL FACILITY
MARISSA, ILLINOIS
DECEMBER 2010

REPORT INDEX

Part No.	Part Title	Number of Pages
1.0	Introduction	1
2.0	Process Overview	1
3.0	Test Methodologies and Results	4

WM00426

TABLE OF CONTENTS

Page No.

REPORT INDEX ii

1.0 INTRODUCTION 1

2.0 PROCESS OVERVIEW 2

3.0 TEST METHODOLOGIES AND RESULTS 3

3.1 Visible Emissions 4

3.2 Fuel Heating Value 4

3.3 Cottonwood Hills RDF Flare Velocity Determination 5

3.4 Total Sulfur Compounds 6

LIST OF APPENDICES

Appendix A

Open Flare Diagram

Appendix B

Field Logs

Appendix C

Laboratory Analytical Results

Appendix D

Calculations

Net Heating Value

Actual Exit Velocity

Maximum Permitted Exit Velocity

Sulfur Compound Concentrations

WM00427

ANNUAL COMPLIANCE TEST REPORT
HEATING VALUE, VELOCITY, SULFUR COMPOUNDS AND VISIBLE EMISSIONS OF AN OPEN FLARE
COTTONWOOD HILLS RECYCLING AND DISPOSAL FACILITY
MARISSA, ILLINOIS
DECEMBER 2010

1.0 INTRODUCTION

Aquaterra Environmental Solutions, Inc. (Aquaterra) was retained by Waste Management of Illinois, Inc., to perform the 2010 annual performance testing of the open flare at the Cottonwood Hills Recycling and Disposal Facility (Cottonwood Hills RDF) located in Marissa, Illinois. The flare testing was performed in accordance with the site permits, requirements of the Illinois Environmental Protection Agency (IEPA), 40 CFR 60.18 and the New Source Performance Standards found in 40 CFR Part 60, Subpart WWW. Tom Jacobsmeyer and Mike McElvain of Aquaterra performed the Cottonwood Hills RDF flare testing on June 24, 2010 and October 28, 2010.

WM00428

2.0 PROCESS OVERVIEW

The Cottonwood Hills RDF landfill gas collection and control system is routed to a landfill gas open flare. The open flare is used for the destruction of landfill gas and the control of landfill gas emissions. The flare began operation on February 5, 2008. The flare inlet pipe is 12 inches in diameter and composed of high density polyethylene (SDR-17) piping. The flare exit pipe is 10 inches in diameter. The flare was continually operated with a flame present at all times during the test period. A diagram of the Cottonwood Hills RDF flare system is provided in Appendix A.

WM00429

3.0 TEST METHODOLOGIES AND RESULTS

The Cottonwood Hills RDF flare sampling and testing were performed in accordance with the guidelines of the following USEPA test methods outlined in 40 CFR Part 60, Appendix A:

- Method 3C – Determination of Carbon Dioxide, Methane, Nitrogen and Oxygen from Stationary Sources,
- Method 2D – Measurement of Gas Volume Flow Rates in Small Pipes or Ducts, and Method 22 – Determination of Fugitive Emissions from Material Sources and Smoke Emissions from Flares.

Additional sampling and testing for Sulfur compounds were performed in accordance with the guidelines of ASTM D 5504-08.

Two test events were conducted on the open flare. The test events were completed in June and October of 2010. The visual test of the open flare emissions was conducted during the June 2010 test event. Six landfill gas samples were collected for laboratory analyses during each test event. Copies of the Cottonwood Hills RDF flare testing field logs are presented in Appendix B. Field testing information including sampling times and flare system performance data, such as volumetric flow rate, gas and flare temperatures, and gas pressure readings, are recorded on the field logs.

Samples Cottonwood 1, Cottonwood 2, and Cottonwood 3 were collected on June 24, 2010 and samples Cottonwood 4, Cottonwood 5, and Cottonwood 6 were collected on October 28, 2010. The landfill gas samples for Carbon Dioxide, Methane, Nitrogen and Oxygen were collected under vacuum at the Cottonwood Hills RDF flare inlet using evacuated stainless steel tanks (summa canisters). A calibrated flow control regulator was used to regulate the flow of landfill gas at the approximate flow rate of 100 milliliters per min into each evacuated summa canister. The landfill gas sample canisters were delivered to Test America Laboratories (Test America) in Santa Ana, California for laboratory analysis. Copies of the laboratory reports are presented in Appendix C.

Additional landfill gas samples Cottonwood 1, Cottonwood 2, and Cottonwood 3 were collected on June 24, 2010, and samples Cottonwood 4, Cottonwood 5, and Cottonwood 6 were collected on October 28, 2010. These landfill gas samples for Sulfur compounds were collected using 1.0 Liter Tedlar bags at the sample port at the Cottonwood Hills RDF flare inlet. The landfill gas samples were delivered to Columbia Analytical Services (Columbia) in Simi Valley, California for laboratory analysis. Copies of the laboratory reports are presented in Appendix C.

3.1 Visible Emissions

Visible emissions (opacity) testing of the Cottonwood Hills RDF flare was performed on June 24, 2010, in accordance with USEPA Method 22, *Determination of Fugitive Emissions from Material Sources and Smoke Emissions from Flares.* The visual emissions from the open flare were continuously monitored for a 2-hour timeframe and documented at 5-minute intervals. A 5-minute rest period occurred after each 20-minute observation period. The Method 22 test results for the Cottonwood Hills RDF flare are summarized on the Method 22 Testing Field Log presented in Appendix B. The results of the visible emissions test indicated no detectable visible emissions from the Cottonwood Hills RDF flare, as such, the flare performed within the maximum permitted emission limit. A summary of the acceptable Cottonwood Hills RDF flare visible emissions testing results is presented as follows.

Cottonwood Hills RDF Flare Visible Emission Summary

Actual Visible Emission Event per 2 hours	Allowable Visible Emission Event per 2 hours
0 seconds	5 minutes

3.2 Fuel Heating Value

A total of six samples of the landfill gas were analyzed for net heating value by ASTM Method D3588 and fixed gases per EPA Method 3C. The results of the laboratory analyses are provided in Appendix C. The laboratory heating value analysis indicated that the net heating value of the landfill gas at the time of sample collection was in compliance with the minimum requirements as described in 40 CFR 60.18(c)(3)(ii).

The net heating value of the landfill gas during the test events was also calculated based on the concentration of methane in the landfill gas, in accordance with 40 CFR 60.18(f)(3) and 40 CFR 60.754(e). Per 40 CFR 60.754(e), the net heating value of combusted landfill gas is calculated from the concentration of methane in the landfill gas as measured by EPA Method 3C. The measurement of other organic components, hydrogen, and carbon monoxide is not applicable. The results of the net heating value calculation comply with the requirements of 40 CFR 60.18(c)(3)(ii) and not surprisingly are slightly less than the laboratory measured values. This is due to the fact that the calculation considers the heating value of only the methane portion of the landfill gas, while the laboratory analysis measures the heating value of all components of landfill gas contributing to the net heating value, including methane, carbon monoxide and other organic components. Detailed calculations are provided in Appendix D. A summary of the laboratory results, calculated heating values and allowable heating value for the Cottonwood Hills RDF flare is presented in the following table.

Cottonwood Hills RDF Flare Fuel Heating Value Summary

Date	Run No.	Laboratory Analytical Heating Value (MJ/scm)	Calculated Heating Value (MJ/scm)	Minimum Allowable Heating Value (MJ/scm)
6/24/10	Cottonwood 1	19.0	16.7	7.45
6/24/10	Cottonwood 2	19.4	17.0	7.45
6/24/10	Cottonwood 3	19.7	17.3	7.45
10/28/10	Cottonwood 4	19.4	17.3	7.45
10/28/10	Cottonwood 5	19.4	17.0	7.45
10/28/10	Cottonwood 6	19.7	17.3	7.45

3.3 Cottonwood Hills RDF Flare Velocity Determination

The actual exit velocity of the flare was determined by dividing the volumetric flow rate by the unobstructed cross sectional area of the flare tip in accordance with 40 CFR 60.18(f)(4). The volumetric flow rate, in standard cubic feet per minute, was recorded from the Fluid Component International ST98 Mass Flow Meter installed in the 12-inch nominal diameter pipe between the blower and the open flare. The flow meter measures the mass flow rate of the gas using the thermal dispersion operating principle. The meter operates using a constant temperature system that employs two resistance temperature detector sensors (RTDs): one for sensing temperature and one for sensing flow. One of the RTDs is heated to a precise temperature above that of the gas passing by. The gas flow cools the sensor resulting in a proportional change in the temperature between the two RTDs, which is used to calculate the mass flow rate. With the direct measurement of the mass flow rate, versus volumetric flow rate, corrections for temperature and pressure are not needed. Detailed calculations of the actual exit velocity are provided in Appendix D.

The Cottonwood Hills RDF flare maximum permitted exit velocity was calculated utilizing the equation found at 40 CFR 60.18(f)(5). The corresponding velocity calculation is presented in Appendix D. The actual calculated exit velocities were determined to be less than the maximum permitted exit velocities. A summary of the actual and maximum permitted velocities for the Cottonwood Hills RDF flare test events is presented in the following table.

Cottonwood Hills RDF Flare Exit Velocity Summary

Date	Run No.	Actual Calculated Exit Velocity (m/s)	Maximum Permitted Velocity (m/s)
6/24/10	Cottonwood 1	5.6	27.2
6/24/10	Cottonwood 2	5.6	27.8
6/24/10	Cottonwood 3	5.6	28.5
10/28/10	Cottonwood 4	5.7	28.5
10/28/10	Cottonwood 5	5.7	27.8
10/28/10	Cottonwood 6	5.6	28.5

3.4 Total Sulfur Compounds

A total of six samples of the landfill gas were analyzed for twenty Sulfur compounds, including Hydrogen Sulfide, by ASTM Method D 5044-08. The results of the laboratory analyses are provided in Appendix C. Hydrogen Sulfide sampling is required per IEPA-BOA Permit No. 06100058, condition 6.a.i, issued January 10, 2007. The average sulfur content for the two events in June and October, 2010, were 27.2 ppmV and 39.4 ppmV respectively. A summary of the Sulfur compounds tested for, and their concentrations, is included in Appendix D.

WM00433

APPENDIX A

OPEN FLARE DIAGRAM

AQUATERRA
ENVIRONMENTAL SOLUTIONS, INC.

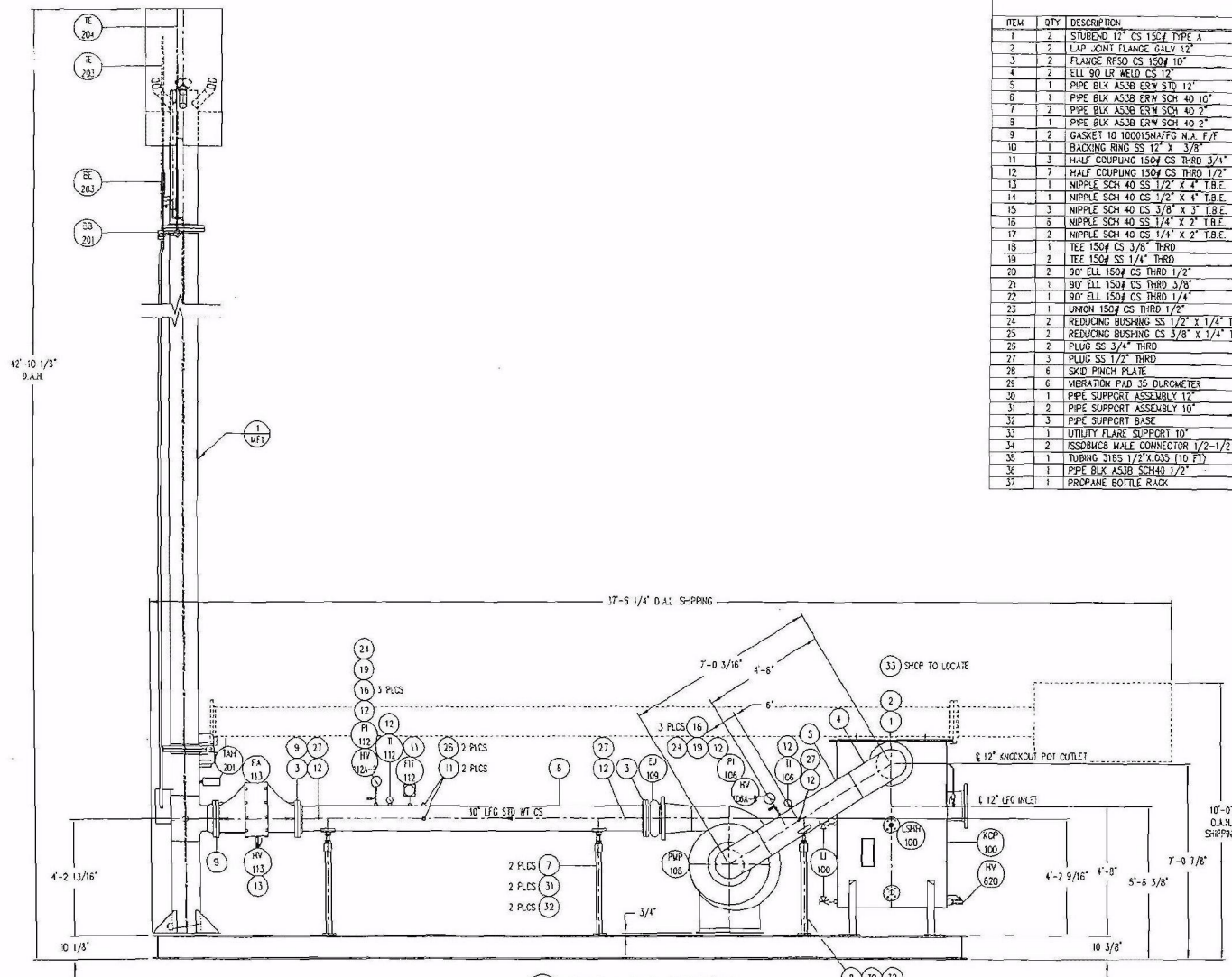

1 / M1 PLAN - SKID ASSEMBLY

BILL OF MATERIAL

ITEM	QTY	DESCRIPTION	SUPPLIER	PART NO.	INVENTORY AMOUNT
1	2	STUBEND 12" CS 150# TYPE A	LFG	WFE12B40	
2	2	LAP JOINT FLANGE GALV 12"	LFG	WFLJ12GALV	
3	2	FLANGE RFSO CS 150# 10"	LFG	WFF10B3	
4	2	ELL 90 LR WELD CS 12"	LFG	WFL120CB4	
5	1	PIPE BLK A53B ERW STD 12"	LFG	PW12BSTD	4
6	1	PIPE BLK A53B ERW SCH 40 10"	LFG	PW10B40	12.8
7	2	PIPE BLK A53B ERW SCH 40 2"	LFG	PW2B40	3.3
8	1	PIPE BLK A53B ERW SCH 40 2"	LFG	PW2B40	3.2
9	2	GASKET 10 100015NAFFG N.A. F/F	LFG	WFG10NA	
10	1	BACKING RING SS 12" X 3/8"	LFG	VF.BR1238S	
11	3	HALF COUPLING 150# CS THRD 3/4"	LFG	FLOOR STOCK	
12	7	HALF COUPLING 150# CS THRD 1/2"	LFG	FLOOR STOCK	
13	1	NIPPLE SCH 40 SS 1/2" X 4" T.B.E.	LFG	FLOOR STOCK	
14	1	NIPPLE SCH 40 CS 1/2" X 4" T.B.E.	LFG	FLOOR STOCK	
15	3	NIPPLE SCH 40 CS 3/8" X 3" T.B.E.	LFG	FLOOR STOCK	
16	6	NIPPLE SCH 40 SS 1/4" X 2" T.B.E.	LFG	FLOOR STOCK	
17	2	NIPPLE SCH 40 CS 1/4" X 2" T.B.E.	LFG	FLOOR STOCK	
18	1	TEE 150# CS 3/8" THRD	LFG	FLOOR STOCK	
19	2	TEE 150# SS 1/4" THRD	LFG	FLOOR STOCK	
20	2	90° ELL 150# CS THRD 1/2"	LFG	FLOOR STOCK	
21	1	90° ELL 150# CS THRD 3/8"	LFG	FLOOR STOCK	
22	1	90° ELL 150# CS THRD 1/4"	LFG	FLOOR STOCK	
23	1	UNION 150# CS THRD 1/2"	LFG	FLOOR STOCK	
24	2	REDUCING BUSHING SS 1/2" X 1/4" THRD	LFG	FLOOR STOCK	
25	2	REDUCING BUSHING CS 3/8" X 1/4" THRD	LFG	FLOOR STOCK	
26	2	PLUG SS 3/4" THRD	LFG	FLOOR STOCK	
27	3	PLUG SS 1/2" THRD	LFG	FLOOR STOCK	
28	6	SKID PINCH PLATE	LFG	PINCHPLATE	
29	6	VIBRATION PAD 35 DUROMETER	LFG	VP35DUROMETER	
30	1	PIPE SUPPORT ASSEMBLY 12"	LFG	PIPESUPPORT12	
31	2	PIPE SUPPORT ASSEMBLY 10"	LFG	PIPESUPPORT10	
32	3	PIPE SUPPORT BASE	LFG	PIPESUPPORTBASE	
33	1	UTILITY FLARE SUPPORT 10"	LFG	LFGSD0075D	
34	2	ISSOBMC8 MALE CONNECTOR 1/2-1/2	LFG	PFK1212MC	
35	1	TUBING 316S 1/2"X.035 (10 FT)	LFG	PT12X35S	
36	1	PIPE BLK A53B SCH40 1/2"	LFG	PW012B40	10
37	1	PROPANE BOTTLE RACK	LFG	PRORACK	

NOTES:

1. ALL BOLTS, CAP SCREWS AND NUTS WILL BE SAE GRADE 8 WITH YELLOW ZINC DICHROMATE PLATING. THREADED RODS WILL BE STAINLESS STEEL. ALL THREADS WILL BE UNIFIED NATIONAL COARSE.
2. ALL 1/8"-1 1/2" PIPES WILL BE STANDARD BLACK PIPE ASTM A53 OR ASTM A106. ALL 1/8"-1 1/2" PIPE NIPPLES WILL BE STANDARD BLACK PIPE ASTM A733
3. ALL 1/8"-1 1/2" PIPE FITTINGS (ELBOWS, TEES, BUSHINGS, ETC.) WILL BE STANDARD (CLASS 150) WITH A BLACK FINISH - UNLESS OTHERWISE SPECIFIED.
4. EXTERNAL PIPE SURFACES TO BE BLASTED TO SP-7 SPECIFICATIONS, APPLIES TO CARBON STEEL PIPING ONLY.
5. ALL CARBON STEEL VESSELS AND PIPE EXTERNALS TO BE COATED WITH RUST PROHIBITING SHERWIN WILLIAMS B67R5 RED OXIDE RECOATABLE PRIMER AND FINISHED WITH A 3 MIL COAT OF SLATE GREY COLORED INDUSTRIAL ACRYLIC POLYURETHANE, SHERWIN WILLIAMS ACROLON 218 HS.
6. INSTALL GAUGES TO FACE CONTROL RACK SIDE.
7. ALL PIPE BUTT WELD JOINTS WILL HAVE A 1/8" ROOT OPENING.

Shaw® LFG Specialties, L.L.C.

REV	DESCRIPTION / ISSUE	DATE	BY
0	ISSUED FOR PURCHASING	06/28/07	BKO

THIS DRAWING REPRESENTS INTELLECTUAL PROPERTY OF LFG SPECIALTIES, L.L.C. ANY MODIFICATION TO THE ORIGINAL BY OTHER THAN LFG SPECIALTIES, L.L.C. PERSONNEL VIOLATES ITS ORIGINAL PURPOSE AND AS SUCH IS RENDERED VOID. LFG SPECIALTIES, L.L.C. WILL NOT BE HELD LIABLE FOR ANY CHANGES MADE TO THIS DOCUMENT WITHOUT THE EXPRESS WRITTEN CONSENT OF THE ORIGINATOR.

UTILITY FLARE SKID ASSEMBLY

DRAWN BY	CHECKED BY	APPROVED BY	SIZE
BKO	LZ	LZ	D
SCALE 1/2" = 1'-0"	DATE 06/22/07	PROJECT NO. 127337	

PROJECT NAME: LANDFILL GAS UTILITY FLARE #CF124210
COTTONWOOD HILLS LANDFILL
MARISSA, IL

CUSTOMER: WASTE MANAGEMENT

DRAWING NO.	SHEET NO.	REV.
2093	M1	1

File: F:\LFS\2000 JOB\MCS\2093\MECHANICAL\2093-M1-SHT2.dwg Layout: Model User: cmeiling Aug 15, 2007 - 2:21pm

WM00435

SYSTEM TO BE ORIENTED WITH THE FLARE CONTROL PANEL FACING NORTH

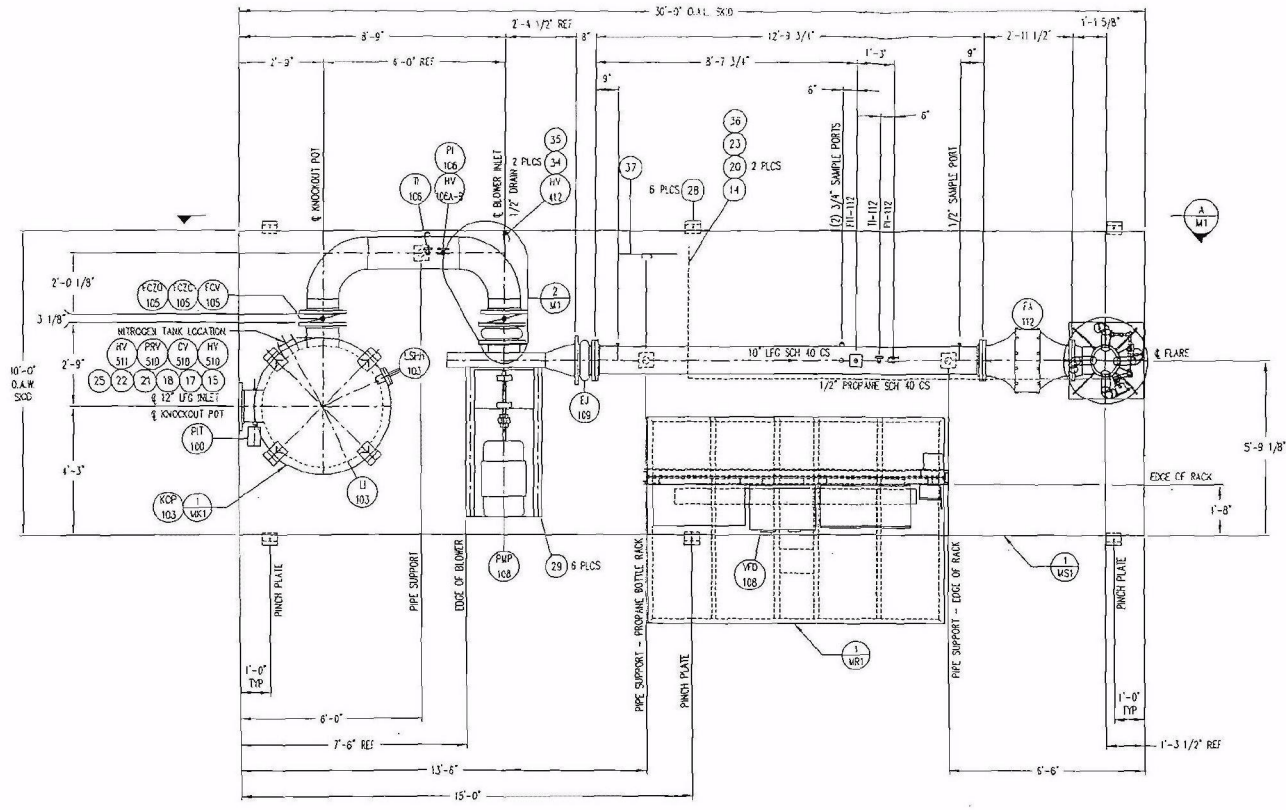

1 / M1 PLAN - SKID ASSEMBLY

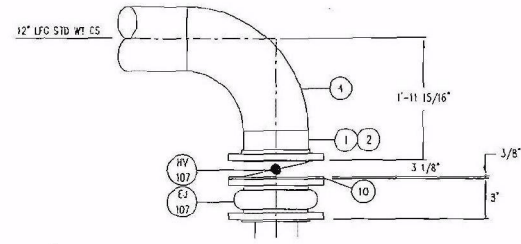

2 / M1 DETAIL - BLOWER INLET
SCALE: 2X

FOR B.O.M. SEE DRAWING 2093-M1-SHT2

NOTES:

1. ALL BOLTS, CAP SCREWS AND NUTS WILL BE SAE GRADE 8 WITH YELLOW ZINC DICHROMATE PLATING. THREADED RODS WILL BE STAINLESS STEEL. ALL THREADS WILL BE UNIFIED NATIONAL COARSE.
2. ALL 1/8"-1 1/2" PIPES WILL BE STANDARD BLACK PIPE ASTM A53 OR ASTM A106. ALL 1/8"-1 1/2" PIPE NIPPLES WILL BE STANDARD BLACK PIPE ASTM A733.
3. ALL 1/8"-1 1/2" PIPE FITTINGS (ELBOWS, TEES, BUSHINGS, ETC.) WILL BE STANDARD (CLASS 150) WITH A BLACK FINISH - UNLESS OTHERWISE SPECIFIED.
4. EXTERNAL PIPE SURFACES TO BE BLASTED TO SP-7 SPECIFICATIONS, APPLIES TO CARBON STEEL PIPING ONLY.
5. ALL CARBON STEEL VESSELS AND PIPE EXTERNALS TO BE COATED WITH RUST PROHIBITING SHERWIN WILLIAMS B67RS RED OXIDE RECOATABLE PRIMER AND FINISHED WITH A 3 MIL COAT OF SLATE GREY COLORED INDUSTRIAL ACRYLIC POLYURETHANE, SHERWIN WILLIAMS ACROLON 218 HS.
6. INSTALL GAUGES TO FACE CONTROL RACK SIDE.
7. ALL PIPE BUTT WELD JOINTS WILL HAVE A 1/8" ROOT OPENING.
8. A MINIMUM DISTANCE FROM POWER LINES AND STRUCTURES OF 4 TIMES THE STACK HEIGHT MUST BE MAINTAINED AROUND THE FLARE. IF THIS DISTANCE IS NOT FEASIBLE, PLEASE CONTACT LFG SPECIALTIES ENGINEERING.

Shaw® LFG Specialties, L.L.C.

REV	DESCRIPTION / ISSUE	DATE	BY
0	ISSUED FOR PURCHASING	06/28/07	BKD

THIS DRAWING REPRESENTS INTELLECTUAL PROPERTY OF LFG SPECIALTIES, L.L.C. ANY MODIFICATION TO THE ORIGINAL BY OTHER THAN LFG SPECIALTIES, L.L.C. PERSONNEL VIOLATES ITS ORIGINAL PURPOSE AND AS SUCH IS RENDERED VOID. LFG SPECIALTIES, L.L.C. WILL NOT BE HELD LIABLE FOR ANY CHANGES MADE TO THIS DOCUMENT WITHOUT THE EXPRESS WRITTEN CONSENT OF THE ORIGINATOR.

UTILITY FLARE SKID ASSEMBLY

DRAWN BY	CHECKED	APPROVED BY	SIZE
BKD	LZ	LZ	D
SCALE 1/2" = 1'-0"	DATE 06/22/07	PROJECT NO. 127337	

PROJECT NAME: LANDFILL GAS UTILITY FLARE #CF124210
COTTONWOOD HILLS LANDFILL
MARISSA, IL

CUSTOMER: WASTE MANAGEMENT

DRAWING NO.	DWG NO.	REV
2093	M1	1

File: P:\2005 DRAWINGS\2093\M1\2093-M1-SHT1.dwg Layout: Model User: mrhilling Aug 15, 2007 - 2:32pm

WM00436

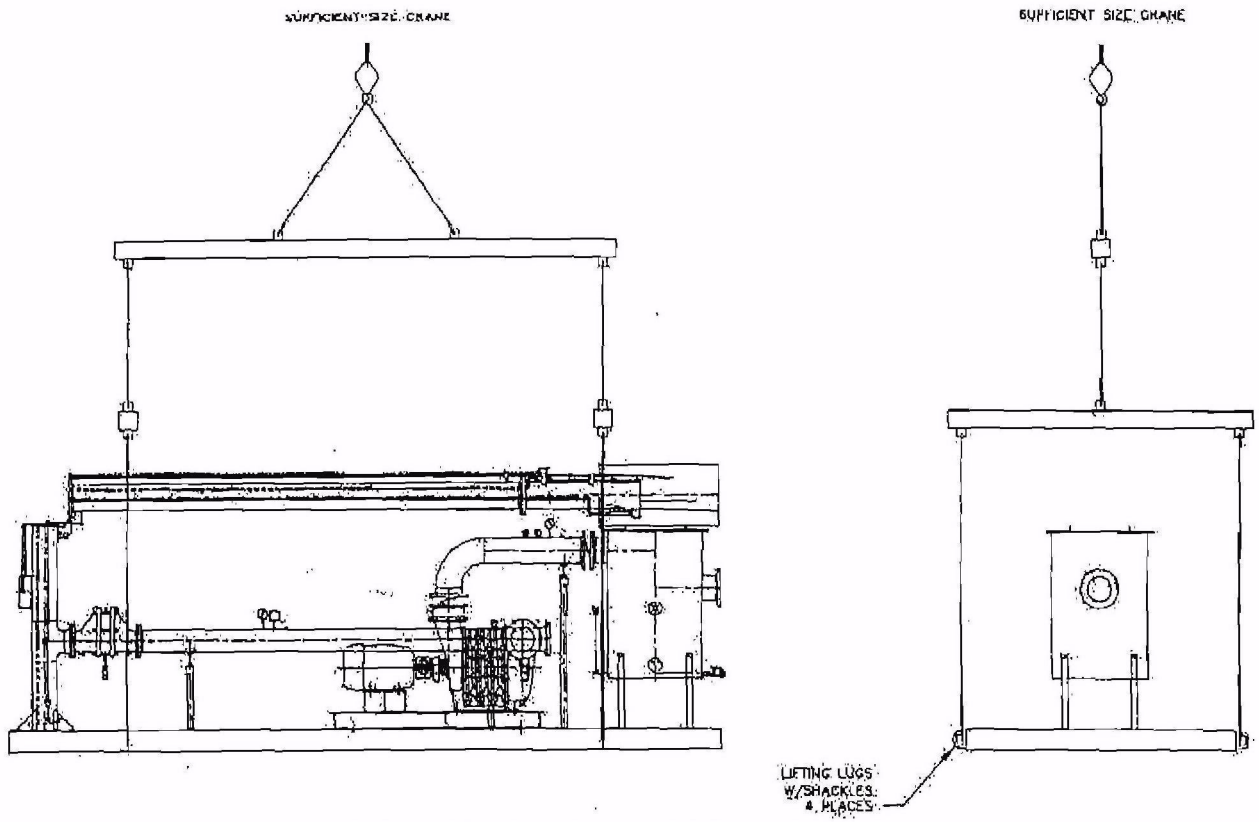

Maximum Skid Weights

Length	16 ft	20 ft	26 ft	30 ft	32 ft	36 ft	38 ft	40 ft
Width								
8 ft	9,240 lbs	11,271 lbs	15,890 lbs	20,050 lbs	25,480 lbs	31,490 lbs	30,920 lbs	42,100 lbs
9 ft	9,770 lbs	11,921 lbs	16,720 lbs	21,000 lbs	26,490 lbs	32,620 lbs	36,610 lbs	43,350 lbs
10 ft	10,300 lbs	12,571 lbs	17,560 lbs	21,950 lbs	27,500 lbs	33,750 lbs	37,600 lbs	44,600 lbs

RECOMMENDED RIGGING FOR SKID

Shaw LFG Specialties, L.L.C.

XREF Files: IMAGE Files:
File: N:\LFG Time Charges 2004\SKIDDWG.dwg Layout: Model User: tom.sengro Dec 03, 2004 - 4:22pm

APPENDIX B

FIELD LOGS

AQUATERRA
ENVIRONMENTAL SOLUTIONS, INC.

AQUATERRA ENVIRONMENTAL SOLUTIONS, INC.
LANDFILL GAS FLARE TESTING LOG

Waste Management, Inc.
Cottonwood Hills Recycling and Disposal Facility
Marissa, Illinois

Sampler: Tom Jacobsmeyer

Date: 6/24/2010
Sample I.D.: Cottonwood 1
Vessel I.D.: 4343
Vessel Vol.: 6.0 liter

Temperature Measurements

Flare Temp.* 832 Deg. F
Gas Temp.** 126 Deg. F

* Measured with CAT 123-6700 Infrared Thermometer II with Laser Sighting
** Measured with in-line thermometer

Pressure Measurement

Static Pressure* 2.00 Inches H_2O

* Measured with Shortridge Instruments, Inc. Airdata Multimeter ADM 860 #M00577

Flow Rate Record

Time 12:57
Flow Rate* 608 SCFM

*Recorded from continuous flowmeter

Summa Canister Vacuum Readings

Initial Vacuum -30 Inches Hg
Final Vacuum -1 Inches Hg

The flow regulator was calibrated at 100 cc/min and the canister was allowed to fill for 45 min.

Start Time 12:58
End Time 13:49

AQUATERRA ENVIRONMENTAL SOLUTIONS, INC.
LANDFILL GAS FLARE TESTING LOG

Waste Management, Inc.
Cottonwood Hills Recycling and Disposal Facility
Marissa, Illinois

Sampler: Tom Jacobsmeyer

Date: 6/24/2010
Sample I.D.: Cottonwood 2
Vessel I.D.: 4438
Vessel Vol.: 6.0 liter

Temperature Measurements

Flare Temp.* 1012 Deg. F
Gas Temp.** 127 Deg. F

* Measured with CAT 123-6700 Infrared Thermometer II with Laser Sighting
** Measured with in-line thermometer

Pressure Measurement

Static Pressure* 2.00 Inches H_20

* Measured with Shortridge Instruments, Inc. Airdata Multimeter ADM 860 #M00577

Flow Rate Record

Time 13:54
Flow Rate* 608 SCFM

*Recorded from continuous flowmeter

Summa Canister Vacuum Readings

Initial Vacuum -30 Inches Hg
Final Vacuum -1 Inches Hg

The flow regulator was calibrated at 100 cc/min and the canister was allowed to fill for 50 min.

Start Time 13:56
End Time 14:50

AQUATERRA ENVIRONMENTAL SOLUTIONS, INC.
LANDFILL GAS FLARE TESTING LOG

Waste Management, Inc.
Cottonwood Hills Recycling and Disposal Facility
Marissa, Illinois

Sampler: Tom Jacobsmeyer

Date: 6/24/2010
Sample I.D.: Cottonwood 3
Vessel I.D.: 3279
Vessel Vol.: 6.0 liter

Temperature Measurements

Flare Temp.* 1050 Deg. F
Gas Temp.** 127 Deg. F

* Measured with CAT 123-6700 Infrared Thermometer II with Laser Sighting
** Measured with in-line thermometer

Pressure Measurement

Static Pressure* 2.00 Inches H_20

* Measured with Shortridge Instruments, Inc. Airdata Multimeter ADM 860 #M00577

Flow Rate Record

Time 14:56
Flow Rate* 612 SCFM

*Recorded from continuous flowmeter

Summa Canister Vacuum Readings

Initial Vacuum -30 Inches Hg
Final Vacuum -1 Inches Hg

The flow regulator was calibrated at 100 cc/min and the canister was allowed to fill for 50 min.

Start Time 14:55
End Time 15:51

AQUATERRA ENVIRONMENTAL SOLUTIONS, INC.

LANDFILL GAS FLARE TESTING LOG
VISIBLE EMISSIONS INSPECTION - METHOD 22

Cottonwood Hills Recycling and DisposalFacility
Marissa, Illinois

Tester Tom Jacobsmeyer Date 6/24/2010

Time (Hour:Min.)	Elapsed Time (Minutes)	Accumulate Emissions (Min.:Sec.)	Time (Hour:Min.)	Elapsed Time (Minutes)	Accumulate Emissions (Min.:Sec.)
13:00	0		14:15	60	
13;05	5	0:00	14:20	65	0:00
13:10	10	0:00	14:25	70	0:00
13:15	15	0:00	14:30	75	0:00
13:20	20	0:00	14:35	80	0:00
13:25	20		14:40	80	
13:30	25	0:00	14:45	85	0:00
13:35	30	0:00	14:50	90	0:00
13:40	35	0:00	14:55	95	0:00
13:45	40	0:00	15:00	100	0:00
13:50	40		15:05	100	
13:55	45	0:00	15:10	105	0:00
14:00	50	0:00	15:15	110	0:00
14:05	55	0:00	15:20	115	0:00
14:10	60	0:00	15:25	120	0:00
First Hour Subtotal:		0:0	Second Hour Subtotal:		0:00
Total Visible Emissions:				0:00	

Notes:

Sketch of Unit Processes

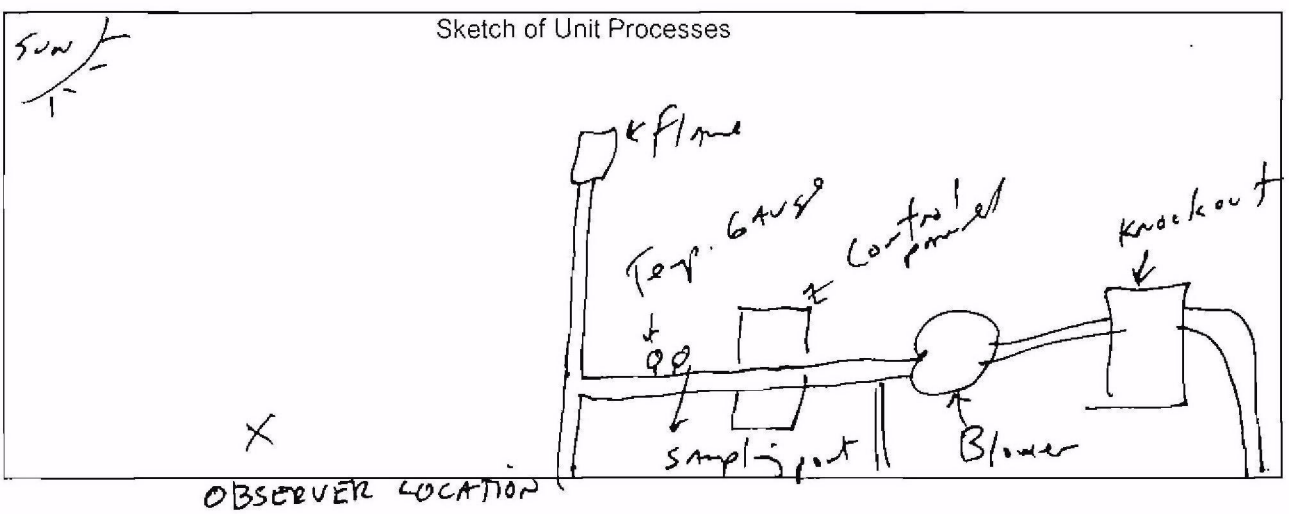

AQUATERRA ENVIRONMENTAL SOLUTIONS, INC.
LANDFILL GAS FLARE TESTING LOG

Waste Management, Inc.
Cottonwood Hills Recycling and Disposal Facility
Marissa, Illinois

Sampler: Tom Jacobsmeyer/Mike McElvain

Date	10/28/2010	
Sample I.D.	Cottonwood 4	
Vessel I.D.	11415	
Vessel Vol.	6.0	liter

Temperature Measurements

Flare Temp.*	1373	Deg. F
Gas Temp.**	110	Deg. F

* Measured with CAT 123-6700 Infrared Thermometer II with Laser Sighting
** Measured with in-line thermometer

Pressure Measurement

Static Pressure*	0	Inches H_2O

* Measured with Shortridge Instruments, Inc. Airdata Multimeter ADM 860 #M00577

Flow Rate Record

Time	13:50	
Flow Rate*	615	SCFM

*Recorded from continuous flowmeter

Summa Canister Vacuum Readings

Initial Vacuum	-30	Inches Hg
Final Vacuum	0	Inches Hg

The flow regulator was calibrated at 100 cc/min and the canister was allowed to fill for 50 min.

Start Time	13:45
End Time	14:35

AQUATERRA ENVIRONMENTAL SOLUTIONS, INC.
LANDFILL GAS FLARE TESTING LOG

Waste Management, Inc.
Cottonwood Hills Recycling and Disposal Facility
Marissa, Illinois

Sampler: Tom Jacobsmeyer/Mike McElvain

Date: 10/28/2010
Sample I.D.: Cottonwood 5
Vessel I.D.: DL0842
Vessel Vol.: 6.0 liter

Temperature Measurements

Flare Temp.*: 1330 Deg. F
Gas Temp.**: 110 Deg. F

* Measured with CAT 123-6700 Infrared Thermometer II with Laser Sighting
** Measured with in-line thermometer

Pressure Measurement

Static Pressure*: 0 Inches H_20

* Measured with Shortridge Instruments, Inc. Airdata Multimeter ADM 860 #M00577

Flow Rate Record

Time: 14:40
Flow Rate*: 615 SCFM

*Recorded from continuous flowmeter

Summa Canister Vacuum Readings

Initial Vacuum: -30 Inches Hg
Final Vacuum: 0 Inches Hg

The flow regulator was calibrated at 100 cc/min and the canister was allowed to fill for 50 min.

Start Time: 14:35
End Time: 15:25

AQUATERRA ENVIRONMENTAL SOLUTIONS, INC.
LANDFILL GAS FLARE TESTING LOG

Waste Management, Inc.
Cottonwood Hills Recycling and Disposal Facility
Marissa, Illinois

Sampler: Tom Jacobsmeyer/Mike McElvain

Date: 10/28/2010
Sample I.D.: Cottonwood 6
Vessel I.D.: DL106
Vessel Vol.: 6.0 liter

Temperature Measurements

Flare Temp.*: 1330 Deg. F
Gas Temp.**: 110 Deg. F

* Measured with CAT 123-6700 Infrared Thermometer II with Laser Sighting
** Measured with in-line thermometer

Pressure Measurement

Static Pressure*: 0 Inches H_20

* Measured with Shortridge Instruments, Inc. Airdata Multimeter ADM 860 #M00577

Flow Rate Record

Time: 16:25
Flow Rate*: 610 SCFM

*Recorded from continuous flowmeter

Summa Canister Vacuum Readings

Initial Vacuum: -30 Inches Hg
Final Vacuum: 0 Inches Hg

The flow regulator was calibrated at 100 cc/min and the canister was allowed to fill for 50 min.

Start Time: 15:25
End Time: 16:15

APPENDIX C

LABORATORY ANALYTICAL RESULTS

AQUATERRA
ENVIRONMENTAL SOLUTIONS, INC.

TestAmerica

THE LEADER IN ENVIRONMENTAL TESTING

3585 Cadillac Avenue, Suite A Costa Mesa, CA 92626 * 714-258-8610 * Fax 714-258-0921

July 20, 2010

LABORATORY REPORT

Client:
Aquaterra Environmental Solution Fairview Heights
13 Executive drive, Suite 1
Fairview Heights, IL 62208
Attn: Tom Jacobsmeyer

Work Order: LTF0246
Project Name: IL31 Cottonwood Hills RDF
Project Number: [none]
Date Received: 06/29/10

TestAmerica Los Angeles certifies that the test results provided in this report meet all NELAC requirements for parameters for which accreditation is required or available. Any exceptions to NELAC requirements are noted in the Corrective Action Report. NELAC Certificotion Number for TestAmerica Los Angeles is E87652. The test results listed within this Laboratory Report pertoin only to the samples tested at TestAmerica Los Angeles, unless otherwise indicated. This Laboratory Report is confidential and is intended for the sole use of TestAmerica and its client. This report shall not be reproduced, except in full, without written permission from TestAmerica.

The Chain of Custody, 1 page, is included and is an integral part of this report. This entire report wos reviewed ond approved for release.

If you have any questions relating to this analytical report, please contact your Laboratory Project Manager at 714-258-8610.

CASE NARRATIVE

All samples for method 25C have been corrected for nitrogen. Field conditions are used in this calculation. Samples for EPA 25C are analyzed in triplicate and 3C samples are run in duplicate. EPA 3C/25C results summary forms are available.

Approved By:

Marisol Tabirara
Project Manager

TestAmerica
THE LEADER IN ENVIRONMENTAL TESTING
3585 Cadillac Avenue, Suite A Costa Mesa, CA 92626 * 714-258-8610 * Fax 714-258-0921

Aquaterra Environmental Solution Fairview Heights 13 Executive drive, Suite 1 Fairview Heights, IL 62208 Tom Jacobsmeyer	Work Order: Project: Project Number:	LTF0246 IL31 Cottonwood Hills RDF [none]	Reeeived: 06/29/10 11:30 Reported: 07/20/10 12:42

SAMPLE IDENTIFICATION	LAB NUMBER	COLLECTION	MATRIX	CONTAINER TYPE
COTTONWOOD 1	LTF0246-01	06/24/10 12:58	Air	Passivated Canister
COTTONWOOD 2	LTF0246-02	06/24/10 13:56	Air	Passivated Canister
COTTONWOOD 3	LTF0246-03	06/24/10 14:55	Air	Passivated Canister

TestAmerica
THE LEADER IN ENVIRONMENTAL TESTING
3585 Cadillac Avenue, Suite A Costa Mesa, CA 92626 * 714-258-8610 * Fax 714-258-0921

Aquaterra Environmental Solution Fairview Heights 13 Executive drive, Suite 1 Fairview Heights, IL 62208 Tom Jacobsmeyer	Work Order: LTF0246 Project: IL31 Cottonwood Hills RDF Project Number: [none]	Received: 06/29/10 11:30 Reported: 07/20/10 12:42	

ANALYTICAL REPORT

Analyte	Result	Data Qualifiers	Units	RL	Dilution	Date Analyzed	Instrument	Analyst	QC Batch
Sample ID: LTF0246-01 (COTTONWOOD 1 - Air)						**Sampled: 06/24/10 12:58**			
ASTM D3588 - Heat of Combustion & Specific Gravity									
Gross Dry Heating Value	510		BTU/ft3	0.18	1.8	07/14/10 16:29	GC8	YZ	10F0221
EPA 25C - Total Nonmethane Organic Compounds									
Total Non-Methane Hydrocarbons as Methane	3900		ppm-C	54	1.8	07/14/10 16:03	GC8	EI	10G0074
EPA 3C - Fixed Gases									
Carbon dioxide	36		%(v/v)	0.018	1.8	07/14/10 16:29	GC8	EI	10G0074
Carbon monoxide	ND		%(v/v)	0.0018	1.8	07/14/10 16:29	GC8	EI	10G0074
Methane	50		%(v/v)	0.00036	1.8	07/14/10 16:29	GC8	EI	10G0074
Nitrogen	13		%(v/v)	1.8	1.8	07/14/10 16:29	GC8	EI	10G0074
Oxygen	1.0		%(v/v)	0.36	1.8	07/14/10 16:29	GC8	EI	10G0074

TestAmerica
THE LEADER IN ENVIRONMENTAL TESTING
3585 Cadillac Avenue, Suite A Costa Mesa, CA 92628 * 714-258-8610 * Fax 714-258-0921

Aquaterra Environmental Solution Fairview Heights 13 Executive drive, Suite 1 Fairview Heights, IL 62208 Tom Jacobsmeyer	Work Order: Project: Project Number:	LTF0246 IL31 Cottonwood Hills RDF [none]	Received: 06/29/10 11:30 Reported: 07/20/10 12:42

ANALYTICAL REPORT

Analyte	Result	Data Qualifiers	Units	RL	Dilution	Date Analyzed	Instrument	Analyst	QC Batch
Sample ID: LTF0246-02 (COTTONWOOD 2 - Air)						**Sampled: 06/24/10 13:56**			
ASTM D3588 - Heat of Combustion & Specific Gravity									
Gross Dry Heating Value	520		BTU/ft3	0.19	1.9	07/14/10 17:29	GC8	YZ	10F0221
EPA 25C - Total Nonmethane Organic Compounds									
Total Non-Methane Hydrocarbons as Methane	4100		ppm-C	56	1.9	07/14/10 17:29	GC8	EI	10G0074
EPA 3C - Fixed Gases									
Carbon dioxide	36		%(v/v)	0.019	1.9	07/14/10 17:29	GC8	EI	10G0074
Carbon monoxide	ND		%(v/v)	0.0019	1.9	07/14/10 17:29	GC8	EI	10G0074
Methane	51		%(v/v)	0.00037	1.9	07/14/10 17:29	GC8	EI	10G0074
Nitrogen	12		%(v/v)	1.9	1.9	07/14/10 17:29	GC8	EI	10G0074
Oxygen	1.0		%(v/v)	0.37	1.9	07/14/10 17:29	GC8	EI	10G0074

TestAmerica
THE LEADER IN ENVIRONMENTAL TESTING
3585 Cadillac Avenue, Suite A Costa Mesa, CA 92626 * 714-258-8610 * Fax 714-258-0921

Aquaterra Environmental Solution Fairview Heights 13 Executive drive, Suite 1 Fairview Heights, IL 62208 Tom Jacobsmeyer	Work Order: LTF0246 Project: IL31 Cottonwood Hills RDF Project Number: [none]	Received: 06/29/10 11:30 Reported: 07/20/10 12:42	

ANALYTICAL REPORT

Analyte	Result	Data Qualifiers	Units	RL	Dilution	Date Analyzed	Instrument	Analyst	QC Batch
Sample ID: LTF0246-03 (COTTONWOOD 3 - Air)						**Sampled: 06/24/10 14:55**			
ASTM D3588 - Heat of Combustion & Specific Gravity									
Gross Dry Heating Value	530		BTU/ft3	0.18	1.8	07/14/10 19:17	GC8	YZ	10F0221
EPA 25C - Total Nonmethane Organic Compounds									
Total Non-Methane Hydrocarbons as Methane	4500		ppm-C	55	1.8	07/14/10 18:50	GC8	EI	10G0074
EPA 3C - Fixed Gases									
Carbon dioxide	37		%(v/v)	0.018	1.8	07/14/10 19:17	GC8	EI	10G0074
Carbon monoxide	ND		%(v/v)	0.0018	1.8	07/14/10 19:17	GC8	EI	10G0074
Methane	52		%(v/v)	0.00036	1.8	07/14/10 19:17	GC8	EI	10G0074
Nitrogen	11		%(v/v)	1.8	1.8	07/14/10 19:17	GC8	EI	10G0074
Oxygen	0.51		%(v/v)	0.36	1.8	07/14/10 19:17	GC8	EI	10G0074

TestAmerica
THE LEADER IN ENVIRONMENTAL TESTING
3585 Cadillac Avenue, Suite A Costa Mesa, CA 92828 * 714-258-8610 * Fax 714-258-0921

Aquaterra Environmental Solution Fairview Heights 13 Executive drive, Suite 1 Fairview Heights, IL 62208 Tom Jacobsmeyer	Work Order: LTF0246 Project: IL31 Cottonwood Hills RDF Project Number: [none]	Received: 06/29/10 11:30 Reported: 07/20/10 12:42	

PROJECT QUALITY CONTROL DATA

Blank

Analyte	Result	Data Qualifier	Units	RL	Dilution	Date Analyzed	Instrument	Analyst	QC Batch
Sample ID: 10G0074-BLK1 (Blank - Air)									
EPA 25C - Total Nonmethane Organic Compounds									
Total Non-Methane Hydrocarbons as Methane	ND		ppm-C	30	1.00	07/14/10 15:33	GC8	EI	10G0074
Sample ID: 10G0074-BLK1 (Blank - Air)									
EPA 3C - Fixed Gases									
Carbon dioxide	ND		%(v/v)	0.010	1.00	07/14/10 15:33	GC8	EI	10G0074
Carbon monoxide	ND		%(v/v)	0.0010	1.00	07/14/10 15:33	GC8	EI	10G0074
Methane	ND		%(v/v)	0.00020	1.00	07/14/10 15:33	GC8	EI	10G0074
Nitrogen	ND		%(v/v)	1.0	1.00	07/14/10 15:33	GC8	EI	10G0074
Oxygen	ND		%(v/v)	0.20	1.00	07/14/10 15:33	GC8	EI	10G0074

TestAmerica
THE LEADER IN ENVIRONMENTAL TESTING
3585 Cadillac Avenue, Suite A Costa Mesa, CA 92626 * 714-258-8610 * Fax 714-258-0921

Aquaterra Environmental Solution Fairview Heights 13 Exeeutive drive, Suite 1 Fairview Heights, IL 62208 Tom Jacobsmeyer	Work Order: Project: Project Number:	LTF0246 IL31 Cottonwood Hills RDF [none]	Received: 06/29/10 11:30 Reported: 07/20/10 12:42

PROJECT QUALITY CONTROL DATA

LCS

Analyte	Result	Data Qualifiers	Units	RL	Dilution	Spike Conc	% Rec	Target Range	Instrument	Date Analyzed	QC Batch
Sample ID: 10G0074-BS2 (LCS - Air)											
EPA 25C - Total Nonmethane Organic Compounds											
Total Non-Methane Hydrocarbons as Meth	124		ppm-C	30	1.00	120	103%	80 - 120	GC8	07/14/10 14:31	10G0074
Sample ID: 10G0074-BS1 (LCS - Air)											
EPA 3C - Fixed Gases											
Carbon dioxide	1.02		%(v/v)	0.010	1.00	0.998	102%	75 - 125	GC8	07/14/10 06:38	10G0074
Carbon monoxide	0.0510		%(v/v)	0.0010	1.00	0.0455	112%	70 - 130	GC8	07/14/10 06:38	10G0074
Methane	0.0574		%(v/v)	0.00020	1.00	0.0500	115%	75 - 135	GC8	07/14/10 06:38	10G0074
Nitrogen	21.6		%(v/v)	1.0	1.00	19.9	108%	70 - 130	GC8	07/14/10 06:38	10G0074
Oxygen	5.45		%(v/v)	0.20	1.00	4.98	110%	70 - 130	GC8	07/14/10 06:38	10G0074

TestAmerica
THE LEADER IN ENVIRONMENTAL TESTING
3585 Cadillac Avenue, Suite A Costa Mesa, CA 92626 * 714-258-8610 * Fax 714-258-0921

Aquaterra Environmental Solution Fairview Heights 13 Executive drive, Suite 1 Fairview Heights, IL 62208 Tom Jacobsmeyer	Work Order: Project: Project Number:	LTF0246 IL31 Cottonwood Hills RDF [none]	Received: 06/29/10 11:30 Reported: 07/20/10 12:42

PROJECT QUALITY CONTROL DATA

LCS Dup

Analyte	Result	Data Qualifiers	Units	RL	Dilution	Spike Conc	% Rec	Target Range	RPD	Limit	Date Analyzed	QC Batch
Sample ID: 10G0074-BSD2 (LCS Dup - Air)												
EPA 25C - Total Nonmethane Organic Compounds												
Total Non-Methane Hydrocarbons as Methi	122		ppm-C	30	1.00	120	101%	80 - 120	2	20	07/14/10 14:57	10G0074
Sample ID: 10G0074-BSD1 (LCS Dup - Air)												
EPA 3C - Fixed Gases												
Carbon dioxide	1.02		%(v/v)	0.010	1.00	0.998	102%	75 - 125	0.05	20	07/14/10 06:54	10G0074
Carbon monoxide	0.0509		%(v/v)	0.0010	1.00	0.0455	112%	70 - 130	0.1	30	07/14/10 06:54	10G0074
Methane	0.0574		%(v/v)	0.00020	1.00	0.0500	115%	75 - 135	0.1	20	07/14/10 06:54	10G0074
Nitrogen	21.5		%(v/v)	1.0	1.00	19.9	108%	70 - 130	0.5	30	07/14/10 06:54	10G0074
Oxygen	5.42		%(v/v)	0.20	1.00	4.98	109%	70 - 130	0.6	30	07/14/10 06:54	10G0074

3585 Cadillac Avenue, Suite A Costa Mesa, CA 92626 * 714-258-8610 * Fax 714-258-0921

Aquaterra Environmental Solution Fairview Heights 13 Executive drive, Suite 1 Fairview Heights, IL 62208 Tom Jacobsmeyer	Work Order: Project: Project Number:	LTF0246 IL31 Cottonwood Hills RDF [none]	Received: Reported:	06/29/10 11:30 07/20/10 12:42

DATA QUALIFIERS AND DEFINITIONS

ND Not detected at the reporting limit (or method detection limit if shown)

TestAmerica ~~Burlington~~
~~30 Community Drive~~ 3585 Cadillac Ave. Suite A
~~Suite 11~~ COSTA MESA CA. 92626
~~South Burlington, VT 05403~~
phone 802-660-1990 fax 802-660-1919 ph 714 258 8610 fax 714 258 0921

Canister Samples Chain of Custody Record

TestAmerica Analytical Testing Corp. assumes no liability with respect to the collection and shipment of these samples.

LTF0246

Client Contact Information		Project Manager: Tom Jacobsmeyer	Samples Collected By: Tom Jacobsmeyer	1 of 1 COCs
Company: Aquaterra Environmental		Phone: (618) 980-1837		
Address: 13 Executive Dr. Suite 1		Email: tjacobsmeyer@aquaterra-env.com		
City/State/Zip Fairview Heights IL 62208				
Phone: (618) 628-2001		Site Contact:		
FAX: (618) 628-2002		TA Contact: Sorin Tabirara		
Project Name: Cottonwood ROF Flare Sampling		Analysis Turnaround Time		
Site: Cottonwood Hills RDF		Standard (Specify) X		
PO #		Rush (Specify)		

Sample Identification	Sample Date(s)	Time Start	Time Stop	Canister Vacuum in Field, "Hg (Start)	Canister Vacuum in Field, "Hg (Stop)	Flow Controller ID	Canister ID	TO-15	TO-14A	EPA 3C	EPA 25C	ASTM D-1946	Other (Please specify in notes section) *	Sample Type	Indoor Air	Ambient Air	Soil Gas	Landfill Gas	Other (Please specify in notes section)
Cottonwood 1	6/24/10	12:58	1:49	-30	-1	HF-100	4343			X	X		X					X	
Cottonwood 2	6/24/10	1:58	2:50	-30	-1	HF-100	4438			X	X		X					X	
Cottonwood 3	6/24/10	2:55	3:51	-30	-1	HF-100	3279			X	X		X					X	

Temperature (Fahrenheit)	Interior	Ambient
Start		81°
Stop		76°

Pressure (Inches of Hg)	Interior	Ambient
Start		29.9
Stop		29.9

* BTU Content ASTM D 3588?

Special Instructions/QC Requirements & Comments:

Samples Shipped by:	Date/Time: 6/24/10 6:00pm	Samples Received by:
Samples Relinquished by:	Date/Time: 6/29/10 1130	Received by:
Relinquished by:	Date/Time:	Received by:

LTF0246

Lab Use Only Shipper Name: Opened by: Condition:

TestAmerica

CANISTER FIELD DATA RECORD

CLIENT: AQUATERRA
CANISTER SERIAL #: BN- 4343
DATE CLEANED:
CLIENT SAMPLE #:
SITE LOCATION:

VFR ID:
Duration of comp. : Hrs. / mins.
Flow setting: ml/min
Initials:

READING	TIME	Vac. (inches Hg) Or PRESS. (psig)	DATE	INITIALS
INITIAL VACUUM CHECK				
INITIAL FIELD VACUUM				
FINAL FIELD READING				

LABORATORY CANISTER PRESSURIZATION			
INITIAL VACUUM (Inches Hg / PSIA (circle unit used))	13.60	6/29/10	JK
FINAL PRESSURE (PSIA)	24.40	6/29/10	JK

Pressurization Gas: N_2

COMMENTS:

COMPOSITE TIME (HOURS)	FLOW RATE RANGE (ml/min)
15 Min.	316 – 333
30 Min.	158 – 166.7
1	79.2 – 83.3
2	39.6 – 41.7
4	19.8 – 20.8
6	13.2 – 13.9
8	9.9 – 10.4
10	7.92 – 8.3
12	6.6 – 6.9
24	3.5 – 4.0

N:\COI\DOCS\TestAmerica DOCs\TestAmerica - CANISTER FIELD DATA RECORD - 20090201.doc

2

TestAmerica 2

THE LEADER IN ENVIRONMENTAL TESTING

CANISTER FIELD DATA RECORD

CLIENT: AQUATERRA

CANISTER SERIAL #: BN-4438

DATE CLEANED:

CLIENT SAMPLE #:

SITE LOCATION:

VFR ID:

Duration of comp. : Hrs. / mins.

Flow setting: ml/min

Initials:

READING	TIME	Vac. (Inches Hg) Or PRESS. (psig)	DATE	INITIALS
INITIAL VACUUM CHECK				
INITIAL FIELD VACUUM				
FINAL FIELD READING				

LABORATORY CANISTER PRESSURIZATION			
INITIAL VACUUM (Inches Hg/ PSIA (circle unit used))	13.26	6/29/10	JR
FINAL PRESSURE (PSIA)	24.55	6/29/10	JR

Pressurization Gas: N_2

COMMENTS:

COMPOSITE TIME (HOURS)	FLOW RATE RANGE (ml/min)
15 Min.	316 – 333
30 Min.	158 – 166.7
1	79.2 – 83.3
2	39.6 – 41.7
4	19.8 – 20.8
6	13.2 – 13.9
8	9.9 – 10.4
10	7.92 – 8.3
12	6.6 – 6.9
24	3.5 – 4.0

N:\CORDOCS\TestAmerica DOCs\TestAmerica - CANISTER FIELD DATA RECORD - 20080201.doc

3

TestAmerica

THE LEADER IN ENVIRONMENTAL TESTING

3

CANISTER FIELD DATA RECORD

CLIENT: AQUATERRA

CANISTER SERIAL #: BN- 3279

DATE CLEANED:

CLIENT SAMPLE #:

SITE LOCATION:

VFR ID:

Duration of comp. : Hrs. / mins.

Flow setting: ml/min

Initials:

READING	TIME	Vac. (Inches Hg) Or PRESS. (psig)	DATE	INITIALS
INITIAL VACUUM CHECK				
INITIAL FIELD VACUUM				
FINAL FIELD READING				

LABORATORY CANISTER PRESSURIZATION			
INITIAL VACUUM (Inches Hg / PSIA (circle unit used))	13.34	6/29/10	JG
FINAL PRESSURE (PSIA)	24.33	6/29/10	JG

Pressurization Gas: N_2

COMMENTS:

COMPOSITE TIME (HOURS)	FLOW RATE RANGE (ml/min)
15 Min.	316 – 333
30 Min.	158 – 166.7
1	79.2 – 83.3
2	39.6 – 41.7
4	19.8 – 20.8
6	13.2 – 13.9
8	9.9 – 10.4
10	7.92 – 8.3
12	6.6 – 6.9
24	3.5 – 4.0

N:\COI\DOCS\TestAmerica DOCs\TestAmerica - CANISTER FIELD DATA RECORD - 20080201.doc

TestAmerica

THE LEADER IN ENVIRONMENTAL TESTING

EPA 25C TRIPLICATE RESULTS

Date Analyzed / QC Batch: 07/14/10 / 10G0074

GC8 EPA 25C TNMOC SUMMARY REPORT

LAB SAMPLE ID#: LTF0246-01

		Date	Time	Dilution Factor
25C RAW DATA FILES Run 1:	G226-1	07/14/10	16:03	1.7941
Run 2:	G226-2	07/14/10	16:29	1.7941
Run 3:	G226-3	07/14/10	16:55	1.7941

EPA 25C DF: 1.79412 Date: 7/14/2010

	Run 1	Run 2	Run 3	Average			
	Results	Results	Results	Results	RSD=15%		BASE RL's
COMPOUND	ppm-c	ppm-c	ppm-c	ppm-c	%RSD	RL	ppm
TNMOC	3723.51	3869.06	4036.50	3880.0069	4.040	53.8	30

	Results	Results	Results	Results	RSD=15%
	%v/v	%v/v	%v/v	%v/v	%RSD
NITROGEN	12.8607	12.7487	12.0156	12.8882	0.662
NO N2 CORRECTION	92.2725	92.1605	92.3274		

COMMENTS: CANISTER PRE-PRESSURIZED WITH HELIUM 0

FINAL PRESSURE 24.40

INITIAL PRESSURE 13.60

Client readings: Temp.=76F; Press.= 29.9"Hg

Lab conversions: Temp.=24.4C; Press.= 759.46 mm Hg

Water Pressure = 16.894

TNMOC as CH4	RAW AMOUNT	ADJUSTED TNMOC RESULTS
RUN1	3033.054	3723.51
RUN2	3157.107	3869.06
RUN3	3285.189	4036.50

NMOC	ETHENE	ETHANE
3033.054	0.000	0.000
3157.107	0.000	0.000
3285.189	0.000	0.000

LEVEL 1 07/19/10 LEVEL2 07/20/10

GC8 EPA 25C TNMOC SUMMARY REPORT

LAB SAMPLE ID#: LTF0246.02

		Date	Time	Dilution Factor
25C RAW DATA FILES Run 1:	G227:1	07/14/10	17:29	1.8514
Run 2:	G227:2	07/14/10	17:56	1.8514
Run 3:	G227:3	07/14/10	18:23	1.8514

EPA 25C DF: 1.85143 Date: 7/14/2010

	Run 1	Run 2	Run 3	Average			BASE RL's
	Results	Results	Results	Results	RSD=15%		
COMPOUND	ppm-c	ppm-c	ppm-c	ppm-c	%RSD	RL	ppm
TNMOC	3929.69	4151.16	4300.82	4115.2526	4.524	55.5	30

	Results	Results	Results	Results	RSD=15%
	%v/v	%v/v	%v/v	%v/v	%RSD
NITROGEN	11.5091	11.5328	11.5311	11.5201	0.115
NO N2 CORRECTION	98.6524	98.6761	98.6744		

COMMENTS: CANISTER PRE-PRESSURIZED WITH HELIUM 0

FINAL PRESSURE 24.55

INITIAL PRESSURE 13.26

Client readings: Temp.=76F; Press.= 29.9"Hg

Lab conversions: Temp.=24.4C; Press.= 759.46 mm Hg

Water Pressure = 16.894

TNMOC as CH4	RAW AMOUNT	ADJUSTED TNMOC RESULTS
RUN1	3268.411	3929.69
RUN2	3451.369	4151.16
RUN3	3575.887	4300.82

NMOC	ETHENE	ETHANE
3268.411	0.000	0.000
3451.369	0.000	0.000
3575.887	0.000	0.000

LEVEL 1 LS 7/19/10 LEVEL2 WA 7-20-10

GC8 EPA 25C TNMOC SUMMARY REPORT

LAB SAMPLE ID#: LTF0246-03

		Date	Time	Dilution Factor
25C RAW DATA FILES Run 1:	G228-1	07/14/10	18:50	1.8238
Run 2:	G228-2	07/14/10	19:17	1.8238
Run 3:	G228-3	07/14/10	19:43	1.8238

EPA 25C DF: 1.82384 Date: 7/14/2010

	Run 1	Run 2	Run 3	Average			
	Results	Results	Results	Results	RSD=15%		BASE RL's
COMPOUND	ppm-c	ppm-c	ppm-c	ppm-c	%RSD	RL	ppm
TNMOC	4409.66	4436.33	4620.88	4515.2700	2.562	54.7	30

	Results	Results	Results	Results	RSD=15%
	%v/v	%v/v	%v/v	%v/v	%RSD
NITROGEN	10.7491	10.6641	10.6703	10.7097	0.443
NO N2 CORRECTION	93.1329	93.0479	93.0541		

COMMENTS: CANISTER PRE-PRESSURIZED WITH HELIUM 0

FINAL PRESSURE 24.93

INITIAL PRESSURE 13.34

Client readings: Temp.=76F; Press.= 29.9"Hg

Lab conversions: Temp.=24.4C; Press.= 759.46 mm Hg

Water Pressure = 16.894

TNMOC as CH4	RAW AMOUNT	ADJUSTED TNMOC RESULTS
RUN1	3710.150	4409.66
RUN2	3737.376	4436.33
RUN3	3892.490	4620.88

NMOC	ETHENE	ETHANE
3710.150	0.000	0.000
3737.376	0.000	0.000
3892.490	0.000	0.000

LEVEL 1 7/19/10 LEVEL2 7/20/10

WM00463

TestAmerica

THE LEADER IN ENVIRONMENTAL TESTING

EPA 3C DUPLICATE RESULTS

Date Analyzed / QC Batch: 07/14/10 / 10G0074

TESTAMERICA LOS ANGELES

EPA 3C SAMPLE RESULTS SUMMARY CALCULATION

Lot ID: LTF0246-01
Data File(s): g226 -2
Date Acquired: 7/14/2010 16:29 ; 16:56
Dilution Factor: 1.79

Final(F) Lab Pressure: 24.40
Sample(S) Receipt Pressure: 13.60
Prepressurized? (He,NO): NO
Lab Pressurized? (N2,NO): N2
Pre-pressure: 0
Serial Dilution: 1

Analyte	RUN1 PPM(v/v)	RUN2 PPM(v/v)	RPD (10%)	AVERAGE PPM(v/v)	AVERAGE %v/v	RL %v/v	BASE RL %v/v
Carbon Dioxide:	357953.38	358606.44	0.18	358279.91	35.827991	0.01794	0.01
Oxygen/Argon:	10440	10449	0.09	10444	1.044446	0.35882	0.2
Nitrogen:	127487	129155	1.30	128321	12.832076	1.79412	1
Methane:	498343.09	499331.65	0.20	498837.37	49.883737	0.00036	0.0002
Ethene:	0.00	0.00	#DIV/0!	0.00	0.000000	0.00179	0.001
Ethane:	0.00	0.00	#DIV/0!	0.00	0.000000	0.00090	0.0005
Hydrogen	0	0	#DIV/0!	0.00	0.000000	0.03588	0.02
Helium	0	0	#DIV/0!	0.00	0.000000	0.03588	0.02
Carbon Monoxide:	0.00	0.00	#DIV/0!	0.00	0.000000	0.00179	0.001
%Total:	99.422	99.754					

	RUN1 PPM(v/v)	RUN2 PPM(v/v)	RUN1 %(v/v)	RUN2 %(v/v)
Nitrogen File Result:	513681	514611	51.3681	51.4611

LEVEL 1 [illegible] 7/15/10

LEVEL2 [illegible] 7/16/10

Note: Calculation for Nitrogen last validated by QA on 6-23-2008.

TESTAMERICA LOS ANGELES

EPA 3C SAMPLE RESULTS SUMMARY CALCULATION

Lot ID: LTF0246-02
Data File(s): g227 -1
Date Acquired: 7/14/2010 17:29 ; 17:56
Dilution Factor: 1.85

Final(F) Lab Pressure: 24.55
Sample(S) Receipt Pressure: 13.26
Prepressurized? (He,NO): NO
Lab Pressurized? (N2,NO): N2
Pre-pressure: 0
Serial Dilution: 1

Analyte	RUN1 PPM(v/v)	RUN2 PPM(v/v)	RPD (10%)	AVERAGE PPM(v/v)	AVERAGE %v/v	RL %v/v	BASE RL %v/v
Carbon Dioxide:	363315.93	364745.24	0.39	364030.58	36.403058	0.01851	0.01
Oxygen/Argon:	10325	9600	7.28	9963	0.996256	0.37029	0.2
Nitrogen:	115093	115330	0.21	115211	11.521133	1.85143	1
Methane:	507113.02	508527.52	0.28	507820.27	50.782027	0.00037	0.0002
Ethene:	0.00	0.00	#DIV/0!	0.00	0.000000	0.00185	0.001
Ethane:	0.00	0.00	#DIV/0!	0.00	0.000000	0.00093	0.0005
Hydrogen	0	0	#DIV/0!	0.00	0.000000	0.03703	0.02
Helium	0	0	#DIV/0!	0.00	0.000000	0.03703	0.02
Carbon Monoxide:	0.00	0.00	#DIV/0!	0.00	0.000000	0.00185	0.001
%Total:	99.585	99.820					

	RUN1 PPM(v/v)	RUN2 PPM(v/v)	RUN1 %(v/v)	RUN2 %(v/v)
Nitrogen File Result:	522042	522170	52.2042	52.217

LEVEL 1 [illegible] 7/15/10 LEVEL2 [illegible]

Note: Calculation for Nitrogen last validated by QA on 6-23-2008.

TESTAMERICA LOS ANGELES

EPA 3C SAMPLE RESULTS SUMMARY CALCULATION

Lot ID: LTF0246-03
Data File(s): g228 -2
Date Acquired: 7/14/2010 19:17 ; 19:43
Dilution Factor: 1.82

Final(F) Lab Pressure: 24.33
Sample(S) Receipt Pressure: 13.34
Prepressurized? (He,NO): NO
Lab Pressurized? (N2,NO): N2
Pre-pressure: 0
Serial Dilution: 1

Analyte	RUN1 PPM(v/v)	RUN2 PPM(v/v)	RPD (10%)	AVERAGE PPM(v/v)	AVERAGE %v/v	RL %v/v	BASE RL %v/v
Carbon Dioxide:	369945.49	369925.43	0.01	369935.46	36.993546	0.01824	0.01
Oxygen/Argon:	5054	5056	0.04	5055	0.505477	0.36477	0.2
Nitrogen:	106640	106702	0.06	106671	10.667134	1.82384	1
Methane:	515243.38	515216.02	0.01	515229.70	51.522970	0.00036	0.0002
Ethene:	0.00	0.00	#DIV/0!	0.00	0.000000	0.00182	0.001
Ethane:	0.00	0.00	#DIV/0!	0.00	0.000000	0.00091	0.0005
Hydrogen	0	0	#DIV/0!	0.00	0.000000	0.03648	0.02
Helium	0	0	#DIV/0!	0.00	0.000000	0.03648	0.02
Carbon Monoxide:	0.00	0.00	#DIV/0!	0.00	0.000000	0.00182	0.001
%Total:	99.688	99.690					

	RUN1 PPM(v/v)	RUN2 PPM(v/v)	RUN1 %(v/v)	RUN2 %(v/v)
Nitrogen File Result:	510176	510210	51.0176	51.021

LEVEL 1 [illegible] 7/15/10 LEVEL2 [illegible]

Note: Calculation for Nitrogen last validated by QA on 6-23-2008.

WM00467

Columbia Analytical Services™ 2655 Park Center Drive, Suite 4 | Simi Valley, CA 93065 | 805 526 7161 | 805 526 7270 fax | www.caslab.com

LABORATORY REPORT

July 12, 2010

Tom Jacobsmeyer
Aquaterra Environmental Solutions, Inc.
13 Executive Dr., Suite 1
Fairview Heights, IL 62208

RE: Cottonwood Hills RDF Flare Sampling / 4121.10

Dear Tom:

Enclosed are the results of the samples submitted to our laboratory on June 25, 2010. For your reference, these analyses have been assigned our service request number P1002202.

All analyses were performed according to our laboratory's NELAP-approved quality assurance program. The test results meet requirements of the current NELAP standards, where applicable, and except as noted in the laboratory case narrative provided. For a specific list of NELAP-accredited analytes, refer to the certifications section at www.caslab.com. Results are intended to be considered in their entirety and apply only to the samples analyzed and reported herein. Your report contains 10 pages.

Columbia Analytical Services, Inc. is certified by the California Department of Health Services, NELAP Laboratory Certificate No. 02115CA; Arizona Department of Health Services, Certificate No. AZ0694; Florida Department of Health, NELAP Certification E871020; New Jersey Department of Environmental Protection, NELAP Laboratory Certification ID #CA009; New York State Department of Health, NELAP NY Lab ID No: 11221; Oregon Environmental Laboratory Accreditation Program, NELAP ID: CA20007; The American Industrial Hygiene Association, Laboratory #101661; United States Department of Defense Environmental Laboratory Accreditation Program (DoD-ELAP), Certificate No. L10-3; Pennsylvania Registration No. 68-03307; TX Commission of Environmental Quality, NELAP ID T104704413-09-TX; Minnesota Department of Health, Certificate No. 11495AA; Washington State Department of Ecology, ELAP Lab ID: C946. Each of the certifications listed above have an explicit Scope of Accreditation that applies to specific matrices/methods/analytes; therefore, please contact me for information corresponding to a particular certification.

If you have any questions, please call me at (805) 526-7161.

Respectfully submitted,

Columbia Analytical Services, Inc.

Sue Anderson
Project Manager

© 100% Recycled Paper

Client:	Aquaterra Environmental Solutions, Inc.	CAS Project No:	P1002202
Project:	Cottonwood Hills RDF Flare Sampling / 4121.10		

CASE NARRATIVE

The samples were received intact under chain of custody on June 25, 2010 and were stored in accordance with the analytical method requirements. Please refer to the sample acceptance check form for additional information. The results reported herein are applicable only to the condition of the samples at the time of sample receipt.

Sulfur Analysis

The samples were analyzed for twenty sulfur compounds per ASTM D 5504-08 using a gas chromatograph equipped with a sulfur chemiluminescence detector (SCD). All compounds with the exception of hydrogen sulfide and carbonyl sulfide are quantitated against the initial calibration curve for methyl mercaptan.

The results of analyses are given in the attached laboratory report. All results are intended to be considered in their entirety, and Columbia Analytical Services, Inc. (CAS) is not responsible for utilization of less than the complete report.

Client: Aquaterra Environmental Solutions, Inc.
Project: Cottonwood Hills RDF Flare Sampling/4121.10

Service Request: P1002202

SAMPLE CROSS-REFERENCE

SAMPLE #	CLIENT SAMPLE ID	DATE	TIME
P1002202-001	Cottonwood 1	6/24/10	15:55
P1002202-002	Cottonwood 2	6/24/10	15:57
P1002202-003	Cottonwood 3	6/24/10	15:59

3

Air - Chain of Custody Record & Analytical Service Request

Page 1 of 1

Columbia Analytical Services
An Employee-Owned Company
2655 Park Center Drive, Suite A
Simi Valley, California 93065
Phone (805) 526-7161
Fax (805) 526-7270

Requested Turnaround Time in Business Days (Surcharges) please circle
1 Day (100%) 2 Day (75%) 3 Day (50%) 4 Day (35%) 5 Day (25%) 10 Day - Standard

CAS Project No. 91002202

CAS Contact

Company Name & Address (Reporting Information): Aquaterra Environmental, 13 Executive Pr. Suite 1, Fairview Heights IL 62208

Project Name: Cottonwood Hills RDF Flare Sampling

Project Number: 4121.10

Project Manager: Tom Jacobsmeyer

P.O. # / Billing Information:

Phone: (618) 980-1837

Fax: (618) 628-2002

Email Address for Result Reporting: tjacobsmeyer@aquaterra-env.com

Sampler (Print & Sign): Tom Jacobsmeyer

Analysis Method and/or Analytes

Client Sample ID	Laboratory ID Number	Date Collected	Time Collected	Sample Type (Air/Tube/Solid)	Canister ID (Bar Code # - AC, SC, etc.)	Flow Controller (Bar Code - FC #)	Sample Volume	ASTM D5504 total Sulfur Compounds				Comments e.g. Actual Preservative or specific instructions
Cottonwood 1	1	6/24/10	3:55	AIR	-	-	.5L	X				
Cottonwood 2	2	6/24/10	3:57	AIR	-	-	.5L	X				
Cottonwood 3	3	6/24/10	3:59	AIR	-	-	.5L	X				

Report Tier Levels - please select
Tier I - (Results/Detail if not specified)
Tier II - (Results + QC)
Tier III - (Data Validation Package) 10% Surcharge
Tier V - (client specified)
EDD required Yes / No
Type
EDD Units:

Project Requirements (MRLs, QAPP)

Relinquished by: (Signature)	Date:	Time:	Received by: (Signature)	Date:	Time:
[signature]	6/24/10	6:00	Fed Ex	6/24/10	6:00
[signature]			[signature]	6/25/10	0930

Cooler / Blank

Temperature ____ °C

* Time

WM00471

Columbia Analytical Services, Inc.
Sample Acceptance Check Form

Client: Aquaterra Environmental Solutions, Inc. Work order: P1002202

Project: Cottonwood Hills RDF Flare Sampling / 4121.10

Sample(s) received on: 6/25/2010 Date opened: 6/25/2010 by: MZAMORA

Note: This form is used for all samples received by CAS. The use of this form for custody seals is strictly meant to indicate presence/absence and not as an indication of compliance or nonconformity. Thermal preservation and pH will only be evaluated either at the request of the client and/or as required by the method/SOP.

		Yes	No	N/A
1	Were **sample containers** properly marked with client sample ID?	☒	☐	☐
2	Container(s) **supplied by CAS**?	☐	☒	☐
3	Did **sample containers** arrive in good condition?	☒	☐	☐
4	Was a **chain-of-custody** provided?	☒	☐	☐
5	Was the **chain-of-custody** properly completed?	☒	☐	☐
6	Did **sample container labels** and/or tags agree with custody papers?	☒	☐	☐
7	Was **sample volume** received adequate for analysis?	☒	☐	☐
8	Are samples within specified holding times?	☒	☐	☐
9	Was proper **temperature** (thermal preservation) of cooler at receipt adhered to?	☐	☐	☒
	Cooler Temperature _____ °C Blank Temperature _____ °C			
10	Was a **trip blank** received?	☐	☐	☒
	Trip blank supplied by CAS: _____			
11	Were **custody seals** on outside of cooler/Box?	☐	☒	☐
	Location of seal(s)? _____ Sealing Lid?	☐	☐	☒
	Were signature and date included?	☐	☐	☒
	Were seals intact?	☐	☐	☒
	Were custody seals on outside of sample container?	☐	☒	☐
	Location of seal(s)? _____ Sealing Lid?	☐	☐	☒
	Were signature and date included?	☐	☐	☒
	Were seals intact?	☐	☐	☒
12	Do containers have appropriate **preservation**, according to method/SOP or Client specified information?	☐	☐	☒
	Is there a client indication that the submitted samples are **pH** preserved?	☐	☐	☒
	Were **VOA vials** checked for presence/absence of air bubbles?	☐	☐	☒
	Does the client/method/SOP require that the analyst check the sample pH and if necessary alter it?	☐	☐	☒
13	**Tubes:** Are the tubes capped and intact?	☐	☐	☒
	Do they contain moisture?	☐	☐	☒
14	**Badges:** Are the badges properly capped and intact?	☐	☐	☒
	Are dual bed badges separated and individually capped and intact?	☐	☐	☒

Lab Sample ID	Container Description	Required pH *	Received pH	Adjusted pH	VOA Headspace (Presence/Absence)	Receipt / Preservation Comments
P1002202-001.01	1.0 L Tedlar Bag					
P1002202-002.01	1.0 L Tedlar Bag					
P1002202-003.01	1.0 L Tedlar Bag					

Explain any discrepancies: (include lab sample ID numbers): _____

*Required pH: Phenols/COD/NH3/TOC/TOX/NO3+NO2/TKN/T.PHOS, H2SO4 (pH<2); Metals, HNO3 (pH<2); CN (NaOH or NaOH/Asc Acid) (pH>12); Diss. Sulfide, NaOH (pH>12); T. Sulfide, NaOH/ZnAc (pH>12) RSK - MEEPP, HCL (pH<2); RSK - CO2, (pH 5-8); Sulfur (pH>4)

COLUMBIA ANALYTICAL SERVICES, INC.

RESULTS OF ANALYSIS

Client: Aquaterra Environmental Solutions, Inc.
Client Sample ID: Cottonwood 1
Client Project ID: Cottonwood Hills RDF Flare Sampling / 4121.10

CAS Project ID: P1002202
CAS Sample ID: P1002202-001

Test Code: ASTM D 5504-08
Instrument ID: Agilent 7890A/GC22/SCD
Analyst: Zheng Wang
Sampling Media: 1.0 L Tedlar Bag
Test Notes:

Date Collected: 6/24/10
Time Collected: 15:55
Date Received: 6/25/10
Date Analyzed: 6/25/10
Time Analyzed: 14:38
Volume(s) Analyzed: 1.0 ml(s)

CAS #	Compound	Result µg/m³	MRL µg/m³	Result ppbV	MRL ppbV	Data Qualifier
7783-06-4	Hydrogen Sulfide	22,000	7.0	16,000	5.0	
463-58-1	Carbonyl Sulfide	170	12	70	5.0	
74-93-1	Methyl Mercaptan	5,100	9.8	2,600	5.0	
75-08-1	Ethyl Mercaptan	210	13	82	5.0	
75-18-3	Dimethyl Sulfide	14,000	13	5,700	5.0	
75-15-0	Carbon Disulfide	140	7.8	46	2.5	
75-33-2	Isopropyl Mercaptan	670	16	220	5.0	
75-66-1	tert-Butyl Mercaptan	1,200	18	330	5.0	
107-03-9	n-Propyl Mercaptan	78	16	25	5.0	
624-89-5	Ethyl Methyl Sulfide	190	16	62	5.0	
110-02-1	Thiophene	880	17	260	5.0	
513-44-0	Isobutyl Mercaptan	270	18	73	5.0	W
352-93-2	Diethyl Sulfide	38	18	10	5.0	
109-79-5	n-Butyl Mercaptan	110	18	30	5.0	
624-92-0	Dimethyl Disulfide	480	9.6	120	2.5	
616-44-4	3-Methylthiophene	250	20	63	5.0	
110-01-0	Tetrahydrothiophene	52	18	14	5.0	
638-02-8	2,5-Dimethylthiophene	29	23	6.3	5.0	
872-55-9	2-Ethylthiophene	35	23	7.7	5.0	
110-81-6	Diethyl Disulfide	ND	12	ND	2.5	

ND = Compound was analyzed for, but not detected above the laboratory reporting limit.
MRL = Method Reporting Limit - The minimum quantity of a target analyte that can be confidently determined by the referenced method.
W = Result quantified, but the corresponding peak was detected outside of generated retention time window.

Verified By: _____ Date: 7/8/10

COLUMBIA ANALYTICAL SERVICES, INC.

RESULTS OF ANALYSIS

Client: Aquaterra Environmental Solutions, Inc.
Client Sample ID: Cottonwood 2
Client Project ID: Cottonwood Hills RDF Flare Sampling / 4121.10

CAS Project ID: P1002202
CAS Sample ID: P1002202-002

Test Code: ASTM D 5504-08
Instrument ID: Agilent 7890A/GC22/SCD
Analyst: Zheng Wang
Sampling Media: 1.0 L Tedlar Bag
Test Notes:

Date Collected: 6/24/10
Time Collected: 15:57
Date Received: 6/25/10
Date Analyzed: 6/25/10
Time Analyzed: 15:02
Volume(s) Analyzed: 1.0 ml(s)

CAS #	Compound	Result µg/m³	MRL µg/m³	Result ppbV	MRL ppbV	Data Qualifier
7783-06-4	Hydrogen Sulfide	23,000	7.0	17,000	5.0	
463-58-1	Carbonyl Sulfide	190	12	77	5.0	
74-93-1	Methyl Mercaptan	5,400	9.8	2,700	5.0	
75-08-1	Ethyl Mercaptan	220	13	86	5.0	
75-18-3	Dimethyl Sulfide	16,000	13	6,100	5.0	
75-15-0	Carbon Disulfide	150	7.8	49	2.5	
75-33-2	Isopropyl Mereaptan	720	16	230	5.0	
75-66-1	tert-Butyl Mercaptan	1,300	18	350	5.0	
107-03-9	n-Propyl Mercaptan	82	16	26	5.0	
624-89-5	Ethyl Methyl Sulfide	210	16	67	5.0	
110-02-1	Thiophene	960	17	280	5.0	
513-44-0	Isobutyl Mercaptan	290	18	80	5.0	W
352-93-2	Diethyl Sulfide	42	18	11	5.0	
109-79-5	n-Butyl Mercaptan	130	18	34	5.0	
624-92-0	Dimethyl Disulfide	530	9.6	140	2.5	
616-44-4	3-Methylthiophene	270	20	68	5.0	
110-01-0	Tetrahydrothiophene	49	18	14	5.0	
638-02-8	2,5-Dimethylthiophene	29	23	6.4	5.0	
872-55-9	2-Ethylthiophene	27	23	5.8	5.0	
110-81-6	Diethyl Disulfide	ND	12	ND	2.5	

ND = Compound was analyzed for, but not detected above the laboratory reporting limit.
MRL = Method Reporting Limit - The minimum quantity of a target analyte that can be confidently determined by the referenced method.
W = Result quantified, but the corresponding peak was detected outside of generated retention time window.

Verified By: _____ Date: 7/8/10

COLUMBIA ANALYTICAL SERVICES, INC.

RESULTS OF ANALYSIS

Client: Aquaterra Environmental Solutions, Inc.
Client Sample ID: Cottonwood 3
Client Project ID: Cottonwood Hills RDF Flare Sampling / 4121.10

CAS Project ID: P1002202
CAS Sample ID: P1002202-003

Test Code: ASTM D 5504-08
Instrument ID: Agilent 7890A/GC22/SCD
Analyst: Zheng Wang
Sampling Media: 1.0 L Tedlar Bag
Test Notes:

Date Collected: 6/24/10
Time Collected: 15:59
Date Received: 6/25/10
Date Analyzed: 6/25/10
Time Analyzed: 15:21
Volume(s) Analyzed: 1.0 ml(s)

CAS #	Compound	Result µg/m³	MRL µg/m³	Result ppbV	MRL ppbV	Data Qualifier
7783-06-4	Hydrogen Sulfide	26,000	7.0	18,000	5.0	
463-58-1	Carbonyl Sulfide	190	12	76	5.0	
74-93-1	Methyl Mercaptan	5,800	9.8	2,900	5.0	
75-08-1	Ethyl Mercaptan	240	13	96	5.0	
75-18-3	Dimethyl Sulfide	16,000	13	6,200	5.0	
75-15-0	Carbon Disulfide	160	7.8	50	2.5	
75-33-2	Isopropyl Mercaptan	750	16	240	5.0	
75-66-1	tert-Butyl Mercaptan	1,300	18	360	5.0	
107-03-9	n-Propyl Mercaptan	87	16	28	5.0	
624-89-5	Ethyl Methyl Sulfide	210	16	67	5.0	
110-02-1	Thiophene	1,000	17	290	5.0	
513-44-0	Isobutyl Mercaptan	290	18	79	5.0	W
352-93-2	Diethyl Sulfide	40	18	11	5.0	
109-79-5	n-Butyl Mercaptan	120	18	32	5.0	
624-92-0	Dimethyl Disulfide	480	9.6	120	2.5	
616-44-4	3-Methylthiophene	260	20	66	5.0	
110-01-0	Tetrahydrothiophene	47	18	13	5.0	
638-02-8	2,5-Dimethylthiophene	28	23	6.0	5.0	
872-55-9	2-Ethylthiophene	29	23	6.3	5.0	
110-81-6	Diethyl Disulfide	ND	12	ND	2.5	

ND = Compound was analyzed for, but not detected above the laboratory reporting limit.
MRL = Method Reporting Limit - The minimum quantity of a target analyte that can be confidently determined by the referenced method.
W = Result quantified, but the corresponding peak was detected outside of generated retention time window.

Verified By: _____ Date: 7/8/10

COLUMBIA ANALYTICAL SERVICES, INC.

RESULTS OF ANALYSIS

Client: **Aquaterra Environmental Solutions, Inc.**
Client Sample ID: **Method Blank**
Client Project ID: **Cottonwood Hills RDF Flare Sampling / 4121.10**

CAS Project ID: P1002202
CAS Sample ID: P100625-MB

Test Code: ASTM D 5504-08
Instrument ID: Agilent 7890A/GC22/SCD
Analyst: Zheng Wang
Sampling Media: 1.0 L Tedlar Bag
Test Notes:

Date Collected: NA
Time Collected: NA
Date Received: NA
Date Analyzed: 6/25/10
Time Analyzed: 07:57
Volume(s) Analyzed: 1.0 ml(s)

CAS #	Compound	Result µg/m³	MRL µg/m³	Result ppbV	MRL ppbV	Data Qualifier
7783-06-4	Hydrogen Sulfide	ND	7.0	ND	5.0	
463-58-1	Carbonyl Sulfide	ND	12	ND	5.0	
74-93-1	Methyl Mercaptan	ND	9.8	ND	5.0	
75-08-1	Ethyl Mercaptan	ND	13	ND	5.0	
75-18-3	Dimethyl Sulfide	ND	13	ND	5.0	
75-15-0	Carbon Disulfide	ND	7.8	ND	2.5	
75-33-2	Isopropyl Mercaptan	ND	16	ND	5.0	
75-66-1	tert-Butyl Mercaptan	ND	18	ND	5.0	
107-03-9	n-Propyl Mercaptan	ND	16	ND	5.0	
624-89-5	Ethyl Methyl Sulfide	ND	16	ND	5.0	
110-02-1	Thiophene	ND	17	ND	5.0	
513-44-0	Isobutyl Mercaptan	ND	18	ND	5.0	
352-93-2	Diethyl Sulfide	ND	18	ND	5.0	
109-79-5	n-Butyl Mercaptan	ND	18	ND	5.0	
624-92-0	Dimethyl Disulfide	ND	9.6	ND	2.5	
616-44-4	3-Methylthiophene	ND	20	ND	5.0	
110-01-0	Tetrahydrothiophene	ND	18	ND	5.0	
638-02-8	2,5-Dimethylthiophene	ND	23	ND	5.0	
872-55-9	2-Ethylthiophene	ND	23	ND	5.0	
110-81-6	Diethyl Disulfide	ND	12	ND	2.5	

ND = Compound was analyzed for, but not detected above the laboratory reporting limit.
MRL = Method Reporting Limit - The minimum quantity of a target analyte that can be confidently determined by the referenced method.

Verified By: _____ Date: 7/8/10

COLUMBIA ANALYTICAL SERVICES, INC.

LABORATORY CONTROL SAMPLE SUMMARY

Client: **Aquaterra Environmental Solutions, Inc.**
Client Sample ID: **Lab Control Sample** — CAS Project ID: P1002202
Client Project ID: **Cottonwood Hills RDF Flare Sampling / 4121.10** — CAS Sample ID: P100625-LCS

Test Code: ASTM D 5504-08 — Date Collected: NA
Instrument ID: Agilent 7890A/GC22/SCD — Date Received: NA
Analyst: Zheng Wang — Date Analyzed: 6/25/10
Sampling Media: 1.0 L Tedlar Bag — Volume(s) Analyzed: NA ml(s)
Test Notes:

CAS #	Compound	Spike Amount ppbV	Result ppbV	% Recovery	CAS Acceptance Limits	Data Qualifier
7783-06-4	Hydrogen Sulfide	1,920	**2,230**	116	71-129	
463-58-1	Carbonyl Sulfide	1,920	**2,030**	106	66-120	
74-93-1	Methyl Mercaptan	1,950	**1,670**	86	59-136	

Verified By: _____ Date: 7/8/10

TestAmerica
THE LEADER IN ENVIRONMENTAL TESTING
3585 Cadillac Avenue, Suite A Costa Mesa, CA 92626 * 714-258-8610 * Fax 714-258-0921

November 09, 2010

LABORATORY REPORT

Client:
Aquaterra Environmental Solution Fairview Heights
13 Executive drive, Suite I
Fairview Heights, IL 62208
Attn: Tom Jacobsmeyer

Work Order:	LTK0023
Project Name:	IL31 Cottonwood Hills RDF
Project Number:	[none]
Date Received:	11/02/10

TestAmerica Los Angeles certifies that the test results provided in this report meet all NELAC requirements for parameters for which accreditation is required or available. Any exceptions to NELAC requirements are noted in the Corrective Action Report. NELAC Certification Number for TestAmerica Los Angeles is E87652. The test results listed within this Laboratory Report pertain only to the samples tested at TestAmerica Los Angeles, unless otherwise indicated. This Laboratory Report is confidential and is intended for the sole use of TestAmerica and its client. This report shall not be reproduced, except in full, without written permission from TestAmerica.

The Chain of Custody, 1 page, is included and is an integral part of this report. This entire report was reviewed and approved for release.

If you have any questions relating to this analytical report, please contact your Laboratory Project Manager at 714-258-8610.

CASE NARRATIVE

All samples for method 25C have been corrected for nitrogen. STP conditions are used in this calculation. Samples for EPA 25C are analyzed in triplicate and 3C samples are run in duplicate. EPA 3C/25C results summary forms are available.

Approved By:

Marisol Tabirara
Project Manager

TestAmerica
THE LEADER IN ENVIRONMENTAL TESTING
3585 Cadillac Avenue, Suite A Costa Mesa, CA 92626 * 714-258-8610 * Fax 714-258-0921

Aquaterra Environmental Solution Fairview Heights 13 Executive drive, Suite 1 Fairview Heights, IL 62208 Tom Jacobsmeyer	Work Order: Project: Project Number:	LTK0023 IL31 Cottonwood Hills RDF [none]	Received: Reported:	11/02/10 11:15 11/09/10 12:32

SAMPLE IDENTIFICATION	LAB NUMBER	COLLECTION	MATRIX	CONTAINER TYPE
COTTONWOOD 4	LTK0023-01	10/28/10 13:45	Air	Passivated Canister
COTTONWOOD 5	LTK0023-02	10/28/10 14:35	Air	Passivated Canister
COTTONWOOD 6	LTK0023-03	10/28/10 15:25	Air	Passivated Canister

TestAmerica
THE LEADER IN ENVIRONMENTAL TESTING
3585 Cadillac Avenue, Suite A Costa Mesa, CA 92626 * 714-258-8610 * Fax 714-258-0921

Aquaterra Environmental Solution Fairview Heights 13 Executive drive, Suite 1 Fairview Heights, IL 62208 Tom Jacobsmeyer	Work Order: Project: Project Number:	LTK0023 IL31 Cottonwood Hills RDF [none]	Received: Reported:	11/02/10 11:15 11/09/10 12:32

ANALYTICAL REPORT

Analyte	Result	Data Qualifiers	Units	RL	Dilution	Date Analyzed	Instrument	Analyst	QC Batch
Sample ID: LTK0023-01 (COTTONWOOD 4 - Air)						**Sampled: 10/28/10 13:45**			
ASTM D3588 - Heat of Combustion & Specific Gravity									
Gross Dry Heating Value	520		BTU/ft3	0.17	1.7	11/04/10 20:23	GC8	YZ	10K0050
EPA 25C - Total Nonmethane Organic Compounds									
Total Non-Methane Hydrocarbons as Methane	3300		ppm-C	50	1.7	11/04/10 20:23	GC8	EI	10K0044
EPA 3C - Fixed Gases									
Carbon dioxide	38		%(v/v)	0.017	1.7	11/04/10 20:23	GC8	EI	10K0044
Carbon monoxide	ND		%(v/v)	0.0017	1.7	11/04/10 20:23	GC8	EI	10K0044
Methane	52		%(v/v)	0.00033	1.7	11/04/10 20:23	GC8	EI	10K0044
Nitrogen	9.7		%(v/v)	1.7	1.7	11/04/10 20:23	GC8	EI	10K0044
Oxygen	0.34		%(v/v)	0.33	1.7	11/04/10 20:23	GC8	EI	10K0044

TestAmerica
THE LEADER IN ENVIRONMENTAL TESTING
3585 Cadillac Avenue, Suite A Costa Mesa, CA 92626 * 714-258-8610 * Fax 714-258-0921

Aquaterra Environmental Solution Fairview Heights 13 Executive drive, Suite 1 Fairview Heights, IL 62208 Tom Jacobsmeyer	Work Order: Project: Project Number:	LTK0023 IL31 Cottonwood Hills RDF [none]	Received: 11/02/10 11:15 Reported: 11/09/10 12:32

ANALYTICAL REPORT

Analyte	Result	Data Qualifiers	Units	RL	Dilution	Date Analyzed	Instrument	Analyst	QC Batch
Sample ID: LTK0023-02 (COTTONWOOD 5 - Air)						**Sampled: 10/28/10 14:35**			
ASTM D3588 - Heat of Combustion & Specific Gravity									
Gross Dry Heating Value	520		BTU/ft3	0.16	1.6	11/04/10 22:15	GC8	YZ	10K0050
EPA 25C - Total Nonmethane Organic Compounds									
Total Non-Methane Hydrocarbons as Methane	3600		ppm-C	49	1.6	11/04/10 22:15	GC8	EI	10K0044
EPA 3C - Fixed Gases									
Carbon dioxide	38		%(v/v)	0.016	1.6	11/04/10 22:15	GC8	EI	10K0044
Carbon monoxide	ND		%(v/v)	0.0016	1.6	11/04/10 22:15	GC8	EI	10K0044
Methane	51		%(v/v)	0.00032	1.6	11/04/10 22:15	GC8	EI	10K0044
Nitrogen	10		%(v/v)	1.6	1.6	11/04/10 22:15	GC8	EI	10K0044
Oxygen	0.44		%(v/v)	0.32	1.6	11/04/10 22:15	GC8	EI	10K0044

TestAmerica
THE LEADER IN ENVIRONMENTAL TESTING
3585 Cadillac Avenue, Suite A Costa Mesa, CA 92626 * 714-258-8610 * Fax 714-258-0921

Aquaterra Environmental Solution Fairview Heights 13 Executive drive, Suite 1 Fairview Heights, IL 62208 Tom Jacobsmeyer	Work Order: LTK0023 Project: IL31 Cottonwood Hills RDF Project Number: [none]	Received: 11/02/10 11:15 Reported: 11/09/10 12:32	

ANALYTICAL REPORT

Analyte	Result	Data Qualifiers	Units	RL	Dilution	Date Analyzed	Instrument	Analyst	QC Batch
Sample ID: LTK0023-03 (COTTONWOOD 6 - Air)						**Sampled: 10/28/10 15:25**			
ASTM D3588 - Heat of Combustion & Specific Gravity									
Gross Dry Heating Value	530		BTU/ft3	0.17	1.7	11/04/10 23:08	GC8	YZ	10K0050
EPA 25C - Total Nonmethane Organic Compounds									
Total Non-Methane Hydrocarbons as Methane	3900		ppm-C	50	1.7	11/04/10 23:08	GC8	EI	10K0044
EPA 3C - Fixed Gases									
Carbon dioxide	38		%(v/v)	0.017	1.7	11/04/10 23:08	GC8	EI	10K0044
Carbon monoxide	ND		%(v/v)	0.0017	1.7	11/04/10 23:08	GC8	EI	10K0044
Methane	52		%(v/v)	0.00033	1.7	11/04/10 23:08	GC8	EI	10K0044
Nitrogen	9.7		%(v/v)	1.7	1.7	11/04/10 23:08	GC8	EI	10K0044
Oxygen	ND		%(v/v)	0.33	1.7	11/04/10 23:08	GC8	EI	10K0044

TestAmerica
THE LEADER IN ENVIRONMENTAL TESTING
3585 Cadillac Avenue, Suite A Costa Mesa, CA 92626 * 714-258-8610 * Fax 714-258-0921

Aquaterra Environmental Solution Fairview Heights 13 Executive drive, Suite 1 Fairview Heights, IL 62208 Tom Jacobsmeyer	Work Order: LTK0023 Project: IL31 Cottonwood Hills RDF Project Number: [none]	Received: 11/02/10 11:15 Reported: 11/09/10 12:32	

PROJECT QUALITY CONTROL DATA

Blank

Analyte	Result	Data Qualifier	Units	RL	Dilution	Date Analyzed	Instrument	Analyst	QC Batch
Sample ID: 10K0044-BLK1 (Blank - Air)									
EPA 25C - Total Nonmethane Organic Compounds									
Total Non-Methane Hydrocarbons as Methane	ND		ppm-C	30	1.00	11/04/10 14:10	GC8	EI	10K0044
Sample ID: 10K0044-BLK1 (Blank - Air)									
EPA 3C - Fixed Gases									
Carbon dioxide	ND		%(v/v)	0.010	1.00	11/04/10 14:10	GC8	EI	10K0044
Carbon monoxide	ND		%(v/v)	0.0010	1.00	11/04/10 14:10	GC8	EI	10K0044
Methane	ND		%(v/v)	0.00020	1.00	11/04/10 14:10	GC8	EI	10K0044
Nitrogen	ND		%(v/v)	1.0	1.00	11/04/10 14:10	GC8	EI	10K0044
Oxygen	ND		%(v/v)	0.20	1.00	11/04/10 14:10	GC8	EI	10K0044

TestAmerica
THE LEADER IN ENVIRONMENTAL TESTING
3585 Cadillac Avenue, Suite A Costa Mesa, CA 92626 * 714-258-8610 * Fax 714-258-0921

Aquaterra Environmental Solution Fairview Heights 13 Executive drive, Suite 1 Fairview Heights, IL 62208 Tom Jacobsmeyer	Work Order: Project: Project Number:	LTK0023 IL31 Cottonwood Hills RDF [none]	Received: 11/02/10 11:15 Reported: 11/09/10 12:32

PROJECT QUALITY CONTROL DATA

LCS

Analyte	Result	Data Qualifiers	Units	RL	Dilution	Spike Conc	% Rec	Target Range	Instrument	Date Analyzed	QC Batch
Sample ID: 10K0044-BS2 (LCS - Air)											
EPA 25C - Total Nonmethane Organic Compounds											
Total Non-Methane Hydrocarbons as Meth	121		ppm-C	30	1.00	120	100%	80 - 120	GC8	11/04/10 12:58	10K0044
Sample ID: 10K0044-BS1 (LCS - Air)											
EPA 3C - Fixed Gases											
Carbon dioxide	1.01		%(v/v)	0.010	1.00	0.998	101%	75 - 125	GC8	11/04/10 10:40	10K0044
Carbon monoxide	0.0482		%(v/v)	0.0010	1.00	0.0455	106%	70 - 130	GC8	11/04/10 10:40	10K0044
Methane	0.0575		%(v/v)	0.00020	1.00	0.0500	115%	75 - 135	GC8	11/04/10 10:40	10K0044
Nitrogen	21.4		%(v/v)	1.0	1.00	19.9	107%	70 - 130	GC8	11/04/10 10:40	10K0044
Oxygen	5.36		%(v/v)	0.20	1.00	4.98	108%	70 - 130	GC8	11/04/10 10:40	10K0044

TestAmerica
THE LEADER IN ENVIRONMENTAL TESTING
3585 Cadillac Avenue, Suite A Costa Mesa, CA 92626 * 714-258-8610 * Fax 714-258-0921

Aquaterra Environmental Solution Fairview Heights 13 Executive drive, Suite 1 Fairview Heights, IL 62208 Tom Jacobsmeyer	Work Order: Project: Project Number:	LTK0023 IL31 Cottonwood Hills RDF [none]		Received: Reported:	11/02/10 11:15 11/09/10 12:32

PROJECT QUALITY CONTROL DATA

LCS Dup

Analyte	Result	Data Qualifiers	Units	RL	Dilution	Spike Conc	% Rec	Target Range	RPD	Limit	Date Analyzed	QC Batch
Sample ID: 10K0044-BSD2 (LCS Dup - Air)												
EPA 25C - Total Nonmethane Organic Compounds												
Total Non-Methane Hydrocarbons as Meths	120		ppm-C	30	1.00	120	100%	80 - 120	0.2	20	11/04/10 13:24	10K0044
Sample ID: 10K0044-BSD1 (LCS Dup - Air)												
EPA 3C - Fixed Gases												
Carbon dioxide	1.02		%(v/v)	0.010	1.00	0.998	102%	75 - 125	0.3	20	11/04/10 10:59	10K0044
Carbon monoxide	0.0481		%(v/v)	0.0010	1.00	0.0455	106%	70 - 130	0.2	30	11/04/10 10:59	10K0044
Methane	0.0574		%(v/v)	0.00020	1.00	0.0500	115%	75 - 135	0.2	20	11/04/10 10:59	10K0044
Nitrogen	21.4		%(v/v)	1.0	1.00	19.9	107%	70 - 130	0.01	30	11/04/10 10:59	10K0044
Oxygen	5.35		%(v/v)	0.20	1.00	4.98	107%	70 - 130	0.06	30	11/04/10 10:59	10K0044

3585 Cadillac Avenue, Suite A Costa Mesa, CA 92626 * 714-258-8610 * Fax 714-258-0921

Aquaterra Environmental Solution Fairview Heights 13 Executive drive, Suite 1 Fairview Heights, IL 62208 Tom Jacobsmeyer	Work Order: Project: Project Number:	LTK0023 IL31 Cottonwood Hills RDF [none]	Received: Reported:	11/02/10 11:15 11/09/10 12:32

DATA QUALIFIERS AND DEFINITIONS

ND Not detected at the reporting limit (or method detection limit if shown)

TestAmerica Los Angeles
3585 Cadillac Ave., Suite A
Costa Mesa, CA 92626
Phone 714-258-8610 Fax 714-258-0921

Canister Samples Chain of Custody Record

TestAmerica Laboratories, Inc. assumes no liability with respect to the collection and shipment of these samples.

TestAmerica
THE LEADER IN ENVIRONMENTAL TESTING

Client Contact Information	Project Manager: Tom Jacobsmeyer	LTK0023	1 of 1 COCs
Company: Aqua Terra Environmental	Phone: 618 628 2001	Samples Collected By: Tom Jacobsmeyer	
Address: 13 Executive Dr. Suite 1	Email: tjacobsmeyer@aquaterra-env.com		
City/State/Zip Fairview Heights Ill. 62208	Site Contact:		
Phone: 618 628 2001	LAB Contact: Sonia Tabirara		
FAX: 618 628 2002	Analysis Turnaround Time		
Project Name: Cottonwood RDF Flare Sampling	Standard (Specify) X		
Site: Cottonwood RDF	Rush (Specify)		
PO # 4121.10			

Sample Identification	Sample Date(s)	Time Start	Time Stop	Canister Vacuum in Field, "Hg (Start)	Canister Vacuum in Field, "Hg (Stop)	Flow Controller ID	Canister ID	TO-15	TO-14A	TO-3	EPA 3C	EPA 25C	ASTM D-1946	Other (Please specify in notes section) *	Sample Type	Indoor Air	Ambient Air	Soil Gas	Landfill Gas	Other (Please specify in notes section)
Cottonwood 4	10/28/10	1345	1435	-30	0	HF-039	11715				X	X		X						
Cottonwood 5	10/28/10	1435	1525	-30	0	HF-039	DL-0847				X	X		X						
Cottonwood 6	10/28/10	1525	1615	-30	0	HF-039	DL-106				X	X		X						

Temperature (Fahrenheit)	Interior	Ambient	
Start			
Stop			

Pressure (Inches of Hg)	Interior	Ambient	
Start			
Stop			

* BTU Content ASTM D 3588

Special Instructions/QC Requirements & Comments:

Samples Shipped by:	Date/Time: 10/28/10 5:30pm	Samples Received by:
Samples Relinquished by:	Date/Time: 11/2/10 1115	Received by:
Relinquished by:	Date/Time:	Received by:

Lab Use Only Shipper Name: Opened by: Condition: LTK0023

TestAmerica

CANISTER FIELD DATA RECORD

CLIENT: WMI

CANISTER SERIAL #: 11415

DATE CLEANED: 100610C

CLIENT SAMPLE #:

SITE LOCATION:

VFR ID:

Duration of comp. : Hrs. / mins.

Flow setting: ml/min

Initials:

READING	TIME	Vac. (Inches Hg) Or PRESS. (psig)	DATE	INITIALS
INITIAL VACUUM CHECK		30"	10/14/10	
INITIAL FIELD VACUUM				
FINAL FIELD READING				

LABORATORY CANISTER PRESSURIZATION			
INITIAL VACUUM (Inches Hg / PSIA (circle unit used))	13.88	11/2/10	
FINAL PRESSURE (PSIA)	23.13	11/2/10	

Pressurization Gas: N_2

COMMENTS:

COMPOSITE TIME (HOURS)	FLOW RATE RANGE (ml/min)
15 Min.	316 – 333
30 Min.	158 – 166.7
1	79.2 – 83.3
2	39.6 – 41.7
4	19.8 – 20.8
6	13.2 – 13.9
8	9.9 – 10.4
10	7.92 – 8.3
12	6.6 – 6.9
24	3.5 – 4.0

N:\COMDOCS\TestAmerica DOCs\TestAmerica - CANISTER FIELD DATA RECORD - 20080201.doc

LTK0023

WM00488

2

TestAmerica

CANISTER FIELD DATA RECORD

CLIENT: WMI

CANISTER SERIAL #: DL0842

DATE CLEANED: 100610C

CLIENT SAMPLE #:

SITE LOCATION:

VFR ID:

Duration of comp. : Hrs. / mins.

Flow setting: ml/min

Initials:

READING	TIME	Vac. (Inches Hg) Or PRESS. (osig)	DATE	INITIALS
INITIAL VACUUM CHECK		30"	10/14/10	
INITIAL FIELD VACUUM				
FINAL FIELD READING				

LABORATORY CANISTER PRESSURIZATION			
INITIAL VACUUM (Inches Hg / PSIA (circle unit used))	14.23	11/02/10	
FINAL PRESSURE (PSIA)	23.12	11/2/10	

Pressurization Gas: N_2

COMMENTS:

COMPOSITE TIME (HOURS)	FLOW RATE RANGE (ml/min)
15 Min.	316 – 333
30 Min.	158 – 166.7
1	79.2 – 83.3
2	39.6 – 41.7
4	19.8 – 20.8
6	13.2 – 13.9
8	9.9 – 10.4
10	7.92 – 8.3
12	6.6 – 6.9
24	3.5 – 4.0

N:\COI\DOCS\TestAmerica DOCs\TestAmerica - CANISTER FIELD DATA RECORD - 20080201.doc

3

TestAmerica

CANISTER FIELD DATA RECORD

CLIENT: WMI

CANISTER SERIAL #: DL106

DATE CLEANED: 100610C

CLIENT SAMPLE #:

SITE LOCATION:

VFR ID:

Duration of comp. : Hrs. / mins.

Flow setting: ml/min

Initials:

READING	TIME	Vac. (Inches Hg) Or PRESS. (psig)	DATE	INITIALS
INITIAL VACUUM CHECK		30"	10/14/10	[illegible]
INITIAL FIELD VACUUM				
FINAL FIELD READING				

LABORATORY CANISTER PRESSURIZATION			
INITIAL VACUUM (Inches Hg / PSIA (circle unit used))	13.88	11/2/10	[illegible]
FINAL PRESSURE (PSIA)	23.12	11/2/10	[illegible]

Pressurization Gas: N_2

COMMENTS:

COMPOSITE TIME (HOURS)	FLOW RATE RANGE (ml/min)
15 Min.	316 – 333
30 Min.	158 – 166.7
1	79.2 – 83.3
2	39.6 – 41.7
4	19.8 – 20.8
6	13.2 – 13.9
8	9.9 – 10.4
10	7.92 – 8.3
12	6.6 – 6.9
24	3.5 – 4.0

N:\CONDOCS\TestAmerica DOCs\TestAmerica - CANISTER FIELD DATA RECORD - 20080201.doc

CANISTER QC CERTIFICATION

TestAmerica

THE LEADER IN ENVIRONMENTAL TESTING

Certification Type: TO-15 mL

Date Cleaned/Batch: B100610C

Date of QC: 10-10-10

Data File Number: WB10102 (MSB)

CANISTER ID NUMBERS

✓ * A-249	✓ 93246
✓ 0088	✓ DL106
✓ 12883	✓ 93247
✓ A-277	A-246
✓ DL0842	93015
✓ 11415	9617BB

The above canisters were cleaned as a batch. This certifies this batch contains no target analyte concentration greater than or equal to the method criteria for the "*Certification Type*" indicated above.

"*" INDICATES THE CAN OR CANS WHICH WERE SCREENED.

Reviewed By: [signature]

Date: 10-11-10

LTK0023

WM00491

TestAmerica Los Angeles

AIR TOXICS - TO-14A/TO-15 MEDIUM LEVEL

Data file : \\TAILAX046\MSB_CC\chem\msb.i\101010.B\MB10102.D
Lab Smp Id: BLANK Client Smp ID: A-249
Inj Date : 10-OCT-2010 21:08
Operator : TD Inst ID: MSB,i
Smp Info : BLANK,A-249,,SCREEN BLANK
Misc Info : 1,1,500,500,3,,BLANK,BLANK.SUB,0
Comment :
Method : \\TAILAX046\MSB_CC\chem\msb.i\101010.B\TO14A.m
Meth Date : 10-Oct-2010 20:03 donga Quant Type: ISTD
Cal Date : 09-SEP-2010 04:27 Cal File: IC0908E.D
Als bottle: 3 QC Sample: BLANK
Dil Factor: 1.00000
Integrator: HP RTE Compound Sublist: BLANK.SUB
Subtraction File: \\TAILAX046\MSB_CC
Target Version: 4.04
Processing Host: TAILAX046

Concentration Formula: Amt * DF * (FinalPres / InitPres)*(CalVol / SmpVol)

Name	Value	Description
DF	1.000	Dilution Factor
FinalPres	1.000	FinalPres
InitPres	1.000	InitPres
CalVol	500.000	CalVol
SmpVol	500.000	SmpVol

Compounds	QUANT SIG MASS	RT	EXP RT	REL RT	RESPONSE	CONCENTRATIONS ON-COLUMN (ppbv)	FINAL (ppbv)
* 63 Bromochloromethane	49	11.526	11.616	(1.000)	1165187	50.0000	
$ 72 1,2-Dichloroethane-d4	65	12.582	12.654	(0.943)	1196322	54.3939	54.39
* 80 1,4-Difluorobenzene	114	13.350	13.421	(1.000)	3150787	50.0000	
$ 91 Toluene-d8	100	16.030	16.111	(1.201)	1681304	53.0936	53.09
* 109 Chlorobenzene-d5	117	18.747	18.819	(1.000)	2489342	50.0000	
$ 125 4-Bromofluorobenzene	95	21.031	21.085	(1.122)	2121340	56.9624	56.96

Data File: \\TAILAX046\MSB_CC\chem\msb.i\101010.B\MB10102.D
Date : 10-OCT-2010 21:08
Client ID: A-249
Sample Info: BLANK,A-249,,SCREEN BLANK

Column phase: J&W DB-624

Instrument: MSB.i

Operator: TD
Column diameter: 0.53

LTK0023

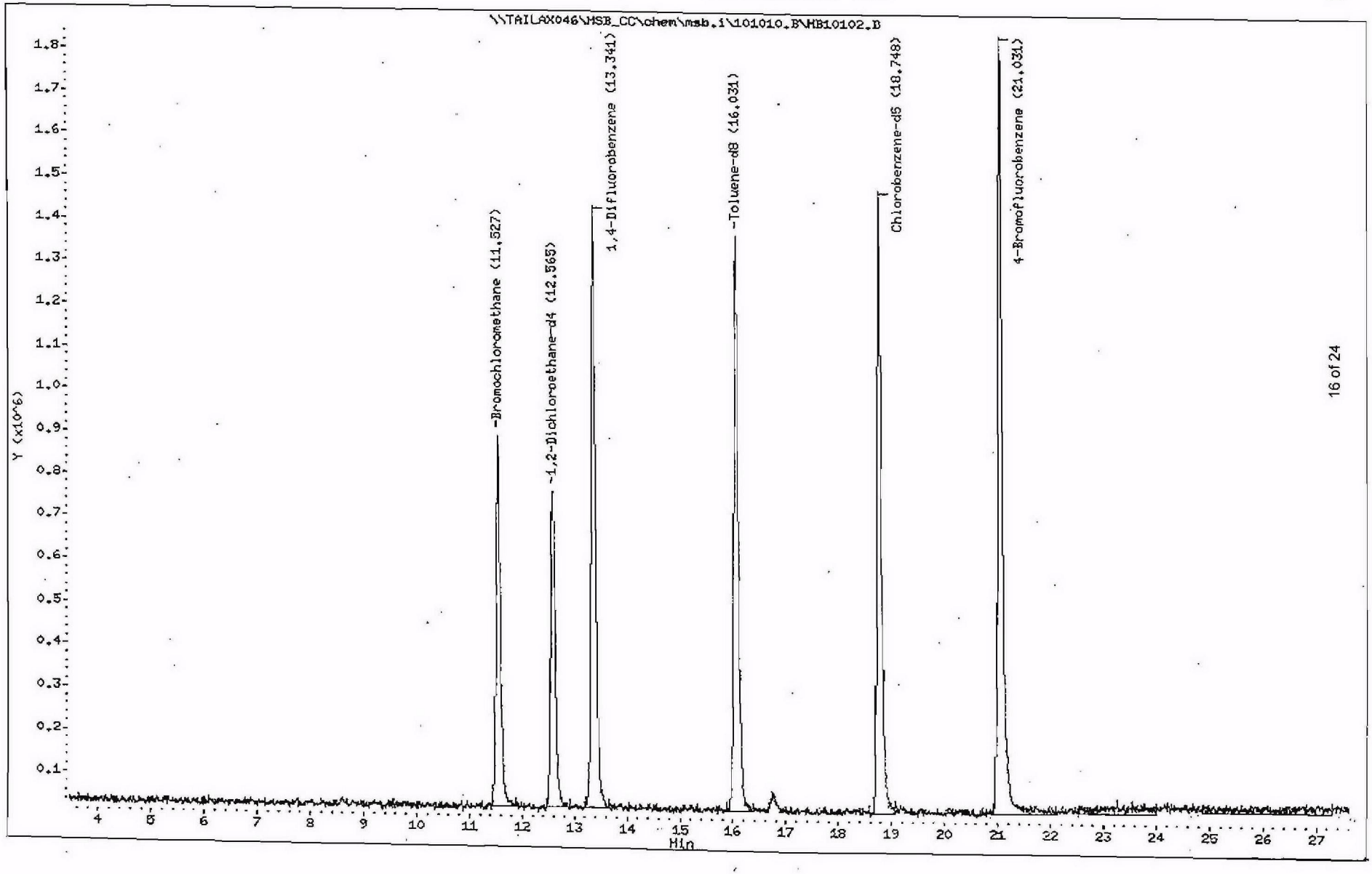

TestAmerica

THE LEADER IN ENVIRONMENTAL TESTING

EPA 25C TRIPLICATE RESULTS

Date Analyzed / QC Batch: 11/04/10 | 10K0044

GC8 EPA 25C TNMOC SUMMARY REPORT

LAB SAMPLE ID#: LTK0023-01

		Date	Time	Dilution Factor
25C RAW DATA FILES Run 1:	k082 :2	11/04/10	20:23	1.6664
Run 2:	k082 :3	11/04/10	20:50	1.6664
Run 3:	k082 :1	11/04/10	21:21	1.6664

EPA 25C DF: 1.6664 Date: 11/4/2010

	Run 1	Run 2	Run 3	Average			
	Results	Results	Results	Results	RSD=10%		BASE RL's
COMPOUND	ppm-c	ppm-c	ppm-c	ppm-c	%RSD	RL	ppm
TNMOC	3327.08	3212.03	3222.59	3253.9015	1.954	50.0	30

	Results	Results	Results	Results	RSD=15%
	%v/v	%v/v	%v/v	%v/v	%RSD
NITROGEN	9.6880	9.6689	9.6319	9.6629	0.295
NO N2 CORRECTION	45.805	45.7935	45.7713		

COMMENTS: CANISTER PRE-PRESSURIZED WITH HELIUM 0

FINAL PRESSURE 23.13

INITIAL PRESSURE 13.88

SERIAL DILUTION 1.00

TNMOC as CH4	RAW AMOUNT	ADJUSTED TNMOC RESULTS
RUN1	2813.834	3327.08
RUN2	2717.316	3212.03
RUN3	2727.760	3222.59

	NMOC	ETHENE	ETHANE
	2813.834	0.000	0.000
	2717.316	0.000	0.000
	2727.760	0.000	0.000

NOTE: TNMOC RESULTS ADJUSTED PER NITROGEN VALUES AND STP

LEVEL 1 [illegible] 11/5/10 LEVEL2 [illegible] 11/09/10

Note: Calculation for Nitrogen last validated by QA on 6-23-2008.

GC8 EPA 25C TNMOC SUMMARY REPORT

LAB SAMPLE ID#: LTK0023-02

		Date	Time	Dilution Factor
25C RAW DATA FILES Run 1:	k083 -2	11/04/10	22:15	1.6247
Run 2:	k083 -3	11/04/10	22:42	1.6247
Run 3:	k083 -1	11/04/10	21:49	1.6247

EPA 25C DF: 1.6247 Date: 11/4/2010

	Run 1	Run 2	Run 3	Average			BASE RL's
	Results	Results	Results	Results	RSD=10%		
COMPOUND	ppm-c	ppm-c	ppm-c	ppm-c	%RSD	RL	ppm
TNMOC	3691.66	3440.77	3560.91	3564.4449	3.520	48.7	30

	Results	Results	Results	Results	RSD=15%
	%v/v	%v/v	%v/v	%v/v	%RSD
NITROGEN	10.3974	10.1935	10.2850	10.2853	1.006
NO N2 CORRECTION	44.851	44.7255	44.7095		

COMMENTS: CANISTER PRE-PRESSURIZED WITH HELIUM 0

FINAL PRESSURE 23.12

INITIAL PRESSURE 14.23

SERIAL DILUTION 1.00

TNMOC as CH4	RAW AMOUNT	ADJUSTED TNMOC RESULTS
RUN1	3088.930	3691.66
RUN2	2887.910	3440.77
RUN3	2985.514	3560.91

	NMOC	ETHENE	ETHANE
	3088.930	0.000	0.000
	2887.910	0.000	0.000
	2985.514	0.000	0.000

NOTE: TNMOC RESULTS ADJUSTED PER NITROGEN VALUES AND STP

LEVEL 1 [illegible] 11/5/10 LEVEL2 [illegible] 11-05-10

Note: Calculation for Nitrogen last validated by QA on 6-23-2008.

GC8 EPA 25C TNMOC SUMMARY REPORT

LAB SAMPLE ID#: LTK0023-03

		Date	Time	Dilution Factor
25C RAW DATA FILES Run 1:	k084-1	11/04/10	23:08	1.6657
Run 2:	k084-2	11/04/10	23:35	1.6657
Run 3:	k084-3	11/05/10	0:02	1.6657

EPA 25C DF: 1.6657 Date: 11/4/2010

	Run 1	Run 2	Run 3	Average			
	Results	Results	Results	Results	RSD=10%		BASE RL's
COMPOUND	ppm-c	ppm-c	ppm-c	ppm-c	%RSD	RL	ppm
TNMOC	3903.71	3904.26	3820.60	3876.1908	1.242	50.0	30

	Results	Results	Results	Results	RSD=15%
	%v/v	%v/v	%v/v	%v/v	%RSD
NITROGEN	9.5768	9.3029	9.6746	9.6848	1.171
NO N2 CORRECTION	45.7148	46.8505	45.7735		

COMMENTS: CANISTER PRE-PRESSURIZED WITH HELIUM 0

FINAL PRESSURE 23.12

INITIAL PRESSURE 13.88

SERIAL DILUTION 1.00

TNMOC as CH4	RAW AMOUNT	ADJUSTED TNMOC RESULTS
RUN1	3307.017	3903.71
RUN2	3296.288	3904.26
RUN3	3231.876	3820.60

NMOC	ETHENE	ETHANE
3307.017	0.000	0.000
3296.288	0.000	0.000
3231.876	0.000	0.000

NOTE: TNMOC RESULTS ADJUSTED PER NITROGEN VALUES AND STP

LEVEL 1 11/5/10 LEVEL2 11/10/10

Note: Calculation for Nitrogen last validated by QA on 6-23-2008.

TestAmerica

THE LEADER IN ENVIRONMENTAL TESTING

EPA 3C DUPLICATE RESULTS

Date Analyzed / QC Batch: 11/04/10/10K0044

LTK0023

WM00498

TESTAMERICA LOS ANGELES

EPA 3C SAMPLE RESULTS SUMMARY CALCULATION

Lot ID: LTK0023-01
Data File(s): k082 -2
Date Acquired: 11/4/2010 20:23 ; 20:50
Dilution Factor: 1.67

Final(F) Lab Pressure: 23.13
Sample(S) Receipt Pressure: 13.88
Prepressurized? (He,NO): NO
Lab Pressurized? (N2,NO): N2
Pre-pressure: 0
Serial Dilution: 1

Analyte	RUN1 PPM(v/v)	RUN2 PPM(v/v)	RPD (10%)	AVERAGE PPM(v/v)	AVERAGE %v/v	RL %v/v	BASE RL %v/v
Carbon Dioxide:	383173.11	383161.45	0.00	383167.28	38.316728	0.01666	0.01
Oxygen/Argon:	3408	3411	0.10	3410	0.340951	0.33329	0.2
Nitrogen:	96880	96689	0.20	96784	9.678433	1.66643	1
Methane:	516582.22	516882.18	0.06	516732.20	51.673220	0.00033	0.0002
Ethene:	0.00	0.00	#DIV/0!	0.00	0.000000	0.00167	0.001
Ethane:	0.00	0.00	#DIV/0!	0.00	0.000000	0.00083	0.0005
Hydrogen	8644	8644	0.00	8643.75	0.864375	0.03333	0.02
Helium	0	0	#DIV/0!	0.00	0.000000	0.03333	0.02
Carbon Monoxide:	0.00	0.00	#DIV/0!	0.00	0.000000	0.00167	0.001
%Total:	100.869	100.879					

	RUN1 PPM(v/v)	RUN2 PPM(v/v)	RUN1 %(v/v)	RUN2 %(v/v)
Nitrogen File Result:	458050	457935	45.805	45.7935

LEVEL 1 11/5/10 **LEVEL2** 11-09-10

Note: Calculation for Nitrogen last validated by QA on 6-23-2008.

TESTAMERICA LOS ANGELES

EPA 3C SAMPLE RESULTS SUMMARY CALCULATION

Lot ID: LTK0023-02
Data File(s): k083 -2
Date Acquired: 11/4/2010 22:15 ; 22:42
Dilution Factor: 1.62

Final(F) Lab Pressure: 23.12
Sample(S) Receipt Pressure: 14.23
Prepressurized? (He,NO): NO
Lab Pressurized? (N2,NO): N2
Pre-pressure: 0
Serial Dilution: 1

Analyte	RUN1 PPM(v/v)	RUN2 PPM(v/v)	RPD (10%)	AVERAGE PPM(v/v)	AVERAGE %v/v	RL %v/v	BASE RL %v/v
Carbon Dioxide:	381574.23	380578.27	0.26	381076.25	38.107625	0.01625	0.01
Oxygen/Argon:	4442	4419	0.51	4431	0.443066	0.32495	0.2
Nitrogen:	103974	101935	1.98	102955	10.295456	1.62474	1
Methane:	514428.94	512680.72	0.34	513554.83	51.355483	0.00032	0.0002
Ethene:	0.00	0.00	#DIV/0!	0.00	0.000000	0.00162	0.001
Ethane:	0.00	0.00	#DIV/0!	0.00	0.000000	0.00081	0.0005
Hydrogen	8535	8535	0.00	8534.74	0.853474	0.03249	0.02
Helium	0	0	#DIV/0!	0.00	0.000000	0.03249	0.02
Carbon Monoxide:	0.00	0.00	#DIV/0!	0.00	0.000000	0.00162	.0.001
%Total:	101.295	100.815					

	RUN1 PPM(v/v)	RUN2 PPM(v/v)	RUN1 %(v/v)	RUN2 %(v/v)
Nitrogen File Result:	448510	447255	44.851	44.7255

LEVEL 1 11/5/10 LEVEL2 11/10/10

Note: Calculation for Nitrogen last validated by QA on 6-23-2008.

TESTAMERICA LOS ANGELES

EPA 3C SAMPLE RESULTS SUMMARY CALCULATION

Lot ID: LTK0023-03
Data File(s): k084 -1
Date Acquired: 11/4/2010 23:08 ; 23:35
Dilution Factor: 1.67

Final(F) Lab Pressure: 23.12
Sample(S) Receipt Pressure: 13.88
Prepressurized? (He,NO): NO
Lab Pressurized? (N2,NO): N2
Pre-pressure: 0
Serial Dilution: 1

Analyte	RUN1 PPM(v/v)	RUN2 PPM(v/v)	RPD (10%)	AVERAGE PPM(v/v)	AVERAGE %v/v	RL %v/v	BASE RL %v/v
Carbon Dioxide:	382985.80	384341.68	0.35	383663.74	38.366374	0.01666	0.01
Oxygen/Argon:	3053	3058	0.16	3056	0.305574	0.33314	0.2
Nitrogen:	95768	98029	2.33	96898	9.689832	1.66571	1
Methane:	517448.25	519122.29	0.32	518285.27	51.828527	0.00033	0.0002
Ethene:	0.00	0.00	#DIV/0!	0.00	0.000000	0.00167	0.001
Ethane:	0.00	0.00	#DIV/0!	0.00	0.000000	0.00083	0.0005
Hydrogen	8605	8605	0.00	8605.04	0.860504	0.03331	0.02
Helium	0	0	#DIV/0!	0.00	0.000000	0.03331	0.02
Carbon Monoxide:	0.00	0.00	#DIV/0!	0.00	0.000000	0.00167	0.001
%Total:	100.786	101.316					

	RUN1 PPM(v/v)	RUN2 PPM(v/v)	RUN1 %(v/v)	RUN2 %(v/v)
Nitrogen File Result:	457148	458505	45.7148	45.8505

LEVEL 1 EI 11/5/10 **LEVEL2** 11.09.10

Note: Calculation for Nitrogen last validated by QA on 6-23-2008.

LABORATORY REPORT

November 12, 2010

Tom Jacobsmeyer
Aquaterra Environmental Solutions, Inc.
13 Executive Dr., Suite 1
Fairview Heights, IL 62208

RE: Cottonwood RDF Flare Sampling

Dear Tom:

Enclosed are the results of the samples submitted to our laboratory on October 29, 2010. For your reference, these analyses have been assigned our service request number P1004041.

All analyses were performed according to our laboratory's NELAP and DoD-ELAP-approved quality assurance program. The test results meet requirements of the current NELAP and DoD-ELAP standards, where applicable, and except as noted in the laboratory case narrative provided. For a specific list of NELAP and DoD-ELAP-accredited analytes, refer to the certifications section at www.caslab.com. Results are intended to be considered in their entirety and apply only to the samples analyzed and reported herein.

Columbia Analytical Services, Inc. is certified by the California Department of Health Services, NELAP Laboratory Certificate No. 02115CA; Arizona Department of Health Services, Certificate No. AZ0694; Florida Department of Health, NELAP Certification E871020; New Jersey Department of Environmental Protection, NELAP Laboratory Certification ID #CA009; New York State Department of Health, NELAP NY Lab ID No: 11221; Oregon Environmental Laboratory Accreditation Program, NELAP ID: CA20007; The American Industrial Hygiene Association, Laboratory #101661; United States Department of Defense Environmental Laboratory Accreditation Program (DoD-ELAP), Certificate No. L10-3; Pennsylvania Registration No. 68-03307; TX Commission of Environmental Quality, NELAP ID T104704413-09-TX; Minnesota Department of Health, Certificate No. 11495AA; Washington State Department of Ecology, ELAP Lab ID: C946. Each of the certifications listed above have an explicit Scope of Accreditation that applies to specific matrices/methods/analytes; therefore, please contact me for information corresponding to a particular certification.

If you have any questions, please call me at (805) 526-7161.

Respectfully submitted,

Columbia Analytical Services, Inc.

Digitally signed by Sue Anderson
Date: 2010.11.12 16:40:00 -08'00'

Sue Anderson
Project Manager

Client: Aquaterra Environmental Solutions, Inc. CAS Project No: P1004041
Project: Cottonwood RDF Flare Sampling

CASE NARRATIVE

The samples were received intact under chain of custody on October 29, 2010 and were stored in accordance with the analytical method requirements. Please refer to the sample acceptance check form for additional information. The results reported herein are applicable only to the condition of the samples at the time of sample receipt.

Sulfur Analysis

The samples were analyzed for twenty sulfur compounds per ASTM D 5504-08 using a gas chromatograph equipped with a sulfur chemiluminescence detector (SCD). All compounds with the exception of hydrogen sulfide and carbonyl sulfide are quantitated against the initial calibration curve for methyl mercaptan.

Sample Cottonwood 5 (P1004041-002) did not complete its full analysis due to an instrument malfunction; therefore, the last three compounds could not be reported for this sample.

The results of analyses are given in the attached laboratory report. All results are intended to be considered in their entirety, and Columbia Analytical Services, Inc. (CAS) is not responsible for utilization of less than the complete report.

DETAIL SUMMARY REPORT

Client: Aquaterra Environmental Solutions, Inc.
Project ID: Cottonwood RDF Flare Sampling
Service Request: P1004041

Date Received: 10/29/10
Time Received: 09:40

Client Sample ID	Lab Code	Matrix	Date Collected	Time Collected	ASTM D5504-08 - Sulfur Bag
Cottonwood 4	P1004041-001	Air	10/28/10	16:20	X
Cottonwood 5	P1004041-002	Air	10/28/10	16:22	X
Cottonwood 6	P1004041-003	Air	10/28/10	16:24	X

TestAmerica Los Angeles
3585 Cadillac Ave., Suite A
Costa Mesa, CA 92626
Phone 714-258-8610 Fax 714-258-0921

Canister Samples Chain of Custody Record

TestAmerica
THE LEADER IN ENVIRONMENTAL TESTING

TestAmerica Laboratories, Inc. assumes no liability with respect to the collection and shipment of these samples.

P1004041

Client Contact Information	Project Manager: Tom Jacobsmeyer		1 of 1 COCs
Company: Aquaterra Environmental	Phone: 618 628 2001	Samples Collected By: tom Jacobsmeyer	
Address: 13 Executive Dr. Suite 1	Email: tacobsmeyer@aquaterra-env.com		
City/State/Zip Fairview Heights Ill.			
Phone: 618 628 2001 62208	Site Contact:		
FAX: 618 628 2002	LAB Contact: Sonia Tabirara		
Project Name: Cottonwood RDF Flare Sampling	Analysis Turnaround Time		
Site: Cottonwood RDF	Standard (Specify) X		
PO # 4121.10	Rush (Specify)		

Sample Identification	Sample Date(s)	Time Start	Time Stop	Canister Vacuum In Field, "Hg (Start)	Canister Vacuum In Field, "Hg (Stop)	Flow Controller ID	Canister ID	TO-15	TO-14A	TO-3	EPA 3C	EPA 25C	ASTM D-1946	Other (Please specify in notes section) *	Sample Type	Indoor Air	Ambient Air	Soil Gas	Landfill Gas	Other (Please specify in notes section)
Cottonwood 4	10/28/10	1345	1435	-30	0	HF-039	11415				X	X		X						
Cottonwood 5	10/28/10	1435	1525	-30	0	HF-039	DL-0842				X	X		X						
Cottonwood 6	10/28/10	1525	1615	-30	0	HF-039	DL-106				X	X		X						

Temperature (Fahrenheit)	Interior	Ambient	
Start			
Stop			

Pressure (Inches of Hg)	Interior	Ambient	
Start			
Stop			

* BTU Content ASTM D 3588

Special Instructions/QC Requirements & Comments:

Samples Shipped by: [signature]	Date/Time: 10/28/10 5:30pm	Samples Received by: [signature] 10/29/10 0946
Samples Relinquished by:	Date/Time:	Received by:
Relinquished by:	Date/Time:	Received by:

Lab Use Only Shipper Name: Opened by: Condition:

Columbia Analytical Services

2655 Park Center Drive, Suite A
Simi Valley, California 93065
Phone (805) 526-7161
Fax (805) 526-7270

Air - Chain of Custody Record & Analytical Service Request

Requested Turnaround Time in Business Days (Surcharges) please circle
1 Day (100%) 2 Day (75%) 3 Day (50%) 4 Day (35%) 5 Day (25%) 10 Day-Standard

CAS Project No.

CAS Contact:

Company Name & Address (Reporting Information): Aquaterra Environmental, 13 Executive Dr. Suite 1, Fairview Heights Il. 62208

Project Name: Cottonwood RDF Flare Sampling

Project Number: 4121.10

Project Manager: Tom Jacobsmeyer

P.O. # / Billing Information

Phone: 618 628 2001

Fax: 618 628 2002

Email Address for Result Reporting: tjacobsmeyer@aquaterra-env.com

Sampler (Print & Sign): Tom Jacobsmeyer

Analysis Method/Analytes

Client Sample ID	Laboratory ID Number	Date Collected	Time Collected	Sample Type (Air/Tube/Solid)	Canister ID (Bar code # - AC, SC, etc.)	Flow Controller (Bar code - FC #)	Sample Volume	ASTM D 5504 Total Sulfur Compounds			Comments e.g. Actual Preservative or specific instructions
Cottonwood 4		10/28/10	1620	AIR	–	–	.5L	X			
Cottonwood 5		10/28/10	1622	AIR	–	–	.5L	X			
Cottonwood 6		10/28/10	1624	AIR	–	–	.5L	X			

Report Tier Levels - please select
Tier I - (Results/Default if not specified) ____
Tier II (Results + QC) ____
Tier III (Data Validation Package) 10% Surcharge ____
Tier V (client specified) ____

EDD required Yes / No
Type: ____ EDD Units: ____

Project Requirements (MRLs, QAPP)

Relinquished by: (Signature)	Date:	Time:	Received by: (Signature)	Date:	Time:
	10/28/10	5:30pm		11/2/10	1115
Relinquished by: (Signature)	Date:	Time:	Received by: (Signature)	Date:	Time:
Relinquished by: (Signature)	Date:	Time:	Received by: (Signature)	Date:	Time:

Cooler / Blank Temperature ____ °C

Columbia Analytical Services™ 2655 Park Center Drive, Suite A, Simi Valley, CA 93065 | 805.526.7161 | www.caslab.com

Sample Acceptance Check Form

Client: Aquaterra Environmental Solutions, Inc. Work order: P1004041

Project: Cottonwood RDF Flare Sampling

Sample(s) received on: 10/29/10 Date opened: 10/29/10 by: SSTAPLES

Note: This form is used forall samples received by CAS. The use of this form for custody seals is strictly meant to indicate presence/absence and not as an indication of compliance or nonconformity. Thermal preservation and pH will only be evaluated either at the request of the client and/or as required by the method/SOP.

		Yes	No	N/A
1	Were **sample containers** properly marked with client sample ID?	☒	☐	☐
2	Container(s) **supplied by CAS**?	☐	☒	☐
3	Did **sample containers** arrive in good condition?	☒	☐	☐
4	Was a **chain-of-custody** provided?	☒	☐	☐
5	Was the **chain-of-custody** properly completed?	☒	☐	☐
6	Did **sample container labels** and/or tags agree with custody papers?	☒	☐	☐
7	Was **sample volume** received adequate for analysis?	☒	☐	☐
8	Are samples within specified holding times?	☒	☐	☐
9	Was proper **temperature** (thermal preservation) of cooler at receipt adhered to?	☐	☐	☒
	Cooler Temperature _____ °C Blank Temperature _____ °C			
10	Was a **trip blank** received?	☐	☒	☐
	Trip blank supplied by CAS: _____			
11	Were **custody seals** on outside of cooler/Box?	☐	☒	☐
	Location of seal(s)? _____ Sealing Lid?	☐	☐	☒
	Were signature and date included?	☐	☐	☒
	Were seals intact?	☐	☐	☒
	Were custody seals on outside of sample container?	☐	☒	☐
	Location of seal(s)? _____ Sealing Lid?	☐	☐	☒
	Were signature and date included?	☐	☐	☒
	Were seals intact?	☐	☐	☒
12	Do containers have appropriate **preservation**, according to method/SOP or Client specified information?	☐	☐	☒
	Is there a client indication that the submitted samples are **pH** preserved?	☐	☐	☒
	Were **VOA vials** checked for presence/absence of air bubbles?	☐	☐	☒
	Does the client/method/SOP require that the analyst check the sample pH and if necessary alter it?	☐	☐	☒
13	**Tubes:** Are the tubes capped and intact?	☐	☐	☒
	Do they contain moisture?	☐	☐	☒
14	**Badges:** Are the badges properly capped and intact?	☐	☐	☒
	Are dual bed badges separated and individually capped and intact?	☐	☐	☒

Lab Sample ID	Container Description	Required pH *	Received pH	Adjusted pH	VOA Headspace (Presence/Absence)	Receipt / Preservation Comments
P1004041-001.02	1.0 L Tedlar Bag					
P1004041-002.02	1.0 L Tedlar Bag					
P1004041-003.02	1.0 L Tedlar Bag					

Explain any discrepancies: (include lab sample ID numbers): _____

*Required pH: Phenols/COD/NH3/TOC/TOX/NO3+NO2/TKN/T.PHOS, H2SO4 (pH<2); Metals, HNO3 (pH<2); CN (NaOH or NaOH/Asc Acid) (pH>12); Diss. Sulfide, NaOH (pH>12); T. Sulfide, NaOH/ZnAc (pH>12) RSK - MEEPP, HCL (pH<2); RSK - CO2, (pH 5-8); Sulfur (pH>4)

WM00507

Columbia Analytical Services™ 2655 Park Center Drive, Suite A, Simi Valley, CA 93065 805.526.7161 www.caslab.com

RESULTS OF ANALYSIS

Client: **Aquaterra Environmental Solutions, Inc.**
Client Sample ID: **Cottonwood 4**
Client Project ID: **Cottonwood RDF Flare Sampling**

CAS Project ID: P1004041
CAS Sample ID: P1004041-001

Test Code: ASTM D 5504-08
Instrument ID: Agilent 6890A/GC13/SCD
Analyst: Zheng Wang
Sampling Media: 1.0 L Tedlar Bag
Test Notes:

Date Collected: 10/28/10
Time Collected: 16:20
Date Received: 10/29/10
Date Analyzed: 10/29/10
Time Analyzed: 10:46
Volume(s) Analyzed: 0.10 ml(s)

CAS #	Compound	Result µg/m³	MRL µg/m³	Result ppbV	MRL ppbV	Data Qualifier
7783-06-4	Hydrogen Sulfide	**28,000**	70	**20,000**	50	
463-58-1	Carbonyl Sulfide	**210**	120	**86**	50	
74-93-1	Methyl Mercaptan	**6,600**	98	**3,400**	50	
75-08-1	Ethyl Mercaptan	**140**	130	**55**	50	
75-18-3	Dimethyl Sulfide	**30,000**	130	**12,000**	50	
75-15-0	Carbon Disulfide	**120**	78	**38**	25	
75-33-2	Isopropyl Mercaptan	**530**	160	**170**	50	
75-66-1	tert-Butyl Mercaptan	**1,200**	180	**330**	50	
107-03-9	n-Propyl Mercaptan	ND	160	ND	50	
624-89-5	Ethyl Methyl Sulfide	**230**	160	**73**	50	
110-02-1	Thiophene	**740**	170	**210**	50	
513-44-0	Isobutyl Mercaptan	**340**	180	**91**	50	
352-93-2	Diethyl Sulfide	ND	180	ND	50	
109-79-5	n-Butyl Mercaptan	ND	180	ND	50	
624-92-0	Dimethyl Disulfide	**1,000**	96	**260**	25	
616-44-4	3-Methylthiophene	ND	200	ND	50	
110-01-0	Tetrahydrothiophene	ND	180	ND	50	
638-02-8	2,5-Dimethylthiophene	ND	230	ND	50	
872-55-9	2-Ethylthiophene	ND	230	ND	50	
110-81-6	Diethyl Disulfide	ND	120	ND	25	

ND = Compound was analyzed for, but not detected above the laboratory reporting limit.
MRL = Method Reporting Limit - The minimum quantity of a target analyte that can be confidently determined by the referenced method.

Columbia Analytical Services™ 2655 Park Center Drive, Suite A, Simi Valley, CA 93065 ; 805.526.7161 | www.caslab.com

RESULTS OF ANALYSIS

Client: **Aquaterra Environmental Solutions, Inc.**
Client Sample ID: **Cottonwood 5**
Client Project ID: **Cottonwood RDF Flare Sampling**

CAS Project ID: P1004041
CAS Sample ID: P1004041-002

Test Code: ASTM D 5504-08
Instrument ID: Agilent 6890A/GC13/SCD
Analyst: Zheng Wang
Sampling Media: 1.0 L Tedlar Bag
Test Notes:

Date Collected: 10/28/10
Time Collected: 16:22
Date Received: 10/29/10
Date Analyzed: 10/29/10
Time Analyzed: 11:04
Volume(s) Analyzed: 0.10 ml(s)

CAS #	Compound	Result µg/m³	MRL µg/m³	Result ppbV	MRL ppbV	Data Qualifier
7783-06-4	Hydrogen Sulfide	**33,000**	70	**24,000**	50	
463-58-1	Carbonyl Sulfide	**250**	120	**100**	50	
74-93-1	Methyl Mercaptan	**7,600**	98	**3,900**	50	
75-08-1	Ethyl Mercaptan	**200**	130	**79**	50	
75-18-3	Dimethyl Sulfide	**31,000**	130	**12,000**	50	
75-15-0	Carbon Disulfide	**140**	78	**44**	25	
75-33-2	Isopropyl Mercaptan	**630**	160	**200**	50	
75-66-1	tert-Butyl Mercaptan	**1,300**	180	**340**	50	
107-03-9	n-Propyl Mercaptan	ND	160	ND	50	
624-89-5	Ethyl Methyl Sulfide	**210**	160	**69**	50	
110-02-1	Thiophene	**740**	170	**220**	50	
513-44-0	Isobutyl Mercaptan	**250**	180	**67**	50	
352-93-2	Diethyl Sulfide	ND	180	ND	50	
109-79-5	n-Butyl Mercaptan	ND	180	ND	50	
624-92-0	Dimethyl Disulfide	**590**	96	**150**	25	
616-44-4	3-Methylthiophene	**210**	200	**53**	50	
110-01-0	Tetrahydrothiophene	ND	180	ND	50	

ND = Compound was analyzed for, but not detected above the laboratory reporting limit.
MRL = Method Reporting Limit - The minimum quantity of a target analyte that can be confidently determined by the referenced method.

Columbia Analytical Services™ 2655 Park Center Drive, Suite A, Simi Valley, CA 93065 805.526.7161 | www.caslab.com

RESULTS OF ANALYSIS

Client: **Aquaterra Environmental Solutions, Inc.**
Client Sample ID: **Cottonwood 6**
Client Project ID: **Cottonwood RDF Flare Sampling**

CAS Project ID: P1004041
CAS Sample ID: P1004041-003

Test Code: ASTM D 5504-08
Instrument ID: Agilent 6890A/GC13/SCD
Analyst: Zheng Wang
Sampling Media: 1.0 L Tedlar Bag
Test Notes:

Date Collected: 10/28/10
Time Collected: 16:24
Date Received: 10/29/10
Date Analyzed: 10/29/10
Time Analyzed: 11:28
Volume(s) Analyzed: 0.10 ml(s)

CAS #	Compound	Result µg/m³	MRL µg/m³	Result ppbV	MRL ppbV	Data Qualifier
7783-06-4	Hydrogen Sulfide	**33,000**	70	**23,000**	50	
463-58-1	Carbonyl Sulfide	**200**	120	**81**	50	
74-93-1	Methyl Mercaptan	**7,400**	98	**3,800**	50	
75-08-1	Ethyl Mercaptan	**200**	130	**77**	50	
75-18-3	Dimethyl Sulfide	**30,000**	130	**12,000**	50	
75-15-0	Carbon Disulfide	**130**	78	**41**	25	
75-33-2	Isopropyl Mercaptan	**620**	160	**200**	50	
75-66-1	tert-Butyl Mercaptan	**1,400**	180	**370**	50	
107-03-9	n-Propyl Mercaptan	ND	160	ND	50	
624-89-5	Ethyl Methyl Sulfide	**230**	160	**75**	50	
110-02-1	Thiophene	**720**	170	**210**	50	
513-44-0	Isobutyl Mercaptan	**250**	180	**69**	50	
352-93-2	Diethyl Sulfide	ND	180	ND	50	
109-79-5	n-Butyl Mercaptan	ND	180	ND	50	
624-92-0	Dimethyl Disulfide	**490**	96	**130**	25	
616-44-4	3-Methylthiophene	**740**	200	**180**	50	
110-01-0	Tetrahydrothiophene	ND	180	ND	50	
638-02-8	2,5-Dimethylthiophene	ND	230	ND	50	
872-55-9	2-Ethylthiophene	ND	230	ND	50	
110-81-6	Diethyl Disulfide	ND	120	ND	25	

ND = Compound was analyzed for, but not detected above the laboratory reporting limit.
MRL = Method Reporting Limit - The minimum quantity of a target analyte that can be confidently determined by the referenced method.

Columbia Analytical Services 2655 Park Center Drive, Suite A, Simi Valley, CA 93065 805.526.7161 | www.caslab.com

RESULTS OF ANALYSIS

Client: **Aquaterra Environmental Solutions, Inc.**
Client Sample ID: **Method Blank**
Client Project ID: **Cottonwood RDF Flare Sampling**

CAS Project ID: P1004041
CAS Sample ID: P101029-MB

Test Code: ASTM D 5504-08
Instrument ID: Agilent 6890A/GC13/SCD
Analyst: Zheng Wang
Sampling Media: 1.0 L Tedlar Bag
Test Notes:

Date Collected: NA
Time Collected: NA
Date Received: NA
Date Analyzed: 10/29/10
Time Analyzed: 09:27
Volume(s) Analyzed: 1.0 ml(s)

CAS #	Compound	Result µg/m³	MRL µg/m³	Result ppbV	MRL ppbV	Data Qualifier
7783-06-4	Hydrogen Sulfide	ND	7.0	ND	5.0	
463-58-1	Carbonyl Sulfide	ND	12	ND	5.0	
74-93-1	Methyl Mercaptan	ND	9.8	ND	5.0	
75-08-1	Ethyl Mercaptan	ND	13	ND	5.0	
75-18-3	Dimethyl Sulfide	ND	13	ND	5.0	
75-15-0	Carbon Disulfide	ND	7.8	ND	2.5	
75-33-2	Isopropyl Mercaptan	ND	16	ND	5.0	
75-66-1	tert-Butyl Mercaptan	ND	18	ND	5.0	
107-03-9	n-Propyl Mercaptan	ND	16	ND	5.0	
624-89-5	Ethyl Methyl Sulfide	ND	16	ND	5.0	
110-02-1	Thiophene	ND	17	ND	5.0	
513-44-0	Isobutyl Mercaptan	ND	18	ND	5.0	
352-93-2	Diethyl Sulfide	ND	18	ND	5.0	
109-79-5	n-Butyl Mercaptan	ND	18	ND	5.0	
624-92-0	Dimethyl Disulfide	ND	9.6	ND	2.5	
616-44-4	3-Methylthiophene	ND	20	ND	5.0	
110-01-0	Tetrahydrothiophene	ND	18	ND	5.0	
638-02-8	2,5-Dimethylthiophene	ND	23	ND	5.0	
872-55-9	2-Ethylthiophene	ND	23	ND	5.0	
110-81-6	Diethyl Disulfide	ND	12	ND	2.5	

ND = Compound was analyzed for, but not detected above the laboratory reporting limit.
MRL = Method Reporting Limit - The minimum quantity of a target analyte that can be confidently determined by the referenced method.

LABORATORY CONTROL SAMPLE SUMMARY

Client: **Aquaterra Environmental Solutions, Inc.**
Client Sample ID: **Lab Control Sample** CAS Project ID: P1004041
Client Project ID: **Cottonwood RDF Flare Sampling** CAS Sample ID: P101029-LCS

Test Code: ASTM D 5504-08 Date Collected: NA
Instrument ID: Agilent 6890A/GC13/SCD Date Received: NA
Analyst: Zheng Wang Date Analyzed: 10/29/10
Sampling Media: 1.0 L Tedlar Bag Volume(s) Analyzed: NA ml(s)
Test Notes:

CAS #	Compound	Spike Amount ppbV	Result ppbV	% Recovery	CAS Acceptance Limits	Data Qualifier
7783-06-4	Hydrogen Sulfide	1,920	**2,260**	**118**	71-129	
463-58-1	Carbonyl Sulfide	1,920	**2,000**	**104**	66-120	
74-93-1	Methyl Mercaptan	1,820	**1,550**	**85**	59-136	

APPENDIX D

CALCULATIONS

Included in this Appendix:

- Net Heating Value
- Actual Exit Velocity
- Maximum Permitted Exit Velocity
- Sulfur Compound Concentrations

NET HEATING VALUE

AQUATERRA ENVIRONMENTAL SOLUTIONS, INC.

LANDFILL GAS FLARE TESTING LOG
NET HEATING VALUE CALCULATIONS

Waste Management, Inc.
Cottonwood Hills Recycling and Disposal Facility
Marissa, Illinois

Input

Sample No.	Cottonwood 1		
Percent Methane:		50	Percent
Net heat of combustion of methane*		802	KJ/g mole

Net Heating Value calculated using the following equation:

$HT = K \sum CiHi$

where:
H (T): Net Heating Value in (MJ/scm) at 25 deg. C, 760 mm Hg
K: 1.740×10^{-7} (1/ppm)(g mole/scm)(MJ/kcal)
where (g mole/scm) is at 20 deg. C
Ci: concentration of component sample component *i* in ppm
Hi: net heat of combustion for sample component *i*
in (kcal/g mole) at 25 deg. C, 760 mm Hg

Convert Heat of Combustion from Btu/scf to kcal/g mole

A) KJ/mol to J/mol

(802 kJ/g mole)*(1000 J/1 kJ) = 802,000 J/g mole

B) J/mole to cal/mole

(802,000 J/g mole)*(1 cal/4.184 J)= 191,682.6 cal/g mole

C) cal/mole to Kcal/mole

(191,682 cal/g mole)*(1 Kcal/1000 cal)= 191.7 kcal/g mole

Now calculate Net Heating Value

$HT = K \sum CiHi$

H (T) = 1.740 x 10-7 (1/ppm)(g mole/scm)(MJ/kcal) x 500000 ppm x 191.7 kcal/g-mole

H (T) = 16.68 MJ/scm

* Value from *Chemistry: The Central Science 2nd Edition*, by Theodore L. Brown and H. Eugene LeMay, Jr.

AQUATERRA ENVIRONMENTAL SOLUTIONS, INC.

LANDFILL GAS FLARE TESTING LOG
NET HEATING VALUE CALCULATIONS

Waste Management, Inc.
Cottonwood Hills Recycling and Disposal Facility
Marissa, Illinois

Input

Sample No.	Cottonwood 2		
Percent Methane:		51	Percent
Net heat of combustion of methane*		802	KJ/g mole

Net Heating Value calculated using the following equation:

$HT = K \sum CiHi$

where:
H (T): Net Heating Value in (MJ/scm) at 25 deg. C, 760 mm Hg
K: 1.740×10^{-7} (1/ppm)(g mole/scm)(MJ/kcal)
where (g mole/scm) is at 20 deg. C
C*i*: concentration of component sample component *i* in ppm
H*i*: net heat of combustion for sample component *i*
in (kcal/g mole) at 25 deg. C, 760 mm Hg

Convert Heat of Combustion from Btu/scf to kcal/g mole

A) KJ/mol to J/mol

(802 kJ/g mole)*(1000 J/1 kJ) = 802,000 J/g mole

B) J/mole to cal/mole

(802,000 J/g mole)*(1 cal/4.184 J)= 191,682.6 cal/g mole

C) cal/mole to Kcal/mole

(191,682 cal/g mole)*(1 Kcal/1000 cal)= 191.7 kcal/g mole

Now calculate Net Heating Value

$HT = K \sum CiHi$

H (T) = 1.740 x 10-7 (1/ppm)(g mole/scm)(MJ/kcal) x 510000 ppm x 191.7 kcal/g-mole

H (T) = 17.01 MJ/scm

* Value from *Chemistry: The Central Science 2nd Edition*, by Theodore L. Brown and H. Eugene LeMay, Jr.

AQUATERRA ENVIRONMENTAL SOLUTIONS, INC.
LANDFILL GAS FLARE TESTING LOG
NET HEATING VALUE CALCULATIONS

Waste Management, Inc.
Cottonwood Hills Recycling and Disposal Facility
Marissa, Illinois

Input

Sample No.	**Cottonwood 3**		
Percent Methane:		52	Percent
Net heat of combustion of methane*		802	KJ/g mole

Net Heating Value calculated using the following equation:

$HT = K \sum CiHi$

where:
H (T): Net Heating Value in (MJ/scm) at 25 deg. C, 760 mm Hg
K: 1.740×10^{-7} (1/ppm)(g mole/scm)(MJ/kcal)
where (g mole/scm) is at 20 deg. C
C*i*: concentration of component sample component *i* in ppm
H*i*: net heat of combustion for sample component *i*
in (kcal/g mole) at 25 deg. C, 760 mm Hg

Convert Heat of Combustion from Btu/scf to kcal/g mole

A) KJ/mol to J/mol

(802 kJ/g mole)*(1000 J/1 kJ) = 802,000 J/g mole

B) J/mole to cal/mole

(802,000 J/g mole)*(1 cal/4.184 J)= 191,682.6 cal/g mole

C) cal/mole to Kcal/mole

(191,682 cal/g mole)*(1 Kcal/1000 cal)= 191.7 kcal/g mole

Now calculate Net Heating Value

$HT = K \sum CiHi$

H (T) = 1.740 x 10-7 (1/ppm)(g mole/scm)(MJ/kcal) x 520000 ppm x 191.7 kcal/g-mole

H (T) = 17.35 MJ/scm

* Value from *Chemistry: The Central Science 2nd Edition*, by Theodore L. Brown and H. Eugene LeMay, Jr.

AQUATERRA ENVIRONMENTAL SOLUTIONS, INC.
LANDFILL GAS FLARE TESTING LOG
NET HEATING VALUE CALCULATIONS

Waste Management, Inc.
Cottonwood Hills Recycling and Disposal Facility
Marissa, Illinois

Input

Sample No.	**Cottonwood 4**		
Percent Methane:		52	Percent
Net heat of combustion of methane*		802	KJ/g mole

Net Heating Value calculated using the following equation:

$HT = K \sum CiHi$

where:
H (T): Net Heating Value in (MJ/scm) at 25 deg. C, 760 mm Hg
K: 1.740×10^{-7} (1/ppm)(g mole/scm)(MJ/kcal)
where (g mole/scm) is at 20 deg. C
C*i*: concentration of component sample component *i* in ppm
H*i*: net heat of combustion for sample component *i*
in (kcal/g mole) at 25 deg. C, 760 mm Hg

Convert Heat of Combustion from Btu/scf to kcal/g mole

A) KJ/mol to J/mol

(802 kJ/g mole)*(1000 J/1 kJ) = 802,000 J/g mole

B) J/mole to cal/mole

(802,000 J/g mole)*(1 cal/4.184 J)= 191,682.6 cal/g mole

C) cal/mole to Kcal/mole

(191,682 cal/g mole)*(1 Kcal/1000 cal)= 191.7 kcal/g mole

Now calculate Net Heating Value

$HT = K \sum CiHi$

H (T) = 1.740 x 10-7 (1/ppm)(g mole/scm)(MJ/kcal) x 520000 ppm x 191.7 kcal/g-mole

H (T) = 17.35 MJ/scm

* Value from *Chemistry: The Central Science 2nd Edition*, by Theodore L. Brown and H. Eugene LeMay, Jr.

AQUATERRA ENVIRONMENTAL SOLUTIONS, INC.
LANDFILL GAS FLARE TESTING LOG
NET HEATING VALUE CALCULATIONS

Waste Management, Inc.
Cottonwood Hills Recycling and Disposal Facility
Marissa, Illinois

Input

Sample No.	**Cottonwood 5**		
Percent Methane:		51	Percent
Net heat of combustion of methane*		802	KJ/g mole

Net Heating Value calculated using the following equation:

$HT = K \sum CiHi$

where:
H (T): Net Heating Value in (MJ/scm) at 25 deg. C, 760 mm Hg
K: 1.740×10^{-7} (1/ppm)(g mole/scm)(MJ/kcal)
where (g mole/scm) is at 20 deg. C
C*i*: concentration of component sample component *i* in ppm
H*i*: net heat of combustion for sample component *i*
in (kcal/g mole) at 25 deg. C, 760 mm Hg

Convert Heat of Combustion from Btu/scf to kcal/g mole

A) KJ/mol to J/mol

(802 kJ/g mole)*(1000 J/1 kJ) = 802,000 J/g mole

B) J/mole to cal/mole

(802,000 J/g mole)*(1 cal/4.184 J)= 191,682.6 cal/g mole

C) cal/mole to Kcal/mole

(191,682 cal/g mole)*(1 Kcal/1000 cal)= 191.7 kcal/g mole

Now calculate Net Heating Value

$HT = K \sum CiHi$

H (T) = 1.740 x 10-7 (1/ppm)(g mole/scm)(MJ/kcal) x 510000 ppm x 191.7 kcal/g-mole

H (T) = 17.01 MJ/scm

* Value from *Chemistry: The Central Science 2nd Edition*, by Theodore L. Brown and H. Eugene LeMay, Jr.

AQUATERRA ENVIRONMENTAL SOLUTIONS, INC.

LANDFILL GAS FLARE TESTING LOG
NET HEATING VALUE CALCULATIONS

Waste Management, Inc.
Cottonwood Hills Recycling and Disposal Facility
Marissa, Illinois

Input

Sample No.	**Cottonwood 6**		
Percent Methane:		52	Percent
Net heat of combustion of methane*		802	KJ/g mole

Net Heating Value calculated using the following equation:

$HT = K \sum CiHi$

where:
H (T): Net Heating Value in (MJ/scm) at 25 deg. C, 760 mm Hg
K: 1.740×10^{-7} (1/ppm)(g mole/scm)(MJ/kcal)
where (g mole/scm) is at 20 deg. C
Ci: concentration of component sample component *i* in ppm
Hi: net heat of combustion for sample component *i*
in (kcal/g mole) at 25 deg. C, 760 mm Hg

Convert Heat of Combustion from Btu/scf to kcal/g mole

A) KJ/mol to J/mol

(802 kJ/g mole)*(1000 J/1 kJ) = 802,000 J/g mole

B) J/mole to cal/mole

(802,000 J/g mole)*(1 cal/4.184 J)= 191,682.6 cal/g mole

C) cal/mole to Kcal/mole

(191,682 cal/g mole)*(1 Kcal/1000 cal)= 191.7 kcal/g mole

Now calculate Net Heating Value

$HT = K \sum CiHi$

H (T) = 1.740 x 10-7 (1/ppm)(g mole/scm)(MJ/kcal) x 520000 ppm x 191.7 kcal/g-mole

H (T) = 17.35 MJ/scm

* Value from *Chemistry: The Central Science 2nd Edition*, by Theodore L. Brown and H. Eugene LeMay, Jr.

ACTUAL EXIT VELOCITY

AQUATERRA ENVIRONMENTAL SOLUTIONS, INC.

LANDFILL GAS FLARE TESTING LOG
EXIT VELOCITY DETERMINATION

Waste Management, Inc.
Cottonwood Hills Recycling and Disposal Facility
Marissa, Illinois

Sample No. **Cottonwood 1**
Flare Tip Diameter (in) 10

Date	Time	Flow Rate Reading (SCFM)	Static Pressure (in H20)	Temperature (°F)
6/24/2010	12:57	608	2.00	126

Flare Tip Cross Sectional Area (ft2)

Area = $(\Pi/4) \times (D^2)$
Area = (3.14159/4) x (10/12)^2
Area = 0.55 ft^2

Velocity (ft/min)

Velocity = Q/A
Velocity = 608 / 0.55
Velocity = 1105.45 ft/min

Convert to m/sec

Velocity = (1105.45 ft/min) x (1 min/60 sec) x (1 m/3.281 ft)
Velocity = **5.62** m/sec

AQUATERRA ENVIRONMENTAL SOLUTIONS, INC.

LANDFILL GAS FLARE TESTING LOG
EXIT VELOCITY DETERMINATION

Waste Management, Inc.
Cottonwood Hills Recycling and Disposal Facility
Marissa, Illinois

Sample No. **Cottonwood 2**
Flare Tip Diameter (in) 10

Date	Time	Flow Rate Reading (SCFM)	Static Pressure (in H20)	Temperature (°F)
6/24/2010	13:54	608	2.00	127

Flare Tip Cross Sectional Area (ft2)

Area = $(\pi/4) \times (D^2)$
Area = (3.14159/4) x (10/12)^2
Area = 0.55 ft^2

Velocity (ft/min)

Velocity = Q/A
Velocity = 608 / 0.55
Velocity = 1105.45 ft/min

Convert to m/sec

Velocity = (1105.45 ft/min) x (1 min/60 sec) x (1 m/3.281 ft)
Velocity = **5.62** m/sec

AQUATERRA ENVIRONMENTAL SOLUTIONS, INC.

LANDFILL GAS FLARE TESTING LOG
EXIT VELOCITY DETERMINATION

Waste Management, Inc.
Cottonwood Hills Recycling and Disposal Facility
Marissa, Illinois

Sample No. **Cottonwood 3**
Flare Tip Diameter (in) 10

Date	Time	Flow Rate Reading (SCFM)	Static Pressure (in H20)	Temperature (°F)
6/24/2010	14:56	612	2.00	127

Flare Tip Cross Sectional Area (ft2)

Area = $(\Pi/4) \times (D^2)$
Area = (3.14159/4) x (10/12)^2
Area = 0.55 ft^2

Velocity (ft/min)

Velocity = Q/A
Velocity = 612 / 0.55
Velocity = 1112.73 ft/min

Convert to m/sec

Velocity = (1112.73 ft/min) x (1 min/60 sec) x (1 m/3.281 ft)
Velocity = **5.65** m/sec

AQUATERRA ENVIRONMENTAL SOLUTIONS, INC.
LANDFILL GAS FLARE TESTING LOG
EXIT VELOCITY DETERMINATION

Waste Management, Inc.
Cottonwood Hills Recycling and Disposal Facility
Marissa, Illinois

Sample No. **Cottonwood 4**
Flare Tip Diameter (in) 10

Date	Time	Flow Rate Reading (SCFM)	Static Pressure (in H20)	Temperature (°F)
10/28/2010	13:50	615	0.00	110

Flare Tip Cross Sectional Area (ft2)

Area = $(\pi/4) \times (D^2)$
Area = (3.14159/4) x (10/12)^2
Area = 0.55 ft^2

Velocity (ft/min)

Velocity = Q/A
Velocity = 615 / 0.55
Velocity = 1118.18 ft/min

Convert to m/sec

Velocity = (1118.18 ft/min) x (1 min/60 sec) x (1 m/3.281 ft)
Velocity = **5.68** m/sec

AQUATERRA ENVIRONMENTAL SOLUTIONS, INC.

LANDFILL GAS FLARE TESTING LOG
EXIT VELOCITY DETERMINATION

Waste Management, Inc.
Cottonwood Hills Recycling and Disposal Facility
Marissa, Illinois

Sample No. **Cottonwood 5**
Flare Tip Diameter (in) 10

Date	Time	Flow Rate Reading (SCFM)	Static Pressure (in H20)	Temperature (°F)
10/28/2010	14:40	615	0.00	110

Flare Tip Cross Sectional Area (ft2)

Area = $(\Pi/4) \times (D^2)$
Area = (3.14159/4) x (10/12)^2
Area = 0.55 ft^2

Velocity (ft/min)

Velocity = Q/A
Velocity = 615 / 0.55
Velocity = 1118.18 ft/min

Convert to m/sec

Velocity = (1118.18 ft/min) x (1 min/60 sec) x (1 m/3.281 ft)
Velocity = **5.68** m/sec

AQUATERRA ENVIRONMENTAL SOLUTIONS, INC.

LANDFILL GAS FLARE TESTING LOG
EXIT VELOCITY DETERMINATION

Waste Management, Inc.
Cottonwood Hills Recycling and Disposal Facility
Marissa, Illinois

Sample No. **Cottonwood 6**
Flare Tip Diameter (in) 10

Date	Time	Flow Rate Reading (SCFM)	Static Pressure (in H20)	Temperature (°F)
10/28/2010	16:25	610	0.00	110

Flare Tip Cross Sectional Area (ft2)

Area = $(\pi/4) \times (D^2)$
Area = (3.14159/4) x (10/12)^2
Area = 0.55 ft^2

Velocity (ft/min)

Velocity = Q/A
Velocity = 610 / 0.55
Velocity = 1109.09 ft/min

Convert to m/sec

Velocity = (1109.09 ft/min) x (1 min/60 sec) x (1 m/3.281 ft)
Velocity = **5.63** m/sec

MAXIMUM PERMITTED EXIT VELOCITY

AQUATERRA ENVIRONMENTAL SOLUTIONS, INC.

LANDFILL GAS FLARE TESTING LOG
MAXIMUM PERMITTED EXIT VELOCITY CALCULATIONS

Waste Management, Inc.
Cottonwood Hills Recycling and Disposal Facility
Marissa, Illinois

Maximum permitted exit velocity calculated using the following equation:

$\text{Log}(10)(V_{(max)}) = (H(T) + 28.8)/31.7$

where:

$V_{(max)}$: Maximum permitted exit velocity, m/sec
28.8: Constant
31.7: Constant
H (T): Net Heating Value in (MJ/scm) at 25 deg. C, 760 mm Hg

Sample No. **Cottonwood 1**
Net Heating Value Heating Value, H(T): 16.7 MJ/scm at 25 deg. C and 760 mm Hg

$\text{Log}(10)(V_{(max)}) = (H(T) + 28.8)/31.7$
$\text{Log}(10)(V_{(max)}) = (16.7 + 28.8)/31.7$
$\text{Log}(10)(V_{(max)}) = 1.4$
$V_{(max)} = 27.2$ m/sec
$V_{(max)} = 89.4$ ft/sec

AQUATERRA ENVIRONMENTAL SOLUTIONS, INC.
LANDFILL GAS FLARE TESTING LOG
MAXIMUM PERMITTED EXIT VELOCITY CALCULATIONS

Waste Management, Inc.
Cottonwood Hills Recycling and Disposal Facility
Marissa, Illinois

Maximum permitted exit velocity calculated using the following equation:

$\text{Log}(10)(V_{(max)}) = (H(T) + 28.8)/31.7$

where:

$V_{(max)}$: Maximum permitted exit velocity, m/sec
28.8: Constant
31.7: Constant
H (T): Net Heating Value in (MJ/scm) at 25 deg. C, 760 mm Hg

Sample No. **Cottonwood 2**
Net Heating Value Heating Value, H(T): 17.0 MJ/scm at 25 deg. C and 760 mm Hg

$\text{Log}(10)(V_{(max)}) = (H(T) + 28.8)/31.7$
$\text{Log}(10)(V_{(max)}) = (17 + 28.8)/31.7$
$\text{Log}(10)(V_{(max)}) = 1.4$
$V_{(max)} = 27.8$ m/sec
$V_{(max)} = 91.4$ ft/sec

AQUATERRA ENVIRONMENTAL SOLUTIONS, INC.

LANDFILL GAS FLARE TESTING LOG
MAXIMUM PERMITTED EXIT VELOCITY CALCULATIONS

Waste Management, Inc.
Cottonwood Hills Recycling and Disposal Facility
Marissa, Illinois

Maximum permitted exit velocity calculated using the following equation:

$\text{Log}(10)(V_{(max)}) = (H(T) + 28.8)/31.7$

where:

$V_{(max)}$: Maximum permitted exit velocity, m/sec
28.8: Constant
31.7: Constant
H (T): Net Heating Value in (MJ/scm) at 25 deg. C, 760 mm Hg

Sample No. **Cottonwood 3**
Net Heating Value Heating Value, H(T): 17.3 MJ/scm at 25 deg. C and 760 mm Hg

$\text{Log}(10)(V_{(max)}) = (H(T) + 28.8)/31.7$
$\text{Log}(10)(V_{(max)}) = (17.3 + 28.8)/31.7$
$\text{Log}(10)(V_{(max)}) = 1.5$
$V_{(max)} = 28.5$ m/sec
$V_{(max)} = 93.4$ ft/sec

AQUATERRA ENVIRONMENTAL SOLUTIONS, INC.
LANDFILL GAS FLARE TESTING LOG
MAXIMUM PERMITTED EXIT VELOCITY CALCULATIONS

Waste Management, Inc.
Cottonwood Hills Recycling and Disposal Facility
Marissa, Illinois

Maximum permitted exit velocity calculated using the following equation:

$\text{Log}(10)(V_{(max)}) = (H(T) + 28.8)/31.7$

where:
$V_{(max)}$: Maximum permitted exit velocity, m/sec
28.8: Constant
31.7: Constant
H (T): Net Heating Value in (MJ/scm) at 25 deg. C, 760 mm Hg

Sample No. **Cottonwood 4**
Net Heating Value Heating Value, H(T): 17.3 MJ/scm at 25 deg. C and 760 mm Hg

$\text{Log}(10)(V_{(max)}) = (H(T) + 28.8)/31.7$
$\text{Log}(10)(V_{(max)}) = (17.3 + 28.8)/31.7$
$\text{Log}(10)(V_{(max)}) = 1.5$
$V_{(max)} = 28.5$ m/sec
$V_{(max)} = 93.4$ ft/sec

AQUATERRA ENVIRONMENTAL SOLUTIONS, INC.
LANDFILL GAS FLARE TESTING LOG
MAXIMUM PERMITTED EXIT VELOCITY CALCULATIONS

Waste Management, Inc.
Cottonwood Hills Recycling and Disposal Facility
Marissa, Illinois

Maximum permitted exit velocity calculated using the following equation:

$\text{Log (10)} (V_{(max)}) = (H(T) + 28.8)/31.7$

where:
$V_{(max)}$: Maximum permitted exit velocity, m/sec
28.8: Constant
31.7: Constant
H (T): Net Heating Value in (MJ/scm) at 25 deg. C, 760 mm Hg

Sample No. **Cottonwood 5**
Net Heating Value Heating Value, H(T): 17.0 MJ/scm at 25 deg. C and 760 mm Hg

$\text{Log (10)} (V_{(max)}) = (H(T) + 28.8)/31.7$
$\text{Log (10)} (V_{(max)}) = (17 + 28.8)/31.7$
$\text{Log (10)} (V_{(max)}) = 1.4$
$V_{(max)} = 27.8$ m/sec
$V_{(max)} = 91.4$ ft/sec

AQUATERRA ENVIRONMENTAL SOLUTIONS, INC.
LANDFILL GAS FLARE TESTING LOG
MAXIMUM PERMITTED EXIT VELOCITY CALCULATIONS

Waste Management, Inc.
Cottonwood Hills Recycling and Disposal Facility
Marissa, Illinois

Maximum permitted exit velocity calculated using the following equation:

$\text{Log (10)} (V_{(max)}) = (H(T) + 28.8)/31.7$

where:

$V_{(max)}$: Maximum permitted exit velocity, m/sec
28.8: Constant
31.7: Constant
H (T): Net Heating Value in (MJ/scm) at 25 deg. C, 760 mm Hg

Sample No. **Cottonwood 6**
Net Heating Value Heating Value, H(T): 17.3 MJ/scm at 25 deg. C and 760 mm Hg

$\text{Log (10)} (V_{(max)}) = (H(T) + 28.8)/31.7$
$\text{Log (10)} (V_{(max)}) = (17.3 + 28.8)/31.7$
$\text{Log (10)} (V_{(max)}) = 1.5$
$V_{(max)} = 28.5$ m/sec
$V_{(max)} = 93.4$ ft/sec

SULFUR COMPOUND CONCENTRATIONS

Cottonwood 2010 Sulfur Sampling and Testing of Open Flare						
	6/24/2010			10/28/2010		
	Cotton 1	Cotton 2	Cotton 3	Cotton 4	Cotton 5	Cotton 6
	(ppbV)	(ppbV)	(ppbV)	(ppbV)	(ppbV)	(ppbV)
Hydrogen Sulfide	16000	17000	18000	20000	24000	23000
Carbonyl Sulfide	70	77	76	86	100	81
Methyl Mercaptan	2600	2700	2900	3400	3900	3800
Ethyl Mercaptan	82	86	96	55	79	77
Dimethyl Sulfide	5700	6100	6200	12000	12000	12000
Carbon Disulfide	46	49	50	38	44	41
Isopropyl Mercaptan	220	230	240	170	200	200
tert-Butyl Mercaptan	330	350	360	330	340	370
n-Propyl Mercaptan	25	26	28	0	0	0
Ethyl Methyl Sulfide	62	67	67	73	69	75
Thiophene	260	280	290	210	220	210
Isobutyl Mercaptan	73	80	79	91	67	69
Diethyl Sulfide	10	11	11	0	0	0
n-Butyl Mercaptan	30	34	32	0	0	0
Dimethyl Disulfide	120	140	120	260	150	130
3-Methylthiophene	63	68	66	0	53	180
Tetrahydrothiophene	14	14	13	0	0	0
2,5-Dimethylthiophene	6.3	6.4	6	0	0	0
2-Ethylthiophene	7.7	5.8	6.3	0	0	0
Diethyl Disulfide	0	0	0	0	0	0
Total Per Sample (ppbV)	25719	27324.2	28640.3	36713	41222	40233
Average in ppmV	27.2			39.4		