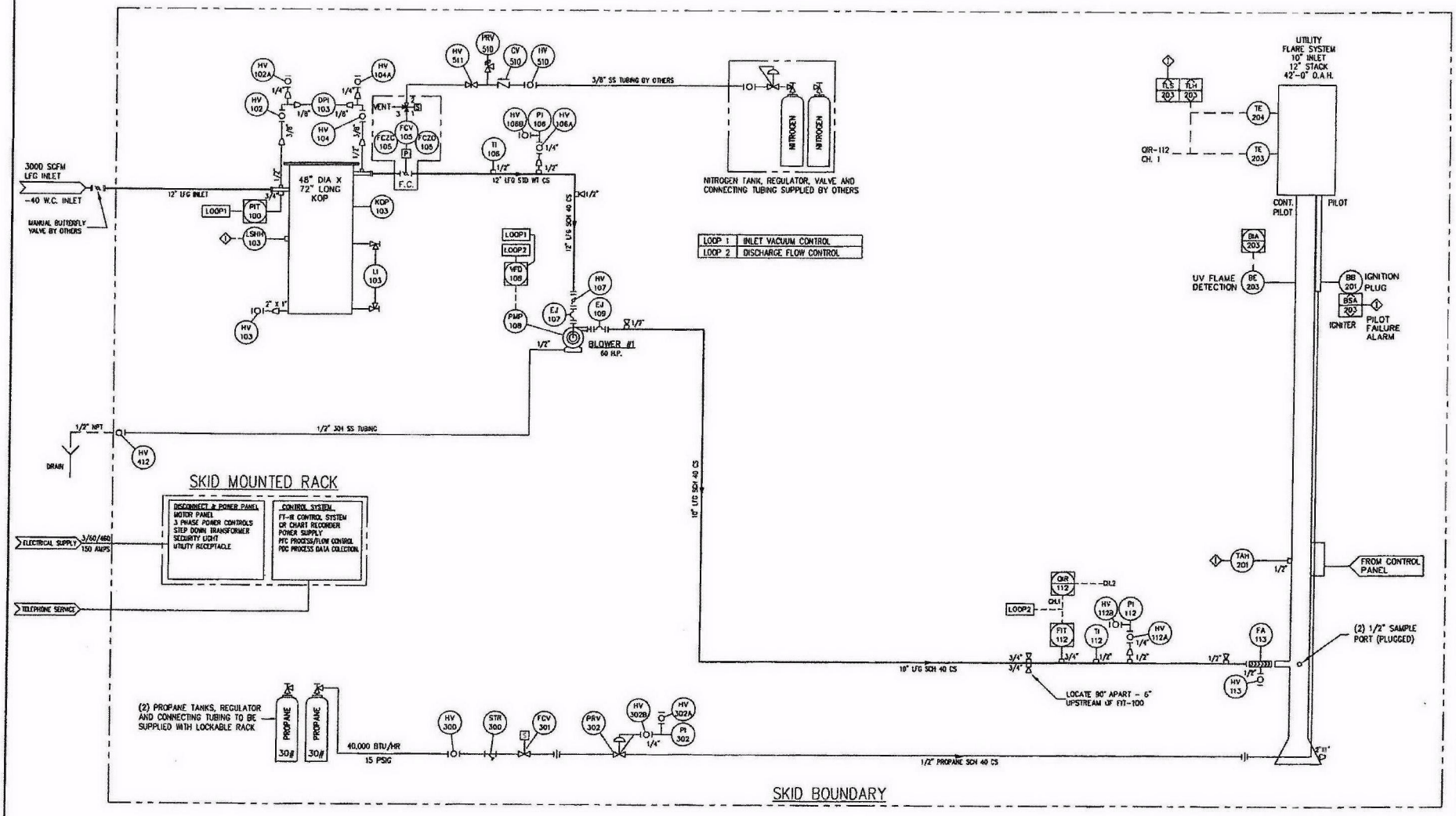

Shaw® LFG Specialties, L.L.C.

REV	DESCRIPTION / ISSUE	DATE	BY
0	ISSUED FOR PURCHASING	06/28/07	BKD

THIS DRAWING REPRESENTS INTELLECTUAL PROPERTY OF LFG SPECIALTIES, L.L.C. ANY MODIFICATION TO THE ORIGINAL BY OTHER THAN LFG SPECIALTIES, L.L.C. PERSONNEL VIOLATES ITS ORIGINAL PURPOSE AND AS SUCH IS RENDERED VOID. LFG SPECIALTIES, L.L.C. WILL NOT BE HELD LIABLE FOR ANY CHANGES MADE TO THIS DOCUMENT WITHOUT THE EXPRESS WRITTEN CONSENT OF THE ORIGINATOR.

PIPING AND INSTRUMENTATION DIAGRAM

DRAWN BY	CHECKED	APPROVED BY	REV
BKD	LZ	LZ	0
SCALE	DATE	PROJECT NO	
NONE	06/14/07	127337	

PROJECT NAME: LANDFILL GAS UTILITY FLARE #PCF1242/10
COTTONWOOD HILLS LANDFILL
MARISSA, IL

CUSTOMER: WASTE MANAGEMENT

DRAWING NO.	DWG NO.	REV
2093	PID	1

File: F:\LFG\2000 DRAWINGS\2093\MECHANICAL\2093-PID-SHT1.dwg Layout: Model User: randy.mcquillen Nov 05, 2007 - 3:35pm

WM00229

SYSTEM TO BE ORIENTED WITH THE FLARE CONTROL PANEL FACING NORTH

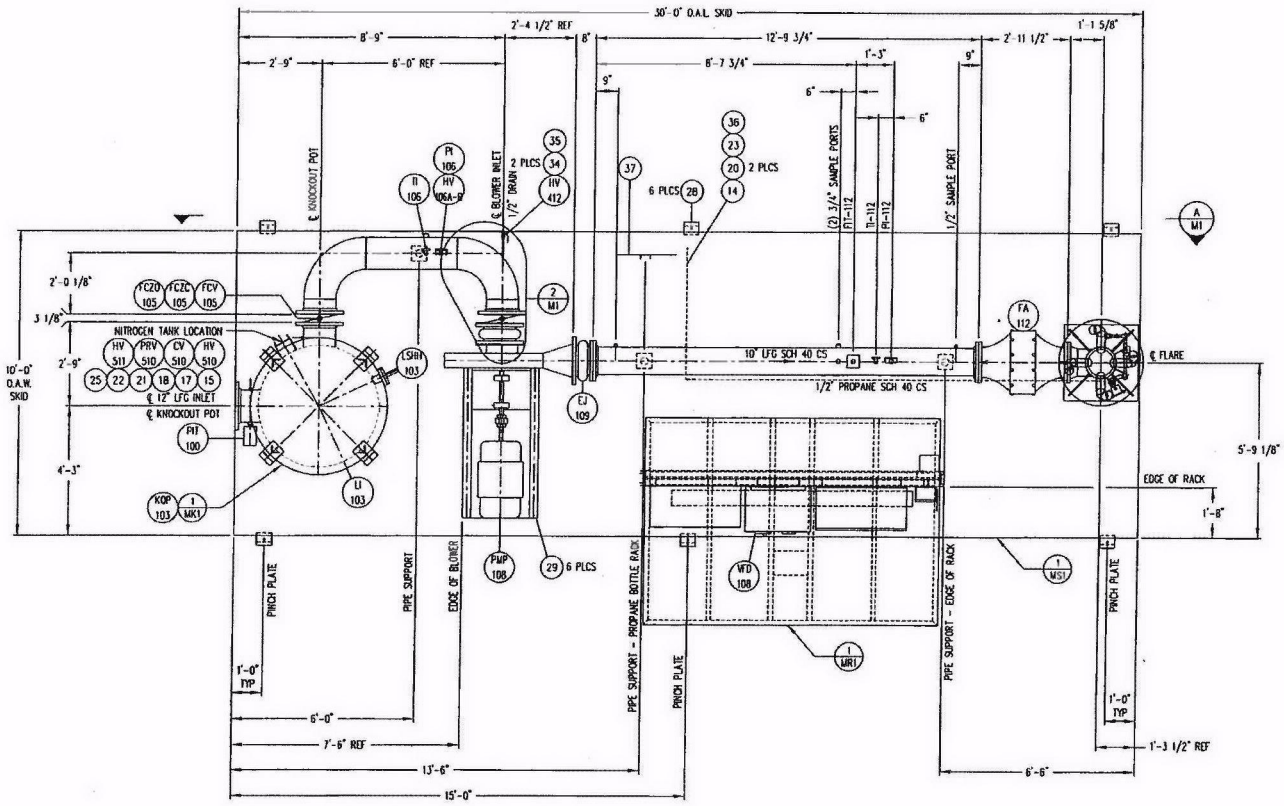

1 / M1 PLAN - SKID ASSEMBLY

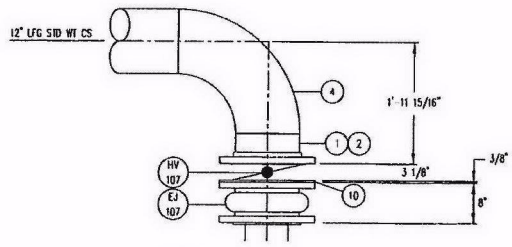

2 / M1 DETAIL - BLOWER INLET
SCALE 2X

FOR B.O.M. SEE DRAWING 2093-M1-SHT2

NOTES:

1. ALL BOLTS, CAP SCREWS AND NUTS WILL BE SAE GRADE 8 WITH YELLOW ZINC DICHROMATE PLATING. THREADED RODS WILL BE STAINLESS STEEL. ALL THREADS WILL BE UNIFIED NATIONAL COARSE.
2. ALL 1/8"-1 1/2" PIPES WILL BE STANDARD BLACK PIPE ASTM A53 OR ASTM A106. ALL 1/8"-1 1/2" PIPE NIPPLES WILL BE STANDARD BLACK PIPE ASTM A733.
3. ALL 1/8"-1 1/2" PIPE FITTINGS (ELBOWS, TEES, BUSHINGS, ETC.) WILL BE STANDARD (CLASS 150) WITH A BLACK FINISH - UNLESS OTHERWISE SPECIFIED.
4. EXTERNAL PIPE SURFACES TO BE BLASTED TO SP-7 SPECIFICATIONS, APPLIES TO CARBON STEEL PIPING ONLY.
5. ALL CARBON STEEL VESSELS AND PIPE EXTERNALS TO BE COATED WITH RUST PROHIBITING SHERWIN WILLIAMS B67R5 RED OXIDE RECOATABLE PRIMER AND FINISHED WITH A 3 MIL COAT OF SLATE GREY COLORED INDUSTRIAL ACRYLIC POLYURETHANE, SHERWIN WILLIAMS ACROLON 218 HS.
6. INSTALL GAUGES TO FACE CONTROL RACK SIDE.
7. ALL PIPE BUTT WELD JOINTS WILL HAVE A 1/8" ROOT OPENING.
8. A MINIMUM DISTANCE FROM POWER LINES AND STRUCTURES OF 4 TIMES THE STACK HEIGHT MUST BE MAINTAINED AROUND THE FLARE. IF THIS DISTANCE IS NOT FEASIBLE, PLEASE CONTACT LFG SPECIALTIES ENGINEERING.

Shaw® LFG Specialties, L.L.C.

REV	DESCRIPTION / ISSUE	DATE	BY
0	ISSUED FOR PURCHASING	06/28/07	BKD

THIS DRAWING REPRESENTS INTELLECTUAL PROPERTY OF LFG SPECIALTIES, L.L.C. ANY MODIFICATION TO THE ORIGINAL BY OTHER THAN LFG SPECIALTIES, L.L.C. PERSONNEL VIOLATES ITS ORIGINAL PURPOSE AND AS SUCH IS RENDERED VOID. LFG SPECIALTIES, L.L.C. WILL NOT BE HELD LIABLE FOR ANY CHANGES MADE TO THIS DOCUMENT WITHOUT THE EXPRESS WRITTEN CONSENT OF THE ORIGINATOR.

UTILITY FLARE SKID ASSEMBLY

DRAWN BY	CHECKED	APPROVED BY	REV
BKD	LZ	LZ	0

SCALE	DATE	PROJECT NO.
1/2" = 1'-0"	06/22/07	127337

PROJECT NAME: LANDFILL GAS UTILITY FLARE #PCF1242110
COTTONWOOD HILLS LANDFILL
MARISSA, IL

CUSTOMER: WASTE MANAGEMENT

SERIAL NO.	DWG NO.	SHT
2093	M1	1

File: F:\LFG\2000 DRAWINGS\2093\MECHANICAL\2093-M1-SHT1.dwg Layout: Model User: randy-macpilot Sep 12, 2007 - 11:15am

WM00230

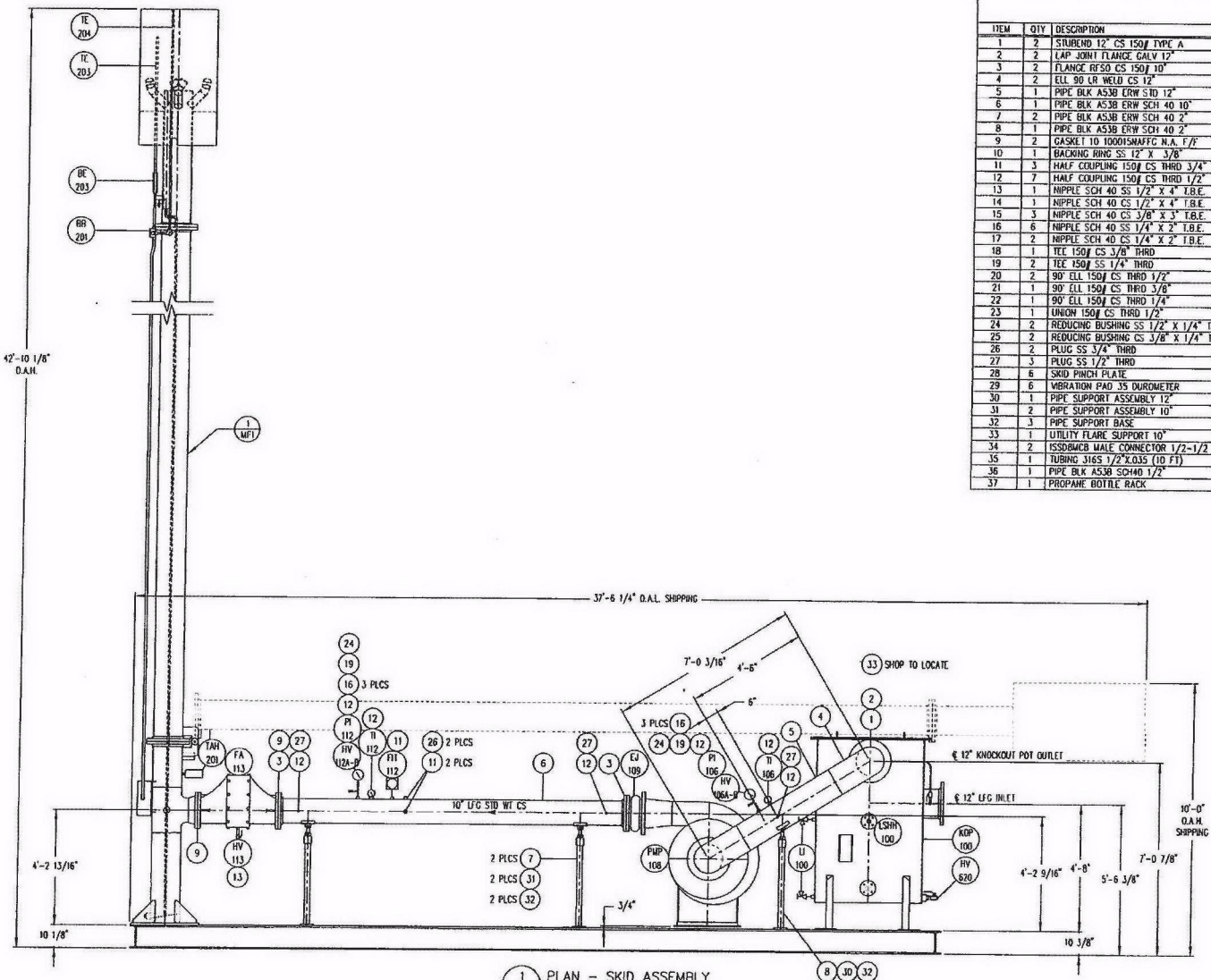

1 / M1 PLAN - SKID ASSEMBLY

BILL OF MATERIAL

ITEM	QTY	DESCRIPTION	SUPPLIER	PART NO.	INVENTORY AMOUNT
1	2	STUBEND 12" CS 150# TYPE A	LFG	WFE12B40	
2	2	LAP JOINT FLANGE GALV 12"	LFG	WFLJI2GALV	
3	2	FLANGE RFSO CS 150# 10"	LFG	WFF10B3	
4	2	ELL 90 LR WELD CS 12"	LFG	WFL120B4	
5	1	PIPE BLK A53B ERW STD 12"	LFG	PW12BSTD	4
6	1	PIPE BLK A53B ERW SCH 40 10"	LFG	PW10B40	12.8
7	2	PIPE BLK A53B ERW SCH 40 2"	LFG	PW2B40	3.3
8	1	PIPE BLK A53B ERW SCH 40 2"	LFG	PW2B40	3.2
9	2	GASKET 10 1000ISWAFFG N.A. F/F	LFG	WFG10NA	
10	1	BACKING RING SS 12" X 3/8"	LFG	WFJBR12385	
11	3	HALF COUPLING 150# CS THRD 3/4"	LFG	FLOOR STOCK	
12	7	HALF COUPLING 150# CS THRD 1/2"	LFG	FLOOR STOCK	
13	1	NIPPLE SCH 40 SS 1/2" X 4" T.B.E.	LFG	FLOOR STOCK	
14	1	NIPPLE SCH 40 CS 1/2" X 4" T.B.E.	LFG	FLOOR STOCK	
15	3	NIPPLE SCH 40 CS 3/8" X 3" T.B.E.	LFG	FLOOR STOCK	
16	6	NIPPLE SCH 40 SS 1/4" X 2" T.B.E.	LFG	FLOOR STOCK	
17	2	NIPPLE SCH 40 CS 1/4" X 2" T.B.E.	LFG	FLOOR STOCK	
18	1	TEE 150# CS 3/8" THRD	LFG	FLOOR STOCK	
19	2	TEE 150# SS 1/4" THRD	LFG	FLOOR STOCK	
20	2	90° ELL 150# CS THRD 1/2"	LFG	FLOOR STOCK	
21	1	90° ELL 150# CS THRD 3/8"	LFG	FLOOR STOCK	
22	1	90° ELL 150# CS THRD 1/4"	LFG	FLOOR STOCK	
23	1	UNION 150# CS THRD 1/2"	LFG	FLOOR STOCK	
24	2	REDUCING BUSHING SS 1/2" X 1/4" THRD	LFG	FLOOR STOCK	
25	2	REDUCING BUSHING CS 3/8" X 1/4" THRD	LFG	FLOOR STOCK	
26	2	PLUG SS 3/4" THRD	LFG	FLOOR STOCK	
27	3	PLUG SS 1/2" THRD	LFG	FLOOR STOCK	
28	6	SKID PINCH PLATE	LFG	PINCHPLATE	
29	6	VIBRATION PAD 35 DUROMETER	LFG	VP350UROMETER	
30	1	PIPE SUPPORT ASSEMBLY 12"	LFG	PIPESUPPORT12	
31	2	PIPE SUPPORT ASSEMBLY 10"	LFG	PIPESUPPORT10	
32	3	PIPE SUPPORT BASE	LFG	PIPESUPPORTBASE	
33	1	UTILITY FLARE SUPPORT 10"	LFG	LFGSD00750	
34	2	1SSDBMCB MALE CONNECTOR 1/2-1/2	LFG	PFK1212MC	
35	1	TUBING 316S 1/2"X.035 (10 FT)	LFG	PT12X35S	
36	1	PIPE BLK A53B SCH40 1/2"	LFG	PW012B40	10
37	1	PROPANE BOTTLE RACK	LFG	PRORACK	

NOTES:

1. ALL BOLTS, CAP SCREWS AND NUTS WILL BE SAE GRADE B WITH YELLOW ZINC DICHROMATE PLATING. THREADED RODS WILL BE STAINLESS STEEL. ALL THREADS WILL BE UNIFIED NATIONAL COARSE.
2. ALL 1/8"-1 1/2" PIPES WILL BE STANDARD BLACK PIPE ASTM A53 OR ASTM A106. ALL 1/8"-1 1/2" PIPE NIPPLES WILL BE STANDARD BLACK PIPE ASTM A733.
3. ALL 1/8"-1 1/2" PIPE FITTINGS (ELBOWS, TEES, BUSHINGS, ETC.) WILL BE STANDARD (CLASS 150) WITH A BLACK FINISH - UNLESS OTHERWISE SPECIFIED.
4. EXTERNAL PIPE SURFACES TO BE BLASTED TO SP-7 SPECIFICATIONS, APPLIES TO CARBON STEEL PIPING ONLY.
5. ALL CARBON STEEL VESSELS AND PIPE EXTERNALS TO BE COATED WITH RUST PROHIBITING SHERWIN WILLIAMS B67R5 RED OXIDE RECOATABLE PRIMER AND FINISHED WITH A 3 MIL COAT OF SLATE GREY COLORED INDUSTRIAL ACRYLIC POLYURETHANE, SHERWIN WILLIAMS ACROLON 218 HS.
6. INSTALL GAUGES TO FACE CONTROL RACK SIDE.
7. ALL PIPE BUTT WELD JOINTS WILL HAVE A 1/8" ROOT OPENING.

Shaw® LFG Specialties, L.L.C.

REV	DESCRIPTION / ISSUE	DATE	BY
0	ISSUED FOR PURCHASING	06/28/07	BKD

THIS DRAWING REPRESENTS INTELLECTUAL PROPERTY OF LFG SPECIALTIES, L.L.C. ANY MODIFICATION TO THE ORIGINAL BY OTHER THAN LFG SPECIALTIES, L.L.C. PERSONNEL VIOLATES ITS ORIGINAL PURPOSE AND AS SUCH IS REVOKED/ VOID. LFG SPECIALTIES, L.L.C. WILL NOT BE HELD LIABLE FOR ANY CHANGES MADE TO THIS DOCUMENT WITHOUT THE EXPRESS WRITTEN CONSENT OF THE ORIGINATOR.

UTILITY FLARE
SKID ASSEMBLY

DRAWN BY:	CHECKED:	APPROVED BY:	SIZE:
BKD	LZ	LZ	D
SCALE: 1/2" = 1'-0"	DATE: 06/22/07	PROJECT NO: 127337	

PROJECT NAME: LANDFILL GAS UTILITY FLARE #PCF1242110
COTTONWOOD HILLS LANDFILL
MARISSA, IL

CLIENT: WASTE MANAGEMENT

SERIAL NO.	DWG NO.	SHT.
2093	M1	1

File: F:\LFG\2000 DRAWINGS\2093\MECHANICAL\2093-M1-SKID.dwg Layout: Model User: randy.mcquillen Sep 12, 2007 - 11:16am

WM00231