LYNN WATER AND SEWER COMMISSION

PHASE 3 WEST LYNN SEWER SEPARATION

DESIGN DEVELOPMENT PHASE

JULY 31, 2019

STANTEC JOB NO. 195130174

PREPARED FOR:

LYNN WATER & SEWER COMMISSION

Executive Director:	Daniel F. O'Neill
Chief Engineer:	Anthony Marino
Treasurer:	David Travers
Board of Commissioners:	William Trahant (Chairman) Richard Colucci David Ellis Vincent Lozzi Jr Walter Proodian

PREPARED BY PROJECT DESIGN TEAM:

Stantec

TETRA TECH

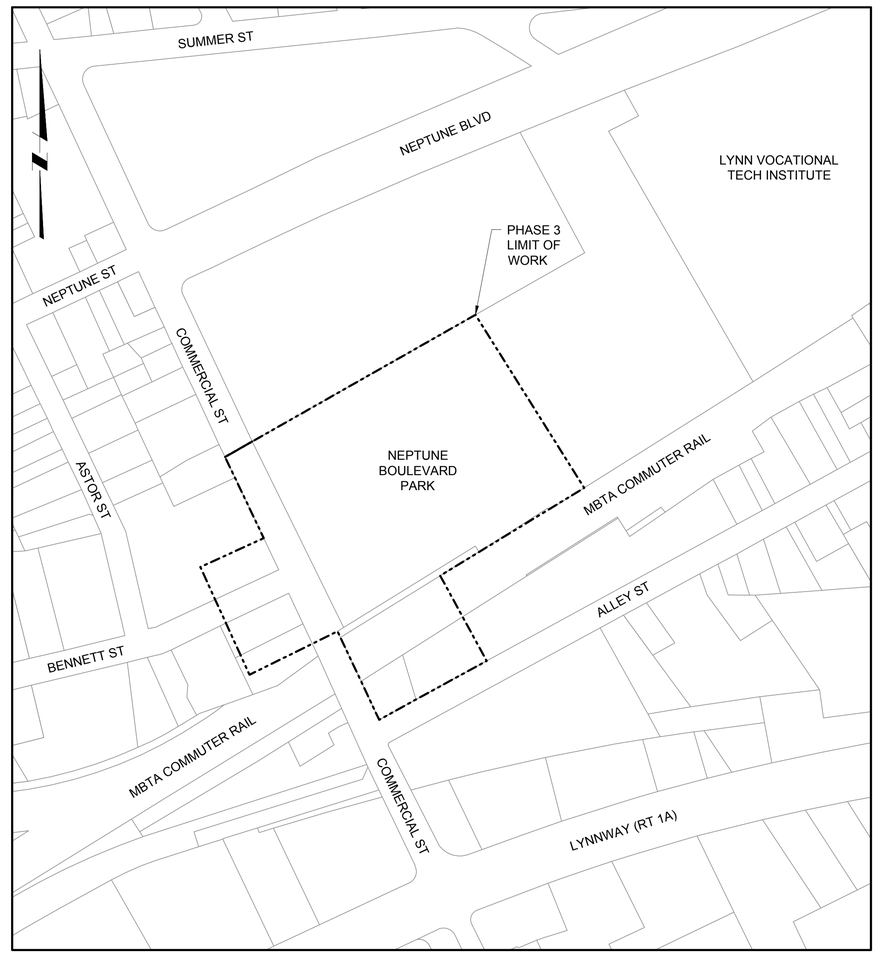

LOCATION MAP

SCALE: 1" = 150'

60% DESIGN 7/31/2019

NOT FOR CONSTRUCTION

This document is an interim document and not suitable for construction. As an interim document, it may contain data that is potentially inaccurate or incomplete and is not to be relied upon without the express written consent of the preparer.

BY: HALSTEAD, ZACHARY

PLOT DATE: Thursday, July 25, 2019

DWG FILE: C:\pwworkdir\d0534531\PHASE 3_BSS_G-01.dwg

DISCIPLINE	SHEET NAME - PHASE 3	SHEET NUMBER
GENERAL	COVER SHEET	G-01
GENERAL	DRAWING INDEX	G-02
CIVIL GENERAL	NOTES	CG-01
CIVIL GENERAL	LEGEND AND ABBREVIATIONS	CG-02
CIVIL GENERAL	STANDARD DETAILS - I	CG-03
CIVIL GENERAL	STANDARD DETAILS - II	CG-04
CIVIL GENERAL	STANDARD DETAILS - III	CG-05
CIVIL GENERAL	STANDARD DETAILS - IV	CG-06
CIVIL GENERAL	STANDARD DETAILS - V	CG-07
CIVIL GENERAL	STANDARD DETAILS - VI	CG-08
CIVIL GENERAL	STANDARD DETAILS - VII	CG-09
CIVIL GENERAL	STANDARD DETAILS - VIII	CG-10
CIVIL GENERAL	STANDARD DETAILS - IX	CG-11
CIVIL GENERAL	STANDARD DETAILS - X	CG-12
CIVIL GENERAL	STANDARD DETAILS - XI	CG-13
CIVIL GENERAL	GEOTECHNICAL INSTRUMENTATION AND MONITORING DETAILS	CG-14
CIVIL GENERAL	GEOTECHNICAL TUNNELING DETAILS	CG-15
CIVIL	KEY PLAN	C-01
CIVIL	DEMOLITION, SITE CONTROLS AND TEST PIT SCHEDULE	C-02
CIVIL	BORING PLAN	C-03
CIVIL	GEOTECHNICAL INSTRUMENTATION PLAN	C-04
CIVIL	OVERALL SITE PLAN	C-05
CIVIL	PLAN AND PROFILE COMMERCIAL ST STA 114+00 TO STA 118+00	C-06
CIVIL	PLAN AND PROFILE BENNETT ST STA 200+00 TO STA 203+00	C-07
CIVIL	PLAN AND PROFILE YARD PIPING STA 4500+00 TO STA 4503+00	C-08
CIVIL	PLAN AND PROFILE YARD PIPING STA 4503+00 TO STA 4505+93	C-09
CIVIL	PLAN AND PROFILE YARD PIPING STA 4700+00 TO STA 4703+00	C-10
CIVIL	PLAN AND PROFILE YARD PIPING STA 4703+00 TO STA 4705+74	C-11
STRUCTURAL GENERAL	LEGEND, NOTES, AND DESIGN CRITERIA - I	SG-01
STRUCTURAL GENERAL	LEGEND, NOTES, AND DESIGN CRITERIA - II	SG-02
STRUCTURAL GENERAL	LEGEND, NOTES, AND DESIGN CRITERIA - III	SG-03
STRUCTURAL GENERAL	STANDARD DETAILS - I	SG-04
STRUCTURAL GENERAL	STANDARD DETAILS - II	SG-05
STRUCTURAL GENERAL	STANDARD DETAILS - III	SG-06
STRUCTURAL GENERAL	STANDARD DETAILS - IV	SG-07
STRUCTURAL GENERAL	STANDARD DETAILS - V	SG-08
STRUCTURAL GENERAL	STANDARD DETAILS - VI	SG-09
STRUCTURAL GENERAL	STANDARD DETAILS - VII	SG-10
STRUCTURAL	PUMP STATION PILE PLAN	S-01
STRUCTURAL	PUMP STATION BOTTOM PLAN AT EL -16.00	S-02
STRUCTURAL	PUMP STATION INTERMEDIATE PLAN	S-03
STRUCTURAL	PUMP STATION PLAN AT TOP LEVEL	S-04
STRUCTURAL	PUMP STATION SECTION AND DETAILS - I	S-05
STRUCTURAL	PUMP STATION SECTION AND DETAILS - II	S-06
STRUCTURAL	PUMP STATION SECTION AND DETAILS - III	S-07
STRUCTURAL	ELECTRICAL BUILDING FOUNDATION PLAN	S-08
STRUCTURAL	ELECTRICAL BUILDING PLAN AT GROUND LEVEL	S-09
STRUCTURAL	ELECTRICAL BUILDING ROOF PLAN	S-10
STRUCTURAL	ELECTRICAL BUILDING SECTIONS	S-11
STRUCTURAL	ELECTRICAL BUILDING DETAILS - I	S-12
ARCHITECTURAL GENERAL	LEGENDS, ABBREVIATIONS, AND NOTES	AG-01
ARCHITECTURAL	ELECTRICAL BUILDING - LEVEL 1 FLOOR PLAN, RCP AND ROOF PLAN	A-01
ARCHITECTURAL	ELECTRICAL BUILDING - EXTERIOR ELEVATION - I	A-02
ARCHITECTURAL	ELECTRICAL BUILDING - EXTERIOR ELEVATION - II	A-03
ARCHITECTURAL	ELECTRICAL BUILDING - BUILDING SECTIONS	A-04
MECHANICAL GENERAL	LEGEND AND NOTES	MG-01
MECHANICAL GENERAL	STANDARD DETAILS - I	MG-02
MECHANICAL GENERAL	STANDARD DETAILS - II	MG-03
MECHANICAL	PROCESS FLOW DIAGRAM	M-01
MECHANICAL	EQUIPMENT SCHEDULE	M-02
MECHANICAL	WET WELL PLAN	M-03
MECHANICAL	WET WELL SECTIONS - I	M-04
MECHANICAL	WET WELL SECTIONS - I I	M-05
MECHANICAL	FLOW BYPASS CONNECTION VAULT PLAN AND SECTION	M-06
MECHANICAL	FLOW METER VAULTS PLANS AND SECTIONS	M-07

DISCIPLINE	SHEET NAME - PHASE 3	SHEET NUMBER
HVAC GENERAL	LEGEND, ABBREVIATIONS AND GENERAL NOTES	HG-01
HVAC	FLOOR PLAN	H-01
HVAC	DETAILS	H-02
HVAC	SCHEDULES	H-03
PLUMBING GENERAL	LEGEND, ABBREVIATIONS AND GENERAL NOTES	PG-01
PLUMBING	DOMESTIC WATER FLOOR PLAN	P-01
PLUMBING	SANITARY FLOOR PLAN	P-02
PLUMBING	DETAILS	P-03
PLUMBING	SCHEDULES	P-04
ELECTRICAL GENERAL	LEGEND, ABBREVIATIONS, AND GENERAL NOTES	EG-01
ELECTRICAL	SITE PLAN	E-01
ELECTRICAL	POWER PLAN	E-02
ELECTRICAL	LIGHTING PLAN	E-03
ELECTRICAL	ONE-LINE DIAGRAM	E-04
ELECTRICAL	WIRING DIAGRAMS	E-05
ELECTRICAL	SCHEDULES	E-06
ELECTRICAL	INSTRUMENTATION RISER DIAGRAM	E-07
ELECTRICAL	DETAILS - I	E-08
ELECTRICAL	DETAILS - II	E-09
INSTRUMENTATION AND CONTROLS GENERAL	LEGEND AND NOTES	IG-01
INSTRUMENTATION AND CONTROLS GENERAL	PLC CONTROL PANEL COMMUNICATIONS	IG-02
INSTRUMENTATION AND CONTROLS GENERAL	INSTRUMENTAL STANDARD DETAILS - I	IG-03
INSTRUMENTATION AND CONTROLS GENERAL	INSTRUMENTAL STANDARD DETAILS - II	IG-04
INSTRUMENTATION AND CONTROLS GENERAL	INSTRUMENTAL STANDARD DETAILS - III	IG-05
INSTRUMENTATION AND CONTROLS GENERAL	CONTROL PANEL TYPICAL LAYOUT	IG-06
INSTRUMENTATION AND CONTROLS GENERAL	CONTROL PANEL BILL OF MATERIALS	IG-07
INSTRUMENTATION AND CONTROLS GENERAL	P&ID - I	IG-08
INSTRUMENTATION AND CONTROLS GENERAL	P&ID - II	IG-09
LANDSCAPE GENERAL	DETAILS - I	LG-01
LANDSCAPE GENERAL	DETAILS - II	LG-02
LANDSCAPE	SITE PLAN	L-01
LANDSCAPE	GRADING PLAN	L-02
TRAFFIC GENERAL	LEGEND AND NOTES	TG-01
TRAFFIC GENERAL	ADVANCE WARNING SIGN PLAN AND STREET PLAN	TG-02
TRAFFIC GENERAL	TYPICAL DETAILS - I	TG-03
TRAFFIC GENERAL	TYPICAL DETAILS - II	TG-04
TRAFFIC GENERAL	TYPICAL DETAILS - III	TG-05
TRAFFIC GENERAL	TYPICAL DETAILS - IV	TG-06

HALSTEAD, ZACHARY
Friday, July 26, 2019
C:\pwworkdir\d0534531\PHASE 3_BSS_G-02.dwg

REV	DATE	BY	DESCRIPTION

SCALE
NO SCALE

WARNING
0 ½ 1
IF THIS BAR DOES NOT MEASURE 1" THEN DRAWING IS NOT TO SCALE

DATE JULY 31, 2019
DRAWN BY Z HALSTEAD
DESIGNED BY Z HALSTEAD
CHECKED BY
APPROVED BY

60% DESIGN
NOT FOR CONSTRUCTION

This document is an interim document and not suitable for construction. As an interim document, it may contain data that is potentially inaccurate or incomplete and is not to be relied upon without the express written consent of the preparer.

Stantec

LYNN WATER & SEWER COMMISSION

LYNN WATER AND SEWER COMMISSION
PHASE 3 WEST LYNN SEWER SEPARATION
GENERAL
DRAWING INDEX

SHEET
G-02

195130174

CIVIL GENERAL NOTES

1. DIVERSION, BYPASS, AND CONTROL OF SANITARY SEWER, STORM DRAIN AND DEWATERING FLOWS ARE THE RESPONSIBILITY OF THE CONTRACTOR. THE CONTRACTOR'S INTENDED DIVERSION, BYPASS, AND CONTROL, AND DEWATERING PLANS SHALL BE SUBMITTED TO THE OWNER AND ENGINEER FOR REVIEW AT LEAST 7 DAYS PRIOR TO ANY EXCAVATION. WHEN PERFORMING DEWATERING, THE CONTRACTOR SHALL ADHERE TO THE REQUIREMENTS OF THE SPECIFICATIONS AND ALL DEWATERING PERMITS.

2. THE CONTRACTOR SHALL TEMPORARILY MATCH EXISTING GRADES AND CONDITIONS WITHIN THE CONSTRUCTION AREA UNTIL FINAL RESTORATION IS COMPLETE.

3. STRAIGHT SLOPES SHALL BE MAINTAINED BETWEEN INVERT ELEVATIONS SHOWN OR SPECIFIED.

4. ALL EXTERIOR SURFACES OF CONCRETE STRUCTURES SHALL BE COATED IN ACCORDANCE WITH THE SPECIFICATIONS.

5. THE LOCATION OF EXISTING UNDERGROUND PIPES, CABLES, CONDUITS AND STRUCTURES AS SHOWN HAS BEEN COLLECTED FROM THE BEST AVAILABLE SOURCES AND THE OWNER TOGETHER WITH ITS AGENTS DOES NOT IMPLY OR GUARANTEE THE DATA AND INFORMATION IN CONNECTION WITH THE UNDERGROUND PIPES, CABLES, CONDUITS, STRUCTURES AND SUCH OTHER PARTS AS TO THEIR COMPLETENESS NOR THEIR LOCATIONS AS INDICATED. THE CONTRACTOR SHALL CONTACT UTILITY OWNERS AND REQUEST MARKING LOCATION OF ALL THEIR LINES IN THE WORK AREAS. PRIOR TO EXCAVATION THE CONTRACTOR SHALL ASSUME THAT THERE ARE EXISTING WATER, GAS, AND OTHER UTILITY CONNECTIONS TO EACH AND EVERY BUILDING ENROUTE, WHETHER THEY APPEAR ON THE PLANS OR NOT. ANY EXPENSE AND/OR DELAY OCCASIONED BY THESE UTILITIES AND STRUCTURES OR DAMAGE THERETO, INCLUDING THOSE NOT SHOWN, SHALL BE THE RESPONSIBILITY OF THE CONTRACTOR AND AT NO ADDITIONAL EXPENSE TO THE OWNER. CONTRACTOR TO POTHOLE IN ADVANCE OF WORK AS REQUIRED TO AVOID CONFLICTS WITH EXISTING UTILITIES. THIS WORK SHALL BE INCIDENTAL TO THE CONTRACTOR. NO ADDITIONAL PAYMENT.

6. THE CONTRACTOR SHALL PRE-MARK THE EXCAVATION AREA IN WHITE AND NOTIFY THE DIG SAFE CENTER (TEL. NO. 1-888-DIG-SAFE) AT LEAST 72 BUSINESS HOURS PRIOR TO ANY EXCAVATION WORK. IN ADDITION, NOTIFICATION SHALL ALSO BE GIVEN TO ALL AFFECTED PRIVATE AND/OR PUBLIC UTILITIES TO PERMIT STREET MARKING OF THEIR LINES.

7. ALL EXISTING MANHOLE FRAMES, COVERS, CATCH BASIN FRAMES AND GRATES REMOVED SHALL REMAIN THE PROPERTY OF THE OWNER AND THEN LATER BE SELECTED BY THE OWNER AND DELIVERED BY THE CONTRACTOR TO A LOCATION DESIGNATED BY THE OWNER. ALL REMAINING FRAMES, COVERS AND GRATES NOT SELECTED BY AND DELIVERED TO THE OWNER SHALL BE DISPOSED OF BY THE CONTRACTOR AT NO ADDITIONAL COST TO THE OWNER.

8. THE CONTRACTOR SHALL PROVIDE A MINIMUM OF 36 INCHES OF COVER ON STORM DRAIN PIPELINES UNLESS OTHER SHOWN OR DIRECTED.

9. WHERE TEMPORARY OR PERMANENT UTILITY RELOCATION IS REQUIRED, THE CONTRACTOR SHALL NOTIFY THE AFFECTED UTILITY COMPANY 30 DAYS IN ADVANCE OF CONSTRUCTION AND SHALL COORDINATE THE NEW WORK WITH THE UTILITY RELOCATION.

10. LOCATIONS OF NEW WATER, SANITARY, AND DRAINAGE SERVICE CONNECTIONS SHALL BE DETERMINED DURING CONSTRUCTION, IN CONSULTATION WITH CITY.

11. THE LIMITS OF BELOW GRADE EXCAVATIONS FOR NEW PIPELINES OR STRUCTURES ARE APPROXIMATE. ACTUAL HORIZONTAL AND VERTICAL LIMITS INCLUDING MEASUREMENT FOR THE NEW WORK SHALL BE APPROVED BY THE ENGINEER DURING CONSTRUCTION.

12. INTERRUPTIONS OF SERVICES SHALL NOT BE PERMITTED. THE CONTRACTOR SHALL COORDINATE WITH ALL UTILITIES AND PROVIDE ALL TEMPORARY UTILITIES AND CONNECTIONS TO AVOID INTERRUPTIONS OF WATER, SANITARY, DRAINAGE, ELECTRIC, PHONE, GAS, FIBEROPTICS, AND CABLE SERVICES.

13. THE CONTRACTOR SHALL COMPLY WITH THE STATE DEPARTMENT OF HEALTH SERVICES CRITERIA FOR THE SEPARATION OF WATER MAINS AND SANITARY SEWERS.

14. PRIOR TO BEGINNING WORK THE CONTRACTOR SHALL FIELD VERIFY EXISTING CONDITIONS INFORMATION AND REPORT ANY DISCREPANCIES BETWEEN THE PLANS AND THE ACTUAL CONDITIONS TO THE ENGINEER.

15. THE CONTRACTOR SHALL PROVIDE ALL EROSION AND SEDIMENT CONTROL DEVICES, AND SHALL NOT COMMENCE CONSTRUCTION UNTIL THESE MEASURES HAVE BEEN INSTALLED AND APPROVED BY THE ENGINEER.

16. THE CONTRACTOR SHALL PROTECT ALL TRAVELED WAYS FROM DUST AND CONSTRUCTION DEBRIS AT ALL TIMES.

17. UNLESS OTHERWISE INDICATED ON THE DRAWINGS ALL AREAS ADJACENT TO THE LIMITS OF CONSTRUCTION WHICH ARE DISTURBED DURING CONSTRUCTION SHALL BE RESTORED BY THE CONTRACTOR TO THEIR ORIGINAL CONDITION AT NO ADDITIONAL COST TO THE OWNER.

18. THE CONTRACTOR SHALL REMOVE AND DISPOSE OF ALL DEMOLISHED MATERIALS, RUBBISH, EXCAVATED MATERIAL AND DEBRIS, UNLESS OTHERWISE NOTED, AND IN ACCORDANCE WITH ALL LOCAL, STATE AND FEDERAL REQUIREMENTS HAVING JURISDICTION. THE CONTRACTOR SHALL BE RESPONSIBLE FOR OBTAINING AND PAYING FOR ALL DISPOSAL PERMITS AT NO ADDITIONAL COST TO THE OWNER.

19. THE CONTRACTOR MAY BE ASKED BY THE OWNER TO SUSPEND CONSTRUCTION OPERATIONS TEMPORARILY TO AVOID CONFLICTS WITH LARGE PUBLIC EVENTS OR LARGE STORM EVENTS. THE CONTRACTOR SHALL NOT BE COMPENSATED FOR COSTS RELATING TO SHUTDOWNS FOR THESE REASONS.

20. THE CONTRACTOR SHALL NOT BLOCK ACCESS TO STREET AND PRIVATE PARKING IN THE VICINITY OF THE LIMITS OF CONSTRUCTION AFTER WORK HOURS AND ON WEEKENDS.

21. THE CONTRACTOR SHALL BE RESPONSIBLE FOR SNOW PLOWING AND SNOW REMOVAL FROM ALL AREAS WHERE HIS PRESENCE IS MAINTAINED INCLUDING BUT NOT LIMITED TO, UNPAVED SURFACES, PARKED EQUIPMENT AREAS OR ANY CONSTRUCTION ACTIVITY. THE CONTRACTOR SHALL ALSO BE RESPONSIBLE FOR STREET SWEEPING, SNOW REMOVAL FROM SIDEWALKS, TRASH REMOVAL, AND RECYCLABLE MATERIALS FROM ALL AREAS WHERE CONSTRUCTION RESTRICTS VEHICULAR OR PEDESTRIAN ACCESS TO STREETS OR SIDEWALKS AND WHERE CONTRACTOR'S PRESENCE INTERFERES WITH MUNICIPAL TRASH REMOVAL, STREET SWEEPING, OR SNOW PLOWING AND REMOVAL.

22. AREAS WITHIN THIS CONTRACT ARE SUBJECT TO THE UTILITY RELATED ABATEMENT MEASURE REGULATIONS OF THE MASSACHUSETTS CONTINGENCY PLAN 310 CMR 40.00 AND THE SPECIFICATIONS. THE CONTRACTOR'S ATTENTION IS SPECIFICALLY DIRECTED TO ENVIRONMENTAL DATA (SOIL AND GROUND WATER) FROM BORINGS AND MONITORING WELLS AS REPRESENTATIVE OF SUBSURFACE CONDITIONS IN URBAN AREAS. REFER TO ENVIRONMENTAL DATA WITHIN THE SPECIFICATION.

23. THE CONTRACTOR SHALL NOT BE PERMITTED TO STARTUP OR OPERATE EQUIPMENT BEFORE OR AFTER ESTABLISHED WORKING HOURS OF 7:00 AM TO 4:00 PM, MONDAY THROUGH FRIDAY WITHOUT APPROVAL OF THE OWNER. WORK HOURS MAY BE RESTRICTED FROM 9:00 AM TO 3:00 PM AS DICTATED BY OWNER ON A DAY TO DAY BASIS. CONTRACTOR TO COORDINATE WITH OWNER FOR TUNNELING OPERATION ALLOWABLE HOURS.

24. EXISTING CONDITIONS ARE SHOWN SCREENED. ALL EXISTING SEWER AND DRAIN PIPE SIZES AND MATERIALS SHALL BE DICTATED BY PROFILE OVER PLAN ANNOTATION.

25. ALL EXISTING SEWER AND DRAIN PIPE REPLACED BY PROPOSED SEWER AND DRAIN PIPE SHALL BE REMOVED, UNLESS OTHERWISE INDICATED ON THE DRAWINGS TO BE ABANDONED.

26. CONTROLLED DENSITY FILL (CDF) SHALL BE REQUIRED FOR ALL UTILITY CROSSINGS WITH CLEARANCE LESS THAN 12 INCHES.

27. CONTROLLED DENSITY FILL (CDF) SHALL NOT BE USED AROUND WATER MAIN, WATER VALVES OR VALVE BOXES. PROVIDE ACCEPTABLE PROTECTIVE LAYER BETWEEN DUCTILE IRON AND CONTROLLED LOW STRENGTH MATERIAL AND USE A NON-FLY ASH MATERIAL APPROVED BY THE ENGINEER.

28. STRUCTURAL REPAIRS TO EXISTING PIPES SHALL BE COMPLETED PRIOR TO INSTALLATION OF NEW SEWER OR DRAIN AND NEW OR REPLACEMENT LATERAL CONNECTIONS TO THE EXISTING MAIN.

29. ALL STREET EXCAVATIONS SHALL BE COMPLETELY CLOSED AT THE END OF EACH WORKING DAY BY BACKFILLING AND TEMPORARY PAVING OR BY COVERING WITH STEEL PLATES WHEN APPROVED BY THE OWNER.

30. EXISTING UTILITY POLES THAT FALL WITHIN 5 FEET OF THE PROPOSED EDGE OF TRENCH SHALL BE SUPPORTED BY THE UTILITY OWNER DURING EXCAVATION OF THE TRENCH. CONTRACTOR SHALL COORDINATE SUPPORT AND BE RESPONSIBLE FOR COSTS AND FEES. WHERE EXISTING GAS, ELECTRIC AND TELECOM UTILITIES CROSS THE PROPOSED TRENCH LIMITS, CONTRACTOR SHALL COORDINATE WITH THE UTILITY OWNER TO SUPPORT AND BE RESPONSIBLE FOR COSTS AND FEES. CONTRACTOR SHALL BE RESPONSIBLE FOR SUPPORTING THE EXISTING UTILITY IN

CIVIL GENERAL NOTES (CONTINUED)

ACCORDANCE WITH THE UTILITY OWNER'S REQUIREMENTS.

31. SPECIFIC DETAIL CALLOUTS MAY NOT BE INCLUDED WITHIN THE DRAWING SET. THE CONTRACTOR SHALL REFERENCE DETAILS ON CG SHEETS AS APPLICABLE WHEN A DETAIL CALLOUT HAS NOT BEEN INCLUDED.

32. WHEN ABANDONED UTILITIES ARE IN CONFLICT WITH PROPOSED WORK THE CONTRACTOR SHALL COORDINATE WITH THE UTILITY OWNER AND THE CONTRACTOR SHALL REMOVE AND DISPOSE AS NECESSARY.

33. MANHOLE INVERT ELEVATIONS DEPICTED IN PROFILE ARE BASED ON RECORD INFORMATION AND ARE TO BE VERIFIED IN THE FIELD PRIOR TO CONSTRUCTION. WHERE DISCREPANCIES EXIST BETWEEN THE SURVEY ELEVATIONS IN THE PLAN AND THE ELEVATIONS DEPICTED IN THE PROFILE, THE PROFILE ELEVATIONS SHALL DICTATE.

34. THE CONTRACTOR SHALL LOCATE AND RECONNECT ALL ACTIVE SANITARY SEWER LATERALS.

GUIDELINES FOR WORKING AROUND GAS UTILITIES

1. NATIONAL GRID REQUESTS AT LEAST SIX (6) WEEKS ADVANCED NOTIFICATION PRIOR TO THE START OF CONSTRUCTION TO PERFORM SCHEDULES WORK IN THE PROPOSED PROJECT AREA. BE AWARE THAT SOME GAS WORK CANNOT BE PERFORMED DURING NORMAL HEATING SEASON.

2. CONTRACTOR MUST CALL DIG SAFE TO HAVE GAS MAINS AND SERVICES MARKED OUT BEFORE CONSTRUCTION.

3. CARE MUST BE EXERCISED WHEN SAW CUTTING OVER ANY GAS INFRASTRUCTURE, ESPECIALLY SERVICES, WHICH ARE MORE SHALLOW THAN THE MAIN.

4. DEPTH OF GAS MAINS VARY. CONTRACTOR SHALL DIG TEST PITS IN ORDER TO ASCERTAIN EXACT LOCATIONS, COVER AND INVERT ELEVATIONS, CLEARANCES, ALIGNMENT AND OPERATING STATUS OF EXISTING GAS FACILITIES.

5. CONTRACTOR SHALL EXERCISE EXTREME CAUTION WHEN EXCAVATING IN THE VICINITY OF ANY GAS FACILITY. HAND EXCAVATION SHALL BE PERFORMED TO LOCATE ALL GAS FACILITIES AND WHENEVER DIGGING WITHIN 24" OF GAS FACILITIES.

6. IF COVER OVER GAS PIPING IS REMOVED THE REQUIRED COVER MUST BE REPLACED, OR IF NOT FEASIBLE, NATIONAL GRID MUST BE NOTIFIED FOR REVIEW OF THE ISSUE.

7. UNDERMINED GAS PIPE MUST BE ADEQUATELY SUPPORTED AND PROTECTED FROM DAMAGE.

8. SIGNIFICANT VIBRATION FROM PILE DRIVING AND SUCH MAY NEGATIVELY IMPACT GAS FACILITIES, PARTICULARLY CAST IRON MAINS AND REGULATOR STATION VAULTS. CONTACT NATIONAL GRID ENGINEERS PRIOR TO PERFORMING SUCH ACTIVITIES AS WELL AS OPERATION WHICH MAY UNDERMINE GAS FACILITIES SUCH AS MICRO-TUNNELING, JACKING, DIRECTIONAL DRILLING, ETC.

9. GAS MAINS AND SERVICES ARE MADE OF SEVERAL DIFFERENT MATERIALS AND CONTAIN A WIDE RANGE OF PRESSURES. TYPICAL MATERIALS USED FOR BURIED GAS PIPE INCLUDES BASE STEEL, PLASTIC, CAST IRON, WROUGHT IRON, DUCTILE IRON, AND COPPER. NEVER ASSUME THAT A PIPE IS NOT GAS. AT TIMES GAS LINES ARE INSERTED INTO OLDER LINES TO SAVE EXCAVATION COST.

10. IF ANY GAS MAINS OR SERVICES BECOME EXPOSED, NATIONAL GRID MUST BE NOTIFIED TO INSPECT THE LINE BEFORE BACKFILLING. ANY DAMAGE THAT MAY HAVE BEEN MADE TO THE PIPE OR PIPE COATING WILL NEED TO BE REPAIRED BY NATIONAL GRID BEFORE BACKFILLING. CONTACT THE NATIONAL GRID DISPATCH OFFICE AT (877) 304-1203 FOR INSPECTION. IT IS IMPORTANT THAT EVEN MINOR DAMAGE OR SCRAPES BE REPORTED TO NATIONAL GRID. BACKFILL SHALL BE 6" OF SAND AROUND THE GAS LINE AND CLEAN COMPACTED FILL ABOVE.

11. GAS REGULATOR STATIONS ARE PARTICULARLY CRITICAL FACILITIES AND NATIONAL GRID MUST BE NOTIFIED WHENEVER WORK IS TO TAKE PLACE WITHIN 200 FEET OF A STATION. REGULATOR STATIONS ARE TYPICALLY IN BURIED VAULTS ACCESSED THROUGH EITHER MANHOLE COVERS OR ALUMINUM DOORS. ONLY AUTHORIZED NATIONAL GRID EMPLOYEES SHALL OPEN REGULATOR STATION VAULTS. BE AWARE THAT A COMPLEX NEST OF PIPING AND VALVES OFTEN EXISTS IN THE VICINITY OUTSIDE THE VAULTS.

12. ACCESS TO GAS VALVES MUST BE MAINTAINED THROUGHOUT CONSTRUCTION AND LEFT AT GRADE AT THE END OF CONSTRUCTION. SHOULD VALVE BOXES BE DAMAGED AND NEED TO BE REPLACED NATIONAL GRID WILL SUPPLY REPLACEMENTS UPON REQUEST. NEVER OPERATE A GAS VALVE. ONLY NATIONAL GRID SHALL OPERATE GAS VALVES.

13. ADEQUATE CLEARANCE MUST BE PROVIDED WHEN INSTALLING OTHER UTILITIES, FOUNDATIONS, STRUCTURES, ETC. CONTACT A NATIONAL GRID ENGINEER FOR GUIDANCE.

SURVEYING NOTES

1. DESIGN DRAWINGS PREPARED FROM AN EXISTING CONDITIONS TOPOGRAPHIC SURVEY CONDUCTED BY SURVEYING AND MAPPING CONSULTANTS (SMC) BETWEEN JUNE AND NOVEMBER 2018.

2. THE SURVEY HAS BEEN COMPILED FROM GROUND CONTROL SURVEYS USING GLOBAL POSITIONING SYSTEM (GPS) TECHNOLOGY TO DETERMINE THE COORDINATES AND ELEVATIONS OF AERIAL TARGETS. AIRCRAFT EQUIPPED WITH AIRBORNE GPS (AGPS) CAPABILITY OBTAINED DIGITAL COLOR AERIAL IMAGERY OF THE TARGETS.

3. COORDINATES, IN U.S. SURVEY FEET, ARE IN THE MASSACHUSETTS STATE PLANE COORDINATE SYSTEM (MCS), MAINLAND ZONE, REFERENCED TO THE NORTH AMERICAN DATUM OF 1983, (NAD 83/2011, EPOCH 2010.00), BASED ON THE KeyNet GPS VIRTUAL REFERENCE SYSTEM (VRS) USING TRIMBLE R10 GNSS GPS RECEIVERS.

4. ELEVATIONS, IN U.S. SURVEY FEET, ARE BASED ON THE KeyNet GPS VIRTUAL REFERENCE SYSTEM (VRS) USING TRIMBLE R8 GNSS GPS RECEIVERS AND ARE SET TO THE NORTH AMERICAN VERTICAL DATUM OF 1988 (NAVD88) THEN CONVERTED TO LYNN CITY BASE. ALL ELEVATIONS ARE DEPICTED IN LYNN CITY BASE.

5. SUBSURFACE UTILITY LINES AND FEATURES, AS SHOWN HEREON, WERE COMPILED FROM FIELD EVIDENCE AND/OR AVAILABLE RECORD INFORMATION (SEE REFERENCES), AND THEIR LOCATIONS ARE ONLY APPROXIMATE. ACTUAL LOCATIONS MUST BE DETERMINED IN THE FIELD. SMC ASSUMES NO RESPONSIBILITY FOR DAMAGES INCURRED AS A RESULT OF UTILITIES OMITTED OR INACCURATELY SHOWN.
BEFORE DESIGNING FUTURE CONNECTIONS, THE APPROPRIATE UTILITIES MUST BE CONSULTED.
BEFORE CONSTRUCTION, ALL UTILITIES, PUBLIC AND PRIVATE, MUST BE NOTIFIED (SEE MASSACHUSETTS GENERAL LAWS, CHAPTER 82 SECTION 40).
CALL "DIG SAFE" 1-888-DIG-SAFE. (888-344-7233).

6. PROPERTY LINES SHOWN ARE TAKEN FROM GIS DATA AND ARE APPROXIMATE ONLY.

BY: HALSTEAD, ZACHARY
PLOT DATE: Thursday, July 25, 2019
DWG FILE: C:\pwworkdir\d0537423\PHASE 3_BSS_CG-01.dwg

REV	DATE	BY	DESCRIPTION

SCALE: NO SCALE

WARNING: 0 ½ 1 — IF THIS BAR DOES NOT MEASURE 1" THEN DRAWING IS NOT TO SCALE

DATE: JULY 31, 2019
DRAWN BY: A KALELE
DESIGNED BY: Z HALSTEAD
CHECKED BY:
APPROVED BY:

60% DESIGN
NOT FOR CONSTRUCTION

This document is an interim document and not suitable for construction. As an interim document, it may contain data that is potentially inaccurate or incomplete and is not to be relied upon without the express written consent of the preparer.

Stantec

LYNN WATER & SEWER COMMISSION

LYNN WATER AND SEWER COMMISSION

PHASE 3 WEST LYNN SEWER SEPARATION

CIVIL GENERAL NOTES

SHEET CG-01

195130174

EXISTING LEGEND

B1	BORING LOCATION AND NUMBER (AA-99)
	BUSH
	CABLE TELEVISION MANHOLE
CATV	CABLE TELEVISION LINE
CB	CATCH BASIN
	DECIDUOUS TREE
SD	DRAIN LINE
DMH	DRAIN MANHOLE
EHH	ELECTRIC HANDHOLE
UGE	ELECTRIC LINE
EMH	ELECTRIC MANHOLE
	EVERGREEN TREE
	FENCE
FA	FIRE ALARM BOX
FL	FLOOD LIGHT
GG	GAS GATE
G	GAS LINE
GP	GUARD POST (BOLLARD)
	GUY WIRE
HH	HANDHOLE
HYD	HYDRANT
LP	LIGHT POLE
LPB	LIGHT POLE WITH BASE
MW	MONITORING WELL
	PK., NAIL, SPIKE
S	SEWER LINE
SMH	SEWER MANHOLE
	SIGN
SB	STONE BOUND
SB/DH	STONE BOUND WITH DRILL HOLE
UGT	TELEPHONE LINE
TMH	TELEPHONE MANHOLE
TS	TRAFFIC SIGNAL
SG	TRAFFIC SIGNAL LINE
TSMAP	TRAFFIC SIGNAL/MAST ARM POST
	TREE LINE
	UNKNOWN MANHOLE
UP#	UTILITY POLE
UP/LP	UTILITY POLE/LIGHT POLE
WG	WATER GATE
W	WATER LINE
	WATER MANHOLE
T	COMMUNICATION LINE
X X X	CHAIN LINK FENCE
OHW	OVERHEAD WIRE
25	EXISTING CONTOUR
	PROPERTY LINE

PROPOSED LEGEND

D	DRAIN MANHOLE
	CATCH BASIN
	CATCH BASIN, DOUBLE
S	SEWER MANHOLE
	DROP INLET
TP	TEST PIT
	HYDRANT
	WATER MAIN
	PIPE
	LAUNCHING/RECEIVING PIT FOR TUNNELING

MISCELLANEOUS

A	SHEET KEY NOTES
ø	ROUND OR DIAMETER
@	AT
∠	ANGLE / BEND
℄	CENTERLINE
	NORTH ARROW. ALL DISCIPLINES DISPLAY TRUE NORTH. PLANT NORTH DEPICTED FOR TANK ORIENTATION AS NECESSARY
X-XX	SHEET MARKER
	SOIL BORING CONDUCTED 2018-2019
	SOIL BORING AND MONITORING WELL CONDUCTED 2018-2019

REFERENCE SYMBOLS

SECTION IDENTIFICATION

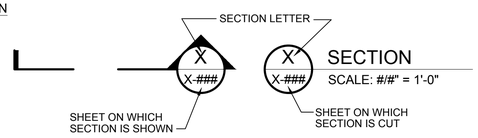

DETAIL IDENTIFICATION

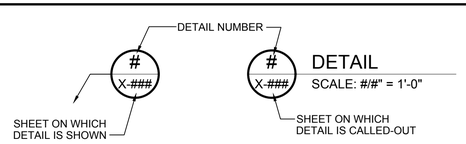

STANDARD DETAIL IDENTIFICATION

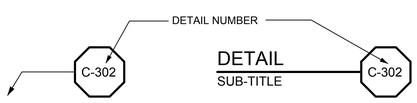

STANDARD DETAILS ARE LOCATED ON DISCIPLINE GENERAL SHEETS, IN NUMERICAL ORDER

CIVIL ABBREVIATIONS

ABAND	ABANDONED
APPROX	APPROXIMATE
AVE	AVENUE
AVR	AIR RELEASE MH
B	BORING
BCC	BITUMINOUS CONCRETE CURB
BIT CONC	BITUMINOUS CONCRETE
BS	BRUSHED STEEL PIPE
CATV	CABLE TELEVISION
CB	CATCH BASIN
CC	CONCRETE CURB
CDF	CONTROLLED DENSITY FILL
CI	CAST IRON
CICL	CAST IRON - CEMENT LINED PIPE
CL	CENTERLINE
CLF	CHAIN LINK FENCE
CONC	CONCRETE
CMH	COMBINED SEWER MANHOLE
CMP	CORRUGATED METAL PIPE
CPP	CORRUGATED PLASTIC PIPE
CS	COATED STEEL OR COMBINED SEWER
CT	COURT
CU	CONTINUATION UNDETERMINED
DI	DUCTILE IRON
DMH	DRAIN MANHOLE
DSMH	DROP SEWER MANHOLE
DICL	DUCTILE IRON - CEMENT LINED
E	EAST OR ELECTRIC
EG	EXISTING GRADE
EL / ELEV	ELEVATION
EMH	ELECTRIC MANHOLE
EXIST	EXISTING
FG	FINISHED GRADE
FND	FOUND
FM	FORCE MAIN
G	GAS
GC	GRANITE CURB
GR	GRASS
GG	GAS GATE
GP	GUARD POST
HDPE	HIGH DENSITY POLYETHYLENE
I / INV	INVERT
ID	INNER DIAMETER
L	LENGTH OR LEFT
LF	LINEAR FOOT
(M)	MARKED IN FIELD
MH	MANHOLE
MHW	MEAN HIGH WATER
MLW	MEAN LOW WATER
MIN	MINIMUM
MW	MONITORING WELL
MWRA	MASSACHUSETTS WATER RESOURCE AUTHORITY
N	NORTH
NPV	NO PIPE VISIBLE
OD	OUTSIDE DIAMETER
OHW	OVERHEAD WIRES
PCI	PIT CAST IRON PIPE
PIF	PICKET FENCE
PL	PLASTIC PIPE OR PLACE
PROP	PROPOSED
PVC	POLYVINYL CHLORIDE
R	RIGHT OR RIM
(R)	RECORD
R&R	REMOVE AND REPLACE
RD	ROAD
RCP	REINFORCED CONCRETE PIPE
S	SOUTH OR SLOPE
SD	STORM DRAIN
SMH	SEWER MANHOLE
SPEC	SPECIFICATIONS
SS	SANITARY SEWER
ST	STREET
STA	STATION
SBCC	SLOPED BITUMINOUS CONCRETE CURB
T / TEL	TELECOM
TOS	TOP OF SILT
TOW	TOP OF WATER
TRANSF	TRANSFORMER
TYP	TYPICAL
TSCC	TRAFFIC SIGNAL CONTROL CABINET
U/G	UNDERGROUND
UNKG	UNKNOWN GATE
UNK	UNKNOWN
VCP	VITRIFIED CONCRETE PIPE OR VITREOUS CLAY PIPE
W	WEST
WG	WATER GATE
WIF	WROUGHT IRON FENCE
W/	WITH

BY: HALSTEAD, ZACHARY

PLOT DATE: Thursday, July 25, 2019

DWG FILE: C:\pwworkdir\d0537423\PHASE 3_BSS_CG-02.dwg

REV	DATE	BY	DESCRIPTION

SCALE: NO SCALE

WARNING: 0 ½ 1 — IF THIS BAR DOES NOT MEASURE 1" THEN DRAWING IS NOT TO SCALE

DATE: JULY 31, 2019
DRAWN BY: A KALELE
DESIGNED BY: Z HALSTEAD
CHECKED BY:
APPROVED BY:

60% DESIGN
NOT FOR CONSTRUCTION

This document is an interim document and not suitable for construction. As an interim document, it may contain data that is potentially inaccurate or incomplete and is not to be relied upon without the express written consent of the preparer.

Stantec

LYNN WATER & SEWER COMMISSION

LYNN WATER AND SEWER COMMISSION

PHASE 3 WEST LYNN SEWER SEPARATION

CIVIL GENERAL
LEGEND AND ABBREVIATIONS

SHEET CG-02

195130174

A. FLEXIBLE PIPE REFERS TO ALL STEEL, DUCTILE-IRON, AND PLASTIC PIPES.

B. TYPICAL TRENCH SECTIONS (I, II AND III) ARE TO BE USED ONLY WHERE STABLE, COMPACT SOIL CONDITIONS EXIST. IF BOULDERS OR LARGE OBSTRUCTIONS ARE ENCOUNTERED, TRENCH SECTIONS MAY BE DEEPER OR WIDER THAN SHOWN. THE ENGINEER SHALL BE ADVISED SHOULD THIS OCCUR.

C. TYPICAL TRENCH SECTION TYPE I SHALL BE USED WITHIN PUBLIC RIGHT OF WAY. TYPE II AND III, MAY BE USED WITHIN LANDSCAPE PARCELS WHERE APPROVED BY ENGINEER.

D. THE NEED FOR PROTECTIVE SYSTEMS AND EXCAVATION SLOPES SHALL BE DETERMINED CONSIDERING APPLICABLE LOCAL, STATE AND FEDERAL (OSHA) SAFETY STANDARDS AND REGULATIONS, AND GEOTECHNICAL CONSULTANTS' RECOMMENDATIONS.

E. PROTECTIVE SYSTEMS SHALL BE DESIGNED AND BUILT IN ACCORDANCE WITH THE APPLICABLE LOCAL, STATE AND FEDERAL (OSHA) SAFETY STANDARDS AND REGULATIONS.

F. SUPPORTING DOCUMENTATION SHALL BE SUBMITTED TO THE ENGINEER REGARDING PIPE DESIGN AND COMPLIANCE WITH APPLICABLE LOCAL, STATE AND FEDERAL (OSHA) SAFETY STANDARDS.

G. UNSUPPORTED VERTICAL AND/OR SLOPING TRENCH WALL SLOPES SHALL NOT BE STEEPER THAN ALLOWED BY APPLICABLE LOCAL, STATE AND FEDERAL (OSHA) SAFETY STANDARDS AND REGULATIONS, UNLESS SUPPORTING DOCUMENTATION IS SUBMITTED, ACCORDING TO AFOREMENTIONED SAFETY STANDARDS.

H. TRENCH SECTIONS OTHER THAN THE TYPICAL SECTIONS SHOWN MAY BE UTILIZED PROVIDED THEY COMPLY WITH APPLICABLE LOCAL, STATE AND FEDERAL (OSHA) SAFETY STANDARDS AND REGULATIONS. DOCUMENTATION SUPPORTING THIS COMPLIANCE AND PIPE DESIGN CALCULATIONS SHALL BE SUBMITTED TO THE ENGINEER.

I. IF OVER-EXCAVATION DUE TO POOR FOUNDATION MATERIAL IS ORDERED BY THE ENGINEER, THE BACKFILL MATERIAL SHALL BE ACCORDING TO THE EARTHWORK SECTION OF THE SPECIFICATIONS ARTICLE ENTITLED, "FILL AND BACKFILL MATERIAL REQUIREMENTS."

J. IF DURING CONSTRUCTION, THE WATER TABLE IS DISCOVERED TO BE ABOVE THE TRENCH BOTTOM, THE ENGINEER SHALL BE NOTIFIED, AND APPROPRIATE DEWATERING SHALL BE IMPLEMENTED TO LOWER THE WATER LEVEL BELOW THE TRENCH BOTTOM. THE BACKFILL MATERIAL SHALL BE ACCORDING TO THE EARTHWORK SECTIONS OF THE SPECIFICATIONS, OR AS ORDERED BY THE ENGINEER.

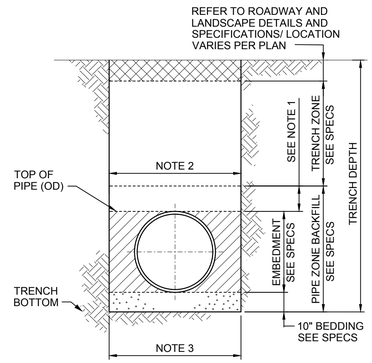

TRENCH SECTION - TYPE I

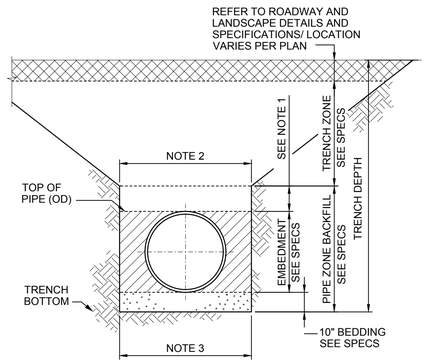

TRENCH SECTION - TYPE II

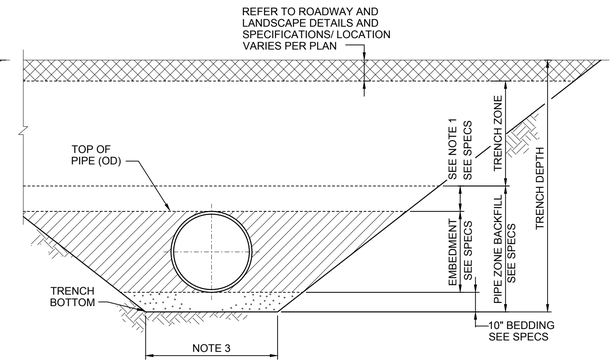

TRENCH SECTION - TYPE III

NOTES:

1. 6" MIN FOR PIPE DIAMETER < 24"
   12" MIN FOR PIPE DIAMETER > 24"
2. MAX TRENCH WIDTH @ TOP OF PIPE:
   OD + 36" FOR, 18" & LARGER PIPE OD
   OD + 24" FOR LESS THAN 18"
3. MIN TRENCH BOTTOM WIDTH =
   OD + 24" FOR MECHANICAL COMPACTION

TRENCH SECTION FLEXIBLE PIPE > 6"

C-601

A. RIGID PIPE REFERS TO ALL TYPES OF REINFORCED AND UN-REINFORCED CONCRETE PIPE AND VITRIFIED CLAY PIPE.

B. TYPICAL TRENCH SECTIONS (I, II AND III) ARE TO BE USED ONLY WHERE STABLE, COMPACT SOIL CONDITIONS EXIST. IF BOULDERS OR LARGE OBSTRUCTIONS ARE ENCOUNTERED, TRENCH SECTIONS MAY BE DEEPER OR WIDER THAN SHOWN. THE ENGINEER SHALL BE ADVISED SHOULD THIS OCCUR.

C. TYPICAL TRENCH SECTION TYPE I SHALL BE USED WITHIN PUBLIC RIGHT OF WAY. TYPE II AND III, MAY BE USED WITHIN LANDSCAPE PARCELS WHERE APPROVED BY ENGINEER.

D. THE NEED FOR PROTECTIVE SYSTEMS, AND EXCAVATION SLOPES SHALL BE DETERMINED CONSIDERING APPLICABLE LOCAL, STATE AND FEDERAL (OSHA) SAFETY STANDARDS AND REGULATIONS, AND GEOTECHNICAL CONSULTANTS' RECOMMENDATIONS.

E. PROTECTIVE SYSTEMS SHALL BE DESIGNED AND BUILT IN ACCORDANCE WITH THE APPLICABLE LOCAL, STATE AND FEDERAL (OSHA) SAFETY STANDARDS AND REGULATIONS.

F. SUPPORTING DOCUMENTATION SHALL BE SUBMITTED TO THE ENGINEER REGARDING PIPE DESIGN AND COMPLIANCE WITH APPLICABLE LOCAL, STATE AND FEDERAL (OSHA) SAFETY STANDARDS.

G. UNSUPPORTED VERTICAL AND/OR SLOPING TRENCH WALL SLOPES SHALL NOT BE STEEPER THAN ALLOWED BY APPLICABLE LOCAL, STATE AND FEDERAL (OSHA) SAFETY STANDARDS AND REGULATIONS, UNLESS SUPPORTING DOCUMENTATION IS SUBMITTED, ACCORDING TO AFOREMENTIONED SAFETY STANDARDS.

H. IF OVER-EXCAVATION DUE TO POOR FOUNDATION MATERIAL IS ORDERED BY THE ENGINEER, THE BACKFILL MATERIAL SHALL BE ACCORDING TO THE EARTHWORK SECTION OF THE SPECIFICATIONS ARTICLE ENTITLED, "FILL AND BACKFILL MATERIAL REQUIREMENTS."

I. IF DURING CONSTRUCTION, THE WATER TABLE IS DISCOVERED TO BE ABOVE THE TRENCH BOTTOM, THE ENGINEER SHALL BE NOTIFIED, AND APPROPRIATE DEWATERING SHALL BE IMPLEMENTED TO LOWER THE WATER LEVEL BELOW THE TRENCH BOTTOM. THE BACKFILL MATERIAL SHALL BE ACCORDING TO THE EARTHWORK SECTIONS OF THE SPECIFICATIONS, OR AS ORDERED BY THE ENGINEER.

J. TRENCH SECTIONS OTHER THAN THE TYPICAL SECTIONS SHOWN MAY BE UTILIZED PROVIDED THEY COMPLY WITH APPLICABLE LOCAL, STATE AND FEDERAL (OSHA) SAFETY STANDARDS AND REGULATIONS. DOCUMENTATION SUPPORTING THIS COMPLIANCE AND PIPE DESIGN CALCULATIONS SHALL BE SUBMITTED TO THE ENGINEER.

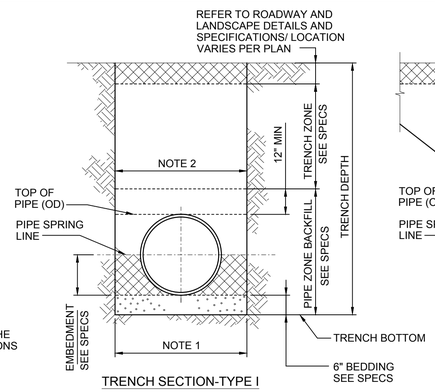

TRENCH SECTION-TYPE I

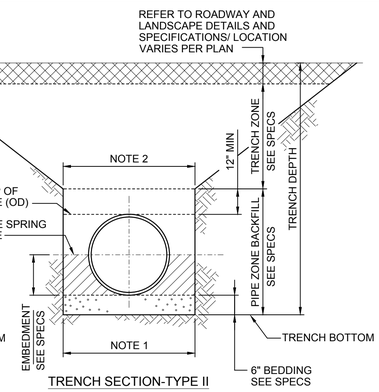

TRENCH SECTION-TYPE II

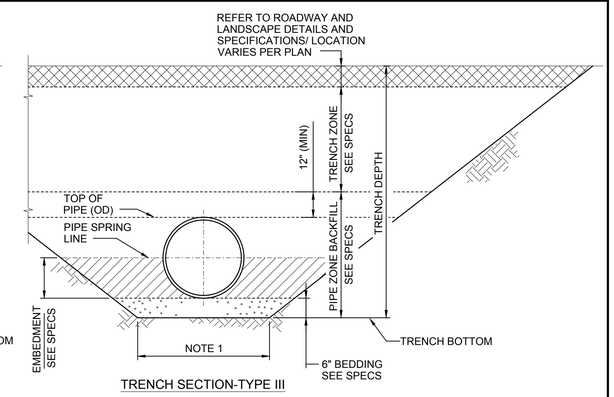

TRENCH SECTION-TYPE III

NOTES:

1. MIN TRENCH BOTTOM WIDTH:
   OD + 24" FOR MECHANICAL COMPACTION
   OD + 18" FOR WATER CONSOLIDATION
2. MAX TRENCH WIDTH @ TOP OF PIPE
   OD + 36" FOR, 18" & LARGER PIPE OD
   OD + 24" FOR LESS THAN 18" PIPE OD

TRENCH SECTION RIGID PIPE> 6"

C-602

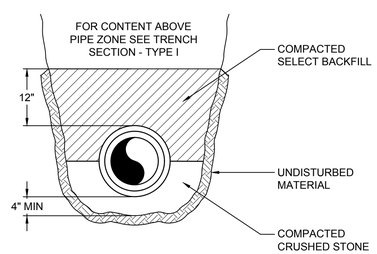

NOTE:

1. ALL FITINGS TO BE PLACED ON WELL CONSOLIDATED GRAVEL

TRENCH SECTION (LWSC) SEWER OR DRAIN LATERAL FOR PIPES ≤ 6"

C-603

REV	DATE	BY	DESCRIPTION

SCALE: NO SCALE

WARNING: 0 ½ 1 — IF THIS BAR DOES NOT MEASURE 1" THEN DRAWING IS NOT TO SCALE

DATE: JULY 31, 2019
DRAWN BY: A KALELE
DESIGNED BY: Z HALSTEAD
CHECKED BY:
APPROVED BY:

60% DESIGN
NOT FOR CONSTRUCTION

This document is an interim document and not suitable for construction. As an interim document, it may contain data that is potentially inaccurate or incomplete and is not to be relied upon without the express written consent of the preparer.

Stantec

LYNN WATER & SEWER COMMISSION

LYNN WATER AND SEWER COMMISSION
PHASE 3 WEST LYNN SEWER SEPARATION
CIVIL GENERAL
STANDARD DETAILS - I

SHEET CG-03

195130174

DWG FILE: C:\pwworkdir\d0537423\PHASE 3_BSS_CG-03.dwg
PLOT DATE: Thursday, July 25, 2019
BY: HALSTEAD, ZACHARY

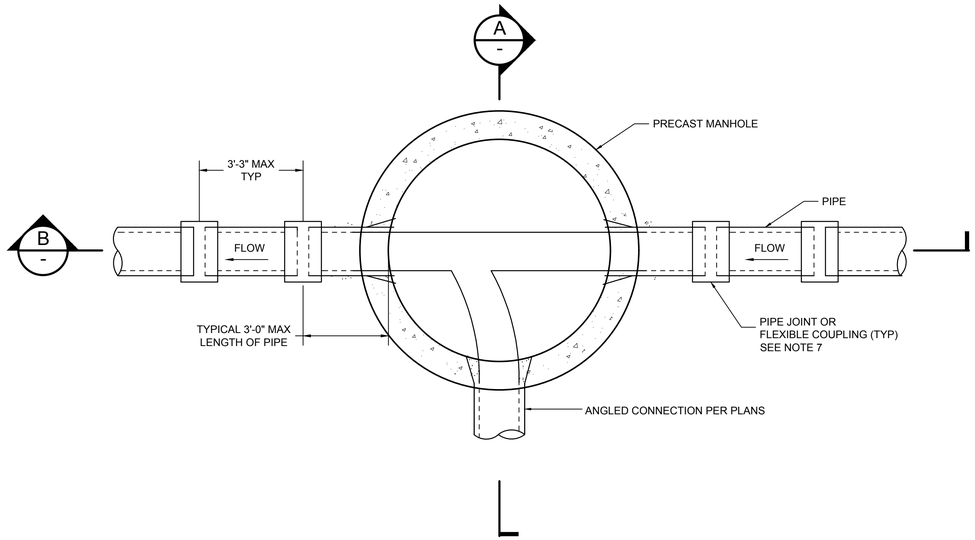

BOTTOM PLAN

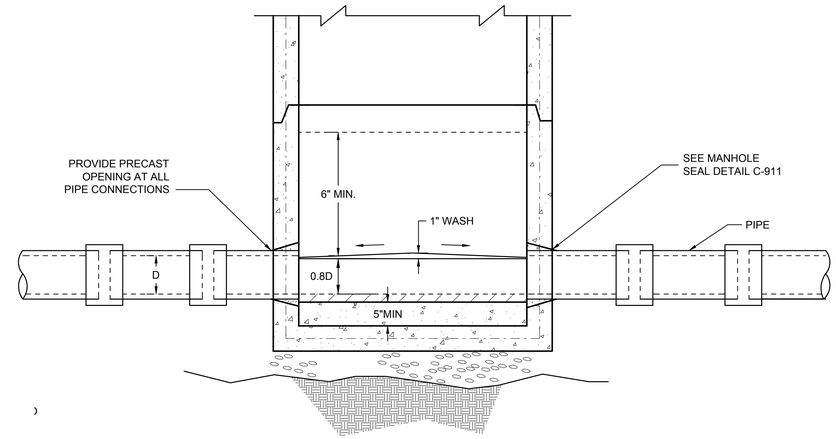

B - SECTION

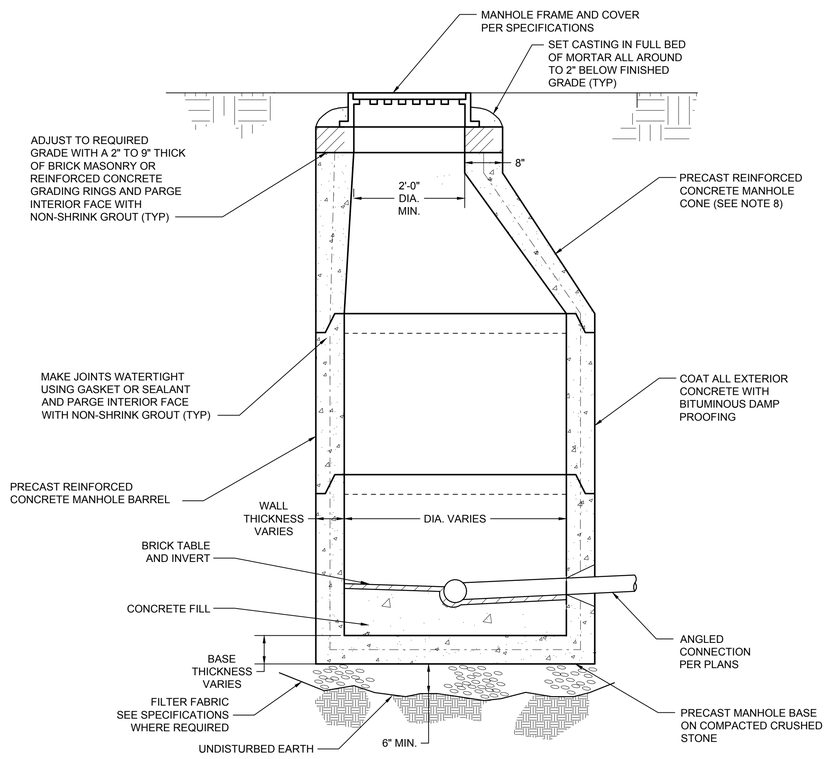

A - SECTION

TABLE 1
PRE-CAST STRUCTURES
MIN. DIMENSION REQUIREMENTS

MANHOLE DIAMETER	SIDE WALL MIN THICKNESS	BOTTOM SLAB MIN THICKNESS	MAX PIPE DIAMETER ALLOWED*	
			RCP	DI/PVC
4'	5"	6"	24"	30"
5'	6"	8"	36"	42"
6'	6"	8"	48"	54"
8'	8"	8"	66"	72"

* MAY VARY DEPENDING ON SIZE AND LOCATION OF ADDITIONAL PENETRATIONS OR RELATIONSHIP OF PENETRATIONS IN MANHOLE.

GENERAL MANHOLE NOTES:

1. INNER EDGE OF BRICK TABLE TO BE AT ELEVATION OF CROWN OF TOP OF PIPE. TABLE TO SLOPE AT 8.3% TO INSIDE OF MANHOLE BASE.
2. SEWER OR DRAIN MANHOLE DIAMETER SHALL BE 4', 5', 6', OR 8' AS SHOWN ON PLAN/PROFILE VIEWS.
3. DESIGN PRECAST SECTIONS WITH FRAME AND COVER FOR AASHTO HS-20 LOADINGS.
4. FOR DESCRIPTION OF MATERIALS, SEE SPECIFICATIONS.
5. MANHOLES LARGER THAN 4' IN DIAMETER AT THE BASE SHALL BE REDUCED IN DIAMETER TO 4' AT TOP RISER SECTION
6. PROVIDE PRECAST THICKNESSES AND OPENINGS PER TABLE 1.
7. WHERE COUPLINGS ARE USED WITHIN 6 FT OF MANHOLE PROVIDE NON-SHIELDED.
8. WHERE SPACE RESTRICTIONS EXIST, USE FLAT SLAB TYPE MANHOLE TOPS.

TYPICAL PRECAST MANHOLE-TYPE 1 (LWSC) C-901

REV	DATE	BY	DESCRIPTION

SCALE: NO SCALE

WARNING: 0 ½ 1 — IF THIS BAR DOES NOT MEASURE 1" THEN DRAWING IS NOT TO SCALE

DATE: JULY 31, 2019
DRAWN BY: A KALELE
DESIGNED BY: Z HALSTEAD
CHECKED BY:
APPROVED BY:

60% DESIGN
NOT FOR CONSTRUCTION

This document is an interim document and not suitable for construction. As an interim document, it may contain data that is potentially inaccurate or incomplete and is not to be relied upon without the express written consent of the preparer.

Stantec

LYNN WATER & SEWER COMMISSION

LYNN WATER AND SEWER COMMISSION

PHASE 3 WEST LYNN SEWER SEPARATION

CIVIL GENERAL
STANDARD DETAILS - II

SHEET
CG-04

195130174

DWG FILE: C:\pwworkdir\d0537423\PHASE 3_BSS_CG-04.dwg
PLOT DATE: Thursday, July 25, 2019
BY: HALSTEAD, ZACHARY

GENERAL SEWER OR DRAIN SERVICE CONNECTION < 12' NOTES:

1. REPLACE EXISTING SERVICE LATERAL TO EXTENT REQUIRED.
2. EXCAVATE AND REMOVE EXISTING LATERAL AS REQUIRED TO ALLOW RECONSTRUCTION.
3. FOR SEWER AND DRAIN SERVICE CONNECTIONS TO MAINLINE 18" DIAMETER OR GREATER AN INSERTA TEE OR EQUAL MAY BE USED.
4. FOR SERVICE CONNECTION > 12' DEEP FROM INVERT OF MAINLINE PIPE TO FINISHED GRADE, SEE CHIMNEY DETAIL.
5. SEWER AND DRAIN LATERALS SHALL BE SIZED TO FIT ANTICIPATED FLOWS BUT SHALL NOT BE LESS THAN 6" FOR SEWER SERVICES AND 12" FOR DRAIN SERVICES.

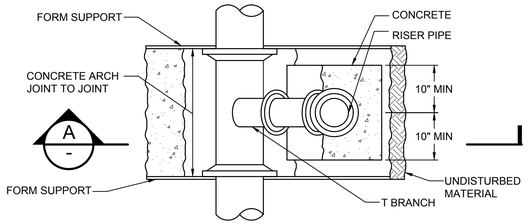

NOTE:

1. TRENCH BACKFILL TO BE PLACED AND COMPACTED CONCURRENTLY TO SAME ELEVATION ON EACH SIDE OF CHIMNEY

PLAN

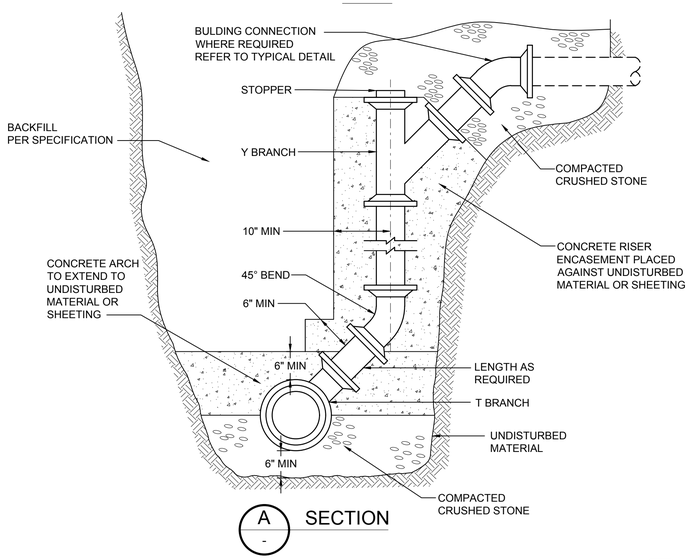

SEWER CHIMNEY (LWSC) C-904

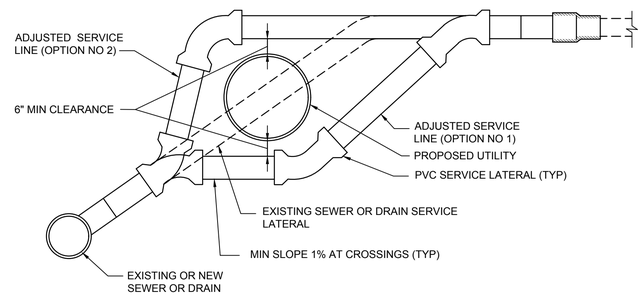

SEWER OR DRAIN SERVICE LATERAL ALIGNMENT AT CROSSING UTILITIES C-905

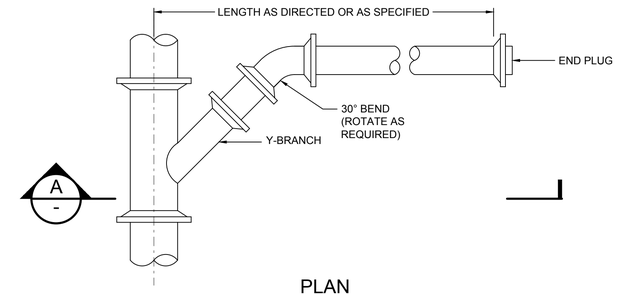

PLAN

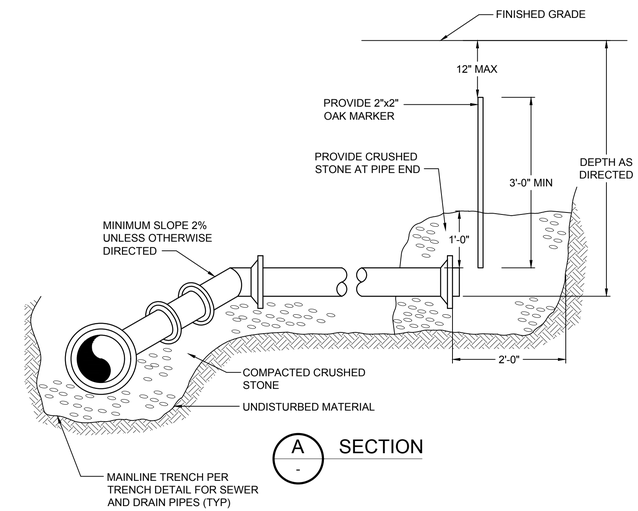

SEWER OR DRAIN LATERAL STUB (LWSC) C-906

BY: HALSTEAD, ZACHARY

PLOT DATE: Thursday, July 25, 2019

DWG FILE: C:\pwworkdir\d0537423\PHASE 3_BSS_CG-05.dwg

REV	DATE	BY	DESCRIPTION

SCALE: NO SCALE

WARNING: 0 ½ 1 — IF THIS BAR DOES NOT MEASURE 1" THEN DRAWING IS NOT TO SCALE

DATE: JULY 31, 2019
DRAWN BY: A KALELE
DESIGNED BY: Z HALSTEAD
CHECKED BY:
APPROVED BY:

60% DESIGN
NOT FOR CONSTRUCTION

This document is an interim document and not suitable for construction. As an interim document, it may contain data that is potentially inaccurate or incomplete and is not to be relied upon without the express written consent of the preparer.

Stantec

LYNN WATER & SEWER COMMISSION

LYNN WATER AND SEWER COMMISSION

PHASE 3 WEST LYNN SEWER SEPARATION

CIVIL GENERAL
STANDARD DETAILS - III

SHEET
CG-05

195130174

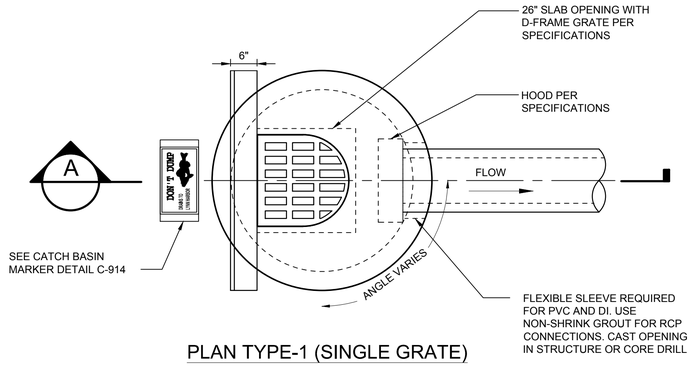

PLAN TYPE-1 (SINGLE GRATE)

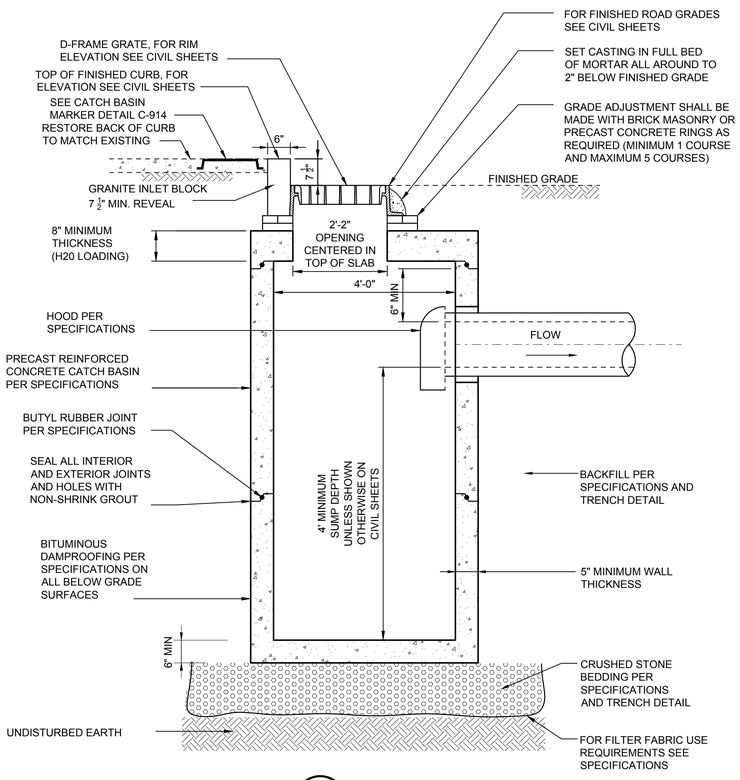

A - SECTION (TYPE 1)

NOTES:

1. CATCH BASIN DIAMETER SHALL BE 4', OR 6' AS SHOWN ON PLAN/PROFILE VIEWS.
2. DESIGN PRECAST SECTIONS WITH FRAME AND COVER FOR AASHTO HS-20 LOADINGS.
3. FOR DESCRIPTION OF MATERIALS, SEE SPECIFICATIONS.
4. OPENING IN TOP MANHOLE SECTION SHALL MATCH CASTING NOMINAL DIAMETER.
5. PROVIDE PRECAST THICKNESSESS AND SIZE FOR OPENINGS PER TABLE 1, DETAIL C-901.
6. IF DEPTH OF COVER IS LESS THAN 36 INCHES, USE DUCTILE IRON.

TYPICAL CATCH BASIN-TYPE 1 (WITH D-FRAME GRATE-SINGLE) — C-907

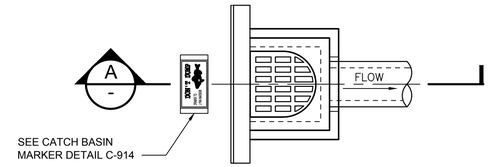

PLAN TYPE-2 (SINGLE GRATE)

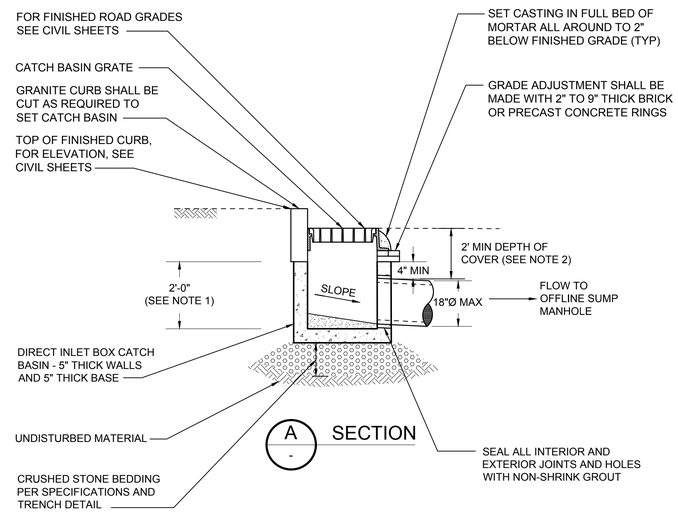

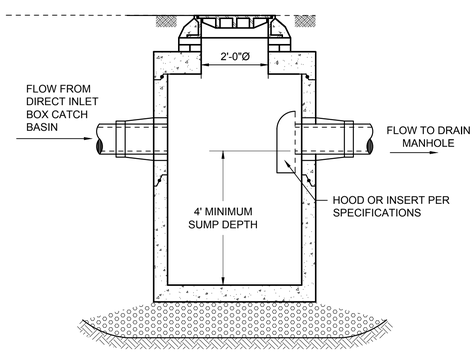

OFFLINE SUMP MANHOLE

NOTES:

1. 18" MIN. ALLOWED WHEN CONFLICT WITH UTILITIES EXISTS AND WITH THE APPROVAL OF THE ENGINEER.
2. WHERE MIN. DEPTH OF COVER CAN NOT BE MET, PROVIDE CLASS 53 DI PIPE OR 6" CDF ENCASEMENT ALL AROUND.
3. SEE DETAIL C-907 & C-901 FOR TYPICAL CATCH BASIN AND MANHOLE REQUIREMENTS.

DROP INLET CATCH BASIN-TYPE 2 — C-908

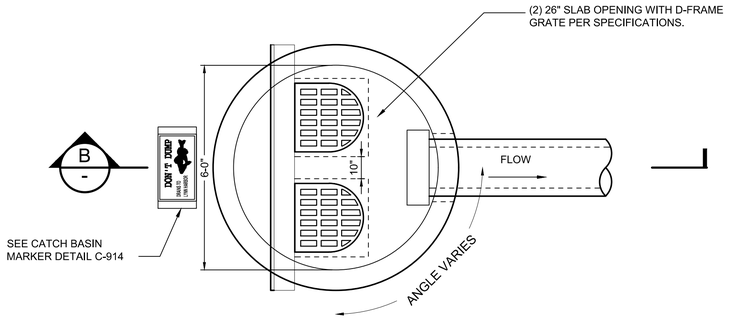

PLAN TYPE-3 (DOUBLE GRATE)

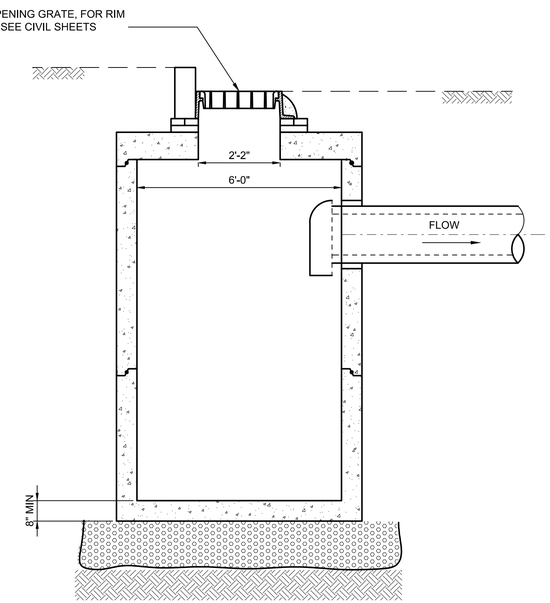

B - SECTION

NOTE:

1. SEE DETAIL C-907 FOR TYPICAL CATCH BASIN REQUIREMENTS.

DOUBLE GRATE CIRCULAR CATCH BASIN-TYPE 3 — C-909

REV	DATE	BY	DESCRIPTION

SCALE: NO SCALE

WARNING: 0 ½ 1 — IF THIS BAR DOES NOT MEASURE 1" THEN DRAWING IS NOT TO SCALE

DATE: JULY 31, 2019
DRAWN BY: A KALELE
DESIGNED BY: Z HALSTEAD
CHECKED BY:
APPROVED BY:

60% DESIGN NOT FOR CONSTRUCTION

This document is an interim document and not suitable for construction. As an interim document, it may contain data that is potentially inaccurate or incomplete and is not to be relied upon without the express written consent of the preparer.

Stantec

LYNN WATER & SEWER COMMISSION

LYNN WATER AND SEWER COMMISSION
PHASE 3 WEST LYNN SEWER SEPARATION
CIVIL GENERAL
STANDARD DETAILS - IV

SHEET CG-06

195130174

DWG FILE: C:\pwworkdir\d0537423\PHASE 3_BSS_CG-06.dwg
PLOT DATE: Thursday, July 25, 2019
BY: HALSTEAD, ZACHARY

EXISTING PIPE MATERIAL		BRICK	RCP	DI	VCP	PLASTIC
NEW PIPE MATERIAL	BRICK	1	1	1	1	1
	RCP	1	1	1	1	1
	DI	1	1	2	2	2
	VCP	1	1	2	2	2
	PLASTIC	1	1	2	2	2

TYPE 1 = PIPE CONNECTION (CAST-IN-PLACE)
TYPE 2 = SHIELDED FLEXIBLE COUPLING

NOTES:

1. PIPE COUPLERS SHALL BE INSTALLED PER THE TABLE ABOVE UNLESS OTHERWISE NOTED.
2. SEE DETAIL C-912 FOR TYPE-1 CONNECTIONS.
3. SEE DETAIL C-913 FOR TYPE-2 CONNECTION.

PIPE CONNECTION TABLE

C-910

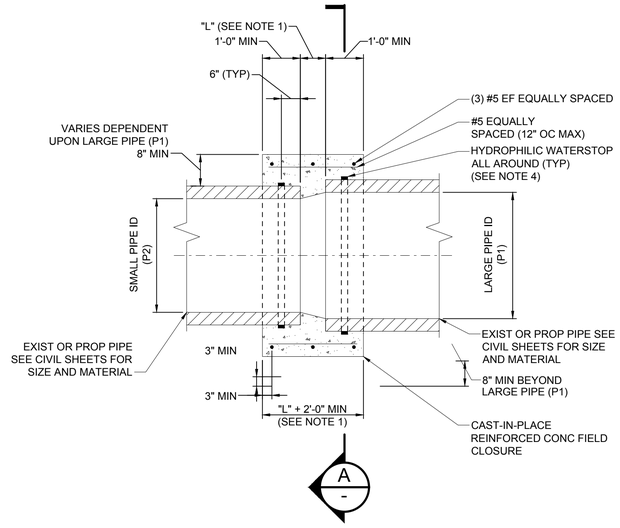

PLAN

NOTES:

1. SPACING BETWEEN PIPES (L) DEPENDS ON PIPE SIZES, FOR PIPES OF THE SAME SIZE USE 4". THE DISTANCE "L" EQUALS THE LARGE PIPE ID MINUS THE SMALL PIPE ID TIMES TWO [L=(P1-P2)x2].
2. WHEN SEWER JOINS ONE OF A LARGER DIAMETER, THE INVERT OF THE LARGER SEWER SHOULD BE LOWERED SUFFICIENTLY TO MAINTAIN THE SAME ENERGY GRADIENT. AN APPROXIMATE METHOD FOR SECURING THESE RESULTS IS TO PLACE THE 0.8 DEPTH POINT OF BOTH SEWERS AT THE SAME ELEVATION. WHEN THE RATIO OF THE SMALLER SEWER TO THE LARGER SEWER IS EQUAL OR GREATER THAN 0.8, THEN IT WILL BE PERMISSIBLE TO MATCH CROWNS.
3. SAND BLAST EXIST PIPE PERIMETER AND APPLY BONDING AGENT PRIOR TO CONCRETE ENCASEMENT.
4. INSTALL HYDROPHILIC WATERSTOP ALONG PIPE PERIMETER FOR EACH PIPE. SEE SPECIFICATIONS.
5. CONCRETE AND REBAR REQUIREMENTS SHALL CONFORM TO CAST-IN-PLACE CONCRETE.
6. LOCATION OF FIELD CLOSURE SHALL BE SUBJECT TO THE ENGINEER'S APPROVAL.
7. MAINTAIN 2" COVER BETWEEN PIPE EXTERIOR AND ALL REINFORCING AND 3" MINIMUM FOR CONCRETE SURFACES SHOWN.

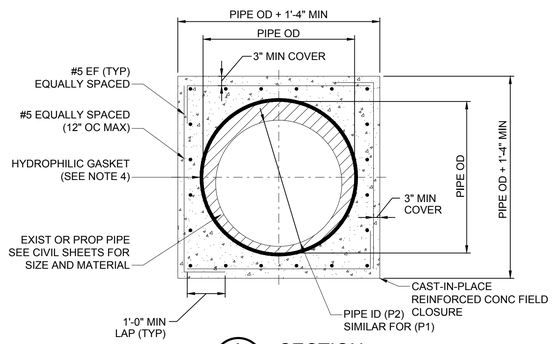

A - SECTION (P1=48" MAX)

CONCRETE FIELD CLOSURE (CAST-IN-PLACE)-TYPE 1

(FOR NON-PRESSURE PIPES OF DIFFERENT MATERIAL OR SIZES)

C-912

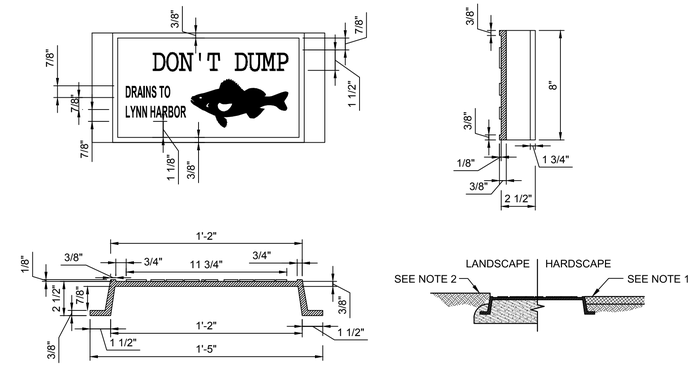

NOTES:

1. WHERE LOCATED IN HARDSCAPE, PLACE MARKER DURING MATERIAL PLACEMENT AND SET TOP OF MARKER FLUSH WITH FINISH SURVACE.
2. WHERE LOCATED IN LANDSCAPE, EMBED MARKER IN 6" CONCRETE BASE AND SET TOP OF MARKER $\frac{1}{2}$" BELOW GROUND SURFACE.

CATCH BASIN DON'T DUMP CURB MARKER

C-914

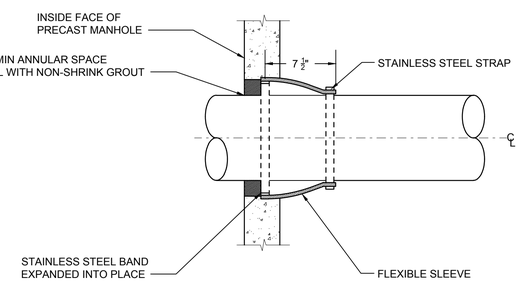

NOTES:

1. PRECAST OPENING OR CORE DRILLED INTO EXISTING STRUCTURE. SIZE VARIES TO ACCOMMODATE EXTENSION BONNET FLANGE DIAMETER OR PIPE.

FLEXIBLE SLEEVE CONNECTION DETAIL

C-911

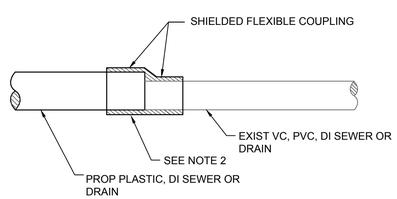

TYPE 2 PIPE FIELD CLOSURE NOTES:

1. FOR ALL GRAVITY MAINS AND LATERAL PIPES (SEWERS OR DRAINS). SEE SPECIFICATION 02622 FOR MATERIALS AND REQUIREMENTS.
2. PROVIDE ECCENTRIC TYPE FOR MAIN LINE COUPLINGS, CONCENTRIC TYPE FOR LATERAL COUPLINGS.

PIPE FIELD CLOSURE (SHIELDED FLEXIBLE COUPLING)-TYPE 2

C-913

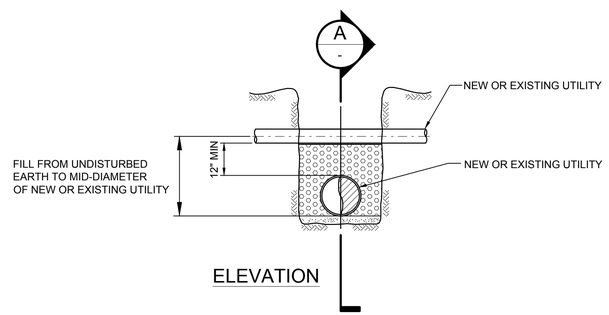

ELEVATION

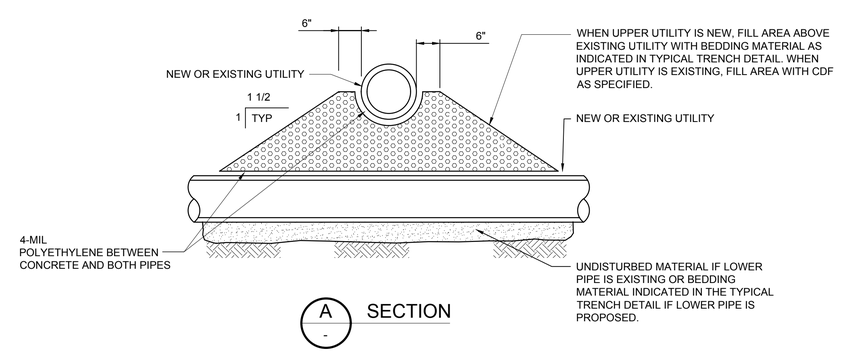

A - SECTION

UTILITY CROSSING DETAIL

C-915

REV	DATE	BY	DESCRIPTION

SCALE: NO SCALE

WARNING: 0 ½ 1 — IF THIS BAR DOES NOT MEASURE 1" THEN DRAWING IS NOT TO SCALE

DATE: JULY 31, 2019
DRAWN BY: A KALELE
DESIGNED BY: Z HALSTEAD
CHECKED BY:
APPROVED BY:

60% DESIGN NOT FOR CONSTRUCTION

This document is an interim document and not suitable for construction. As an interim document, it may contain data that is potentially inaccurate or incomplete and is not to be relied upon without the express written consent of the preparer.

Stantec

LYNN WATER & SEWER COMMISSION

LYNN WATER AND SEWER COMMISSION
PHASE 3 WEST LYNN SEWER SEPARATION
CIVIL GENERAL
STANDARD DETAILS - V

SHEET CG-07

195130174

DWG FILE: C:\pwworkdir\d0537423\PHASE 3_BSS_CG-07.dwg
PLOT DATE: Thursday, July 25, 2019
BY: HALSTEAD, ZACHARY

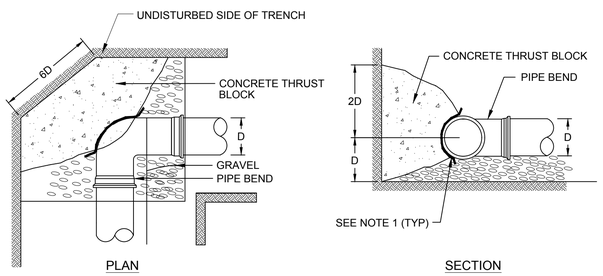

THRUST BLOCK PLACEMENT ON BENDS

NOTES:

1. 4-MIL POLYETHYLENE BETWEEN CONCRETE AND FITTING IF POURED THRUST BLOCK.

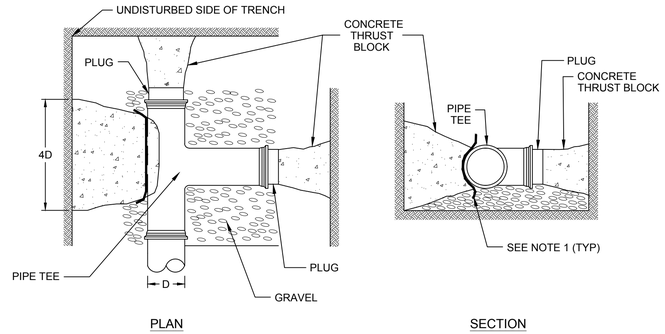

THRUST BLOCK PLACEMENT ON BENDS, TEES AND PLUGS

WATER MAIN CONCRETE THRUST BLOCKS (LWSC) C-916

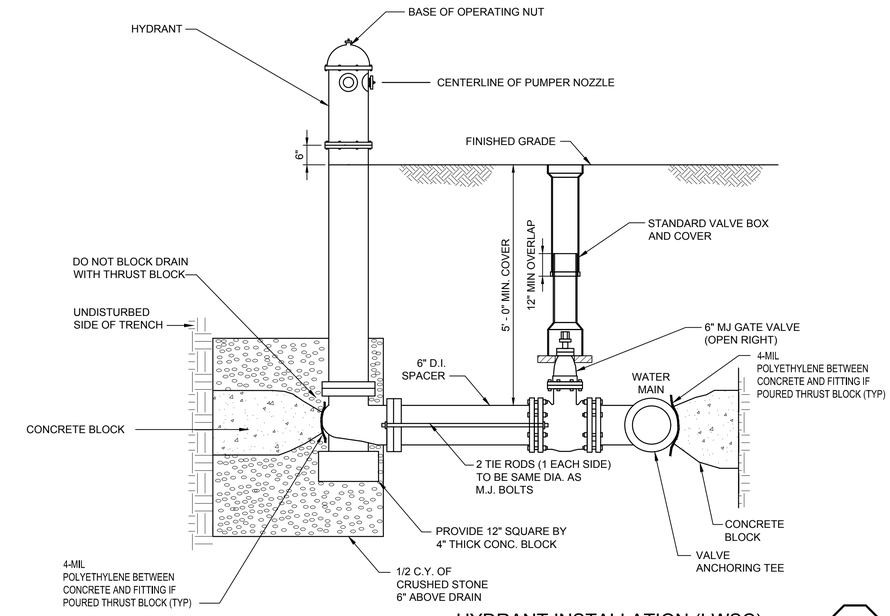

HYDRANT INSTALLATION (LWSC) C-917

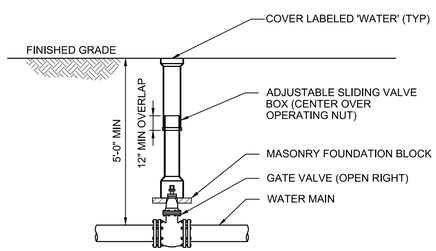

WATER VALVE DETAIL C-918

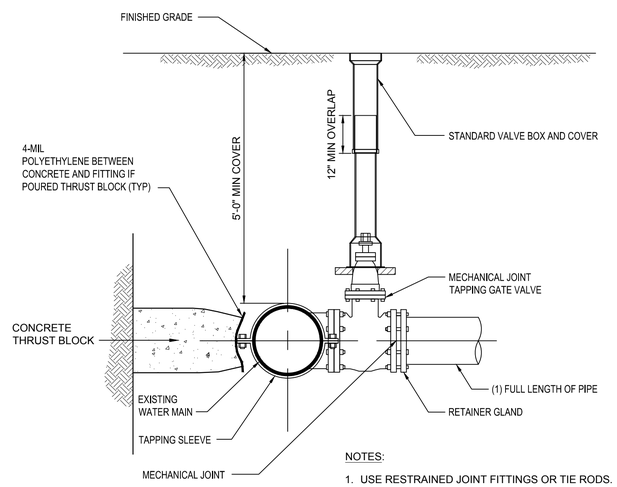

NOTES:

1. USE RESTRAINED JOINT FITTINGS OR TIE RODS.

TAPPING SLEEVE AND VALVE C-919

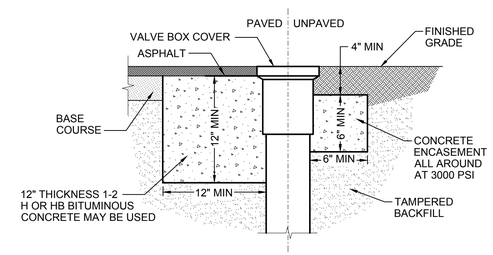

WATER VALVE BOX COLLAR DETAIL C-920

WATER CONSTRUCTION NOTES

1. NEW WATER MAINS SHALL WHEREVER POSSIBLE BE LAID OVER EXISTING SEWERS AND SEWER SERVICES, AND UNDER ANY EXISTING DRAINS, GAS MAINS, TELEPHONE CABLES, ELECTRIC CABLES, OR OTHER WATER MAINS AS SHOWN ON THE PLANS UNLESS DIRECTED OTHERWISE BY THE ENGINEER.
2. NEW WATER MAINS SHALL BE INSTALLED AT A MINIMUM DEPTH OF 5'-0" FROM FINISH GRADE TO THE TOP OF PIPE. WHERE NECESSARY NEW WATER LINES WILL BE INSTALLED AT A GREATER DEPTH TO CLEAR OBSTACLES AT NO ADDITIONAL COST. MINIMUM CLEARANCES OF UTILITIES AS SHOWN ON THE DRAWING MUST BE MAINTAINED. THE CONTRACTOR MUST OBTAIN APPROVAL FROM THE ENGINEER TO INSTALL ANY WATER LINES WITH LESS THAN 5'-0" DEPTH TO COVER. ANY WATER LINES INSTALLED WITH LESS THAN THE REQUIRED MINIMUM DEPTH OF COVER MUST BE INSULATED TO THE EXTENT INDICATED ON THE SPECIFICATIONS AS DIRECTED BY THE ENGINEER.
3. THE CONTRACTOR SHALL EXCAVATE SUFFICIENTLY AHEAD OF HIS PIPE INSTALLATION SO AS TO DETERMINE WHETHER TO RAISE OR LOWER THE PROPOSED WATER MAIN SUCH THAT IT WILL CLEAR EXISTING UTILITIES.
4. THE CONTRACTOR SHALL INSTALL NEW WATER SERVICE PIPE AND CURB STOP AND RECONNECT TO EXISTING SERVICE.
5. THE CONTRACTOR SHALL NOT OPEN OR CLOSE ANY VALVES WHICH HOLD WATER IN THE SYSTEM. THE LYNN WATER AND SEWER COMMISSION (LWSC) WILL, UPON 72 HOURS NOTICE FROM THE CONTRACTOR, OPEN AND/OR CLOSE ANY VALVES REQUIRED FOR DRAINING OR ADMITTING WATER TO VARIOUS SECTIONS OF THE MAINS.

REV	DATE	BY	DESCRIPTION

SCALE: NO SCALE

WARNING: 0 ½ 1 — IF THIS BAR DOES NOT MEASURE 1" THEN DRAWING IS NOT TO SCALE

DATE: JULY 31, 2019
DRAWN BY: A KALELE
DESIGNED BY: Z HALSTEAD
CHECKED BY:
APPROVED BY:

60% DESIGN NOT FOR CONSTRUCTION

This document is an interim document and not suitable for construction. As an interim document, it may contain data that is potentially inaccurate or incomplete and is not to be relied upon without the express written consent of the preparer.

Stantec

LYNN WATER & SEWER COMMISSION

LYNN WATER AND SEWER COMMISSION

PHASE 3 WEST LYNN SEWER SEPARATION

CIVIL GENERAL
STANDARD DETAILS - VI

SHEET CG-08

195130174

BY: HALSTEAD, ZACHARY

PLOT DATE: Thursday, July 25, 2019

DWG FILE: C:\pwworkdir\d0537423\PHASE 3_BSS_CG-08.dwg

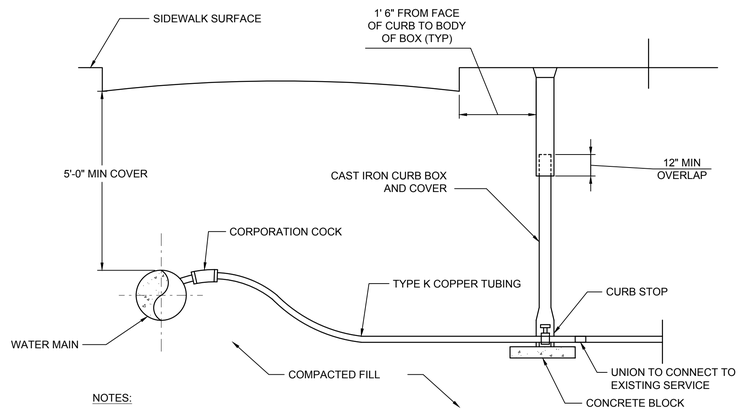

NOTES:

1. INSTALL NEW WATER SERVICE PIPE AND CURB STOP AND RECONNECT TO EXISTING SERVICE.

WATER SERVICE DETAIL (LWSC) C-921

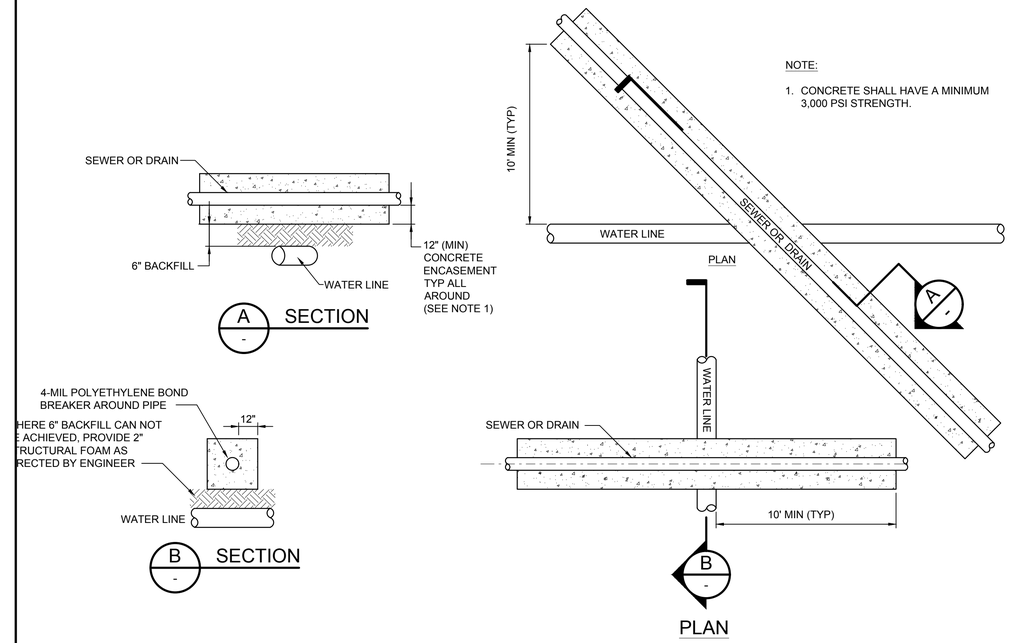

NOTE:

1. CONCRETE SHALL HAVE A MINIMUM 3,000 PSI STRENGTH.

CONCRETE ENCASEMENT OF SEWER OR DRAIN AT WATER MAINS DETAIL C-922

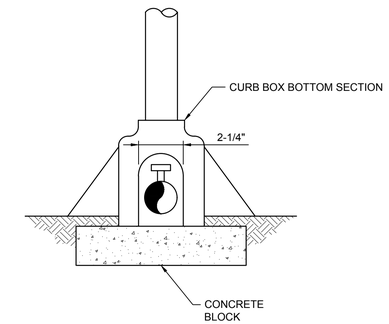

TYPICAL CURB BOX SECTION (LWSC) C-923

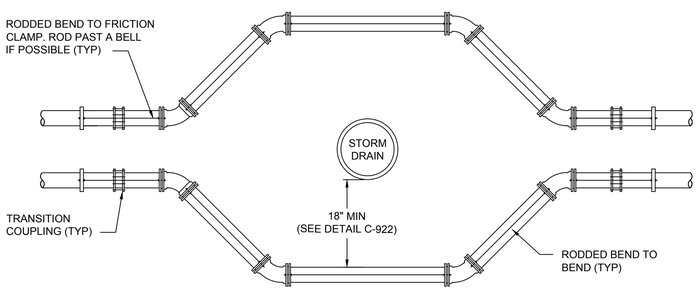

WATER MAIN RELOCATION DETAIL C-924

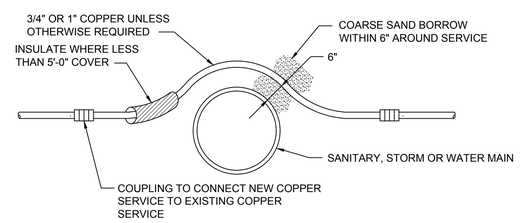

WATER SERVICE RELOCATION C-925

REV	DATE	BY	DESCRIPTION

SCALE: NO SCALE

WARNING: 0 ½ 1 — IF THIS BAR DOES NOT MEASURE 1" THEN DRAWING IS NOT TO SCALE

DATE: JULY 31, 2019
DRAWN BY: A KALELE
DESIGNED BY: Z HALSTEAD
CHECKED BY:
APPROVED BY:

60% DESIGN
NOT FOR CONSTRUCTION

This document is an interim document and not suitable for construction. As an interim document, it may contain data that is potentially inaccurate or incomplete and is not to be relied upon without the express written consent of the preparer.

Stantec

LYNN WATER & SEWER COMMISSION

LYNN WATER AND SEWER COMMISSION
PHASE 3 WEST LYNN SEWER SEPARATION
CIVIL GENERAL
STANDARD DETAILS - VII

SHEET CG-09

195130174

BY: HALSTEAD, ZACHARY
PLOT DATE: Thursday, July 25, 2019
DWG FILE: C:\pwworkdir\d0537423\PHASE 3_BSS_CG-09.dwg

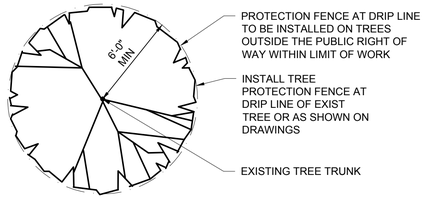

PLAN

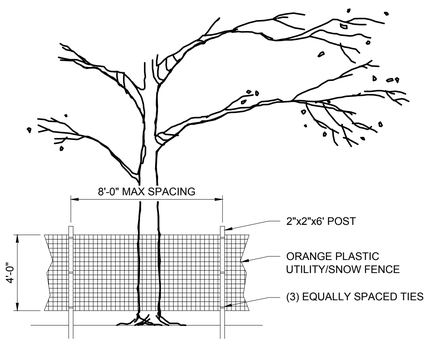

ELEVATION
TREE PROTECTION FENCE

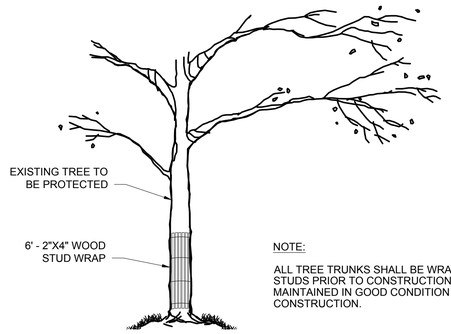

NOTE:

ALL TREE TRUNKS SHALL BE WRAPPED IN WOODEN 2"X4" STUDS PRIOR TO CONSTRUCTION AND SHALL BE MAINTAINED IN GOOD CONDITION UNTIL COMPLETION OF CONSTRUCTION.

ELEVATION
TREE PROTECTION WRAP

TREE PROTECTION

C-927

NOTE:

1. THE TOP OF THE TRENCH DAM SHALL BE EXTENDED A MINIMUM OF 2'-0" ABOVE THE HIGH GROUND WATER LEVEL, AS DETERMINED BY THE NEAREST BORING OR BY THE ENGINEER.

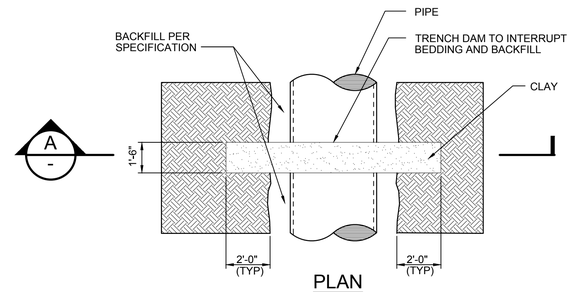

PLAN

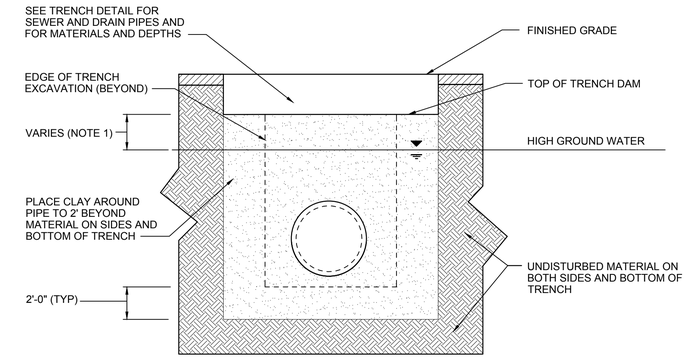

A
-
SECTION

TRENCH DAM DETAIL

C-928

BY: HALSTEAD, ZACHARY

PLOT DATE: Friday, July 26, 2019

DWG FILE: C:\pwworkdir\d0537423\PHASE 3_BSS_CG-10.dwg

REV	DATE	BY	DESCRIPTION

SCALE: NO SCALE

WARNING: 0 ½ 1 — IF THIS BAR DOES NOT MEASURE 1" THEN DRAWING IS NOT TO SCALE

DATE: JULY 31, 2019
DRAWN BY: A KALELE
DESIGNED BY: Z HALSTEAD
CHECKED BY:
APPROVED BY:

60% DESIGN
NOT FOR CONSTRUCTION

This document is an interim document and not suitable for construction. As an interim document, it may contain data that is potentially inaccurate or incomplete and is not to be relied upon without the express written consent of the preparer.

Stantec

LYNN WATER & SEWER COMMISSION

LYNN WATER AND SEWER COMMISSION

PHASE 3 WEST LYNN SEWER SEPARATION

CIVIL GENERAL
STANDARD DETAILS - VIII

SHEET
CG-10

195130174

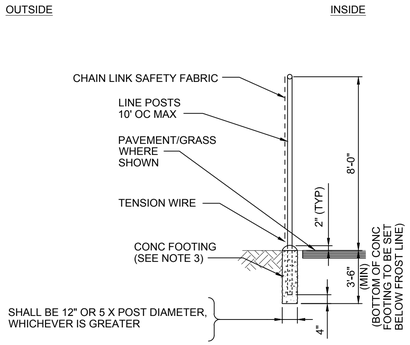

NOTES:

1. SEE SPECIFICATIONS FOR FENCE MATERIAL, COATINGS, AND INSTALLATION REQUIREMENTS.
2. FENCE HEIGHT SHALL BE 8' UNLESS OTHERWISE NOTED.
3. ALTERNATE FOOTING DETAILS ALLOWABLE FOR TEMP FENCE

TEMPORARY CHAIN LINK FENCE

C-929

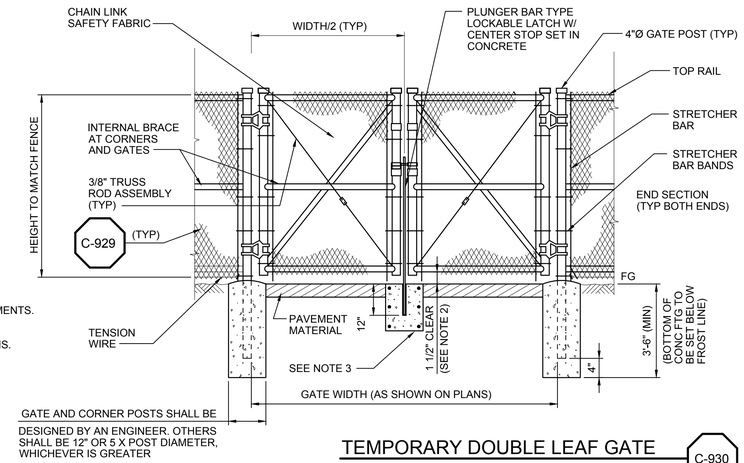

NOTES:

1. SEE SPECIFICATIONS FOR FENCE MATERIAL, COATINGS AND INSTALLATION REQUIREMENTS.
2. SEE SPECIFICATIONS FOR CLEARANCE IN SNOW REGIONS.
3. 12" DIAMETER X 18" DEEP CONCRETE STOP W/ 20 GA STEEL PLUNGER SLEEVE, DIA = ROD OD +1/2".

TEMPORARY DOUBLE LEAF GATE

C-930

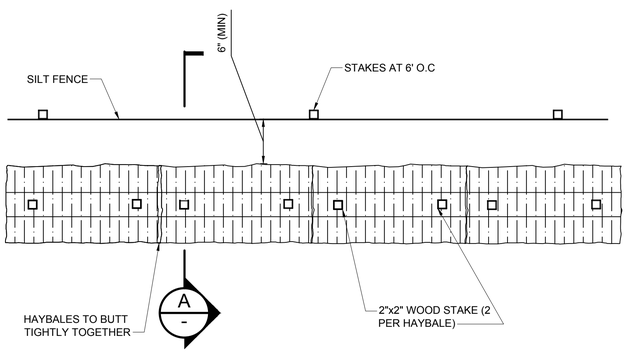

PLAN

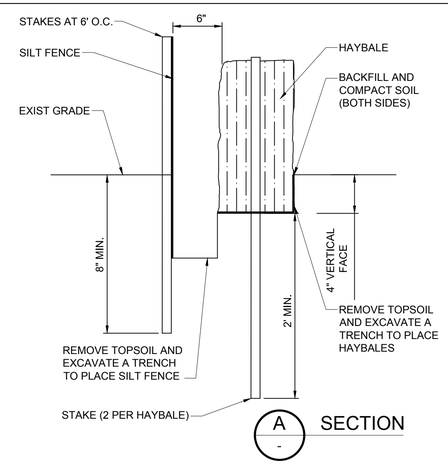

SECTION

TEMPORARY HAYBALES AND SILT FENCE DETAIL

C-931

REV	DATE	BY	DESCRIPTION

SCALE: NO SCALE

WARNING: 0 ½ 1 — IF THIS BAR DOES NOT MEASURE 1" THEN DRAWING IS NOT TO SCALE

DATE: JULY 31, 2019
DRAWN BY: A KALELE
DESIGNED BY: Z HALSTEAD
CHECKED BY:
APPROVED BY:

60% DESIGN
NOT FOR CONSTRUCTION

This document is an interim document and not suitable for construction. As an interim document, it may contain data that is potentially inaccurate or incomplete and is not to be relied upon without the express written consent of the preparer.

Stantec

LYNN WATER & SEWER COMMISSION

LYNN WATER AND SEWER COMMISSION

PHASE 3 WEST LYNN SEWER SEPARATION

CIVIL GENERAL
STANDARD DETAILS - IX

SHEET
CG-11

195130174

DWG FILE: C:\pwworkdir\d053742\3\PHASE 3_BSS_CG-11.dwg
PLOT DATE: Friday, July 26, 2019
BY: HALSTEAD, ZACHARY

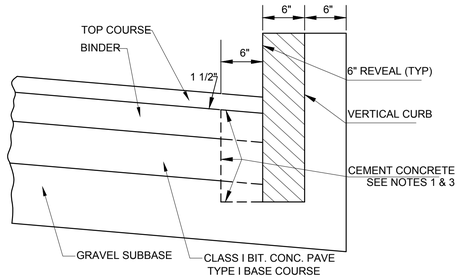

NOTE:

1. PROCEDURE DESCRIBED HEREIN IS APPLICABLE ONLY IF CURB IS TO BE SET OR RESET AFTER BASE AND/OR BINDER COURSES ARE IN PLACE: OTHERWISE CEMENT CONCRETE WILL BE ELIMINATED AND GRAVEL BROUGHT UP TO BOTTOM OF BASE COURSE. FOR DESCRIPTION, MATERIALS AND CONSTRUCTION METHOD, SEE SPECIFICATIONS.
2. CUT NEAT LINES 6" FROM CURB LINE AND REMOVE BINDER, BASE AND STONE, REPLACE WITH CEMENT CONCRETE.
3. ANY CLASS CEMENT CONCRETE THAT IS ACCEPTABLE TO THE DEPARTMENT UNDER SECTION M4 OF THE 1988 STANDARD SPECIFICATION; ALL TEST REQUIREMENTS ARE WAIVED. BITUMINOUS CONCRETE IS NOT TO BE USED AS A SUBSTITUTE.
4. PAYMENT FOR CEMENT CONCRETE WILL BE INCLUDED IN THE PRICE PER LINEAR FOOT OF CURBING.

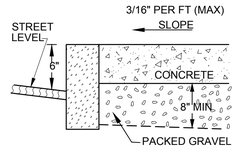

CROSS SECTION OF SIDEWALK

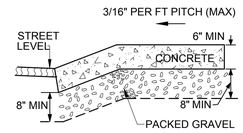

CROSS SECTION OF DRIVEWAY

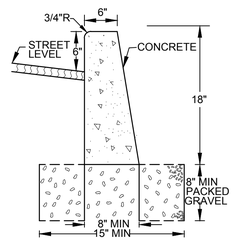

CROSS SECTION OF CONCRETE CURB

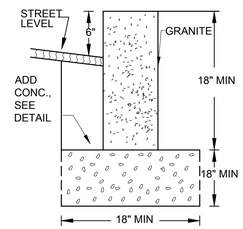

CROSS SECTION OF GRANITE CURB

VERTICAL CURB

C-932

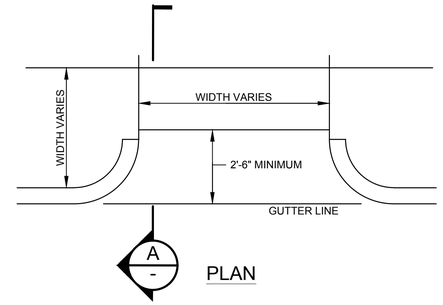

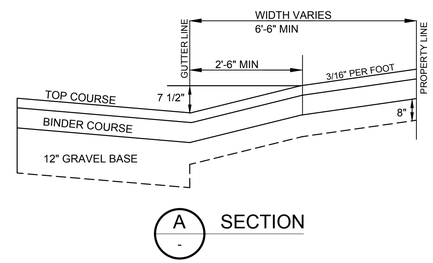

DRIVEWAY

C-933

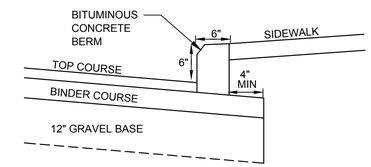

BITUMINOUS CONCRETE BERM

C-934

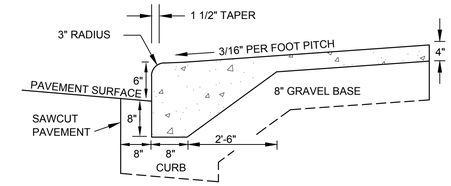

CONCRETE WALK WITH INTEGRAL CURB

C-935

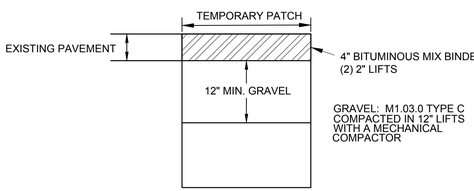

NOTE:

1. FOR LOCATIONS TO BE COLD PLANED AND OVERLAYED.

INITIAL PAVEMENT
FOR EXISTING PAVEMENT 4"

C-936

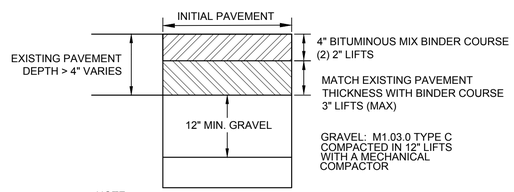

NOTE:

1. FOR LOCATIONS TO BE COLD PLANED AND OVERLAYED.

INITIAL PAVEMENT
FOR EXISTING PAVEMENT > 4"

C-937

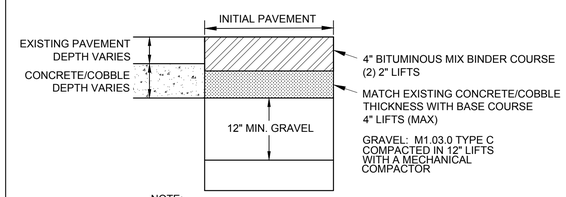

NOTE:

1. FOR LOCATIONS TO BE COLD PLANED AND OVERLAYED.

INITIAL PAVEMENT
CONCRETE OR COBBLE BASE

C-938

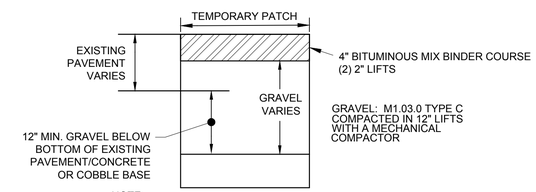

NOTE:

1. FOR LOCATIONS TO RECEIVE PERMANENT TRENCH PAVEMENT.

TEMPORARY TRENCH PATCH

C-939

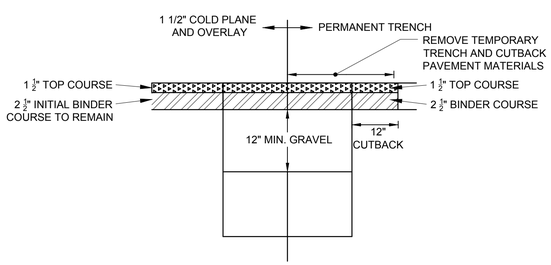

PERMANENT PAVEMENT
FOR EXISTING PAVEMENT 4"

C-940

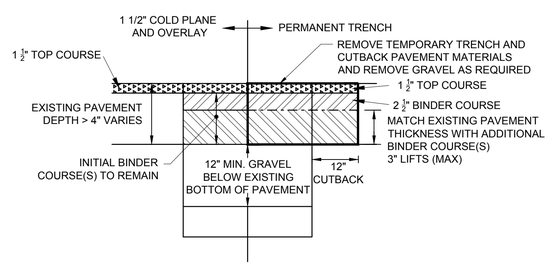

PERMANENT PAVEMENT
FOR EXISTING PAVEMENT > 4"

C-941

REV	DATE	BY	DESCRIPTION

SCALE: NO SCALE

WARNING: 0 ½ 1 — IF THIS BAR DOES NOT MEASURE 1" THEN DRAWING IS NOT TO SCALE

DATE	JULY 31, 2019
DRAWN BY	A KALELE
DESIGNED BY	Z HALSTEAD
CHECKED BY	
APPROVED BY	

60% DESIGN
NOT FOR CONSTRUCTION

This document is an interim document and not suitable for construction. As an interim document, it may contain data that is potentially inaccurate or incomplete and is not to be relied upon without the express written consent of the preparer.

Stantec

LYNN WATER & SEWER COMMISSION

LYNN WATER AND SEWER COMMISSION

PHASE 3 WEST LYNN SEWER SEPARATION

CIVIL GENERAL
STANDARD DETAILS - X

SHEET
CG-12

195130174

BY: HALSTEAD, ZACHARY

PLOT DATE: Friday, July 26, 2019

DWG FILE: C:\pwworkdir\d0537423\PHASE 3_BSS_CG-12.dwg

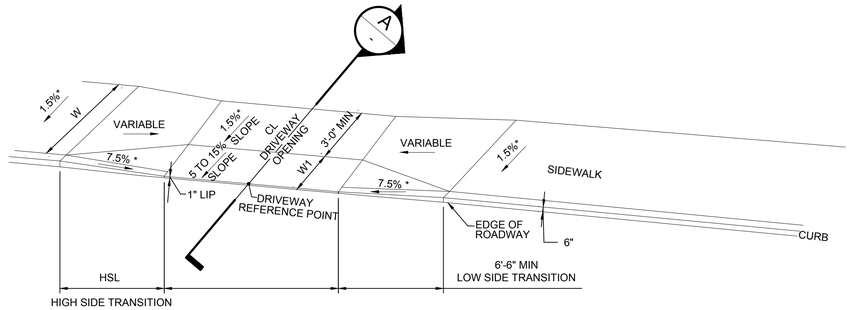

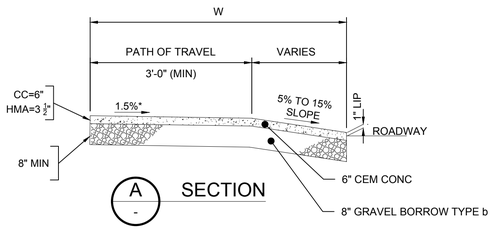

LEGEND

HSL = HIGH SIDE TRANSITION LENGTH (SEE C-944)

W = SIDEWALK WIDTH

* = TOLERANCE FOR CONSTRUCTION ± 0.5%

CC = CEMENT CONCRETE

HMA = HOT MIX ASPHALT

SIDEWALK THROUGH DRIVEWAYS WITHOUT CURB RETURNS

C-942

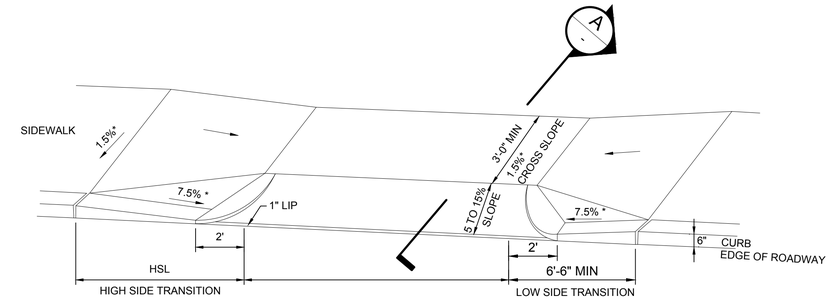

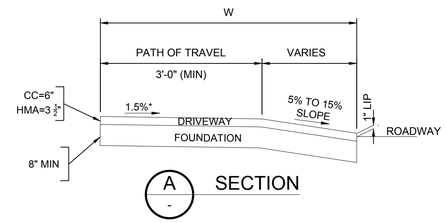

LEGEND

HSL = HIGH SIDE TRANSITION LENGTH (SEE DETAIL C-944)

W = SIDEWALK WIDTH

* = TOLERANCE FOR CONSTRUCTION ± 0.5%

CC = CEMENT CONCRETE

HMA = HOT MIX ASPHALT

SIDEWALK THROUGH DRIVEWAYS WITH CURB RETURNS 2' CURB CORNERS

C-943

ROADWAY PROFILE GRADE (%)	HIGH SIDE TRANSITION LENGTH*	
=0%	6'-6"	78"
>0% TO 1%	7'-8"	92"
>1% TO 2%	9'-0"	108"
>2% TO 3%	11'-0"	132"
>3% TO 4%	14'-0"	168"
>4% TO 5%	15'-0" (MAX)	180"

* BASED ON DESIGN SLOPE OF 7.5% AND 6" REVEAL

CURB TRANSITION LENGTH FOR WHEELCHAIR RAMPS

C-944

BY: HALSTEAD, ZACHARY

PLOT DATE: Thursday, July 25, 2019

DWG FILE: C:\pwworkdir\d0537423\PHASE 3_BSS_CG-13.dwg

REV	DATE	BY	DESCRIPTION

SCALE: NO SCALE

WARNING: 0 ½ 1 — IF THIS BAR DOES NOT MEASURE 1" THEN DRAWING IS NOT TO SCALE

DATE: JULY 31, 2019
DRAWN BY: A KALELE
DESIGNED BY: Z HALSTEAD
CHECKED BY:
APPROVED BY:

60% DESIGN
NOT FOR CONSTRUCTION

This document is an interim document and not suitable for construction. As an interim document, it may contain data that is potentially inaccurate or incomplete and is not to be relied upon without the express written consent of the preparer.

Stantec

LYNN WATER & SEWER COMMISSION

LYNN WATER AND SEWER COMMISSION

PHASE 3 WEST LYNN SEWER SEPARATION

CIVIL GENERAL
STANDARD DETAILS - XI

SHEET
CG-13

195130174

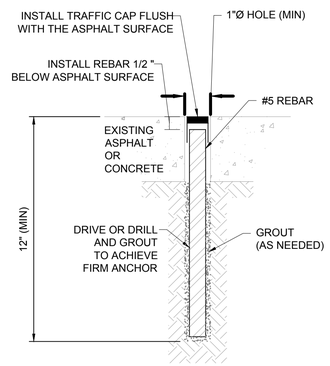

SETTLEMENT MONITORING POINT NOTES:

1. SEE DETAIL C-933 FOR SURFACE EXTENSION THROUGH BALLAST.

SETTLEMENT MONITORING POINT (S) BELOW ASPHALT OR CONCRETE — C-945

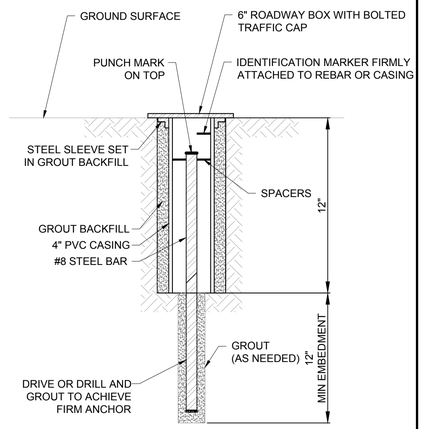

SETTLEMENT MONITORING POINT (S) IN SOIL — C-946

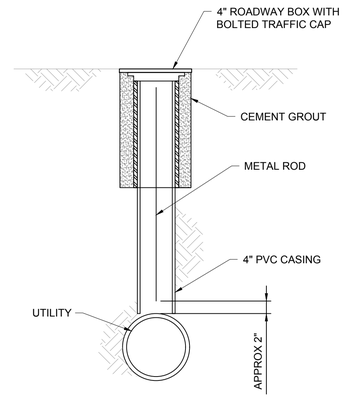

UMP NOTES:

1. EXPOSE UTILITY TO ALLOW DIRECT ACCESS FOR SURVEY ROD USING VACUUM EXTRACTION OF SOILS OR OTHER NON-DESTRUCTIVE METHOD.
2. PROTECT ACCESS HOLE FROM SOIL WITH PVC CASING.
3. PVC CASING SHALL NOT COME IN DIRECT CONTACT WITH EXPOSED UTILITY. STEEL ROD TO CONTACT UTILITY UPON OWNER'S REQUEST ONLY.
4. CONTRACTOR TO OBTAIN WRITTEN AUTHORIZATION PRIOR TO UTILITY MONITORING POINT INSTALLATION.

UTILITY MONITORING POINT (U) — C-947

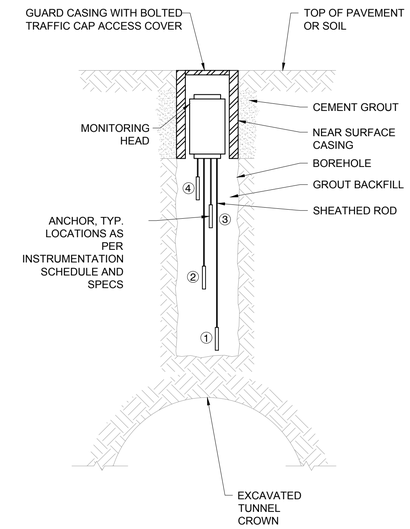

EXTENSOMETER (E) — C-948

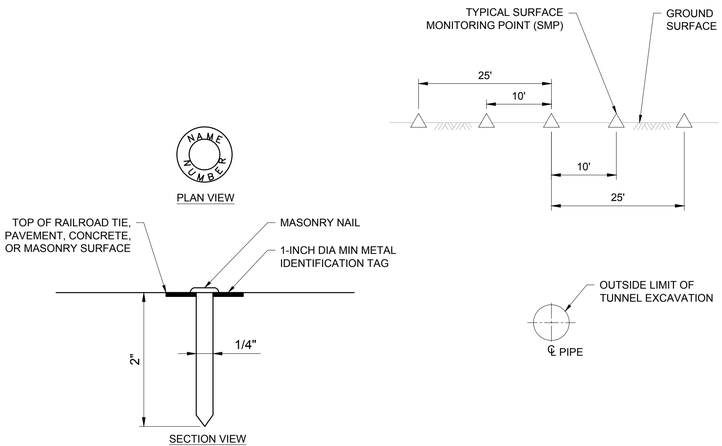

MONITORING POINT ARRAY NOTES:

1. ADJUST LOCATIONS AS NECESSARY FOR BUILDING AND OBSTRUCTIONS.

MONITORING POINT ARRAY (M) — C-949

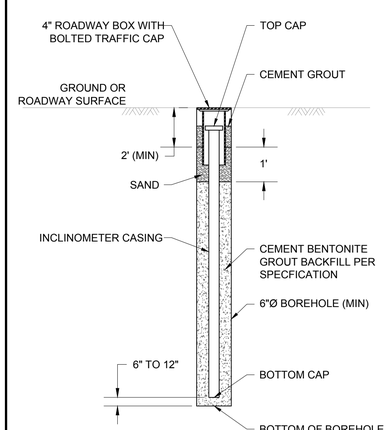

INCLINOMETER (I) — C-950

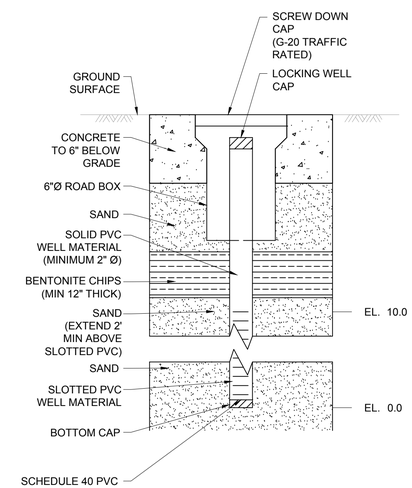

OBSERVATION WELL (OW) — C-951

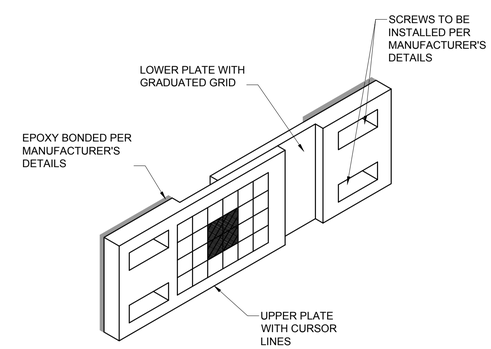

CRACK GAUGE (CG) — C-952

REV	DATE	BY	DESCRIPTION

SCALE: NO SCALE

WARNING: 0 ½ 1 — IF THIS BAR DOES NOT MEASURE 1" THEN DRAWING IS NOT TO SCALE

DATE: JULY 31, 2019
DRAWN BY: Z HALSTEAD
DESIGNED BY: N GOODENOW
CHECKED BY:
APPROVED BY:

60% DESIGN
NOT FOR CONSTRUCTION

This document is an interim document and not suitable for construction. As an interim document, it may contain data that is potentially inaccurate or incomplete and is not to be relied upon without the express written consent of the preparer.

Stantec

LYNN WATER & SEWER COMMISSION

LYNN WATER AND SEWER COMMISSION
PHASE 3 WEST LYNN SEWER SEPARATION
CIVIL GENERAL - GEOTECHNICAL INSTRUMENTATION AND MONITORING DETAILS

SHEET CG-14

195130174

BY: HALSTEAD, ZACHARY
PLOT DATE: Friday, July 26, 2019
DWG FILE: C:\pwworkdir\d0537423\PHASE 3_BSS_CG-14.dwg

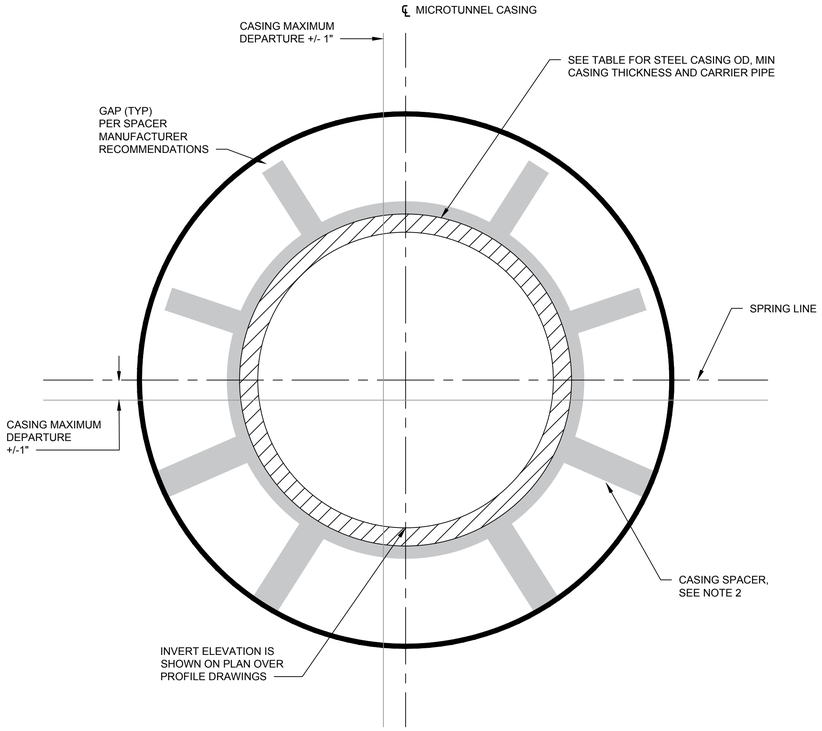

CASING OUTSIDE DIAMETER	MIN THICKNESS	CARRIER PIPE
42-INCH STEEL	3/4-INCH	30-INCH RCP
72-INCH STEEL	1-INCH	54-INCH DI

CASING DETAIL NOTES

1. CASING SHALL BE INSTALLED BY TRENCHLESS METHODS.
2. CUSTOMIZED CASING SPACER SHALL BE DESIGNED BY CONTRACTOR PER SPECIFICATIONS AND MANUFACTURED TO FIT ACTUAL CASING ALIGNMENT. SPACING AS REQUIRED PER PIPE MANUFACTURER'S RECOMMENDATION TO MAINTAIN THE CARRIER PIPE'S INVERT ALIGNMENT DURING WATER FILLING AND BACKFILL GROUT PLACEMENT.
3. CARRIER PIPE SHALL BE INSTALLED SUCH THAT THE INVERT ELEVATIONS SHOWN ON THE CONTRACT DRAWINGS ARE MET. MAXIMUM DEPARTURE FOR CARRIER PIPE SHALL BE IN ACCORDANCE WITH SPECIFICATION SECTION "CARRIER PIPE INSTALLATION INTO CASING".
4. TIMBER BLOCKING NOT PERMITTED.
5. BACKFILL GROUT NOT SHOWN. BACKFILL GROUT TO BE INSTALLED PER SPECIFICATIONS.
6. ALL STEEL CASING SECTIONS SHALL BE JOINED BY CONTINUOUS WELD OR PERMALOCK JOINT OR APPROVED EQUAL.
7. ACTUAL CASING DIAMETER WILL BE BASED ON CONTRACTOR'S PREFERRED OUTSIDE DIAMETER. CONSIDERING CONSTRAINTS OUTLINED IN SPECIFICATIONS.
8. FOR ALL ALLOWABLE OVERCUT SEE SPECIFICATION SECTION "AUGER BORING" AND "PIPE JACKING"
9. THE CONTRACTOR IS RESPONSIBLE TO INCREASE THE THICKNESS OF THE STEEL CASING AS REQUIRED TO ACCOMMODATE CONSTRUCTION LOADS, HW-20 AND HS-93 SURCHARGE LOADS.
10. CARRIER PIPE SHALL BE TESTED BEFORE INSTALLATION OF END SEALS ON CASING.
11. EACH END OF CASING SHALL BE SEALED WITH FLEXIBLE SEALER OR APPROVED EQUAL.
12. MINIMUM COMPRESSIVE STRENGTH OF BACKFILL GROUT SHALL BE 250 PSI @ 28 DAYS.

STEEL PIPE CASING — C-953

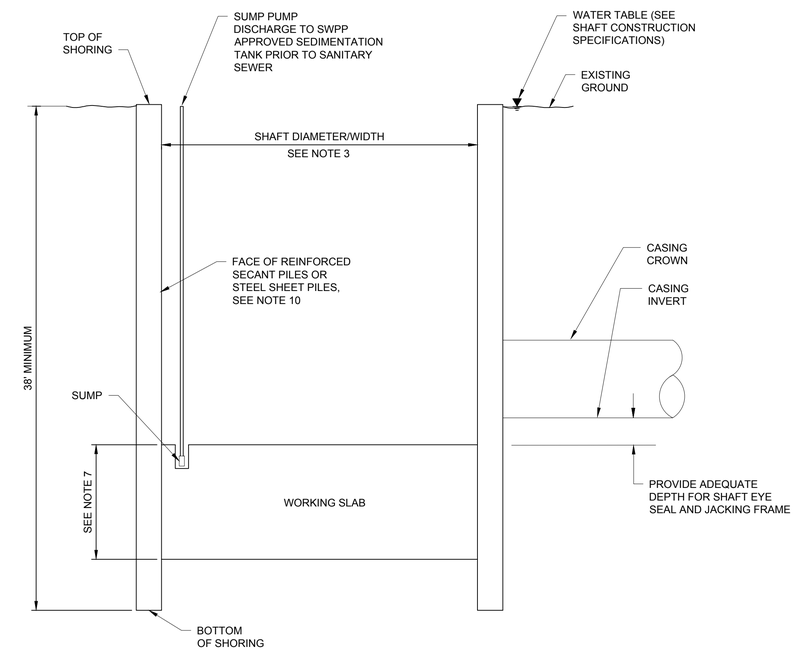

SHAFT DETAIL NOTES

1. SHAFTS (JACKING/RECEIVING) SHALL BE CONSTRUCTED PER SPECIFICATION SECTION "SHAFT CONSTRUCTION".
2. TEMPORARY EXCAVATION SUPPORT SHALL BE DESIGNED BY THE CONTRACTOR IN ACCORDANCE WITH THE CONTRACT DOCUMENTS.
3. SHAFT SIZE AND SHAPE TO BE DETERMINED BY THE CONTRACTOR TO SUIT SITE SPACE CONSTRAINTS AND MEANS AND METHODS OF CONSTRUCTION.
4. NO DEWATERING IS PERMITTED FOR SHAFT CONSTRUCTION OR DURING TUNNELING OPERATION. ONLY LOCAL SUMP PUMPING IS ALLOWED.
5. PROVIDE GROUND IMPROVEMENT OR OTHER APPROVED METHODS AS NECESSARY TO MEET INFILTRATION REQUIREMENTS IN SPECIFICATIONS.
6. SUMP PUMPING WITHIN SHAFT IS REQUIRED TO HANDLE INFILTRATION DURING SHAFT OPERATION.
7. THE CONTRACTOR SHALL REFER TO SPECIFICATIONS FOR SUPPORT SYSTEM REQUIREMENTS AND GEOTECHNICAL PARAMETERS.
8. PROVIDE ADDITIONAL SUPPORT AS REQUIRED AROUND TUNNEL EYE.
9. USE MECHANICAL TUNNEL EYE SEAL AS REQUIRED IN SPECIFICATIONS. CONTRACTOR SHALL DESIGN OPENING AND SEAL BASED ON ACTUAL MTBM AND CASING SIZE, GROUNDWATER LEVEL, AND LUBRICATION AND GROUT PRESSURE.
10. WHEN REMOVAL IS PRACTICAL AND APPROVED BY THE ENGINEER, THE REMOVAL OF SUPPORT SYSTEM SHALL BE IN A MANNER THAT DOES NOT DAMAGE THE PIPELINE, CAUSE SETTLEMENT OR HEAVE OF THE GROUND SURFACE, NOR PRODUCE CONSTRUCTION VIBRATIONS THAT CAUSE DAMAGE TO ADJACENT UTILITIES OR STRUCTURES.

SHAFT — C-954

REV	DATE	BY	DESCRIPTION

SCALE: 1"=1'

WARNING: 0 ½ 1 — IF THIS BAR DOES NOT MEASURE 1" THEN DRAWING IS NOT TO SCALE

DATE: JULY 31, 2019
DRAWN BY: EBONACCORSO
DESIGNED BY: N GOODENOW
CHECKED BY:
APPROVED BY:

60% DESIGN NOT FOR CONSTRUCTION

This document is an interim document and not suitable for construction. As an interim document, it may contain data that is potentially inaccurate or incomplete and is not to be relied upon without the express written consent of the preparer.

Stantec

LYNN WATER & SEWER COMMISSION

LYNN WATER AND SEWER COMMISSION
PHASE 3 WEST LYNN SEWER SEPARATION
CIVIL GENERAL - GEOTECHNICAL TUNNELING DETAILS

SHEET CG-15

195130174

DWG FILE: C:\pwworkdir\d0537423\PHASE 3_BSS_CG-15.dwg
PLOT DATE: Friday, July 26, 2019
BY: HALSTEAD, ZACHARY

KEY PLAN

BY: HALSTEAD, ZACHARY

PLOT DATE: Thursday, July 18, 2019

DWG FILE: C:\pwworkdir\d0535805\PHASE 3_BSS_C_C01.dwg

REV	DATE	BY	DESCRIPTION

SCALE
1" = 70'

WARNING
0 ½ 1
IF THIS BAR DOES NOT MEASURE 1" THEN DRAWING IS NOT TO SCALE

DATE JULY 31, 2019
DRAWN BY A KALELE
DESIGNED BY Z HALSTEAD
CHECKED BY
APPROVED BY

60% DESIGN
NOT FOR CONSTRUCTION

This document is an interim document and not suitable for construction. As an interim document, it may contain data that is potentially inaccurate or incomplete and is not to be relied upon without the express written consent of the preparer.

Stantec

LYNN WATER & SEWER COMMISSION

LYNN WATER AND SEWER COMMISSION

PHASE 3 WEST LYNN SEWER SEPARATION

CIVIL
KEY PLAN

SHEET
C-01

195130174

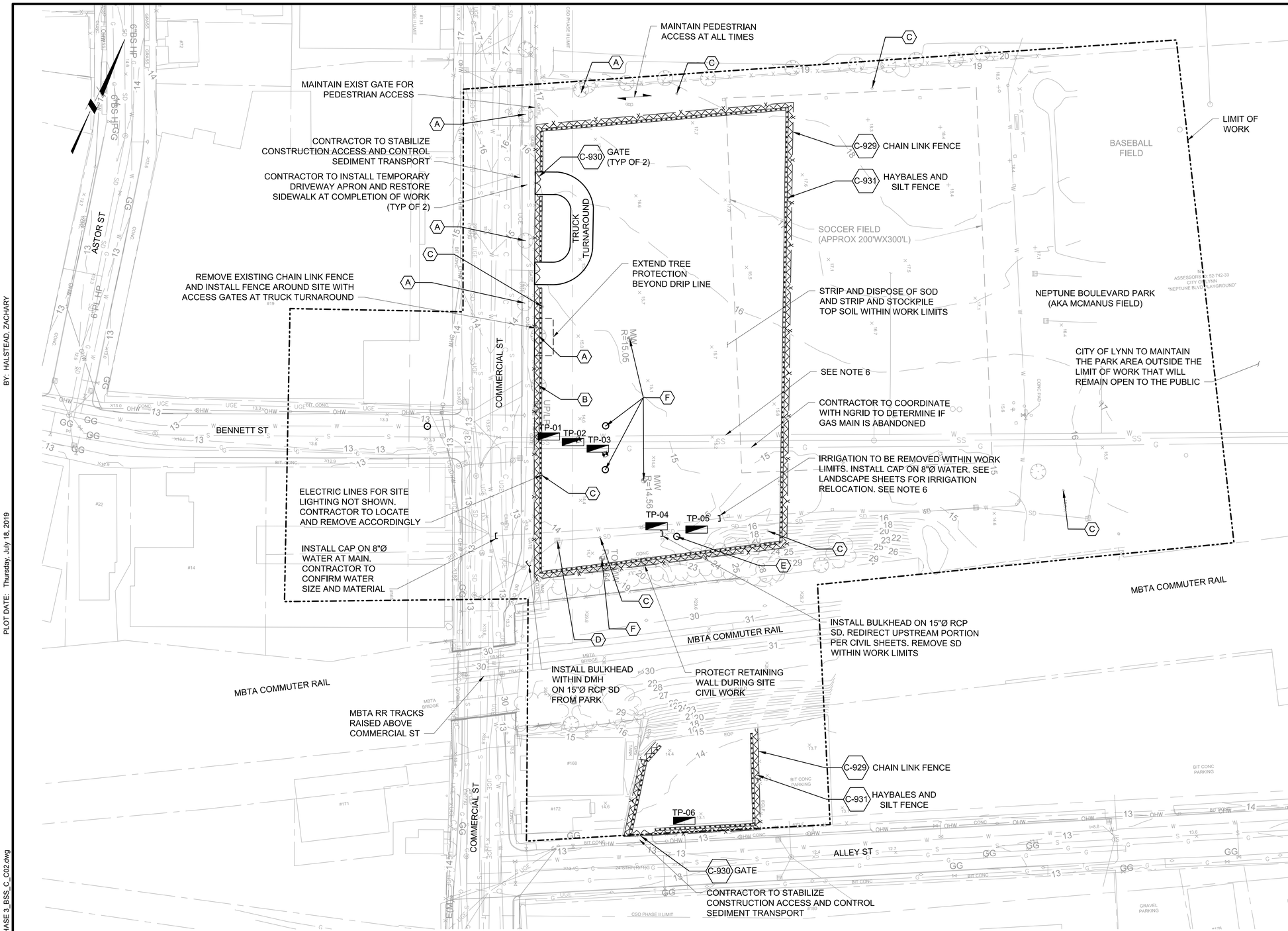

PLAN

GENERAL SHEET NOTES

1. THE ENTIRE LIMITS OF CONSTRUCTION SHALL BE CONTROLLED BY TEMPORARY FENCE. ACCESS SHALL BE CONTROLLED BY LOCKABLE ACCESS GATES. CHAIN LINK SAFETY FABRIC SHALL BE ADDED TO ALL FENCING.
2. WORK BETWEEN ALLEY STREET AND MBTA RIGHT OF WAY IS PRIVATE PARCEL. CONTRACTOR TO COORDINATE WITH OWNER FOR ACCESS. SITE TO BE RESTORED TO EXISTING CONDITION.
3. HAYBALES AND SILT FENCE TO BE PLACED AND STAKED PER DETAIL C-931. ADDITIONAL HAYBALES AND FENCING SHALL BE STOCKPILED ONSITE.
4. THE CONSTRUCTION STAGING AREA SHALL BE FILLED WITH CRUSHED STONE AS NEEDED TO CREATE A SUITABLE WORKING PAD AND PREVENT SEDIMENT TRANSPORT.
5. TREES FOR REMOVAL ARE TO BE REVIEWED AND APPROVED BY LANDSCAPE ARCHITECT AND CITY ARBORIST PRIOR TO REMOVAL.
6. CONTRACTOR TO COORDINATE WITH LWSC ON ACTIVE WATERMAINS FOUND WITHIN PARK LIMITS. PROVIDE TEMPORARY WATER BYPASS TO MAINTAIN SERVICE.
7. TEMPORARY WATER BYPASS IS PERMITTED BETWEEN APRIL 1ST AND NOVEMBER 1ST UNLESS APPROVED BY LWSC.

SHEET KEYNOTES

A. PROTECT TREE W/ DRIPLINE FENCE AND TRUNK WRAP PER DETAIL C-927
B. REMOVE AND DISPOSE TREE
C. REMOVE AND DISPOSE LIGHT POLE
D. REMOVE AND DISPOSE CATCH BASIN
E. MONITORING WELL TO REMAIN IN PLACE
F. REMOVE AND DISPOSE MONITORING WELL AS NEEDED

TEST PIT SCHEDULE

TEST PIT NO.	UTILITY TO INVESTIGATE
TP-01	W
TP-02	SS
TP-03	G
TP-04	W
TP-05	SD
TP-06	T

0 40 80
SCALE IN FEET

REV	DATE	BY	DESCRIPTION

SCALE 1"=40'

WARNING: 0 ½ 1 — IF THIS BAR DOES NOT MEASURE 1" THEN DRAWING IS NOT TO SCALE

DATE JULY 31, 2019
DRAWN BY A KALELE
DESIGNED BY Z HALSTEAD
CHECKED BY
APPROVED BY

60% DESIGN NOT FOR CONSTRUCTION

This document is an interim document and not suitable for construction. As an interim document, it may contain data that is potentially inaccurate or incomplete and is not to be relied upon without the express written consent of the preparer.

Stantec

LYNN WATER & SEWER COMMISSION

LYNN WATER AND SEWER COMMISSION
PHASE 3 WEST LYNN SEWER SEPARATION
CIVIL
DEMOLITION, SITE CONTROLS AND TEST PIT SCHEDULE

SHEET C-02

195130174

DWG FILE: C:\pwworkdir\d0535805\PHASE 3_BSS_C_C02.dwg
PLOT DATE: Thursday, July 18, 2019
BY: HALSTEAD, ZACHARY

PLAN

LEGEND

SOIL BORING

SOIL BORING AND MONITORING WELL

GENERAL SHEET NOTES

1. SUBSURFACE GEOTECHNICAL INVESTIGATIONS WERE PERFORMED BY TETRA TECH IN MARCH 2019. SEE SPECIFICATIONS FOR BORING LOGS.
2. BORINGS WERE TAKEN FOR THE PURPOSE OF DESIGN AND INDICATE CONDITIONS AT THE LOCATION OF THE BORING ONLY. SUBSURFACE CONDITIONS ENCOUNTERED DURING CONSTRUCTION MAY VARY FROM THOSE SHOWN IN THE BORING LOGS PER THE SPECIFICATIONS. GROUNDWATER LEVELS INDICATED IN THE BORING LOGS ARE THOSE EXISTING AT THE TIME SUBSURFACE INVESTIGATIONS WERE MADE AND DO NOT REPRESENT PERMANENT GROUNDWATER LEVELS.

BORING/WELL ID	EASTING/X	NORTHING/Y
TT-075-G-MW	802270.4714	2992180.2617
B-08	802255.4118	2992160.2952
TT-064D-G	802279.9627	2992159.7177
TT-064S-G-MW	802285.4123	2992148.5656
TT-016-G-MW	802142.4330	2992118.5468
TT-015-G-MW	802359.8523	2992125.1000

BY: HALSTEAD, ZACHARY

PLOT DATE: Thursday, July 18, 2019

DWG FILE: C:\pwworkdir\d0535805\PHASE 3_BSS_C_C03.dwg

REV	DATE	BY	DESCRIPTION

SCALE: 1" = 40'

WARNING: 0 ½ 1 — IF THIS BAR DOES NOT MEASURE 1" THEN DRAWING IS NOT TO SCALE

DATE: JULY 31, 2019
DRAWN BY: A KALELE
DESIGNED BY: Z HALSTEAD
CHECKED BY:
APPROVED BY:

60% DESIGN
NOT FOR CONSTRUCTION

This document is an interim document and not suitable for construction. As an interim document, it may contain data that is potentially inaccurate or incomplete and is not to be relied upon without the express written consent of the preparer.

Stantec

LYNN WATER & SEWER COMMISSION

LYNN WATER AND SEWER COMMISSION

PHASE 3 WEST LYNN SEWER SEPARATION

GENERAL BORING PLAN

SHEET C-03

195130174

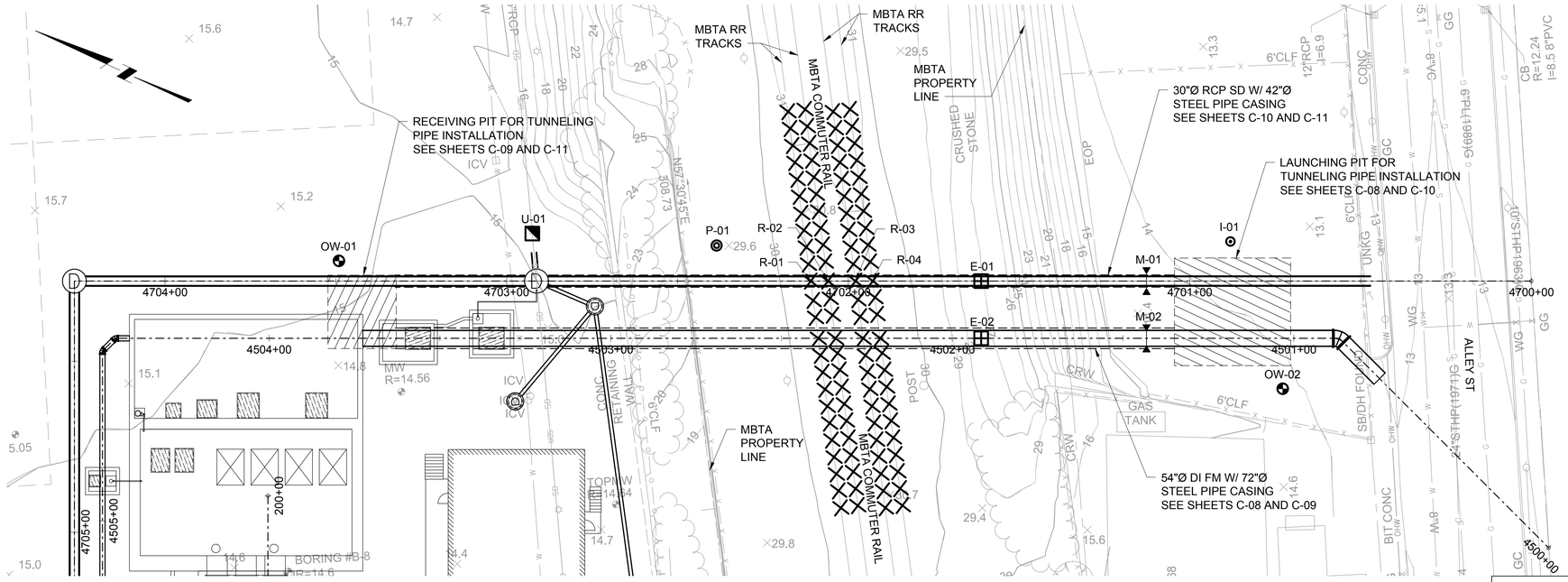

PLAN

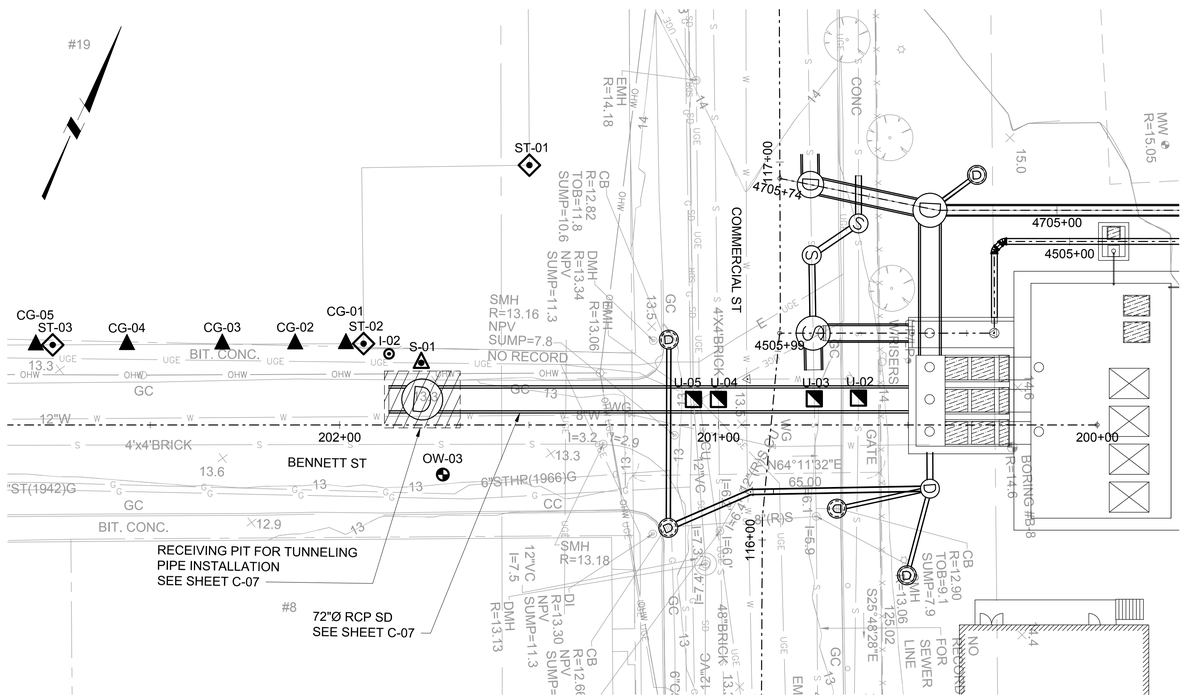

PLAN

INSTRUMENTATION SCHEDULE

TYPE	ID	STATION	DEPTH / LENGTH (FT)	NOTES
S-0# SETTLEMENT MONITORING POINT	S-01	201+78 (16'R)	NA	
U-0# UTILITY MONITORING POINT	U-01	4702+91 (14'R)	8.5	INSTALL ON 15"Ø RCP SD
	U-02	200+63 (7'R)	6	INSTALL ON 18" VCP SS
	U-03	200+75 (7'R)	4	INSTALL ON 48"Ø BRICK CS
	U-04	201+00 (7'R)	4	INSTALL ON 48"Ø BRICK CS
	U-05	201+07 (7'R)	5	INSTALL ON 12"Ø VCP SS
E-0# EXTENSOMETER	E-01	4701+61 (0'R)	NA	
	E-02	4501+92 (0'R)	NA	
M-0# MONITORING POINT ARRAY	M-01	4701+13 (0'R)	NA	
	M-02	4501+43 (0'R)	NA	
I-0# INCLINOMETER	I-01	4700+88 (12'R)	NA	
	I-02	201+87 (19'R)	NA	
OW-0# OBSERVATION WELL	OW-01	4703+49 (6'R)	25	ENGINEER TO DETERMINE IF NEARBY EXISTING OW TO BE USED
	OW-02	4501+03 (15'L)	25	
	OW-3	201+73 (13'L)	30	
CG-0# CRACK GAUGE	CG-01	201+98 (21'R)	NA	INSTALL ON BUILDING AT #19 BENNETT
	CG-02	202+12 (21'R)	NA	INSTALL ON BUILDING AT #19 BENNETT
	CG-03	202+31 (21'R)	NA	INSTALL ON BUILDING AT #19 BENNETT
	CG-04	202+56 (21'R)	NA	INSTALL ON BUILDING AT #19 BENNETT
	CG-05	202+80 (21'R)	NA	INSTALL ON BUILDING AT #19 BENNETT
ST-0# STRUCTURAL MONITORING POINT	ST-01	201+50 (69'R)	NA	INSTALL ON BUILDING AT #19 BENNETT
	ST-02	201+94 (21'R)	NA	INSTALL ON BUILDING AT #19 BENNETT
	ST-03	202+76 (21'R)	NA	INSTALL ON BUILDING AT #19 BENNETT
R-0# REFLECTORLESS SURVEY POINT ROW	R-01	4702+11 (0'R)	117	INSTALL REFLECTORLESS SURVEY POINTS EVERY 5-FT ALONG RR TRACKS
	R-02	4702+06 (0'R)	117	
	R-03	4701+98 (0'R)	117	
	R-04	4701+93 (0'R)	117	
P-0# POLE FOR AUTOMATIC TOTAL STATION	P-01	4702+38 (10'R)	NA	CONTRACTOR TO COORDINATE WITH MBTA FOR ACCESS AND LOCATION

0 20 40
SCALE IN FEET

REV	DATE	BY	DESCRIPTION

SCALE: 1"=20'

WARNING: 0 ½ 1 — IF THIS BAR DOES NOT MEASURE 1" THEN DRAWING IS NOT TO SCALE

DATE: JULY 31, 2019
DRAWN BY: Z HALSTEAD
DESIGNED BY: N GOODENOW
CHECKED BY:
APPROVED BY:

60% DESIGN
NOT FOR CONSTRUCTION

This document is an interim document and not suitable for construction. As an interim document, it may contain data that is potentially inaccurate or incomplete and is not to be relied upon without the express written consent of the preparer.

Stantec

LYNN WATER & SEWER COMMISSION

LYNN WATER AND SEWER COMMISSION
PHASE 3 WEST LYNN SEWER SEPARATION
CIVIL
GEOTECHNICAL INSTRUMENTATION PLAN

SHEET C-04

195130174

BY: HALSTEAD, ZACHARY
PLOT DATE: Thursday, July 18, 2019
DWG FILE: C:\pwworkdir\d0535805\PHASE 3_BSS_C_C04.dwg

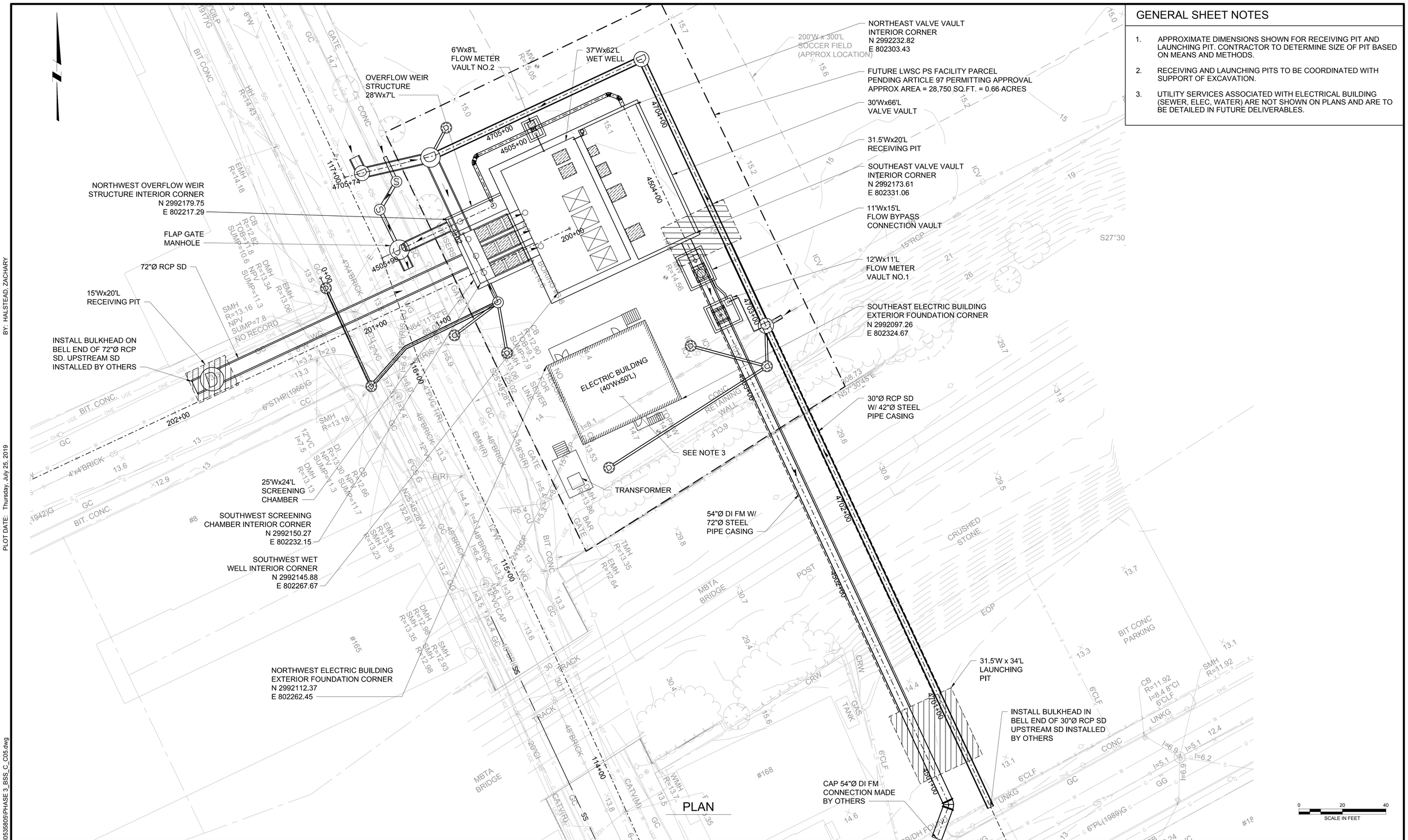

PLAN

GENERAL SHEET NOTES

1. APPROXIMATE DIMENSIONS SHOWN FOR RECEIVING PIT AND LAUNCHING PIT. CONTRACTOR TO DETERMINE SIZE OF PIT BASED ON MEANS AND METHODS.
2. RECEIVING AND LAUNCHING PITS TO BE COORDINATED WITH SUPPORT OF EXCAVATION.
3. UTILITY SERVICES ASSOCIATED WITH ELECTRICAL BUILDING (SEWER, ELEC, WATER) ARE NOT SHOWN ON PLANS AND ARE TO BE DETAILED IN FUTURE DELIVERABLES.

REV	DATE	BY	DESCRIPTION

SCALE: 1"=20'

WARNING: 0 ½ 1 — IF THIS BAR DOES NOT MEASURE 1" THEN DRAWING IS NOT TO SCALE

DATE	JULY 31, 2019
DRAWN BY	Z HALSTEAD
DESIGNED BY	Z HALSTEAD
CHECKED BY	
APPROVED BY	

60% DESIGN
NOT FOR CONSTRUCTION

This document is an interim document and not suitable for construction. As an interim document, it may contain data that is potentially inaccurate or incomplete and is not to be relied upon without the express written consent of the preparer.

Stantec

LYNN WATER & SEWER COMMISSION

LYNN WATER AND SEWER COMMISSION

PHASE 3 WEST LYNN SEWER SEPARATION

CIVIL
OVERALL SITE PLAN

SHEET C-05

195130174

DWG FILE: C:\pwworkdir\d0535805\PHASE 3_BSS_C_C05.dwg

PLOT DATE: Thursday, July 25, 2019

BY: HALSTEAD, ZACHARY

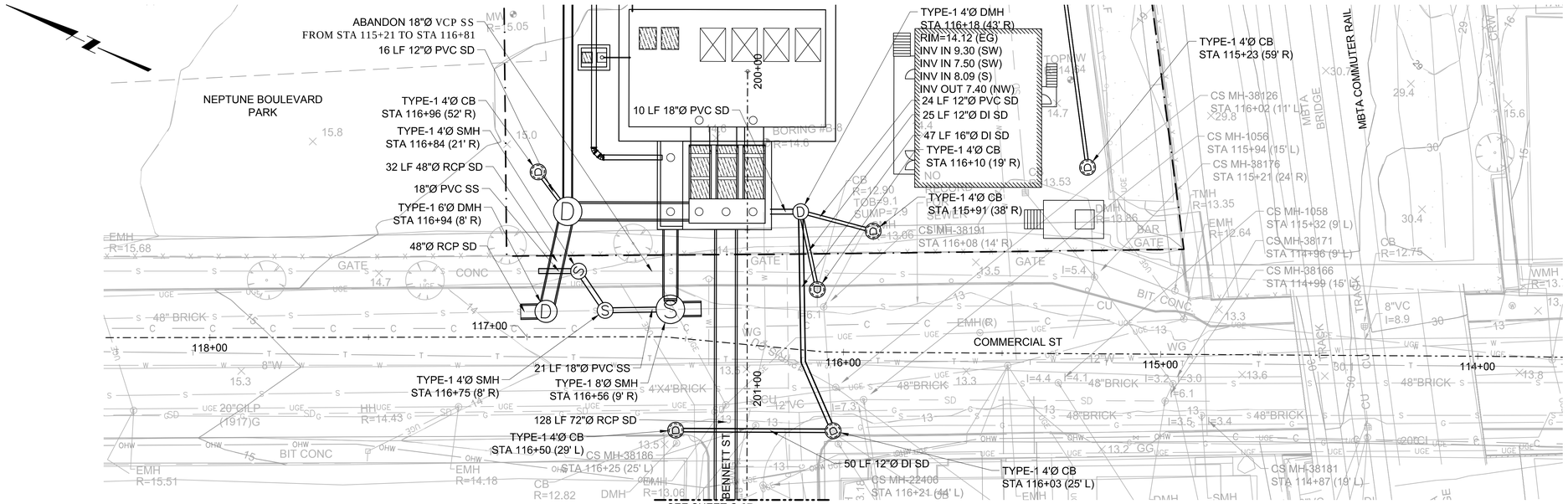

PLAN

SCALE: 1"=20'

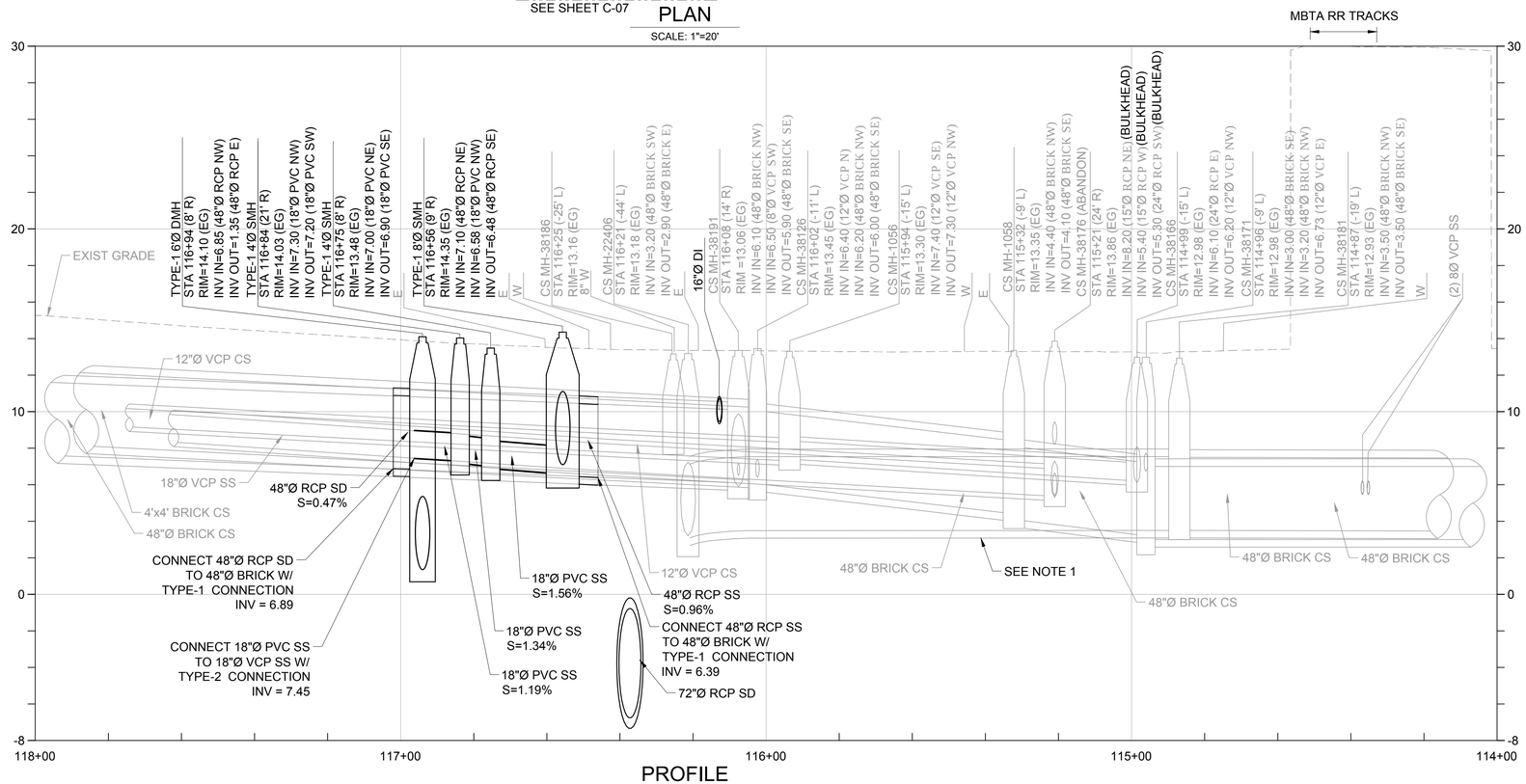

PROFILE

HORIZONTAL SCALE: 1"=20'
VERTICAL SCALE: 1"=4'

KEY PLAN

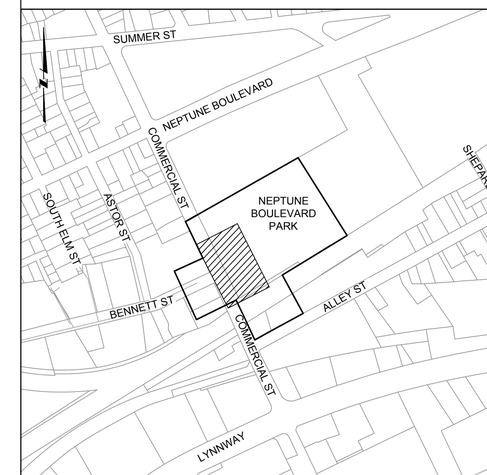

GENERAL SHEET NOTES

1. RECORDS INDICATE CS INSTALLED WITH REVERSE PITCH AS COMPARED TO FLOW DIRECTION.

HORZ 0 20 40
VERT 0 4 8
SCALE IN FEET

REV	DATE	BY	DESCRIPTION

SCALE: AS SHOWN

WARNING: 0 ½ 1 — IF THIS BAR DOES NOT MEASURE 1" THEN DRAWING IS NOT TO SCALE

DATE: JULY 31, 2019
DRAWN BY: A PATERIYA
DESIGNED BY: Z HALSTEAD
CHECKED BY:
APPROVED BY:

60% DESIGN
NOT FOR CONSTRUCTION

This document is an interim document and not suitable for construction. As an interim document, it may contain data that is potentially inaccurate or incomplete and is not to be relied upon without the express written consent of the preparer.

Stantec

LYNN WATER & SEWER COMMISSION

LYNN WATER AND SEWER COMMISSION

PHASE 3 WEST LYNN SEWER SEPARATION

CIVIL - PLAN AND PROFILE
COMMERCIAL ST STA 114+00 TO STA 118+00

SHEET C-06

195130174

BY: BHOSALE, VARSHA
PLOT DATE: Thursday, July 18, 2019
DWG FILE: C:\pwworkdir\d0535805\PHASE 3_BSS_C_C06.dwg

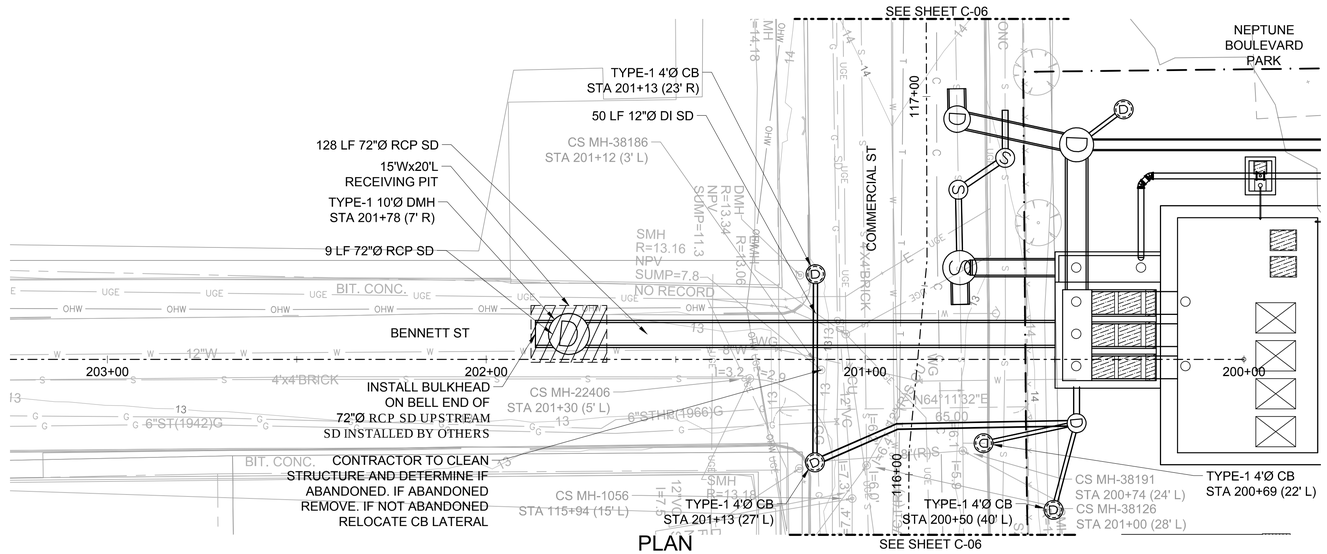

PLAN

SCALE: 1"=20'

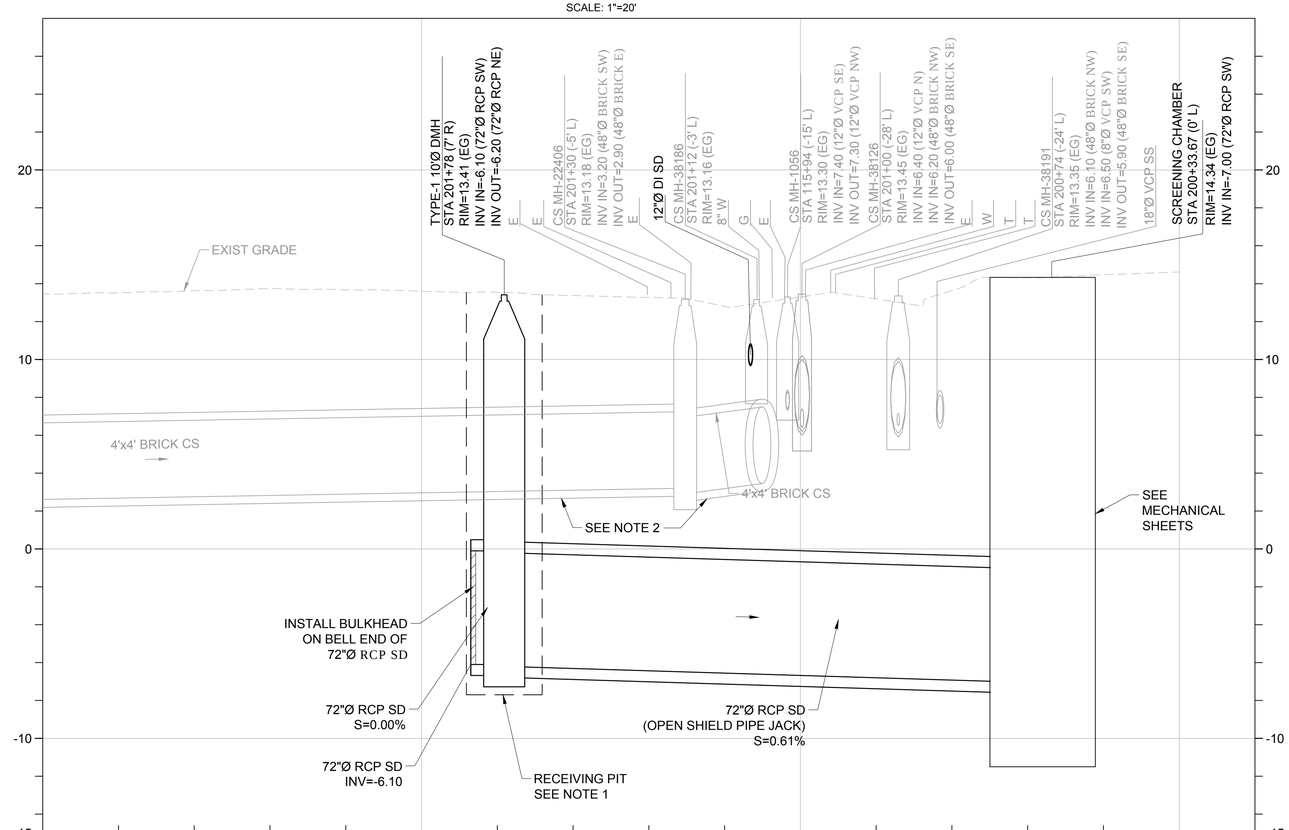

PROFILE

HORIZONTAL SCALE: 1"=20'
VERTICAL SCALE: 1"=4'

KEY PLAN

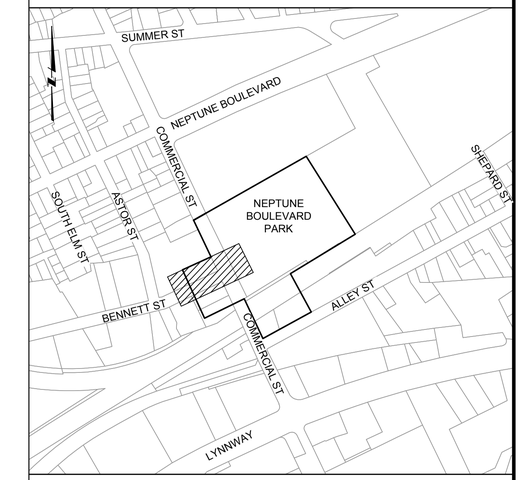

GENERAL SHEET NOTES

1. APPROXIMATE DIMENSIONS SHOWN FOR RECEIVING PIT. CONTRACTOR TO DETERMINE SIZE OF PIT BASED ON MEANS AND METHODS.
2. RECORDS INDICATE CS INSTALLED WITH REVERSE PITCH AS COMPARED TO FLOW DIRECTION.

HORZ 0 20 40
VERT 0 4 8
SCALE IN FEET

REV	DATE	BY	DESCRIPTION

SCALE: AS SHOWN

WARNING: 0 ½ 1 — IF THIS BAR DOES NOT MEASURE 1" THEN DRAWING IS NOT TO SCALE

DATE: JULY 31, 2019
DRAWN BY: A PATERIYA
DESIGNED BY: Z HALSTEAD
CHECKED BY:
APPROVED BY:

60% DESIGN
NOT FOR CONSTRUCTION

This document is an interim document and not suitable for construction. As an interim document, it may contain data that is potentially inaccurate or incomplete and is not to be relied upon without the express written consent of the preparer.

Stantec

LYNN WATER & SEWER COMMISSION

LYNN WATER AND SEWER COMMISSION
PHASE 3 WEST LYNN SEWER SEPARATION
CIVIL - PLAN AND PROFILE
BENNETT ST STA 200+00 TO STA 203+00

SHEET C-07

195130174

DWG FILE: C:\pwworkdir\d0535805\PHASE 3_ BSS_C_C07.dwg
PLOT DATE: Friday, July 26, 2019
BY: HALSTEAD, ZACHARY

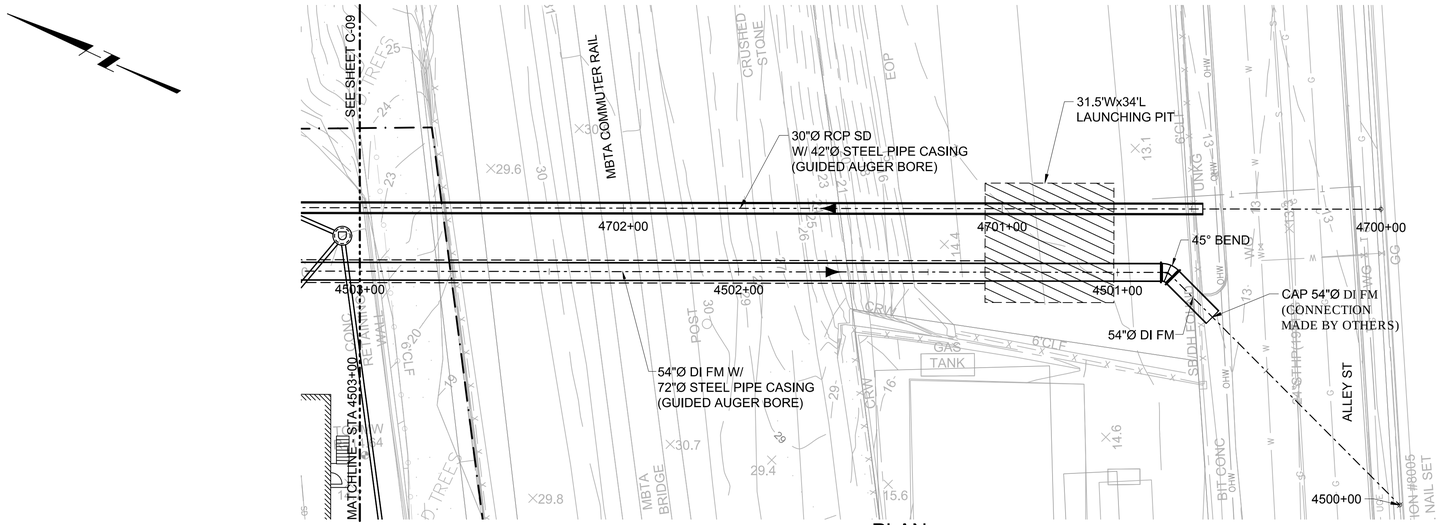

PLAN

SCALE: 1"=20'

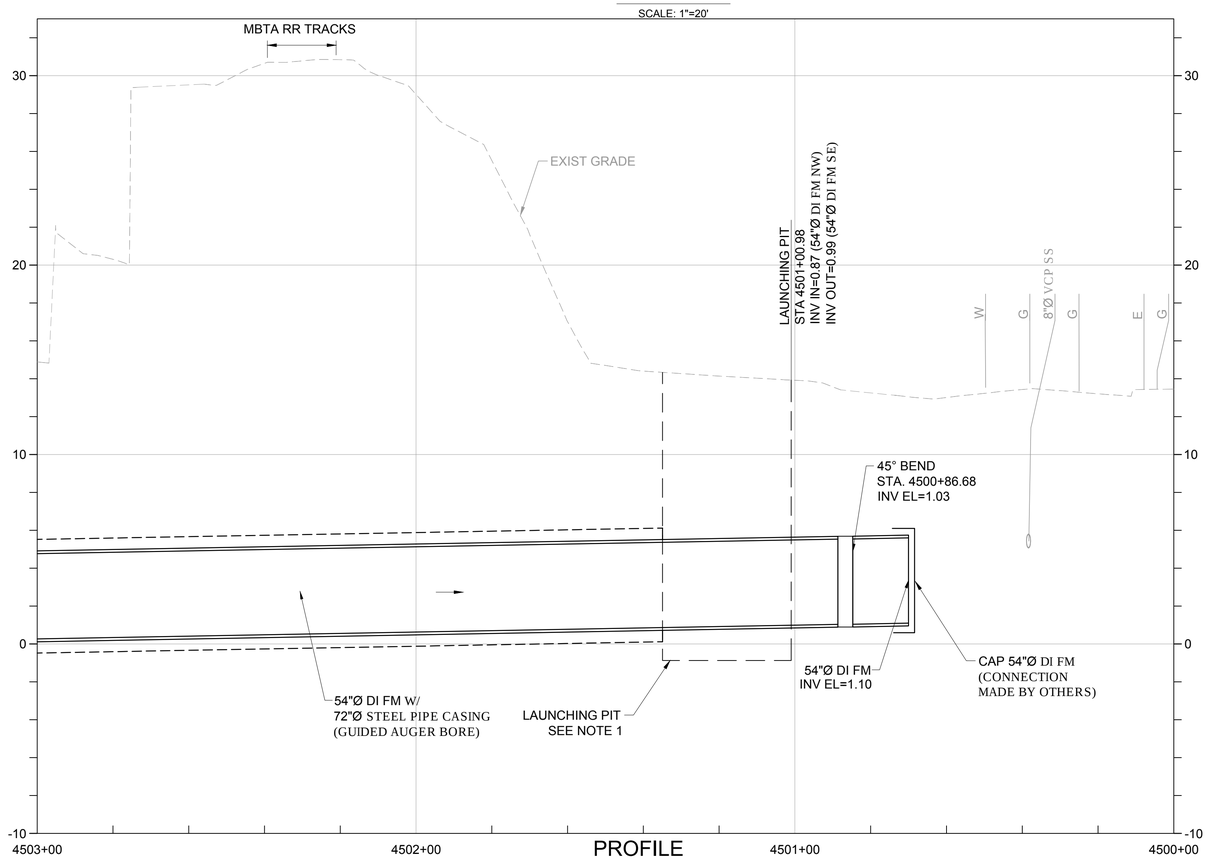

PROFILE

HORIZONTAL SCALE: 1"=20'
VERTICAL SCALE: 1"=4'

KEY PLAN

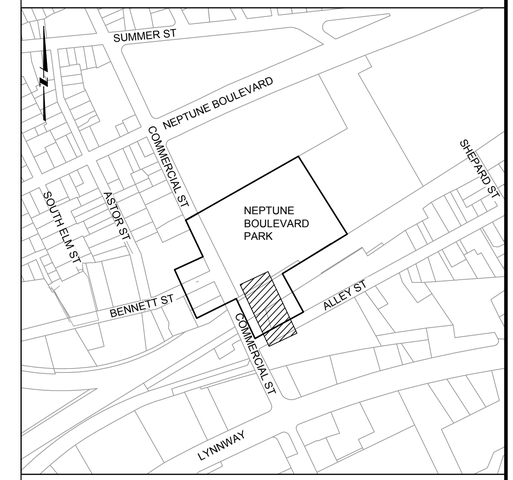

GENERAL SHEET NOTES

1. APPROXIMATE DIMENSIONS SHOWN FOR LAUNCHING PIT. CONTRACTOR TO DETERMINE SIZE OF PIT BASED ON MEANS AND METHODS.

HORZ 0 20 40
VERT 0 4 8
SCALE IN FEET

REV	DATE	BY	DESCRIPTION

SCALE: AS SHOWN

WARNING: 0 ½ 1 — IF THIS BAR DOES NOT MEASURE 1" THEN DRAWING IS NOT TO SCALE

DATE: JULY 31, 2019
DRAWN BY: A PATERIYA
DESIGNED BY: Z HALSTEAD
CHECKED BY:
APPROVED BY:

60% DESIGN
NOT FOR CONSTRUCTION

This document is an interim document and not suitable for construction. As an interim document, it may contain data that is potentially inaccurate or incomplete and is not to be relied upon without the express written consent of the preparer.

Stantec

LYNN WATER & SEWER COMMISSION

LYNN WATER AND SEWER COMMISSION

PHASE 3 WEST LYNN SEWER SEPARATION

CIVIL - PLAN AND PROFILE
YARD PIPING STA 4500+00 TO STA 4503+00

SHEET C-08

195130174

DWG FILE: C:\pwworkdir\d0535805\PHASE 3_BSS_C_C08.dwg
PLOT DATE: Friday, July 26, 2019
BY: HALSTEAD, ZACHARY

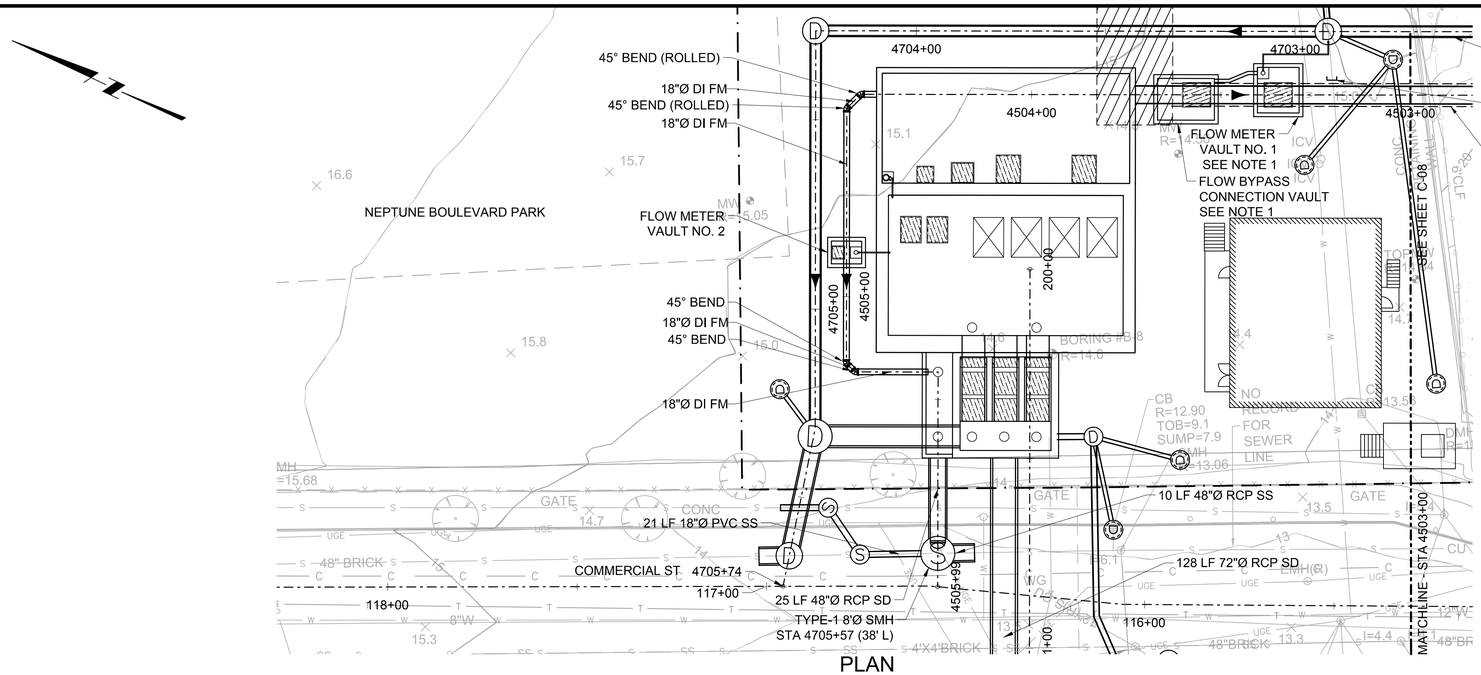

PLAN

SCALE: 1"=20'

KEY PLAN

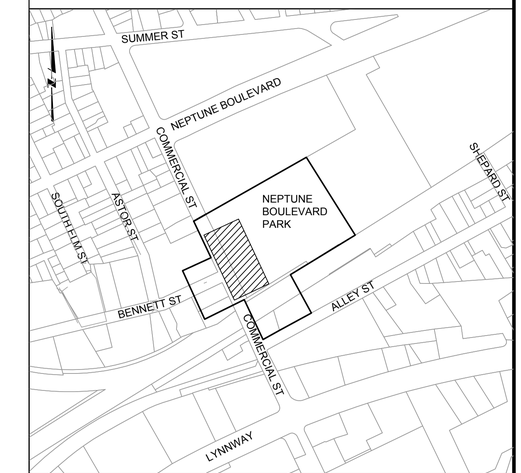

GENERAL SHEET NOTES

1. VAULTS TO BE CONSTRUCTED AFTER TUNNELING WORK IS COMPLETE.
2. APPROXIMATE DIMENSIONS SHOWN FOR RECEIVING PIT. CONTRACTOR TO DETERMINE SIZE OF PIT BASED ON MEANS AND METHODS.

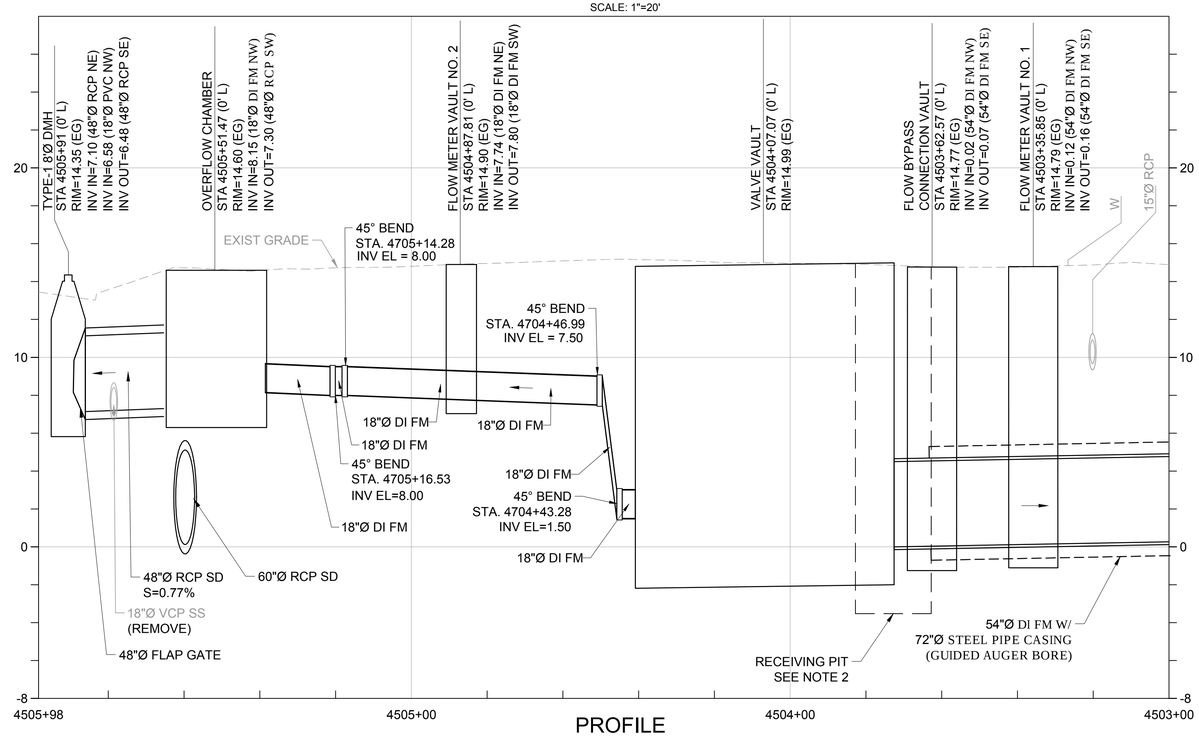

PROFILE

HORIZONTAL SCALE: 1"=20'
VERTICAL SCALE: 1"=4'

HORZ 0 20 40
VERT 0 4 8
SCALE IN FEET

REV	DATE	BY	DESCRIPTION

SCALE: AS SHOWN

WARNING: 0 ½ 1 — IF THIS BAR DOES NOT MEASURE 1" THEN DRAWING IS NOT TO SCALE

DATE	JULY 31, 2019
DRAWN BY	A PATERIYA
DESIGNED BY	Z HALSTEAD
CHECKED BY	
APPROVED BY	

60% DESIGN
NOT FOR CONSTRUCTION

This document is an interim document and not suitable for construction. As an interim document, it may contain data that is potentially inaccurate or incomplete and is not to be relied upon without the express written consent of the preparer.

Stantec

LYNN WATER & SEWER COMMISSION

LYNN WATER AND SEWER COMMISSION

PHASE 3 WEST LYNN SEWER SEPARATION

CIVIL - PLAN AND PROFILE
YARD PIPING STA 4503+00 TO STA 4505+93

SHEET C-09

195130174

DWG FILE: C:\pwworkdir\d0535805\PHASE 3_BSS_C_C09.dwg
PLOT DATE: Friday, July 26, 2019
BY: HALSTEAD, ZACHARY

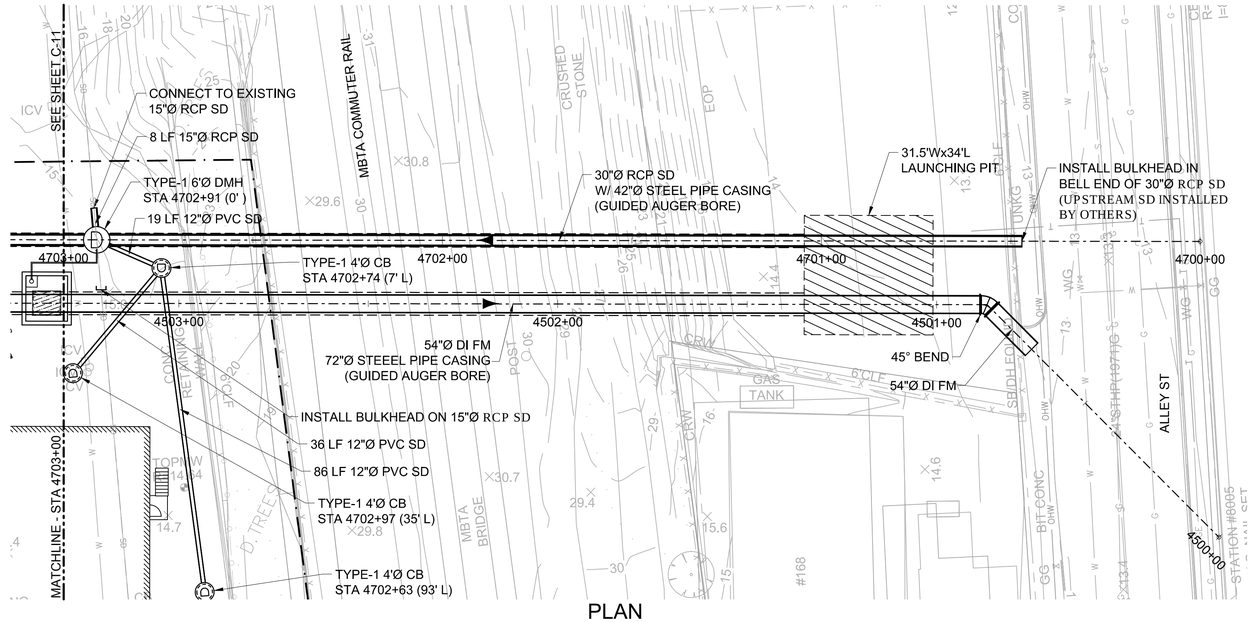

PLAN

SCALE: 1"=20'

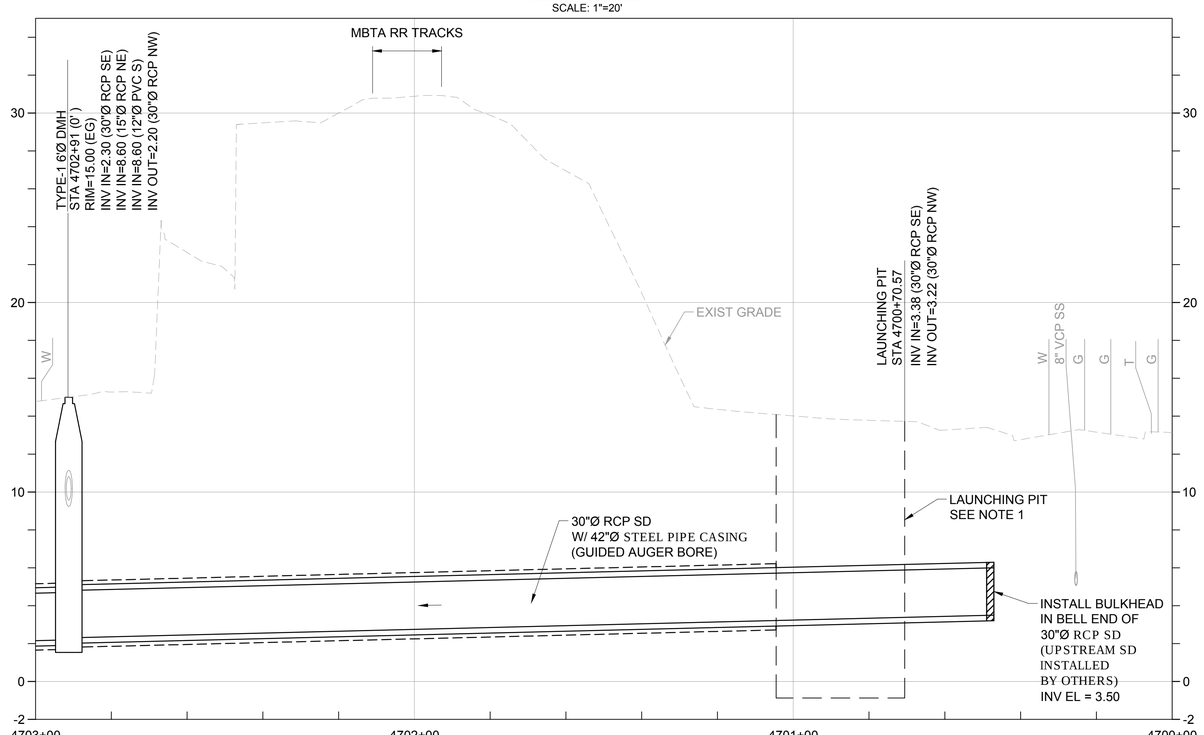

PROFILE

HORIZONTAL SCALE: 1"=20'
VERTICAL SCALE: 1"=4'

KEY PLAN

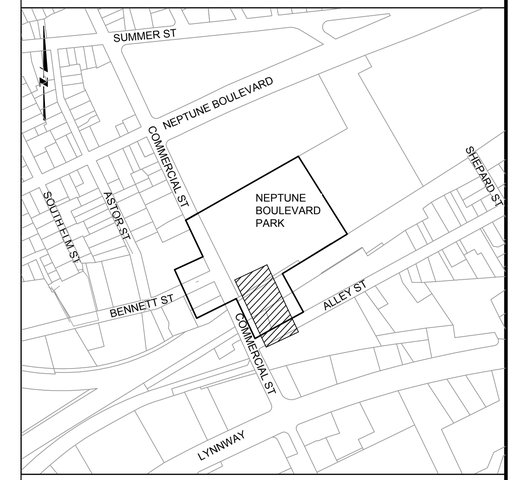

GENERAL SHEET NOTES

1. APPROXIMATE DIMENSIONS SHOWN FOR LAUNCHING PIT. CONTRACTOR TO DETERMINE SIZE OF PIT BASED ON MEANS AND METHODS.

HORZ 0 20 40
VERT 0 4 8
SCALE IN FEET

REV	DATE	BY	DESCRIPTION

SCALE: AS SHOWN

WARNING: 0 ½ 1 — IF THIS BAR DOES NOT MEASURE 1" THEN DRAWING IS NOT TO SCALE

DATE: JULY 31, 2019
DRAWN BY: A PATERIYA
DESIGNED BY: Z HALSTEAD
CHECKED BY:
APPROVED BY:

60% DESIGN
NOT FOR CONSTRUCTION

This document is an interim document and not suitable for construction. As an interim document, it may contain data that is potentially inaccurate or incomplete and is not to be relied upon without the express written consent of the preparer.

Stantec

LYNN WATER & SEWER COMMISSION

LYNN WATER AND SEWER COMMISSION
PHASE 3 WEST LYNN SEWER SEPARATION
CIVIL - PLAN AND PROFILE
YARD PIPING STA 4700+00 TO STA 4703+00

SHEET C-10

195130174

BY: HALSTEAD, ZACHARY
PLOT DATE: Friday, July 26, 2019
DWG FILE: C:\pwworkdir\d0535805\PHASE 3_BSS_C_C10.dwg

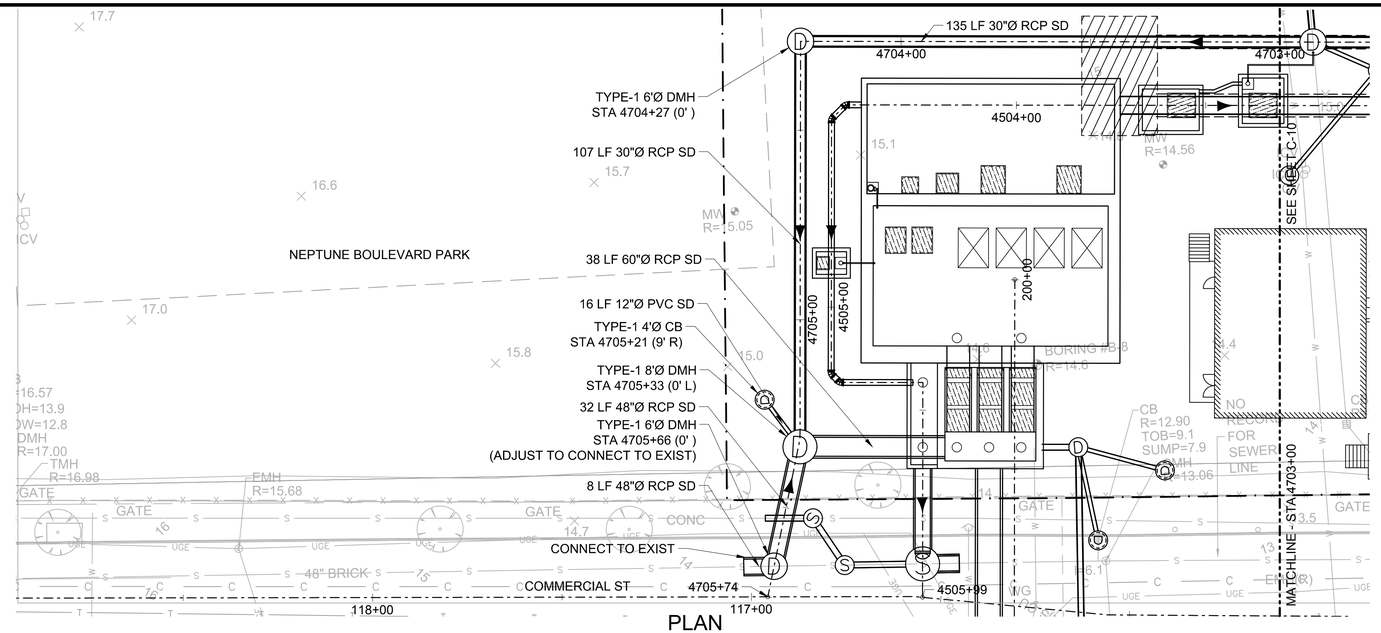

PLAN

SCALE: 1"=20'

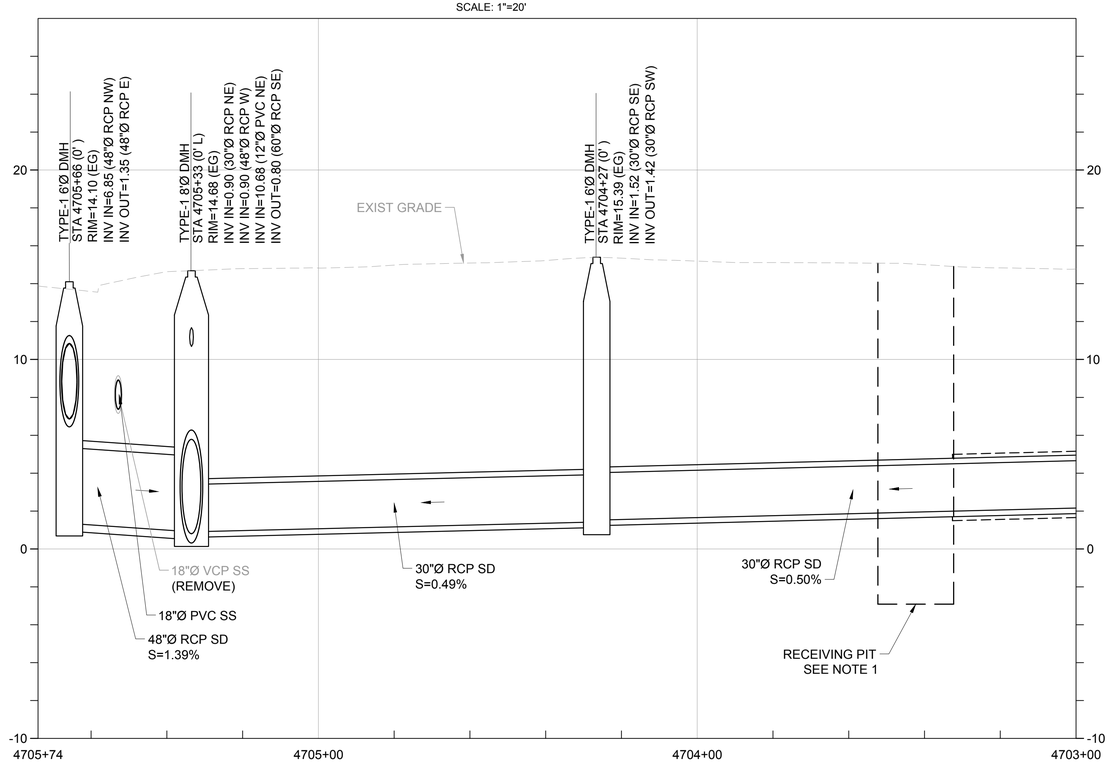

PROFILE

HORIZONTAL SCALE: 1"=20'
VERTICAL SCALE: 1"=4'

KEY PLAN

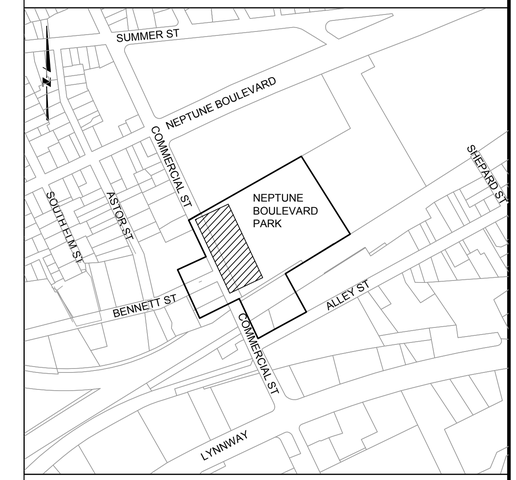

GENERAL SHEET NOTES

1. APPROXIMATE DIMENSIONS SHOWN FOR RECEIVING PIT. CONTRACTOR TO DETERMINE SIZE OF PIT BASED ON MEANS AND METHODS.

HORZ 0 20 40
VERT 0 4 8
SCALE IN FEET

REV	DATE	BY	DESCRIPTION

SCALE: AS SHOWN

WARNING: 0 ½ 1 — IF THIS BAR DOES NOT MEASURE 1" THEN DRAWING IS NOT TO SCALE

DATE: JULY 31, 2019
DRAWN BY: A PATERIYA
DESIGNED BY: Z HALSTEAD
CHECKED BY:
APPROVED BY:

60% DESIGN
NOT FOR CONSTRUCTION

This document is an interim document and not suitable for construction. As an interim document, it may contain data that is potentially inaccurate or incomplete and is not to be relied upon without the express written consent of the preparer.

Stantec

LYNN WATER & SEWER COMMISSION

LYNN WATER AND SEWER COMMISSION

PHASE 3 WEST LYNN SEWER SEPARATION

CIVIL - PLAN AND PROFILE
YARD PIPING STA 4703+00 TO STA 4705+74

SHEET C-11

195130174

DWG FILE: C:\pwworkdir\d0535805\PHASE 3_BSS_C_C11.dwg
PLOT DATE: Thursday, July 25, 2019
BY: HALSTEAD, ZACHARY

GENERAL NOTES

GENERAL

THESE NOTES ARE GENERAL AND APPLY TO THE ENTIRE PROJECT EXCEPT WHERE SPECIFICALLY INDICATED OTHERWISE.

STRUCTURAL DIMENSIONS CONTROLLED BY OR RELATED TO MECHANICAL OR ELECTRICAL EQUIPMENT SHALL BE COORDINATED BY THE CONTRACTOR PRIOR TO CONSTRUCTION. BOLT SIZES, TYPES, AND PATTERNS SHALL BE VERIFIED WITH THE MANUFACTURER. ALL BOLT PATTERNS SHALL BE TEMPLATED TO ENSURE ACCURACY OF PLACEMENT.

MECHANICAL AND ELECTRICAL EQUIPMENT SUPPORTS, ANCHORAGES, OPENINGS, RECESSES AND REVEALS NOT SHOWN ON THE STRUCTURAL DRAWINGS BUT REQUIRED BY OTHER CONTRACT DRAWINGS, SHALL BE PROVIDED FOR PRIOR TO PLACING CONCRETE.

STRUCTURAL DRAWINGS SHALL BE USED IN COORDINATION WITH MECHANICAL, ELECTRICAL, ARCHITECTURAL, CIVIL DRAWINGS AND SHOP DRAWINGS PROVIDED BY MANUFACTURERS OF EQUIPMENT.

STRUCTURES HAVE BEEN DESIGNED FOR OPERATIONAL, HYDROSTATIC, AND BACKFILL LOADS ON THE COMPLETED STRUCTURES. THE STRUCTURES HAVE NOT BEEN DESIGNED TO RESIST THESE LOADS WHILE ONLY PARTIALLY CONSTRUCTED. DURING CONSTRUCTION, THE STRUCTURES SHALL BE PROTECTED FROM ALL CONSTRUCTION LOADS BY BRACING AND BALANCING UNTIL ALL STRUCTURAL ELEMENTS ARE IN PLACE, AND ALL CONCRETE HAS REACHED THE SPECIFIED 28 DAY COMPRESSIVE STRENGTH. OVERLOADING OF ANY STRUCTURAL ELEMENT IS PROHIBITED.

UNLESS OTHERWISE SHOWN, ON ALL STRUCTURAL DRAWINGS THE FINISHED GRADE AROUND STRUCTURES IS SHOWN THUS, INDICATING EITHER GROUND SURFACE, TOP OF CONCRETE SLAB, OR AC PAVEMENT. FOR DETAILS OF FINISH SURFACES, SEE CIVIL AND ARCHITECTURAL DRAWINGS.

STRUCTURAL STEEL

STEEL CONSTRUCTION SHALL CONFORM TO THE SPECIFICATIONS AND STANDARDS AS CONTAINED IN THE FOURTEENTH EDITION OF THE AISC STEEL CONSTRUCTION MANUAL.

STRUCTURAL WIDE FLANGE SHAPES SHALL BE STEEL MEETING ASTM A-992 SPECIFICATIONS.

OTHER SHAPES, BARS, PLATES AND SHEETS SHALL BE OF STEEL MEETING ASTM A-36 SPECIFICATIONS.

PIPE, PIPE COLUMNS, AND BOLLARDS SHALL BE OF STEEL MEETING ASTM A-53, TYPE E OR S, GRADE B STANDARD WEIGHT, UNO

HSS SHALL BE OF STEEL MEETING ASTM A-500 GRADE B.

STEEL JOISTS, BEAMS, AND GIRDERS SHALL NOT BE RELOCATED WITHOUT APPROVAL BY THE ENGINEER.

ALL WELDING SHALL BE BY THE SHIELDED ARC METHOD AND SHALL CONFORM TO AWS CODE FOR ARC AND GAS WELDING IN BUILDING CONSTRUCTION. QUALIFICATIONS OF WELDERS SHALL BE IN ACCORDANCE WITH THE SPECIFICATIONS FOR STANDARD QUALIFICATION PROCEDURE OF THE AWS.

CONCRETE (EXCEPT PRECAST CONCRETE)

UNLESS OTHERWISE NOTED OR SPECIFIED, ALL STRUCTURAL CONCRETE SHALL DEVELOP A MINIMUM COMPRESSIVE STRENGTH OF 4500 PSI IN 28 DAYS.

REINFORCEMENT STEEL SHALL BE DEFORMED BARS CONFORMING IN QUALITY TO THE REQUIREMENTS OF ASTM A-615, "SPECIFICATIONS FOR DEFORMED AND PLAIN CARBON STEEL BARS FOR CONCRETE REINFORCEMENT", GRADE 60

COLUMN SPIRALS SHALL CONFORM TO ASTM A-615, "DEFORMED AND PLAIN CARBON STEEL BARS FOR CONCRETE REINFORCEMENT, GRADE 60 OR ASTM A1064 "SPECIFICATION FOR CARBON STEEL WIRE AND WELDED WIRE REINFORCEMENT, PLAIN AND DEFORMED,FOR CONCRETE REINFORCEMENT".

ALL DETAILING, FABRICATION AND PLACING OF REINFORCING BARS, UNLESS OTHERWISE INDICATED, SHALL BE IN ACCORDANCE WITH ACISP-066, "ACI DETAILING MANUAL 2004".

TOLERANCES IN PLACING REINFORCEMENT SHALL BE:
+/- 3/8 INCH FOR MEMBERS WITH DEPTH D <= 8 INCHES
+/- 1/2 INCH FOR MEMBERS WITH DEPTH D > 8 INCHES

ALL CONSTRUCTION JOINTS, SHALL BE ROUGH AND THOROUGHLY CLEANED FOR BOND.

LOCATION OF ALL CONSTRUCTION JOINTS SHALL BE AS SHOWN ON THE DRAWINGS OR APPROVED BY THE ENGINEER. ALL CONSTRUCTION JOINTS LOCATED ON THE DRAWINGS, OR REQUIRED FOR CONSTRUCTION BUT NOT SHOWN ON THE DRAWINGS, SHALL HAVE A 6" FLATSTRIP WATERSTOP IF IN CONTACT WITH WATER. IN ADDITION, JOINTS IN ALL SLABS COVERED WITH WATER SHALL HAVE BOTH A 6" FLATSTRIP WATERSTOP AND A SEALANT GROOVE.

DOWELS, PIPE, WATERSTOPS AND OTHER INSTALLED MATERIALS AND ACCESSORIES SHALL BE HELD SECURELY IN POSITION WHILE CONCRETE IS BEING PLACED.

UNLESS OTHERWISE INDICATED, ASIDE FROM NORMAL ACCESSORIES USED TO HOLD REINFORCING BARS FIRMLY IN POSITION, THE FOLLOWING SHALL BE ADDED:

A) IN SLABS #5 RISER BARS AT 36 INCHES OC MAXIMUM TO SUPPORT TOP REINFORCING BARS.

B) IN WALLS WITH 2 CURTAINS #3 U OR Z SHAPE SPACERS AT 6 FEET OC EACH WAY.

VERTICAL REINFORCEMENT FOR CONCRETE OR MASONRY SHALL BE SPLICED WITH DOWEL BARS OF THE SAME SIZE AND SPACING FROM THE FOUNDATION USING A STANDARD SPLICE LENGTH UNLESS INDICATED OTHERWISE.

SEALANT SHALL BE PLACED AT THE TOP OF ALL JOINTS RECEIVING EXPANSION JOINT FILLER. SEALANT DEPTH SHALL BE THE JOINT FILL THICKNESS OR 1/2", WHICHEVER IS LESS.

ALL GROUT SHALL BE NON-SHRINK GROUT, UNLESS INDICATED OTHERWISE.

UNLESS OTHERWISE SHOWN CONCRETE WALLS AND SLABS SHALL BE REINFORCED AS FOLLOWS: #4@12" EW , CENTER OF 6" SECTIONS; #5@12" EW, CENTER OF 8" SECTIONS; #4 @ 12" EW EF OF 10" SECTIONS; #5@12" EW EF OF 12" AND THICKER SECTIONS.

METAL CLIPS OR SUPPORTS SHALL NOT BE PLACED IN CONTACT WITH THE FORMS OR THE SUBGRADE. CONCRETE BLOCKS (OR DOBIES) SUPPORTING BARS ON SUBGRADE SHALL BE IN SUFFICIENT NUMBERS TO SUPPORT THE BARS WITHOUT SETTLEMENT, BUT IN NO CASE SHALL SUCH SUPPORT BE CONTINUOUS.

DOWELS SHALL BE WIRED OR OTHERWISE HELD IN POSITION. THEY SHALL NOT BE SHOVED INTO FRESHLY PLACED CONCRETE.

UNLESS OTHERWISE INDICATED ON THE DRAWINGS, LAPS OF REINFORCEMENT SHALL BE AS SHOWN ON DETAIL S-415.

LOCATE TWO 3/4 INCH GALVANIZED RICHMOND ROCKET INSERTS, HOHMANN & BARNARD OR EQUAL, STRADDLING CENTERLINE OF EQUIPMENT OVER ALL PUMPS, METERS OR OTHER MECHANICAL UNITS OF MORE THAN 100 LBS, FOR INSERTING LIFTING EYES IF NOT OTHERWISE INDICATED.

REINFORCING BARS AND ACCESSORIES SHALL NOT BE IN CONTACT WITH ANY PIPE, PIPE FLANGE OR METAL PARTS EMBEDDED IN CONCRETE, A MINIMUM OF 2 INCHES CLEARANCE SHALL BE PROVIDED AT ALL TIMES.

ALL ITEMS EMBEDDED IN CONCRETE SHALL BE SPACED ON CENTER AT LEAST 3 TIMES THEIR OUTSIDE DIMENSION. THE OUTSIDE DIMENSION SHALL NOT EXCEED ONE THIRD OF THE MEMBER THICKNESS

UNLESS OTHERWISE SHOWN ON THE DRAWINGS CONCRETE COVER FOR REINFORCING BARS SHALL BE AS FOLLOWS:

FOR CONCRETE PLACED AGAINST EARTH (SEE CONSTRUCTION JOINT DETAILS FOR THIN SLABS-ON-GRADE, BOTTOM COVER MAY BE LESS THAN 3" IF SO INDICATED) — 3"

FOR SURFACES IN CONTACT WITH WATER OR WEATHER AND FORMED SURFACES IN CONTACT WITH EARTH — 2"

FOR CONCRETE NOT EXPOSED TO WEATHER, OR IN CONTACT WITH WATER OR EARTH — 1 1/2"

UNLESS OTHERWISE NOTED, WALLS AND SLABS SHOWN WITH A SINGLE LAYER OF REINFORCEMENT SHALL HAVE THAT REINFORCEMENT CENTERED

SLABS WITH SLOPING SURFACES SHALL HAVE THE INDICATED SLAB THICKNESS MAINTAINED AS THE MINIMUM. SLAB-ON-GRADE BOTTOMS MAY EITHER SLOPE WITH THE TOP SURFACE OR BE LEVEL. REINFORCING IN SLABS WITH SLOPING SURFACES SHALL BE PLACED AT THE REQUIRED CLEARANCE FROM THE SLAB SURFACES.

TESTING HYDRAULIC STRUCTURES

WHEN FILLING THE STRUCTURES WITH WATER FOR THE TEST REQUIRED IN THE SPECIFICATIONS, ALL VARIOUS BASINS LOCATED IN THE SAME STRUCTURE SHALL BE FILLED SIMULTANEOUSLY AT THE SAME RATE IN ORDER TO KEEP THE SAME LEVEL IN EACH BASIN.

STRUCTURAL STANDARD DETAILS

DETAILS ON GS SHEETS ARE PART OF STANTEC'S STRUCTURAL STANDARD DETAILS.

THESE DETAILS ARE TO BE USED WHEN REFERRED TO OR WHEN NO OTHER MORE RESTRICTIVE OR DIFFERENT DETAILS ARE INDICATED ON THE DRAWINGS.

DETAILS NOT PERTAINING TO THE PROJECT ARE MARKED THUS

CONDUIT COORDINATION NOTES

REFER TO THE NOTES BELOW, AND ELECTRICAL AND STRUCTURAL DRAWINGS AND SPECIFICATIONS, FOR CONDUIT PLACEMENT REQUIREMENTS. CONDUIT NOT IN CONFORMANCE WITH THESE REQUIREMENTS SHALL NOT BE INSTALLED WITHOUT WRITTEN APPROVAL FROM THE STRUCTURAL ENGINEER OF RECORD.

FOR CONDUIT RUNNING IN THE PLANE OF CONCRETE SLABS OR WALLS:

THE OUTSIDE DIAMETER OF THE CONDUIT SHALL NOT EXCEED ONE-THIRD OF MEMBER THICKNESS;

CONDUIT SHALL NOT BE SPACED CLOSER THAN 3 OUTSIDE DIAMETERS ON CENTER;

CONDUIT SHALL BE LOCATED ONLY WITHIN THE MIDDLE THIRD OF THE MEMBER ;

CONDUIT SHALL NOT BE SUPPORTED DIRECTLY ON REBAR.

FOR CONDUIT RUNNING THROUGH THE PLANE OF CONCRETE SLABS OR WALLS:

COORDINATE CONDUIT PLACEMENT TO AVOID OR MINIMIZE IMPACT TO REBAR PLACEMENT.

CONDUIT SHALL BE 2 INCHES MINIMUM CLEAR OF REBAR.

REBAR MAY BE SHIFTED 2 INCHES MAXIMUM TO AVOID CONDUIT.

WHERE REBAR MUST BE CUT TO ACCOMMODATE CONDUIT PLACEMENT, PROVIDE ADDITIONAL REINFORCEMENT PER DETAIL S-144 OR S-148, CONSIDERING THE CONDUIT PENETRATION(S) AS AN EQUIVALENT CIRCULAR OR RECTANGULAR OPENING, RESPECTIVELY.

CONDUIT SHALL NOT BE RUN IN OR THROUGH GRADE BEAMS.

REV 050218

ALUMINUM

ALUMINUM CONSTRUCTION SHALL BE IN ACCORDANCE WITH ALUMINUM ASSOCIATION ASM 35 - SPECIFICATION FOR ALUMINUM SHEET METAL WORK IN BUILDING CONSTRUCTION. ALUMINUM SURFACES SHALL BE PREVENTED FROM COMING IN DIRECT CONTACT WITH CONCRETE OR WITH METALS NOT COMPATIBLE WITH ALUMINUM, USING METHODS DESCRIBED IN THE SPECIFICATIONS.

MASONRY

CONCRETE BLOCK MASONRY SHALL BE NORMAL WEIGHT, HOLLOW UNITS CONFORMING TO ASTM C 90. SIZE OF UNITS, COLOR AND TEXTURE SHALL BE PER THE SPECIFICATIONS.

GROUT ALL CELLS CONTAINING REINFORCING OF CONCRETE BLOCK MASONRY UNLESS OTHERWISE NOTED ON DRAWINGS.

UNLESS OTHERWISE INDICATED, LAPS OF REINFORCEMENT IN CMU SHALL BE AS SHOWN ON DETAIL S-415.

MORTAR SHALL BE IN ACCORDANCE WITH ASTM C 270, TYPE S, AND SHALL HAVE A MINIMUM COMPRESSIVE STRENGTH AT 28 DAYS OF 1800 PSI.

GROUT SHALL BE IN ACCORDANCE WITH ASTM C 476 , AND SHALL HAVE A MINIMUM COMPRESSIVE STRENGTH OF 2000 PSI.

SPECIAL INSPECTION SHALL BE PROVIDED PER THE STATEMENT OF SPECIAL INSPECTIONS FOR ALL MASONRY WORK

THE COMBINED MASONRY ASSEMBLAGE COMPRESSIVE STRENGTH AT 28 DAYS SHALL BE A MINIMUM OF f'm = 2000 PSI.

REINFORCEMENT SHALL BE TIED OR OTHERWISE SECURED IN POSITION PRIOR TO GROUTING.

ALL HORIZONTAL AND VERTICAL REINFORCEMENT SHALL BE CONTINUOUS OVER THE FULL EXTENT OF THE WALL WITH STANDARD SPLICES LOCATED AS NEEDED. WHERE IT IS NECESSARY TO INTERRUPT AN INDIVIDUAL BAR, AN EQUAL SIZED BAR SHALL BE LOCATED AS CLOSE AS POSSIBLE AND SHALL EXTEND A MINIMUM OF ONE SPLICE LENGTH BEYOND EACH SIDE OF THE INTERRUPTION.

PRECAST CONCRETE

THE CONTRACTOR SHALL DESIGN, DETAIL, FURNISH AND INSTALL PRECAST CONCRETE MEMBERS AS SHOWN AND PROVIDE DRAWINGS AND CALCULATIONS STAMPED BY A PROFESSIONAL ENGINEER REGISTERED IN THE STATE OF MASSACHUSETTS DRAWINGS AND CALCULATIONS SHALL BE SUBMITTED TO THE ENGINEER FOR REVIEW. THE DESIGN SHALL BE PER THE SPECIFICATIONS.

THE CONTRACTOR SHALL COORDINATE THE SIZE AND LOCATION OF ALL ROOF PENETRATIONS PRIOR TO FABRICATION.

DEFERRED SUBMITTALS:

DEFERRED SUBMITTALS ARE THOSE PORTIONS OF THE DESIGN WHICH ARE PROVIDED BY THE CONTRACTOR AND THEREFORE WERE NOT SUBMITTED AT THE TIME OF THE PERMIT APPLICATION, AND WHICH ARE TO BE SUBMITTED TO THE PERMITTING AGENCY PRIOR TO FABRICATION OR INSTALLATION OF THAT PORTION OF THE WORK.

NO WORK SHALL BE PERFORMED FOR DEFERRED SUBMITTAL ITEMS UNTIL THE PLANS FOR SUCH WORK HAVE BEEN REVIEWED AND FOUND ACCEPTABLE BY THE STRUCTURAL ENGINEER OF RECORD AND APPROVED BY THE BUILDING OFFICIAL.

DRAWINGS AND CALCULATIONS FOR THESE ITEMS SHALL BE SIGNED AND SEALED BY A LICENSED MASSACHUSETTS PROFESSIONAL ENGINEER. NO FABRICATION SHALL COMMENCE UNTIL THE FINAL APPROVAL HAS BEEN ISSUED BY THE BUILDING OFFICIAL AND THE STRUCTURAL ENGINEER OF RECORD.

THE DEFERRED SUBMITTALS SHALL INCLUDE AS A MINIMUM, BUT NOT BE LIMITED TO, THE FOLLOWING ITEMS:

SPECIFICATION SECTION	ITEM
013317	STRUCTURAL DESIGNS, SUPPORT AND ANCHORAGE
055200	HANDRAIL SYSTEM
330516	PRECAST MANHOLE TYPE STRUCTURES

GENERAL DESIGN CRITERIA

DESIGN IN ACCORDANCE WITH THE NINTH EDITION OF MASSACHUSETTS BUILDING CODE BASED ON THE 2015 INTERNATIONAL BUILDING CODE (IBC) MODEL CODE.

SNOW LOADS:

GROUND SNOW LOAD (Pg) (PSF): 50
FLAT ROOF SNOW LOAD (Pf) (PSF): 42
SNOW EXPOSURE FACTOR(Ce): 0.9
SNOW IMPORTANCE FACTOR (Is): 1.1
THERMAL FACTOR (Ct) BUILDING ROOF: 1.2

FLOOD LOADS:

BASE FLOOD ELEVATION PER FEMA MAP 25009C0529G: EL 10.00
ZONE: AE
DESIGN FLOOD ELEVATION: EL 19.00

PUMP STATION

DESIGN IN ACCORDANCE WITH THE "CODE REQUIREMENTS FOR ENVIRONMENTAL ENGINEERING CONCRETE STRUCTURES AND COMMENTARY," ACI 350-06 AND "SEISMIC DESIGN OF LIQUID-CONTAINING CONCRETE STRUCTURES AND COMMENTRY,"ACI 350.3-06.

LOADINGS:

FLOOR LIVE LOADS:

TOP SLAB FLOOR UNIFORM (PSF): 100
TOP SLAB (ACCESSIBLE TO TRAFFIC): HS20
HEAVY EQUIPMENT FLOOR UNIFORM (PSF): 300
PLATFORM AND STAIRS UNIFORM (PSF): 100
PLATFORM AND STAIRS CONCENTRATED (LBS): 300

SEISMIC LOADS:

BASIC SEISMIC-FORCE-RESISTING SYSTEM: ORDINARY REINFORCED CONCRETE SHEAR WALLS
RESPONSE MODIFICATION FACTOR FOR IMPULSIVE FORCES,Ri: 3.0
RESPONSE MODIFICATION FACTOR FOR CONVECTIVE FORCES,Rc: 1.0
DESIGN BASE SHEAR (KIPS): 4347 Kips
ANALYSIS PROCEDURE: EQUIVALENT LATERAL FORCE PROCEDURE
OCCUPANCY CATEGORY: III
SPECTRAL RESPONSE ACCELERATION(0.2 SEC)(Ss): 0.233g
SPECTRAL RESPONSE ACCELERATION(1 SEC)(S1): 0.071
SITE CLASS: E
SEISMIC DESIGN CATEGORY: C
SEISMIC IMPORTANCE FACTOR: 1.25
SPECTRAL RESPONSE COEFFICIENT (Sds): 0.388
SPECTRAL RESPONSE COEFFICIENT (Sd1): 0.166

SOIL LOADS:

SATURATED SOIL DENSITY (PCF): 138
DRY SOIL DENSITY(PCF): 125
AT REST EARTH PRESSURE COEFFICIENT: 0.41
ACTIVE EARTH PRESSURE COEFFICIENT: 0.26
PASSIVE EARTH PRESSURE COEFFICIENT: 3.8

ELECTRICAL BUILDING

LOADINGS:

FLOOR LIVE LOADS:

TOP SLAB FLOOR UNIFORM (PSF): 100
PLATFORM AND STAIRS UNIFORM (PSF): 100
PLATFORM AND STAIRS CONCENTRATED (LBS): 300
ELECTRICAL AND STORAGE ROOM (PSF): 250

ROOF LIVE LOADS:

TYPICAL LIGHT ROOF (PSF): 20

SEISMIC LOADS:

BASIC SEISMIC-FORCE-RESISTING SYSTEM: ORDINARY PLAIN MASONRY SHEAR WALLS
RESPONSE MODIFICATION COEFFICIENT, R: 2
DESIGN BASE SHEAR (KIPS): XXX
ANALYSIS PROCEDURE: EQUIVALENT LATERAL FORCE PROCEDURE
OCCUPANCY CATEGORY: III
SPECTRAL RESPONSE ACCELERATION(0.2 SEC)(Ss): 0.233g
SPECTRAL RESPONSE ACCELERATION(1 SEC)(S1): 0.071
SITE CLASS: E
SEISMIC DESIGN CATEGORY: C
SEISMIC IMPORTANCE FACTOR: 1.25
SPECTRAL RESPONSE COEFFICIENT (Sds): 0.388
SPECTRAL RESPONSE COEFFICIENT (Sd1): 0.166

SNOW LOADS:

GROUND SNOW LOAD (Pg) (PSF): 50
FLAT ROOF SNOW LOAD (Pf) (PSF): 42
SNOW EXPOSURE FACTOR(Ce): 0.9
SNOW IMPORTANCE FACTOR (Is): 1.1
THERMAL FACTOR (Ct) BUILDING ROOF: 1.2

WIND LOADS:

INTERNAL PRESSURE COEFFICIENT: ±0.18
COMPONENTS AND CLADDING (PSF):
ZONE 1 : 18.82
ZONE 2 : 26.00
ZONE 3 : 16.43

WALL COMPONENT AND CLADDING (PSF)
ZONE 4: 18.82
ZONE 5: 6.57

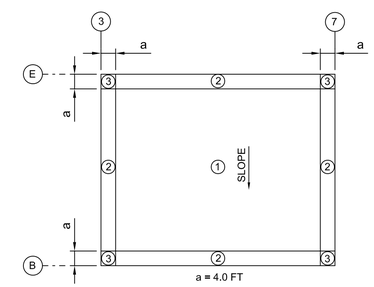

WIND FORCE DIAGRAM ROOF (ZONES)

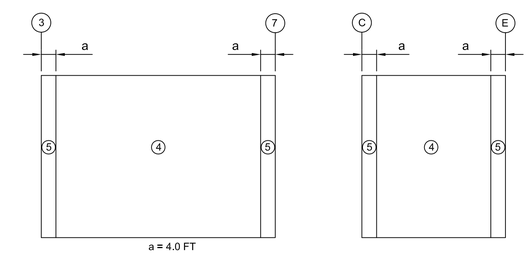

WIND FORCE DIAGRAM WALL (ZONES)

BY: SAKHALKAR, JIDNYASA

PLOT DATE: Tuesday, July 23, 2019

DWG FILE: C:\pwworkdir\ind\0441185\PHASE 3_BSS_SG-01.dwg

REV	DATE	BY	DESCRIPTION

SCALE: NO SCALE

WARNING: 0 ½ 1 — IF THIS BAR DOES NOT MEASURE 1" THEN DRAWING IS NOT TO SCALE

DATE: JULY 31, 2019
DRAWN BY: J SAKHALKAR
DESIGNED BY: J SAKHALKAR
CHECKED BY: -
APPROVED BY: -

60% DESIGN
NOT FOR CONSTRUCTION

This document is an interim document and not suitable for construction. As an interim document, it may contain data that is potentially inaccurate or incomplete and is not to be relied upon without the express written consent of the preparer.

Stantec

LYNN WATER & SEWER COMMISSION

LYNN WATER AND SEWER COMMISSION

PHASE 3 WEST LYNN SEWER SEPARATION

STRUCTURAL GENERAL
LEGEND, NOTES, AND DESIGN CRITERIA - I

SHEET SG-01

195130174

INSPECTION OF CONCRETE CONSTRUCTION

1. SPECIAL INSPECTION FOR CONCRETE CONSTRUCTION WILL BE IN ACCORDANCE WITH 2015 IBC SECTION 1705.3 AND THE FOLLOWING TABLE.

VERIFICATION AND INSPECTION	INSPECTION		REFERENCED STANDARD (A)	IBC REFERENCE
	CONTINUOUS	PERIODIC		
INSPECTION OF REINFORCING STEEL, INCLUDING PRESTRESSING STEEL, AND PLACEMENT.	-	X	ACI 318: 3.5, 7.1 - 7.7	1910.4
INSPECTION OF REINFORCING STEEL WELDING IN ACCORDANCE WITH TABLE 1705.2.2 ITEM 2b.	-	-	AWS D1.4 ACI 318: 3.5.2	-
INSPECTION OF ANCHORS CAST IN CONCRETE WHERE ALLOWABLE LOADS HAVE BEEN INCREASED OR WHERE STRENGTH DESIGN IS USED.	-	X	ACI 318 - 8.1.3, 21.2.8	1908.5, 1909.1
INSPECTION OF ANCHORS POST-INSTALLED IN HARDENED CONCRETE MEMBERS (B).	-	X	ACI 318- 3.8.6, 8.1.3, 21.2.8	1909.1
VERIFYING USE OF REQUIRED DESIGN MIX.	-	X	ACI 318: CH. 4, 5.2 - 5.4	1904.2, 1910.2, 1910.3
AT THE TIME FRESH CONCRETE IS SAMPLED TO FABRICATE SPECIMENS FOR STRENGTH TESTS, PERFORM SLUMP AND AIR CONTENT TESTS, AND DETERMINE THE TEMPERATURE OF THE CONCRETE.	X	-	ASTM C 172 ASTM C 31 ACI 318: 5.6, 5.8	1910.10
INSPECTION OF CONCRETE AND SHOTCRETE PLACEMENT FOR PROPER APPLICATION TECHNIQUES.	X	-	ACI 318: 5.9, 5.10	1910.6, 1910.7, 1910.8
INSPECTION FOR MAINTENANCE OF SPECIFIED CURING TEMPERATURE AND TECHNIQUES.	-	X	ACI 318: 5.11 - 5.13	1910.9
ERECTION OF PRECAST CONCRETE MEMBERS	-	X	ACI 318: CH. 16	-
INSPECTION OF PRESTRESSED CONCRETE:				-
A. APPLICATION OF PRESTRESSING FORCES.	X		ACI 318: 18.20	
B. GROUTING OF BONDED PRESTRESSING TENDONS IN THE SEISMIC FORECE-RESISTING SYSTEM.	X	-	ACI 318: 18.18.4	
VERIFICATION OF IN-SITU CONCRETE STRENGTH PRIOR TO REMOVAL OF SHORES AND FORMS FROM BEAMS AND STRUCTURAL SLABS.	-	X	ACI 318: 6.2	-
INSPECT FORMWORK FOR SHAPE, LOCATION AND DIMENSIONS OF THE CONCRETE MEMBER BEING FORMED.	-	X	ACI 318: 6.1.1	-

(A) WHERE APPLICABLE, SEE ALSO IBC SECTION 1705.12, SPECIAL INSPECTIONS FOR SEISMIC RESISTANCE.

(B) SPECIFIC REQUIREMENTS FOR SPECIAL INSPECTION SHALL BE INCLUDED IN THE RESEARCH REPORT FOR THE ANCHOR ISSUED BY AN APPROVED SOURCE IN ACCORDANCE WITH ACI 355.2 OR OTHER QUALIFICATION PROCEDURES. WHERE SPECIFIC REQUIREMENTS ARE NOT PROVIDED, SPECIAL INSPECTION REQUIREMENTS WILL BE AS SPECIFIED BY THE REGISTERED DESIGN PROFESSIONAL AND WILL BE APPROVED BY THE BUILDING OFFICIAL PRIOR TO COMMENCEMENT OF THE WORK.

INSPECTION OF MASONRY CONSTRUCTION

SPECIAL INSPECTION FOR MASONRY CONSTRUCTION WILL BE PERFORMED AND VERIFIED IN ACCORDANCE WITH TMS 402/ACI 530 AND TMS 602/ACI 530.1 (LEVEL A) QUALITY ASSURANCE PROGRAM REQUIREMENTS. MINIMUM INSPECTION WILL VERIFY COMPLIANCE WITH THE APPROVED SUBMITTALS.

SPECIAL INSPECTION FOR MASONRY CONSTRUCTION WILL BE PERFORMED AND VERIFIED IN ACCORDANCE WITH TMS 402/ACI 530 AND TMS 602/ACI 530.1 (LEVEL B) QUALITY ASSURANCE PROGRAM REQUIREMENTS AND THE FOLLOWING TABLE.

INSPECTION TASK	FREQUENCY (A)		REFERENCE FOR CRITERIA	
	CONTINUOUS	PERIODIC	TMS 402/ACI 530/ ASCE 5	TMS 602/ACI 530.1/ ASCE 6
VERIFY COMPLIANCE WITH THE APPROVED SUBMITTALS	-	X		ART. 1.5
AS MASONRY CONSTRUCTION BEGINS, VERIFY THAT THE FOLLOWING ARE IN COMPLIANCE:				
PROPORTIONS OF SITE-PREPARED MORTAR	-	X		ART. 2.1, 2.6 A
CONSTRUCTION OF MORTAR JOINTS	-	X		ART. 3.3 B
LOCATION OF REINFORCEMENT AND CONNECTORS	-	X		ART. 3.4
PROPERTIES OF THIN-BED MORTAR FOR AAC MASONRY	X (B)	-		ART. 2.1C
PRIOR TO GROUTING THE FOLLOWING SHALL BE VERIFIED TO ENSURE COMPLIANCE:				
GROUT SPACE	-	X		ART. 3.2 D, 3.2 F
GRADE, TYPE, AND SIZE OF REINFORCEMENT AND ANCHOR BOLTS	-	X	Sect 6.1	ART. 2.4, 3.4
PLACEMENT OF REINFORCEMENT, CONNECTIONS, AND ANCHORAGES	-	X	Sect 6.1, 6.2.1, 6.2.6, 6.2.7	ART. 3.2 E, 3.4
PROPORTIONS OF SITE-PREPARED GROUT	-	X		ART. 2.6 B
CONSTRUCTION OF MORTAR JOINTS	-	X		ART. 3.3 B
VERIFY DURING CONSTRUCTION:				
SIZE AND LOCATION OF STRUCTURAL ELEMENTS	-	X		ART. 3.3 F
TYPE, SIZE AND LOCATION OF ANCHORS, INCLUDING OTHER DETAILS OF ANCHORAGE OF MASONRY TO STRUCTURAL MEMBERS, FRAMES OR OTHER CONSTRUCTION	-	X	Sect 1.2.1(e), 6.1.4.3, 6.2.1	
WELDING OF REINFORCEMENT	X	-	Sect 8.1.6.7.2, 9.3.3.4(c), 11.3.3.4(b)	
PREPARATION, CONSTRUCTION, AND PROTECTION OF MASONRY DURING COLD WEATHER (TEMP BELOW 40° F) OR HOT WEATHER (TEMP ABOVE 90 ° F)	-	X		ART. 1.8C, 1.8D
PLACEMENT OF AAC MASONRY UNITS AND CONSTRUCTION OF THIN-BED MORTAR JOINTS	X (B)	-		ART. 3.3 B.9, 3.3 F.1.b
OBSERVE PREPARATION OF GROUT SPECIMENS, MORTAR SPECIMENS, AND/OR PRISMS	-	X		ART. 1.4 B.2.a.3, 1.4 B.2.b.3, 1.4 B.2.c.3, 1.4 B.3, 1.4 B.4

(A) FREQUENCY REFERS TO THE FREQUENCY OF INSPECTION, WHICH MAY BE CONTINUOUS DURING THE TASK LISTED OR PERIODICALLY DURING THE LISTED TASK, AS DEFINED IN THE TABLE.

(B) REQUIRED FOR THE FIRST 5000 SQUARE FEET OF AAC MASONRY.

INSPECTION OF WELDING

AS A MINIMUM WELDING INSPECTION TASKS SHALL BE IN ACCORDANCE WITH TABLES N5.4-1, N5.4-2 AND N5.4-3. INSPECTION TASKS ARE AS FOLLOWS:

O- OBSERVE THESE ITEMS ON A RANDOM BASIS. OPERATIONS NEED NOT BE DELAYED PENDING THESE INSPECTIONS.

P- PERFORM THESE TASKS FOR EACH WELDED JOINT OR MEMBER.

INSPECTION TASKS PRIOR TO WELDING (AISC 360 TABLE N5.4-1)

INSPECTION TASK PRIOR TO WELDING	INSPECTION		AWS D1.1/D1.1M REFERENCES
	QUALITY CONTROL	QUALITY ASSURANCE	
WELDING PROCEDURE SPECIFICATIONS (WPSs) AVAILABLE	P	P	6.3
MANUFACTURER CERTIFICATIONS FOR WELDING CONSUMABLES AVAILABLE	P	P	6.2
MATERIAL IDENTIFICATION (TYPE/GRADE)	O	O	6.2
WELDER IDENTIFICATION SYSTEM (1)	O	O	6.4
FIT-UP GROOVE WELDS (INCLUDING JOINT GEOMETRY) -JOINT PREPARATION -DIMENSIONS (ALIGNMENT, ROOT OPENING, ROOT FACE, BEVEL) -CLEANLINESS (CONDITION OF SURFACES) -TACKING (QUALITY AND LOCATION) -BACKING TYPE AND FIT (IF APPLICABLE)	O	O	6.5.2 5.22 5.15 5.18 5.10, 5.22.1.1
CONFIGURATION AND FINISH OF ACCESS HOLES	O	O	6.5.2, 5.17, AISC J1.6
FIT-UP OF FILLET WELDS -DIMENSIONS (ALIGNMENT, GAPS AT ROOT) -CLEANLINESS (CONDITION OF SURFACES) -TACKING (QUALITY AND LOCATION)	O	O	5.22.1 5.15 5.18
CHECK WELDING EQUIPMENT	O	-	6.2, 5.11
THE FABRICATOR OR ERECTOR, AS APPLICABLE, SHALL MAINTAIN A SYSTEM BY WHICH A WELDER WHO HAS WELDED A JOINT OR MEMBER CAN BE IDENTIFIED. STAMPS, IF USED, SHALL BE THE LOW-STRESS TYPE.			

INSPECTION TASKS DURING WELDING (AISC 360 TABLE N5.4-2)

INSPECTION TASK DURING WELDING	INSPECTION		AWS D1.1/D1.1M REFERENCES
	QUALITY CONTROL	QUALITY ASSURANCE	
USE OF QUALIFIED WELDERS	O	O	6.4
CONTROL AND HANDLING OF WELDING CONSUMABLES -PACKAGING -EXPOSURE CONTROL	O	O	6.2 5.3.1 5.3.2 (FOR SMAW), 5.3.3 (FOR SAW)
NO WELDING OVER CRACKED TACK WELDS	O	O	5.18
ENVIRONMENTAL CONDITIONS -WIND SPEED WITHIN LIMITS -PRECIPITATION AND TEMP	O	O	5.12.1 5.12.2
WPS FOLLOWED: -SETTINGS ON WELDING EQUIP. -TRAVEL SPEED -SELECTED WELDING MATERIALS -SHIELDED GAS TYPE/FLOW RATE -PREHEAT APPLIED -INTERPASS TEMPERATURE (MIN/MAX) -PROPER POSITION (F, V, H, OH)	O	O	6.3.3, 6.5.2, 5.5, 5.21 5.6, 5.7
WELDING TECHNIQUES -INTERPASS AND FINAL CLEANING -EACH PASS WITHIN PROFILE LIMITATIONS -EACH PASS MEETS QUALITY REQUIREMENTS	O	O	6.5.2, 6.5.3, 5.24 5.30.1

INSPECTION TASKS AFTER WELDING (AISC 360 TABLE N5.4-3)

INSPECTION TASKS AFTER WELDING	INSPECTION		AWS D1.1/D1.1M REFERENCES
	QUALITY CONTROL	QUALITY ASSURANCE	
WELDS CLEANED	O	O	5.30.1
SIZE, LENGTH AND LOCATION OF WELDS	P	P	6.5.1
WELDS MEET VISUAL ACCEPTANCE CRITERIA -CRACK PROHIBITION -WELD/BASE METAL FUSION -CRATER CROSS SECTION -WELD PROFILES -WELD SIZE -UNDERCUT -POROSITY	P	P	6.5.3 TABLE 6.1(1) TABLE 6.1(2) TABLE 6.1(3) TABLE 6.1(4), 5.24 TABLE 6.1(6) TABLE 6.1(7) TABLE 6.1(8)
ARC STRIKES	P	P	5.29
K-AREA (1)	P	P	-
BACKING REMOVED AND WELD TABS REMOVED (IF REQUIRED)	P	P	5.10, 5.31
REPAIR ACTIVITIES	P	P	6.5.3, 5.26
DOCUMENT ACCEPTANCE OR REJECTION OF WELDED JOINT OR MEMBER	P	P	6.5.4, 6.5.5
WHEN WELDING OF DOUBLER PLATES, CONTINUITY PLATES OR STIFFENERS HAS BEEN PREFORMED IN THE K-AREA, VISUALLY INPSECT THE WED K-AREA FOR CRACKS WITHIN 3 INCHES OF THE WELD.			

INSPECTION OF SOILS

1. SPECIAL INSPECTION FOR SOIL WILL BE IN ACCORDANCE WITH IBC SECTION 1705.6 AND THE FOLLOWING TABLE.

VERIFICATION AND INSPECTION	INSPECTION	
	CONTINUOUS	PERIODIC
VERIFY MATERIALS BELOW FOOTINGS AND SHALLOW FOUNDATIONS ARE ADEQUATE TO ACHIEVE THE DESIGN BEARING CAPACITY.	-	X
VERIFY EXCAVATIONS ARE EXTENDED TO PROPER DEPTH AND HAVE REACHED PROPER MATERIAL.	-	X
PERFORM CLASSIFICATION AND TESTING OF CONTROLLED FILL MATERIALS.	-	X
VERIFY USE OF PROPER MATERIALS, DENSITIES AND LIFT THICKNESSES DURING PLACEMENT AND COMPACTION OF CONTROLLED FILL.	X	-
PRIOR TO PLACEMENT OF CONTROLLED FILL, OBSERVE SUBGRADE AND VERIFY THAT SITE HAS BEEN PREPARED PROPERLY.	-	X

INSPECTION OF CAST-IN-PLACE DEEP FOUNDATION

1. SPECIAL INSPECTION FOR CAST-IN-PLACE DEEP FOUNDATIONS WILL BE IN ACCORDANCE WITH IBC SECTION 1705.8 AND THE FOLLOWING TABLE.

VERIFICATION AND INSPECTION	INSPECTION	
	CONTINUOUS	PERIODIC
OBSERVE DRIVING OPERATIONS AND MAINTAIN COMPLETE AND ACCURATE RECORDS FOR EACH ELEMENT.	X	-
VERIFY PLACEMENT LOCATIONS AND PLUMBNESS, CONFIRM ELEMENT DIAMETERS, RECORD GROUT AND CONCRETE VOLUMES, RECORD TIP ELEVATIONS, AND DOCUMENT ANY DAMAGE TO FOUNDATION ELEMENTS.	X	-
FOR CONCRETE ELEMENTS AND CONCRETE-FILLED ELEMENTS, PERFORM ADDITIONAL INSPECTIONS IN ACCORDANCE WITH SECTION 1705.3.	-	-

STRUCTURAL OBSERVATIONS:

1. STRUCTURAL OBSERVATIONS SHALL BE PROVIDED IN ACCORDANCE WITH THE 2012 IBC. THE OWNER SHALL EMPLOY THE ENGINEER OF RECORD, HIS/HER DESIGNEE, OR A[N] [OREGON] REGISTERED DESIGN PROFESSIONAL TO PERFORM STRUCTURAL OBSERVATIONS, AND WHO SHALL PROVIDE ALL SERVICES NECESSARY TO MEET THE IBC STRUCTURAL OBSERVATIONS REQUIREMENTS.
2. STRUCTURAL OBSERVATIONS SHALL BE PROVIDED DURING ALL FABRICATION AND CONSTRUCTION ACTIVITIES IN ACCORDANCE WITH THE NOTES AND SCHEDULES ON THIS DRAWING.
3. THE CONTRACTOR SHALL NOTIFY THE OWNER AND THE STRUCTURAL OBSERVER AT LEAST 3 BUSINESS DAYS PRIOR TO EACH REQUIRED STRUCTURAL OBSERVATION.

SCHEDULE OF STRUCTURAL OBSERVATIONS

WHEN TO OBSERVE	WHAT TO OBSERVE
FOUNDATIONS	
PRIOR TO THE FIRST CONCRETE POUR, BUT AFTER PLACEMENT OF REINFORCING IS UNDERWAY	REVIEW AREAS OF PARTICULAR CONCERN SUCH AS HIGHLY CONGESTED AREAS OR ANY MECHANICALLY-COUPLED SPLICES AND CHECK THAT APPROVED PLACING PLANS ARE BEING USED.
	REVIEW ANCHOR BOLT PLACEMENT AND PLACEMENT OF HOLD-DOWN BOLTS OR STEEL EMBEDS.
	REVIEW INSTALLATION OF WALL DOWELS.
STEEL FRAMING	
AFTER THE FIRST TIER HAS BEEN ERECTED AND PLUMBED, AND BOLT TIGHTENING AND JOINT WELDING IS UNDERWAY.	OBSERVE THE WORK IN PROGRESS, MEET WITH SPECIAL INSPECTORS FOR THE WELDING AND BOLT TIGHTENING OPERATIONS, PAY PARTICULAR ATTENTION TO THE PROCEDURES USED FOR WELDING OF MOMENT FRAME JOINTS.
AFTER ONE LEVEL OF STEEL DECK IS IN PLACE AND WELDING OF SHEAR STUDS IS UNDER WAY.	CHECK THAT THE WELDING PROCEDURES HAVE BEEN QUALIFIED BY THE INSPECTOR.
CONCRETE CONSTRUCTION	
PRIOR TO THE FIRST CONCRETE POUR, BUT AFTER PLACEMENT OF REINFORCING IS WELL UNDERWAY.	REVIEW AREAS OF PARTICULAR CONCERN SUCH AS HIGHLY CONGESTED AREAS OR ANY MECHANICALLY-COUPLED SPLICES AND CHECK THAT APPROVED PLACING PLANS ARE BEING USED.
	REVIEW ANCHOR BOLT PLACEMENT AND PLACEMENT OF HOLD-DOWN BOLTS OR STEEL EMBEDS.
DURING PLACEMENT OF SLAB/BEAM/JOIST REINFORCEMENT OR PORT-TENSIONSING TENDONS.	THE ENGINEER MAY ELECT TO PERSONALLY OBSERVE CONCRETE PLACEMENT FOR CRITICAL STRUCTURAL ELEMENTS.
MASONRY CONSTRUCTION	
PRIOR TO THE FIRST GROUT LIFT, BUT AFTER PLACEMENT OF REINFORCING IS WELL UNDERWAY.	REVIEW AREAS OF PARTICULAR CONCERN SUCH AS HIGHLY CONGESTED AREAS OR ANY MECHANICALLY-COUPLED SPLICES AND CHECK THAT APPROVED PLACING PLANS ARE BEING USED.
	REVIEW ANCHOR BOLT PLACEMENT AND PLACEMENT OF HOLD-DOWN BOLTS OR STEEL EMBEDS.

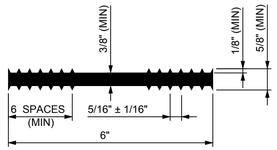

6" FLATSTRIP WATERSTOP

REV 110112 — S-105

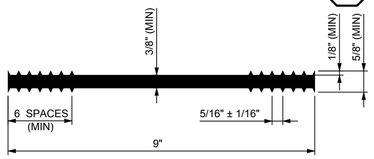

9" FLATSTRIP WATERSTOP

REV 110112 — S-106

NOTE:

FOR ELEVATED SLABS WITH WATER ON BOTH SIDES, LOCATE WATERSTOP ABOVE SLIP DOWEL.

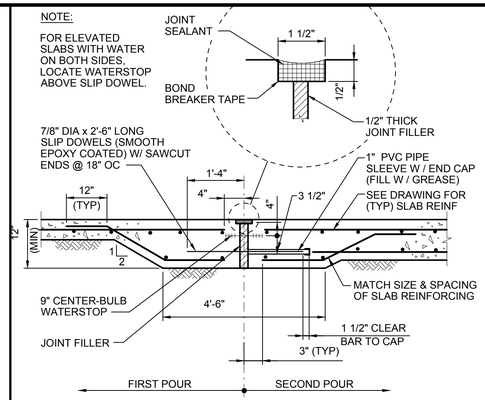

SLAB-ON-GRADE EXPANSION JOINT

REV 110112 — S-109

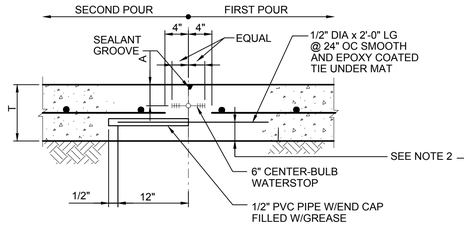

SINGLE MAT REINF - SLEEVE - TYPE JOINT
(TYP CONSTRUCTION JOINT UNLESS OTHERWISE NOTED)

WITH WATERSTOP AND SEALANT GROOVE

S-110

NO WATERSTOP OR SEALANT GROOVE

S-111

T	A
6"	2"
7"	2 1/2"
8"	2 1/2"

NOTES:

1. WATERSTOPS AND SEALANT GROOVES TO BE PROVIDED IN ALL WATER RETAINING SLABS, SEE DRAWINGS, FOR OTHER LOCATIONS WHERE THEY MAY BE REQUIRED.

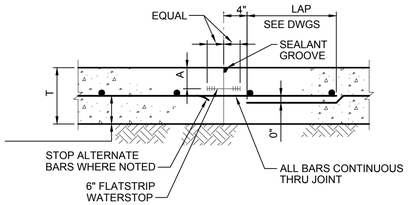

SINGLE MAT REINF - CONTINUOUS THRU JOINT
(ONLY WHEN SPECIFIED ON DRAWINGS)

WITH WATERSTOP AND SEALANT GROOVE

S-112

NO WATERSTOP OR SEALANT GROOVE

S-113

2. DIMENSIONS INDICATED ON DETAIL CONTROL MINIMUM COVER. FOR THIN SLABS, THE BOTTOM COVER MAY BE LESS THAN 3".
3. STAGGER SPLICES UNLESS NOTED OTHERWISE.

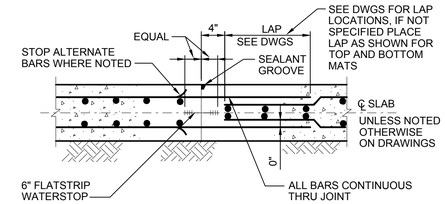

DOUBLE MAT REINF

WITH WATERSTOP AND SEALANT GROOVE

S-114

NO WATERSTOP OR SEALANT GROOVE

S-115

SLAB-ON-GRADE CONSTRUCTION JOINTS

REV 110112

NOTE:

1. FOR ELEVATED SLABS WITH WATER ON BOTH SIDES, LOCATE WATER STOP ABOVE SLIP DOWEL.

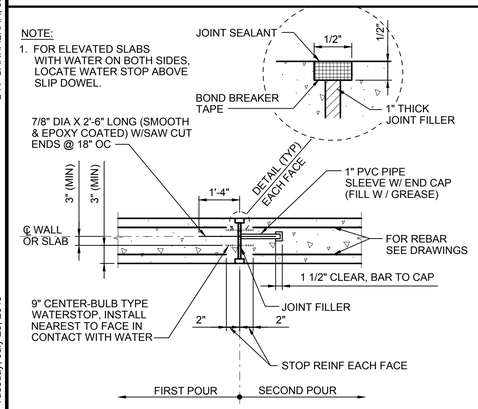

EXPANSION JOINT

REV 110112 — S-116

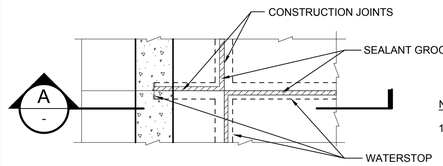

PLAN

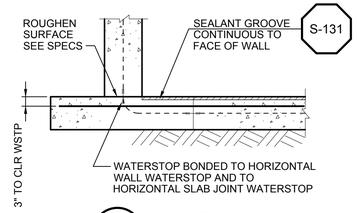

A - SECTION

NOTES:

1. SEALANT GROOVE SHALL BE CONTINUED UNDER WALL AND SEALANT SHALL BOND WITH WALL WATERSTOP IN ALL CASES WHERE SUCH WATERSTOP OCCURS.
2. SEALANT UNDER WALL SHALL BE IN PLACE AND FULLY CURED PRIOR TO PLACEMENT OF CONCRETE FOR WALL.
3. CONSTRUCTION JOINTS PASSING THROUGH VARIOUS MEMBERS OF A WATER RETAINING STRUCTURE SHALL BE SEALED WITH WATERSTOPS BONDED TOGETHER, SO AS TO PROVIDE A CONTINUOUS WATERTIGHT JOINT.

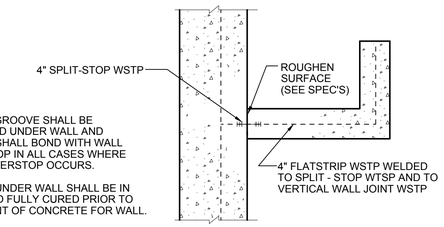

LAUNDER JOINT

CONSTRUCTION JOINT WALL TO SLAB

REV 110112 — S-118

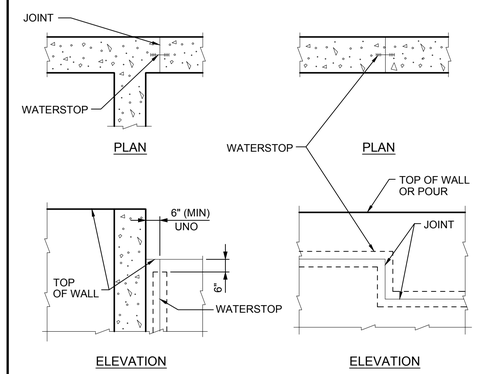

WATERSTOP DETAILS FOR WALL JOINTS

REV 110112 — S-120

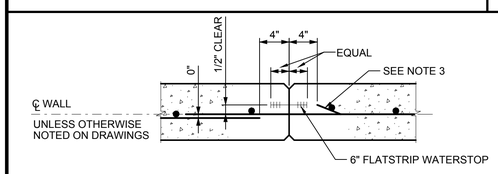

SINGLE CURTAIN REINF

WITH WATERSTOP

S-121

NO WATERSTOP

S-122

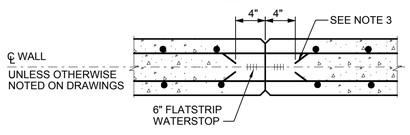

DOUBLE CURTAIN REINF

WITH WATERSTOP

S-123

NO WATERSTOP

S-124

NOTES:

1. WHERE WATERSTOP IS REQUIRED IN SINGLE CURTAIN WALL REINFORCEMENT, PLACE WATERSTOP ON WATER SIDE OF WALL.
2. UNLESS OTHERWISE NOTED 3/4" CHAMFERS SHALL BE OMITTED IN SURFACES TO RECEIVE ARCHITECTURAL TREATMENT.
3. UNLESS SPECIFICALLY NOTED OTHERWISE #5 AND LARGER BARS SHALL BE CONTINUOUS THRU JOINT. #4 AND SMALLER BARS SHALL STOP ALTERNATE BARS AT JOINT.
4. STAGGER SPLICES UNLESS NOTED OTHERWISE.

VERTICAL WALL CONSTRUCTION JOINT

REV 121613

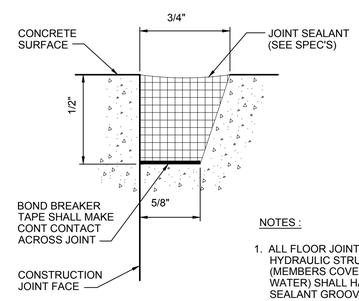

NOTES :

1. ALL FLOOR JOINTS OF HYDRAULIC STRUCTURES (MEMBERS COVERED WITH WATER) SHALL HAVE A SEALANT GROOVE
2. SANDBLASTING REQUIRED PRIOR TO APPLICATION OF PRIMER

SEALANT GROOVE

REV 110112 — S-131

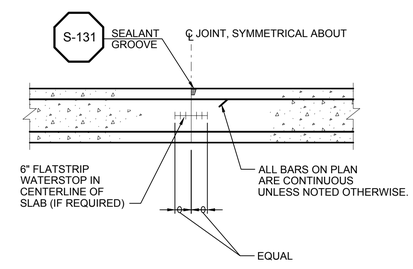

SUSPENDED SLAB CONSTRUCTION JOINT

REV 110112 — S-137

REV	DATE	BY	DESCRIPTION

SCALE: NO SCALE

WARNING: 0 ½ 1 — IF THIS BAR DOES NOT MEASURE 1" THEN DRAWING IS NOT TO SCALE

DATE	JULY 31, 2019
DRAWN BY	J SAKHALKAR
DESIGNED BY	J SAKHALKAR
CHECKED BY	-
APPROVED BY	-

60% DESIGN
NOT FOR CONSTRUCTION

This document is an interim document and not suitable for construction. As an interim document, it may contain data that is potentially inaccurate or incomplete and is not to be relied upon without the express written consent of the preparer.

Stantec

LYNN WATER & SEWER COMMISSION

LYNN WATER AND SEWER COMMISSION

PHASE 3 WEST LYNN SEWER SEPARATION

STRUCTURAL GENERAL
STANDARD DETAILS - I

SHEET SG-04

195130174

DWG FILE: C:\pwworkdir\d0441185\PHASE 3_BSS_SG-04.dwg

PLOT DATE: Tuesday, July 23, 2019

BY: SAKHALKAR, JIDNYASA

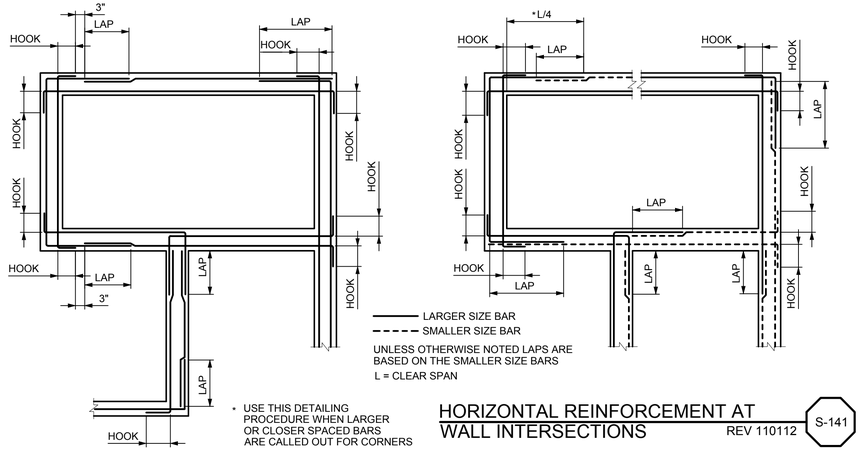

HORIZONTAL REINFORCEMENT AT WALL INTERSECTIONS

REV 110112 — S-141

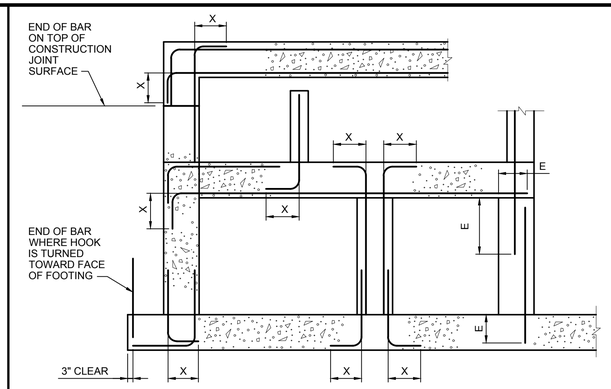

SECTION

LENGTH (*)			
BAR SIZE	HOOK X	LAP	EMBEDMENT E
#3	6"	16" (21")	12" (16")
#4	8"	16" (21")	12" (16")
#5	10"	20" (26")	15" (20")
#6	12"	28" (37")	22" (28")
#7	14"	48" (62")	37" (48")
#8	16"	62" (81")	48" (62")
#9	19"	79" (102")	61" (79")
#10	22"	100" (130")	77" (100")
#11	24"	123" (160")	95" (123")

* USE LENGTH IN PARENTHESIS FOR WALL HORIZONTAL REBARS AND SLAB BARS WITH 12" OR MORE OF FRESH CONCRETE UNDERNEATH

NOTES:

1. USE LAP LENGTHS AS DETERMINED FROM THESE TABLES UNLESS SHOWN OTHERWISE.
2. THE TABLES SHOWN ARE FOR f'c=4000psi, fy=60,000psi, 1.5" MIN CONCRETE COVER AND 3" MIN BAR SPACING.
3. MULTIPLY THE LAP AND E SHOWN IN THESE TABLES BY 1.5 FOR EPOXY COATED REINFORCING.
4. WHEN BARS OF DIFFERENT SIZES ARE LAP SPLICED, LAP LENGTH SHALL BE THE LARGER OF:

   EMBEDMENT LENGTH OF LARGER BAR
   LAP LENGTH OF SMALLER BAR
5. USE REINFORCING BAR COUPLERS FOR SPLICES OF #11 AND LARGER BARS UNLESS DRAWINGS INDICATE LAP SPLICES SHOWN IN TABLE ARE ACCEPTABLE.
6. ALL DOWEL BARS SHALL EXTEND AN EMBEDMENT LENGTH E INTO ANOTHER MEMBER OR ACROSS A CONSTRUCTION JOINT UNLESS SHOWN TO SPLICE WITH OTHER BARS OR TO EXTEND TO THE FAR FACE OF THE MEMBER AND END WITH A STANDARD HOOK.

STANDARD 90° BAR HOOKS, EMBEDMENT LENGTHS AND LAP LENGTHS

REV 090616 — S-143

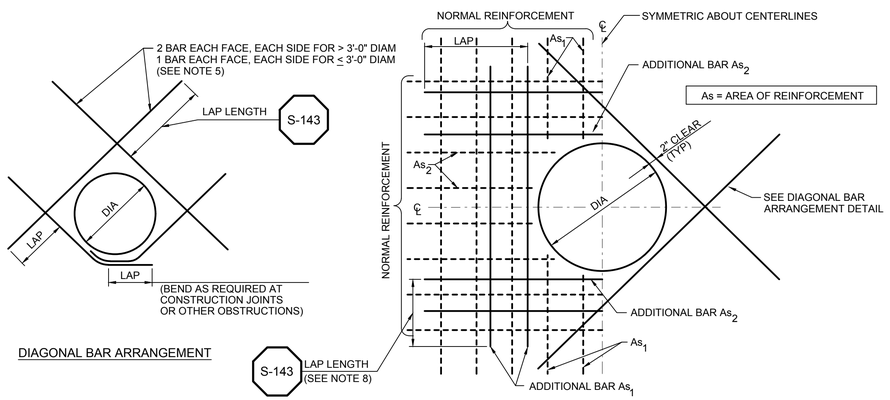

DIAGONAL BAR ARRANGEMENT

NOTES:

1. THIS DETAIL TO BE USED AT ALL CIRCULAR OPENINGS EXCEPT WHEN OTHER DETAILING IS INDICATED ON THE DRAWINGS.
2. CUT NORMAL REINFORCEMENT 2" CLEAR OF OPENING.
3. CUT NORMAL REINFORCEMENT AT OPENINGS:
   A. AS_1 AND AS_2= 1/2 AREA OF TOTAL CUT BARS TO BE ADDED ON EACH SIDE OF OPENING.
4. DIAGONAL AND ADDITIONAL BARS AS_1 AND AS_2 TO BE PLACED.
   A. AT CENTERLINE OF WALLS OR SLABS WHERE ONE LAYER OF REINFORCEMENT IS PROVIDED.
   B. AT EACH FACE OF WALLS OR SLABS WHERE TWO LAYERS OF REINFORCEMENT ARE PROVIDED.
5. UNLESS OTHERWISE NOTED, SIZE OF DIAGONAL BARS SHALL BE THE SIZE OF THE LARGEST NORMAL REINFORCING BAR CUT.
6. INCREASE SIZE OF ADDITIONAL BARS AS NEEDED TO FIT WITHIN A DISTANCE OF 2X WALL/ SLAB THICKNESS FROM OPENING, PROVIDE 2" MIN CLEAR BETWEEN BARS.
7. WHERE A SLAB OR INTERSECTING WALL CONNECTS WITHIN ONE WALL THICKNESS OF THE OPENING, ADDITIONAL BARS ON THAT SIDE OF THE OPENING MAY BE OMITTED.
8. WHEN THE LAP LENGTH OF THE ADDITIONAL BARS CANNOT BE ACHIEVED DUE TO AN ADJACENT WALL OR SLAB, ADDITIONAL CORNER BARS OR SLAB DOWELS, REPECTIVELY, MATCHING THE CUT BARS, ARE TO BE INCLUDED IN THE ADJACENT WALL OR SLAB TO LAP WITH THE ADDITIONAL BARS.

ADDITIONAL REINFORCEMENT AT CIRCULAR OPENINGS

S-144

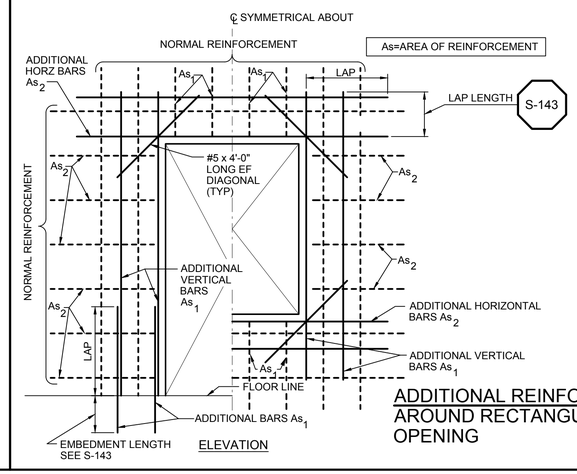

ELEVATION

NOTES:

1. CUT NORMAL REINFORCEMENT AT OPENING: As_1 AND As_2 = 1/2 AREA OF CUT BARS TO BE ADDED ON EACH SIDE OF OPENING.
2. DIAGONAL AND ADDITIONAL BARS As_1 AND As_2 TO BE PLACED:
   A) AT CENTERLINE OF WALLS OR SLABS WHERE ONE LAYER OF REINFORCEMENT IS PROVIDED.
   B) AT EACH FACE OF WALLS OR SLABS WHERE TWO LAYERS OF REINFORCEMENT ARE PROVIDED.
3. INCREASE SIZE OF ADDITIONAL BARS AS NEEDED TO FIT WITHIN A DISTANCE OF 2 X WALL / SLAB THICKNESS FROM OPENING. PROVIDE 2" MIN CLEAR BETWEEN BARS.
4. THIS DETAIL TO BE USED ONLY WHEN NO OTHER DETAIL IS INDICATED ON THE DRAWINGS.
5. WHERE A SLAB OR INTERSECTING WALL CONNECTS WITHIN ONE WALL THICKNESS OF THE OPENINGS, ADDITIONAL BARS ON THAT SIDE MAY BE OMITTED.
6. THIS DETAIL APPLIES TO BELOW GRADE OPENINGS AND WHEN SPECIFICALLY REFERENCED. REFER TO DETAIL S-147 FOR ABOVE GRADE OPENINGS.

ADDITIONAL REINFORCEMENT AROUND RECTANGULAR OPENING

S-148

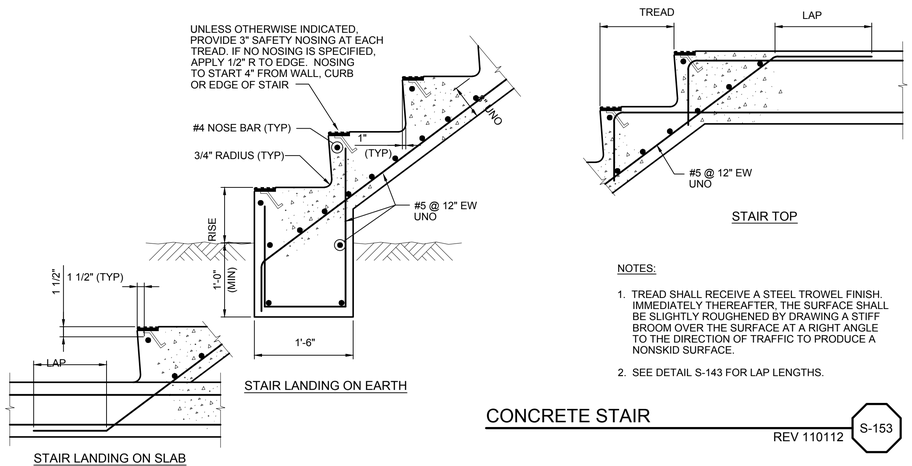

STAIR LANDING ON EARTH

STAIR LANDING ON SLAB

STAIR TOP

NOTES:

1. TREAD SHALL RECEIVE A STEEL TROWEL FINISH. IMMEDIATELY THEREAFTER, THE SURFACE SHALL BE SLIGHTLY ROUGHENED BY DRAWING A STIFF BROOM OVER THE SURFACE AT A RIGHT ANGLE TO THE DIRECTION OF TRAFFIC TO PRODUCE A NONSKID SURFACE.
2. SEE DETAIL S-143 FOR LAP LENGTHS.

CONCRETE STAIR

REV 110112 — S-153

REV	DATE	BY	DESCRIPTION

SCALE: NO SCALE

WARNING: 0 ½ 1 — IF THIS BAR DOES NOT MEASURE 1" THEN DRAWING IS NOT TO SCALE

DATE: JULY 31, 2019
DRAWN BY: J SAKHALKAR
DESIGNED BY: J SAKHALKAR
CHECKED BY: -
APPROVED BY: -

60% DESIGN NOT FOR CONSTRUCTION

This document is an interim document and not suitable for construction. As an interim document, it may contain data that is potentially inaccurate or incomplete and is not to be relied upon without the express written consent of the preparer.

Stantec

LYNN WATER & SEWER COMMISSION

LYNN WATER AND SEWER COMMISSION

PHASE 3 WEST LYNN SEWER SEPARATION

STRUCTURAL GENERAL STANDARD DETAILS - II

SHEET SG-05

195130174

DWG FILE: C:\pwworkdir\d0441185\PHASE 3_BSS_SG-05.dwg
PLOT DATE: Tuesday, July 23, 2019
BY: SAKHALKAR, JIDNYASA

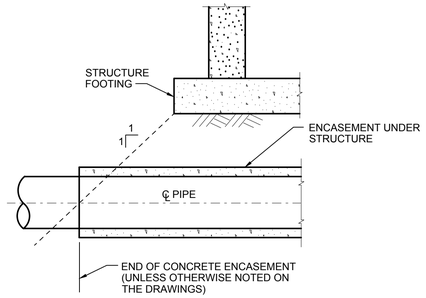

END OF ENCASEMENT BEYOND STRUCTURE

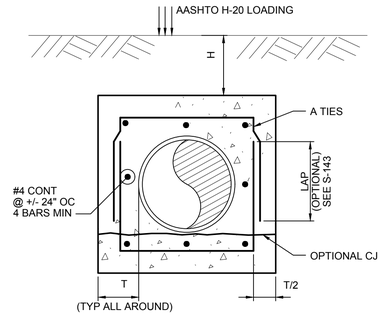

T= 6" OR 8" ENCASEMENT

NOTES:

1. ALL PIPE BURIED BENEATH STRUCTURES SHALL BE CONCRETE ENCASED.
2. WHERE ENCASEMENT PASSES UNDER SPREAD FOOTING OR MAT FOUNDATION, USE H=20' UNO

COVER H	PIPE OUTSIDE DIAMETER									
	8"-24"		30"-32"		36"		42"-54"		60"-72"	
	A	T	A	T	A	T	A	T	A	T
2' MIN	#4@12"	6"	#4@12"	6"	#4@9"	6"	#5@12"	8"	#4@9"	12"
3'					#4@12"		#4@9"		#5@12"	8"
4'							#4@12"		#5@10"	
5'							#4@12"		#5@10"	
6'							#4@9"		#5@10"	
7'					#4@12"		#4@9"		#6@12"	
8'			#4@12"		#4@9"		#5@12"		#6@10"	8"
9'			#4@9"	6"	#4@9"	6"	#5@10"		#4@9"	12"
10'		6"	#4@12"	8"	#4@9"	8"	#5@10"	8"	#5@12"	
12'		8"		12"	#4@12"	12"	#4@9"	12"	#5@10"	
14'		12"			#4@12"		#4@9"		#6@12"	
16'					#4@12"		#5@12"		#6@10"	12"
18'			#4@12"		#4@9"	12"	#5@10"	12"	#6@10"	14"
20'	#4@12"	12"	#4@9"	12"	#4@9"	14"	#6@12"	14"	#6@10"	16"

NOTES:

3. ALL ENCASEMENTS UNDER STRUCTURES SHALL BE SEPARATED FROM THE STRUCTURE FOUNDATIONS BY BACKFILL OR 2 LAYERS OF 40# FELT UNO
4. WHEN ENCASEMENTS TERMINATE @ STRUCTURE, ENCASEMENT REINFORCING SHALL BE DOWELED INTO THE STRUCTURE
5. CONTINUE ENCASEMENT ALONG VERTICAL RUNS OF PIPE, UNO FOR T = 12" TO 16" ENCASEMENTS, PROVIDE 2 MATS OF REINF ON ALL FOUR SIDES OF ENCASEMENT. EXTEND VERT REINF FULL DEPTH INTO HORIZ ENCASEMENT AND TERMINATE BARS WITH STD HOOKS.

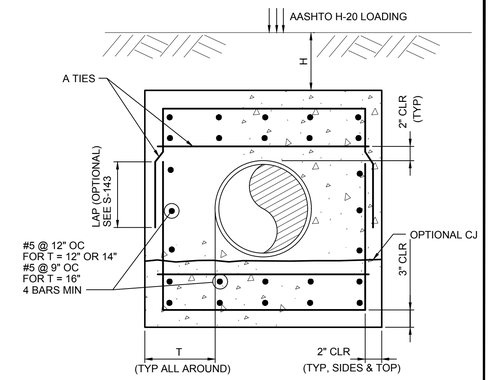

T= 12" - 16" ENCASEMENT

PIPE ENCASEMENT

S-171

ANCHOR BOLT DIAMETER (INCHES)	MINIMUM EMBEDMENT	
	TOP OF COLUMNS	OTHER APPLICATIONS
1/4	5	3
3/8	5	3
1/2	6	4
5/8	6	4.5
3/4	7	5
7/8	8	6
1	9	7
1 1/8	10	8
1 1/4	11	9

NOTES:

1. USE ONLY HEADED ANCHORS, J-BOLTS ARE NOT ALLOWED
2. THIS DETAIL APPLIES TO BOTH CONCRETE AND MASONRY
3. IN MASONRY PROVIDE A 1" ANNULAR SPACE IN BLOCK SHELL AROUND ANCHOR. GROUT TO SURFACE
4. FOR ADHESIVE ANCHORS USE THE TOP OF COLUMN EMBEDMENTS UNLESS THE MANUFACTURER'S LITERATURE CALLS OUT LONGER LENGTHS

ANCHOR BOLT EMBEDMENT

REV 110112

S-175

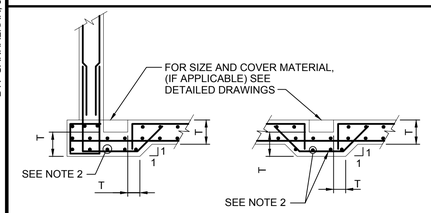

TYPE A

(USE WHERE TYP BOTTOM REINF CAN CONTINUE BELOW SUMP/TRENCH W/ REQUIRED CONC COVER)

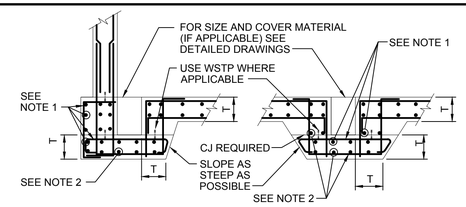

TYPE C

(USE WHERE SUMP/TRENCH DEPTH IS GREATER THAN OR EQUAL TO T)

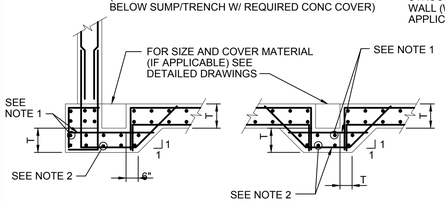

TYPE B

(USE WHERE SUMP/TRENCH IS LESS THAN T AND TYP BOTTOM REINF CANNOT CONTINUE BELOW SUMP/TRENCH W/ REQUIRED CONC COVER)

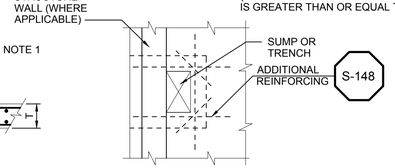

S-148

NOTES:

1. MATCH TOP BAR SIZE AND SPACING
2. MATCH BOTTOM BAR SIZE AND SPACING

REINFORCING AT SUMPS AND TRENCHES

REV 020519

S-177

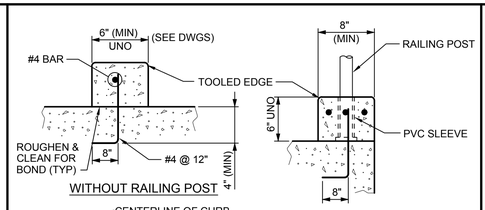

WITHOUT RAILING POST

WITH RAILING POST

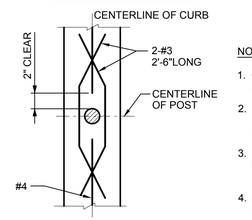

NOTES:

1. CURBS SHALL BE OF EQUAL WIDTH IN THEIR ENTIRE LENGTH.
2. DETAIL ALSO APPLIES TO TOPS OF WALLS REINFORCED WITH ONE CURTAIN OF STEEL.
3. POST INSERTS NOT ALLOWED IN APPLICATIONS SUBJECT TO FREEZING.
4. IN EXISTING SLABS USE #4 @ 12" W/ 4" EMBED, DRILL AND GROUT INTO SLAB

CONCRETE CURB

REV 110112

S-180

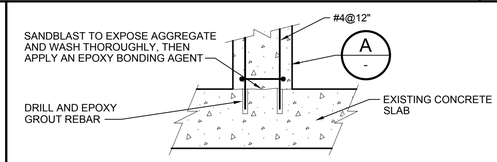

PIER OVER EXISTING SLAB

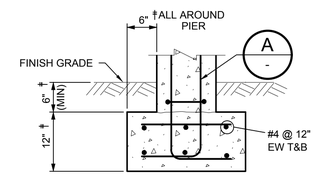

PIER ON GRADE

† USE THESE DIMENSIONS UNLESS OTHERWISE NOTED ON DRAWINGS

* SEE MECHANICAL DRAWINGS

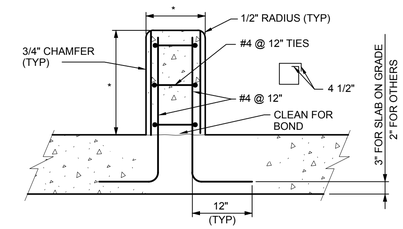

PIER OVER NEW SLAB

A - SECTION

CONCRETE PIER FOR PIPE SUPPORT

REV 110112

S-181

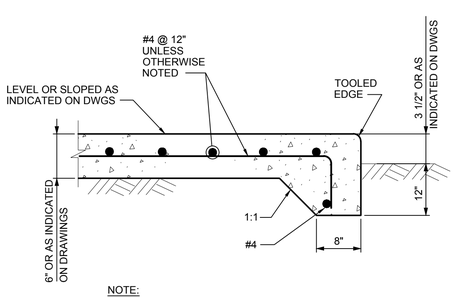

NOTE:

USE 2 MATS OF #5 @ 12" EW EF FOR SLABS 10" AND THICKER

SLAB-ON-GRADE

REV 110112

S-190

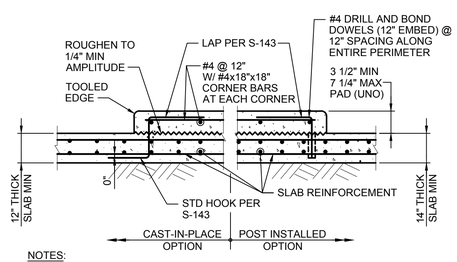

NOTES:

1. WHERE SLAB THICKNESS IS LESS THAN REQUIRED FOR POST-INSTALLED ANCHOR EMBEDMENT, USE CAST-IN-PLACE OPTION.
2. LOCATE AND AVOID ALL REINFORCEMENT PRIOR TO DRILLING INTO CONCRETE.
3. THIS DETAIL APPLIES TO REINFORCEMENT WITH fy = 60KSI AND CONCRETE WITH A COMPRESSIVE STRENGTH f'c = 4000 PSI AT 28 DAYS.
4. THE DETAIL APPLIES WHERE EQUIPMENT PADS OR HOUSEKEEPING PADS ARE CALLED OUT ON THE CONSTRUCTION DOCUMENTS.

EQUIPMENT PAD

REV 021218

S-191

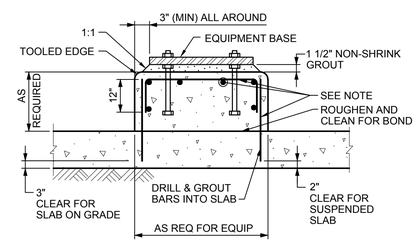

NOTE:

#5@12" OR AS REQUIRED TO DEVELOP ANCHOR BOLTS

EQUIPMENT BASE

REV 110112

S-192

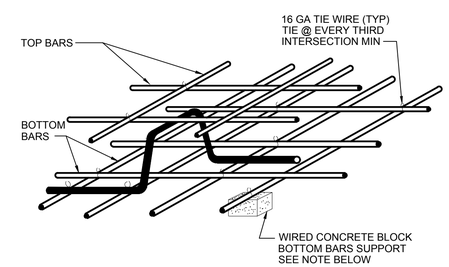

NOTE:

METAL BAR SUPPORTS, IF USED IN SLABS NOT ON GROUND, SHALL NOT MAKE CONTACT WITH FORMS

REINFORCEMENT SUPPORT

REV 110112

S-204

REV	DATE	BY	DESCRIPTION

SCALE: NO SCALE

WARNING: 0 ½ 1 — IF THIS BAR DOES NOT MEASURE 1" THEN DRAWING IS NOT TO SCALE

DATE: JULY 31, 2019
DRAWN BY: J SAKHALKAR
DESIGNED BY: J SAKHALKAR
CHECKED BY: -
APPROVED BY: -

60% DESIGN NOT FOR CONSTRUCTION

This document is an interim document and not suitable for construction. As an interim document, it may contain data that is potentially inaccurate or incomplete and is not to be relied upon without the express written consent of the preparer.

Stantec

LYNN WATER & SEWER COMMISSION

LYNN WATER AND SEWER COMMISSION

PHASE 3 WEST LYNN SEWER SEPARATION

STRUCTURAL GENERAL STANDARD DETAILS - III

SHEET SG-06

195130174

BY: SAKHALKAR, JIDNYASA

PLOT DATE: Tuesday, July 23, 2019

DWG FILE: C:\pwworkdir\d0441185\PHASE 3_BSS_SG-06.dwg

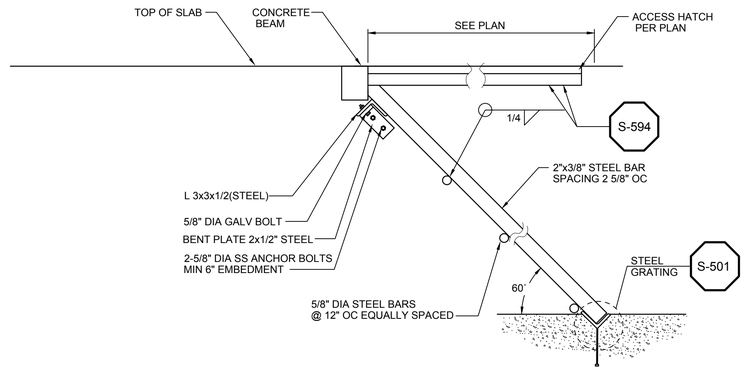

ALUMINUM BAR SCREEN

S-320

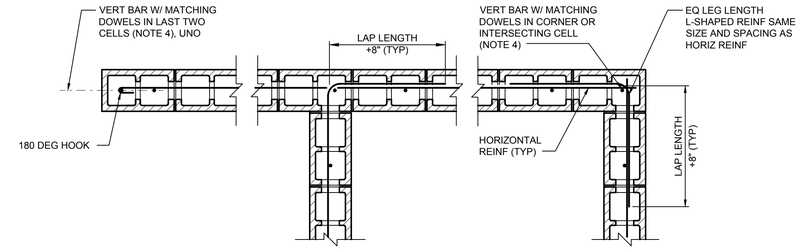

NOTES:

1. BOND BEAM UNITS SHALL BE USED WHERE HORIZONTAL REINFORCING STEEL IS EMBEDDED, AND ABOVE ALL OPENINGS.
2. SINGLE OPEN END, DOUBLE OPEN END, OR H-BLOCK UNITS MAY BE USED AT LOCATIONS OTHER THAN OPENINGS.
3. HOOK HORIZONTAL BARS AROUND VERTICAL BARS AT WALL ENDS, INTERSECTIONS, AND CORNERS.
4. BAR SIZE TO MATCH WALL VERTICAL REINFORCEMENT SIZE, #5 MIN

8" BLOCK WALL SECTIONS

S-403

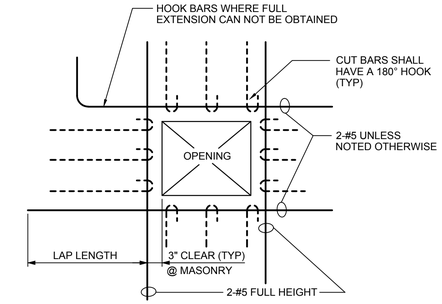

NOTE:

REINFORCING SHOWN IS IN ADDITION TO NORMAL REINFORCING AND SHALL BE PLACED WITH EACH LAYER OF BARS PROVIDED.

REINFORCEMENT AT MASONRY WALL OPENINGS

REV 110112

S-410

	8" CMU	12" CMU	8" OR 12" CMU	8" OR 12" CMU		
BAR SIZE	LAP AND EMBEDMENT LENGTHS (CENTERED)	LAP AND EMBEDMENT LENGTHS (CENTERED)	LAP AND EMBEDMENT LENGTHS (OFF-CENTER) (NOTE 4)	LAP AND EMBEDMENT LENGTHS FOR DWLS IN CONCRETE (OFF-CENTER) (NOTE 4)	90° HOOK LENGTH (SEE BELOW)	ALLOWABLE HOOK EMBEDMENT LENGTH REDUCTION
#3	12"	12"	13"	17"	6"	4"
#4	13"	12"	22"	30"	8"	6"
#5	20"	13"	35"	46"	10"	8"
#6	38"	25"	64"	72"	12"	9"
#7	52"	33"	84"	84"	14"	11"
#8	80"	50"	96"	96"	16"	13"

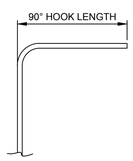

NOTES:

1. THE TABLES SHOWN ARE PER IBC 2015 AND TMS 402-13/ACI 530-13 WITH f'm=2000 PSI AND fy=60,000 PSI.
2. USE HOOK, EMBEDMENT AND LAP SPLICE LENGTHS AS DETERMINED FROM THESE TABLES UNLESS INDICATED OTHERWISE.
3. WHEN BARS OF DIFFERENT SIZES ARE LAP SPLICED, LAP LENGTHS SHALL BE THE LARGER OF THE EMBEDMENT LENGTH OF THE LARGER BAR, OR THE LAP LENGTH OF THE SMALLER BAR.
4. LAP AND EMBEDMENT LENGTHS FOR OFF-CENTER HORIZONTAL AND VERTICAL BARS ARE BASED ON A MINIMUM OF 2" CLEAR COVER AND 2" CLEAR SPACING BETWEEN BARS,UNO. THE LENGTHS REQUIRED FOR BARS EMBEDDED IN CONCRETE HAVE BEEN INCREASED TO ACCOUNT FOR THE POTENTIAL OF SUCH DOWELS BEING MISPLACED DURING THE CONCRETE WORK.
5. MINIMUM REQUIRED HOOK EMBEDMENT LENGTH EQUALS STRAIGHT BAR EMBEDMENT LENGTH MINUS ALLOWABLE HOOK EMBEDMENT LENGTH REDUCTION.
6. MECHANICAL COUPLERS MAY BE SUBSTITUTED FOR LAP SPLICES FOR ANY BAR SIZE. SUBMIT TO ENGINEER FOR APPROVAL.

LAPS, HOOKS AND EMBEDMENTS

FOR 8", 12" CMU

S-415

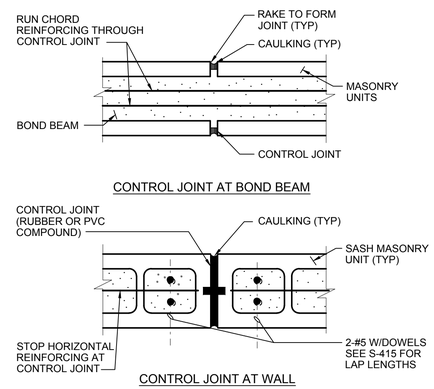

MASONRY CONTROL JOINTS

REV 110112

S-430

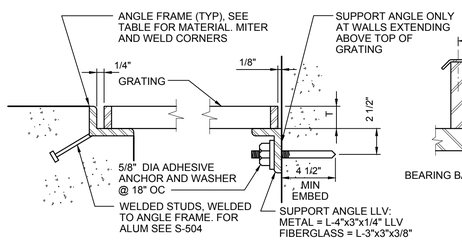

GRATING FRAME TABLE SIZED TO MATCH GRATING (FOR FIBERGLASS USE CONTINUOUS PULTRUDED FIBERGLASS SEAT & ANCHOR)			
GRATING DEPTH T	ANGLE FRAME	GRATING DEPTH T	ANGLE FRAME
1"	1 3/4"x1 1/4"x1/4" (1 1/4"x1 1/4"x1/4")	2"	*2 1/2"x2 1/2"x1/2"
1 1/4"	2"x1 1/2"x1/4" (1 1/2"x1 1/2"x1/4")	2 1/4"	2 1/2"x2 1/2"x1/4"
1 1/2"	1 3/4"x1 3/4"x1/4"	2 1/2"	3"x3"x1/2"
1 3/4"	2"x2"x1/4"		

* OR USE 2 1/2"x2 1/2"x1/4" W/ 1/4" SHIM PLATE WELDED TO BOTTOM

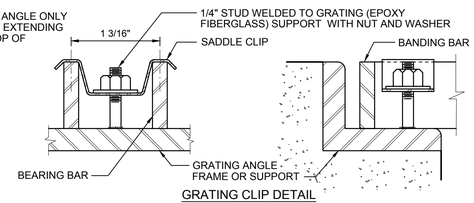

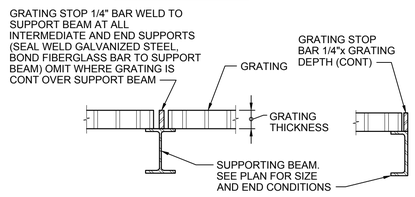

GRATING

S-501

NOTES:

1. UNLESS INDICATED OTHERWISE, ALL GRATING SHALL BE ALUMINUM.
2. GRATING DEPTH TO BE DETERMINED BY MANUFACTURER AND APPROVED BY ENGINEER (UNO).
3. ALL ENDS AND OPENINGS SHALL BE BANDED.
4. WEIGHT OF GRATING SECTION SHALL NOT EXCEED 80 LBS.
5. METAL BEARING BARS SHALL BE DEPTH T x3/16" @1 3/16" OC CROSS BARS SHALL BE @ 4" OC.
6. PROVIDE A MINIMUM OF 4 CLIPS PER GRATING PANEL, APPROX 4" FROM PANEL CORNERS. MAXIMUM CLIP SPACING AT 36" OC.
7. MATERIALS:

GRATING MATERIAL	SUPPORT ANGLE	ANGLE FRAME	WELDED STUDS	GRATING CLIPS AND STUDS	ADHESIVE ANCHORS
ALUMINUM	ALUMINUM	ALUMINUM	ALUMINUM PER S-504	ALUMINUM	TYPE 316 SS
GALV STEEL	GALV STEEL	GALV STEEL	GALV STEEL, 1/2" DIA x4" @12" OC MAX	GALV STEEL	ASTM F1554 GR 36, GALV
STAINLESS STEEL	TYPE 316L SS	TYPE 316L SS	TYPE 316L SS, 1/2" DIA x4" @12" OC MAX	TYPE 316 SS	TYPE 316 SS
FIBERGLASS	FIBERGLASS	FIBERGLASS	FIBERGLASS	FIBERGLASS	TYPE 316 SS

8. ALL GALVANIZED MATERIAL TO BE GALVANIZED AFTER FABRICATION.
9. SEE S-504 FOR ALUMINUM WELDED STUD DETAIL.
10. ALUMINUM IN CONTACT WITH CONCRETE SHALL BE COATED PER THE PROTECTIVE COATING SPECIFICATIONS.
11. FIBERGLASS GRATING - ALL CUT EDGES SHALL BE SEALED WITH RESIN. FOR BONDING, USE AN EPOXY ADHESIVE BONDING AGENT.
12. NOT ALL MATERIAL TYPES MAY BE USED ON A SINGLE PROJECT.
13. PROVIDE ANGLE FRAME OR SUPPORT ANGLES AT ALL SIDES OF OPENINGS (UNO).

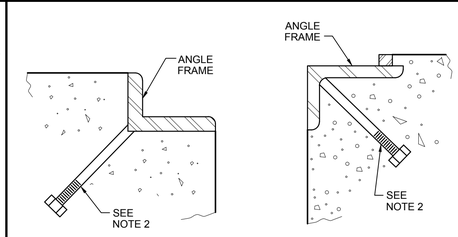

NOTES:

1. SEE STANDARD DETAILS S-501 AND S-502 FOR ANGLE FRAME INFO.
2. NELSON 3/8"DIA x 4" LONG HBA ALUMINUM STUD @ 18" MAX, STUD WELDING ASSOCIATES 3/8"DIA x 4" LONG NON-FLANGED CD ALUMINUM STUD (OR EQUAL) @ 18" MAX WELDED TO ANGLE FRAME WITH 3/8-16 ALUMINUM HEX NUT. TACK WELD NUT TO HEADED STUD.
3. USE MIN OF 2 STUDS PER ANGLE FRAME SECTION.
4. ALUMINUM IN CONTACT WITH CONCRETE SHALL BE COATED PER THE PROTECTIVE COATING SPECIFICATIONS.

ALUMINUM WELDED STUD

REV 123014

S-504

REV	DATE	BY	DESCRIPTION

SCALE: NO SCALE

WARNING: 0 ½ 1 — IF THIS BAR DOES NOT MEASURE 1" THEN DRAWING IS NOT TO SCALE

DATE	JULY 31, 2019
DRAWN BY	J SAKHALKAR
DESIGNED BY	J SAKHALKAR
CHECKED BY	-
APPROVED BY	-

60% DESIGN NOT FOR CONSTRUCTION

This document is an interim document and not suitable for construction. As an interim document, it may contain data that is potentially inaccurate or incomplete and is not to be relied upon without the express written consent of the preparer.

Stantec

LYNN WATER & SEWER COMMISSION

LYNN WATER AND SEWER COMMISSION

PHASE 3 WEST LYNN SEWER SEPARATION

STRUCTURAL GENERAL STANDARD DETAILS - IV

SHEET SG-07

195130174

BY: SAKHALKAR, JIDNYASA

PLOT DATE: Tuesday, July 23, 2019

DWG FILE: C:\pwworkdir\d0441185\PHASE 3_BSS_SG-07.dwg

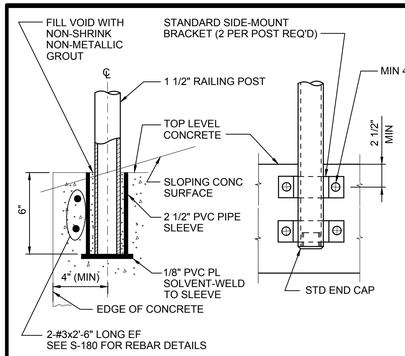

A - POST INSERT IN CONCRETE (SEE NOTE 2)

B - SIDE-MOUNTING BRACKET

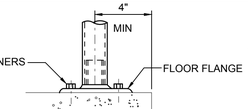

C - FLOOR FLANGE (WHEN REQUIRED)

NOTES:

1. IF FASTENING INTO CONCRETE, FASTENERS SHALL BE ADHESIVE ANCHORS.
2. POST INSERTS NOT ALLOWED IN APPLICATIONS SUBJECT TO FREQUENT FREEZING.
3. USE POST INSERT UNLESS INDICATED OTHERWISE.
4. USE DETAIL C IN LUE OF POST INSERT WHERE WALL/ CURB THICKNESS IS LESS THAN 8"
5. CONTRACTOR REQUIRED TO DESIGN RAILING SYSTEM PER SPECIFICATIONS.

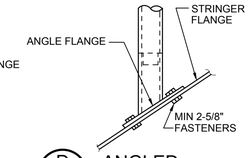

D - ANGLED FLANGE

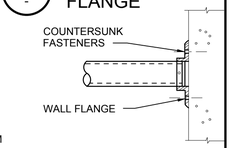

E - WALL FLANGE

RAILING, GUARDRAIL AND HANDRAIL SUPPORT

S-512

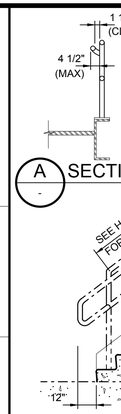

A - SECTION

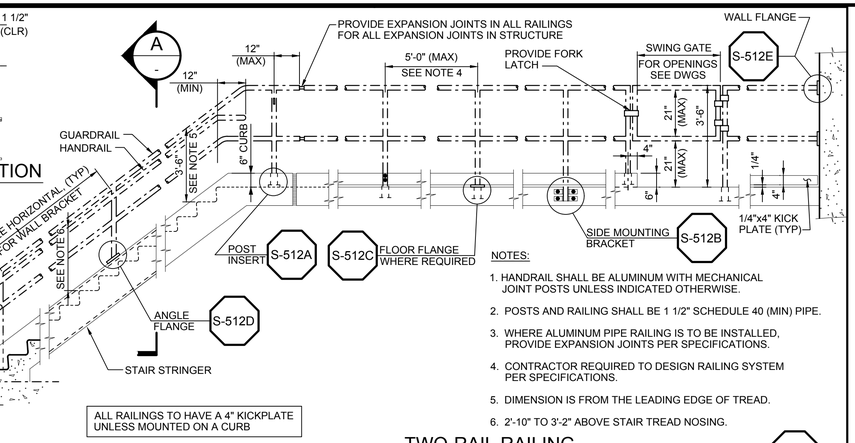

ALL RAILINGS TO HAVE A 4" KICKPLATE UNLESS MOUNTED ON A CURB

NOTES:

1. HANDRAIL SHALL BE ALUMINUM WITH MECHANICAL JOINT POSTS UNLESS INDICATED OTHERWISE.
2. POSTS AND RAILING SHALL BE 1 1/2" SCHEDULE 40 (MIN) PIPE.
3. WHERE ALUMINUM PIPE RAILING IS TO BE INSTALLED, PROVIDE EXPANSION JOINTS PER SPECIFICATIONS.
4. CONTRACTOR REQUIRED TO DESIGN RAILING SYSTEM PER SPECIFICATIONS.
5. DIMENSION IS FROM THE LEADING EDGE OF TREAD.
6. 2'-10" TO 3'-2" ABOVE STAIR TREAD NOSING.

TWO-RAIL RAILING

REV 121613 S-515

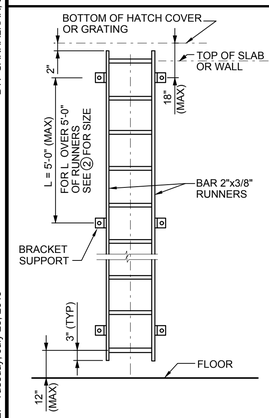

1 STANDARD LADDER WITH RUNNER SUPPORTS AT 5'-0" OC MAX

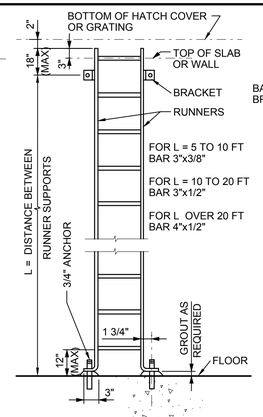

2 LADDER WITH RUNNER SUPPORTS OVER 5'-0" OC

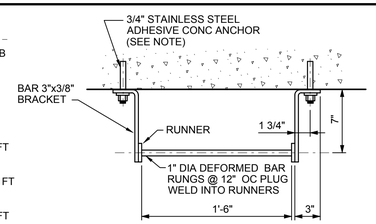

PLAN

NOTES:

1. LADDERS SHALL BE ALUMINUM UNLESS INDICATED OTHERWISE.
2. ANCHORS & FASTENERS SHALL BE STAINLESS STEEL, EXCEPT FASTENERS FOR GALVANIZED STEEL LADDERS SHALL BE GALVANIZED STEEL.
3. PROVIDE ANCHOR BOLT INSERTS FOR PRESTRESSED TANK WALLS.
4. LADDERS SHALL BE OSHA AND ANSI APPROVED.
5. FRP LADDER MEMBERS SHALL BE SIZED BY THE MANUFACTURER PER THE SPECIFICATIONS.

FIXED LADDER

REV 121613 S-531

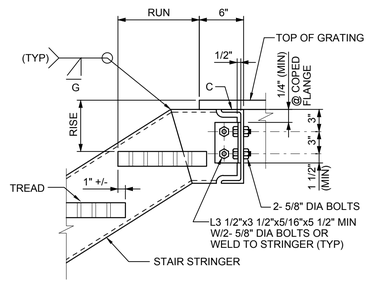

NOTES:

1. FOR CHANNEL SIZES SEE PLAN.
2. HANDRAIL NOT SHOWN.
3. COPE STRINGER MIN AS REQ'D.

STAIR TOP TO CHANNEL CONNECTION

REV 110112 S-542

NOTES:

1. UNLESS OTHERWISE INDICATED, STAIRS SHALL CONSIST OF ALUMINUM C10x6.136 STRINGERS AND SERRATED ALUM GRATING TREADS.
2. STEEL STAIRS SHALL CONSIST OF STEEL C10x15.3 STRINGERS AND SERRATED ALUM GRATING TREADS.
3. FRP STAIRS SHALL CONSIST OF ALUM C10x6.136 STRINGERS WITH FRP GRATING TREADS.
4. ALL BOLTS AND CONCRETE ANCHORS SHALL BE SS.
5. STAIR HANDRAIL NOT SHOWN FOR CLARITY.

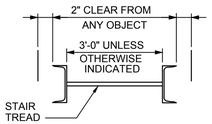

CROSS SECTION

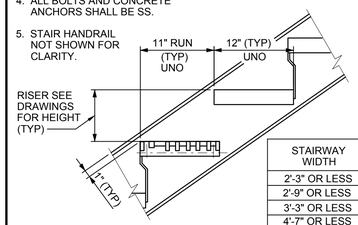

STAIRWAY WIDTH	BEARING BARS ALUMINUM TREAD
2'-3" OR LESS	1 1/4"x3/16"
2'-9" OR LESS	1 1/2"x3/16"
3'-3" OR LESS	1 3/4"x3/16"
4'-7" OR LESS	2"x3/16"

METAL STAIR

OPEN RISER

REV 110112 S-544

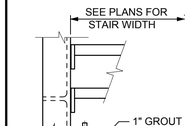

NOTES:

1. USE BASE PLATE OF SAME METAL AS STRINGER.
2. PROVIDE PROTECTION FOR DIS-SIMILAR METALS AND CONCRETE AS SPECIFIED.
3. STAIR HANDRAIL NOT SHOWN.

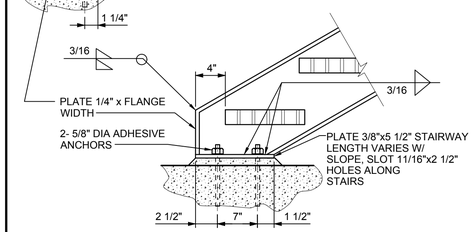

STAIR BOTTOM TO CONCRETE CONNECTION

REV 110112 S-545

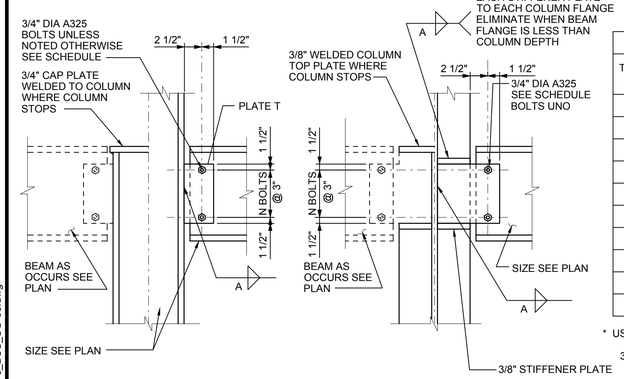

BEAM TO BEAM CONNECTION SCHEDULE				
TYPICAL BEAM	NO OF BOLTS N	PLATE THICKNESS T	WELD SIZE A	COMMENTS
W8				
W10				
W12				
W14				
W16				
W18				
W21				
W24				
W27				
W36				

* USE A DOUBLE ROW OF BOLTS - 5 PER ROW

3" BETWEEN ROWS AND 1 1/2" EDGE DISTANCE

BEAM TO COLUMN CONNECTION

REV 110112 S-561

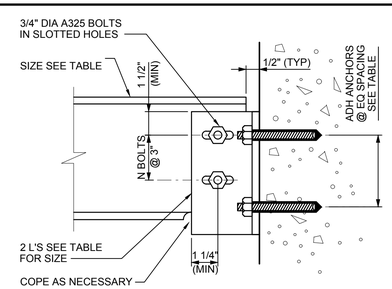

CONNECTION SCHEDULE			
BEAM SIZE	DOUBLE ANGLE SIZE	# 0F BOLTS N	ADHESIVE ANCHORS NUMBER AND SIZE

BEAM TO CONCRETE CONNECTION

FOR SS OR ALUMINUM BEAMS USE SS BOLTS AND ANCHORS

REV 110112 S-563

REV	DATE	BY	DESCRIPTION

SCALE: NO SCALE

WARNING: 0 ½ 1 — IF THIS BAR DOES NOT MEASURE 1" THEN DRAWING IS NOT TO SCALE

DATE	JULY 31, 2019
DRAWN BY	J SAKHALKAR
DESIGNED BY	J SAKHALKAR
CHECKED BY	-
APPROVED BY	-

60% DESIGN NOT FOR CONSTRUCTION

This document is an interim document and not suitable for construction. As an interim document, it may contain data that is potentially inaccurate or incomplete and is not to be relied upon without the express written consent of the preparer.

Stantec

LYNN WATER & SEWER COMMISSION

LYNN WATER AND SEWER COMMISSION

PHASE 3 WEST LYNN SEWER SEPARATION

STRUCTURAL GENERAL STANDARD DETAILS - V

SHEET SG-08

195130174

DWG FILE: C:\pwworkdir\d0441185\PHASE 3_BSS_SG-08.dwg

PLOT DATE: Tuesday, July 23, 2019

BY: SAKHALKAR, JIDNYASA

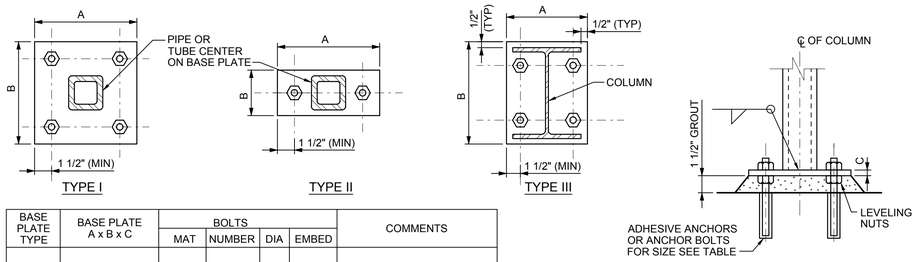

BASE PLATE TYPE	BASE PLATE A x B x C	BOLTS				COMMENTS
		MAT	NUMBER	DIA	EMBED	

COLUMN BASEPLATE

REV 110112 S-567

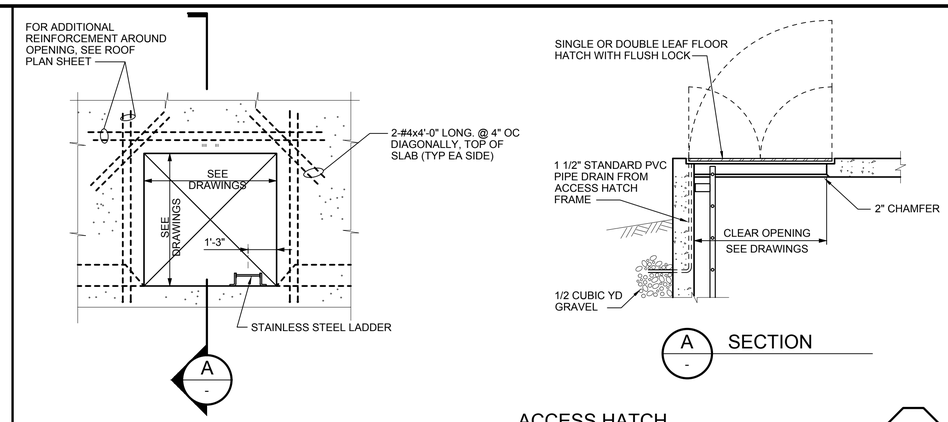

ACCESS HATCH

REV 110112 S-594

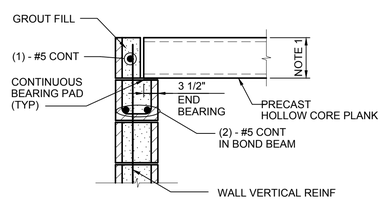

NOTE:
1. REFER TO PLAN OR SECTION DRAWING FOR THE THICKNESS OF PRECAST HOLLOW CORE PLANK.

HOLLOWCORE PLANK CMU CONNECTION TYPE-I

S-901

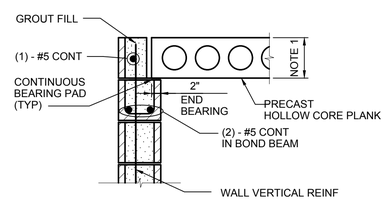

NOTE:
1. REFER TO PLAN OR SECTION DRAWING FOR THE THICKNESS OF PRECAST HOLLOW CORE PLANK.

HOLLOWCORE PLANK CMU CONNECTION TYPE-II

S-902

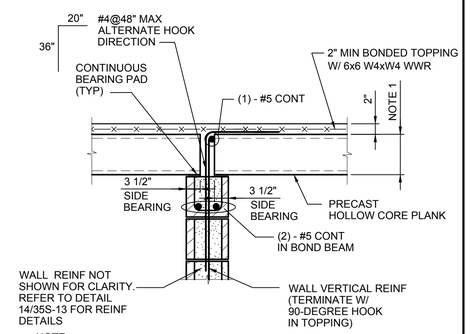

NOTE:
1. REFER TO PLAN OR SECTION DRAWING FOR THE THICKNESS OF PRECAST HOLLOW CORE PLANK.

HOLLOWCORE PLANK CMU CONNECTION TYPE-III

S-903

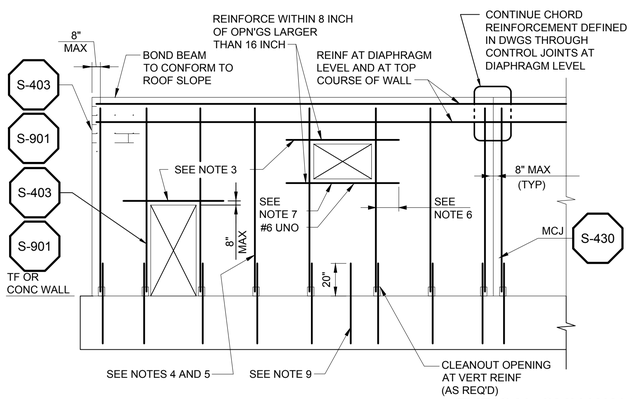

NOTES:
1. LAP LENGTHS AND EMBEDMENTS SHALL COMPLY WITH S-415 UNO.
2. OPENING LOCATIONS SHALL BE COORDINATED WITH ARCHITECTURAL AND MECHANICAL PLANS, ELEVATIONS & DETAILS.
3. SEE LINTEL SCHEDULE FOR REINF OVER OPENINGS DETAIL S-905.
4. SEE PLANS AND SECTIONS FOR HORZ AND VERT REINF.
5. PROVIDE MATCHING DOWELS INTO FOUNDATION FOR ALL VERT REINF, UNO.
6. DIMENSION SHALL BE THE LARGER OF THE EMBED LENGTH PER S-415, 40, OR 24 INCH.
7. PROVIDE (1)-#6 AT 8 INCH WALL AND (2)-#6 FOR WALLS THICKER THAN 8 INCH.
8. ONLY CELLS WITH REINFORCEMENT SHALL BE FILLED WITH GROUT.

TYPICAL CMU WALL REINFORCING (UNO)

S-904

AREA	B	D	BOTTOM REINF	TOP REINF	STIRRUPS	REMARKS
ELECTRICAL BUILDING	12"	8"	2 - #5	-	-	L1
	12"	16"	2 - #5	2 - #5	#3@12"	L2

MASONRY LINTEL NOTES:
1. PROVIDE 8" MIN BEARING AT EACH SIDE OF CLEAR SPAN, UNO. BEARING CELLS SHALL BE FULLY GROUTED FROM FOUNDATION TO LINTEL.
2. ALL REINFORCING SHALL BE CONTINUOUS AND EXTEND A FULL LAP LENGTH BEYOND THE OPENING. WHERE WALLS STOP SHORT OF THE FULL LAP LENGTH, THE REINFORCING BARS SHALL BE TERMINATED IN THE LAST CELL WITH A STANDARD HOOK.
3. THIS CMU LINTEL REINFORCING APPLIES UNLESS OTHERWISE INDICATED ON THE DRAWINGS.

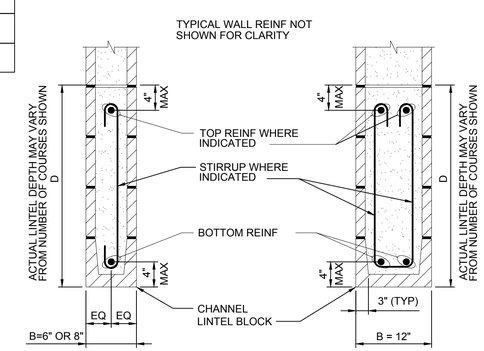

TYPICAL LINTEL DETAILS FOR 6" AND 8" WALL

TYPICAL LINTEL DETAILS FOR 12" WALL

CMU LINTEL REINFORCING

S-905

REV	DATE	BY	DESCRIPTION

SCALE: NO SCALE

WARNING: 0 ½ 1 — IF THIS BAR DOES NOT MEASURE 1" THEN DRAWING IS NOT TO SCALE

DATE: JULY 31, 2019
DRAWN BY: J SAKHALKAR
DESIGNED BY: J SAKHALKAR
CHECKED BY: -
APPROVED BY: -

60% DESIGN NOT FOR CONSTRUCTION

This document is an interim document and not suitable for construction. As an interim document, it may contain data that is potentially inaccurate or incomplete and is not to be relied upon without the express written consent of the preparer.

Stantec

LYNN WATER & SEWER COMMISSION

LYNN WATER AND SEWER COMMISSION

PHASE 3 WEST LYNN SEWER SEPARATION

STRUCTURAL GENERAL STANDARD DETAILS - VI

SHEET SG-09

195130174

DWG FILE: C:\pwworkdir\d0441185\PHASE 3_BSS_SG-09.dwg
PLOT DATE: Tuesday, July 23, 2019
BY: SAKHALKAR, JIDNYASA

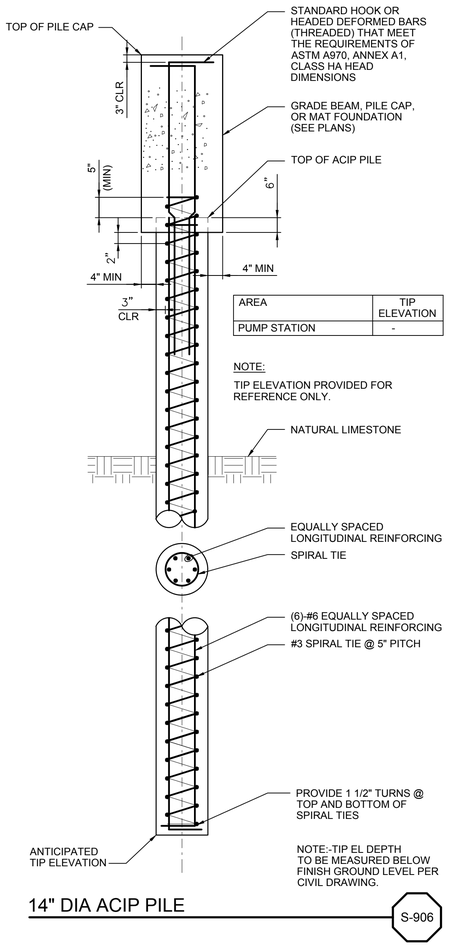

AREA	TIP ELEVATION
PUMP STATION	-

NOTE:

TIP ELEVATION PROVIDED FOR REFERENCE ONLY.

14" DIA ACIP PILE

S-906

SECTION

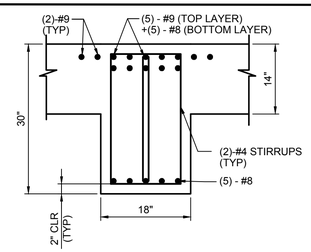

T-BEAM AT SUPPORT

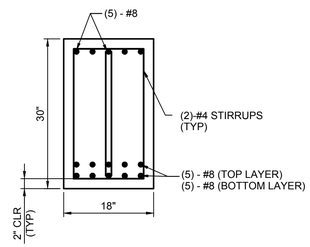

AT MID SPAN

B2 WET WELL BEAM

ELEVATION

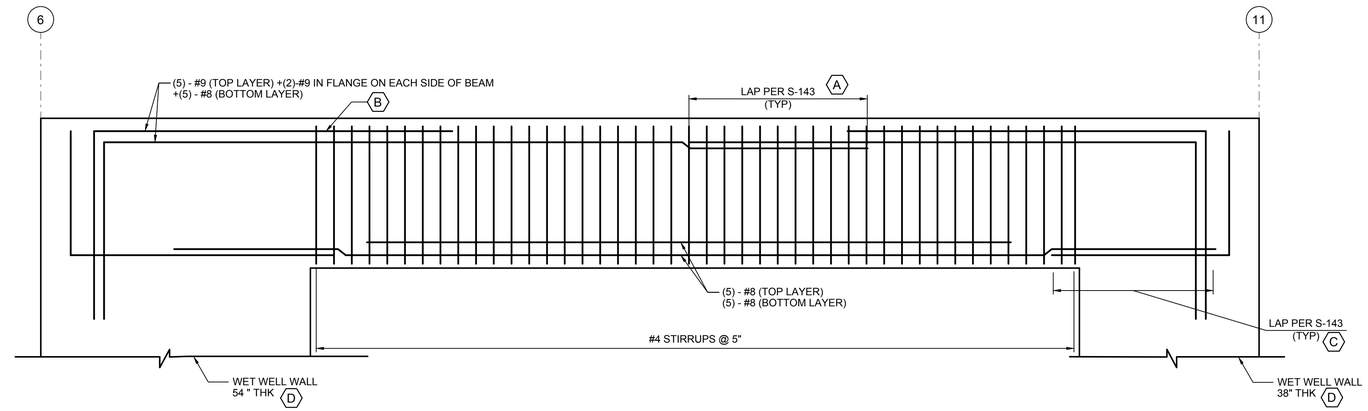

SHEET KEYNOTES

A. LAP FOR TOP BARS SHALL BE AT MID SPAN OF EACH BEAM.

B. ADDITIONAL BARS AT SUPPORT.

C. LAP FOR BOTTOM BARS SHALL BE LOCATED OVER THE SUPPORTS.

D. WALL REINFORCEMENT WITH STIRRUPS NOT SHOWN FOR CLARITY.

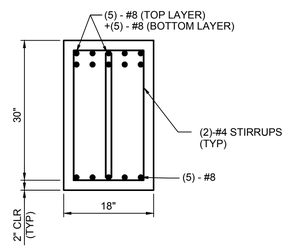

AT SUPPORT

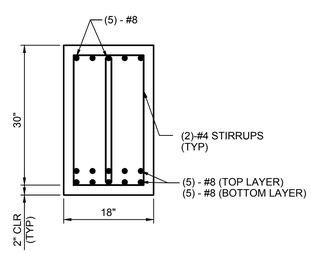

AT MID SPAN

B3 VALVE VAULT BEAM

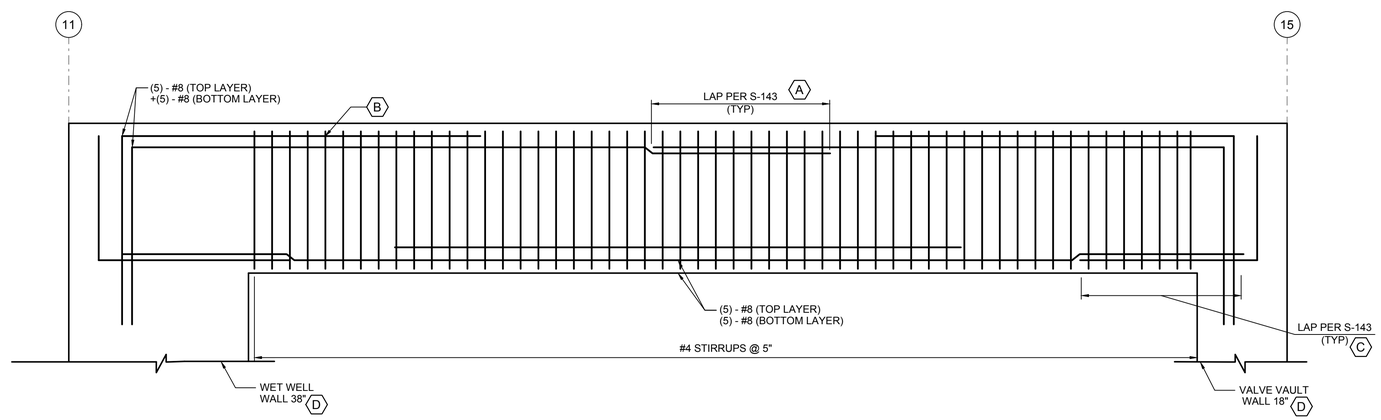

REV	DATE	BY	DESCRIPTION

SCALE: NO SCALE

WARNING: 0 ½ 1 — IF THIS BAR DOES NOT MEASURE 1" THEN DRAWING IS NOT TO SCALE

DATE: JULY 31, 2019
DRAWN BY: J SAKHALKAR
DESIGNED BY: J SAKHALKAR
CHECKED BY: -
APPROVED BY: -

60% DESIGN
NOT FOR CONSTRUCTION

This document is an interim document and not suitable for construction. As an interim document, it may contain data that is potentially inaccurate or incomplete and is not to be relied upon without the express written consent of the preparer.

Stantec

LYNN WATER & SEWER COMMISSION

LYNN WATER AND SEWER COMMISSION

PHASE 3 WEST LYNN SEWER SEPARATION

STRUCTURAL GENERAL
STANDARD DETAILS - VII

SHEET SG-10

195130174

BY: SAKHALKAR, JIDNYASA
PLOT DATE: Tuesday, July 23, 2019
DWG FILE: C:\pwworkdir\d0441185\PHASE 3_BSS_SG-10.dwg

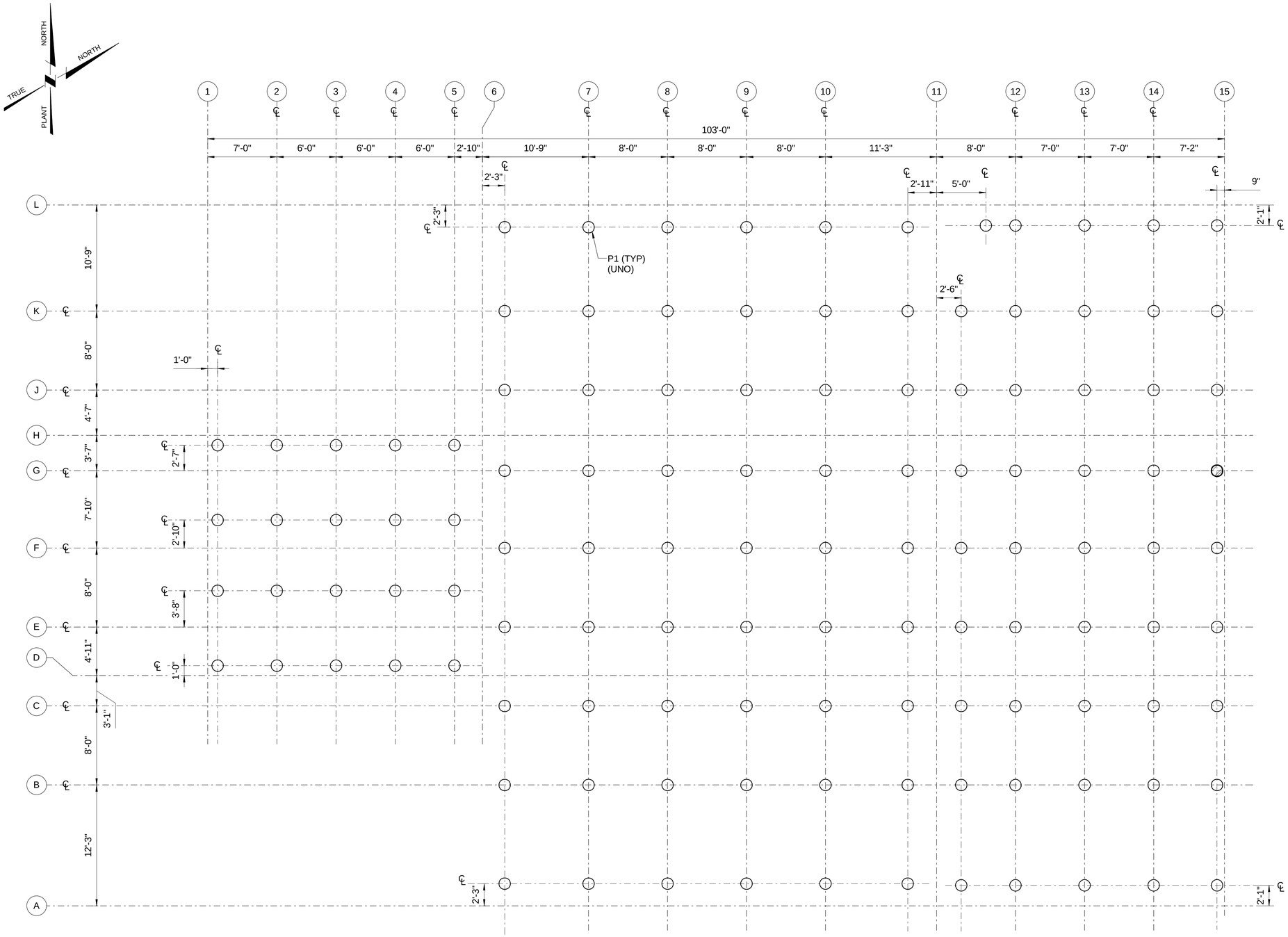

PILE PLAN

0 4 8 12

SCALE: 3/16" = 1'-0"

GENERAL SHEET NOTES

1. GRID LINES ARE TO THE OUTSIDE FACE OF EXTERIOR CONCRETE WALLS AND CENTER LINE OF PILES UNO.

PILE SCHEDULE

PILE TYPE	PILE DIA	PILE CAPACITY		QTY
		TENSION (Kips)	COMP (Kips)	
P1	14"	TBD	TBD	TBD
P2	16"	TBD	TBD	TBD

REV	DATE	BY	DESCRIPTION

SCALE: 3/16" = 1'-0"

WARNING: 0 ½ 1 — IF THIS BAR DOES NOT MEASURE 1" THEN DRAWING IS NOT TO SCALE

DATE: JULY 31, 2019
DRAWN BY: J SAKHALKAR
DESIGNED BY: J SAKHALKAR
CHECKED BY: -
APPROVED BY: -

60% DESIGN
NOT FOR CONSTRUCTION

This document is an interim document and not suitable for construction. As an interim document, it may contain data that is potentially inaccurate or incomplete and is not to be relied upon without the express written consent of the preparer.

Stantec

LYNN WATER & SEWER COMMISSION

LYNN WATER AND SEWER COMMISSION

PHASE 3 WEST LYNN SEWER SEPARATION

STRUCTURAL - PUMP STATION
PILE PLAN

SHEET
S-01

195130174

BY : J SAKHALKAR

PLOT DATE: 7/26/2019 5:23:38 PM

B:\d0537429\Lynn_Structural_Model.rvt

GENERAL SHEET NOTES

1. CONTRACTOR TO CONFIRM AND COORDINATE SIZE AND LOCATION OF EQUIPMENT AND PIPING WITH CIVIL AND MECHANICAL DRAWINGS.
2. REFER TO MECHANICAL DRAWINGS FOR LOCATION AND SIZE OF OPENINGS AND PENETRATIONS.
3. GRID LINES ARE TO THE OUTSIDE FACE OF EXTERIOR CONCRETE WALLS UNO.

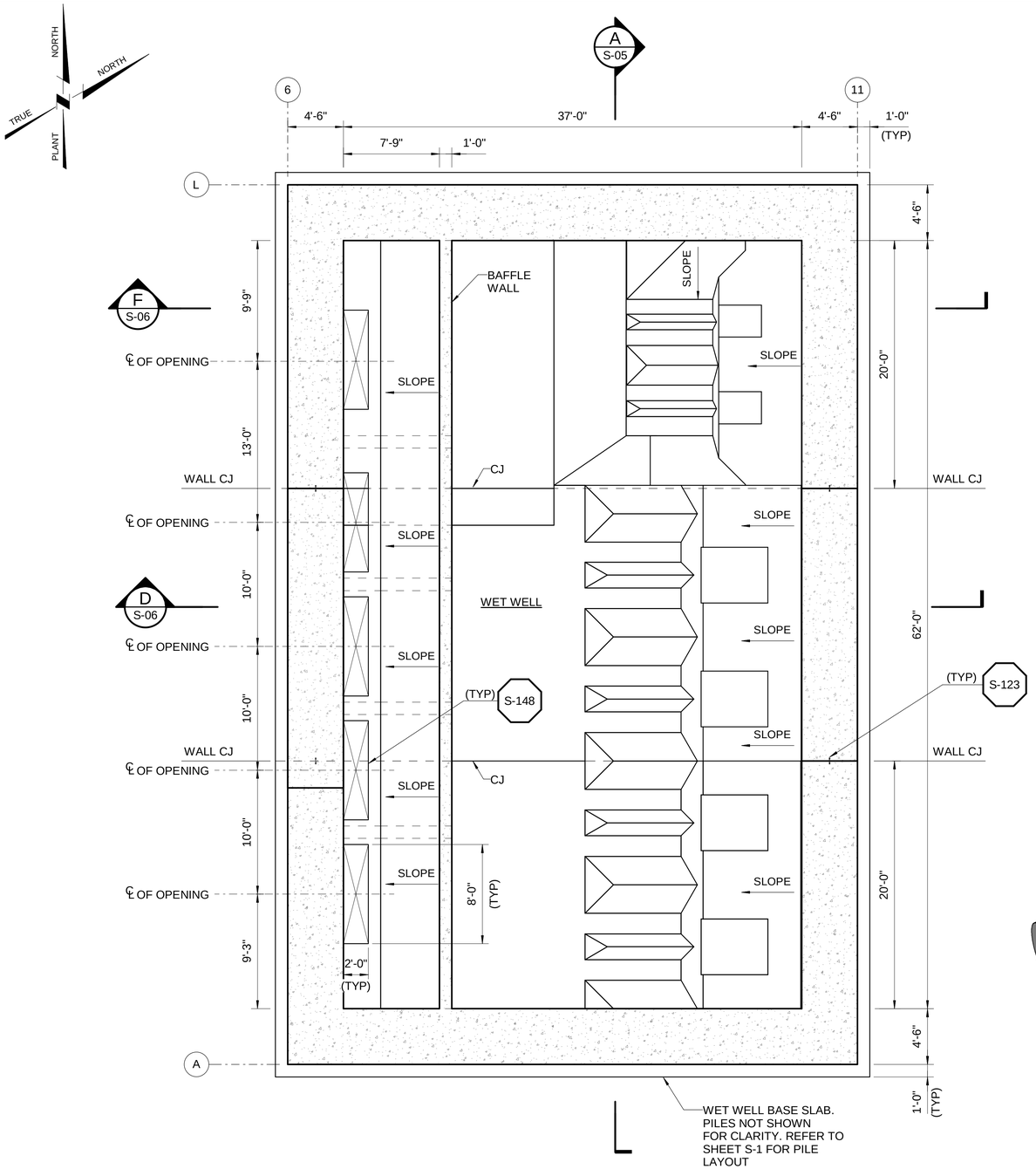

PUMP STATION BOTTOM PLAN AT EL -16.00

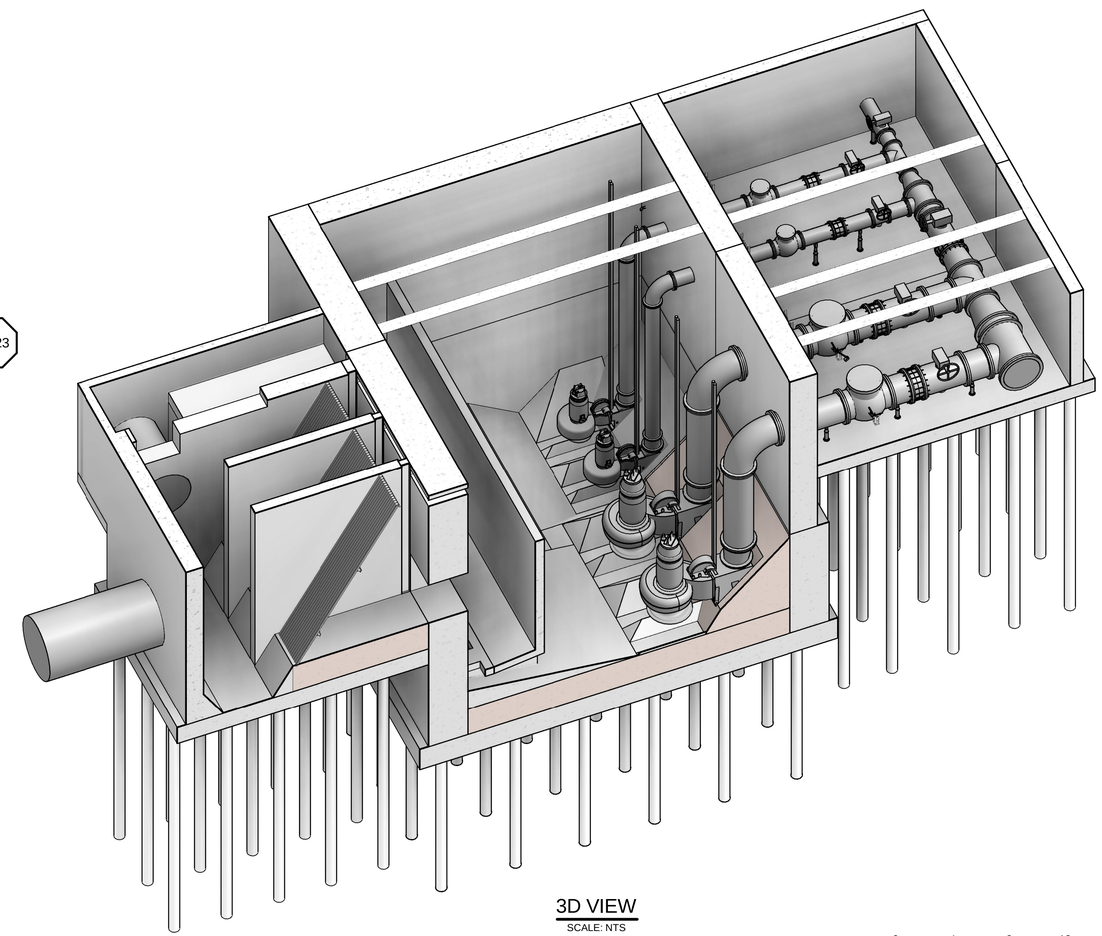

3D VIEW

SCALE: NTS

0 4 8 12

SCALE: 3/16" = 1'-0"

BY : J SAKHALKAR

PLOT DATE: 7/26/2019 5:23:45 PM

B:\0537429Lynn_Structural_Model.rvt

REV	DATE	BY	DESCRIPTION

SCALE: 3/16" = 1'-0"

WARNING: 0 ½ 1 — IF THIS BAR DOES NOT MEASURE 1" THEN DRAWING IS NOT TO SCALE

DATE	JULY 31, 2019
DRAWN BY	J SAKHALKAR
DESIGNED BY	J SAKHALKAR
CHECKED BY	-
APPROVED BY	-

60% DESIGN
NOT FOR CONSTRUCTION

This document is an interim document and not suitable for construction. As an interim document, it may contain data that is potentially inaccurate or incomplete and is not to be relied upon without the express written consent of the preparer.

Stantec

LYNN WATER & SEWER COMMISSION

LYNN WATER AND SEWER COMMISSION

PHASE 3 WEST LYNN SEWER SEPARATION

STRUCTURAL - PUMP STATION
BOTTOM PLAN AT EL -16.00

SHEET S-02

195130174

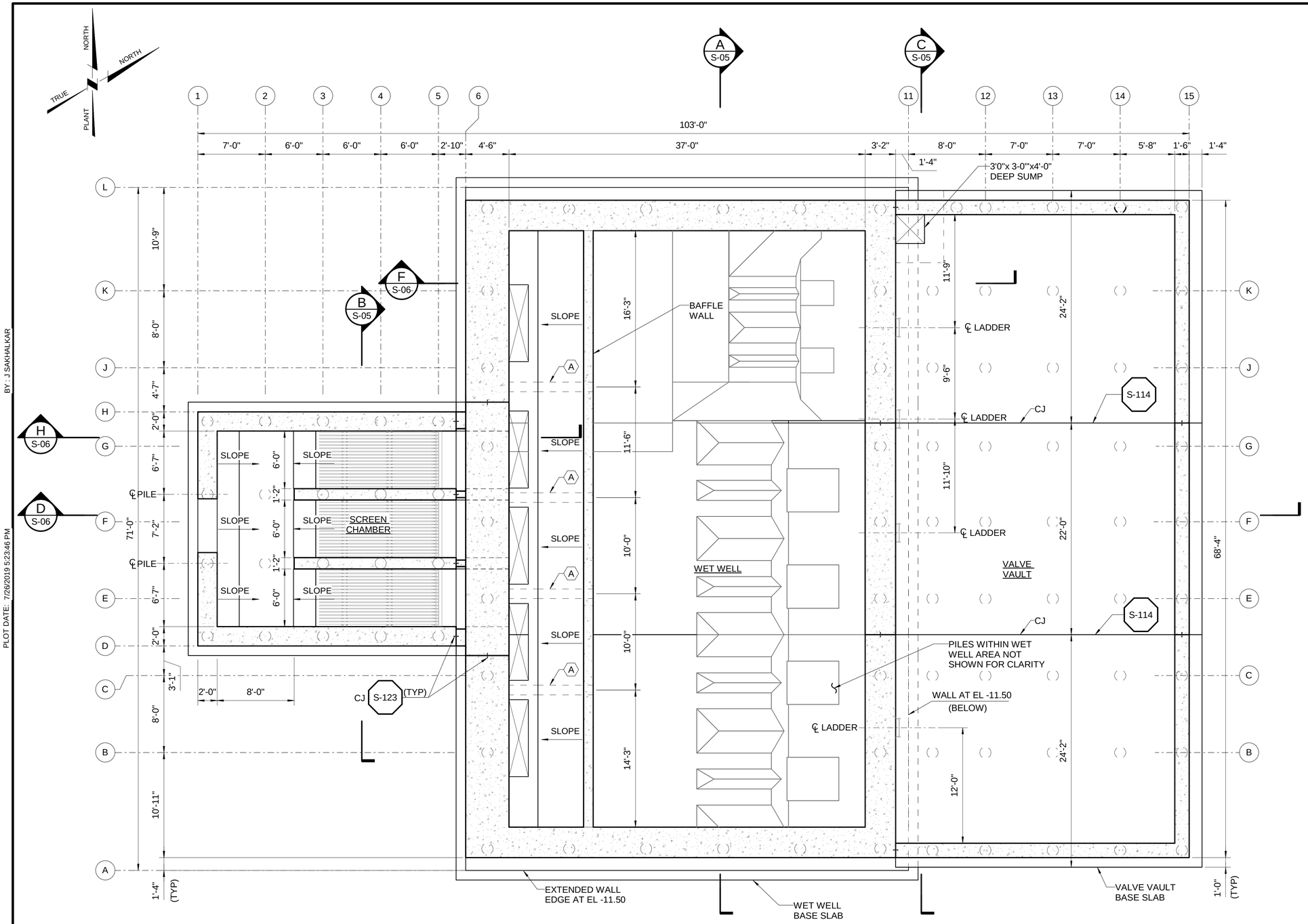

GENERAL SHEET NOTES

1. CONTRACTOR TO CONFIRM AND COORDINATE SIZE AND LOCATION OF EQUIPMENT AND PIPING WITH CIVIL AND MECHANICAL DRAWINGS.
2. REFER TO MECHANICAL DRWINGS FOR LOCATION AND SIZE OF OPENINGS AND PENETRATIONS.
3. GRID LINES ARE TO THE OUTSIDE FACE OF EXTERIOR CONCRETE WALLS AND CENTER LINES OF PILES UNO.

SHEET KEYNOTES

A. 12" THICK CONCRETE WALL BELOW

0 4 8 12
SCALE: 3/16" = 1'-0"

PUMP STATION INTERMEDIATE PLAN

REV	DATE	BY	DESCRIPTION

SCALE: 3/16" = 1'-0"

WARNING: 0 ½ 1 — IF THIS BAR DOES NOT MEASURE 1" THEN DRAWING IS NOT TO SCALE

DATE: JULY 31, 2019
DRAWN BY: J SAKHALKAR
DESIGNED BY: J SAKHALKAR
CHECKED BY: -
APPROVED BY: -

60% DESIGN
NOT FOR CONSTRUCTION
This document is an interim document and not suitable for construction. As an interim document, it may contain data that is potentially inaccurate or incomplete and is not to be relied upon without the express written consent of the preparer.

Stantec

LYNN WATER & SEWER COMMISSION

LYNN WATER AND SEWER COMMISSION
PHASE 3 WEST LYNN SEWER SEPARATION
STRUCTURAL - PUMP STATION INTERMEDIATE PLAN

SHEET S-03

195130174

BY : J SAKHALKAR
PLOT DATE: 7/26/2019 5:23:46 PM
B:\05357429\Lynn_Structural_Model.rvt

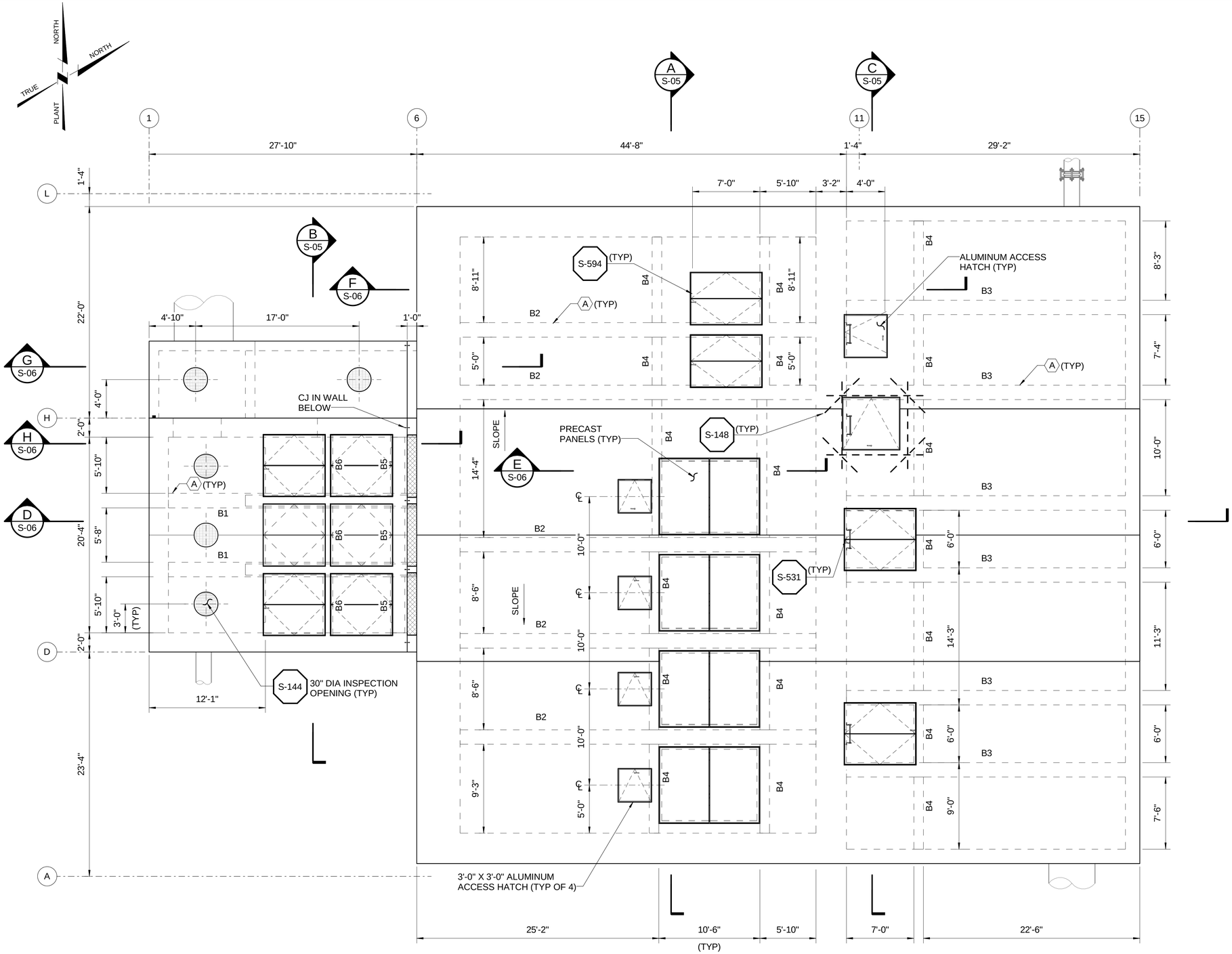

PLAN AT TOP LEVEL

0 4 8 12

SCALE: 3/16" = 1'-0"

GENERAL SHEET NOTES

1. CONTRACTOR TO CONFIRM AND COORDINATE SIZE AND LOCATION OF EQUIPMENT AND PIPING WITH CIVIL AND MECHANICAL DRAWINGS.
2. REFER TO MECHANICAL DRAWINGS FOR LOCATION AND SIZE OF OPENINGS AND PENETRATIONS.
3. GRID LINES ARE TO THE OUTSIDE FACE OF EXTERIOR CONCRETE WALLS.

SHEET KEYNOTES

A. 18" WIDE CONCRETE BEAM

BY : J SAKHALKAR

PLOT DATE: 7/26/2019 5:23:47 PM

B:\0537429\Lynn_Structural_Model.rvt

REV	DATE	BY	DESCRIPTION

SCALE: 3/16" = 1'-0"

WARNING: 0 ½ 1 — IF THIS BAR DOES NOT MEASURE 1" THEN DRAWING IS NOT TO SCALE

DATE	JULY 31, 2019
DRAWN BY	J SAKHALKAR
DESIGNED BY	J SAKHALKAR
CHECKED BY	-
APPROVED BY	-

60% DESIGN
NOT FOR CONSTRUCTION

This document is an interim document and not suitable for construction. As an interim document, it may contain data that is potentially inaccurate or incomplete and is not to be relied upon without the express written consent of the preparer.

Stantec

LYNN WATER & SEWER COMMISSION

LYNN WATER AND SEWER COMMISSION

PHASE 3 WEST LYNN SEWER SEPARATION

STRUCTURAL - PUMP STATION
PLAN AT TOP LEVEL

SHEET S-04

195130174

GENERAL SHEET NOTES

1. CONTRACTOR TO CONFIRM AND COORDINATE SIZE AND LOCATION OF EQUIPMENT AND PIPING WITH CIVIL AND MECHANICAL DRAWINGS.
2. REFER TO MECHANICAL DRAWINGS FOR LOCATION AND SIZE OF OPENINGS AND PENETRATIONS.
3. GRID LINES ARE TO THE OUTSIDE FACE OF EXTERIOR CONCRETE WALLS. REFER TO OVERALL FOUNDATION PLAN SHEET S-01 FOR GRID LINE INFORMATION NOT SHOWN ON THIS PLAN.

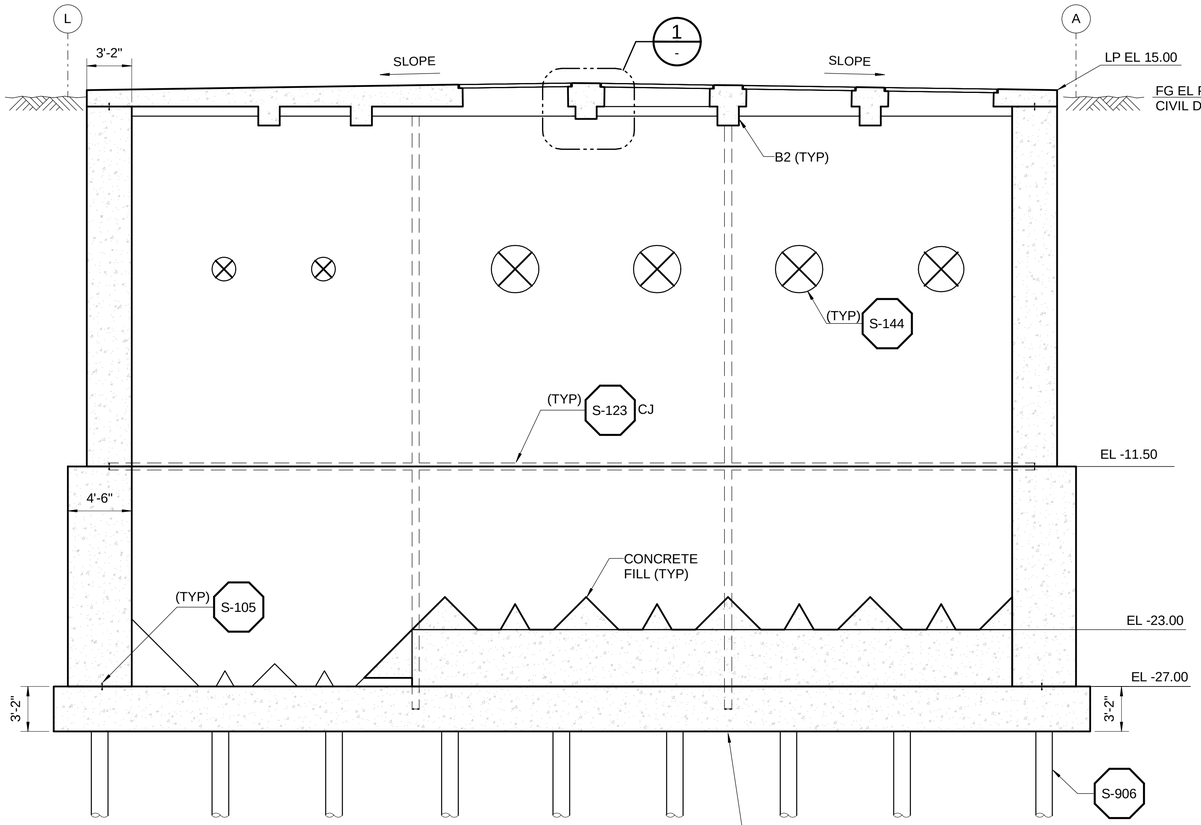

A SECTION
S-02 SCALE: 3/16" = 1'-0"
S-03
S-04

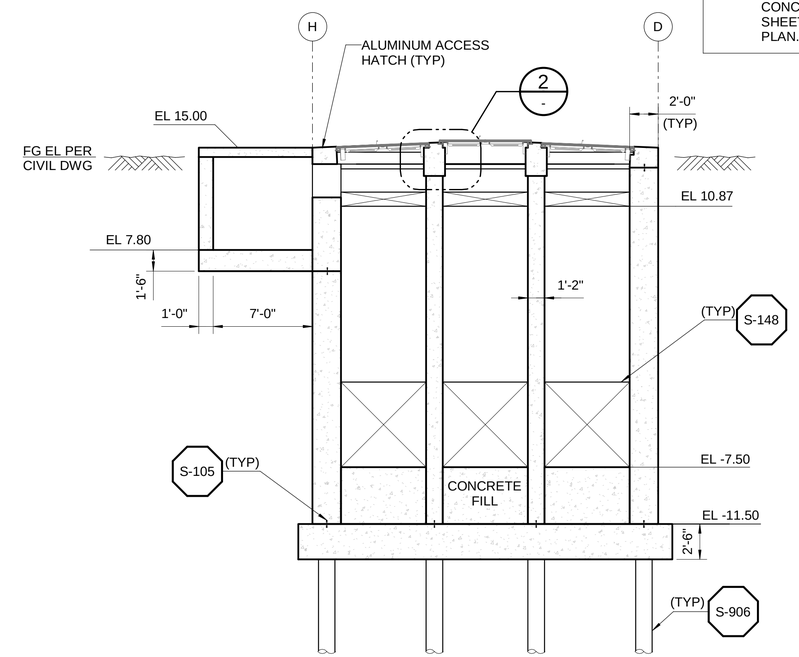

B SECTION
S-03 SCALE: 3/16" = 1'-0"
S-04

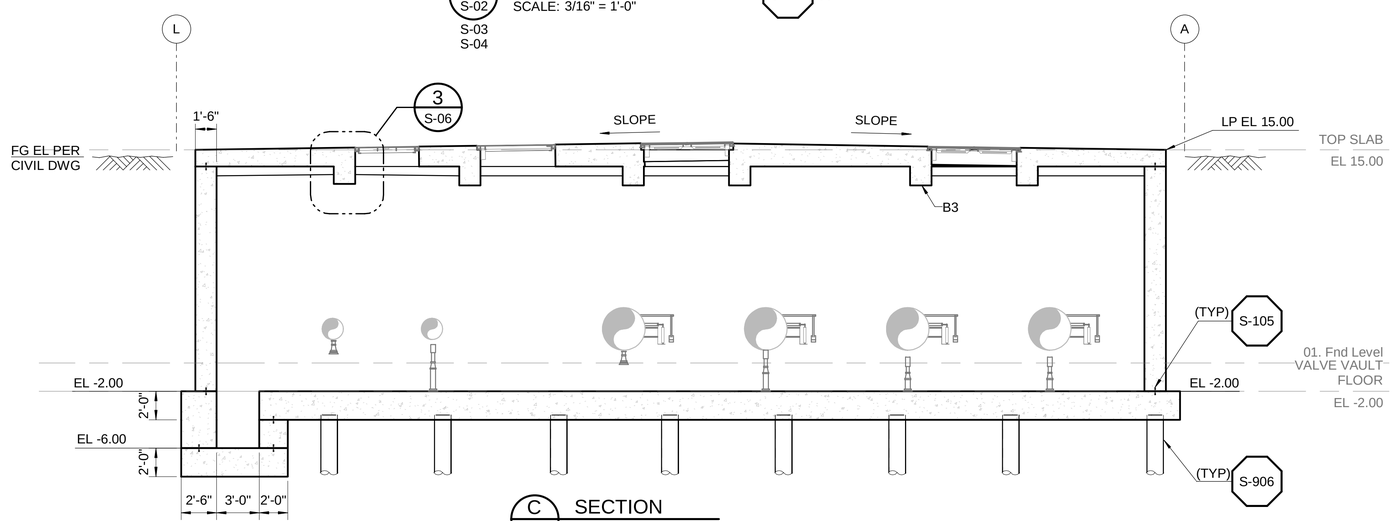

C SECTION
S-03 SCALE: 3/16" = 1'-0"
S-04

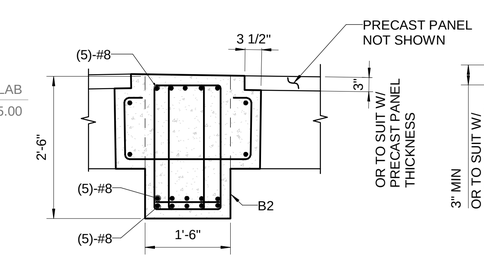

1 DETAIL
S-05 SCALE: 3/4" = 1'-0"

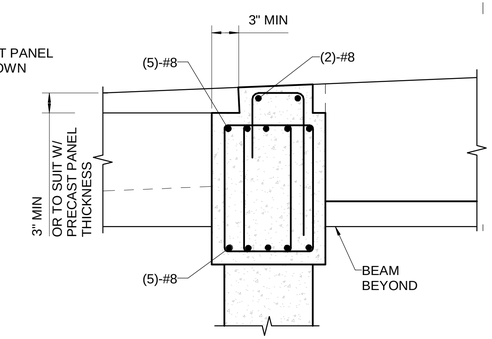

2 DETAIL
S-05 SCALE: 1" = 1'-0"

0 1 2
SCALE: 1" = 1'-0"
0 1 2 3
SCALE: 3/4" = 1'-0"
0 4 8 12
SCALE: 3/16" = 1'-0"

BY : J SAKHALKAR

PLOT DATE: 7/26/2019 5:23:47 PM

B:\0537429\Lynn_Structural_Model.rvt

REV	DATE	BY	DESCRIPTION

SCALE: AS SHOWN

WARNING: 0 ½ 1 — IF THIS BAR DOES NOT MEASURE 1" THEN DRAWING IS NOT TO SCALE

DATE	JULY 31, 2019
DRAWN BY	J SAKHALKAR
DESIGNED BY	J SAKHALKAR
CHECKED BY	-
APPROVED BY	-

60% DESIGN
NOT FOR CONSTRUCTION

This document is an interim document and not suitable for construction. As an interim document, it may contain data that is potentially inaccurate or incomplete and is not to be relied upon without the express written consent of the preparer.

Stantec

LYNN WATER & SEWER COMMISSION

LYNN WATER AND SEWER COMMISSION

PHASE 3 WEST LYNN SEWER SEPARATION

STRUCTURAL - PUMP STATION
SECTION AND DETAILS - I

SHEET
S-05

195130174

GENERAL SHEET NOTES

1. CONTRACTOR TO CONFIRM AND COORDINATE SIZE AND LOCATION OF EQUIPMENT AND PIPING WITH CIVIL AND MECHANICAL DRAWINGS.
2. REFER TO MECHANICAL DRAWINGS FOR LOCATION AND SIZE OF OPENINGS AND PENETRATIONS.
3. GRID LINES ARE TO THE OUTSIDE FACE OF EXTERIOR CONCRETE WALLS AND CENTER LINES OF PILES UNO.

SHEET KEYNOTES

A. CJ NOT CONTINUOUS IN BAFFLE WALL.

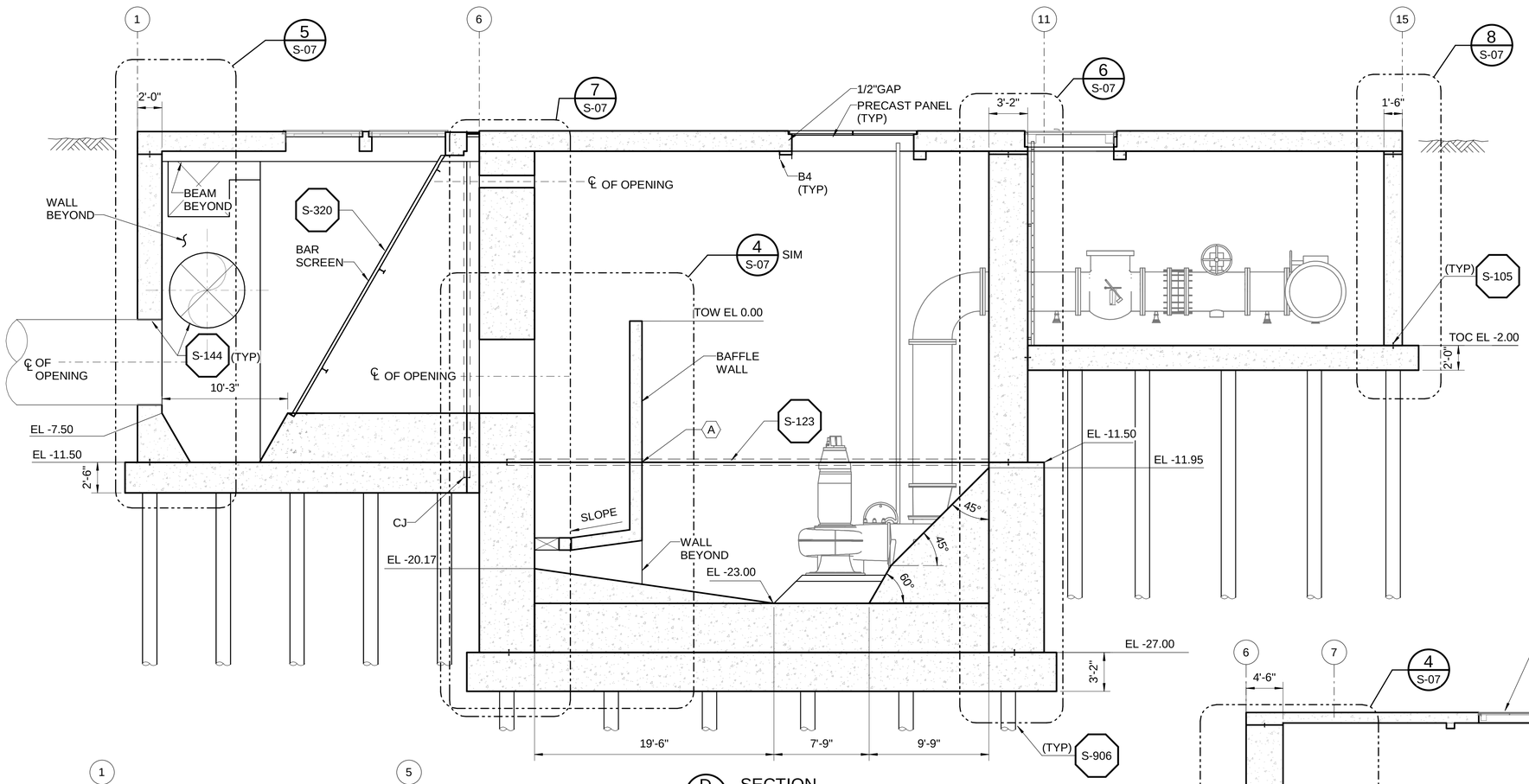

D S-02 SECTION
SCALE: 3/16" = 1'-0"
S-03
S-04

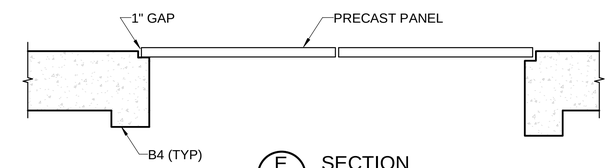

E S-04 SECTION
SCALE: 1/2" = 1'-0"

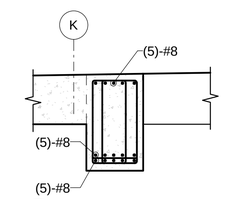

3 S-05 DETAIL
SCALE: 1/2" = 1'-0"

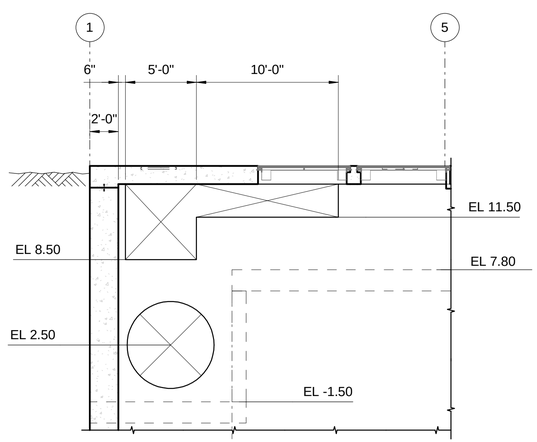

H S-03 SECTION
SCALE: 3/16" = 1'-0"
S-04

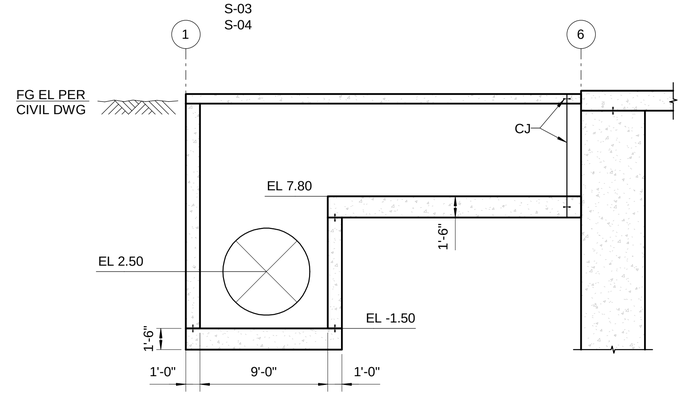

G S-04 SECTION
SCALE: 3/16" = 1'-0"

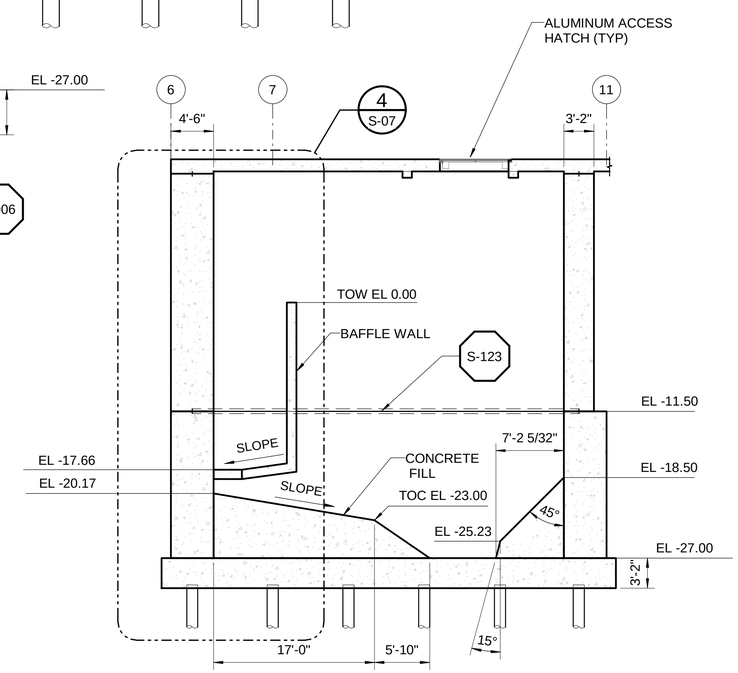

F S-02 SECTION
SCALE: 1/8" = 1'-0"
S-03
S-04

0 2 4
SCALE: 1/2" = 1'-0"

0 8 16
SCALE: 1/8" = 1'-0"

0 4 8 12
SCALE: 3/16" = 1'-0"

REV	DATE	BY	DESCRIPTION

SCALE: AS SHOWN

WARNING: 0 ½ 1 — IF THIS BAR DOES NOT MEASURE 1" THEN DRAWING IS NOT TO SCALE

DATE	JULY 31, 2019
DRAWN BY	J SAKHALKAR
DESIGNED BY	J SAKHALKAR
CHECKED BY	-
APPROVED BY	-

60% DESIGN
NOT FOR CONSTRUCTION

This document is an interim document and not suitable for construction. As an interim document, it may contain data that is potentially inaccurate or incomplete and is not to be relied upon without the express written consent of the preparer.

Stantec

LYNN WATER & SEWER COMMISSION

LYNN WATER AND SEWER COMMISSION

PHASE 3 WEST LYNN SEWER SEPARATION

STRUCTURAL - PUMP STATION
SECTION AND DETAILS - II

SHEET S-06

195130174

BY : J SAKHALKAR

PLOT DATE: 7/26/2019 5:23:48 PM

B:\0537429\Lynn_Structural_Model.rvt

GENERAL SHEET NOTES

1. CONTRACTOR TO CONFIRM AND COORDINATE SIZE AND LOCATION OF EQUIPMENT AND PIPING WITH CIVIL AND MECHANICAL DRAWINGS.
2. REFER TO MECHANICAL DRAWINGS FOR LOCATION AND SIZE OF OPENINGS AND PENETRATIONS.
3. GRID LINES ARE TO THE OUTSIDE FACE OF EXTERIOR CONCRETE WALLS AND CENTER LINES OF PILES UNO.

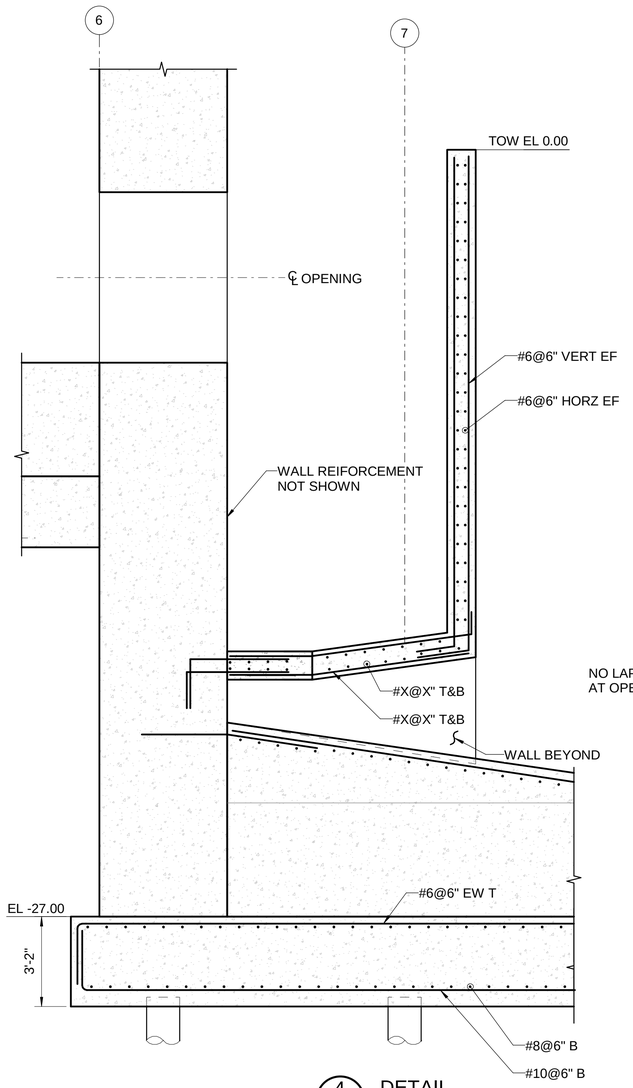

4 S-06 DETAIL

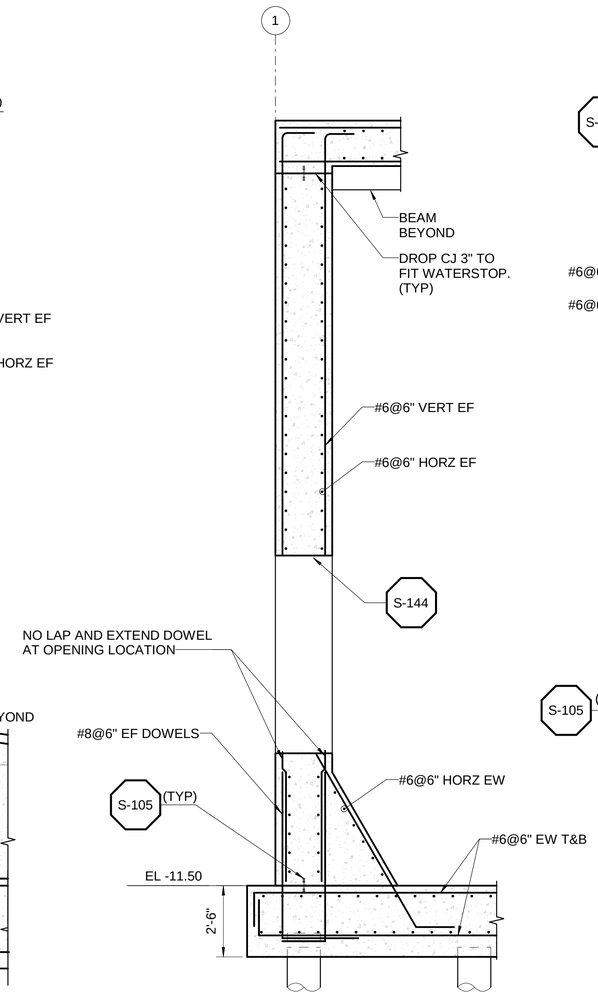

5 S-06 DETAIL

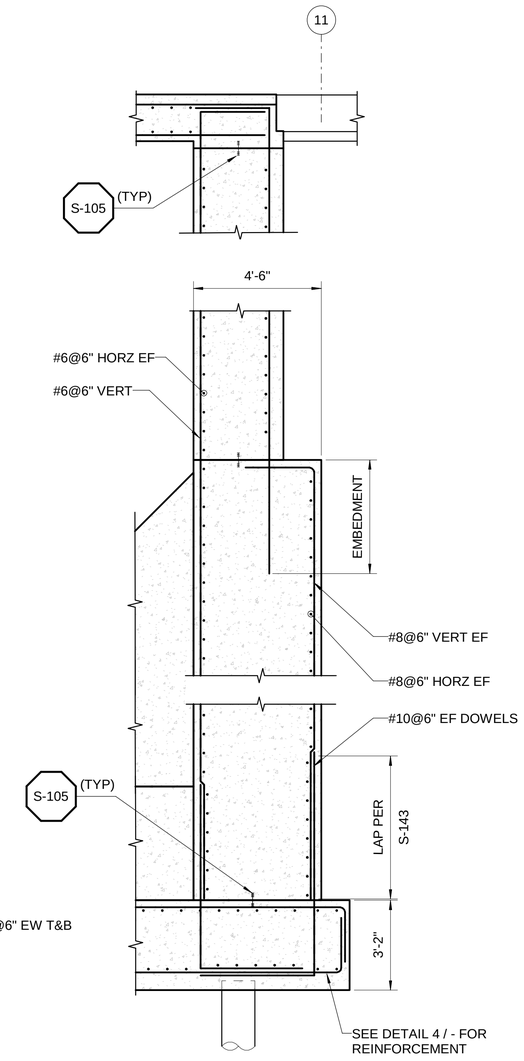

6 S-06 DETAIL

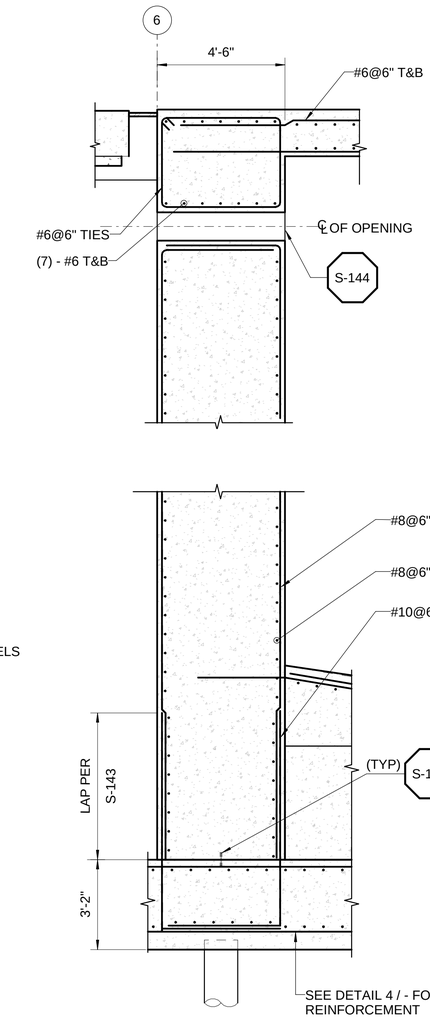

7 S-06 DETAIL

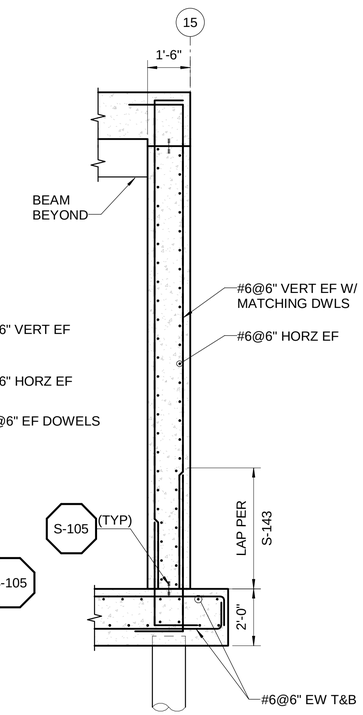

8 S-06 DETAIL

0 1 2 3 4 5
SCALE: 3/8" = 1'-0"

BY : J SAKHALKAR

PLOT DATE: 7/26/2019 5:23:49 PM

B:\d0537429\Lynn_Structural_Model.rvt

REV	DATE	BY	DESCRIPTION

SCALE 3/8" = 1'-0"

WARNING 0 ½ 1 IF THIS BAR DOES NOT MEASURE 1" THEN DRAWING IS NOT TO SCALE

DATE	JULY 31, 2019
DRAWN BY	J SAKHALKAR
DESIGNED BY	J SAKHALKAR
CHECKED BY	-
APPROVED BY	-

60% DESIGN
NOT FOR CONSTRUCTION
This document is an interim document and not suitable for construction. As an interim document, it may contain data that is potentially inaccurate or incomplete and is not to be relied upon without the express written consent of the preparer.

Stantec

LYNN WATER & SEWER COMMISSION

LYNN WATER AND SEWER COMMISSION

PHASE 3 WEST LYNN SEWER SEPARATION

STRUCTURAL - PUMP STATION
SECTION AND DETAILS - III

SHEET S-07

195130174

GENERAL SHEET NOTES

1. REFER TO ELECTRICAL DRAWINGS FOR LOCATION AND SIZE OF OPENINGS AND PENETRATIONS.
2. GRID LINES ARE TO THE CENTERLINE OF INTERNAL COLUMNS, PILES AND AT EXTERNAL FACE OF EXTERIOR COLUMNS UNO.

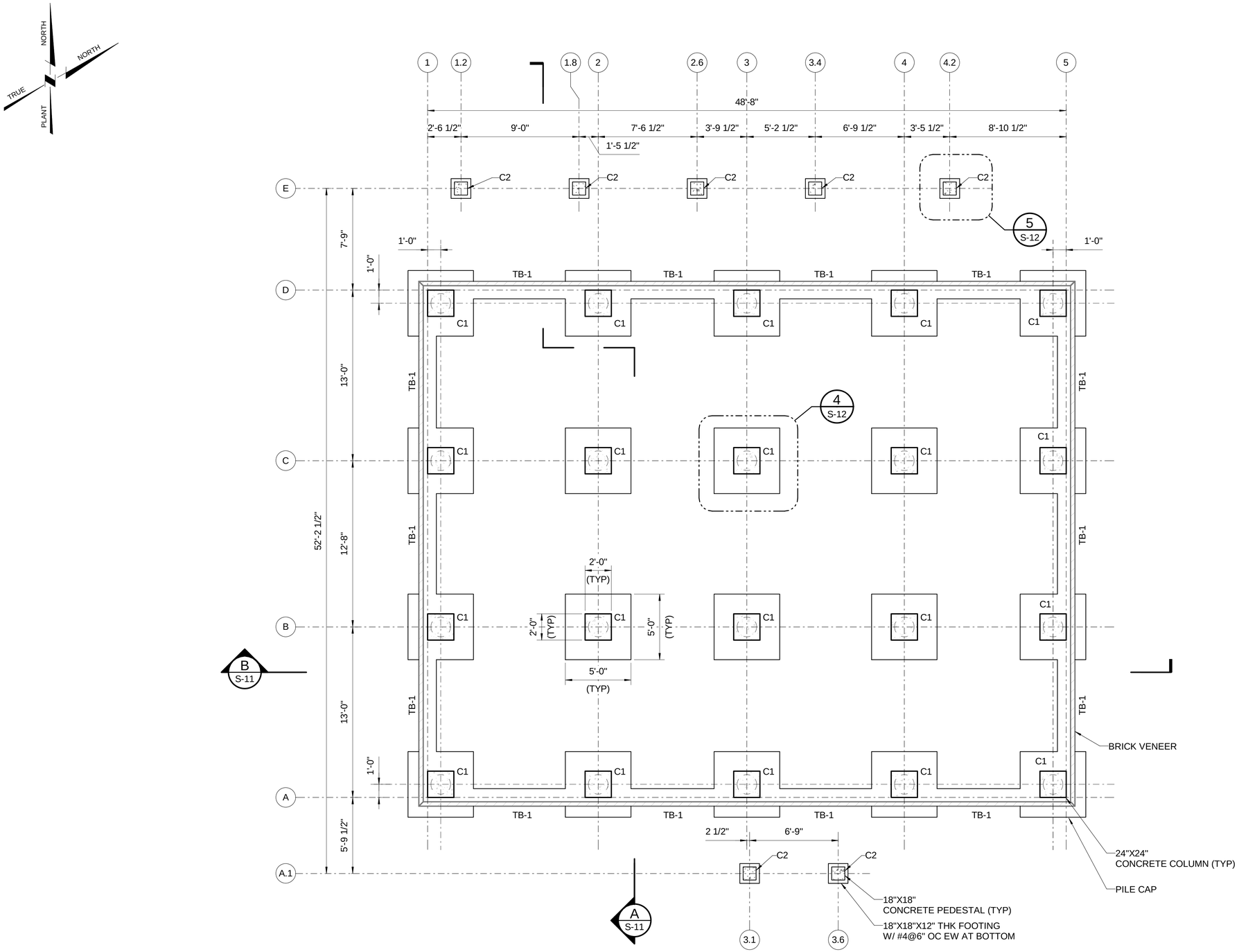

0 4 8
SCALE: 1/4" = 1'-0"

BY : G MAGDUM

PLOT DATE: 26-Jul-19 4:46:27 PM

B:\0537429\Lynn_Structural_Electrical_Building_Model.rvt

REV	DATE	BY	DESCRIPTION

SCALE: 1/4" = 1'-0"

WARNING: 0 ½ 1 — IF THIS BAR DOES NOT MEASURE 1" THEN DRAWING IS NOT TO SCALE

DATE	JULY 31, 2019
DRAWN BY	G MAGDUM
DESIGNED BY	M JAISWAL
CHECKED BY	-
APPROVED BY	-

60% DESIGN
NOT FOR CONSTRUCTION

This document is an interim document and not suitable for construction. As an interim document, it may contain data that is potentially inaccurate or incomplete and is not to be relied upon without the express written consent of the preparer.

Stantec

LYNN WATER & SEWER COMMISSION

LYNN WATER AND SEWER COMMISSION

PHASE 3 WEST LYNN SEWER SEPARATION

STRUCTURAL - ELECTRICAL BUILDING FOUNDATION PLAN

SHEET S-08

195130174

GENERAL SHEET NOTES

1. REFER TO ELECTRICAL DRAWINGS FOR LOCATION AND SIZE OF OPENINGS AND PENETRATIONS.
2. GRID LINES ARE TO THE CENTERLINE OF INTERNAL COLUMNS, PILES AND AT EXTERNAL FACE OF EXTERIOR COLUMNS UNO.

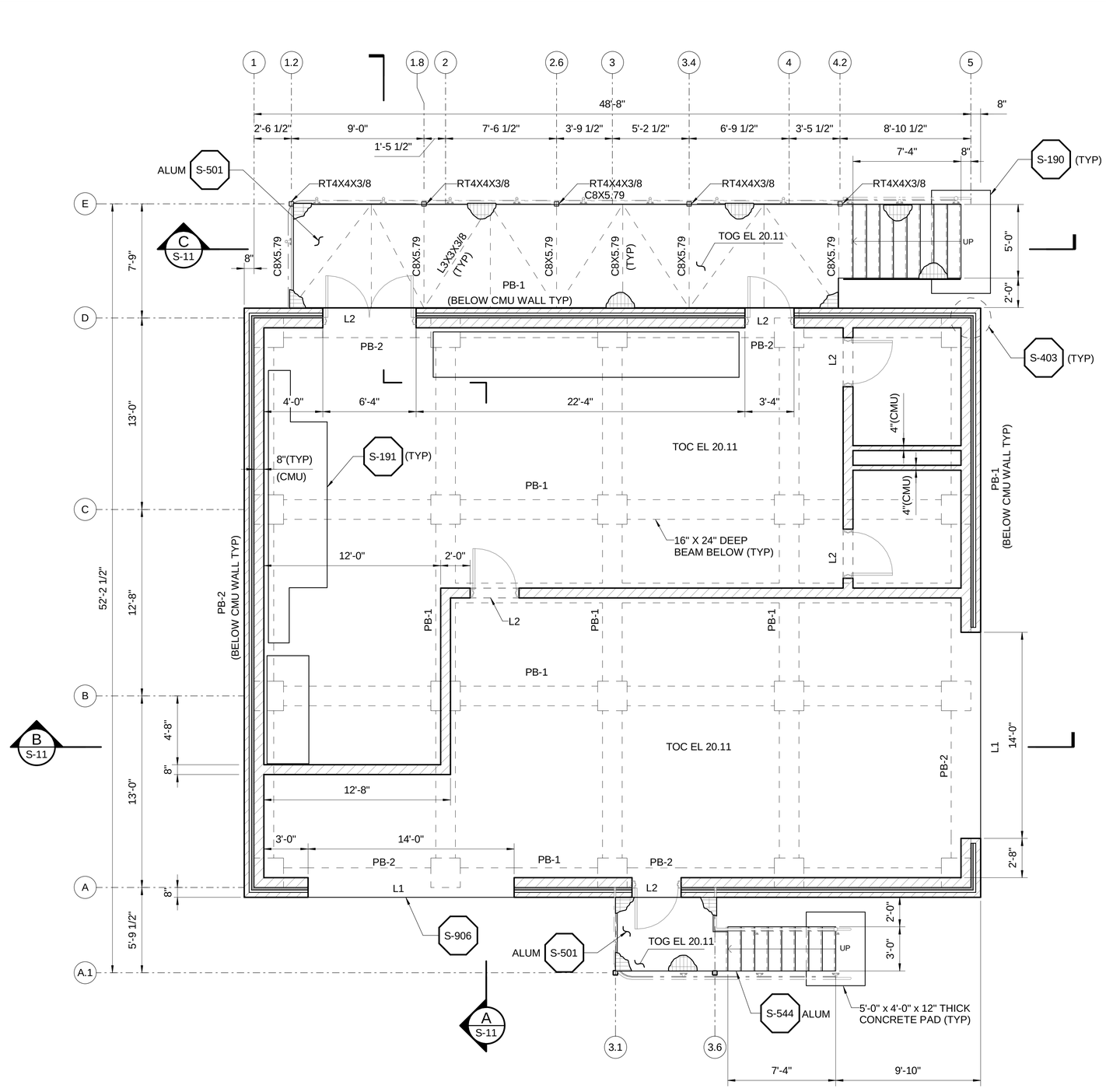

SCALE: 1/4" = 1'-0"

REV	DATE	BY	DESCRIPTION

SCALE: 1/4" = 1'-0"

WARNING: 0 ½ 1 — IF THIS BAR DOES NOT MEASURE 1" THEN DRAWING IS NOT TO SCALE

DATE	JULY 31, 2019
DRAWN BY	G MAGDUM
DESIGNED BY	M JAISWAL
CHECKED BY	-
APPROVED BY	-

60% DESIGN
NOT FOR CONSTRUCTION

This document is an interim document and not suitable for construction. As an interim document, it may contain data that is potentially inaccurate or incomplete and is not to be relied upon without the express written consent of the preparer.

Stantec

LYNN WATER & SEWER COMMISSION

LYNN WATER AND SEWER COMMISSION

PHASE 3 WEST LYNN SEWER SEPARATION

STRUCTURAL - ELECTRICAL BUILDING PLAN AT GROUND LEVEL

SHEET S-09

195130174

BY : G MAGDUM

PLOT DATE: 26-Jul-19 4:46:27 PM

B:\0537429\Lynn_Structural_Electrical_Building_Model.rvt

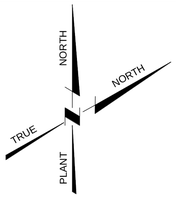

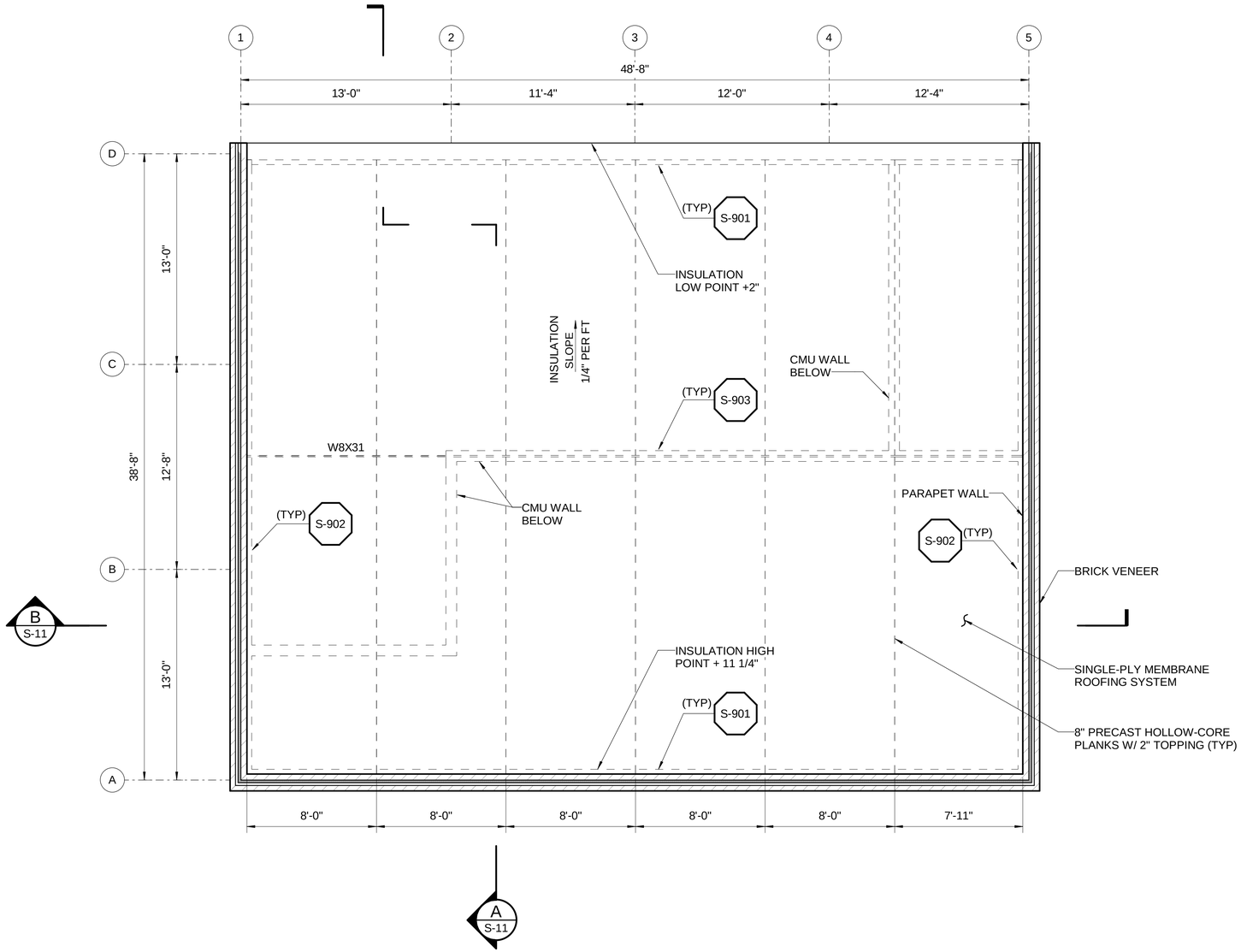

0 4 8
SCALE: 1/4" = 1'-0"

BY : G MAGDUM

PLOT DATE: 26-Jul-19 4:46:28 PM

B:\0537429\Lynn_Structural_Electrical_Building_Model.rvt

REV	DATE	BY	DESCRIPTION

SCALE: 1/4" = 1'-0"

WARNING: 0 ½ 1 — IF THIS BAR DOES NOT MEASURE 1" THEN DRAWING IS NOT TO SCALE

DATE	JULY 31, 2019
DRAWN BY	G MAGDUM
DESIGNED BY	M JAISWAL
CHECKED BY	-
APPROVED BY	-

60% DESIGN
NOT FOR CONSTRUCTION

This document is an interim document and not suitable for construction. As an interim document, it may contain data that is potentially inaccurate or incomplete and is not to be relied upon without the express written consent of the preparer.

Stantec

LYNN WATER & SEWER COMMISSION

LYNN WATER AND SEWER COMMISSION

PHASE 3 WEST LYNN SEWER SEPARATION

STRUCTURAL - ELECTRICAL BUILDING
ROOF PLAN

SHEET
S-10

195130174

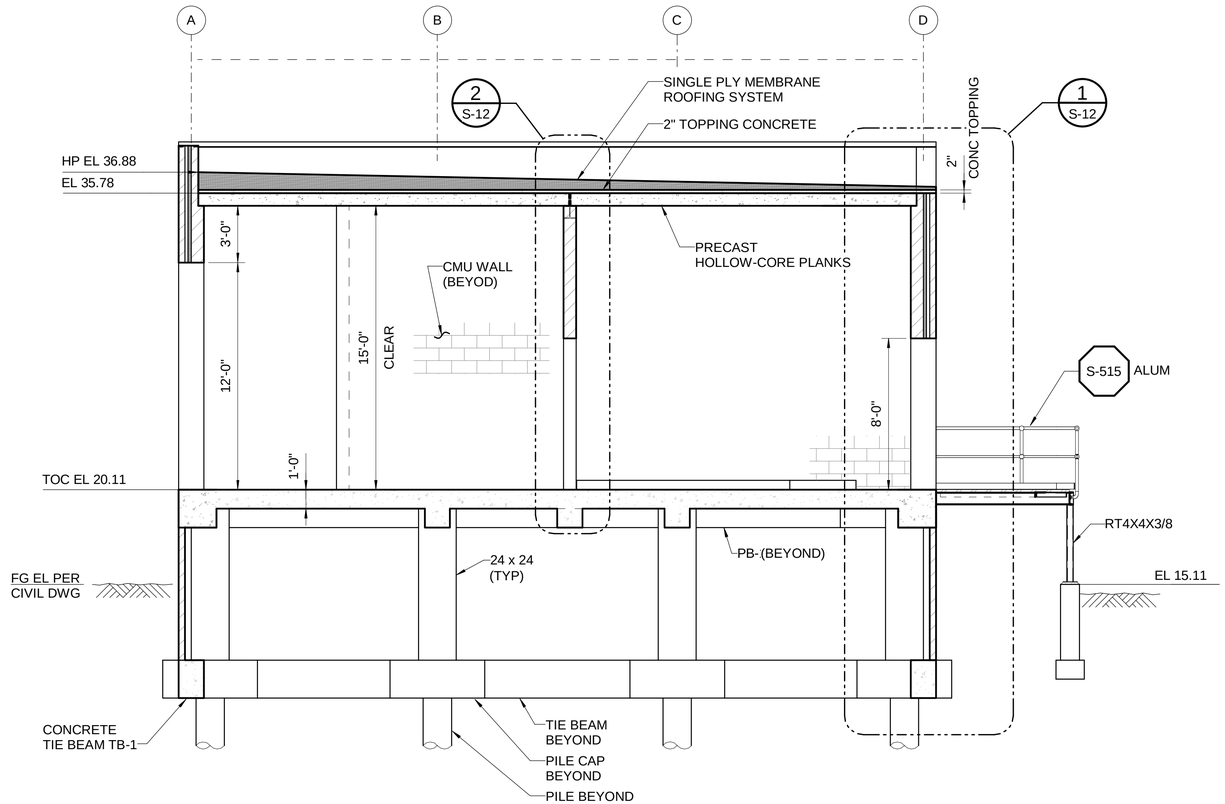

A SECTION
S-08

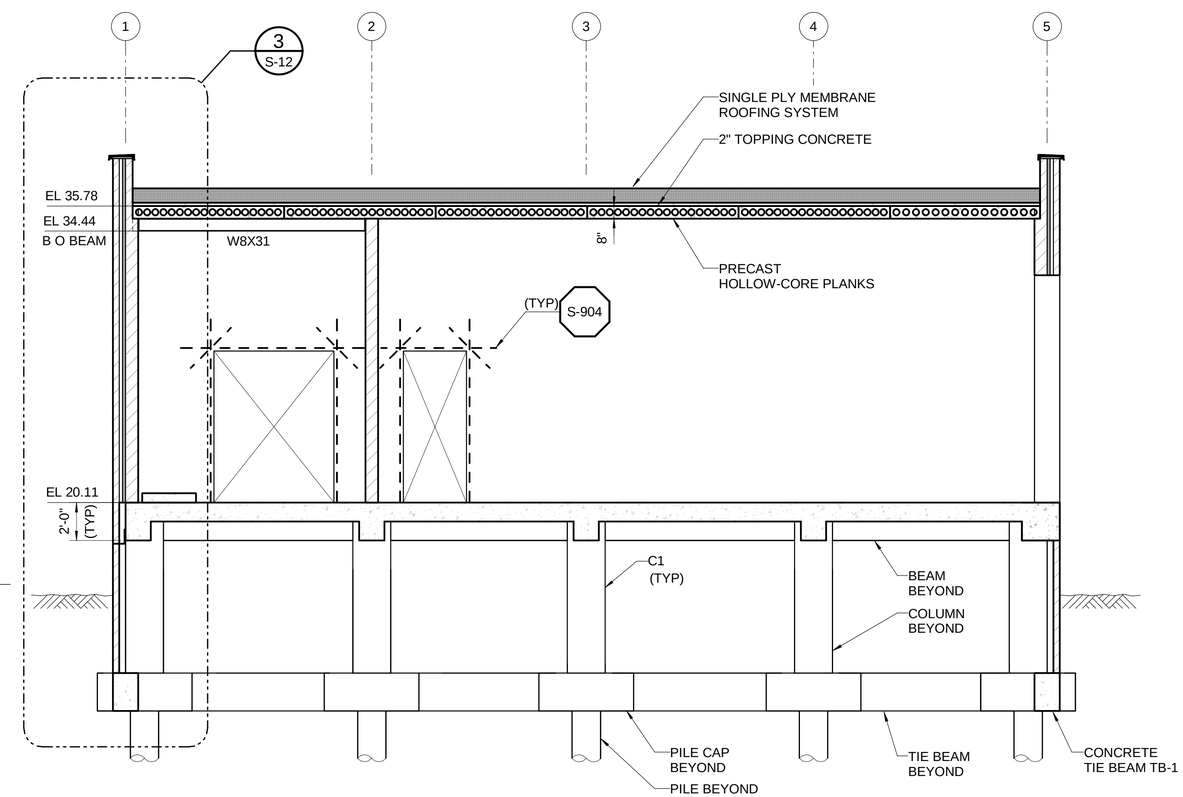

B SECTION
S-08

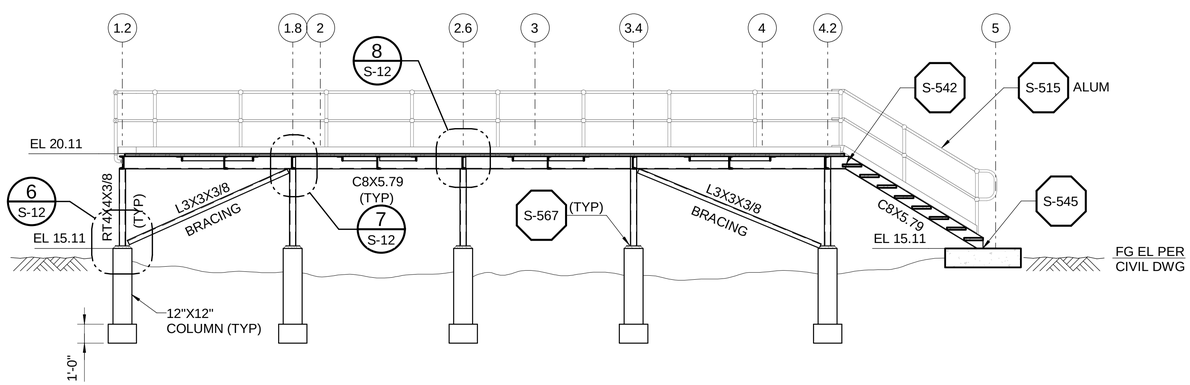

C SECTION
S-09

0 4 8
SCALE: 1/4" = 1'-0"

REV	DATE	BY	DESCRIPTION

SCALE: 1/4" - 1'-0"

WARNING: 0 ½ 1 — IF THIS BAR DOES NOT MEASURE 1" THEN DRAWING IS NOT TO SCALE

DATE: JULY 31, 2019
DRAWN BY: G MAGDUM
DESIGNED BY: M JAISWAL
CHECKED BY: -
APPROVED BY: -

60% DESIGN
NOT FOR CONSTRUCTION

This document is an interim document and not suitable for construction. As an interim document, it may contain data that is potentially inaccurate or incomplete and is not to be relied upon without the express written consent of the preparer.

Stantec

LYNN WATER & SEWER COMMISSION

LYNN WATER AND SEWER COMMISSION

PHASE 3 WEST LYNN SEWER SEPARATION

STRUCTURAL - ELECTRICAL BUILDING SECTIONS

SHEET
S-11

195130174

PLOT DATE: 26-Jul-19 4:46:28 PM
BY : G MAGDUM
B:\00537429\Lynn_Structural_Electrical_Building_Model.rvt

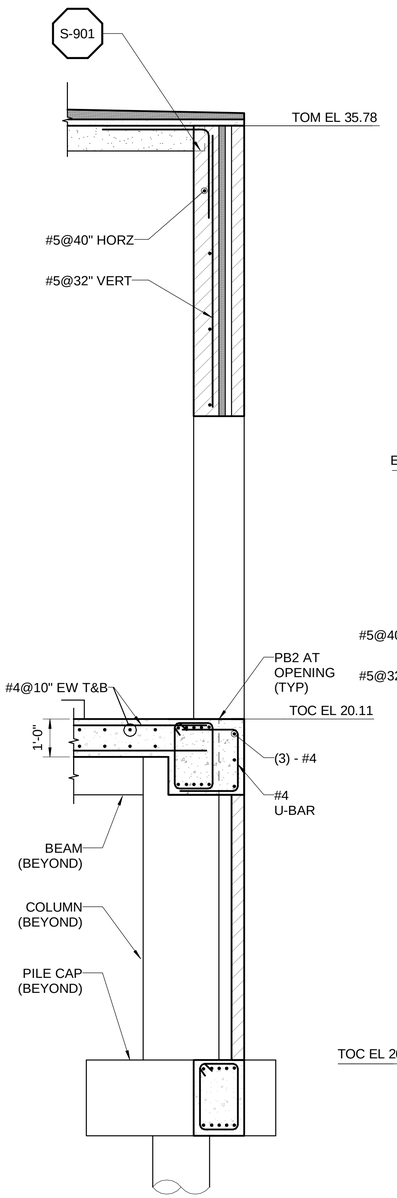

1 S-11 DETAIL

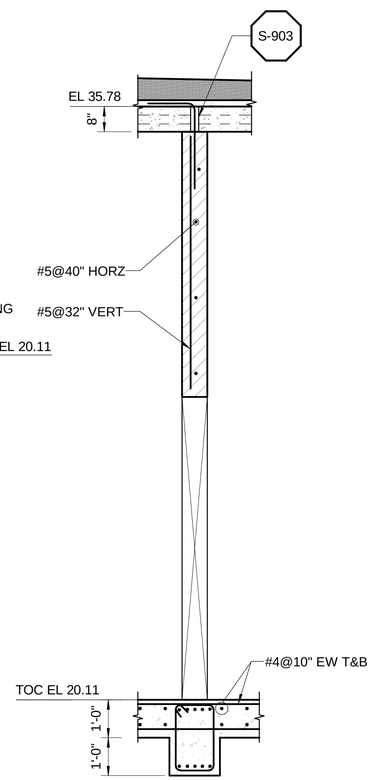

2 S-11 DETAIL

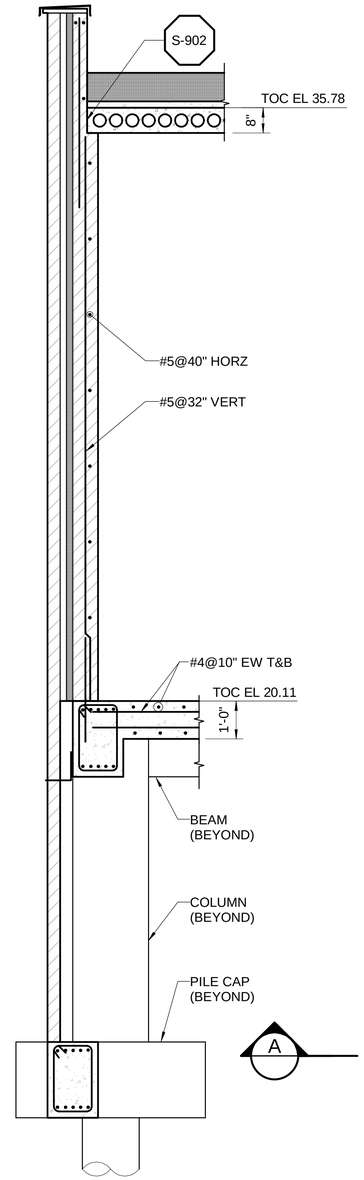

3 S-11 DETAIL

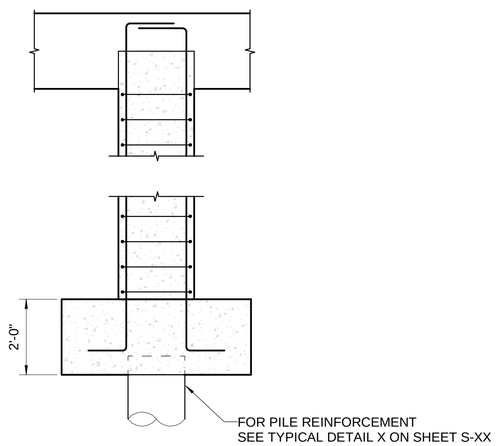

A - SECTION

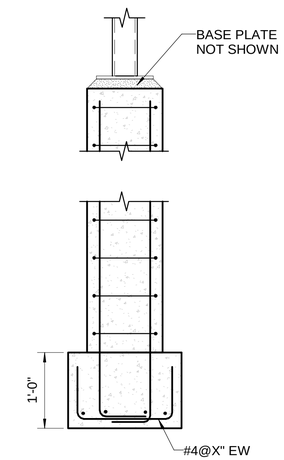

B - SECTION
SCALE: 1" = 1'-0"

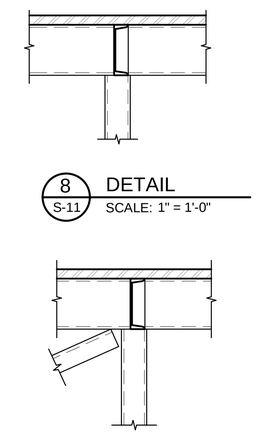

8 S-11 DETAIL
SCALE: 1" = 1'-0"

7 S-11 DETAIL
SCALE: 1" = 1'-0"

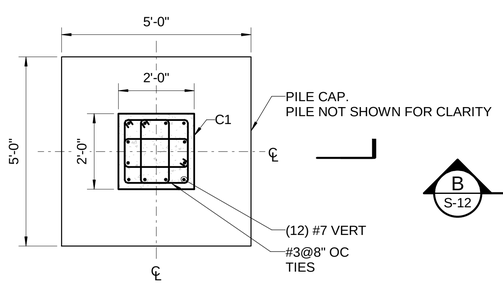

4 S-08 DETAIL

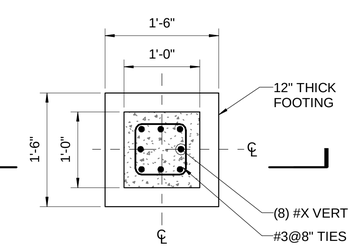

5 S-08 DETAIL
SCALE: 1" = 1'-0"

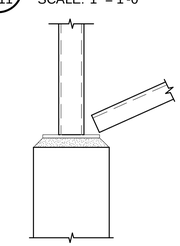

6 S-11 DETAIL
SCALE: 1" = 1'-0"

0 2 4
SCALE: 1/2" = 1'-0"

REV	DATE	BY	DESCRIPTION

SCALE 1/2" = 1'-0"

WARNING
0 ½ 1
IF THIS BAR DOES NOT MEASURE 1" THEN DRAWING IS NOT TO SCALE

DATE JULY 31, 2019
DRAWN BY G MAGDUM
DESIGNED BY M JAISWAL
CHECKED BY -
APPROVED BY -

60% DESIGN
NOT FOR CONSTRUCTION
This document is an interim document and not suitable for construction. As an interim document, it may contain data that is potentially inaccurate or incomplete and is not to be relied upon without the express written consent of the preparer.

Stantec

LYNN WATER & SEWER COMMISSION

LYNN WATER AND SEWER COMMISSION
PHASE 3 WEST LYNN SEWER SEPARATION
STRUCTURAL - ELECTRICAL BUILDING
DETAILS - I

SHEET
S-12

195130174

BY : G MAGDUM
PLOT DATE: 26-Jul-19 4:46:30 PM
B:\0537429\Lynn_Structural_Electrical Building_Model.rvt

PARTITION PLAN NOTES

1. EACH BIDDER SHALL VISIT THE SITE AND EXAMINE THE SITE TO ENSURE THEIR KNOWLEDGE OF THE CONDITIONS AFFECTING THE WORK. WORK INSTALLED PER PREVIOUS PHASES SHOWN AS EXISTING ARE TO REMAIN U.O.N.
2. FOR EXACT LOCATION OF FLOOR & ROOF OPENINGS SHOWN ON STRUCTURAL DRAWINGS, SEE ARCHITECTURAL, MECHANICAL, ELECTRICAL AND SHOP DRAWINGS.
3. PLAN SPOT ELEVATIONS REFER TO TOP OF FINISH UON. REFER TO STRUCTURAL DRAWINGS FOR TOP OF STRUCTURE
4. DETAILS AND SECTIONS ON THE DRAWINGS ARE SHOWN AT SPECIFIC LOCATIONS. DETAILS NOTED "TYPICAL" OR "TYP" IMPLY THE SAME CONDITION IS REPEATED AT OTHER LOCATIONS. DETAILS NOTED "SIMILAR" OR "SIM" IMPLY THE CONDITION IS TREATED SIMILARLY IN OTHER LOCATIONS BUT WITH SLIGHT MODIFICATIONS TO BE MADE BY CONTRACTOR TO ACCOMMODATE MINOR VARIATIONS.
5. MATERIALS AND PRODUCTS CALLED OUT TO BE INSTALLED ON THE DRAWINGS ARE TO BE NEW UON ARCHITECT WILL PROVIDE SCHEDULE OF SALVAGED ITEMS, IF ANY, THAT ARE TO BE RE-USED ON THIS PROJECT.
6. SIDES OF DOOR OPENINGS TO BE A MINIMUM OF 6" FROM NEAREST PERPENDICULAR PARTITION, UON.
7. REVIEW LAYOUTS FOR PARTITIONS IN FIELD WITH THE ARCHITECT/DESIGNER PRIOR TO START OF CONSTRUCTION.
8. DOOR NUMBERS TO CORRESPOND TO ROOM NUMBERS, UON.
9. DIMENSIONS:
   A. DIMENSIONS ARE TO FINISHED FACE OF PARTITION UON
   B. DRAWINGS ARE NOT TO BE SCALED. VERIFY ANY MISSING OR CONFLICTING WRITTEN DIMENSIONS WITH THE ARCHITECT/DESIGNER PRIOR TO CONSTRUCTION.
   C. NOTIFY ARCHITECT/DESIGNER OF CONDITIONS WHERE CLEAR OR CRITICAL DIMENSIONS ARE DESIGNATED BUT CANNOT BE MET.
   D. MAINTAIN FINISH FLOOR BASE ELEVATION THROUGHOUT THE CONTRACT AREA SUCH THAT DIMENSIONS INDICATED AS ABOVE FINISH FLOOR ARE AT THE SAME ELEVATION.
10. PROVIDE FIRE EXTINGUISHERS IN QUANTITIES AND LOCATIONS ON DWGS, BUT IN NO CASE LESS THAN AMOUNT REQUIRED BY CODE. REVIEW FINAL LOCATIONS WITH THE ARCHITECT/DESIGNER PRIOR TO START OF CONSTRUCTION.
11. SEE SHEET A0.012 FOR PARTITION TYPES.

PLAN LEGEND

- NEW PARTITION
- WINDOW WALL
- WINDOW OR LOUVER
- RECESSED ITEM
- 1 HOUR RESISTIVE RATED CONSTRUCTION
- 2 HOUR RESISTIVE RATED CONSTRUCTION
- NEW DOOR
- NEW DOUBLE DOOR
- NEW OVERHEAD ROLLING DOOR

TYPICAL MOUNTING LOCATIONS

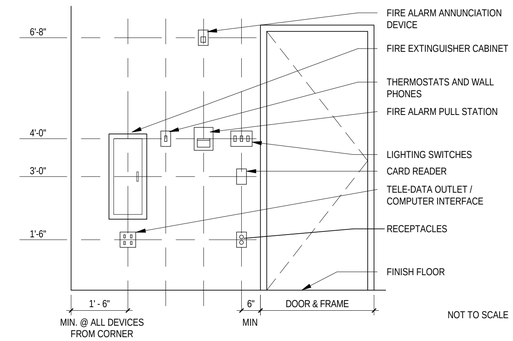

1. INSTALL DEVICES AS INDICATED ABOVE UON.
2. MEASURE MOUNTING HEIGHTS FROM CENTERLINE OF DEVICE TO FINISH FLOOR UON.
3. INSTALL DEVICES ON A COMMON VERTICAL CENTERLINE WHEREVER POSSIBLE.
4. DIMENSIONS AT LOAD CENTER ARE TO EDGE OF DOOR.

GENERAL LEGEND

ROOM KEY:
- ROOM NAME 101 — ROOM NAME / ROOM NUMBER

AREA KEY:
- AREA NAME 150 SF — AREA NAME / AREA

DETAIL KEY:
- 1 A-801 — DETAIL NUMBER / DRAWING NUMBER

- ELEV 25'-0" — SPOT ELEVATION KEY
- ⁄1 A-521 — WALL SECTION KEY
- ⁄1 A-321 ⁄1 A-321 — BUILDING SECTION KEY
- ALIGN KEY
- 1 A-131 — ENLARGED PLAN KEY
- ⁄1 A-301 — EXTERIOR ELEVATION KEY
- LIMIT OF WORK
- 1 A-801 — INTERIOR ELEVATION KEY - SINGLE
- 1 1/4" — DIMENSION LINE
- 1 4 A-802 2 3 — INTERIOR ELEVATION KEY - MULTIPLE
- A 1 — COLUMN LINE INDICATORS
- ⁄1 — REVISION KEY
- FD — FLOOR DRAIN
- 1 — LOUVER TYPE
- 1A — PARTITION TYPE
- RD — ROOF DRAIN
- FE — FIRE EXTINGUISHER W/O CABINET
- BVS-1 A-401 — EXTERIOR ASSEMBLY TYPE
- 101 — DOOR NUMBER
- NOT IN CONTRACT (NIC) SHADING
- S — SEALANT
- S — SEALANT & BACKER ROD

ABBREVIATIONS

& - And
< - Angle
@ - At
℄ - Center Line
Ø - Diameter
- Pound
± - Tolerance Dimension

A/E - Architect / Engineer
AB - Anchor Bolt
AC - Air Conditioning
ACBL - Accessible (ADA Compliant)
ACOUS - Acoustical
ACT - Acoustic Ceiling Tile
AD - Access Door
ADA - The Americans with Disabilities Act
ADBL - Adaptable (ADA Compliant)
ADDL - Additional
ADH - Adhesive
ADJ - Adjustable
ADJC - Adjacent
AF - Access Floor
AFF - Above Finished Floor
AGGR - Aggregate
AH - Air Handler
AL - Aluminum
ALT - Alternate
ANOD - Anodized
AP - Access Panel
APPROX - Approximately
ARCH - Architect
ASC - Above Suspended Ceiling
ASPH - Asphalt
ASSY - Assembly
AVB - Air Vapor Barrier

BD - Board
BETW - Between
BLDG - Building
BLKG - Blocking
BM - Beam
BO - By Others
BOT - Bottom
BR - Brass
BRZ - Bronze

CAB - Cabinet
CB - Casing Bead
CEM - Cement
CEMTS - Cementitious
CER - Ceramic
CG - Corner Guard
CHAN - Channel
CHBD - Chalkboard
CHFR - Chamfer
CHR - Chrome
CI - Cast Iron
CJ - Construction Joint
CK - Cork
CLG - Ceiling
CLG - Control Joint
CLO - Closet
CLR - Clear
CLRM - Classroom
CMPST - Composite
CMU - Concrete Masonry Unit
CNTR - Counter
CO - Cased Opening
COL - Column
COMP - Compressible
CONC - Concrete
CONN - Connection
CONSTR - Construction
CONT - Continuous
CONTR - Contractor
COORD - Coordinate
COPP - Copper
CPRS - Compressible or Compression
CPT - Carpet
CORR - Corridor
CRS - Cold Rolled Steel
CS - Cast Stone
CSK - Countersunk
CSMT - Casement
CSWK - Casework
CT - Ceramic Tile
CYL - Cylinder

DBL - Double
DEMO - Demolition
DEPT - Department
DF - Drinking Fountain
DIA - Diameter
DIM - Dimension
DISP - Disperser
DIV - Division
DLO - Day Light Opening
DMPF - Dampproofing
DN - Down
DO - Ditto
DOP - Door Opening
DR - Door
DS - Downspout
DSP - Dry Standpipe
DST - Door Stop
DTL - Detail
DWG - Drawing
DWR - Drawer

E - East
EA - Each
EB - Expansion Bolt
EIFS - Exterior Insulation Finish System
EJ - Expansion Joint
EL - Elevation
ELAST - Elastomeric
ELEC - Electrical
ELEV - Elevator
EMER - Emergency
ENCL - Enclosure
ENGR - Engineer
ENTR - Entrance
EP - Electrical Panel
EPDM - Ethylene Propylene Diene Monomer
EPRF - Explosion Proof
EQ - Equal
EQUIP - Equipment
ESCAL - Escalator
ESMT - Easement
EST - Engineered Stone
ETR - Existing to Remain
EW - Each Way
EWC - Electric Water Cooler
EX / EXIST - Existing
EXC - Excavate
EXH - Exhaust
EXP - Expansion
EXT - Exterior

F/F - Face to Face
FA - Fire Alarm
FACP - Fire Alarm Control Panel
FB - Flat Bar
FCO - Floor Clean Out
FD - Floor Drain
FDC - Fire Department Connection
FDN - Foundation
FE - Fire Extinguisher
FEC - Fire Extinguisher Cabinet
FF - Fabric Flashing
FGL - Fiberglass
FHC - Fire Hose Cabinet
FHP - Full Height Partition
FHY - Fire Hydrant
FIN - Finish
FL - Flashing
FLG - Flange
FLR - Floor
FLUOR - Fluorescent
FO - Face of
FOC - Face of Concrete
FOF - Face of Finish
FOM - Face of Masonry
FOS - Face of Stud
FPRF - Fireproofing
FR - Fire Resistant
FRT - Fire Retardant Treated
FS - Full Size
FSH - Fire Sprinkler Head
FSTP - Firestopping
FT - Foot or Feet
FTG - Footing
FTR - Fin Tube Radiation
FURN - Furniture
FURR - Furring
FUT - Future
FWC - Fabric Wall Covering

G - Gas
GA - Gauge
GALV - Galvanized
GB - Grab Bar
GC - General Contractor
GEN - Generator
GFRC - Glass Fiber Reinforced Concrete
GFRG - Glass Fiber Reinforced Gypsum
GL - Glass
GLMU - Glass Masonry Unit
GMMU - Glass Mesh Mortar Unit
GND - Ground
GR - Grade
GRL - Grille
GRTG - Grating
GSKT - Gasket
GT - Grout
GVL - Gravel
GWB - Gypsum Wall Board

HB - Hose Bibb
HC - Hollow Core
HDBD - Hardboard
HDWD - Hardwood
HDW - Hardware
HGR - Hanger
HT - Height
HM - Hollow Metal
HMD - Hollow Metal Door
HNDRL - Handrail
HO - Hold Open
HORIZ - Horizontal
HP - High Point
HVAC - Heat, Ventilation & Air Conditioning

ID - Inside Diameter
IF - Inside Face
IN - Inch or Inches
INSUL - Insulation
INT - Interior
IWH - Instantaneous Water Heater

JAN - Janitor
JST - Joist
JT - Joint

KD - Knocked Down
KIT - Kitchen
KO - Knockout
KOP - Knockout Panel
KPL - Kickplate

L - Length or Left
LAB - Laboratory
LAD - Ladder
LAM - Laminate
LAV - Lavatory
LB - Pound
LBL - Label
LF - Linear Foot or Feet
LH - Left Hand
LHR - Left Hand Reverse
LIB - Library
LIN - Linear
LKR - Locker
LNM - Linoleum
LNTL - Lintel
LONG - Longitudinal
LP - Low Point
LT - Light
LTG - Lighting
LTWT - Lightweight
LVR - Louver

MACH - Machine
MAINT - Maintenance
MAS - Masonry
MATL - Material
MAX - Maximum
MDF - Medium Density Fiberboard
MDO - Medium Density Overlay
MECH - Mechanical
MED - Medium
MEL - Melamine
MEMB - Membrane
MEZZ - Mezzanine
MF - Metal Flashing
MFR - Manufacturer
MH - Manhole
MIN - Minimum
MIR - Mirror
MISC - Miscellaneous
MKBD - Markerboard
ML - Metal Lath
MLDG - Molding
MLWK - Millwork
MO - Masonry Opening
MTD - Mounted
MTR - Mortar
MTL - Metal
MULL - Mullion
MVBL - Movable

N - North
NA - Not Applicable
NAT - Natural
NIC - Not In Contract
NO - Number
NOM - Nominal
NTS - Not To Scale

OA - Overall
OC - On Center
OD - Outside Diameter
OF - Outside Face
OFCI - Owner Furnished/Contractor Installed
OFF - Office
OH - Overhead
OPNG - Opening
OPP - Opposite
P&S - Power & Signal
PAR - Parallel
PB - Particle Board
PC - Precast
PERF - Perforated
PERIM - Perimeter
PERP - Perpendicular
PL - Plate
PLAM - Plastic Laminate
PLAS - Plaster
PLBG - Plumbing
PLYWD - Plywood
PM - Pressed Metal
PNEU - Pneumatic
PNL - Panel
POL - Polished
POLY - Polyethelene
PR - Pair
PRCST - Precast
PREFAB - Prefabricated
PREFIN - Prefinished
PT - Pressure Treated
PTD - Painted
PTN - Partition
PVC - Polyvinyl Chloride
PVG - Paving

QT - Quarry Tile
QTY - Quantity
QUAL - Quality

R - Radius or (Stair) Risers
RAD - Radiator
RBR - Rubber
RCP - Reflected Ceiling Plan
RD - Roof Drain
REC - Recessed
REF - Reference
REFR - Refrigerator
REG - Register
REINF - Reinforced or Reinforcing
REM - Removable
REQD - Required
REQMTS - Requirements
RESIL - Resilient
RF - Resilient Flooring
RFG - Roofing
RH - Right Hand
RHR - Right Hand Reverse
RLG - Railing
RM - Room
RO - Rough Opening
RV - Roof Vent
RWL - Rain Water Leader

S - South
SC - Solid Core
SAFB - Sound Attenuation Fiber Batts
SCHED - Schedule
SCR - Screw
SCRN - Screen
SDT - Static Dissipative Tile
SECT - Section
SF - Square Foot or Feet
SHR - Shower
SHT - Sheet
SHTG - Sheathing
SHV - Shelving
SIM - Similar
SK - Sink
SLV - Sleeve
SM - Sheet Metal
SP - Spray Particle Paint
SPEC - Specifications
SQ - Square
SS - Stainless Steel
SSF - Solid Surface
SSK - Service Sink
ST - Street
STA - Station
STAG - Stagger
STC - Sound Transmission Class
STD - Standard
STG - Storage
STL - Steel
STN - Stone
STR - Structural
SUSP - Suspended
SYM - Symbol
SYMM - Symmetrical
SVF - Sheet Vinyl Flooring
S4S - Surface Four Sides
SYS - System

T - Treads (Stairs)
T&B - Top and Bottom
T&G - Tongue and Groove
TBD - To Be Determined
TBM - Top of Beam
TC - Top of Concrete
TDO - Thermoset Decorative Overlay
TEL - Telephone
TEMP - Temporary
TERR - Terrazzo
TF - Top of Footing
TFF - Top of Finished Floor
THK - Thickness
THRES - Threshold
THRU - Through
TKBD - Tackboard
TMPD - Tempered
T.O. - Top Of
TOC - Top Of Concrete
TOF - Top of Footing
TOL - Tolerance
TOM - Top Of Masonry
TOP - Top of Pavement
TOS - Top Of Steel
TOSL - Top of Slab
TOW - Top Of Wall
TPO - Thermoplastic-Polyolefin Roofing
TRANS - Translucent
TV - Television
TYP - Typical

UL - Underwriters Laboratory
UNEX - Unexcavated
UNFIN - Unfinished
UON - Unless Otherwise Noted
UPS - Uninterruptible Power Supply
UR - Urinal
UV - ULtraviolet

VAC - Vacuum
VB - Vapor Barrier or Vinyl Base
VCT - Vinyl Composition Tile
VER - Verify
VERT - Vertical
VEST - Vestibule
VIF - Contractor to Verify In Field
VNR - Veneer
VR - Vapor Retarder
VWC - Vinyl Wall Covering

W - West
W/ - With
W/O - Without
WC - Water Closet
WD - Wood
WGL - Wired Glass
WLD - Welded
WP - Working Point
WSCT - Wainscot
WT - Weight
WTH - Width
WTPRF - Waterproofing
WWF - Welded Wire Fabric

BY : A GONZALEZ

PLOT DATE: 7/26/2019 1:59:28 PM

\\US1297-F01\SHARED_PROJECTS\195130174\E_DOCUMENTATION\BIM\Central_Files\n_arch_195130174.rvt

REV	DATE	BY	DESCRIPTION

SCALE

WARNING
0 ½ 1
IF THIS BAR DOES NOT MEASURE 1" THEN DRAWING IS NOT TO SCALE

DATE JULY 31, 2019
DRAWN BY A GONZALEZ
DESIGNED BY A GONZALEZ
CHECKED BY
APPROVED BY

60 % DESIGN
NOT FOR CONSTRUCTION
This document is an interim document and not suitable for construction. As an interim document, it may contain data that is potentially inaccurate or incomplete and is not to be relied upon without the express written consent of the preparer.

Stantec

LYNN WATER & SEWER COMMISSION

LYNN WATER AND SEWER COMMISSION

PHASE 3 WEST LYNN SEWER SEPARATION

ARCHITECTURAL GENERAL
LEGENDS, ABBREVIATIONS, AND NOTES

SHEET
AG-01

195130174

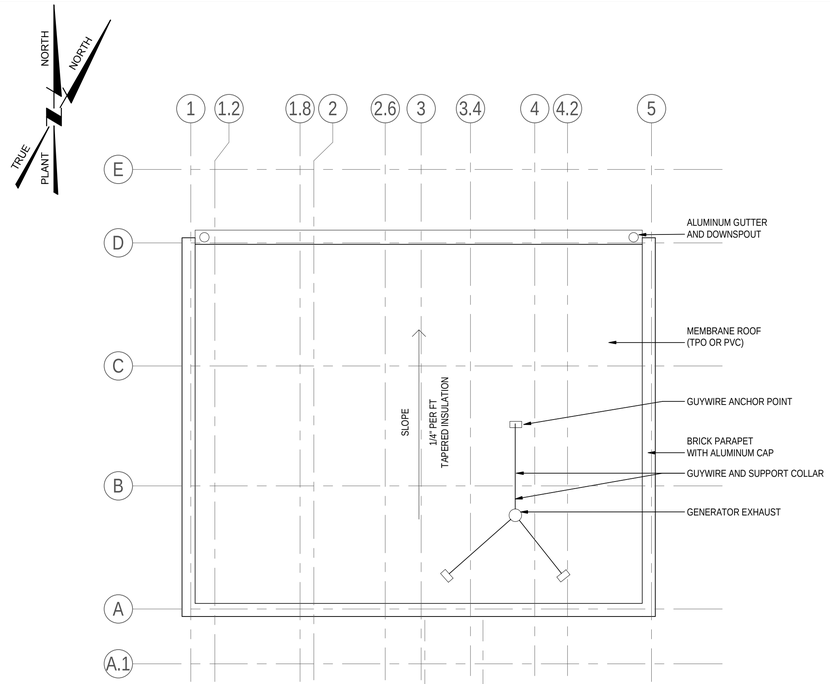

2 A-01 ROOF
1/8" = 1'-0"

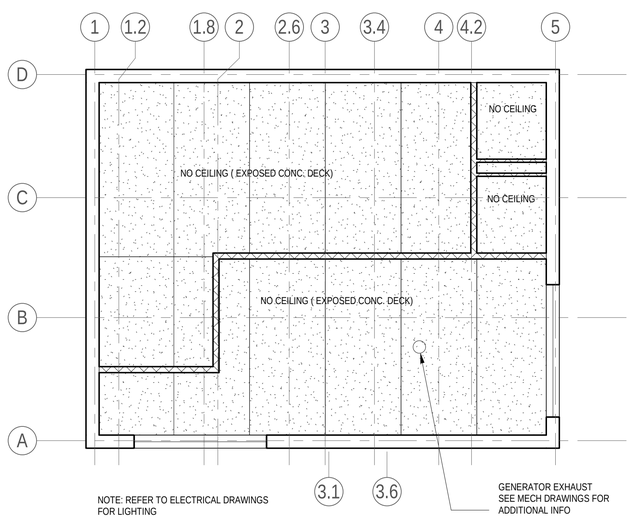

3 A-01 RCP LEVEL 1
1/8" = 1'-0"

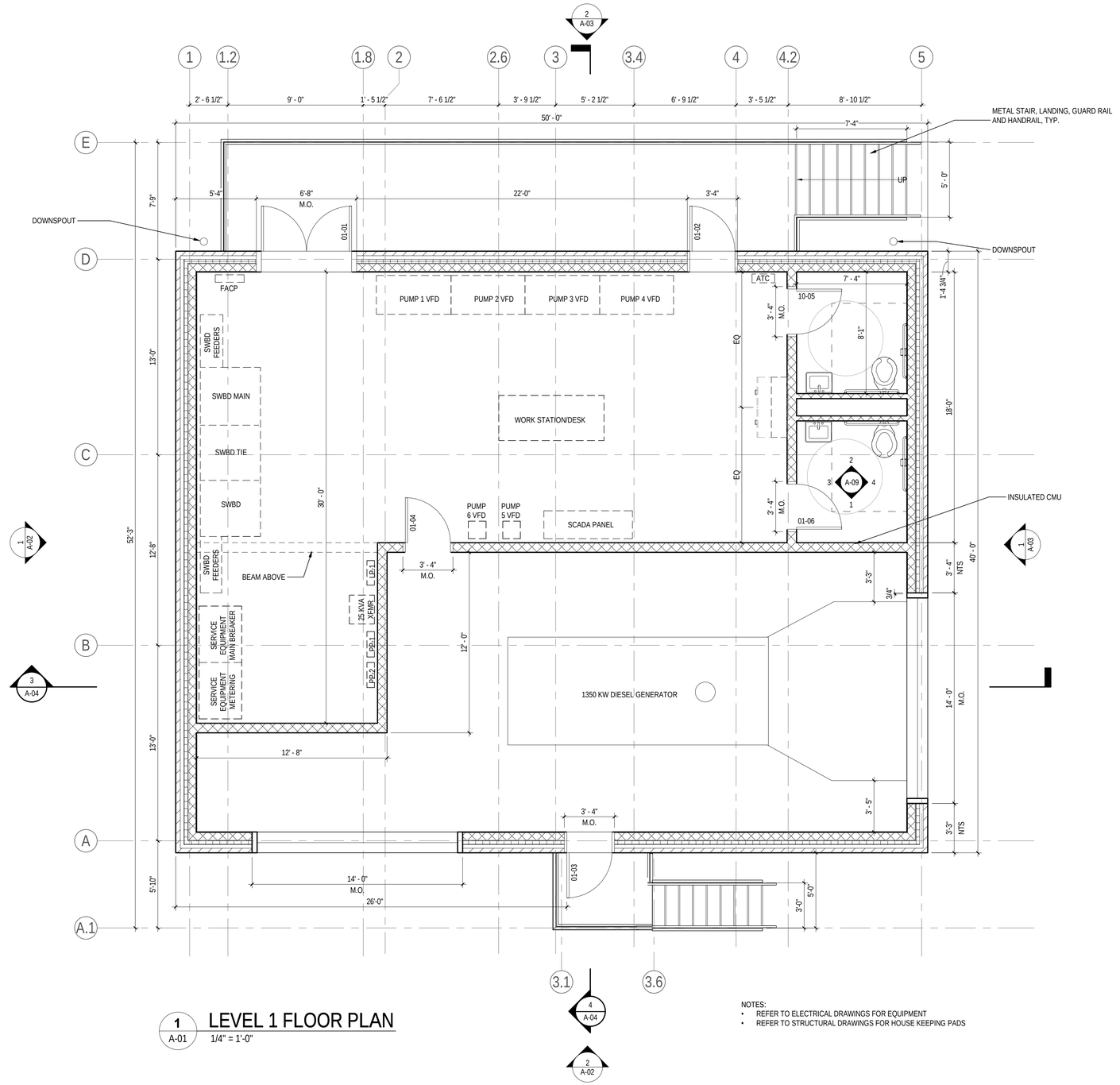

1 A-01 LEVEL 1 FLOOR PLAN
1/4" = 1'-0"

NOTES:
- REFER TO ELECTRICAL DRAWINGS FOR EQUIPMENT
- REFER TO STRUCTURAL DRAWINGS FOR HOUSE KEEPING PADS

0' 2' 4' 8'

BY : A GONZALEZ

PLOT DATE: 7/26/2019 1:59:21 PM

\\US1297-F01\SHARED_PROJECTS\195130174\E_DOCUMENTATION\BIM\Central_File\stn_arch_195130174.rvt

REV	DATE	BY	DESCRIPTION

SCALE: AS SHOWN

WARNING: 0 ½ 1 — IF THIS BAR DOES NOT MEASURE 1" THEN DRAWING IS NOT TO SCALE

DATE: JULY 31, 2019
DRAWN BY: A GONZALEZ
DESIGNED BY: A GONZALEZ
CHECKED BY:
APPROVED BY:

60 % DESIGN
NOT FOR CONSTRUCTION
This document is an interim document and not suitable for construction. As an interim document, it may contain data that is potentially inaccurate or incomplete and is not to be relied upon without the express written consent of the preparer.

Stantec

LYNN WATER & SEWER COMMISSION

LYNN WATER AND SEWER COMMISSION
PHASE 3 WEST LYNN SEWER SEPARATION
ARCHITECTURAL - ELECTRICAL BUILDING
LEVEL 1 FLOOR PLAN, RCP AND ROOF PLAN

SHEET A-01

195130174

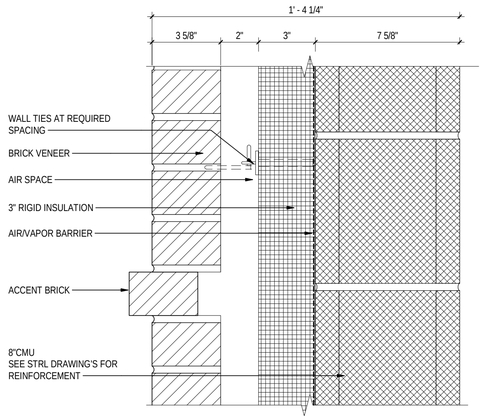

3 A-02 BVS-2 TYPICAL BRICK VENEER WALL W/8" CMU BACKUP

3" = 1'-0"

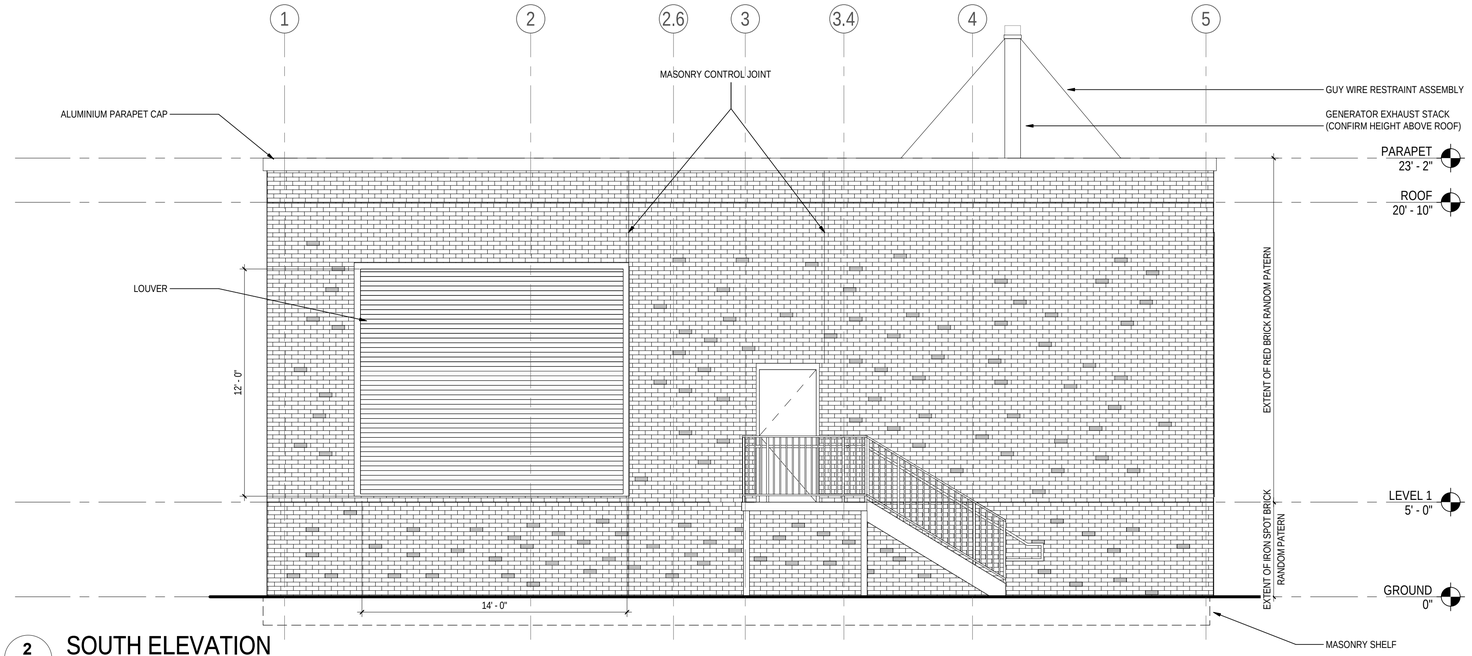

2 A-02 SOUTH ELEVATION

1/4" = 1'-0"

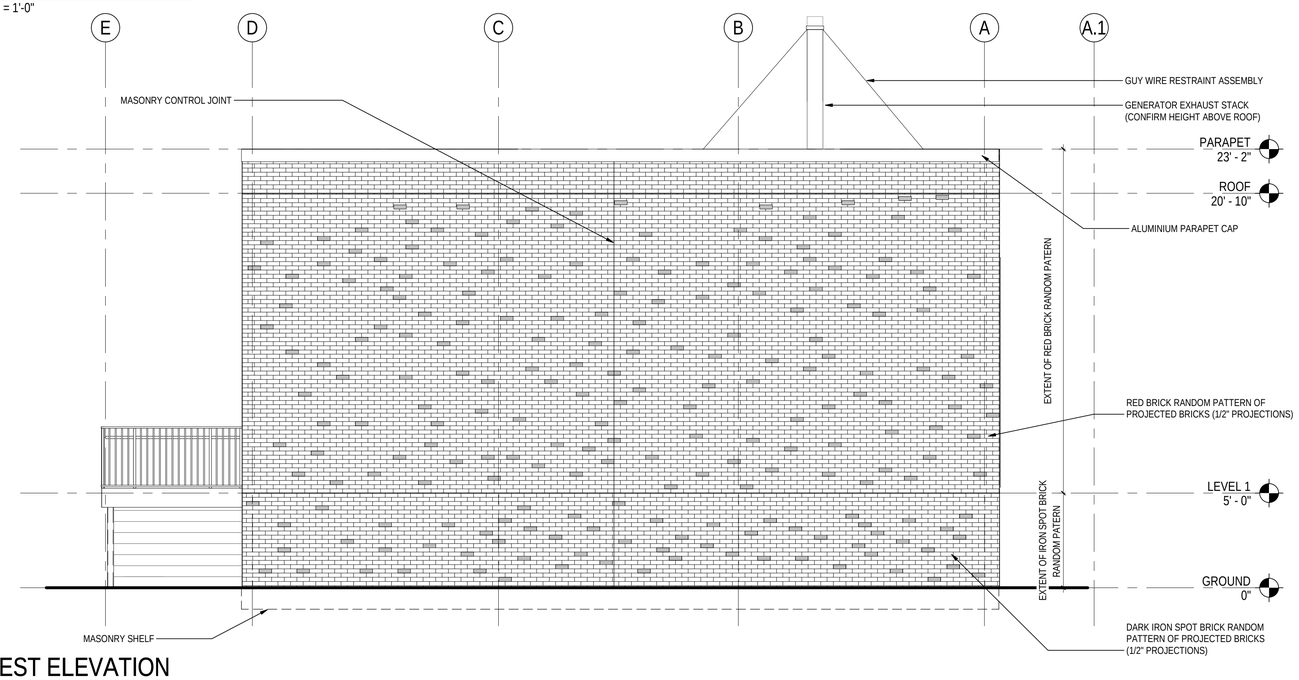

1 A-02 WEST ELEVATION

1/4" = 1'-0"

0' 2' 4' 8'

BY : A GONZALEZ

PLOT DATE: 7/19/2019 1:14:03 PM

\\US1297-F01\SHARED_PROJECTS\195130174\E_DOCUMENTATION\BIM\Central_File\stn_arch_195130174.rvt

REV	DATE	BY	DESCRIPTION

SCALE: As indicated

WARNING: 0 ½ 1 — IF THIS BAR DOES NOT MEASURE 1" THEN DRAWING IS NOT TO SCALE

DATE: JULY 31, 2019
DRAWN BY: A GONZALEZ
DESIGNED BY: A GONZALEZ
CHECKED BY:
APPROVED BY:

60 % DESIGN
NOT FOR CONSTRUCTION

This document is an interim document and not suitable for construction. As an interim document, it may contain data that is potentially inaccurate or incomplete and is not to be relied upon without the express written consent of the preparer.

Stantec

LYNN WATER & SEWER COMMISSION

LYNN WATER AND SEWER COMMISSION

PHASE 3 WEST LYNN SEWER SEPARATION

ARCHITECTURAL - ELECTRICAL BUILDING
EXTERIOR ELEVATION - I

SHEET A-02

195130174

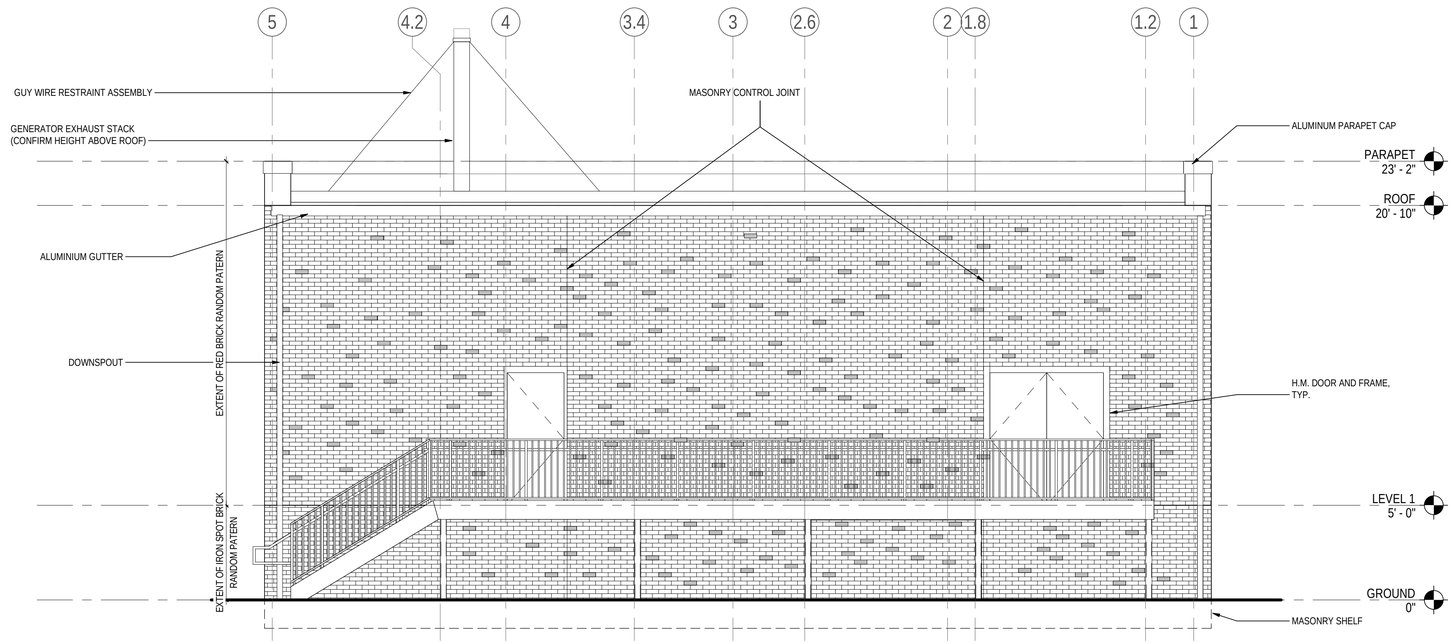

2 A-03 NORTH ELEVATION

1/4" = 1'-0"

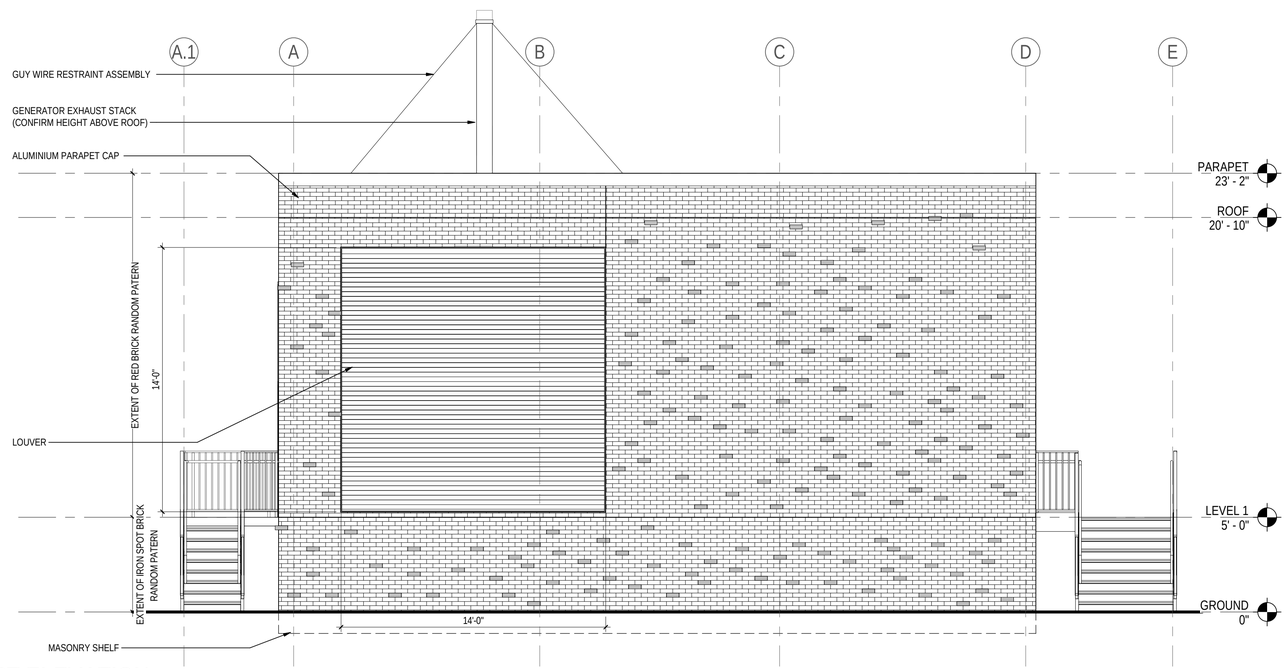

1 A-03 EAST ELEVATION

1/4" = 1'-0"

0' 2' 4' 8'

REV	DATE	BY	DESCRIPTION

SCALE: 1/4" = 1'-0"

WARNING: 0 ½ 1 — IF THIS BAR DOES NOT MEASURE 1" THEN DRAWING IS NOT TO SCALE

DATE	JULY 31, 2019
DRAWN BY	A GONZALEZ
DESIGNED BY	A GONZALEZ
CHECKED BY	
APPROVED BY	

60 % DESIGN
NOT FOR CONSTRUCTION

This document is an interim document and not suitable for construction. As an interim document, it may contain data that is potentially inaccurate or incomplete and is not to be relied upon without the express written consent of the preparer.

Stantec

LYNN WATER & SEWER COMMISSION

LYNN WATER AND SEWER COMMISSION

PHASE 3 WEST LYNN SEWER SEPARATION

ARCHITECTURAL - ELECTRICAL BUILDING
EXTERIOR ELEVATION - II

SHEET A-03

195130174

BY : A GONZALEZ

PLOT DATE: 7/19/2019 1:14:05 PM

\\US1297-F01\SHARED_PROJECTS\195130174\E_DOCUMENTATION\BIM\Central_Files\n_arch_195130174.rvt

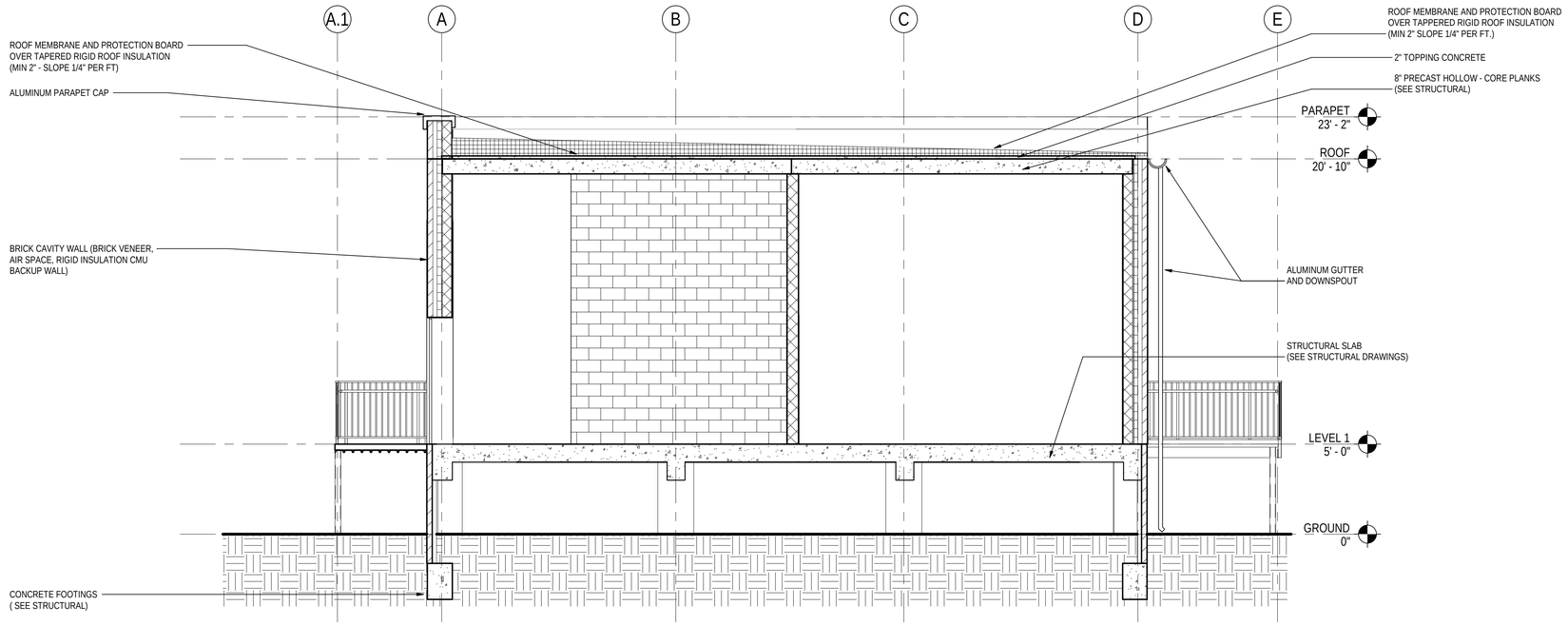

4 A-04 **Section A**
1/4" = 1'-0"

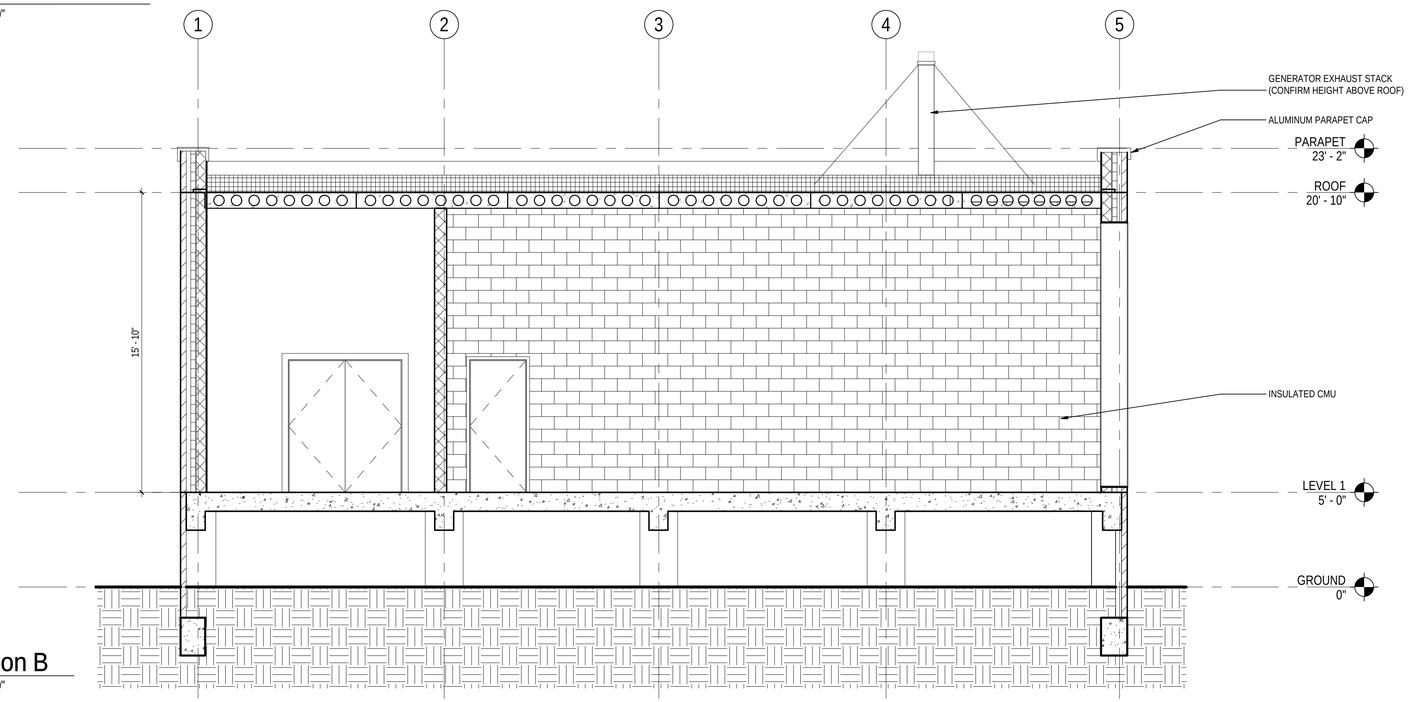

3 A-04 **Section B**
1/4" = 1'-0"

0' 2' 4' 8'

REV	DATE	BY	DESCRIPTION

SCALE 1/4" = 1'-0"

WARNING 0 ½ 1 IF THIS BAR DOES NOT MEASURE 1" THEN DRAWING IS NOT TO SCALE

DATE JULY 31, 2019
DRAWN BY A GONZALEZ
DESIGNED BY A GONZALEZ
CHECKED BY
APPROVED BY

60 % DESIGN
NOT FOR CONSTRUCTION
This document is an interim document and not suitable for construction. As an interim document, it may contain data that is potentially inaccurate or incomplete and is not to be relied upon without the express written consent of the preparer.

Stantec

LYNN WATER & SEWER COMMISSION

LYNN WATER AND SEWER COMMISSION
PHASE 3 WEST LYNN SEWER SEPARATION
ARCHITECTURAL - ELECTRICAL BUILDING
BUILDING SECTIONS

SHEET A-04

195130174

BY : A GONZALEZ
PLOT DATE: 7/19/2019 1:14:06 PM
\\US1297-F01\SHARED_PROJECTS\195130174\E_DOCUMENTATION\BIM\Central_Files\tn_arch_195130174.rvt

MECHANICAL GENERAL NOTES

1. PROCESS MECHANICAL EQUIPMENT AND PIPING LOCATIONS, DIMENSIONS, AND LAYOUTS ARE BASED ON THE EQUIPMENT SELECTED AND SPECIFIED BY THE ENGINEER. IF THE CONTRACTOR PROPOSES TO FURNISH EQUIPMENT THAT REQUIRES AN ARRANGEMENT OR SPACE OTHER THAN THAT INDICATED ON THE DRAWINGS OR AS SPECIFIED, THE CONTRACTOR SHALL PREPARE AND SUBMIT TO THE ENGINEER FOR APPROVAL DETAILED DRAWINGS AND EQUIPMENT LISTS (FOR IMPACTED DISCIPLINES) SHOWING EQUIPMENT AND PIPING LOCATIONS, DIMENSIONS, AND LAYOUTS PROPOSED. THIS INFORMATION SHALL INCLUDE, BUT NOT BE LIMITED TO, PLANS, SECTIONS, DETAILS, AND SCHEMATICS OF EQUIPMENT AND APPURTENANCES REQUIRED. THE CONTRACTOR SHALL PROVIDE DETAILS OF CHANGES TO ADJACENT PIPE ROUTING TO ACCOMMODATE TIE-IN LOCATIONS FOR PROPOSED EQUIPMENT.
2. OTHER DISCIPLINE BACKGROUND DRAWINGS AND DIMENSIONS SHOWN ON THE PROCESS MECHANICAL DRAWINGS ARE FOR REFERENCE ONLY. THE CONTRACTOR SHALL CLARIFY DISCREPANCIES BETWEEN DISCIPLINES WITH THE ENGINEER PRIOR TO THE FABRICATION OR CONSTRUCTION.
3. EQUIPMENT FOUNDATION AND PAD DIMENSIONS SHOWN ON THE PROCESS MECHANICAL DRAWINGS ARE APPROXIMATE. THE CONTRACTOR SHALL COORDINATE EQUIPMENT PAD DIMENSIONS WITH THE MANUFACTURER TO ACCOMMODATE THE ACTUAL SIZE OF EQUIPMENT FURNISHED (AS SHOWN ON THE APPROVED SHOP DRAWINGS) AND AVAILABLE SPACE. REFER TO THE STRUCTURAL DRAWINGS AND STRUCTURAL STANDARD DETAILS FOR EQUIPMENT PAD DESIGN REQUIREMENTS.
4. EQUIPMENT BASES HAVING DRAIN OUTLETS, EQUIPMENT DRAINS, AND PIPING DRAINS SHALL BE PIPED WITH A CONTINUOUS SLOPE TO THE NEAREST FLOOR DRAIN, FLOOR SINK, HUB DRAIN, TRENCH DRAIN, OR SUMP PUMP. DRAIN PIPE NOMINAL DIAMETER AND MATERIAL SHALL BE PER THE EQUIPMENT MANUFACTURER'S RECOMMENDATIONS. DRAIN PIPING SHALL BE SUITABLY SUPPORTED AND ROUTED IN SUCH A MANNER TO AVOID TRIP HAZARDS.
5. WHERE WELDING OF STAINLESS STEEL IS REQUIRED, PASSIVATE STAINLESS STEEL AFTER WELDING.

PIPING

1. CONTRACTOR SHALL PROVIDE INTERCONNECTING PIPING, FITTINGS, WALL PIPES, AND PIPE SUPPORTS (INCLUDING THOSE REQUIRED FOR INSTRUMENTS, DRAINS, AND OTHER APPURTENANCES) AS REQUIRED FOR A COMPLETE PROCESS MECHANICAL PIPING SYSTEM.
2. FOR CLARITY, SMALL DIAMETER PROCESS PIPING MAY NOT BE SHOWN IN ITS ENTIRETY. THE CONTRACTOR SHALL REFER TO THE CONTRACT DOCUMENTS TO DETERMINE THE NEW WORK ASSOCIATED WITH EACH PIPING SYSTEM TO COMPLETE THE WORK.
3. PROCESS MECHANICAL PIPING SYSTEMS AND EQUIPMENT SHALL BE INSTALLED IN SUCH A WAY TO BE EASILY DISMANTLED AND REMOVED WITHOUT DISTURBING THE REMAINING AND ADJACENT EQUIPMENT, PIPING, AND SUPPORTS.
4. PIPING CONNECTED TO PROCESS MECHANICAL EQUIPMENT SHALL BE INSTALLED AND SUPPORTED SUCH THAT IT DOES NOT IMPART STRAIN ON THE EQUIPMENT.
5. UNLESS OTHERWISE SHOWN, HORIZONTAL REDUCERS INSTALLED IN PIPING SYSTEMS SHALL BE ECCENTRIC (BOTTOM FLAT). HORIZONTAL REDUCERS CONNECTED TO PUMP SUCTIONS SHALL BE ECCENTRIC (TOP FLAT).
6. UNLESS OTHERWISE SHOWN, ELBOWS 2-1/2" AND LARGER SHALL BE STANDARD LONG RADIUS ELBOWS. WHERE REQUIRED IN TIGHT AREAS FOR FIT-UP, USE SHORT RADIUS OR REDUCING ELBOWS.
7. A MINIMUM HEADROOM CLEARANCE HEIGHT OF 7'-6" SHALL BE PROVIDED FOR OVERHEAD PROCESS MECHANICAL PIPING SYSTEMS.
8. SLEEVE COUPLINGS, FLANGED COUPLING ADAPTERS, AND FLEXIBLE COUPLINGS SUBJECT TO A POSITIVE INTERNAL FLUID PRESSURE SHALL BE PROVIDED WITH RESTRAINT SYSTEMS.
9. EXPOSED PIPING SUBJECT TO FREEZING SHALL BE INSULATED AND HEAT TRACED (IF HEAT TRACE IS SPECIFIED). SEE THE SPECIFICATIONS FOR HEAT TRACE AND INSULATION REQUIREMENTS.

PIPE SUPPORTS

1. FOR METERIALS, SPACING, AND ADDITIONAL REQUIREMENTS RELATED TO PIPE SUPPORTS, SEE THE SPECIFICATIONS.
2. PROVIDE PIPE SUPPORTS REQUIRED FOR A COMPLETE PIPING SYSTEM. PIPE SUPPORTS SHALL BE PROVIDED WHERE REQUIRED BY THE SPECIFICATIONS AND/OR AT POINTS MARKED WITH AN "X" ON PLAN VIEW DRAWINGS.
3. WHEN FIBERGLASS OR PVC-COATED PIPE SUPPORT MATERIALS ARE CUT OR DRILLED, THE CUT EXPOSED END OF THE MATERIAL SHALL BE RE-COATED OR SEALED IN ACCORDANCE WITH THE MANUFACTURER'S RECOMMENDATIONS.
4. PIPE SUPPORTS FOR PLASTIC PIPE OR FIBERGLASS PIPE SHALL BE PROVIDED WITH EXTRA WIDE PIPE SADDLES OR METALLIC SHIELDS WITH LOOSE FIT AROUND THE FULL CIRCUMFERENCE OF THE PIPE AT EACH PIPE SUPPORT.
5. SUPPORT STRUT CHANNEL ENDS THAT EXTEND INTO PERSONNEL TRAFFIC AREAS SHALL HAVE PLASTIC END CAPS.

VALVES AND GATES

1. VALVE AND GATE ACTUATORS SHALL BE MOUNTED TO ALLOW PROPER OPENING AND CLOSING WITHOUT INTERFERENCE WITH ADJACENT PIPING OR EQUIPMENT. UNLESS INDICATED ON THE DRAWINGS, ORIENTATION OF OPERATORS SHALL BE APPROVED BY THE ENGINEER.
2. UNLESS INDICATED ON THE DRAWINGS, REFER TO THE MANUFACTURER'S RECOMMENDATIONS AND PROJECT SPECIFICATIONS REGARDING THE LOCATION OF THE VALVE SEAT (UPSTREAM OR DOWNSTREAM) AND STEM ORIENTATION.

REFERENCE SYMBOLS

SECTION IDENTIFICATION

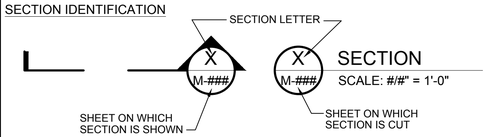

DETAIL IDENTIFICATION

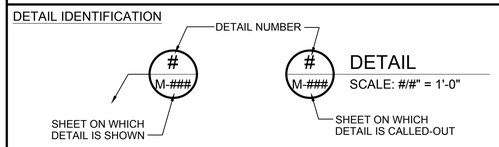

STANDARD DETAIL IDENTIFICATION

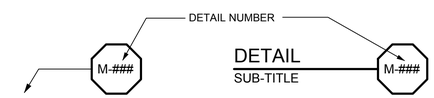

EQUIPMENT IDENTIFICATION

SEE EQUIPMENT SCHEDULE / SPECIFICATIONS

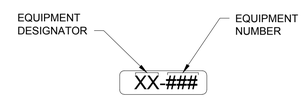

LEGEND

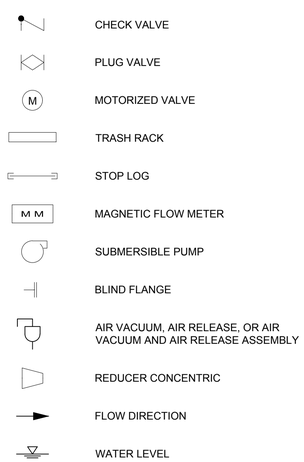

BY: HALSTEAD, ZACHARY

PLOT DATE: Friday, July 26, 2019

DWG FILE: C:\pwworkdir\d0537463\PHASE 3_BSS_M_MG1.dwg

REV	DATE	BY	DESCRIPTION

SCALE: NO SCALE

WARNING: 0 ½ 1 — IF THIS BAR DOES NOT MEASURE 1" THEN DRAWING IS NOT TO SCALE

DATE	JULY 31, 2019
DRAWN BY	Z HALSTEAD
DESIGNED BY	L LIANG
CHECKED BY	
APPROVED BY	

60% DESIGN
NOT FOR CONSTRUCTION

This document is an interim document and not suitable for construction. As an interim document, it may contain data that is potentially inaccurate or incomplete and is not to be relied upon without the express written consent of the preparer.

Stantec

LYNN WATER & SEWER COMMISSION

LYNN WATER AND SEWER COMMISSION

PHASE 3 WEST LYNN SEWER SEPARATION

MECHANICAL GENERAL
LEGEND AND NOTES

SHEET
MG-01

195130174

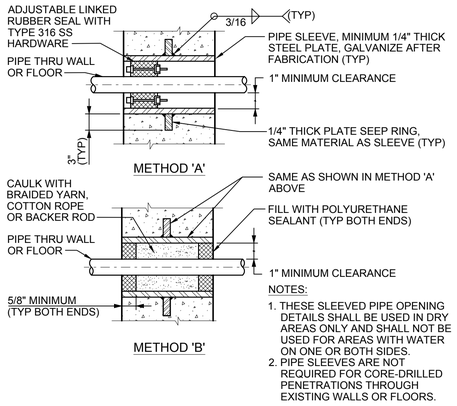

NOTES:

1. THESE SLEEVED PIPE OPENING DETAILS SHALL BE USED IN DRY AREAS ONLY AND SHALL NOT BE USED FOR AREAS WITH WATER ON ONE OR BOTH SIDES.
2. PIPE SLEEVES ARE NOT REQUIRED FOR CORE-DRILLED PENETRATIONS THROUGH EXISTING WALLS OR FLOORS.

SLEEVED PIPE OPENING

REV 091515 M-111

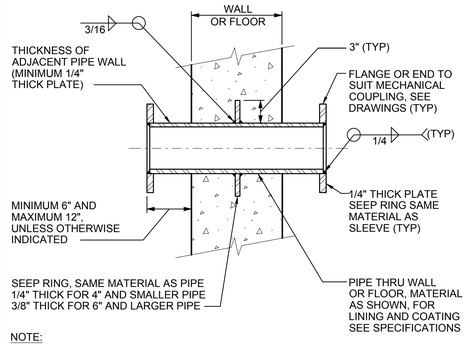

NOTE:

1. SEE STRUCTURAL DRAWINGS FOR WALL THICKNESS.

FABRICATED PIPE THIMBLE

REV 091515 M-113

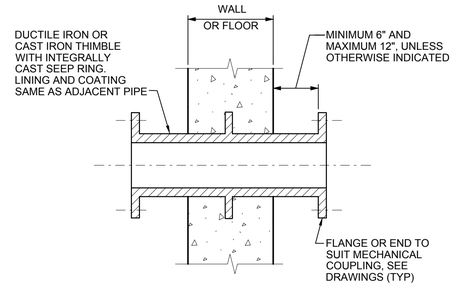

NOTE:

1. SEE STRUCTURAL DRAWINGS FOR WALL THICKNESS.

FLANGED OR GROOVED DUCTILE IRON OR CAST IRON PIPE THIMBLE

REV 091515 M-116

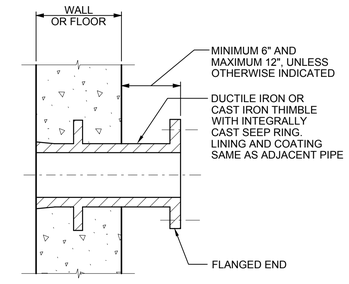

NOTE:

1. SEE STRUCTURAL DRAWINGS FOR WALL THICKNESS.

FLANGED AND SPIGOT DUCTILE IRON OR CAST IRON PIPE THIMBLE

REV 091515 M-122

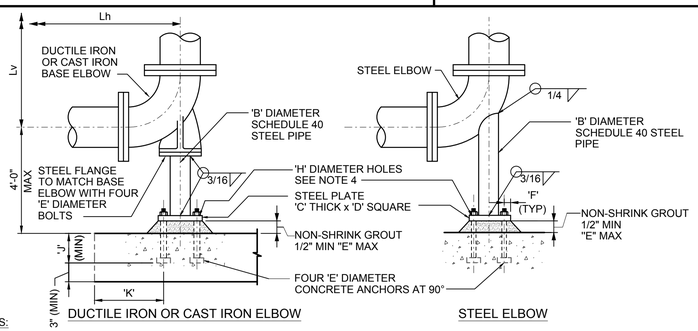

NOTES:

1. PROVIDE CAST-IN-PLACE HEAVY HEX HEAD ASTM F1554 GR 36 ANCHORS, UNO.
2. HOT DIP GALVANIZE PARTS AFTER FABRICATION, UNO. PROVIDE 316SS PARTS AND BOLTS IN SUBMERGED OR CORROSIVE CONDITIONS.
3. 'L' IS ALLOWABLE LONGITUDINAL TRIBUTARY LENGTH, DEFINED AS 1/2 THE VERTICAL DISTANCE TO THE NEXT LATERAL PIPE SUPPORT (Lv) PLUS 1/2 THE HORIZONTAL DISTANCE TO THE NEXT LONGITUDINAL PIPE SUPPORT (Lh). REFER TO TABLE FOR MAXIMUM ALLOWABLE 'L' FOR EACH SUPPORT.
4. FOR 3/4" ANCHORS AND LARGER, PROVIDE SQUARE WASHERS PER AISC MANUAL OF STEEL CONSTRUCTION TABLE 14-2 WITH STD HOLES WELDED TO PLATE WITH 3/16" FILLETS. USE 1 3/4" SQ.x3/16" THICK WASHERS FOR 5/8" ANCHORS.
   IF ADHESIVE ANCHORS ARE USED (SIMPSON SET XP, OR EQUAL), USE REDUCED ALLOWABLE
5. LONGITUDINAL TRIBUTARY LENGTH, 'L' ADH, GIVEN IN TABLE. OVERSIZED HOLES AND WASHERS ARE NOT REQUIRED. DO NOT USE ADHESIVE ANCHORS FOR PIPES LARGER THAN 36" DIAMETER.

	DIMENSIONS IN INCHES (UNO)								S_{ds}≤0.5		S_{ds}≤0.8		S_{ds}≤1.2	
NOMINAL PIPE DIAMETER	'B'	`C'	`D'	'E'	'F'	'H'	'J'	'K'	'L'	'L' ADH	'L'	'L' ADH	'L'	'L' ADH
4	2	3/8	6	5/8	1 3/8	1 1/16	4 1/2	12	33'	17'	21'	11'	14'	7'
6	2 1/2	3/8	7	5/8	1 3/8	1 1/16	8	12	38'	19'	24'	12'	16'	8'
8	4	1/2	10	5/8	1 3/8	1 1/16	8	12	43'	22'	27'	14'	18'	9'
10	4	1/2	10	5/8	1 3/8	1 1/16	8	12	43'	22'	27'	14'	18'	9'
12	6	5/8	11	7/8	1 7/8	1 9/16	9	12	48'	18'	30'	12'	20'	8'
14	6	5/8	11	7/8	1 7/8	1 9/16	9	12	48'	18'	30'	12'	20'	8'
16	6	5/8	17	1	2 1/4	1 13/16	9	13	52'	20'	33'	13'	22'	9'
18	8	5/8	17	1	2 1/4	1 13/16	9	13	52'	20'	33'	13'	22'	9'
20	8	3/4	21	1	2 1/4	1 13/16	9	13	57'	22'	36'	14'	24'	9'
24	8	3/4	21	1	2 1/4	1 13/16	9	13	57'	22'	36'	14'	24'	9'
30	10	7/8	24	1 1/4	2 5/8	2 1/16	9	16	57'	22'	36'	14'	24'	9'
36	12	7/8	32	1 1/4	2 5/8	2 1/16	9	16	57'	22'	36'	14'	24'	9'
42	16	1	32	1 1/2	3	2 5/16	11	16	57'	NA	36'	NA	24'	NA
48	18	1 1/8	38	1 3/4	3 1/2	2 3/4	12	22	57'	NA	36'	NA	24'	NA

SEISMIC AND WIND COMPLIANT - DESIGN CRITERIA

1. THE SUPPORTS ARE ADEQUATE FOR SEISMIC RESPONSE COEFFICIENT (SDS) GIVEN IN THE TABLE. SEISMIC FORCE ASSUMPTIONS (ASCE 7-10, EQN 13.3-1): ap=2.5, Rp=6, Ωo=2.5, Ip=1.0, z/h=1.0 FOR 4" TO 18" PIPES, z/h=0.4 FOR PIPES LARGER THAN 18".
2. THE SUPPORTS, DESIGNED FOR SEISMIC LOADS, ARE ALSO ADEQUATE FOR A DESIGN WIND SPEED (Vult) OF UP TO 200 MPH WITH A MAXIMUM HEIGHT ABOVE GRADE OF 40', EXCEPT FOR 4" AND 6" PIPE DIAMETERS, WHICH ARE ADEQUATE FOR Vult OF UP TO 175 MPH. WIND FORCE ASSUMPTIONS: EXPOSURE CATEGORY C, Kzt=1.0, Kz=1.04, Kd=0.95, G=0.85, Cf=1.2 (DESIGNED PER ASCE 7-10, SECTION 29.5).

ELBOW SUPPORT

(FOR PIPE 48" DIAMETER AND SMALLER)

M-140

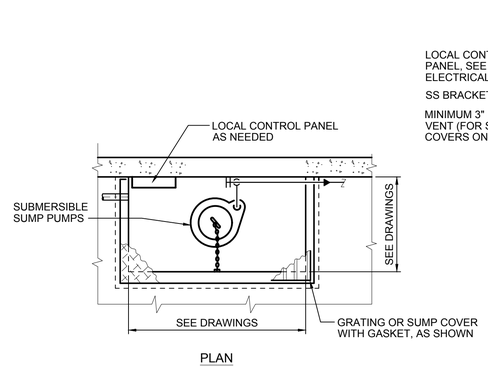

NOTES:

1. FOR ENTERING DRAINS, SEE DRAWINGS.
2. PIPE SIZES AS SHOWN.

DRAINAGE SUMP WITH DUPLEX PUMPS

M-316

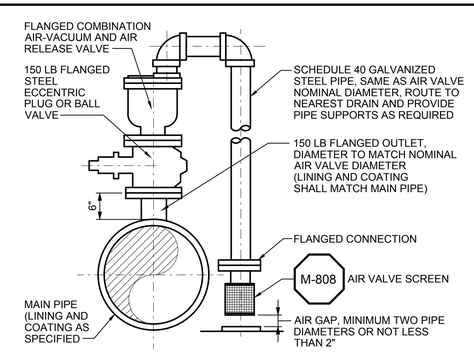

NOTE:

1. ALL COMPONENTS FOR PIPING SYSTEMS WITH SERVICE PRESSURE CLASS GREATER THAN 150 PSI SHALL BE SUITABLE FOR THE HIGHER PRESSURE.

AIR-VACUUM AND AIR RELEASE VALVE ASSEMBLY

(4" AND LARGER)

REV 091515 M-805

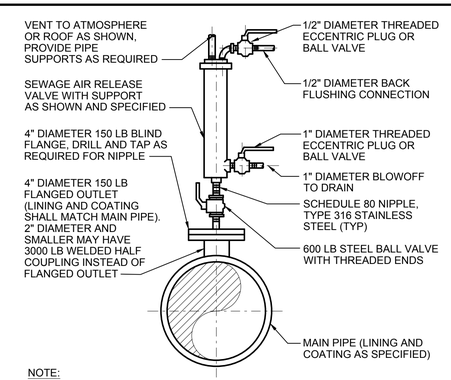

NOTE:

1. ALL COMPONENTS FOR PIPING SYSTEMS WITH SERVICE PRESSURE CLASS GREATER THAN 150 PSI SHALL BE SUITABLE FOR THE HIGHER PRESSURE.

SEWAGE AIR RELEASE VALVE

REV 091515 M-806

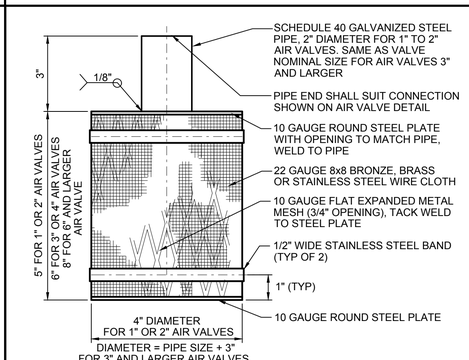

NOTE :

1. AIR VALVE SCREEN ASSEMBLY (EXCEPT WIRE CLOTH AND STAINLESS STEEL BANDS) SHALL BE COATED PER THE REQUIREMENTS OF THE SPECIFICATION 'PROTECTIVE COATING'.

AIR VALVE SCREEN

REV 091515 M-808

REV	DATE	BY	DESCRIPTION

SCALE: NO SCALE

WARNING: 0 ½ 1 — IF THIS BAR DOES NOT MEASURE 1" THEN DRAWING IS NOT TO SCALE

DATE	JULY 31, 2019
DRAWN BY	Z HALSTEAD
DESIGNED BY	L LIANG
CHECKED BY	
APPROVED BY	

60% DESIGN
NOT FOR CONSTRUCTION

This document is an interim document and not suitable for construction. As an interim document, it may contain data that is potentially inaccurate or incomplete and is not to be relied upon without the express written consent of the preparer.

Stantec

LYNN WATER & SEWER COMMISSION

LYNN WATER AND SEWER COMMISSION

PHASE 3 WEST LYNN SEWER SEPARATION

MECHANICAL GENERAL
STANDARD DETAILS - I

SHEET MG-02

195130174

DWG FILE: C:\pwworkdir\d0537463\PHASE 3_BSS_M_MG2.dwg
PLOT DATE: Friday, July 26, 2019
BY: HALSTEAD, ZACHARY

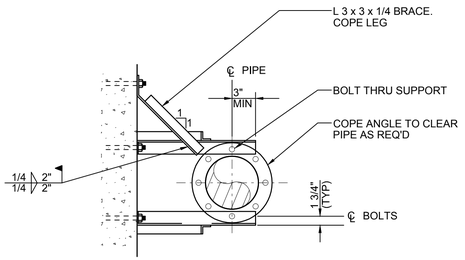

SECTION

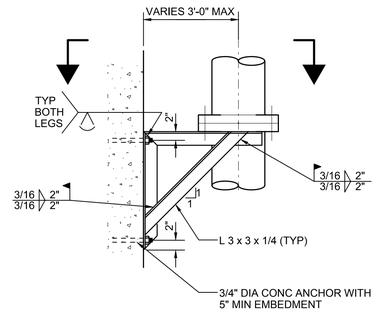

ELEVATION

NOTES:

1. PIPE SUPPORT IS TO BE USED FOR 4" DIA AND LARGER PIPE.
2. MAXIMUM ALLOWABLE VERTICAL LOAD: 900 lb
3. ALL PARTS SHALL BE TYPE 316 SS CONSTRUCTION.

PIPE SUPPORT (VERTICAL WALL)

M-901

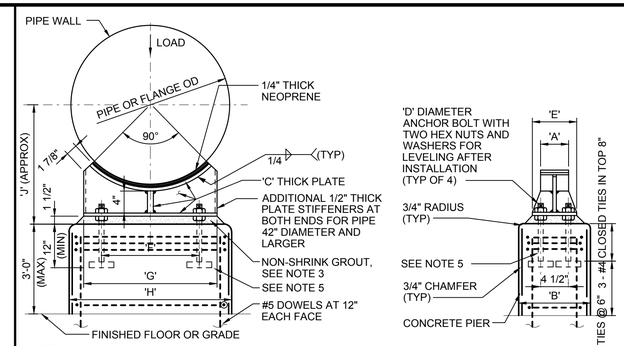

NOTES:

1. HOT DIP GALVANIZE PARTS AFTER FABRICATION.
2. WHEN SUPPORTING PIPE AND FLANGE ALTERNATELY ON THE SAME LINE, CONCRETE PIERS FOR PIPE SUPPORTS SHALL ALL HAVE THE SAME DIMENSION 'H' FOR FLANGE SUPPORT.
3. WHERE DIFFERENTIAL SETTLEMENT IS LIKELY TO OCCUR, OMIT GROUT AS DIRECTED BY THE ENGINEER.
4. WHERE DIRECTED BY THE STRUCTURAL ENGINEER, BOTTOM OF PIERS SHALL EXTEND BELOW BOTTOM OF SLAB.
5. ANCHOR BOLT OR CONCRETE ANCHOR WITH TWO NUTS AND ONE WASHER. PROVIDE 4x1/2x4" BAR WELDED TO BOLT (TYP OF 4, MINIMUM).
6. WHERE PIPE SUPPORT OCCURS ON GRADE, REFER TO STRUCTURAL DRAWINGS FOR DETAILS.

DIMENSIONS IN INCHES

NOMINAL PIPE DIAMETER	A	B	C	D	E	SUPPORTING PIPE F	SUPPORTING PIPE G	SUPPORTING PIPE H	SUPPORTING PIPE J	SUPPORTING FLANGE F	SUPPORTING FLANGE G	SUPPORTING FLANGE H	SUPPORTING FLANGE J
6	4	12	3/8	5/8	7	4 1/2	6	12	10	6 1/2	9	16	13
8	4	12	3/8	5/8	7	5	8	13	11	7 1/2	9	16	14
10	4	12	3/8	5/8	7	6	9	15	12	9	13	18	15
12	4	12	3/8	5/8	7	7	11	17	13	10	15	20	16
14	4	12	3/8	5/8	7	8	12	17	14	11	16	21	17
16	4	12	3/8	5/8	7	9	13	19	15	12	18	24	18
18	4	12	3/8	5/8	7	10	14	20	16	13	19	24	19
20	5	12	3/8	5/8	7	10	15	21	17	15	21	26	21
22	5	12	3/8	5/8	7	12	18	24	18	16	23	28	22
24	5	12	3/8	5/8	7	13	19	24	19	16	24	30	23
26	5	12	3/8	3/4	7	14	21	27	20	18	26	32	24
30	5	12	3/8	3/4	7	16	23	28	22	20	29	34	26
34	5	15	3/8	3/4	7	18	26	32	24	22	33	39	29
36	6	15	3/8	3/4	7	19	27	32	25	24	34	40	30
42	6	18	1/2	1	9	21	31	36	28	27	39	45	33
48	6	18	1/2	1	9	24	36	42	31	30	44	50	37
54	6	18	1/2	1	9	28	40	46	34	34	48	56	40
60	6	18	1/2	1 1/8	9	32	45	52	37	36	54	60	44
66	6	18	1/2	1 1/8	9	33	49	56	40	40	59	66	47
72	6	18	1/2	1 1/8	9	36	53	60	43	44	63	70	50

PIPE SUPPORT

(FOR PIPE 72" DIAMETER AND SMALLER)

M-902

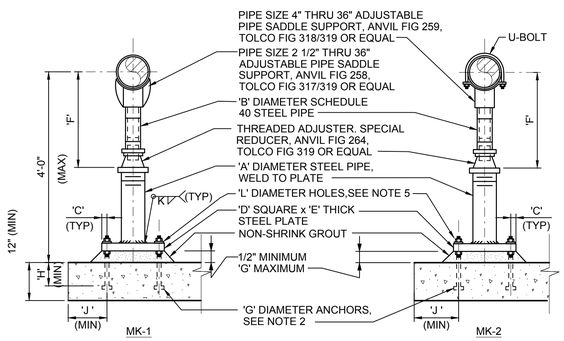

NOTES:

1. HOT DIP GALVANIZE PARTS AFTER FABRICATION, UNO. PROVIDE 316 SS PARTS AND BOLTS IN SUBMERGED OR CORROSIVE CONDITIONS.
2. PROVIDE CAST-IN-PLACE HEAVY HEX HEAD ASTM F1554 GR 36 ANCHORS, UNO.
3. REFER TO TABLE FOR MAXIMUM ALLOWABLE SERVICE LOAD ON EACH SUPPORT.
4. USE MK-2, UNLESS OTHERWISE INDICATED.
5. FOR 3/4" ANCHORS AND LARGER, PROVIDE SQUARE WASHERS PER AISC MANUAL OF STEEL CONSTRUCTION TABLE 14-2 WITH STD HOLES WELDED TO PLATE WITH 3/16" FILLETS. USE 1 3/4" SQ.x3/16" THICK WASHERS FOR 5/8" ANCHORS.
6. IF ADHESIVE ANCHORS ARE USED (SIMPSON SET XP, OR EQUAL), USE REDUCED MAX LOADS IN COLUMN 'M'. OVERSIZED HOLES AND WASHERS ARE NOT REQUIRED.

SEISMIC AND WIND COMPLIANT DESIGN CRITERIA

1. THE SUPPORTS ARE ADEQUATE FOR SEISMIC RESPONSE COEFFICIENT (SDS) GIVEN IN THE TABLE. SEISMIC FORCE ASSUMPTIONS (ASCE 7-10, EQN 13.3-1): ap=2.5, Rp=6, Ωo=2.5, Ip=1.0, z/h=1.0.
2. THE SUPPORTS, DESIGNED FOR SEISMIC LOADS, ARE ALSO ADEQUATE FOR A DESIGN WIND SPEED (Vult) OF UP TO 165 MPH WITH A MAXIMUM HEIGHT ABOVE GRADE OF 40'. WIND FORCE ASSUMPTIONS: EXPOSURE CATEGORY C, Kzt=1.0, Kz=1.04, Kd=0.95, G=0.85, Cf=1.2 (DESIGNED PER ASCE 7-10 SECTION 29.5 - OTHER STRUCTURES).

DIMENSIONS IN INCHES

NOMINAL PIPE DIAMETER	'A' (SCH 40 UNO)	'B'	'C'	'D'	'E'	'F' (APPROX) (MINIMUM)	'F' (APPROX) (MAXIMUM)	'G'	'H'	'J'	'K'	'L'	Sds<0.5 LOAD MAX (LBS)	Sds<0.5 'M'	Sds<0.8 LOAD MAX (LBS)	Sds<0.8 'M'	Sds<1.2 LOAD MAX (LBS)	Sds<1.2 'M'
2 1/2	* 2 / 2 1/2	1 1/2	1	8	7/16	7	11 1/2	1/2	4	6	3/8	13/16	1400	500	850	300	550	200
3	* 2 / 2 1/2	1 1/2	1	8	7/16	7 5/16	11 13/16	1/2	4	6	3/8	13/16	1400	500	850	300	550	200
3 1/2	* 2 / 2 1/2	1 1/2	1	8	7/16	7 9/16	12 1/16	1/2	4	6	3/8	13/16	1400	500	850	300	550	200
4	3	* 2 1/2 / 3	1 1/4	10	5/8	10 1/4	14 3/4	5/8	5	8	7/16	1 1/16	2650	1100	1675	200	1100	450
6	3	* 2 1/2 / 3	1 1/4	10	5/8	11 9/16	16 1/16	5/8	5	8	7/16	1 1/16	2650	1100	1675	200	1100	450
8	3	* 2 1/2 / 3	1 1/4	10	5/8	13 9/16	18 1/16	5/8	5	8	7/16	1 1/16	2650	1100	1675	200	1100	450
10	3	* 2 1/2 / 3	1 1/4	10	5/8	14 5/8	19 1/8	5/8	5	8	7/16	1 1/16	2650	1100	1675	200	1100	450
12	3	* 2 1/2 / 3	1 1/4	10	5/8	15 5/8	20 1/8	5/8	5	8	7/16	1 1/16	2650	1100	1675	200	1100	450
14	4	3	1 3/8	12	3/4	18 7/8	23 3/8	3/4	7	10.5	1/2	1 5/16	4200	2200	2650	1400	1750	925
16	4	3	1 3/8	12	3/4	19 7/8	24 3/8	3/4	7	10.5	1/2	1 5/16	4200	2200	2650	1400	1750	925
18	6 (SCH 80)	* 4 / 3 1/2	1 5/8	14	1 1/4	22 1/4	26 3/4	7/8	8	12	11/16	1 9/16	6050	2775	3800	1750	2500	1150
20	6 (SCH 80)	* 4 / 3 1/2	1 5/8	14	1 1/4	23 1/4	27 3/4	7/8	8	12	11/16	1 9/16	6050	2775	3800	1750	2500	1150
24	6 (SCH 80)	4	1 5/8	14	1 1/4	26 1/2	31	7/8	8	12	11/16	1 9/16	6050	2775	3800	1750	2500	1150
30	6 (SCH 80)	4	1 7/8	16	1 1/4	29 5/8	34 1/8	1	8	12	11/16	1 13/16	8150	3100	5100	1925	3400	1300
32	6 (SCH 80)	4	1 7/8	16	1 1/4	30 5/8	35 1/8	1	8	12	11/16	1 13/16	8150	3100	5100	1925	3400	1300
36	6 (SCH 80)	4	1 7/8	16	1 1/4	32 5/8	37 1/8	1	8	12	11/16	1 13/16	8150	3100	5100	1925	3400	1300

* SEE MANUFACTURER

ADJUSTABLE PIPE SUPPORT WITH OR WITHOUT 'U' BOLT

(FOR PIPE 36" DIAMETER AND SMALLER)

M-903

BY: HALSTEAD, ZACHARY

PLOT DATE: Friday, July 26, 2019

DWG FILE: C:\pwworkdir\d0537463\PHASE 3_BSS_M_MG3.dwg

REV	DATE	BY	DESCRIPTION

SCALE: NO SCALE

WARNING: 0 ½ 1 — IF THIS BAR DOES NOT MEASURE 1" THEN DRAWING IS NOT TO SCALE

DATE: JULY 31, 2019
DRAWN BY: Z HALSTEAD
DESIGNED BY: L LIANG
CHECKED BY:
APPROVED BY:

60% DESIGN
NOT FOR CONSTRUCTION

This document is an interim document and not suitable for construction. As an interim document, it may contain data that is potentially inaccurate or incomplete and is not to be relied upon without the express written consent of the preparer.

Stantec

LYNN WATER & SEWER COMMISSION

LYNN WATER AND SEWER COMMISSION

PHASE 3 WEST LYNN SEWER SEPARATION

MECHANICAL GENERAL
STANDARD DETAILS - II

SHEET MG-03

195130174

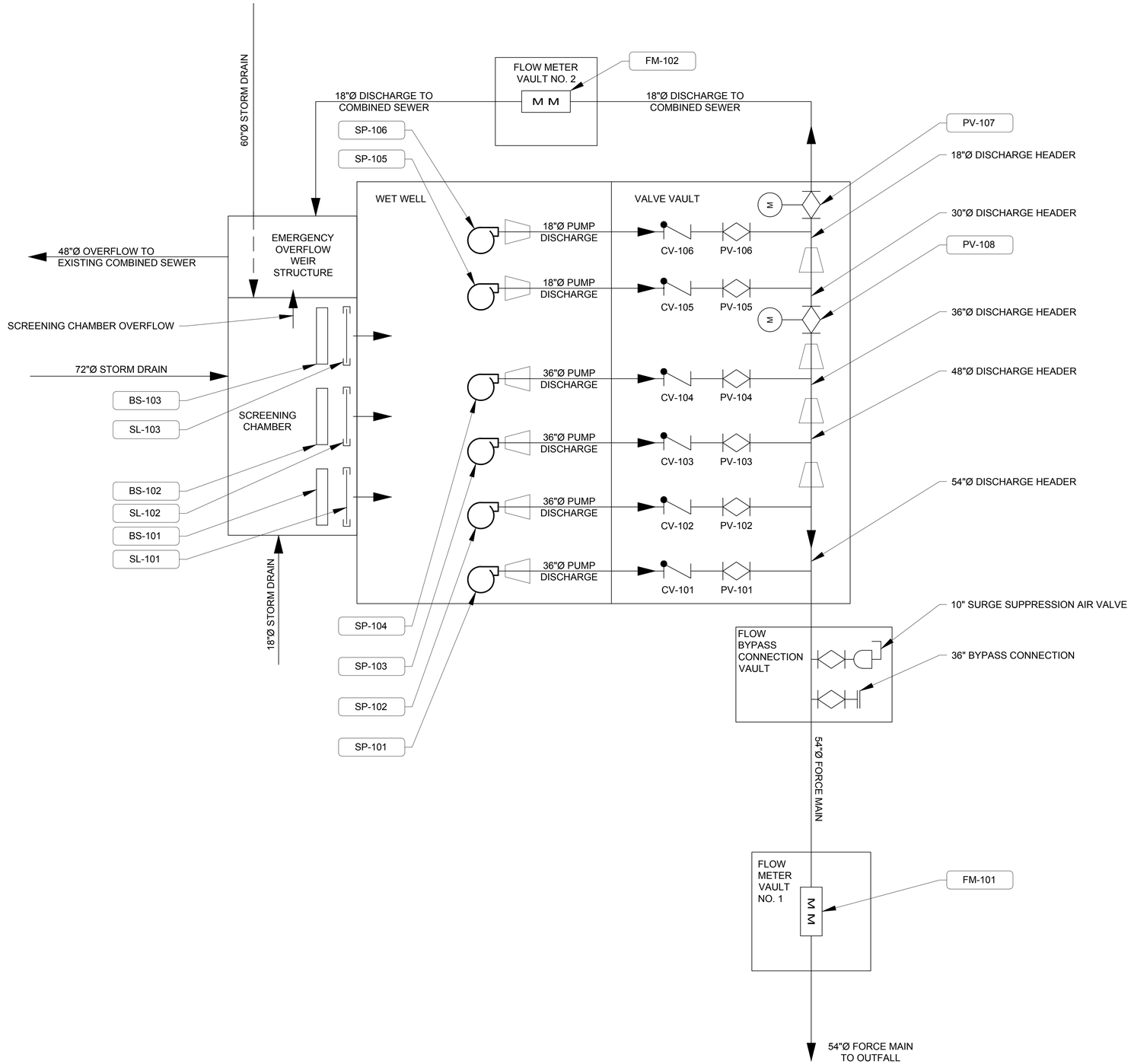

BY: HALSTEAD, ZACHARY

PLOT DATE: Friday, July 26, 2019

DWG FILE: C:\pwworkdir\d0537463\PHASE 3_BSS_M_M01.dwg

REV	DATE	BY	DESCRIPTION

SCALE: NO SCALE

WARNING: 0 ½ 1 — IF THIS BAR DOES NOT MEASURE 1" THEN DRAWING IS NOT TO SCALE

DATE: JULY 31, 2019
DRAWN BY: S HATHAWAY
DESIGNED BY: L LIANG
CHECKED BY:
APPROVED BY:

60% DESIGN
NOT FOR CONSTRUCTION

This document is an interim document and not suitable for construction. As an interim document, it may contain data that is potentially inaccurate or incomplete and is not to be relied upon without the express written consent of the preparer.

Stantec

LYNN WATER & SEWER COMMISSION

LYNN WATER AND SEWER COMMISSION

PHASE 3 WEST LYNN SEWER SEPARATION

MECHANICAL
PROCESS FLOW DIAGRAM

SHEET
M-01

195130174

PROCESS PIPING AND VALVE SCHEDULE

SYSTEM DESIGN CONDITIONS					PIPING					VALVES			TESTING REQUIREMENTS				REMARKS
SERVICE	DESCRIPTION	NOMINAL SIZE (IN)	PRESSURE (PSI)		MATERIAL	SCH./CLASS	LINING	COATING	JOINT TYPE	BLOCK (TAG NO.)	CHECK (TAG NO.)	THROTTLING	PRESSURE (PSI)	MEDIUM	TEST DURATION (MIN.)	LEAKAGE ALLOWANCE	
			WORK.	MAX.													
SW	PUMP NO. 1, 2, 3, AND 4 DISCHARGE	36	30	80	DI	CL54	CERAMIC	EPOXY	FLG ANSI 125 / 150	PLUG VALVE - MANUAL (PV-101, PV-102, PV-103, PV-104)	AIR CUSHIONED SWING CHECK VALVE - MANUAL (CV-101, CV-102, CV-103, CV-104)	NA	125	WATER	60	ZERO	VALVE JOINTS SAME AS PIPE JOINTS, UNLESS OTHERWISE SHOWN
SW	PUMP NO. 5 AND 6 DISCHARGE	18	30	80	DI	CL54	CERAMIC	EPOXY	FLG ANSI 125 / 150	PLUG VALVE - MANUAL (PV-105, PV-106)	AIR CUSHIONED SWING CHECK VALVE - MANUAL (CV-105, CV-106)	NA	125	WATER	60	ZERO	VALVE JOINTS SAME AS PIPE JOINTS, UNLESS OTHERWISE SHOWN
SW	HEADER TO OUTFALL FORCE MAIN	18	30	80	DI	CL54	CERAMIC	EPOXY	FLG ANSI 125 / 150	PLUG VALVE - MOTORIZED (PV-107)	NA	NA	125	WATER	60	ZERO	VALVE JOINTS SAME AS PIPE JOINTS, UNLESS OTHERWISE SHOWN
SW	HEADER BTWN PUMP NO. 5 AND 6 DISCHARGE	18	30	80	DI	CL54	CERAMIC	EPOXY	FLG ANSI 125 / 150	NA	NA	NA	125	WATER	60	ZERO	
SW	HEADER BTWN PUMP NO. 4 AND 5 DISCHARGE	30	30	80	DI	CL54	CERAMIC	EPOXY	FLG ANSI 125 / 150	PLUG VALVE - MOTORIZED (PV-108)	NA	NA	125	WATER	60	ZERO	VALVE JOINTS SAME AS PIPE JOINTS, UNLESS OTHERWISE SHOWN
SW	HEADER BTWN PUMP NO. 3 AND 4 DISCHARGE	36	30	80	DI	CL54	CERAMIC	EPOXY	FLG ANSI 125 / 150	NA	NA	NA	125	WATER	60	ZERO	
SW	HEADER BTWN PUMP NO. 2 AND 3 DISCHARGE	48	30	80	DI	CL54	CERAMIC	EPOXY	FLG ANSI 125 / 150	NA	NA	NA	125	WATER	60	ZERO	
SW	HEADER FROM PUMP NO. 2 DISCHARGE TO OUTFALL FORCE MAIN	54	30	80	DI	CL54	CERAMIC	EPOXY	FLG ANSI 125 / 150	NA	NA	NA	125	WATER	60	ZERO	
SW	OUTFALL FORCE MAIN (BURIED)	54	30	80	DI	CL54	CERAMIC	EPOXY	FLG ANSI 125 / 150	PLUG VALVE - MANUAL (PV-109)	NA	NA	-	-	-	-	TEST WITH AIR AT MANUFACTURER RECOMMENDED PRESSURE
SW	CS FORCE MAIN (BURIED)	18	30	80	DI	CL54	CERAMIC	EPOXY	FLG ANSI 125 / 150	NA	NA	NA	-	-	-	-	TEST WITH AIR AT MANUFACTURER RECOMMENDED PRESSURE

PUMP SCHEDULE

TAG NO.	DESCRIPTION	LOCATION	TYPE	DUTY POINT			MOTOR DATA	
				FLOW (GPM)	TDH (FT)	MIN EFF. %	HP	DRIVE TYPE
SP-101	MAIN STORMWATER PUMP NO. 1	WET WELL	SUBMERSIBLE SOLID-HANDLING	25,000	46	75	385	VFD
SP-102	MAIN STORMWATER PUMP NO. 2	WET WELL	SUBMERSIBLE SOLID-HANDLING	25,000	46	75	385	VFD
SP-103	MAIN STORMWATER PUMP NO. 3	WET WELL	SUBMERSIBLE SOLID-HANDLING	25,000	46	75	385	VFD
SP-104	MAIN STORMWATER PUMP NO. 4	WET WELL	SUBMERSIBLE SOLID-HANDLING	25,000	46	75	385	VFD
SP-105	JOCKEY STORMWATER PUMP NO. 5	WET WELL	SUBMERSIBLE SOLID-HANDLING	7,000	34	75	110	VFD
SP-106	JOCKEY STORMWATER PUMP NO. 6	WET WELL	SUBMERSIBLE SOLID-HANDLING	7,000	34	75	110	VFD
SP-107	SUMP PUMP NO. 7	VALVE VAULT	SUBMERSIBLE SOLID-HANDLING	45	-	-	1	-
SP-108	SUMP PUMP NO. 8	FLOW METER VAULT NO. 1	SUBMERSIBLE SOLID-HANDLING	45	-	-	1	-
SP-109	SUMP PUMP NO. 9	FLOW METER VAULT NO. 2	SUBMERSIBLE SOLID-HANDLING	45	-	-	1	-

BAR SCREEN SCHEDULE

TAG NO.	DESCRIPTION	LOCATION	MATERIAL	BAR SPACING	MOUNTING ANGLE	BAR THICKNESS
BS-101	STATIC BAR SCREEN NO. 1	SCREENING CHAMBER	STAINLESS STEEL	3"	60°	1/2"
BS-102	STATIC BAR SCREEN NO. 2	SCREENING CHAMBER	STAINLESS STEEL	3"	60°	1/2"
BS-103	STATIC BAR SCREEN NO. 3	SCREENING CHAMBER	STAINLESS STEEL	3"	60°	1/2"

STOP LOG SCHEDULE

TAG NO.	DESCRIPTION	LOCATION	FRAME TYPE	FRAME MATERIAL	STOP LOG SIZE	NO. REQ'D	STOP LOG MATERIAL
SL-101	STOP LOG NO. 1	SCREENING CHAMBER	STOP LOG GROOVE	ALUMINUM	8"W x 6"H x 76"L	12	ALUMINUM
SL-102	STOP LOG NO. 2	SCREENING CHAMBER	STOP LOG GROOVE	ALUMINUM	8"W x 6"H x 76"L	0	ALUMINUM
SL-103	STOP LOG NO. 3	SCREENING CHAMBER	STOP LOG GROOVE	ALUMINUM	8"W x 6"H x 76"L	0	ALUMINUM

FLOW METER SCHEDULE

TAG NO.	DESCRIPTION	LOCATION	TYPE	SIZE (IN)
FM-101	FLOW METER NO. 1	FLOW METER VAULT NO. 1	ELECTROMAGNETIC FLOW METER	54
FM-102	FLOW METER NO. 2	FLOW METER VAULT NO. 2	ELECTROMAGNETIC FLOW METER	18

REV	DATE	BY	DESCRIPTION

SCALE: NO SCALE

WARNING: 0 ½ 1 — IF THIS BAR DOES NOT MEASURE 1" THEN DRAWING IS NOT TO SCALE

DATE: JULY 31, 2019
DRAWN BY: Z HALSTEAD
DESIGNED BY: L LIANG
CHECKED BY:
APPROVED BY:

60% DESIGN
NOT FOR CONSTRUCTION

This document is an interim document and not suitable for construction. As an interim document, it may contain data that is potentially inaccurate or incomplete and is not to be relied upon without the express written consent of the preparer.

Stantec

LYNN WATER & SEWER COMMISSION

LYNN WATER AND SEWER COMMISSION

PHASE 3 WEST LYNN SEWER SEPARATION

MECHANICAL
EQUIPMENT SCHEDULE

SHEET M-02

195130174

BY: HALSTEAD, ZACHARY
PLOT DATE: Friday, July 26, 2019
DWG FILE: C:\pwworkdir\d0537463\PHASE 3_BSS_M_M02.dwg

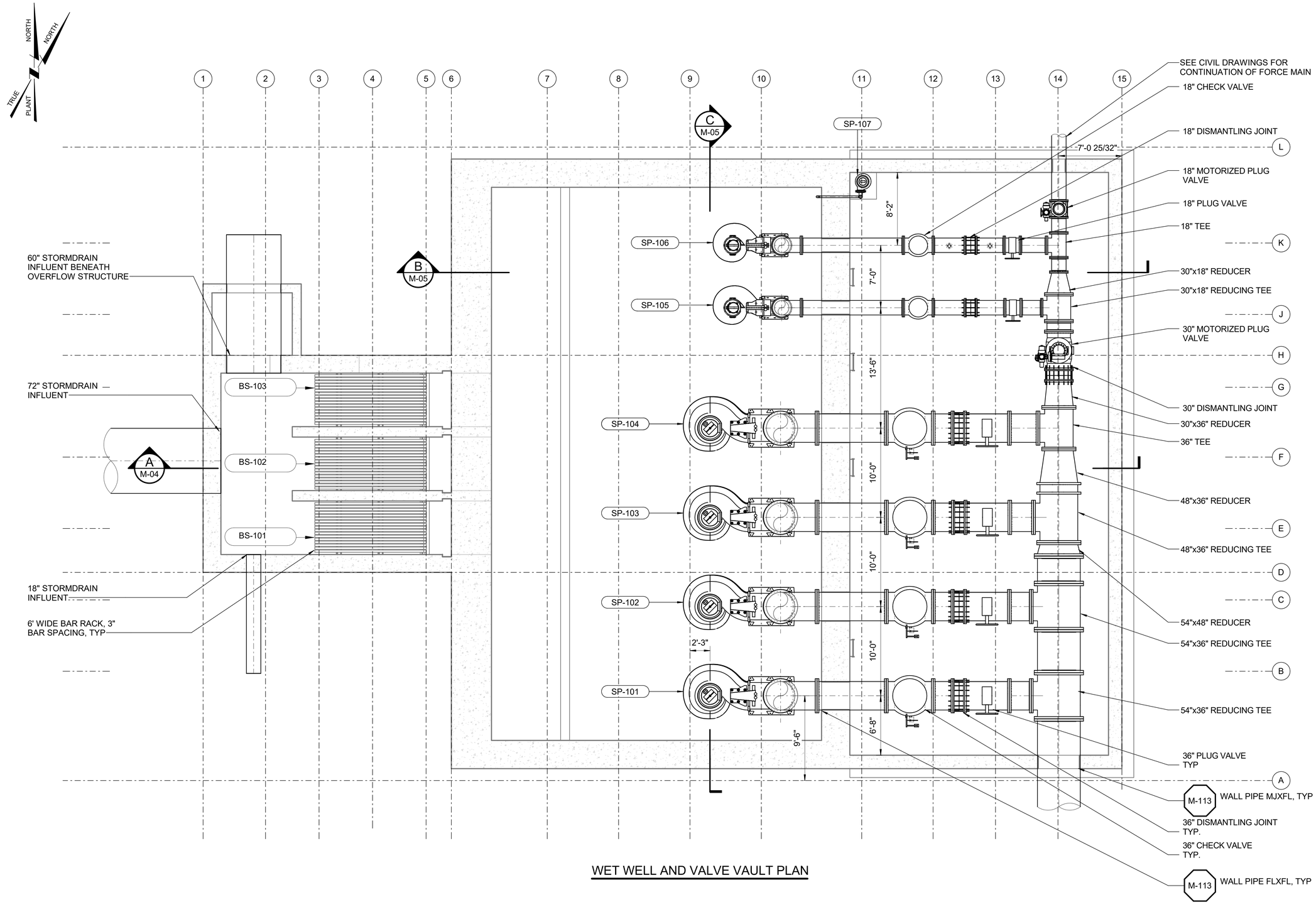

WET WELL AND VALVE VAULT PLAN

REV	DATE	BY	DESCRIPTION

SCALE: 3/16" = 1'-0"

WARNING: 0 ½ 1 — IF THIS BAR DOES NOT MEASURE 1" THEN DRAWING IS NOT TO SCALE

DATE: JULY 31, 2019
DRAWN BY: S HATHAWAY
DESIGNED BY: L LIANG
CHECKED BY:
APPROVED BY:

60 % DESIGN
NOT FOR CONSTRUCTION

This document is an interim document and not suitable for construction. As an interim document, it may contain data that is potentially inaccurate or incomplete and is not to be relied upon without the express written consent of the preparer.

Stantec

LYNN WATER & SEWER COMMISSION

LYNN WATER AND SEWER COMMISSION

PHASE 3 WEST LYNN SEWER SEPARATION

MECHANICAL
WET WELL PLAN

SHEET
M-03

195130174

PLOT DATE: 7/26/2019 10:09:59 AM
BY: S HATHAWAY
B:\d0537428\Lynn_Process_Model.rvt

SHEET KEY NOTES

A. COORDINATE WITH PUMP MANUFACTURER TO PROVIDE AN INCREASER AS NECESSARY TO MATCH PUMP DISCHARGE TO 36-IN DIA. DISCHARGE PIPING.

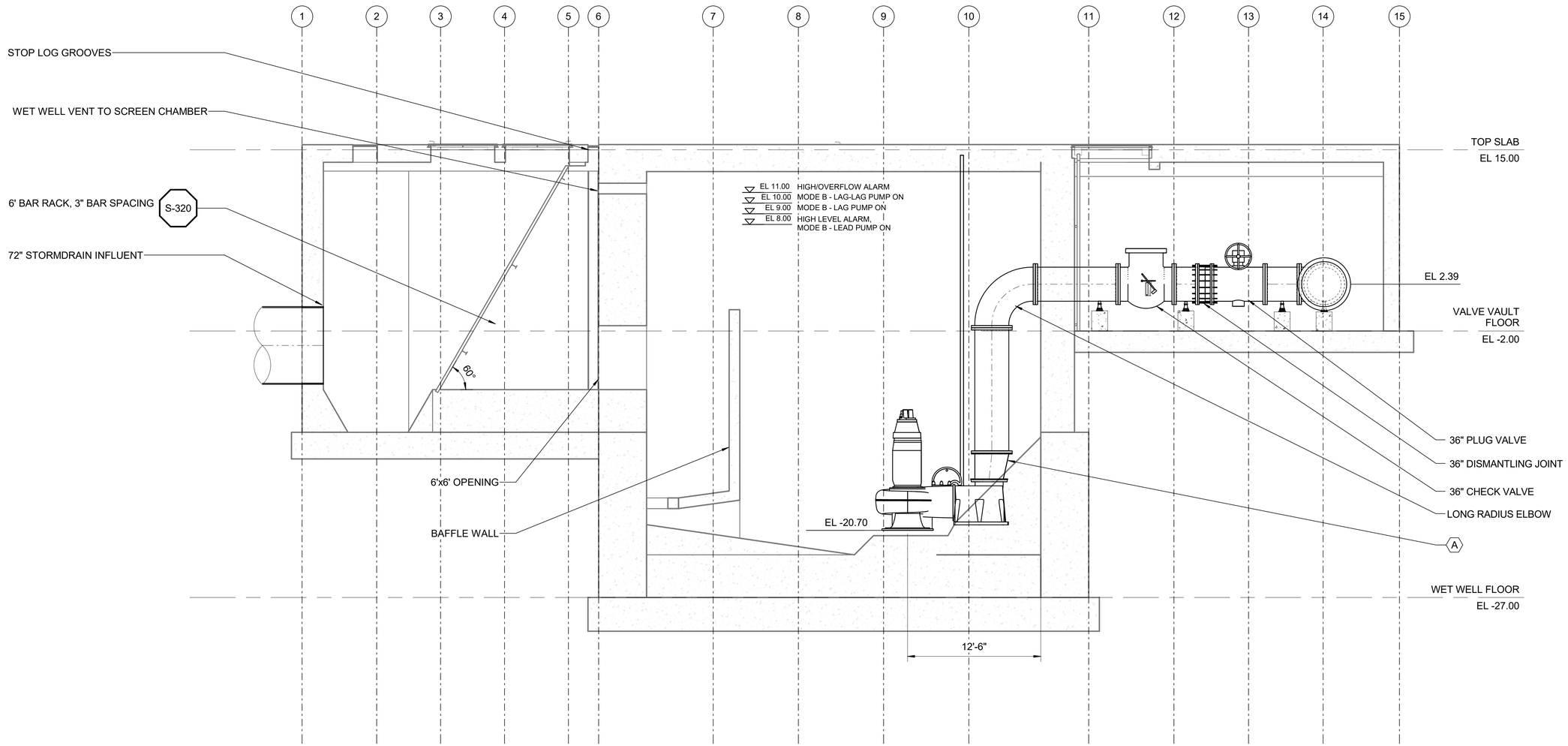

A / M-03 SECTION

0 4 8 12

SCALE: 3/16" = 1'-0"

REV	DATE	BY	DESCRIPTION

SCALE 3/16" = 1'-0"

WARNING 0 ½ 1 IF THIS BAR DOES NOT MEASURE 1" THEN DRAWING IS NOT TO SCALE

DATE JULY 31, 2019
DRAWN BY S HATHAWAY
DESIGNED BY L LIANG
CHECKED BY
APPROVED BY

60 % DESIGN
NOT FOR CONSTRUCTION

This document is an interim document and not suitable for construction. As an interim document, it may contain data that is potentially inaccurate or incomplete and is not to be relied upon without the express written consent of the preparer.

Stantec

LYNN WATER & SEWER COMMISSION

LYNN WATER AND SEWER COMMISSION

PHASE 3 WEST LYNN SEWER SEPARATION

MECHANICAL
WET WELL SECTIONS - I

SHEET M-04

195130174

PLOT DATE: 7/26/2019 10:10:00 AM BY: S HATHAWAY

B:\d0537428\Lynn_Process_Model.rvt

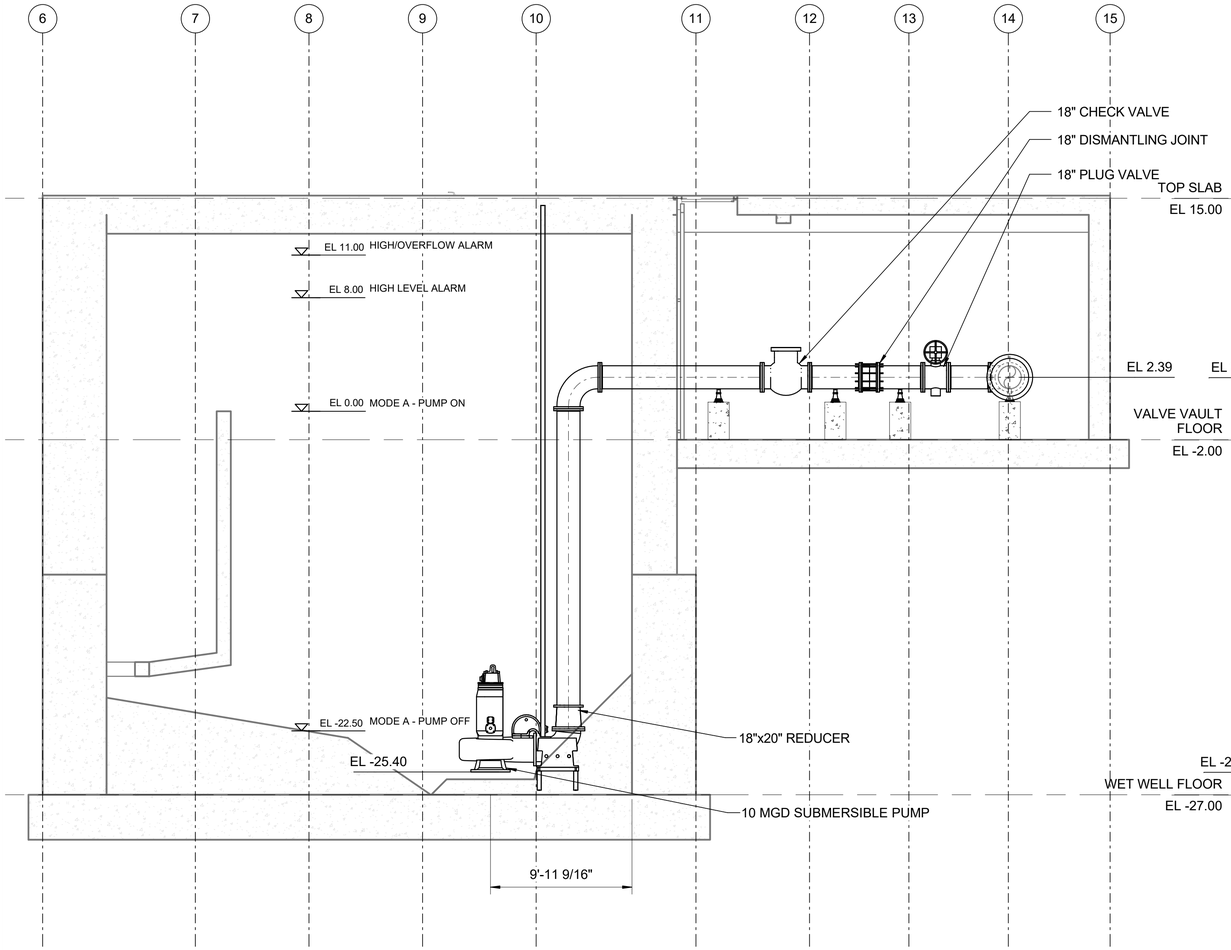

B M-03 SECTION

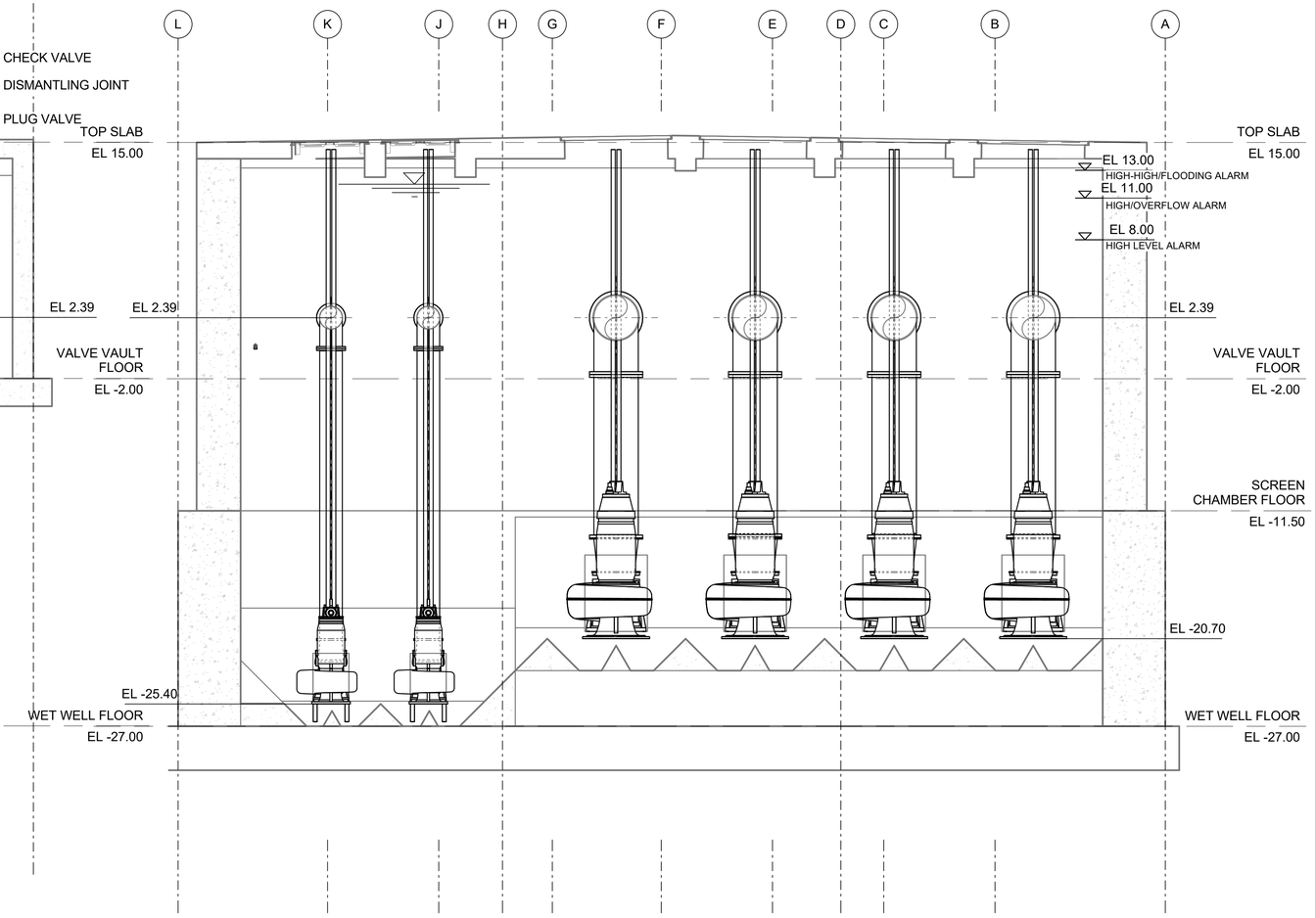

C M-03 SECTION

0 4 8 12
SCALE: 3/16" = 1'-0"

BY: S HATHAWAY

PLOT DATE: 7/26/2019 10:10:02 AM

B:\d0537428\Lynn_Process_Model.rvt

REV	DATE	BY	DESCRIPTION

SCALE 3/16" = 1'-0"

WARNING 0 ½ 1 IF THIS BAR DOES NOT MEASURE 1" THEN DRAWING IS NOT TO SCALE

DATE JULY 31, 2019
DRAWN BY S HATHAWAY
DESIGNED BY L LIANG
CHECKED BY
APPROVED BY

60 % DESIGN
NOT FOR CONSTRUCTION
This document is an interim document and not suitable for construction. As an interim document, it may contain data that is potentially inaccurate or incomplete and is not to be relied upon without the express written consent of the preparer.

Stantec

LYNN WATER & SEWER COMMISSION

LYNN WATER AND SEWER COMMISSION

PHASE 3 WEST LYNN SEWER SEPARATION

MECHANICAL
WET WELL SECTIONS - II

SHEET M-05

195130174

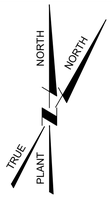

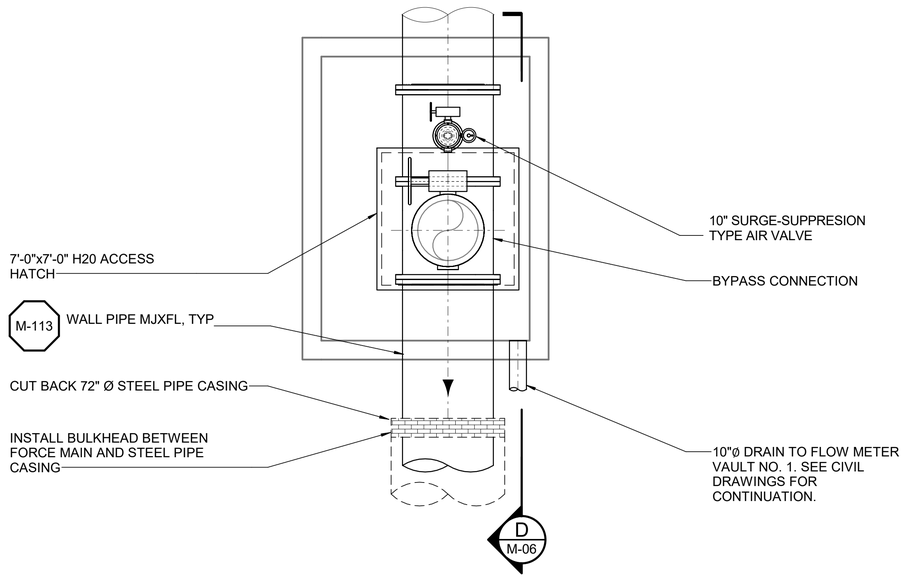

FLOW BYPASS CONNECTION VAULT PLAN

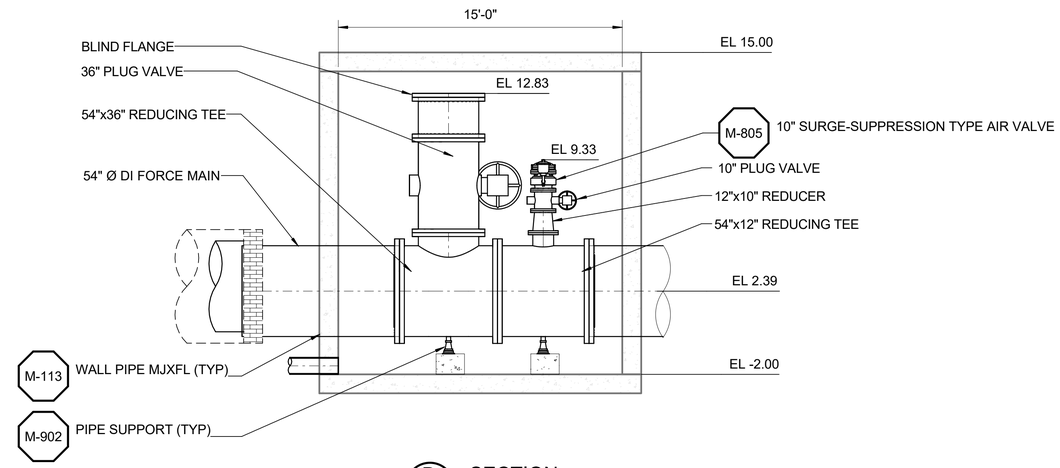

D M-06 SECTION

0 4 8
SCALE: 1/4" = 1'-0"

REV	DATE	BY	DESCRIPTION

SCALE 1/4" = 1'-0"

WARNING 0 ½ 1 IF THIS BAR DOES NOT MEASURE 1" THEN DRAWING IS NOT TO SCALE

DATE JULY 31, 2019
DRAWN BY S HATHAWAY
DESIGNED BY L LIANG
CHECKED BY
APPROVED BY

60 % DESIGN
NOT FOR CONSTRUCTION
This document is an interim document and not suitable for construction. As an interim document, it may contain data that is potentially inaccurate or incomplete and is not to be relied upon without the express written consent of the preparer.

Stantec

LYNN WATER & SEWER COMMISSION

LYNN WATER AND SEWER COMMISSION
PHASE 3 WEST LYNN SEWER SEPARATION
MECHANICAL
FLOW BYPASS CONNECTION VAULT PLAN AND SECTION

SHEET M-06

195130174

PLOT DATE: 7/26/2019 10:10:02 AM BY: S HATHAWAY
B:\d0537428\Lynn_Process_Model.rvt

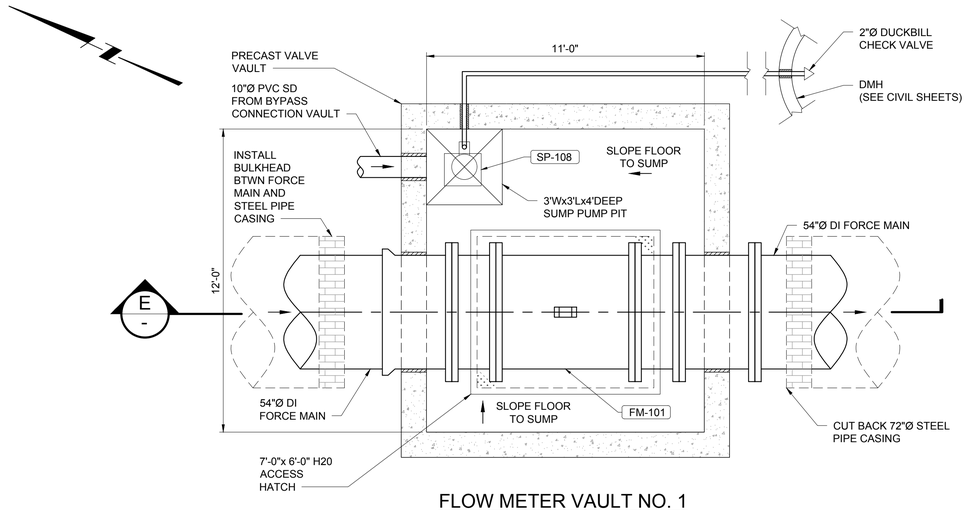

FLOW METER VAULT NO. 1
PLAN

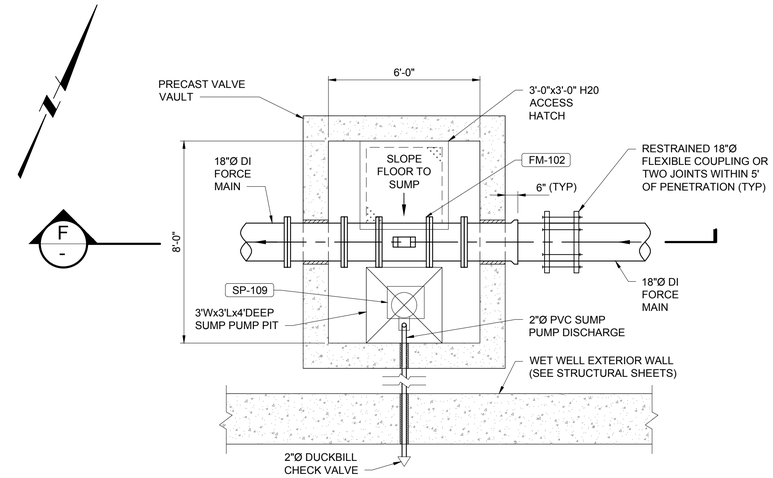

FLOW METER VAULT NO. 2
PLAN

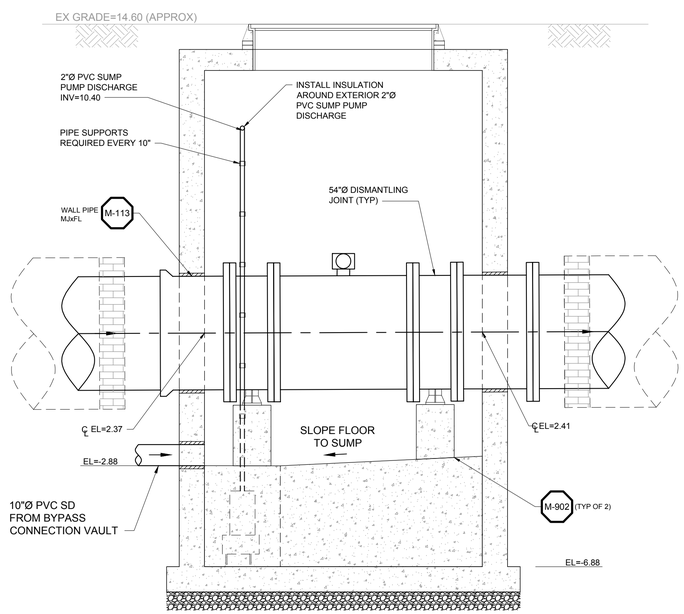

E
-
SECTION

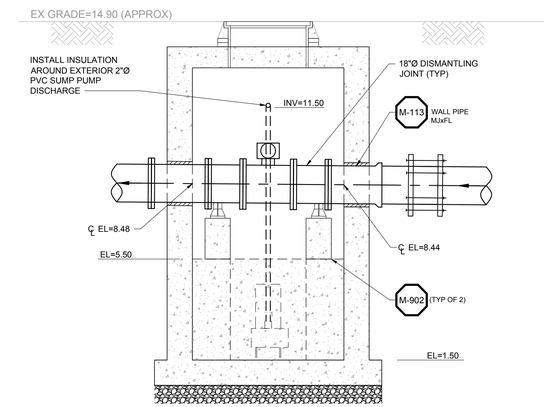

F
-
SECTION

BY: HALSTEAD, ZACHARY

PLOT DATE: Friday, July 26, 2019

DWG FILE: C:\pwworkdir\d0537463\PHASE 3_BSS_M_M07.dwg

REV	DATE	BY	DESCRIPTION

SCALE
1"=3'

WARNING
0 ½ 1
IF THIS BAR DOES NOT MEASURE 1" THEN DRAWING IS NOT TO SCALE

DATE JULY 31, 2019
DRAWN BY Z HALSTEAD
DESIGNED BY L LIANG
CHECKED BY
APPROVED BY

60% DESIGN
NOT FOR CONSTRUCTION

This document is an interim document and not suitable for construction. As an interim document, it may contain data that is potentially inaccurate or incomplete and is not to be relied upon without the express written consent of the preparer.

Stantec

LYNN WATER & SEWER COMMISSION

LYNN WATER AND SEWER COMMISSION

PHASE 3 WEST LYNN SEWER SEPARATION

MECHANICAL
FLOW METER VAULTS PLANS AND SECTIONS

SHEET
M-07

195130174

ABBREVIATIONS

A	ANCHOR
AFF	ABOVE FINISHED FLOOR
APD	AIR PRESSURE DROP
ATV	ATMOSPHERIC VENT
AVE	AVERAGE
B	BERTH
BLDG	BUILDING
BTU	BRITISH THERMAL UNIT
BTUH	BTU PER HOUR
BOP	BOTTOM OF PIPE
CA	COMPRESSED AIR
CF	CUBIC FEET
CFM	CUBIC FEET PER MINUTE
CL	CENTERLINE
CO	CLEAN-OUT
CONC	CONCRETE
CONN	CONNECTION
CONTR	CONTRACTOR
D	DRAIN OR DEPTH
DD	DRY DOCK
DEG	DEGREE
DIA	DIAMETER
DIM	DIMENSION
DN	DOWN
EA	EACH OR EXHAUST AIR
EAT	ENTERING AIR TEMPERATURE
EJ	EXPANSION JOINT
EL, ELEV	ELEVATION
ELEC	ELECTRICAL
EXIST	EXISTING
EXP	EXPANSION
F	FAHRENHEIT
FC	FLEXIBLE CONNECTION
FPM	FEET PER MINUTE
FRP	FIBERGLASS REINFORCED PLASTIC
FT	FEET
G	GUIDE
GA	GAUGE
GAL	GALLONS
GALV	GALVANIZED
GPM	GALLONS PER MINUTE
H	HEIGHT
HD	HEAD
HOR	HORIZONTAL
HP	HORSEPOWER OR HIGH POINT
HR	HOUR
HZ	HERTZ (FREQUENCY)
ID	INSIDE DIAMETER
IN	INCHES
INV	INVERT
KW	KILOWATT
L	LENGTH
LAT	LEAVING AIR TEMPERATURE
LB	POUND
LF	LINEAR FEET
LP	LOW POINT
LT	LEFT
MAWP	MAXIMUM ALLOWABLE WORKING PRESSURE
MAX	MAXIMUM
MBH	THOUSAND BTUH
MECH	MECHANICAL
MFR	MANUFACTURER
MH	MANHOLE
MHW	MEAN HIGH WATER
MIN	MINIMUM
N/A	NOT APPLICABLE
NC	NORMALLY CLOSED
NIC	NOT IN CONTRACT
NO	NORMALLY OPEN
No.	NUMBER
NPT	NATIONAL PIPE THREAD
NTS	NOT TO SCALE
OD	OUTSIDE DIAMETER
PCF	POUNDS PER CUBIC FOOT
PD	PRESSURE DROP
PG	PRIMARY GUIDE
PH	PHASE
POS	PROVIDED BY OTHER SECTION
PRV	PRESSURE REDUCING VALVE
PS	POUNDS PER SQUARE INCH
PSIA	POUNDS PER SQUARE INCH ABSOLUTE
PSID	POUNDS PER SQUARE INCH DIFFERENTIAL
PSIG	POUNDS PER SQUARE INCH GAUGE
PT	PUMP TRAP
PVC	POLYVINYL CHLORIDE
QTY	QUANTITY
REQ'D	REQUIRED
RT	RIGHT
SC	SERVICE CONNECTION
SCH	SCHEDULE
SF	SQUARE FEET
SQ	SQUARE
SST	STAINLESS STEEL
STA	STATION
STMH	STEAM MANHOLE
STL	STEEL
TEMP	TEMPERATURE
TOP	TOP OF PIPE
TYP	TYPICAL
V	VENT OR VOLTS (ELECTRICAL)
VEL	VELOCITY
VERT	VERTICAL
VIF	VERIFY IN FIELD
W	WATER OR WATT (ELECTRICAL)
W/	WITH
WC	WATER COLUMN
WG	WATER GAUGE
WPD	WATER PRESSURE DROP

GENERAL SYMBOLOGY

X / X — SECTION DESIGNATION / DRAWING NUMBER

LIMIT OF SECTION

1 — REVISION NUMBER

T — TEMPERATURE SENSOR OR THERMOSTAT

NEW WORK INDICATED BY A HEAVY LINEWIEGHT

NEW WORK -PIPE IN TRENCH

EXISTING WORK INDICATED BY A LIGHT LINEWIEGHT

FUTURE EXISTING WORK BY PWD-ME PROJECTS

SCHEDULED EQUIPMENT TAG REQUIRING ELECTRICAL CONNECTIVITY

XX — EQUIPMENT TYPE
XX — EQUIPMENT NUMBER

SCHEDULED EQUIPMENT TAG NOT REQUIRING ELECTRICAL CONNECTIVITY

XX — EQUIPMENT TYPE
XX — EQUIPMENT NUMBER

DETAIL CALLOUT

X — DETAIL NUMBER
X — DRAWING NUMBER OF DETAIL LOCATION

NOTE CALLOUT

X — BASE BID NEW WORK KEYNOTE NUMBER

PIPING LEGEND

RISER UP

RISER DOWN

BRANCH-TOP CONNECTION

TEE DOWN

TEE

UNION

FLANGE

PIPE REDUCER

DIRECTION OF FLOW

DIRECTION OF DOWNWARD PITCH

CAP ON END OF PIPE

STRAINER

BALL VALVE

CHECK VALVE

DUCTWORK

RECTANGULAR DUCT W=WIDTH, D=DEPTH (INCHES UNLESS NOTED OTHERWISE) AS VIEWED — W D 10x6

ROUND DUCT (DIA=INSIDE DIAMETER) — 10"ø

RECTANGULAR SUPPLY DUCT UP THROUGH ROOF

SUPPLY DUCT UP THROUGH FLOOR

SUPPLY DUCT DOWN

STANDARD RADIUS ELBOW (R = W) SUPPLY/RETURN/EXHAUST — R, W

RETURN/EXHAUST DUCT UP THROUGH ROOF

RETURN/EXHAUST DUCT UP THROUGH FLOOR

RETURN/EXHAUST DUCT DOWN

RECTANGULAR DUCT TO ROUND SUPPLY/RETURN/ EXHAUST — 10x6, 6"ø

HVAC LEGEND

PIPE - DOWN

PIPE - UP

AFMS — AIR FLOW MONITORING STATION

BDD — BACKDRAFT DAMPER

CBBD — COUNTER BALANCED BACKDRAFT DAMPER

SGD — SLIDE GATE DAMPER

VD — MANUAL VOLUME DAMPER

FD — SELF-CLOSING FIRE DAMPER W/ ACCESS DOOR

ASD — AUTOMATIC SMOKE DAMPER W/ ACCESS DOOR

SFD — COMBINATION SMOKE/FIRE DAMPER W/ ACCESS DOOR

SD — DUCT MOUNTED SMOKE DETECTOR

MD — MOTORIZED DAMPER W/ACCESS DOOR

RETURN OR EXHAUST AIR FLOW

SUPPLY AIR FLOW

PROPELLER FAN

PARALLEL BLADE DAMPER W/ TWO POSITION ACTUATOR

DWG FILE: C:\pwworkdir\d0551730\PHASE 3_BSS_M-001.dwg
PLOT DATE: Wednesday, March 07, 2018
BY: KOSHIMA, MITSU

REV	DATE	BY	DESCRIPTION

SCALE: NOT TO SCALE

WARNING: 0 ½ 1 — IF THIS BAR DOES NOT MEASURE 1" THEN DRAWING IS NOT TO SCALE

DATE: JULY 31, 2019
DRAWN BY: K. BUCHER
DESIGNED BY: K. BUCHER
CHECKED BY: A. HADDAD
APPROVED BY:

60% DESIGN
NOT FOR CONSTRUCTION
This document is an interim document and not suitable for construction. As an interim document, it may contain data that is potentially inaccurate or incomplete and is not to be relied upon without the express written consent of the preparer.

Stantec

LYNN WATER & SEWER COMMISSION

LYNN WATER AND SEWER COMMISSION
PHASE 3 WEST LYNN SEWER SEPARATION
BUILDING MECHANICAL
LEGEND, ABBREVIATIONS & GENERAL NOTES

SHEET HG-01

195130174

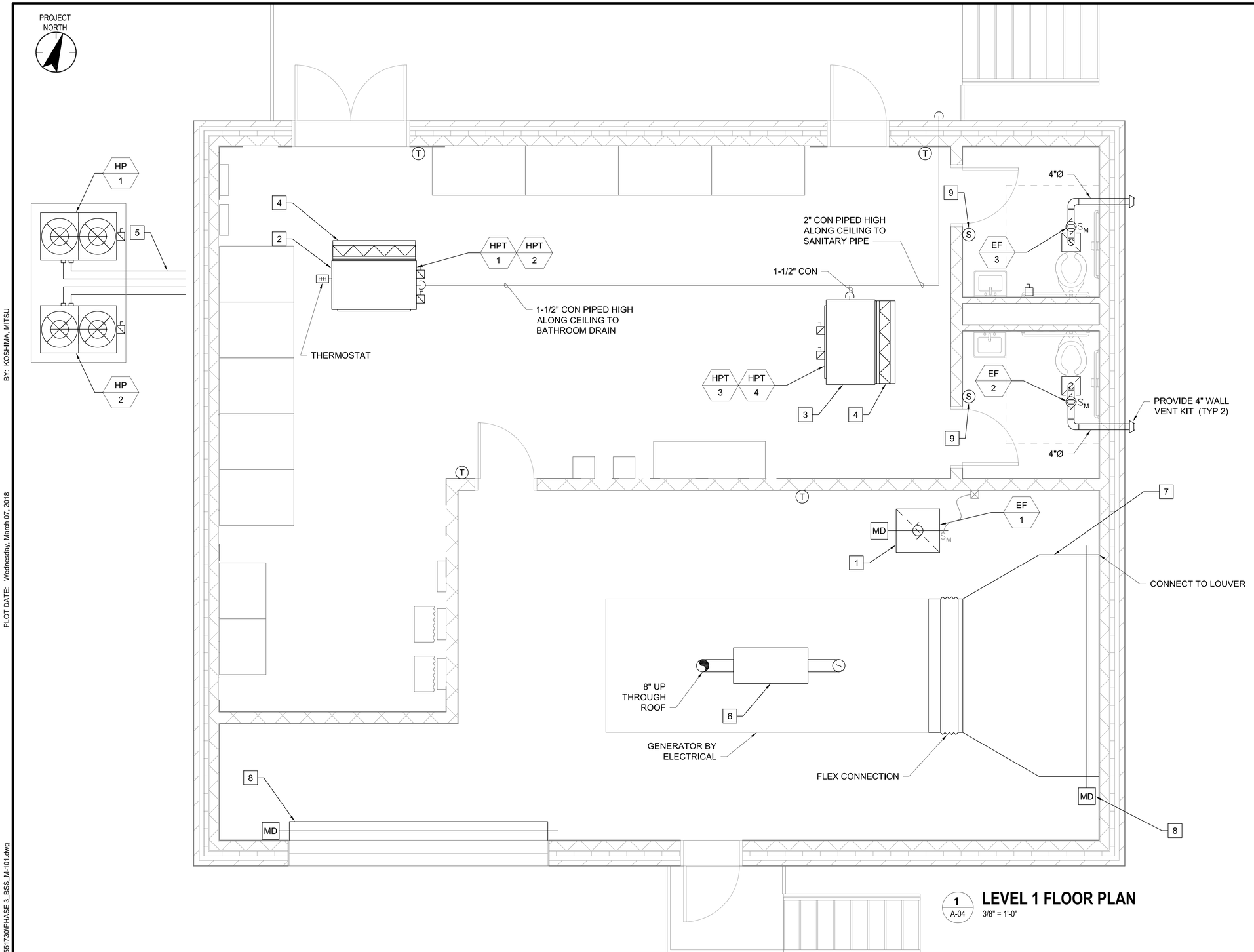

1 A-04 **LEVEL 1 FLOOR PLAN**

3/8" = 1'-0"

NOTES:

1. 28x28 DUCT UP TO ROOF MOUNTED EXHAUST FAN. PROVIDE WMS AT INLET OF DUCTWORK. EF-1 SHALL BE INTERLOCKED WITH THE GENERATOR INTAKE MOTORIZED DAMPER AND SHALL OPEN WHEN THE ROOM THERMOSTAT CALL FOR VENTILATION.
2. HEAT PUMP SYSTEM SHALL BE OF ONE MANUFACTURER. HPT-1 AND HPT-2 SHALL BE INSTALLED OVER ONE ANOTHER.
3. HEAT PUMP SYSTEM SHALL BE OF ONE MANUFACTURER. HPT-3 AND HPT-4 SHALL BE INSTALLED OVER ONE ANOTHER.
4. PROVIDE WMS AND RETURN AIR FILTER ON THE INTAKE OF EACH UNIT.
5. 2 - 3/8" RL & 2 - 1-1/8" RS REFRIGERANT LINES THROUGH EXTERIOR WALL FROM HP-1 AND HP-2. PIPE SIZES BASED ON SCHEDULED MANUFACTURER. CONTRACTOR TO VERIFY PIPE SIZES WITH APPROVED MANUFACTURER.
6. 8" FLEX CONN AND SILENCER PROVIDED BY ELEC SUB CONTRACTOR. INSTALLED BY MECH SUB CONTRACTOR. 8" EXH THRU CEILING AND 14' ABOVE ROOF. CONTRACTOR SHALL INSTALL THE EXHAUST IN ACCORDANCE TO THE GENERATOR'S MANUFACTURER.
7. RADIATOR DUCT CONNECTION. CONTRACTOR TO VERIFY SIZE WITH FINAL GENERATOR SELECTION.
8. INTERLOCK 12' WIDE BY 12' TALL MOTORIZED DAMPER TO GENERATOR STARTUP RELAY. CONTRACTOR SHALL USE FAST ACTING, SPRING OPEN ACTUATORS THAT SHALL OPEN THE DAMPER.
9. CONNECT FAN TO LIGHT SWITCH. WHEN LIGHT IS ON, FAN IS ON.

0 2' 4' 6'

REV	DATE	BY	DESCRIPTION

SCALE: AS SHOWN

WARNING: 0 ½ 1 — IF THIS BAR DOES NOT MEASURE 1" THEN DRAWING IS NOT TO SCALE

DATE: JULY 31, 2019
DRAWN BY: K. BUCHER
DESIGNED BY: K. BUCHER
CHECKED BY: A. HADDAD
APPROVED BY:

60% DESIGN
NOT FOR CONSTRUCTION

This document is an interim document and not suitable for construction. As an interim document, it may contain data that is potentially inaccurate or incomplete and is not to be relied upon without the express written consent of the preparer.

Stantec

LYNN WATER & SEWER COMMISSION

LYNN WATER AND SEWER COMMISSION

PHASE 3 WEST LYNN SEWER SEPARATION

BUILDING MECHANICAL FLOOR PLAN

SHEET H-01

195130174

DWG FILE: C:\pwworkdir\d0551730\PHASE 3_BSS_M-101.dwg
PLOT DATE: Wednesday, March 07, 2018
BY: KOSHIMA, MITSU

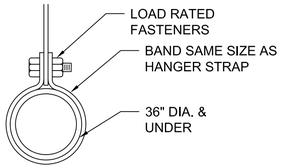

HANGER STRAPS OR RODS		
MAX. DUCT DIA.	HANGER	MAX. SPACING FEET
20"	ONE 1" x 22 GA. STRAP	10

NOTES:

1. ALL SUPPORTS SHALL BE GALVANIZED STEEL FOR STEEL DUCT, STAINLESS STEEL FOR STAINLESS STEEL DUCT, OR ALUMINUM FOR ALUMINUM DUCT.
2. HANGERS MUST NOT DEFORM DUCT SHAPE.
3. ATTACHEMENTS TO STRUCTURE SHALL BE PER SMACNA.

ROUND METAL DUCT HANGERS

SCALE: NTS H-X 1

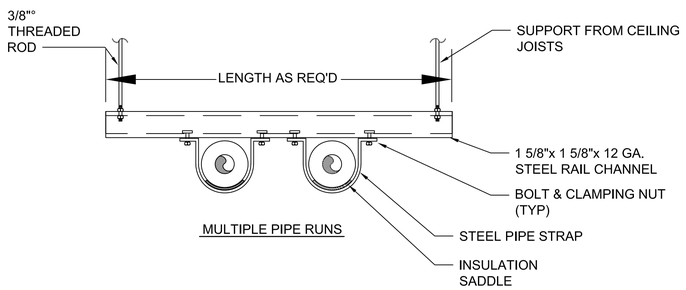

HORIZONTAL PIPE SUPPORT

SCALE: NTS H-X 2

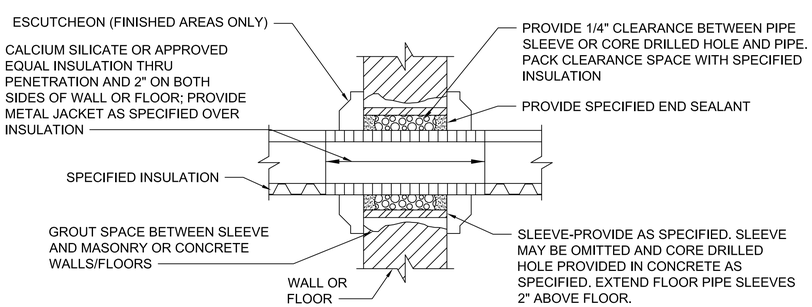

NOTES:

1. AT FIRE RATED PARTITIONS ADD ADDITIONAL LAYER OF FIRE SAFING INSULATION AROUND PENETRATIONS SO AS TO FILL CAVITY.
2. DUCT AND PIPE PENETRATIONS THROUGH CORRIDOR WALLS ABOVE THE CEILING ARE TO BE FIRE STOPPED AROUND THE PENETRATION.

INTERIOR WALL-FLOOR PIPE PENETRATIONS

SCALE: NTS H-X 3

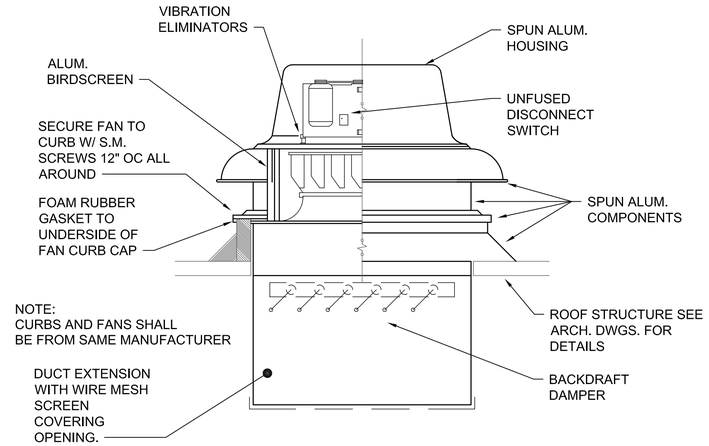

ROOF MOUNTED CENTRIFUGAL EXHAUST FAN

SCALE: NTS H-X 4

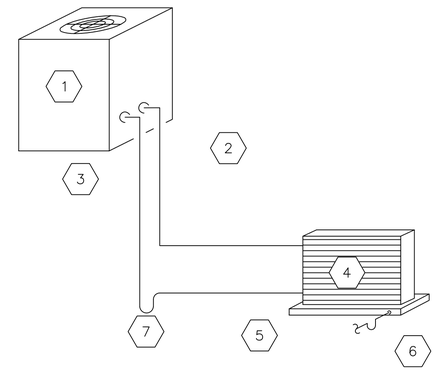

1. CONDENSING UNIT
2. LIQUID LINE
3. INSULATED SUCTION LINE
4. COOLING COIL
5. DRAIN PAN
6. DRAIN LINE–TRAP & ROUTE TO DRAIN OR CONDENSATE PUMP
7. TRAP

NOTE:

1. CONFIRM ALL PIPE SIZES WITH UNIT MANUFACTURER BASED ON ACTUAL FIELD PIPE ROUTING.
2. CONTROL EQUIPMENT, APPURTENANCES, AND TRAPS AS RECOMMENDED BY UNIT MANUFACTURER (SUBMIT IN SHOP DRAWING).

REFRIGERANT PIPING COMPONENT SCHEMATIC

SCALE: NTS H-X 6

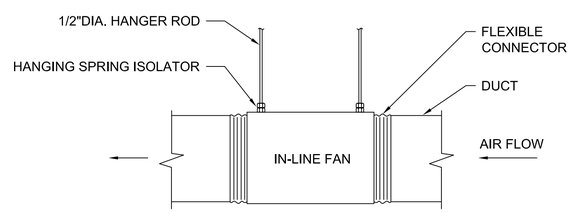

CENTRIFUGAL IN-LINE FAN DETAIL

SCALE: NTS H-X 5

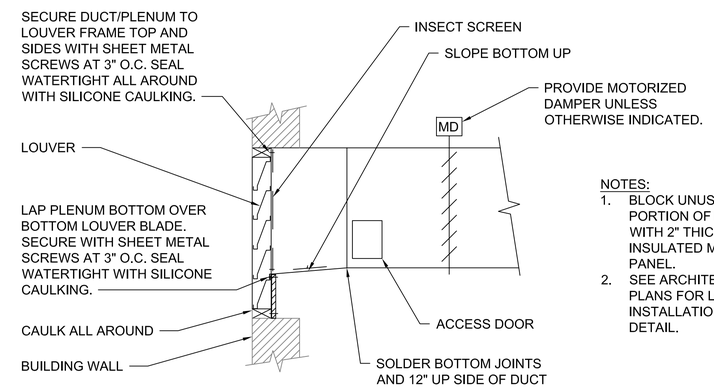

NOTES:

1. BLOCK UNUSED PORTION OF LOUVER WITH 2" THICK INSULATED METAL PANEL.
2. SEE ARCHITECTURAL PLANS FOR LOUVER INSTALLATION DETAIL.

LOUVER/PLENUM CONNECTION DETAIL

SCALE: NTS H-X 7

BY: KOSHIMA, MITSU

PLOT DATE: Wednesday, March 07, 2018

DWG FILE: C:\pwworkdir\d0551730\PHASE 3_BSS_M-501.dwg

REV	DATE	BY	DESCRIPTION

SCALE: NOT TO SCALE

WARNING: 0 ½ 1 — IF THIS BAR DOES NOT MEASURE 1" THEN DRAWING IS NOT TO SCALE

DATE	JULY 31, 2019
DRAWN BY	K. BUCHER
DESIGNED BY	K. BUCHER
CHECKED BY	A. HADDAD
APPROVED BY	

60% DESIGN
NOT FOR CONSTRUCTION

This document is an interim document and not suitable for construction. As an interim document, it may contain data that is potentially inaccurate or incomplete and is not to be relied upon without the express written consent of the preparer.

Stantec

LYNN WATER & SEWER COMMISSION

LYNN WATER AND SEWER COMMISSION

PHASE 3 WEST LYNN SEWER SEPARATION

BUILDING MECHANICAL DETAILS

SHEET H-02

195130174

HEAT PUMP UNIT (OUTDOOR)

UNIT NO.	LOCATION	COOLING (SEE NOTE 1)		HEATING (SEE NOTE 4)		REFRIGERANT TYPE	REFRIGERANT CHARGE (LBS)	REFRIGERANT PIPING		OPERATING RANGE (SEE NOTE 3)		ELECTRICAL					MANUFACTURER AND MODEL NUMBER (AS STANDARD)	REMARKS
		TOTAL COOLING (BTU/H)	POWER INPUT (kW)	TOTAL HEATING (BTU/H)	POWER INPUT (WATTS)			LIQUID (IN,OD)	VAPOR (IN,OD)	COOLING (°F DB)	HEATING (°F DB)	RATED AMPS (MOP)	RATED AMPS (RLA)	V	HZ	PH		
HP-1	ROOF	69000	4.06	77000	5.10	R-410A	25.80000000	3/8	3/4			70	20.70	208-230	60	1	DAIKIN - RELQ72TATJU	SEE NOTES
HP-2	ROOF	69000	4.06	77000	5.10	R-410A	25.80000000	3/8	3/4			70	20.70	208-230	60	1	DAIKIN - RELQ72TATJU	SEE NOTES

NOTES:

1. UNIT SHALL ALLOW FOR 100% COOLING CAPACITY AT 0°F.
2. INSTALL PER MANUFACTURERS SPECIFICATIONS AND DESIGN.
3. BASED ON STANDARD CONDITIONS OF INDOOR: 80°F DB / 67°F WD, OUTDOOR: 95°F DB AND HEATING MODE @ INDOOR: 70°F DB, OUTDOOR: 47°F DB / 43°F WB.
4. UNIT SHALL BE CAPABLE OF 65,450 BTU/H OF HEATING AT -4°F.

HEAT PUMP TERMINAL UNIT (INDOOR)

UNIT NO.	LOCATION	TOTAL COOLING (BTU/H)	TOTAL HEATING (BTU/H)	POWER INPUT (WATTS)	REFRIGERANT TYPE	REFRIGERANT PIPING		CONDENSATE PIPING	ELECTRICAL				MANUFACTURER AND MODEL NUMBER (AS STANDARD)	REMARKS
						LIQUID (IN,OD)	VAPOR (IN,OD)	CONDENSATE (IN,ID)	RATED AMPS (A)	V	HZ	PH		
HPT-1	ELECTRICAL ROOM	36000	40000	331	R-410A	3/8	5/8	1	15	208	60	1	DAIKIN - FXSQ36TAVJU	SEE NOTES
HPT-2	ELECTRICAL ROOM	36000	40000	331	R-410A	3/8	5/8	1	15	208	60	1	DAIKIN - FXSQ36TAVJU	SEE NOTES
HPT-3	ELECTRICAL ROOM	36000	40000	331	R-410A	3/8	5/8	1	15	208	60	1	DAIKIN - FXSQ36TAVJU	SEE NOTES
HPT-4	ELECTRICAL ROOM	36000	40000	331	R-410A	3/8	5/8	1	15	208	60	1	DAIKIN - FXSQ36TAVJU	SEE NOTES

NOTES:

1. INCLUDE WIRED REMOTE CONTROLLER (POWERED FROM UNIT) AND SINGLE CONDENSATE PUMP FOR BOTH HPT-1 & HPT-2.
2. INSTALL PER MANUFACTURERS SPECIFICATIONS AND DESIGN.

EXHAUST FAN SCHEDULE

TAG	LOCATION	CFM	FAN TYPE	E.S.P. (IN. WG)	WHEEL			MOTOR					MANUFACTURER AND MODEL NUMBER (AS STANDARD)	NOTES
					DIA. (IN.)	TYPE	DRIVE	RPM	BHP	HP	V	PH		
EF-1	ROOF	6845	ROOF TOP	0.25	30	CENTRIFUGAL	BELT	-	0.67	3/4	120	1	TWIN CITY FAN - 300 BCLH	1
EF-2	ELECTRICAL ROOM	110	INLINE	0.2	6	CENTRIFUGAL	DIRECT	3000	-	20 WATTS	120	1	FANTECH - 4XL EC	1
EF-3	ELECTRICAL ROOM	110	INLINE	0.2	6	CENTRIFUGAL	DIRECT	3000	-	20 WATTS	120	1	FANTECH - 4XL EC	1

NOTES:

1. PROVIDE OSHA APPROVED OUTLET GUARDS. ALL MOUNTING HARDWARE SHALL BE CORROSION RESISTANT. PROVIDE SELF ALIGNING HEAVY DUTY BEARINGS W/EXTENDED LUBE TUBES THAT SHALL BE RE-LUBRICATEABLE FOR CONTINUOUS SERVICE WITH A MINIMUM L10 LIFE OF 50,000 HRS. PROVIDE FLEXIBLE INLET CONNECTORS TO DUCT, CURB ADAPTER AND MOTORIZED EA DAMPER. DISCONNECT SWITCH PROVIDE BY ELECTRICAL.

ABBREVIATIONS

AFF	ABOVE FINISH FLOOR
AP	ACCESS PANEL
B	BOILER
BLDG	BUILDING
CI	CAST IRON
CL	CENTER LINE
CMU	CONCRETE MASONRY UNIT
CO	CLEANOUT
CONC	CONCRETE
CONT	CONTINUATION
CPVC	CHLORINATED POLYVINYL CHLORIDE
CW	COLD WATER
DHW	DOMESTIC HOT WATER
DI	DUCTILE IRON
DN	DOWN THROUGH SUB OR FLOOR
DWG	DRAWING
DWH	DOMESTIC WATER HEATER
EL.	ELEVATION
EWH	ELECTRIC WATER HEATER
FCO	FLOOR CLEANOUT
FD	FLOOR DRAIN
FS	FLOW SWITCH
FT	FOOT/FEET
FV	FLUSH VALVE
G	NATURAL GAS PIPING
G.C.	GENERAL CONTRACTOR
GALV	GALVANIZED
GPF	GALLON PER FLUSH
GPM	GALLON PER MINUTE
HB	HOSE BIB
HP	HORSE POWER
HW	HOT WATER
HZ	HERTZ
ID	INSIDE DIAMETER
INV	INVERT
IW	INDIRECT WASTE
KW	KILOWATTS
MAX	MAXIMUM
MIN	MINIMUM
MV	MIXING VALVE
NPCW	NON-POTABLE COLD WATER
NTS	NOT TO SCALE
OD	OUTSIDE DIAMETER
P-#	FIXTURE NUMBER
P	PUMP
PD	PUMP DISCHARGE
PG	PRESSURE GAGE
PH	PHASE
PLBG	PLUMBING
PRV	PRESSURE REDUCING/ REGULATING VALVE
PS	PUMP STATION
PSI	POUNDS PER SQUARE INCH
PVC	POLYVINYL CHLORIDE
RD	ROOF DRAIN
RED	REDUCER
RL	RAIN LEADER
RM	ROOM
RPM	REVOLUTIONS PER MINUTE
RPBFP	REDUCED PRESSURE BACKFLOW PREVENTER
S	SANITARY
SA	SHOCK ABSORBER
SBP	SEAL BOOSTER PUMP
SP	SUMP PUMP
SPD	SUMP PUMP DISCHARGE
SPEC	SPECIFICATION
SST	STAINLESS STEEL
T&P	TEMPERATURE AND PRESSURE RELIEF VALVE
TD	TRENCH DRAIN
TDH	TOTAL DYNAMIC HEAD
TP	TRAP PRIMER
TYP	TYPICAL
V	VENT
VB	VACUUM BREAKER
VIF	VERIFY IN FIELD
VS	VENT STACK
VTR	VENT THRU ROOF
W	WASTE OR WATT
WCO	WALL CLEANOUT
WG	WATER GAGE
WH	WALL HYDRANT
WHA	WATER HAMMER ARRESTOR

GENERAL SYMBOLOGY

LIMIT OF PLUMBING WORK

NEW WORK INDICATED BY A HEAVY LINEWIEGHT

WORK BY OTHERS INDICATED BY A MEDIUM LINEWIEGHT

HIDDEN WORK INDICATED BY A LIGHT LINEWIEGHT

1 — REVISION NUMBER

SCHEDULED EQUIPMENT TAG REQUIRING ELECTRICAL CONNECTIVITY

X — EQUIPMENT TYPE

X — EQUIPMENT NUMBER

SCHEDULED EQUIPMENT TAG NOT REQUIRING ELECTRICAL CONNECTIVITY

X — EQUIPMENT TYPE

X — EQUIPMENT NUMBER

DETAIL CALLOUT

X — DETAIL NUMBER

X — SHEET NUMBER OF DETAIL LOCATION

NEW WORK NOTE CALLOUT

X — DRAWING NOTE NUMBER

DEMOLITION NOTE CALLOUT

X — DRAWING NOTE NUMBER

PIPING TYPES

CW	POTABLE COLD WATER
CW	POTABLE COLD WATER BELOW GROUND
HW	POTABLE HOT WATER
HW	POTABLE HOT WATER BELOW GROUND
NPCW	NON-POTABLE COLD WATER
NPCW	NON-POTABLE COLD WATER BELOW GROUND
S OR W	SANITARY OR WASTE ABOVE GROUND
S OR W	SANITARY OR WASTE BELOW GROUND
V	VENT ABOVE GROUND
V	VENT BELOW GROUND
RD	ROOF DRAIN ABOVE GROUND
RD	ROOF DRAIN BELOW GROUND
G	NATURAL GAS PIPING

PIPE LEGEND

FD	FLOOR DRAIN
	CLEANOUT
	FLOOR CLEANOUT
	P-TRAP
	ELBOW UP OR RISE
	ELBOW DOWN OR DROP
	CAP OR END OF PIPE
HB	HOSE BIBB
WH	WALL HYDRANT
	TEE LOOKING DOWN
	TEE LOOKING UP
	UNION
	WATER HAMMER ARRESTOR/SHOCK ABSORBER
	FLOW IN DIRECTION OF ARROW
	DIRECTION OF SLOPE
	STRAINER
	BALL VALVE
	GAS BALL VALVE
	GATE VALVE
	CHECK VALVE
	GAS COCK
	TEMPERATURE/PRESSURE RELIEF VALVE
	VACUUM RELIEF VALVE
	AQUASTAT
	THERMOMETER
	PRESSURE REDUCING/REGULATING VALVE
	PRESSURE GAUGE

PLUMBING GENERAL NOTES:

1. ALL PLUMBING WORK SHALL BE DONE IN ACCORDANCE WITH 248 CMR AND OTHER APPLICABLE STATE CODES.
2. OBTAIN ALL PERMITS AND PAY ALL FEES ASSOCIATED WITH THIS WORK PRIOR TO COMMENCEMENT.
3. COORDINATE LOCATION OF PIPING, EQUIPMENT, AND ASSOCIATED APPURTENANCES WITH ALL OTHER TRADES (CIVIL, STRUCTURAL, ARCHITECTURAL, PROCESS, FIRE PROTECTION, HVAC, AND ELECTRICAL).
4. FOR ALL PIPING SIZES NOT SHOWN ON PLANS REFER TO DETAILS AND SCHEMATICS. FOR ALL PIPING CONTINUATIONS TO EQUIPMENT AND VALVE LOCATIONS NOT SHOWN ON PLANS, REFER TO DETAILS AND PERTINENT CIVIL DRAWINGS.
5. ALL WORK SHOWN ON PIPING SCHEMATICS BUT NOT ON PLANS, OR VICE VERSA, SHALL BE INCLUDED AS IF SHOWN ON BOTH.
6. ALL PIPING AND EQUIPMENT SHOWN DIAGRAMMATICALLY AND EXACT LOCATION SHALL BE DETERMINED IN THE FIELD.
7. PROVIDE ACCESS TO ALL EQUIPMENT FOR MAINTENANCE AND HOUSEKEEPING.
8. FURNISH ACCESS PANELS FOR ACCESS AND MAINTENANCE FOR INSTALLATION UNDER THE RELATED TRADES.
9. NO STRUCTURAL MEMBERS SHALL BE CUT OR DRILLED WITHOUT THE APPROVAL OF THE AUTHORITY.
10. ALL PIPING SHALL BE SUPPORTED FROM BUILDING STRUCTURE.
11. RUN WATER PIPE ON THE WARM SIDE OF BUILDING INSULATION. NO WATER PIPING SHALL BE RUN IN EXTERIOR WALLS.
12. PROVIDE DRAWOFFS WITH BALL VALVE, HOSE END VACUUM BREAKER, CAP & CHAIN AT ALL DOMESTIC WATER LOW POINTS AND PITCH PIPING TO DRAIN.
13. PROVIDE ACCESSIBLE SHUTOFF VALVES ON ALL BRANCH PIPING AND ON ALL SUPPLY PIPING TO INDIVIDUAL FIXTURES AND EQUIPMENT.
14. DIELECTRIC FITTINGS, FLANGES, OR UNIONS SHALL BE USED WHERE PIPES OF DISSIMILAR METALS ARE CONNECTED.
15. ALL SANITARY WASTE AND ROOF DRAIN PIPING SHALL PITCH PER 248 CMR.
16. PROVIDE ACCESSIBLE CLEANOUTS AT THE BASE OF ALL STACKS, AS SHOWN, AND AS REQUIRED PER CODE.
17. FILED SUB BID PLUMBING CONTRACTOR SHALL PROVIDE FIRE STOPPING FOR ALL PENETRATIONS THROUGH FIRE WALLS AND FIRE RATED SEPARATIONS.
18. FILED SUB BID PLUMBING CONTRACTOR SHALL PROVIDE WATER RESISTANT SLEEVES AND SEALS FOR ALL PIPE PENETRATIONS THROUGH FLOORS AND WALLS.
19. PROVIDE TRAP PRIMERS FOR ALL FLOOR DRAINS.
20. SEE SPECIFICATIONS FOR OTHER REQUIREMENTS.

BY: KOSHIMA, MITSU

PLOT DATE: Wednesday, March 07, 2018

DWG FILE: C:\pwworkdir\d0551979\PHASE 3_BSS_P-001.dwg

REV	DATE	BY	DESCRIPTION

SCALE: AS SHOWN

WARNING: 0 ½ 1 — IF THIS BAR DOES NOT MEASURE 1" THEN DRAWING IS NOT TO SCALE

DATE: JULY 31, 2019
DRAWN BY: K. BUCHER
DESIGNED BY: K. BUCHER
CHECKED BY: A. HADDAD
APPROVED BY:

60% DESIGN
NOT FOR CONSTRUCTION
This document is an interim document and not suitable for construction. As an interim document, it may contain data that is potentially inaccurate or incomplete and is not to be relied upon without the express written consent of the preparer.

Stantec

LYNN WATER & SEWER COMMISSION

LYNN WATER AND SEWER COMMISSION

PHASE 3 WEST LYNN SEWER SEPARATION

PLUMBING
LEGEND, ABBREVIATIONS & GENERAL NOTES

SHEET
PG-01

195130174

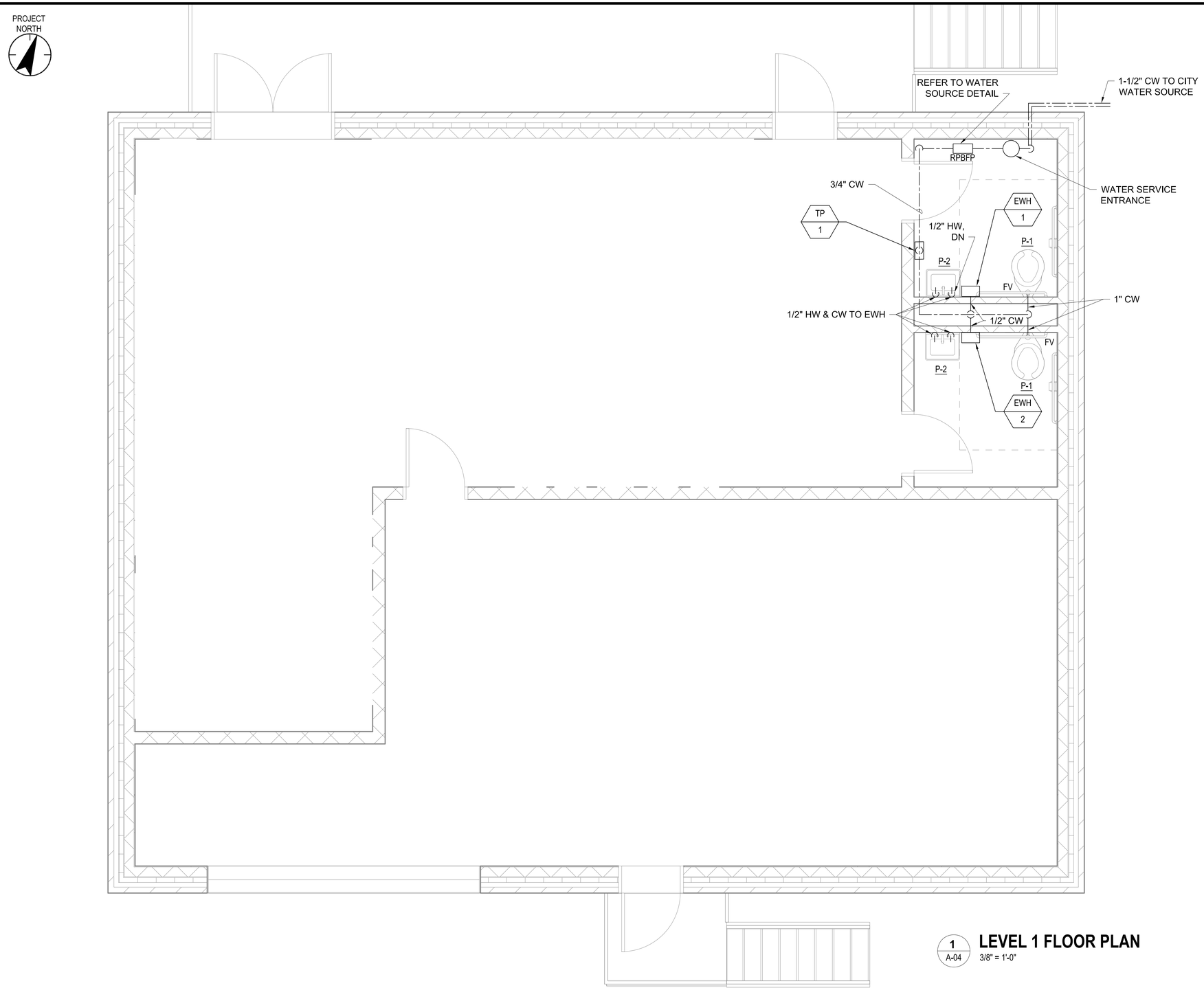

NOTES:

1. TRAP PRIMER WITH AIR GAP. RUN 1/2" O.D. COPPER TUBING FROM TRAP PRIMER TO EACH FLOOR DRAIN (DISTRIBUTION TUBING IS NOT SHOWN FOR CLARITY).
2. RUN 1/2" CW TO TRAP PRIMER FROM 3/4" CW PIPE.
3. INSTANTANEOUS HOT WATER HEATER SHALL BE LOCATED UNDER P-2.
4. REFER TO P-04 FOR PIPING DETAILS.

1 / A-04 **LEVEL 1 FLOOR PLAN**
3/8" = 1'-0"

0 2' 4' 6'

REV	DATE	BY	DESCRIPTION

SCALE: AS SHOWN

WARNING: 0 ½ 1 — IF THIS BAR DOES NOT MEASURE 1" THEN DRAWING IS NOT TO SCALE

DATE: JULY 31, 2019
DRAWN BY: K. BUCHER
DESIGNED BY: K. BUCHER
CHECKED BY: A. HADDAD
APPROVED BY:

60% DESIGN
NOT FOR CONSTRUCTION

This document is an interim document and not suitable for construction. As an interim document, it may contain data that is potentially inaccurate or incomplete and is not to be relied upon without the express written consent of the preparer.

Stantec

LYNN WATER & SEWER COMMISSION

LYNN WATER AND SEWER COMMISSION
PHASE 3 WEST LYNN SEWER SEPARATION
PLUMBING
DOMESTIC WATER FLOOR PLAN

SHEET P-01

195130174

DWG FILE: C:\pwworkdir\d0551979\PHASE 3_BSS_P-101.dwg
PLOT DATE: Wednesday, March 07, 2018
BY: KOSHIMA, MITSU

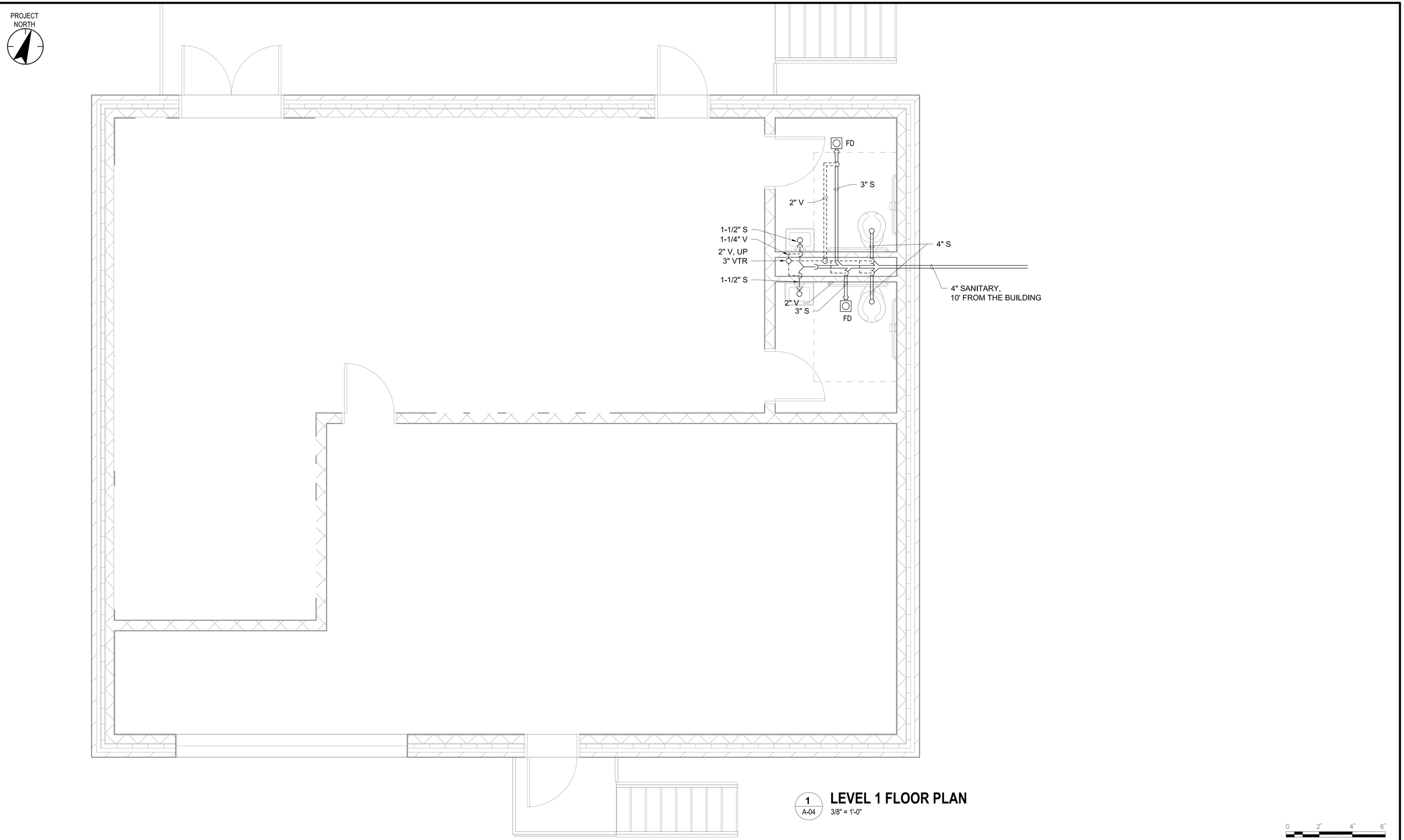

1 A-04 **LEVEL 1 FLOOR PLAN**
3/8" = 1'-0"

REV	DATE	BY	DESCRIPTION

SCALE: AS SHOWN

WARNING: 0 ½ 1 — IF THIS BAR DOES NOT MEASURE 1" THEN DRAWING IS NOT TO SCALE

DATE: JULY 31, 2019
DRAWN BY: K. BUCHER
DESIGNED BY: K. BUCHER
CHECKED BY: A. HADDAD
APPROVED BY:

60% DESIGN
NOT FOR CONSTRUCTION

This document is an interim document and not suitable for construction. As an interim document, it may contain data that is potentially inaccurate or incomplete and is not to be relied upon without the express written consent of the preparer.

Stantec

LYNN WATER & SEWER COMMISSION

LYNN WATER AND SEWER COMMISSION
PHASE 3 WEST LYNN SEWER SEPARATION
PLUMBING
SANITARY FLOOR PLAN

SHEET P-02

195130174

DWG FILE: C:\pwworkdir\d0551979\PHASE 3_BSS_P-102.dwg
PLOT DATE: Wednesday, March 07, 2018
BY: KOSHIMA, MITSU

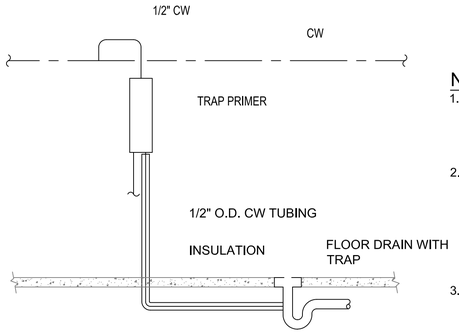

NOTES:

1. INSULATE CW LINES WITH 1/2" FLEXIBLE UNICELLULAR INSULATION.
2. AUTOMATIC PRIMING DEVICE SHALL BE EQUIPPED WITH SOLENOID VALVE AND VACUUM BREAKER.
3. TRAP PRIMER MAKE UP LINE SHALL HAVE CONTINUOUS SLOPE TO THE FLOOR DRAIN.

TRAP PRIMER DETAIL (1)

NOT TO SCALE

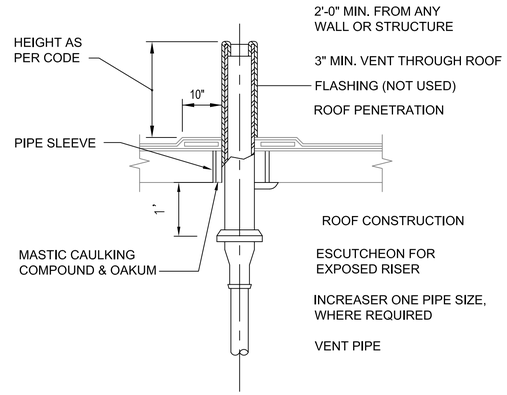

VENT TROUGH ROOF DETAIL (2)

NOT TO SCALE

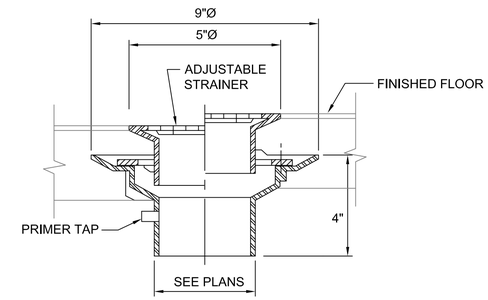

FLOOR DRAIN DETAIL (3)

NOT TO SCALE

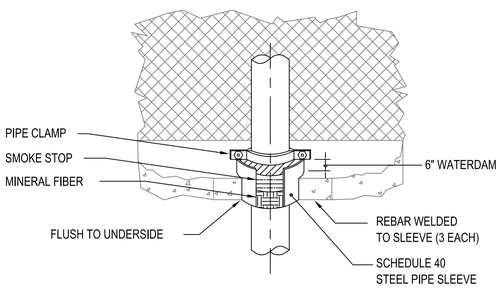

FLOOR PENETRATION DETAIL (4)

NOT TO SCALE

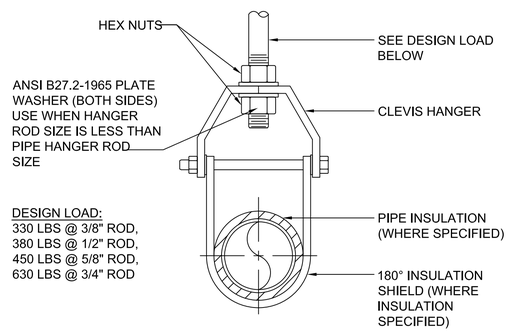

PIPE SUPPORT DETAIL (5)

NOT TO SCALE

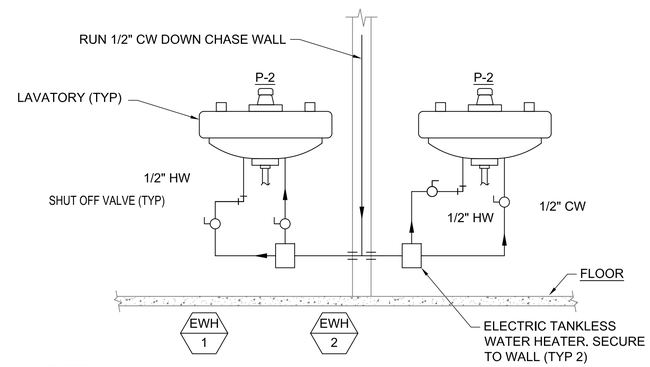

NOTES:

1. SCHEMATIC IS FOR SHOWING OVERALL ARRANGEMENT OF EQUIPMENT AND PIPING, REFER TO DRAWINGS P-02 FOR LOCATIONS OF HOT WATER HEATER AND LAVATORIES.

ELECTRIC WATER HEATER SCHEMATIC (6)

NOT TO SCALE P-02

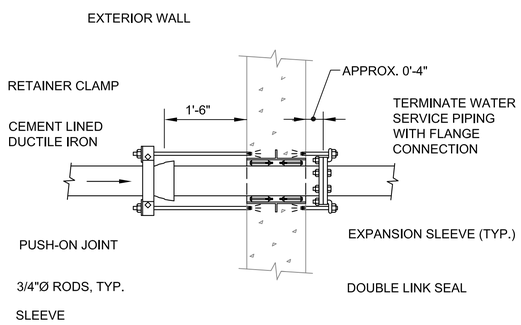

NOTE:
PROVIDE MIN. 5'-0" COVER OVER PIPE.

THROUGH WALL WATER ENTRANCE DETAIL (7)

NOT TO SCALE P-02

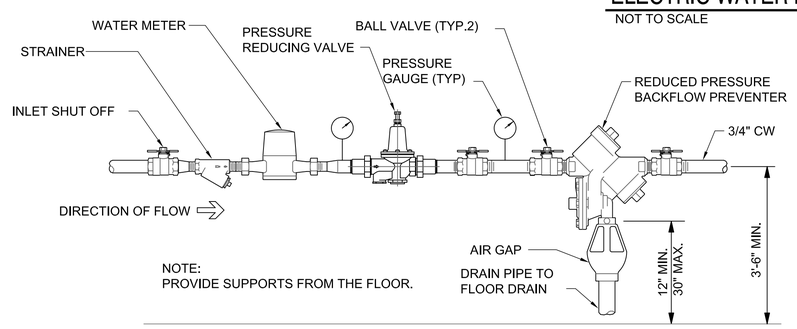

NOTE:
PROVIDE SUPPORTS FROM THE FLOOR.

WATER SERVICE ENTRANCE DETAIL (8)

NOT TO SCALE P-02

REV	DATE	BY	DESCRIPTION

SCALE: AS SHOWN

WARNING: 0 ½ 1 — IF THIS BAR DOES NOT MEASURE 1" THEN DRAWING IS NOT TO SCALE

DATE	JULY 31, 2019
DRAWN BY	K. BUCHER
DESIGNED BY	K. BUCHER
CHECKED BY	A. HADDAD
APPROVED BY	

60% DESIGN
NOT FOR CONSTRUCTION

This document is an interim document and not suitable for construction. As an interim document, it may contain data that is potentially inaccurate or incomplete and is not to be relied upon without the express written consent of the preparer.

Stantec

LYNN WATER & SEWER COMMISSION

LYNN WATER AND SEWER COMMISSION

PHASE 3 WEST LYNN SEWER SEPARATION

PLUMBING DETAILS

SHEET P-03

195130174

DWG FILE: C:\pwworkdir\d0551979\PHASE 3_BSS_P-501.dwg PLOT DATE: Wednesday, March 07, 2018 BY: KOSHIMA, MITSU

PLUMBING FIXTURE SCHEDULE

FIXTURE NO.	FIXTURE TYPE	PIPE SIZE				REMARKS
		SOIL WASTE	COLD WATER	HOT WATER	VENT	
P-1	ADA WATER CLOSET	4"	1"	-	2"	1.28 GPF, ADA FLOOR MOUNTED FLUSH VALVE
P-2	ADA LAVATORY	1-1/2"	1/2"	1/2"	1-1/4"	WALL MOUNTED, ELECTRONIC CENTERSET FAUCET, THERMOSTATIC MIXING VALVE
FD	FLOOR DRAIN	3"	-	-	1-1/2"	WITH TRAP PRIMER

NOTES:

TRAP PRIMER SCHEDULE

TAG NO.	LOCATION	TYPE	NUMBER OF OUTLETS	ELECTRICAL DATA		NOTES
				VOLTS	PHASE	
TP-1	ELECTRICAL HOUSE	ELECTRONIC	6	120	1	

NOTES:

1 AIR GAP
2 1/2" WATER SOURCE CONNECTION
3 PRE-SET 24 HOUR TIMER

INSTANTANEOUS ELECTRIC WATER HEATER

UNIT NO.	TAG	LOCATION	SERVICE	TEMP RISE	AMPS	ELECTRIC			REMARKS
						KW	VOLT	PH	
EWH-1	EWH-01	BATHROOM	LAVATORY	100°F @ .5 GPM	7	3.5	208	1	1 2
EWH-2	EWH-02	BATHROOM	LAVATORY	100°F @ .5 GPM	7	3.5	208	1	1 2

NOTES:

1. PROVIDE PRESSURE RELIEF VALVE
2. SINGLE LAVATORY HEATER

EWH
-

BY: KOSHIMA, MITSU

PLOT DATE: Wednesday, March 07, 2018

DWG FILE: C:\pwworkdir\d0551979\PHASE 3_BSS_P-601.dwg

REV	DATE	BY	DESCRIPTION

SCALE: AS SHOWN

WARNING: 0 ½ 1 — IF THIS BAR DOES NOT MEASURE 1" THEN DRAWING IS NOT TO SCALE

DATE: JULY 31, 2019
DRAWN BY: K. BUCHER
DESIGNED BY: K. BUCHER
CHECKED BY: A. HADDAD
APPROVED BY:

60% DESIGN
NOT FOR CONSTRUCTION

This document is an interim document and not suitable for construction. As an interim document, it may contain data that is potentially inaccurate or incomplete and is not to be relied upon without the express written consent of the preparer.

Stantec

LYNN WATER & SEWER COMMISSION

LYNN WATER AND SEWER COMMISSION

PHASE 3 WEST LYNN SEWER SEPARATION

PLUMBING SCHEDULES
SCHEDULES

SHEET
P-04

195130174

POWER LEGEND

DIAGRAM	PLAN	DESCRIPTION
		SURFACE MOUNTED PANELBOARD
TX KVA VPR1 – VSEC PH , W K	T	TRANSFORMER, SIZE AS NOTED, DELTA CONNECTION- PRIMARY. WYE CONNECTION GROUNDED-SECONDARY (LOW VOLTAGE).
	G	GENERATOR, RATINGS AND CONNECTIONS AS NOTED
FRAME TRIP	CB	LOW VOLTAGE AIR OR MOLDED CASE CIRCUIT BREAKER, 3 POLE UNLESS OTHERWISE NOTED.
*		COMBINATION MOTOR CIRCUIT PROTECTOR AND MAGNETIC MOTOR STARTER, FULL VOLTAGE NON-REVERSING UNLESS OTHERWISE NOTED: FVR - FULL VOLTAGE REVERSING * RVNR - REDUCED VOLTAGE NON-REVERSING RVAT - REDUCED VOLTAGE AUTOTRANSFORMER RVSS - REDUCED VOLTAGE SOLID STATE 2S1W - TWO SPEED, ONE WINDING 2S2W - TWO SPEED, TWO WINDING (DIAGRAMATICALLY SHOWN, CONTRACTOR SHALL FIELD LOCATE)
*		NON-FUSIBLE DISCONNECT SWITCH, 600 VOLT, 3 POLE * AMPERE RATING NOTED IF OTHER THAN 30A (DIAGRAMATICALLY SHOWN, CONTRACTOR SHALL FIELD LOCATE)
* **		FUSIBLE DISCONNECT SWITCH, 600 VOLT, 3 POLE, * AMPERE RATING AND FUSE SIZE AS NOTED ** AMPERE RATING NOTED IF OTHER THAN 30A FUSE RATING (DIAGRAMATICALLY SHOWN, CONTRACTOR SHALL FIELD LOCATE)
	$_{PM}$ 2	MANUAL MOTOR STARTER WITH THERMAL OVERLOAD HEATER, -1 POLE UNLESS OTHERWISE NOTED; "P" INDICATES WITH PILOT LIGHT; "2" INDICATES TWO POLE (DIAGRAMATICALLY SHOWN, CONTRACTOR SHALL FIELD LOCATE)
		DRAWOUT TYPE EQUIPMENT OR DEVICE
* A TO 5		CURRENT TRANSFORMER * QUANTITY A = PRIMARY AMPERES
* V TO 120		POTENTIAL TRANSFORMER * QUANTITY V = PRIMARY VOLTAGE

WIRING DEVICE LEGEND

XX	DUPLEX RECEPTACLE NEMA 5-20R
XX	DOUBLE DUPLEX RECEPTACLE NEMA 5-20R
TYPE CKT XX	SPECIAL PURPOSE RECEPTACLE NEMA TYPE AS INDICATED ON THE PLAN

MOUNT 18" AFF UNO
"C" - DENOTES MTD 6" ABOVE WORK SURFACE
"W" - DENOTES MTD 6" BELOW FINISH CEILING

GROUNDING LEGEND

G	GROUNDING COUNTERPOISE - (3) COPPER GROUND RODS AT 10'-0" ON CENTER
— G —	GROUNDING CONDUCTOR; 4/0 CU GND MINIMUM - UNLESS NOTED OTHERWISE
	GROUND ROD
	GROUND BAR - 2"H x 1/4" THICK x 24"L, MOUNTED 24" AFF WITH 2" SPACE BETWEEN GROUND BUS AND WALL
	GROUNDING ELECTRODE CONDUCTOR

LIGHTING LEGEND

LIGHT FIXTURE TYPE AS DESIGNATED ON LUMINAIRE SCHEDULE:

A 1 a — 1 = DENOTES PANELBOARD BRANCH CIRCUIT NUMBER

a = DENOTES FIXTURE CONTROLLED BY LOCAL SWITCH "a"

A = DENOTES FIXTURE TYPE PER LUMINAIRE SCHEDULE

● = EMERGENCY POWERED

SWITCHES LEGEND

MOUNT 48" AFF UNO

$a	SINGLE POLE SWITCH: "a" - DENOTES LIGHT FIXTURE CONTROL, TYPICAL
$3a	3-WAY SWITCH
$4a	4-WAY SWITCH
$Da	DIMMER SWITCH, SINGLE POLE
$D3a	DIMMER SWITCH, 3-WAY
$OS	OCCUPANCY SENSOR - WALL MOUNTED INTEGRAL SINGLE POLE SWITCH
S M	MOTOR OVERLOAD SWITCH

POWER LEGEND

	EXISTING WIRING AND CONDUIT TO BE REMOVED
	CONDUIT RUN HIDDEN
	CONDUIT RUN EXPOSED
	CONDUIT STUBBED 6" ABOVE ACCESSIBLE CEILING AT 90° ANGLE WITH BUSHED END
LP1-1	HOMERUN TO PANELBOARD "LP1" CIRCUIT No. 1. 2#12 & 1#12GND., 3/4"C. UNLESS OTHERWISE NOTED. MINIMUM SIZE No. 12AWG AND 3/4" CONDUIT UNLESS NOTED OTHERWISE.
J	JUNCTION BOX
	UTILITY POLE
MH	MANHOLE
HH	HAND HOLE
PB	PULL BOX
VFD	VARIABLE FREQUENCY DRIVE - REFER TO "MECHANICAL/ ELECTRICAL/PLUMBING" COORDINATION SCHEDULE.
ECB	ENCLOSED CIRCUIT BREAKER - NEMA 1 ENCLOSURE - AMPERAGE AND NO. OF POLES AS INDICATED.
EPO	EMERGENCY POWER OFF SWITCH

FIRE ALARM LEGEND

F	FIRE ALARM PULL STATION
	FIRE ALARM WALL MOUNTED STROBE - 15CD
30CD	FIRE ALARM HORN / STROBE
S	SMOKE DETECTOR

GENERAL NOTES

1. ALL SURFACE MOUNTED PANELS AND PANELBOARDS ON THE INSIDE OF THE EXTERIOR WALLS ABOVE GRADE OR IN OTHER LOCATIONS CONSIDERED AS DAMP OR WET, SHALL BE MOUNTED SO AS TO MAINTAIN A 1/4" AIR SPACE BETWEEN THE ENCLOSURE AND THE WALL.
2. LIGHTING FIXTURES SHALL BE MOUNTED ACCORDING TO THE MOUNTING HEIGHT GIVEN ON THE DRAWINGS, WITH THE DISTANCE BEING MEASURED FROM THE BOTTOM OF THE LIGHTING FIXTURE TO THE FINISHED FLOOR.
3. IN GENERAL CONDUIT ROUTING FOR EQUIPMENT AND DEVICES IS NOT SHOWN ON THE PLANS. THE CONTRACTOR SHALL BE RESPONSIBLE FOR ROUTING ALL CONDUITS WHICH SHALL INCLUDE CONDUITS SHOWN ON ONE-LINE AND RISER DIAGRAMS AND HOME-RUNS SHOWN ON PLAN DRAWINGS. REFER TO SPECIFICATIONS FOR MATERIALS AND INSTALLATION REQUIREMENTS.

ABBREVIATIONS

AFG	ABOVE FINISHED GRADE
AM	AMMETER
AS	AMMETER SWITCH
AUX	AUXILIARY
BKR	BREAKER
CO	CUT OFF SWITCH
CP	CONTROL PANEL
CPT	CONTROL POWER TRANSFORMER
CS	CONTROL SWITCH
CT	CURRENT TRANSFORMER
DAS	DATA ACQUISITION SYSTEM
ENC	IP TO VIDEO ENCODER
ER	ELECTRIC RESET
ETSW	ETHERNET SWITCH
FACP	FIRE ALARM CONTROL PANEL
FVNR	FULL VOLTAGE NON-REVERSING
FPP	FIBER PATCH PANEL
GALV	GALVANIZED
GEC	GROUNDING ELECTRODE CONDUCTOR
GND, G	GROUND
GFI	GROUND FAULT CIRCUIT INTERRUPTER
GSC	GROUNDED SERVICE CONDUCTOR
HV	HIGH VOLTAGE
IA	INTRUSION ALARM
I	INTERCOM
IT	INFORMATION TECHNOLOGY
K	KIRK INTERLOCK
KW	KILOWATT
ISW	ISOLATING SWITCH
LBS	LOAD BREAK SWITCH
LF	LINEAR FOOT
LP	LIGHTING PANEL
LV	LOW VOLTAGE
MAX	MAXIMUM
MIN	MINIMUM
MV	MEDIUM VOLTAGE
MMU	MICRO-PROCESSOR METERING UNIT
OHT	OVERHEAD TELEPHONE/COMMUNICATIONS
PAA	PERSONNEL ACKNOWLEDGMENT ALARM
PP	POWER PANEL
PRI	FIBER OPTIC CABLE PAIR 1
PT OR VT	POTENTIAL OR VOLTAGE TRANSFORMER
PC	PROGRAMMABLE CONTROLLER
PV	PHOTOVOLTAIC
PVC	POLYVINYLCHLORIDE
PQM	POWER QUALITY METER
RECEP	RECEPTACLE
RGS	RIGID GALVANIZED STEEL
RVNR	REDUCED VOLTAGE NON-REVERSING
T	TIME METER
TP	TRAP PRIMER
TYP	TYPICAL
VAR	VARMETER (ON LINE)
VM	VOLTMETER
VS	VOLTMETER SWITCH
WHM	WATTHOUR METER
WHDM	WATTHOUR DEMAND METER
WM	WATTMETER
WP	WEATHER PROOF
XP	EXPLOSION PROOF

PROJECT NOTES

1. THE CONTRACTOR SHALL FURNISH ALL LABOR, MATERIALS, TOOLS AND ALL OTHER EQUIPMENT REQUIRED TO INSTALL THE WORK SHOWN AND SPECIFIED. THE CONTRACTOR SHALL FURNISH AND INSTALL ALL ITEMS NECESSARY FOR A COMPLETE ELECTRICAL SYSTEM AND PLACE ALL EQUIPMENT IN PROPER WORKING ORDER. ALL MATERIALS SHALL BE NEW AND SHALL BEAR THE REGISTERED UL MARK. ALL WORK SHALL CONFORM WITH THE NATIONAL FIRE PROTECTION ASSOCIATION STANDARD 70, THE NATIONAL ELECTRICAL CODE (NEC), AND ALL APPLICABLE FEDERAL, STATE AND LOCAL CODES. CONTRACTOR SHALL SECURE ALL PERMITS AND PAY THE FEES REQUIRED TO CARRY OUT HIS WORK. THE CONTRACTOR SHALL FURNISH COPIES OF ALL CERTIFICATES AND PERMITS TO THE ENGINEER.
2. THE DRAWINGS AND SPECIFICATIONS INDICATE THE INTENT OF THE DESIGN AND SHALL BE CONSIDERED AS DIAGRAMMATIC ONLY. EXACT LOCATIONS FOR ALL OUTLETS AND EQUIPMENT SHALL BE DETERMINED AT THE SITE AS WORK PROGRESSES. ALL DIMENSIONS AND CONDITIONS SHALL BE CHECKED AND VERIFIED BY THE CONTRACTOR AT THE SITE. ALL FINAL WORK SHALL BE DOCUMENTED ON AS BUILT RECORD DRAWINGS.
3. ALL PIPING, CONDUITS AND EQUIPMENT OF ALL TRADES SHALL BE PROPERLY COORDINATED AND SET TO MAINTAIN THE CLEARANCES REQUIRED BY ALL APPLICABLE FEDERAL, STATE AND LOCAL CODES.
4. ALL CONDUITS SHALL BE TERMINATED SO AS TO PERMIT NEAT CONNECTIONS TO MOTORS AND OTHER EQUIPMENT.
5. NO CONDUIT SMALLER THAN 3/4" PIPE SIZE NOR WIRE SMALLER THAN #12 AWG SHALL BE USED UNLESS OTHERWISE NOTED.
6. CONDUIT AND/OR WIRE (NOT SHOWN) INTERCONNECTING THE LIGHTING FIXTURES AND/OR RECEPTACLES SHALL BE FURNISHED AND INSTALLED BY THE ELECTRICAL CONTRACTOR AND SHALL BE:
   a. 3/4" (MIN.) CONDUIT RUN
      1. EXPOSED IN UNFINISHED AREAS.
      2. CONCEALED ABOVE HUNG CEILINGS AND IN WALLS IN FINISHED AREAS.
   b. No. 12 CU. WIRE (MIN.) TYPE XHHW-2, NUMBER OF WIRES AS REQUIRED.
   c. SEE SPECIFICATION FOR USE OF TYPE MC CABLE.
7. ALL CONDUIT RUNS CROSSING EXPANSION JOINTS SHALL HAVE EXPANSION OR EXPANSION AND DEFLECTION TYPE FITTINGS AS REQUIRED. VERIFY EXISTING JOINTS BY FIELD MEASUREMENTS.
8. ALL CONDUITS SHALL HAVE PROPERLY SIZED EQUIPMENT GROUNDING CONDUCTORS.
9. ALL RACEWAYS AND WIRING SHALL BE RUN CONCEALED IN ALL FINISHED SPACES UNLESS OTHERWISE NOTED.
10. SPACES FOR LOAD CENTERS, PANELBOARDS AND SWITCHBOARDS SHALL INCLUDE AN EXCLUSIVELY DEDICATED SPACE EXTENDING FROM THE FLOOR TO THE STRUCTURAL CEILING WITH A WIDTH AND DEPTH THAT OF THE EQUIPMENT, INCLUDING ANY ADDITIONAL SPACE DESCRIBED IN SECTION 110.26 OF THE NEC. NO PIPING, DUCTS OR EQUIPMENT FOREIGN TO THE ELECTRICAL EQUIPMENT OR ARCHITECTURAL APPURTENANCES SHALL BE PERMITTED TO BE INSTALLED IN, ENTER OR PASS THROUGH SUCH SPACE.
11. ALL CONDUIT AND EQUIPMENT SHALL BE INSTALLED AND GROUNDED IN ACCORDANCE WITH THE LATEST RULES AND REGULATIONS OF THE NATIONAL ELECTRICAL CODE.
12. THE WIRING DIAGRAMS, QUANTITY AND SIZE OF WIRES AND CONDUIT REPRESENT A SUGGESTED ARRANGEMENT BASED UPON SELECTED STANDARD COMPONENTS OF ELECTRICAL EQUIPMENT. MODIFICATIONS ACCEPTABLE TO THE ENGINEER MAY BE MADE BY THE CONTRACTOR TO ACCOMMODATE EQUIPMENT ACTUALLY PURCHASED. THE BASIC SEQUENCE AND METHOD OF CONTROL MUST BE MAINTAINED AS INDICATED ON THE DRAWINGS AND/OR SPECIFICATIONS.
13. PANELBOARDS SHALL BE MOUNTED SO THAT THE DISTANCE FROM THE TOP CIRCUIT BREAKER OPERATING HANDLE TO THE FLOOR SHALL NOT EXCEED 6'-6".
14. ALL RECEPTACLES INSTALLED IN UNFINISHED AREAS SHALL BE GFI TYPE, MOUNTED 4'-0" ABOVE FINISHED FLOOR.
15. EXIT SIGNS AND EMERGENCY LIGHTING UNITS SHALL BE UNSWITCHED.
16. ALL CIRCUITS SHALL HAVE THEIR OWN NEUTRAL CONDUCTOR. COMMON NEUTRALS WILL NOT BE ALLOWED.
17. RECEPTACLES, SWITCHES, LIGHTING FIXTURES, SMOKE DETECTORS, ETC. INDICATE QUANTITY, EXACT LOCATIONS OF ALL DEVICES SHALL BE DETERMINED IN THE FIELD.

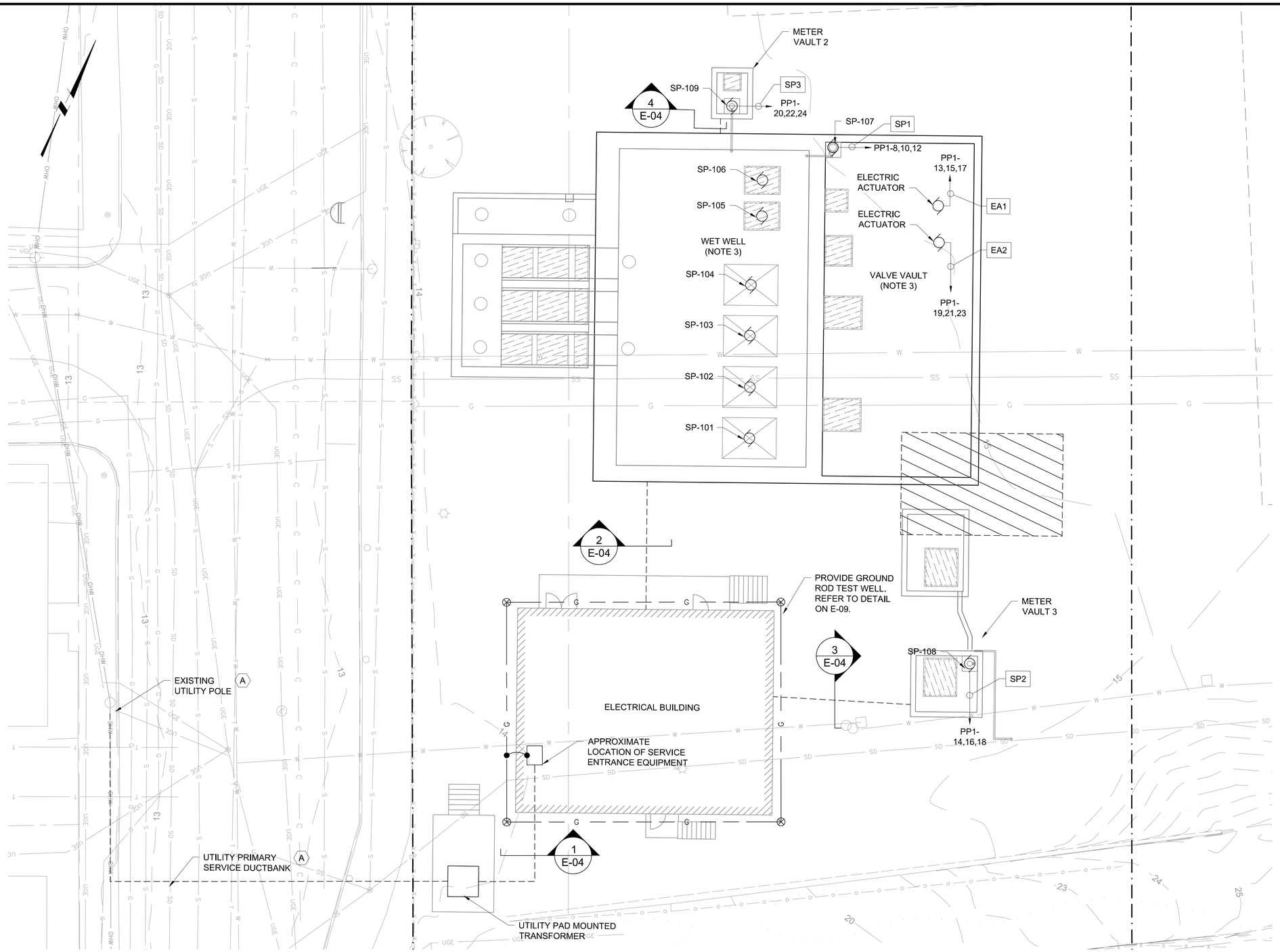

PLAN

GENERAL SHEET NOTES

1. REFER TO DRAWING EG-01 FOR LEGEND, ABBREVIATIONS & GENERAL NOTES.
2. REFER TO DRAWING E-04 FOR ONE-LINE DIAGRAM, CONDUIT & WIRE SCHEDULE, DUCTBANK SECTIONS, AND WIRING REQUIREMENTS.
3. REFER TO AREA CLASSIFICATION DETAILS ON E-07.
4. REFER TO GROUNDING DETAILS ON E-09.

SHEET KEYNOTES

A. PROVIDE UNDERGROUND DUCTBANK FROM EXISTING UTILITY POLE TO UTILTIY PAD MOUNTED TRANSFORMER. COORDINATE LOCATION, ROUTING, DUCTBANK SIZE, CONDUCTOR QUANTITY AND SIZE WITH NATIONAL GRID.

0 10 20
SCALE IN FEET

REV	DATE	BY	DESCRIPTION

SCALE: 1"=10'

WARNING: 0 ½ 1 — IF THIS BAR DOES NOT MEASURE 1" THEN DRAWING IS NOT TO SCALE

DATE: JULY 31, 2019
DRAWN BY: A BARRY
DESIGNED BY: A BARRY
CHECKED BY:
APPROVED BY:

60% DESIGN
NOT FOR CONSTRUCTION

This document is an interim document and not suitable for construction. As an interim document, it may contain data that is potentially inaccurate or incomplete and is not to be relied upon without the express written consent of the preparer.

Stantec

LYNN WATER & SEWER COMMISSION

LYNN WATER AND SEWER COMMISSION

PHASE 3 WEST LYNN SEWER SEPARATION

ELECTRICAL SITE PLAN

SHEET E-01

195130174

DWG FILE: C:\pwworkdir\d0537457\PHASE 3_BSS_E-01.dwg
PLOT DATE: Friday, July 26, 2019
BY: BARRY, ANDREW (BURLINGTON)

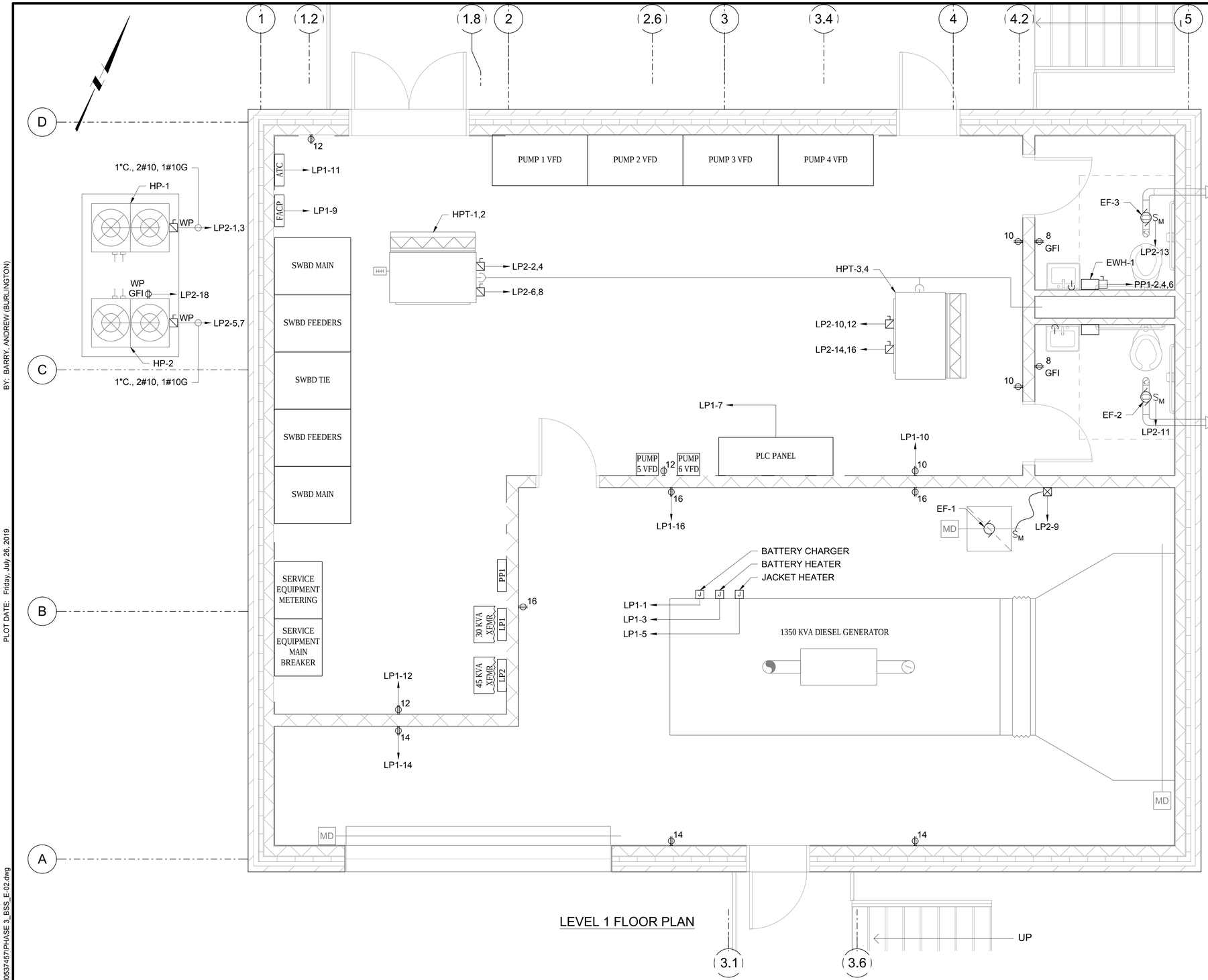

LEVEL 1 FLOOR PLAN

GENERAL SHEET NOTES

1. REFER TO DRAWING EG-01 FOR LEGEND, NOTES & ABBREVIATIONS.
2. REFER TO ONE-LINE DIAGRAM ON DRAWING E-04 FOR WIRING REQUIREMENTS.
3. ALL RECEPTACLES SHALL BE FED FROM PANEL LP1, UNLESS OTHERWISE NOTED.
4. PROVIDE (2) SECURITY CAMERAS ON THE EXTERIOR OF THE ELECTRICAL BUILDING. COORDINATE WITH INSTRUMENTATION FOR CONNECTION TO CITY.

0 2' 4' 6'
SCALE IN FEET

REV	DATE	BY	DESCRIPTION

SCALE: AS SHOWN

WARNING: 0 ½ 1 — IF THIS BAR DOES NOT MEASURE 1" THEN DRAWING IS NOT TO SCALE

DATE: JULY 31, 2019
DRAWN BY: A BARRY
DESIGNED BY: A BARRY
CHECKED BY:
APPROVED BY:

60% DESIGN
NOT FOR CONSTRUCTION

This document is an interim document and not suitable for construction. As an interim document, it may contain data that is potentially inaccurate or incomplete and is not to be relied upon without the express written consent of the preparer.

Stantec

LYNN WATER & SEWER COMMISSION

LYNN WATER AND SEWER COMMISSION
PHASE 3 WEST LYNN SEWER SEPARATION
ELECTRICAL POWER PLAN

SHEET E-02

195130174

DWG FILE: C:\pwworkdir\d0537457\PHASE 3_BSS_E-02.dwg
PLOT DATE: Friday, July 26, 2019
BY: BARRY, ANDREW (BURLINGTON)

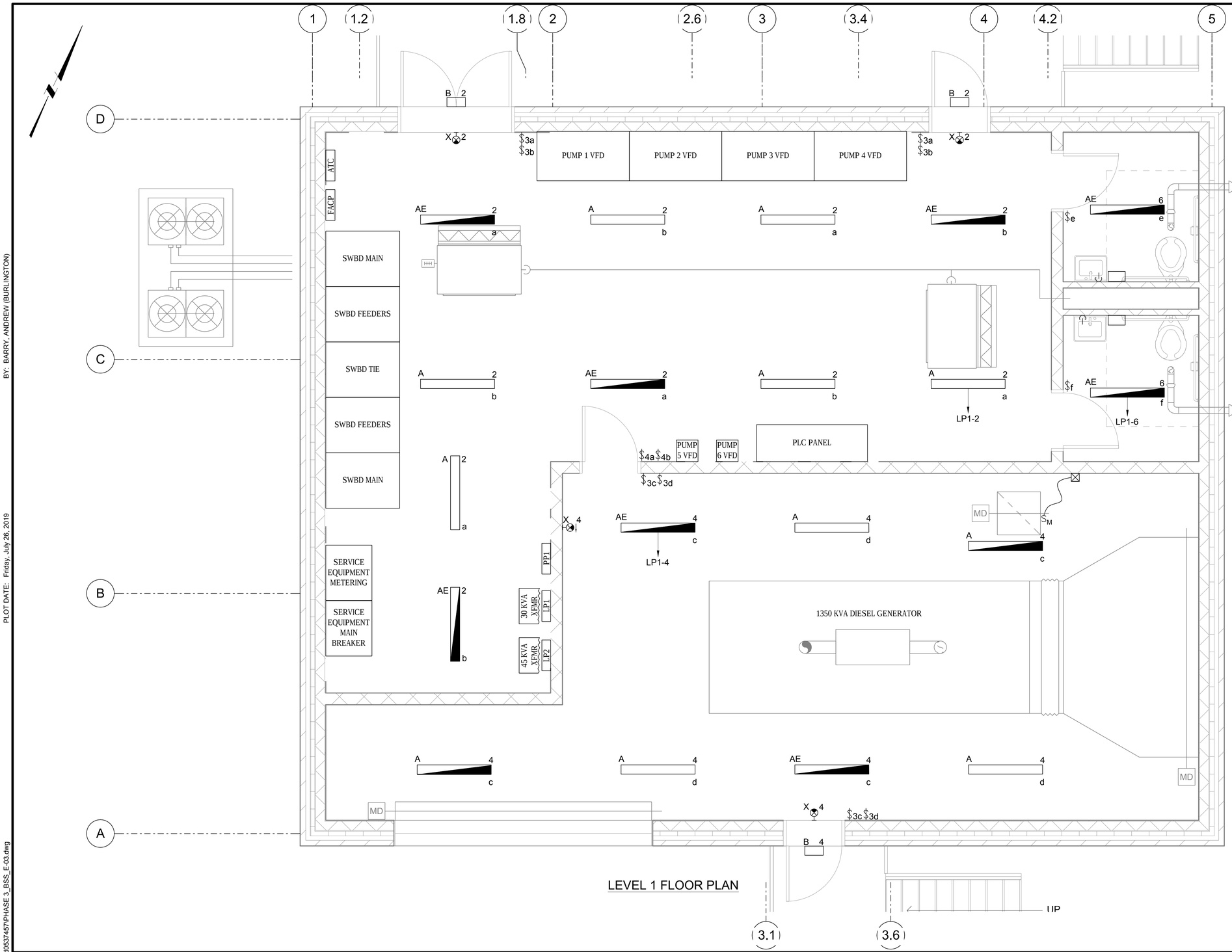

LEVEL 1 FLOOR PLAN

GENERAL SHEET NOTES

1. REFER TO DRAWING EG-01 FOR LEGEND, NOTES & ABBREVIATIONS.
2. ALL LIGHTING SHALL BE FED FROM PANEL LP1.

0 2' 4' 6'
SCALE IN FEET

BY: BARRY, ANDREW (BURLINGTON)
PLOT DATE: Friday, July 26, 2019
DWG FILE: C:\pwworkdir\d0537457\PHASE 3_BSS_E-03.dwg

REV	DATE	BY	DESCRIPTION

SCALE: AS SHOWN

WARNING: 0 ½ 1 — IF THIS BAR DOES NOT MEASURE 1" THEN DRAWING IS NOT TO SCALE

DATE: JULY 31, 2019
DRAWN BY: A BARRY
DESIGNED BY: A BARRY
CHECKED BY:
APPROVED BY:

60% DESIGN
NOT FOR CONSTRUCTION

This document is an interim document and not suitable for construction. As an interim document, it may contain data that is potentially inaccurate or incomplete and is not to be relied upon without the express written consent of the preparer.

Stantec

LYNN WATER & SEWER COMMISSION

LYNN WATER AND SEWER COMMISSION

PHASE 3 WEST LYNN SEWER SEPARATION

ELECTRICAL
LIGHTING PLAN

SHEET
E-03

195130174

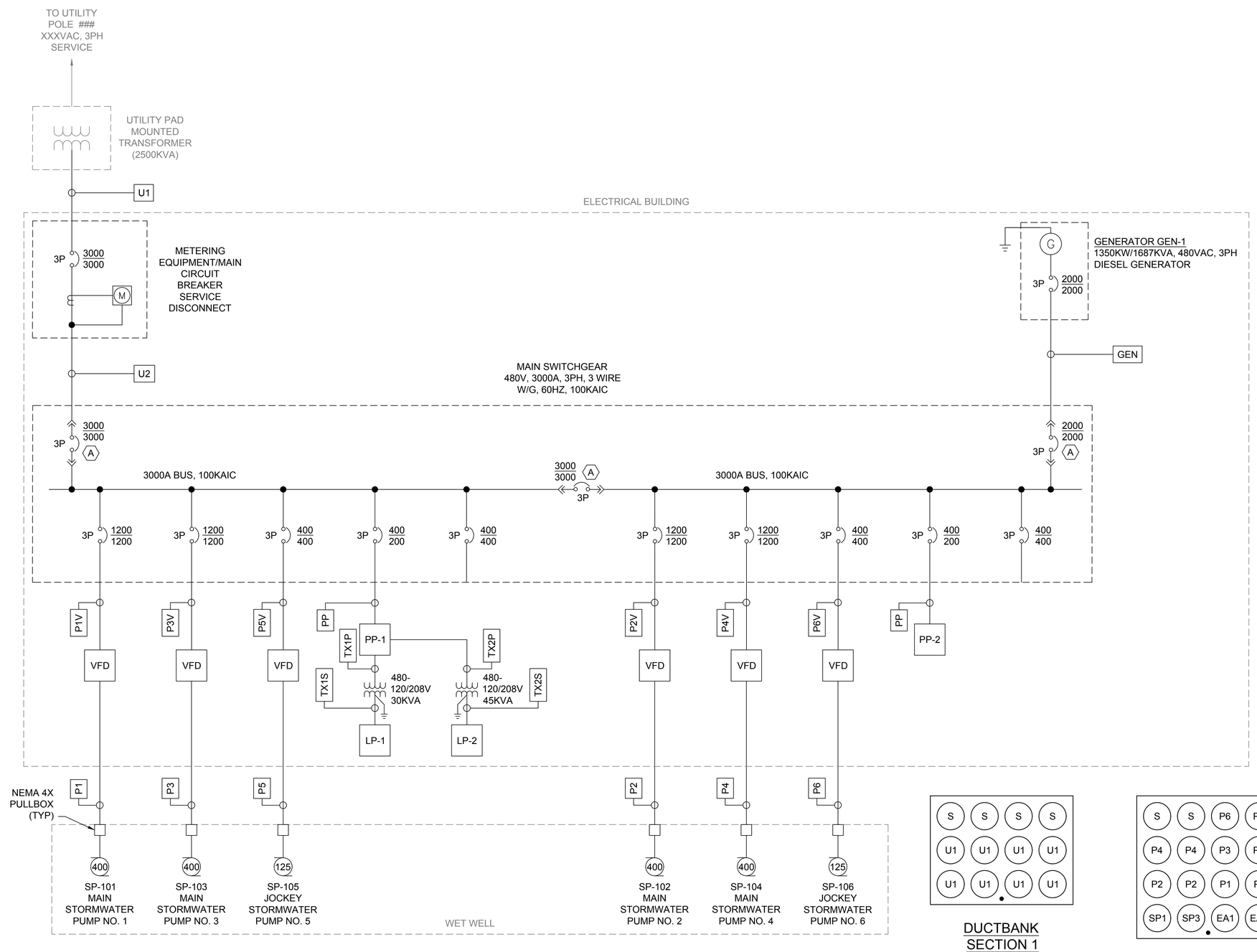

ONE-LINE DIAGRAM

DUCTBANK SECTION 1

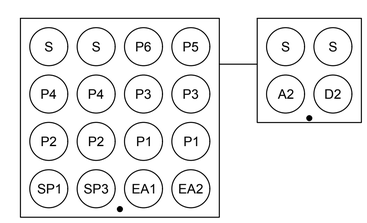

DUCTBANK SECTION 2

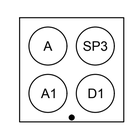

DUCTBANK SECTION 3

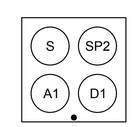

DUCTBANK SECTION 4

GENERAL SHEET NOTES

1. REFER TO DRAWING EG-01 FOR LEGEND, NOTES & ABBREVIATIONS.

SHEET KEYNOTES

A. PROVIDE ELECTRICALLY INTERLOCKED MAIN AND TIE BREAKERS WITH AUTOMATIC TRANSFER FUNCTION. OPERATION BUTTONS ON THE BREAKER FRONTS SHALL BE COVERED USING LOCKING PLATES TO PREVENT ANY LOCAL OPERATIONS WITHOUT ELECTRICAL INTERLOCKING.

B. PROVIDE ARC REDUCTION MAINTENANCE DEVICE INTEGRAL TO CIRCUIT BREAKER TRIP UNIT.

CONDUIT AND WIRE SCHEDULE

TAG	CONDUIT/WIRE
A1	1"C., 2/C#16T.S.
A2	2"C., 10(2/C#16T.S.)
D1	1"C., 6#14, 1#14G
D2	2"C., 62#14, 1#14G
EA1	2"C., 3#12, 1#12G
EA2	2"C., 3#12, 1#12G
GEN	6(3"C., 3#500, 1#250G)
P1V	3(3"C., 3#500, 1#3/0G)
P1	2(3"C., 3#350, 1#3/0G)
P2V	3(3"C., 3#500, 1#3/0G)
P2	2(3"C., 3#350, 1#3/0G)
P3V	3(3"C., 3#500, 1#3/0G)
P3	2(3"C., 3#350, 1#3/0G)
P4V	3(3"C., 3#500, 1#3/0G)
P4	2(3"C., 3#350, 1#3/0G)
P5V	2(3"C., 3#3/0, 1#3G)
P5	2"C., 3#3/0, 1#3G
P6V	2(3"C., 3#3/0, 1#3G)
P6	2"C., 3#3/0, 1#3G
PP	2"C., 3#3/0, 1#6G
SP1	2"C., 3#12, 1#12G
SP2	2"C., 3#12, 1#12G
SP3	2"C., 3#12, 1#12G
TX1P	1"C., 3#8, 1#10G
TX1S	1 1/2"C., 3#2, 1#2N, 1#8G
TX2P	1 1/2"C., 3#4, 1#8G
TX2S	2"C., 3#2/0, 1#2/0N, 1#6G
U1	8(3"C., 3#500, 1#3/0GSC)
U2	8(3"C., 3#500, 1#500G)

REV	DATE	BY	DESCRIPTION

SCALE: AS SHOWN

WARNING: 0 ½ 1 — IF THIS BAR DOES NOT MEASURE 1" THEN DRAWING IS NOT TO SCALE

DATE: JULY 31, 2019
DRAWN BY: A BARRY
DESIGNED BY: A BARRY
CHECKED BY:
APPROVED BY:

60% DESIGN
NOT FOR CONSTRUCTION

This document is an interim document and not suitable for construction. As an interim document, it may contain data that is potentially inaccurate or incomplete and is not to be relied upon without the express written consent of the preparer.

Stantec

LYNN WATER & SEWER COMMISSION

LYNN WATER AND SEWER COMMISSION

PHASE 3 WEST LYNN SEWER SEPARATION

ELECTRICAL
ONE-LINE DIAGRAM

SHEET E-04

195130174

BY: BARRY, ANDREW (BURLINGTON)
PLOT DATE: Friday, July 26, 2019
DWG FILE: C:\pwworkdir\d0537457\PHASE 3_BSS_E-04.dwg

GENERAL SHEET NOTES

1. REFER TO DRAWING EG-01 FOR LEGEND, NOTES & ABBREVIATIONS.

SHEET KEYNOTES

A. REFER TO ONE-LINE DIAGRAM ON DRAWING E-04 FOR WIRING REQUIREMENTS.

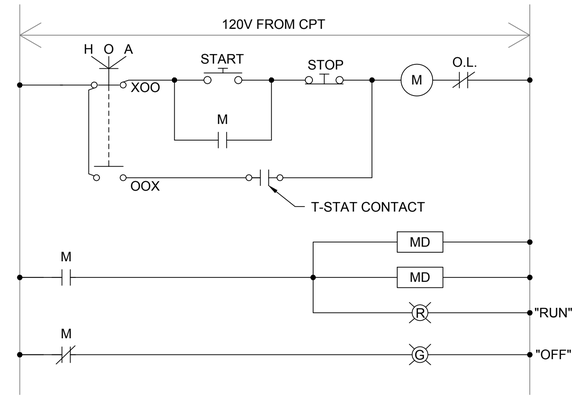

EXHAUST FAN CONTROL
WIRING DIAGRAM

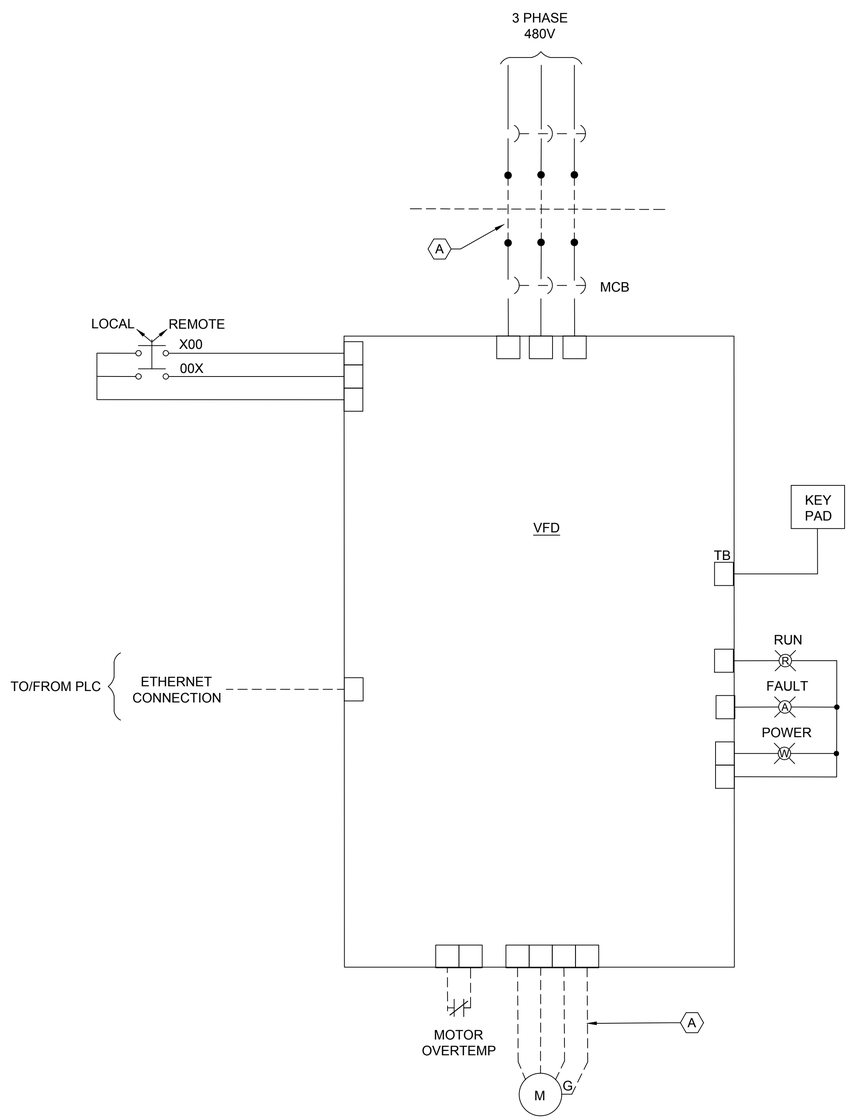

WIRING DIAGRAM -
PUMP VFD

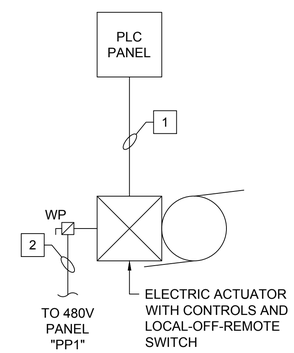

SCHEDULE OF CONDUIT & WIRING FOR MOTOR ACTUATED VALVES

TAG	CONDUIT & WIRE	NOTES
1	1"C, 18#14, 1#14G	FOR STATUS (VALVE OPEN, VALVE CLOSED, TORQUE ALARM, IN REMOTE, SPARE) FOR CONTROL (VALVE OPEN, VALVE CLOSE, SPARES)
2	1"C, 3#12, 1#12G	FOR POWER (VIA CONCRETE ENCASED DUCTBANK)

MOTOR ACTUATED VALVE
WIRING DETAIL

REV	DATE	BY	DESCRIPTION

SCALE: AS SHOWN

WARNING: 0 ½ 1 — IF THIS BAR DOES NOT MEASURE 1" THEN DRAWING IS NOT TO SCALE

DATE: JULY 31, 2019
DRAWN BY: A BARRY
DESIGNED BY: A BARRY
CHECKED BY:
APPROVED BY:

60% DESIGN
NOT FOR CONSTRUCTION

This document is an interim document and not suitable for construction. As an interim document, it may contain data that is potentially inaccurate or incomplete and is not to be relied upon without the express written consent of the preparer.

Stantec

LYNN WATER & SEWER COMMISSION

LYNN WATER AND SEWER COMMISSION

PHASE 3 WEST LYNN SEWER SEPARATION

ELECTRICAL
WIRING DIAGRAMS

SHEET
E-05

195130174

DWG FILE: C:\pwworkdir\d0537457\PHASE 3_BSS_E-05.dwg
PLOT DATE: Friday, July 26, 2019
BY: BARRY, ANDREW (BURLINGTON)

LUMINAIRE SCHEDULE

FIXTURE	DESCRIPTION	LISTING	CONTROLS/OPTIONS	LAMP	MINIMUM LIFE (HOURS)	CCT	MOUNTING	MAXIMUM WATTAGE	MINIMUM LUMENS	MANUFACTURER - CATALOG NUMBER	MANUFACTURER - CATALOG NUMBER
A	4' LINEAR STRIP LIGHT WITH REMOVABLE WIDE DIFFUSE LENS; HIGH GLOSS BAKED WHITE POLYESTER FINISH	DAMP LOCATION	-	LED	L70 - >100000	4000K	SUSPENDED MOUNTED	35	5000	LITHONIA LIGHTING CLX-L48-5000LM-HEF-RDL-MVOLT -GZ10-40K-80CRI	OR EQUAL
AE	4' LINEAR STRIP LIGHT WITH REMOVABLE WIDE DIFFUSE LENS; HIGH GLOSS BAKED WHITE POLYESTER FINISH	DAMP LOCATION	BATTERY BACK-UP	LED	L70 - >100000	4000K	SUSPENDED MOUNTED	35	5000	LITHONIA LIGHTING CLX-L48-5000LM-HEF-RDL-MVOLT -GZ10-40K-80CRI-PS1050	OR EQUAL
B	WALL SCONCE OUTDOOR LIGHT, ALUMINUM HOUSING; ONE-PIECE SILICONE GASKET; THERMOSET POWDER COAT FINISH	WET LOCATION	PHOTOCELL, BATTERY BACK-UP	LED	L87 - 100000	4000K	WALL MOUNT	15	1500	LITHONIA LIGHTING WST-P1-40K-VF-MVOLT-PE-E7WC	OR EQUAL
X	EMERGENCY EXIT LIGHTING, THERMOPLASTIC HOUSING; UNIVERSAL CHEVRON CUT-OUTS; BATTERY BACK-UP	DAMP LOCATION	-	LED	10 YEARS	N/A	WALL MOUNT	0.71W	N/A	LITHONIA LIGHTING QUANTUM - LQM-S EL N	OR EQUAL

PANEL: 'PP1'

LOCATION: ELECTRICAL ROOM | FEEDER BRANCH: NORMAL | DESCRIPTION: POWER PANEL
SERVICE - 277V/480V, 3PH, 3W + G | BUS CAPACITY: 200A | ENCLOSURE: NEMA-1
AIC RATING: 65000 A | MAIN O.C. RATING: 200A MCB | MOUNTING: SURFACE

CKT	LOAD DESCRIPTION	VA - A	VA-B	VA -C	CB	PH	CB	VA - A	VA-B	VA -C	LOAD DESCRIPTION	CKT
1		10000			50/3	A	20/3	833				2
3	LP1 XFMR (30KVA)		10000			B			833		EWH-1	4
5				10000		C				833		6
7		15000			70/3	A	20/3	600				8
9	LP2 XFMR (45KVA)		15000			B			600		SP-107 (1HP)	10
11				15000		C				600		12
13		1440			20/3	A	20/3	600				14
15	ELECTRIC ACTUATOR		1440			B			600		SP-108 (1HP)	16
17				1440		C				600		18
19		1440			20/3	A	20/3	600				20
21	ELECTRIC ACTUATOR		1440			B			600		SP-109 (1HP)	22
23				1440		C				600		24
25					20/3	A	20/3					26
27	SPARE					B					SPARE	28
29						C						30
31					20/3	A	20/3					32
33	SPARE					B					SPARE	34
35						C						36
	SUBTOTALS (VA)	27880	27880	27880				2633	2633	2633		

CONNECTED TOTALS	KVA	AMPS
PHASE-A	30.5	110.2
PHASE-B	30.5	110.2
PHASE-C	30.5	110.2

TOTAL CONNECTED: 91.54-KVA 110.2-A
TOTAL DEMAND: 94.78-KVA 114.1-A

DEMAND TYPE	CONNECTED LOAD (VA)
MISC.	75000
MOTOR	14040
HVAC	2499

PANEL: 'LP1'

LOCATION: ELECTRICAL ROOM | FEEDER BRANCH: NORMAL | DESCRIPTION: LIGHTING PANEL
SERVICE - 120V/208V, 3PH, 4W + G | BUS CAPACITY: 100A | ENCLOSURE: NEMA-1
AIC RATING: 10000 A | MAIN O.C. RATING: 100A MCB | MOUNTING: SURFACE

CKT	LOAD DESCRIPTION	VA - A	VA-B	VA -C	CB	PH	CB	VA - A	VA-B	VA -C	LOAD DESCRIPTION	CKT
1	BATTERY CHARGER	360			20/1	A	20/1	350			ELECTRICAL ROOM LIGHTING	2
3	BATTERY HEATER		360		20/1	B	20/1		250		GENERATOR ROOM LIGHTING	4
5	JACKET HEATER			360	20/1	C	20/1			70	RESTROOM LIGHTING	6
7	PLC PANEL	1000			20/1	A	20/1	360			RESTROOM RECEPTS	8
9	FIRE ALARM CONTROL PANEL		500		20/1	B	20/1		540		ELECTRICAL ROOM RECEPTS	10
11	ATC PANEL			500	20/1	C	20/1			540	ELECTRICAL ROOM RECEPTS	12
13	FM-101				20/1	A	20/1	540			GENERATOR ROOM RECEPTS	14
15	FM-102				20/1	B	20/1		540		GENERATOR ROOM RECEPTS	16
17	SPARE				20/1	C	20/1				SPARE	18
19	SPARE				20/1	A	20/1				SPARE	20
21	SPARE				20/1	B	20/1				SPARE	22
23	SPARE				20/1	C	20/1				SPARE	24
25	SPARE				20/1	A	20/1				SPARE	26
27	SPARE				20/1	B	20/1				SPARE	28
29	SPARE				20/1	C	20/1				SPARE	30
31	SPARE				20/1	A	20/1				SPARE	32
33	SPARE				20/1	B	20/1				SPARE	34
35	SPARE				20/1	C	20/1				SPARE	36
	SUBTOTALS (VA)	1360	860	860				1250	1330	610		

CONNECTED TOTALS	KVA	AMPS
PHASE-A	2.6	21.8
PHASE-B	2.2	18.3
PHASE-C	1.5	12.3

TOTAL CONNECTED: 6.27-KVA 17.4-A
TOTAL DEMAND: 6.44-KVA 17.9-A

DEMAND TYPE	CONNECTED LOAD (VA)
MISC.	2580
RECEPTACLE	2520
LIGHTING	670
HVAC	500

PANEL: 'LP2'

LOCATION: ELECTRICAL ROOM | FEEDER BRANCH: NORMAL | DESCRIPTION: MECHANICAL PANEL
SERVICE - 120V/208V, 3PH, 4W + G | BUS CAPACITY: 200A | ENCLOSURE: NEMA-1
AIC RATING: 22000 A | MAIN O.C. RATING: 150A MCB | MOUNTING: SURFACE

CKT	LOAD DESCRIPTION	VA - A	VA-B	VA -C	CB	PH	CB	VA - A	VA-B	VA -C	LOAD DESCRIPTION	CKT
1	HP-1	2200			30/2	A	20/2	1500			HPT-1	2
3			2200			B			1500			4
5	HP-2			2200	30/2	C	20/2			1500	HPT-2	6
7		2200				A		1500				8
9	EF-1		1656		20/1	B	20/2		1500		HPT-3	10
11	EF-2			20	20/1	C				1500		12
13	EF-3	20			20/1	A	20/2	1500			HPT-4	14
15	SPARE				20/1	B			1500			16
17	SPARE				20/1	C	20/1			180	HP RECEPTACLE	18
19	SPARE				20/1	A	20/1				SPARE	20
21	SPARE				20/1	B	20/1				SPARE	22
23	SPARE				20/1	C	20/1				SPARE	24
25	SPARE				20/1	A	20/1				SPARE	26
27	SPARE				20/1	B	20/1				SPARE	28
29	SPARE				20/1	C	20/1				SPARE	30
31	SPARE				20/1	A	20/1				SPARE	32
33	SPARE				20/1	B	20/1				SPARE	34
35	SPARE				20/1	C	20/1				SPARE	36
	SUBTOTALS (VA)	4420	3856	2220				4500	4500	3180		

CONNECTED TOTALS	KVA	AMPS
PHASE-A	8.9	74.3
PHASE-B	8.4	69.6
PHASE-C	5.4	45.0

TOTAL CONNECTED: 22.68-KVA 63.0-A
TOTAL DEMAND: 22.68-KVA 63.0-A

DEMAND TYPE	CONNECTED LOAD (VA)
HVAC	22496
RECEPTACLE	180

BY: BARRY, ANDREW (BURLINGTON)
PLOT DATE: Friday, July 26, 2019
DWG FILE: C:\pwworkdir\d0537457\PHASE 3_BSS_E-06.dwg

REV	DATE	BY	DESCRIPTION

SCALE: AS SHOWN

WARNING: 0 ½ 1 — IF THIS BAR DOES NOT MEASURE 1" THEN DRAWING IS NOT TO SCALE

DATE: JULY 31, 2019
DRAWN BY: A BARRY
DESIGNED BY: A BARRY
CHECKED BY:
APPROVED BY:

60% DESIGN
NOT FOR CONSTRUCTION

This document is an interim document and not suitable for construction. As an interim document, it may contain data that is potentially inaccurate or incomplete and is not to be relied upon without the express written consent of the preparer.

Stantec

LYNN WATER & SEWER COMMISSION

LYNN WATER AND SEWER COMMISSION
PHASE 3 WEST LYNN SEWER SEPARATION
ELECTRICAL SCHEDULES

SHEET E-06

195130174

GENERAL SHEET NOTES

1. REFER TO DRAWING EG-01 FOR LEGEND, NOTES & ABBREVIATIONS.

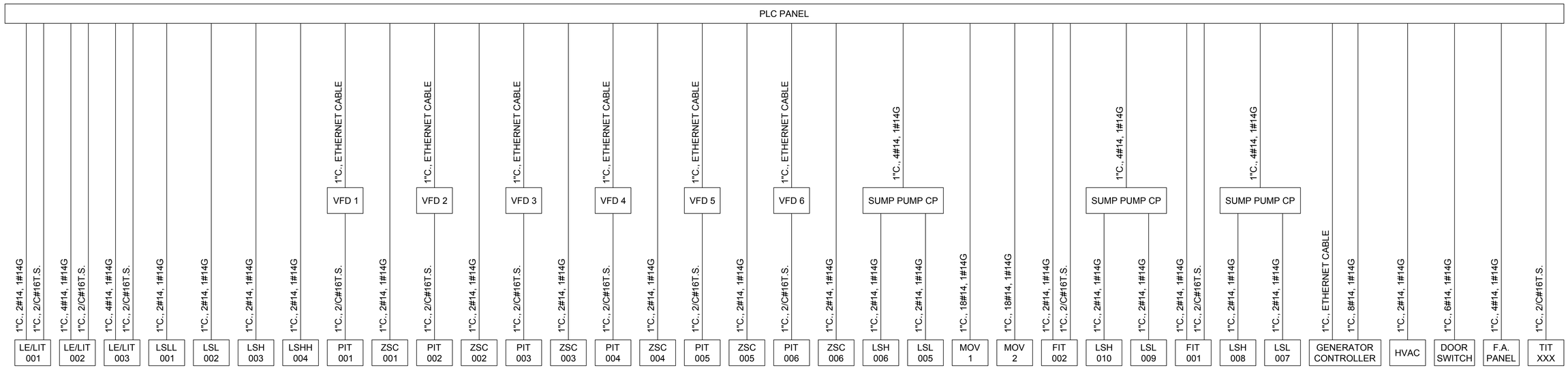

INSTRUMENTATION RISER DIAGRAM

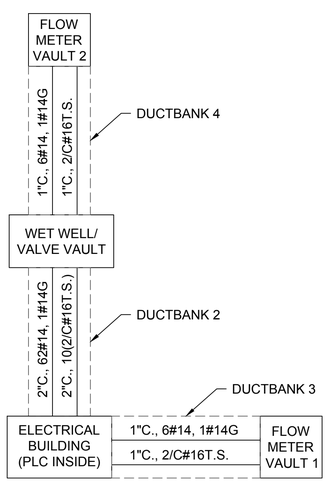

INSTRUMENTATION DUCTBANK WIRING DIAGRAM

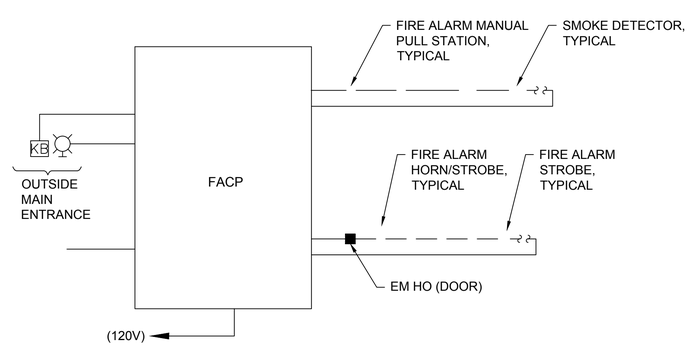

FIRE ALARM RISER DIAGRAM

FIRE ALARM RISER NOTES:

1. FOR LEGEND, GENERAL NOTES AND ABBREVIATIONS, SEE DRAWING EG-01.
2. REFER TO THE FLOOR PLANS FOR EXACT LOCATIONS AND QUANTITIES OF ALL DEVICES. FURNISH AND INSTALL ALL WIRING IN ACCORDANCE WITH THE MANUFACTURER'S WIRING DIAGRAMS AND SHOP DRAWINGS. RUN ALL WIRING IN 3/4" MINIMUM SIZE CONDUIT UNLESS OTHERWISE NOTED.
3. ALL WIRING AND EQUIPMENT SHALL BE INSTALLED IN ACCORDANCE WITH THE NATIONAL ELECTRIC CODE AND NFPA 72. DEVICE LOCATIONS SHOWN ON THE PLANS SHALL BE COORDINATED WITH OTHER TRADES. ROUTE ALL WIRING TO THE DEVICES AND EQUIPMENT SHOWN ON THE PLANS AND TO FURNISH AND INSTALL ALL NECESSARY WIRING, RACEWAY, PULL BOXES AND ACCESSORIES/MODULES TO MAKE COMPLETE AND OPERATIONAL SYSTEMS.
4. ALL CONDUIT AND WIRE ROUTING SHOWN IS DIAGRAMMATIC. COORDINATE ALL ELECTRIC WORK, CONDUIT AND WIRE ROUTING WITH HVAC EQUIPMENT, DUCTWORK, PLUMBING AND STRUCTURAL ELEMENTS.
5. COORDINATE ALL FIRE ALARM SYSTEM REQUIREMENTS, REPORTING AND DEVICE LOCATIONS WITH THE LOCAL FIRE DEPARTMENT PRIOR TO PROCUREMENT AND INSTALLATION OF EQUIPMENT.

REV	DATE	BY	DESCRIPTION

SCALE: AS SHOWN

WARNING: 0 ½ 1 — IF THIS BAR DOES NOT MEASURE 1" THEN DRAWING IS NOT TO SCALE

DATE: JULY 31, 2019
DRAWN BY: A BARRY
DESIGNED BY: A BARRY
CHECKED BY:
APPROVED BY:

60% DESIGN
NOT FOR CONSTRUCTION

This document is an interim document and not suitable for construction. As an interim document, it may contain data that is potentially inaccurate or incomplete and is not to be relied upon without the express written consent of the preparer.

Stantec

LYNN WATER & SEWER COMMISSION

LYNN WATER AND SEWER COMMISSION
PHASE 3 WEST LYNN SEWER SEPARATION
ELECTRICAL
INSTRUMENTATION RISER DIAGRAM

SHEET E-07

195130174

DWG FILE: C:\pwworkdir\d0537457\PHASE 3_BSS_E-07.dwg
PLOT DATE: Friday, July 26, 2019
BY: BARRY, ANDREW (BURLINGTON)

GENERAL SHEET NOTES

1. REFER TO DRAWING EG-01 FOR LEGEND, NOTES & ABBREVIATIONS.

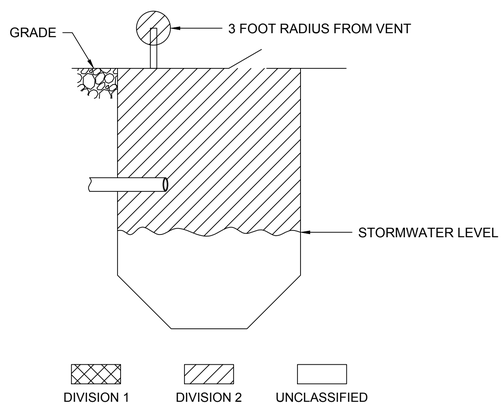

STORMWATER WET WELL AREA CLASSIFICATION DETAIL

NOT TO SCALE

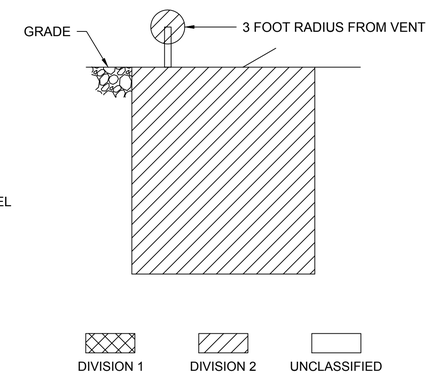

STORMWATER VALVE VAULT AREA CLASSIFICATION DETAIL

NOT TO SCALE

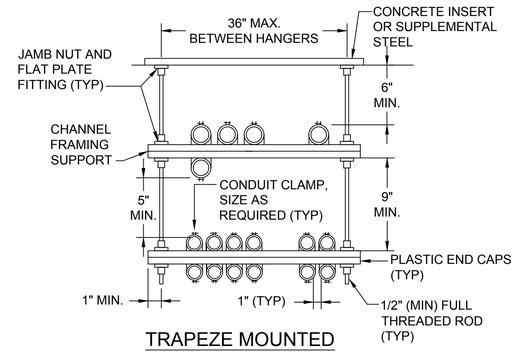

TRAPEZE MOUNTED

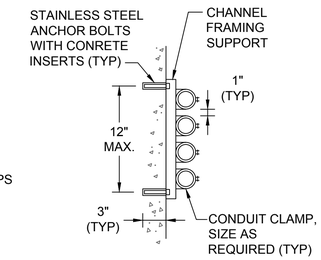

WALL MOUNTED

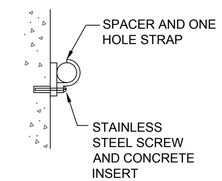

CEILING OR WALL MOUNTED

CONDUIT MOUNTING DETAILS

NOT TO SCALE

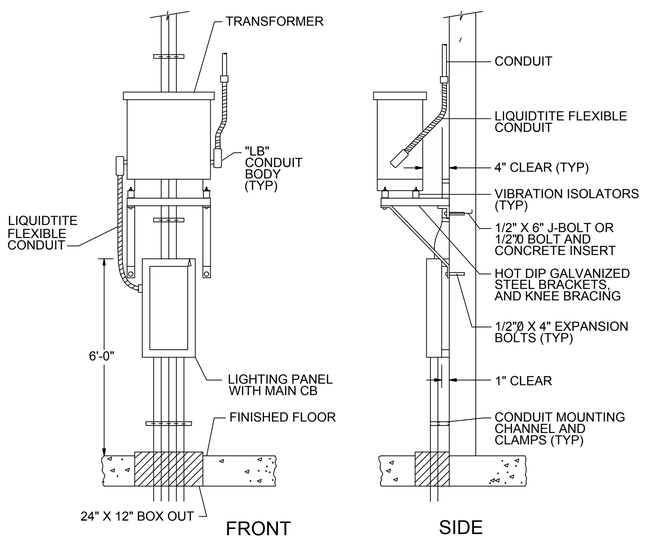

WALL-MOUNTED TRANSFORMER AND PANELBOARD DETAIL

NOT TO SCALE

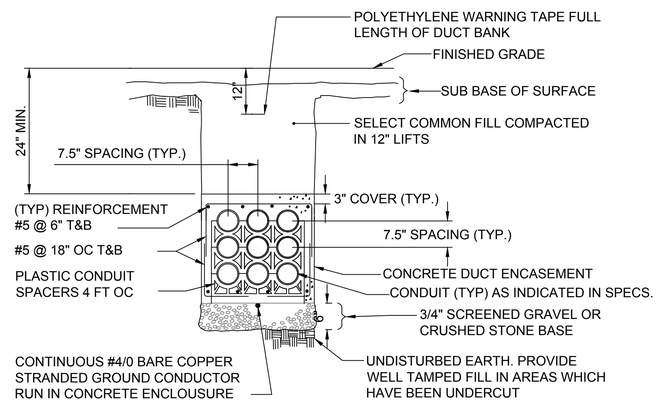

CONCRETE ENCASED DUCTBANK

NOT TO SCALE

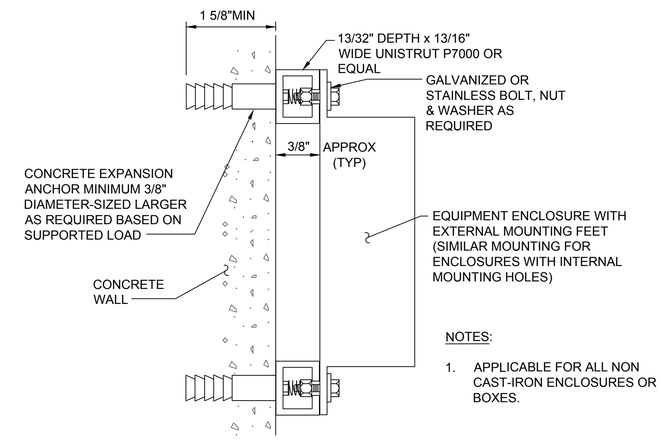

NOTES:

1. APPLICABLE FOR ALL NON CAST-IRON ENCLOSURES OR BOXES.

EQUIPMENT ENCLOSURE MOUNTING ON CONCRETE WALL DETAIL

NOT TO SCALE

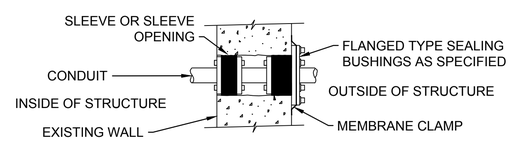

CONDUIT PENETRATION DETAIL

NOT TO SCALE

REV	DATE	BY	DESCRIPTION

SCALE: AS SHOWN

WARNING: 0 ½ 1 — IF THIS BAR DOES NOT MEASURE 1" THEN DRAWING IS NOT TO SCALE

DATE	JULY 31, 2019
DRAWN BY	A BARRY
DESIGNED BY	A BARRY
CHECKED BY	
APPROVED BY	

60% DESIGN
NOT FOR CONSTRUCTION

This document is an interim document and not suitable for construction. As an interim document, it may contain data that is potentially inaccurate or incomplete and is not to be relied upon without the express written consent of the preparer.

Stantec

LYNN WATER & SEWER COMMISSION

LYNN WATER AND SEWER COMMISSION

PHASE 3 WEST LYNN SEWER SEPARATION

ELECTRICAL DETAILS - I

SHEET E-08

195130174

BY: BARRY, ANDREW (BURLINGTON)

PLOT DATE: Friday, July 26, 2019

DWG FILE: C:\pwworkdir\d0537457\PHASE 3_BSS_E-08-09.dwg

GENERAL SHEET NOTES

1. REFER TO DRAWING EG-01 FOR LEGEND, NOTES & ABBREVIATIONS.

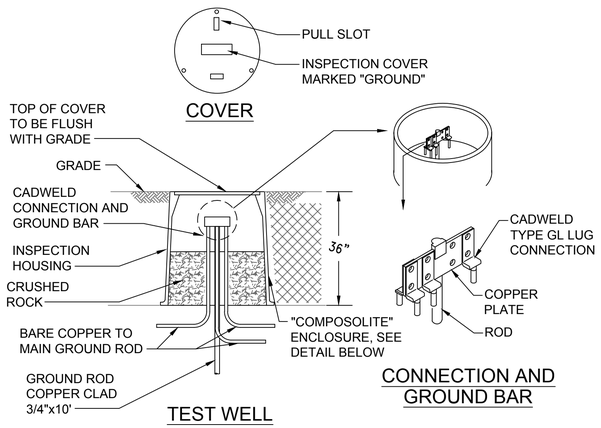

NEW GROUND ROD INSPECTION AND TEST WELL DETAIL

NOT TO SCALE

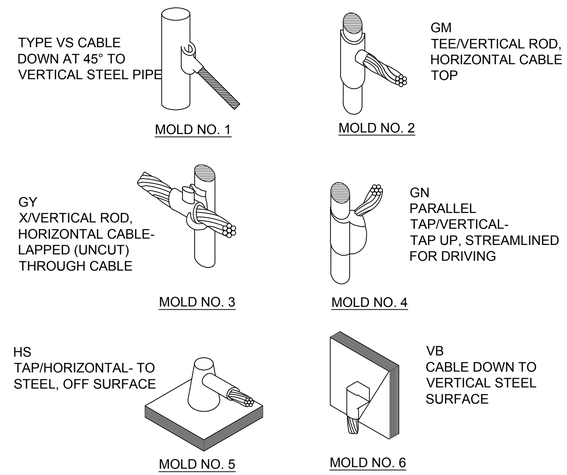

CAD WELD GROUNDING CONNECTION DETAILS

NOT TO SCALE

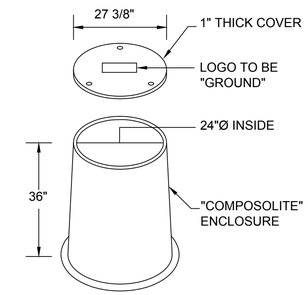

TEST WELL ENCLOSURE DETAIL

NOT TO SCALE

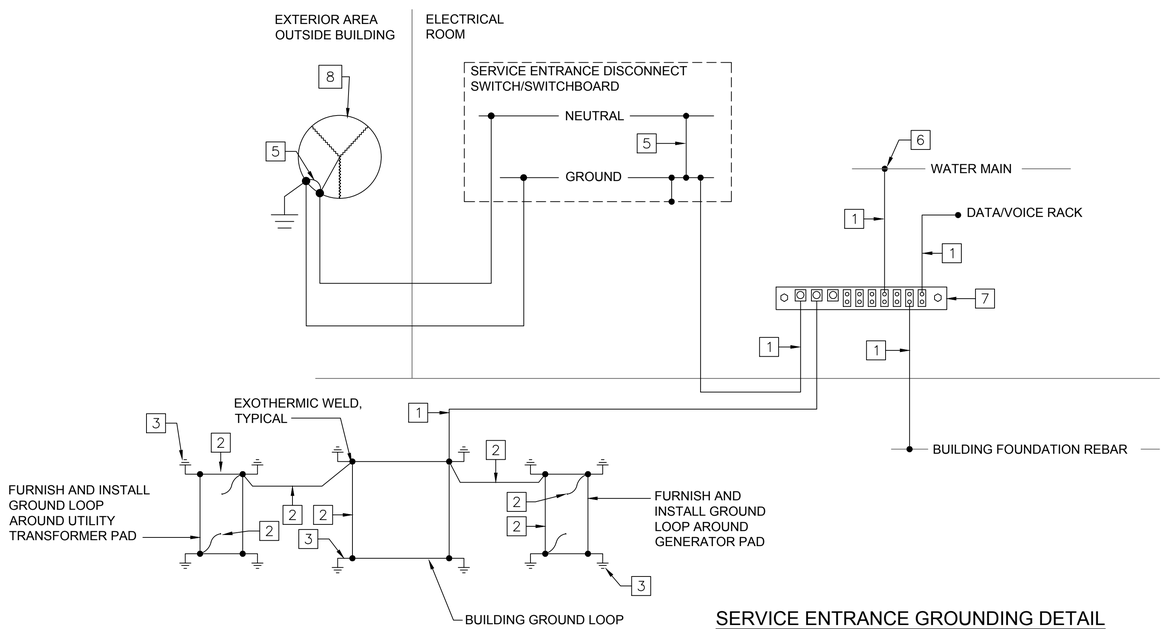

SERVICE ENTRANCE GROUNDING DETAIL

NOT TO SCALE

GROUNDING KEY NOTES:

1. FURNISH AND INSTALL #4/0 GROUNDING ELECTRODE CONDUCTOR IN 1"C.
2. FURNISH AND INSTALL #4/0 GROUNDING ELECTRODE CONDUCTOR.
3. FURNISH AND INSTALL UL LISTED 10'-0" x 3/4" COPPER CLAD GROUND ROD. DRIVE 12" BELOW GRADE (TYPICAL).
4. NOT USED.
5. FURNISH AND INSTALL MAIN BONDING JUMPER WITHIN ENCLOSURE.
6. FURNISH AND INSTALL #4/0 BONDING JUMPERS AND GROUNDING CLAMPS FOR MAIN METALLIC WATER SERVICE PIPES AS REQUIRED.
7. FURNISH AND INSTALL WALL MOUNTED COPPER BUS BAR. PROVIDE 4" WIDE X 12" LONG X 1/4" THICK BUS BAR WITH STANDOFF WALL ISOLATION MOUNTS. MOUNT BUS BAR 12" AFF. SEE BUS BAR MOUNTING DETAIL ON THIS DRAWING.
8. STANDBY GENERATOR SHALL BE SOLIDLY GROUNDED AS SEPARATELY DERIVED SYSTEM. BOND GENERATOR NEUTRAL TO GROUND AND TO GROUND RING.

REV	DATE	BY	DESCRIPTION

SCALE: AS SHOWN

WARNING: 0 ½ 1 — IF THIS BAR DOES NOT MEASURE 1" THEN DRAWING IS NOT TO SCALE

DATE: JULY 31, 2019
DRAWN BY: A BARRY
DESIGNED BY: A BARRY
CHECKED BY:
APPROVED BY:

60% DESIGN
NOT FOR CONSTRUCTION

This document is an interim document and not suitable for construction. As an interim document, it may contain data that is potentially inaccurate or incomplete and is not to be relied upon without the express written consent of the preparer.

Stantec

LYNN WATER & SEWER COMMISSION

LYNN WATER AND SEWER COMMISSION

PHASE 3 WEST LYNN SEWER SEPARATION

ELECTRICAL DETAILS - II

SHEET E-09

195130174

BY: BARRY, ANDREW (BURLINGTON)

PLOT DATE: Friday, July 26, 2019

DWG FILE: C:\pwworkdir\d0537457\PHASE 3_BSS_E-08-09.dwg

INSTRUMENT SYMBOLS

	CONTROL ROOM PANEL	FIELD MOUNTED	LOCAL PANEL
DISCRETE INSTRUMENTS	SD		
SHARED DISPLAY SHARED CONTROL eg. DCS = DISTRIBUTED CONTROL SYSTEM			
COMPUTER FUNCTION eg. FLOW METER			
PROGRAMMABLE LOGIC CONTROL (PLC) (RTU)	XXX	XXX	XXX 3 1 4 5 2 6

*SUBSCRIPT ABBREVIATION SPECIFIES INSTRUMENT FUNCTION OR LOCATION.
eg. IP#1 (INSTRUMENT PANEL #1), SD (SHUTDOWN)

FIELD MOUNTED INSTRUMENTS MAY BE POST OR WALL MOUNTED

- STATUS LIGHT SHOW COLOUR INSIDE SYMBOL
- I — SYSTEM LOGIC
- R — MANUAL RESET
- E — EMERGENCY SHUTDOWN LOGIC
- P — PURGE OR FLUSHING DEVICE
- ORIFICE PLATE C/W ORIFICE FLANGES
- FLOW INDICATOR ROTAMETER TYPE
- TURBINE OR PROPELLER TYPE PRIMARY ELEMENT
- ANNUBAR OR PITOT TUBE
- MAGNETIC FLOW METER
- VORTEX FLOW METER
- U — ULTRASONIC FLOW METER
- VCP — LOCAL CONTROL PANEL INDLUDED IN VENDOR PACKAGE
- ACP — AREA CONTROL PANEL
- DIGITAL INPUT
- DIGITAL OUTPUT
- ANALOG INPUT
- ANALOG OUTPUT
- PULSE INPUT
- MODULATING DIGITAL OUTPUT

SYMBOL LEGEND

- RISER UP
- RISER DOWN
- BRANCH-TOP CONNECTION
- BRANCH-BOTTOM CONNECTION
- UNION
- CAP
- REDUCER (R)
- STRAINER
- HOSE CONNECTION
- VALVE IN RISER
- PIPE SLOPE (INCHES PER FOOT)
- DIRECTION OF FLOW
- RPBFP — REDUCED PRESSURE BACKFLOW PREVENTER (RPBP)
- BUTTERFLY VALVE (BFV)
- BALL VALVE (BV)
- BALL CHECK VALVE (BCV)
- SWING CHECK VALVE (CV)
- GATE VALVE (GV)
- GLOBE VALVE
- DIAPHRAGM VALVE
- NEEDLE VALVE
- EXPANSION JOINT
- PRESSURE REDUCING VALVE(PRV)
- BACK PRESSURE VALVE (BPV)
- PRESSURE SAFETY VALVE (PSV)
- PRESSURE GAUGE W/DIAPHRAGM
- PS — PRESSURE SWITCH W/SNUBBER
- PULSATION DAMPER
- AIR RELEASE VALVE (ARV)
- AIR VACUUM VALVE (ARVV)
- COMBINATION AIR VALVE (CAVV)
- CENTRIFUGAL PUMP
- COMPRESSOR
- METERING PUMP (MP)
- AIR COMPRESSOR
- ORIFICE PLATE
- VENTURI FLOW METER
- MAGNETIC INSERTION FLOW METER
- M — ELECTROMAGNETIC FLOW METER
- TURBINE METER
- ROTOMETER
- SH — CHEMICAL INJECTION / SAMPLE POINT
- CALIBRATION COLUMN
- STATIC MIXER
- M — MOTOR OPERATED
- S — SOLENOID OPERATED
- ULTRASONIC LEVEL
- (#) — INDICATES QUANTITIES
- INDICATES REMOVALS
- HYDRANT

INSTRUMENT LINE SYMBOLS

- ELECTRICAL SIGNAL
- CONTROL SYSTEM DATA LINK DEVICENET OR ETHERNET AS NOTED
- DATA LINK OR SYSTEM BUS AND SOFT INTERAL LINK
- ELECTROMAGNETIC OR SONIC SIGNAL (GUIDED AND NON GUIDED)
- FO — FO — FIBER OPTIC

IDENTIFICATION LETTERS

	FIRST-LETTER		SUCCEEDING-LETTERS		
	MEASURED OR INITIATING VARIABLE	MODIFIER	READOUT OR PASSIVE FUNCTION	OUTPUT FUNCTION	MODIFIER
A	ANALYSIS		ALARM		
B	BURNER, COMBUSTION				
C	CIRCUIT			CONTROL	CLOSED
D	DISCONNECT	DIFFERENTIAL			
E	VOLTAGE / EMERGENCY		SENSOR (PRIMARY ELEMENT)		
F	FLOW RATE	RATIO (FRACTION)			
G	GENERAL / COMMENT		GLASS, VIEWING DEVICE		
H	HAND OPERATED				HIGH
I	CURRENT (ELECTRICAL)		INDICATE		
J	POWER	SCAN			
K	TIME, TIME SCHEDULE	TIME RATE OF CHANGE		CONTROL STATION	
L	LEVEL		LIGHT		LOW
M	MOTOR	MOMENTARY			MIDDLE, INTERMEDIATE
N	USER'S CHOICE		RUN		
O	ON / OFF		ORIFICE, RESTRICTION		OPEN
P	PRESSURE, VACUUM		POINT (TEST) CONNECTION		
Q	QUANTITY, STATE	INTEGRATE, TOTALIZE			
R	RADIATION		RECORD		
S	SPEED, FREQUENCY	SAFETY	STATUS	SWITCH	
T	TEMPERATURE			TRANSMIT	
U	MULTIVARIABLE		MULTIFUNCTION	MULTIFUNCTION	MULTIFUNCTION
V	VIBRATION, MECHANICAL ANALYSIS			VALVE, DAMPER, LOUVER	
W	WEIGHT, FORCE		WELL		
X	UNCLASSIFIED	X AXIS			
Y	EVENT OR PRESENCE	Y AXIS		RELAY, COMPUTE, CONVERT	
Z	POSITION, DIMENSION	Z AXIS		DRIVER, ACTUATOR, UNCLASSIFIED FINAL CONTROL ELEMENT	

RELAY FUNCTION DESIGNATORS

Σ	ADD	>	HIGH SELECT
Δ	SUBTRACT	<	LOW SELECT
±	BIAS	A/D	ANALOG TO DIGITAL
%	GAIN OR ATTENUATE	REV	REVERSE
√	EXTRACT SQ ROOT	E/P	POTENTIAL TO PNEUMATIC
÷	DIVIDE	I/P	CURRENT TO PNEUMATIC
X	MULTIPLY	E/I	POTENTIAL TO CURRENT
1:1	BOOST		

HAND SWITCH DESIGNATION

ES - EMERGENCY STOP
HOA - HAND-OFF-AUTO
HOR - HAND-OFF-REMOTE
J - JOG
LOR - LOCAL-OFF-REMOTE
LR - LOCAL-REMOTE
OC - OPEN-CLOSE
OO - ON-OFF

INSTRUMENT SUBSCRIPT ABBREVIATIONS

ABBR.	DESCRIPTION	ABBR.	DESCRIPTION
ACK	ACKNOWLEDGE	I/P	CURRENT TO PNEUMATIC
ACP	AREA CONTROL PANEL	LCP	LOCAL CONTROL PANEL
A/S	AIR SUPPLY	LEL	LOWER EXPLOSIVE LIMIT
BRG	BEARING	LOR	LOCAL/OFF/REMOTE
CT	CURRENT TRANSFORMER	M/A	MANUAL/AUTO
CL2	CHLORINE	OBD	OUTBOARD
DIFF	DIFFERENTIAL	O/C	OPEN/CLOSE
DISCH	DISCHARGE	O/L	OVERLOAD
D/P	DIFFERENTIAL PRESSURE	O/O	ON/OFF
ESO	EMERGENCY SHUTDOWN	PAR	PROCESS ALARM RELAY
ETM	ELAPSED TIME METER	PLC	PROGRAMMABLE LOGIC CONTROL
FC	FAIL CLOSED	RESET	RESET
FO	FAIL OPEN	RIO	REMOTE INPUT/OUTPUT
H	HIGH	SP	SET POINT
HH	HIGH HIGH	SW	SELECTOR SWITCH
HMI	HUMAN MACHINE INTERFACE	S/S	STOP/START
HOA	HAND/OFF/AUTO	TURB	TURBIDITY
HORN	ANNUNCIATOR HORN	UPS	UNINTERRUPTABLE POWER SUPPLY
HOR	HAND/OFF/REMOTE	VCP	VENDOR CONTROL PANEL
IBD	INBOARD	VIB	VIBRATION
I/I	CURRENT/CURRENT ISOLATION	WDG	WINDING

ELECTRICAL EQUIPMENT IDENTIFICATION TAG

MCC-001
- SEQUENTIAL LOOP IDENTIFIER UNIQUE NUMBER ASSIGNMENT BASED ON FUNCTION
- FUNCTIONAL IDENTIFICATION CODE

INSTRUMENT TAG NUMBERS & INDENTIFICATION

FCV xx / xxxx
- FUNCTIONAL IDENTIFICATION CODE (SEE ABOVE)
- ADDITIONAL IDENTIFICATION (SEE ABBREVIATION LIST)
- SEQUENTIAL LOOP IDENTIFIER UNIQUE NUMBER ASSIGNMENT

REV	DATE	BY	DESCRIPTION

SCALE: NONE

WARNING: 0 ½ 1 — IF THIS BAR DOES NOT MEASURE 1" THEN DRAWING IS NOT TO SCALE

DATE: JULY 31, 2019
DRAWN BY: T COSMA
DESIGNED BY: P RELF
CHECKED BY:
APPROVED BY:

60% DESIGN
NOT FOR CONSTRUCTION

This document is an interim document and not suitable for construction. As an interim document, it may contain data that is potentially inaccurate or incomplete and is not to be relied upon without the express written consent of the preparer.

Stantec

LYNN WATER & SEWER COMMISSION

LYNN WATER AND SEWER COMMISSION

PHASE 3 WEST LYNN SEWER SEPARATION

INSTRUMENTATION AND CONTROLS GENERAL LEGEND AND NOTES

SHEET IG-01

195130174

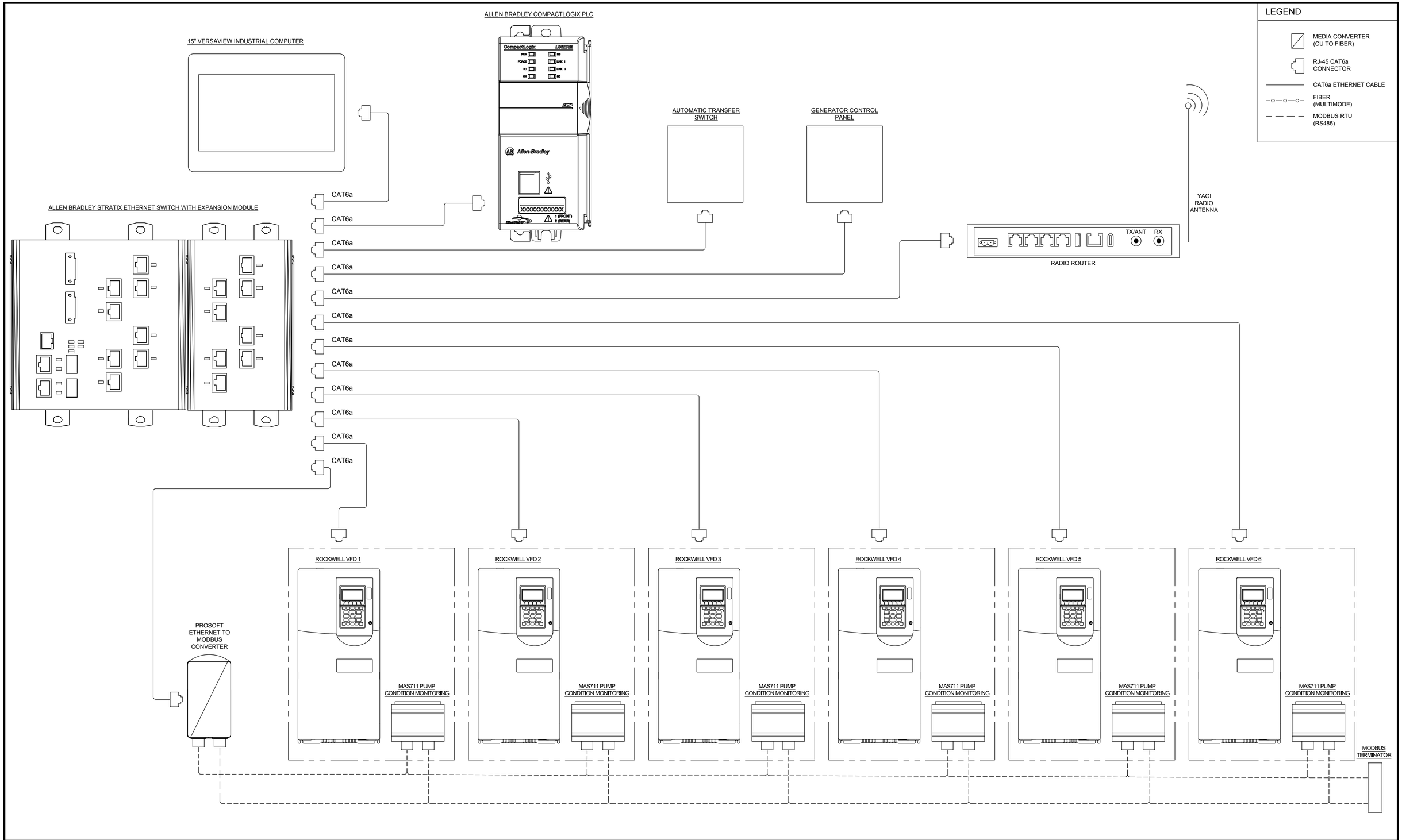

REV	DATE	BY	DESCRIPTION

SCALE: NONE

WARNING: 0 ½ 1 — IF THIS BAR DOES NOT MEASURE 1" THEN DRAWING IS NOT TO SCALE

DATE: JULY 31, 2019
DRAWN BY: T COSMA
DESIGNED BY: P RELF
CHECKED BY:
APPROVED BY:

60% DESIGN
NOT FOR CONSTRUCTION

This document is an interim document and not suitable for construction. As an interim document, it may contain data that is potentially inaccurate or incomplete and is not to be relied upon without the express written consent of the preparer.

Stantec

LYNN WATER & SEWER COMMISSION

LYNN WATER AND SEWER COMMISSION

PHASE 3 WEST LYNN SEWER SEPARATION

INSTRUMENTATION AND CONTROLS GENERAL
PLC CONTROL PANEL COMMUNICATIONS

SHEET
IG-02

195130174

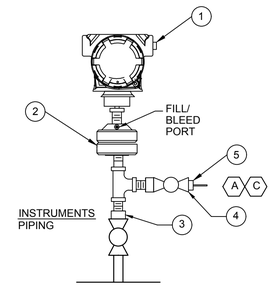

PRESSURE TRANSMITTER
WITH DIAPHRAGM SEAL

GENERAL NOTES:

1. POTENTIALLY WETTED MATERIALS SHALL BE CHEMICALLY INERT TO THE PROCESS.
2. REFER TO P&IDS AND DATA SHEETS FOR PROCESS PIPING SIZE AND MATERIAL.
3. PIPING SIDE ISOLATION VALVES FURNISHED AND INSTALLED BY MECHANICAL CONTRACTOR.

KEYNOTES:

A. FURNISH 1/4" (8mm) OD MALE CONNECTOR AND 1/4" OD (1.5mm WALL THICKNESS) 316SS DOWN-TURNED DRAIN TUBING FOR FIELD INSTALLATION. ENSURE VENT / DRAIN IS DIRECTED TO SAFE LOCATION.

B. FOR AMBIENT TEMPERATURE APPLICATONS LOWER THAN -10 degC, ETHYLENE GLYCOL FILL FLUID REQUIRED IN LIEU OF STANDARD SILICONE OIL.

C. VENT / DRAIN TO SAFE LOCATION (GRADE / DRAIN)

BILL OF MATERIALS

ITEM	QTY	DESCRIPTION	SUPPLY	MATERIAL/ RATING (WATER)	MATERIAL/ RATING (CHEMICAL)
1	1	PRESSURE TRANSMITTER ELECTRONIC HOUSING	MANF	EPOXIY COATED ALUMINIUM	
2	AR	ISOLATION DIAPHRAGM SEAL; SILICONE OIL FILL FLUID (B)	MANF	316 SS	HASTELLOY C OR PVC
3	1	HEX REDUCING BUSHING 1"x1/2" (25mm x15mm)	CONT	316 SS	316 SS OR PVC
4	1	1/2" DRAIN BALL VALVE	CONT	316 SS	316 SS OR PVC
4	1	HEX REDUCING BUSHING 1/2"x1/4" (15mm x6mm)	CONT	316 SS	316 SS OR PVC

PRESSURE TRANSMITTER
NOT TO SCALE
I-901

REV	DATE	BY	DESCRIPTION

SCALE: NONE

WARNING: 0 ½ 1 — IF THIS BAR DOES NOT MEASURE 1" THEN DRAWING IS NOT TO SCALE

DATE: JULY 31, 2019
DRAWN BY: T COSMA
DESIGNED BY: P RELF
CHECKED BY:
APPROVED BY:

60% DESIGN
NOT FOR CONSTRUCTION

This document is an interim document and not suitable for construction. As an interim document, it may contain data that is potentially inaccurate or incomplete and is not to be relied upon without the express written consent of the preparer.

Stantec

LYNN WATER & SEWER COMMISSION

LYNN WATER AND SEWER COMMISSION

PHASE 3 WEST LYNN SEWER SEPARATION

INSTRUMENTATION AND CONTROLS GENERAL
INSTRUMENTAL STANDARD DETAILS - I

SHEET
IG-03

195130174

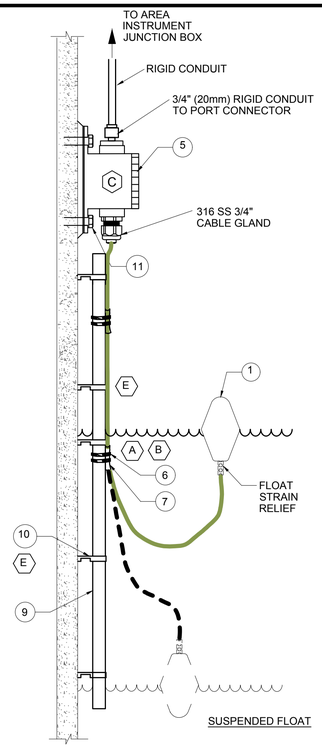

SUSPENDED FLOAT

GENERAL NOTES:

1. PROVIDE MECHANICAL SUPPORT AND FITTINGS FOR ROUTED CONDUIT.
2. SWITCHES SHALL BE MOUNTED AND ORIENTED IN ACCORDANCE WITH THE MANUFACTURER REQUIREMENTS.
3. INSTALLATION OF ANY FLANGED UNITS SHALL BE CARRIED OUT IN COOPERATION WITH THE PIPING AND/ OR TANK SUPPLIER CONTRACTOR.
4. WETTED MATERIALS SHALL BE CHEMICALLY INERT TO THE PROCESS.
5. USE PVC COATED SS TIE-WRAPS TO NEATLY COIL AND SECURE ANY EXCESS FLOAT CABLING AS SHOWN.
6. JUNCTION BOX SHALL BE MOUNTED ABOVE THE NORMAL WATER OPERATING LEVELS

KEYNOTES:

A. POSITION THE ADJUSTABLE STRAIN RELIEF ON THE CABLE TO ALLOW ONE HALF THE DISTANCE OF THE DIFFERENTIAL BAND BETWEEN THE END OF THE ADJUSTABLE STRAIN RELIEF AND THE END OF THE STRAIN RELIEF ON THE FLOAT.

B. FOR SUSPENDED FLOAT, PROVIDE CABLE TIE AT MIDPOINT AND TOP OF ADJUSTABLE STRAIN RELIEF AS SHOWN, PLUS ONE CABLE TIE FOR EVERY 12" (300mm) OF CABLE LENGTH.

C. TERMINAL JUNCTION BOX SHALL BE WALL OR FLOOR MOUNTED IN EASILY ACCESSED LOCATION WITHIN 30 FEET (10 METERS) OF INSTRUMENT INSTALLATION. FOR FLOOR MOUNT PROVIDE 1/2" (15mm) THICK GROUTING. FOR WALL MOUNT, LOCATE APPROXIMATELY 36" (1 METER) ABOVE GRADE. IF AREA INSTRUMENT JUNCTION BOX IS WITHIN 33 FEET (10 METERS) OF INSTRUMENT INSTALLATION, TERMINAL BOX WILL NOT BE REQUIRED AND INSTRUMENT CABLE MUST BE ROUTED WITHOUT SPLICE OF ANY KIND.

D. MAINTENANCE LOOP SHALL INCLUDE 3 FEET (1 METER) LENGTH OF CABLE SECURED WITH PVC-COATED SS TIE WRAPS, BEND RADIUS NO LESS THAN 8" (200mm).

E. PROVIDE MOUNTING BRACKET SUPPORT FOR EVERY 3FT (1M) OF PIPE LENGTH.

BILL OF MATERIALS

ITEM	QTY	DESCRIPTION	SUPPLY	MATERIAL/RATING (WATER)	MATERIAL/RATING (CHEMICAL)
1	1	SUSPENDED BALL FLOAT SWITCH WITH INTEGRAL CABLE	MANF	PVC	PVC
2	1	FLOAT SWITCH HOUSING	MANF	EPOXY COATED ALUMINUM	EPOXY COATED ALUMINUM
5	AR	LOCKABLE SCREW LID TERMINAL JUNCTION BOX WITH DIN-RAIL MOUNTED TERMINAL BLOCK (MIN DIMENSIONS: 2" (53mm) (h) X 4" (110mm) (Ø))	MANF	NEMA 4X / GRP	NEMA 4X / GRP
6	AR	CABLE TIES	CONT	PVC COATED 316 SS	PVC COATED 316 SS
7	1	ADJUSTABLE STRAIN RELIEF	MANF	NEOPRENE	NEOPRENE
9	1	FLOAT SUPPORT PIPE	CONT	PVC (SCH 80)	PVC (SCH 80)
10	AR	MOUNTING BRACKET WITH 5/8" (16mm) SS ANCHOR BOLTS (E)	CONT	316 SS	316 SS
11	AR	SS BOLTS / ANCHORS	CONT	316 SS	316 SS

FLOAT LEVEL DETECTION SWITCH

NOT TO SCALE

I-902

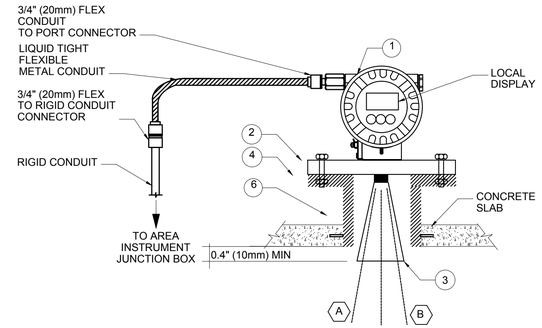

TOP MOUNT WITH LOCAL DISPLAY

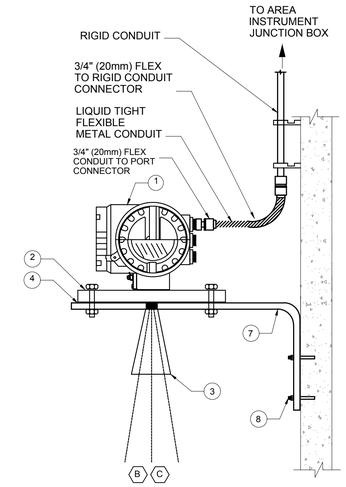

BRACKET INSTALLED - WALL MOUNT

GENERAL NOTES:

1. PROVIDE MECHANICAL SUPPORT AND FITTINGS FOR ROUTED CONDUIT.
2. IN APPLICATIONS WITH HEAVY CONDENSATION ANTICIPATED OR TURBULENT LIQUID SURFACE, EMPLOY MANUFACTURER RECOMMENDED LOW FREQUENCY MODEL. SELECTED WAVELENGTH SHOULD BE LARGER THAN ANTICIPATED RIPPLE SIZE.
3. VENDOR FURNISHED CABLING SHALL BE RATED WATERTIGHT AND FOR CONTINUOUS UV EXPOSURE WITHOUT DEGRADATION.
4. ELECTRONIC SUPPRESSION OF INTERFERENCE ECHOES USING MANF. TRANSMITTER TOOLS MAY BE REQUIRED.
5. USE PVC COATED SS TIE-WRAPS TO NEATLY COIL AND SECURE ANY EXCESS SENSOR CABLING AS SHOWN.

KEYNOTES:

A. THE SENSOR HORN BOTTOM RIM SHALL BE INSTALLED NO LESS THAN 12" (300mm) ABOVE THE MAXIMUM TANK LEVEL AND PROPERLY ALIGNED PER THE MANUFACTURER'S REQUIREMENTS.

B. SENSOR SHALL BE INSTALLED SUCH THAT THE BEAM ANGLE DOES NOT ENCOUNTER ANY PHYSICAL DEVICE OR FLOW STREAM IN THE BEAM'S SENSING PATH.

C. MANUFACTURE FURNISHED ANGLE BRACKET (WITH MOUNTING HARDWARE) SHALL BE SIZED AND TAPPED TO SUPPORT WALL-MOUNT INSTALLATION. REFER TO INSTRUMENT SCHEDULE OR DATA SHEET FOR MEASURING DEPTH REQUIREMENT.

BILL OF MATERIALS

ITEM	QTY	DESCRIPTION	SUPPLY	MATERIAL/RATING (WATER)	MATERIAL/RATING (CHEMICAL)	
1	1	TRANSMITTER ELECTRONIC HOUSING	MANF	EPOXY COATED ALUMINIUM	EPOXY COATED ALUMINIUM	
2	1	6" (DN150) DIA FLANGE (TAPPED TO ACCOMMODATE INSTRUMENT FITTING) AND MOUNTING HARDWARE	MANF	316 SS	316 SS	
3	1	3" (DN80) OR 4" (DN100) ANTENNA HORN (LENGTH TO ACHIEVE MAX BEAM ANGLE INDICATED)	MANF	316 SS	ALLOY-400 OR PTFE	
4	AR	GASKET	CONT	VITON	VITON	
5	1	REMOTE DISPLAY	MANF	EPOXY COATED ALUMINIUM	EPOXY COATED ALUMINIUM	
6	1	6" (150mm) DIA SCH 80 FLANGED PIPE SLEEVE WITH SEEP RING	CONT	304 SS	316 SS OR PVC	
7	1	WALL-MOUNT ANGLE BRACKET TAPPED FOR INSTRUMENT FITTING (SIZED TO MAINTAIN MINIMUM DISTANCE BETWEEN BEAM AND WALL) (C)	MANF	316 SS	316 SS	
8	AR	ANCHOR BOLTS AND MOUNTING HARDWARE	MANF	316 SS	316 SS	
9	1	IN-CONDUIT REMOTE DISPLAY CABLE LIMIT ROUTING TO 66 FEET (20M)	MANF	PER VENDOR	PER VENDOR	

RADAR LEVEL TRANSMITTER

NOT TO SCALE

I-903

REV	DATE	BY	DESCRIPTION

SCALE: NONE

WARNING: 0 ½ 1 — IF THIS BAR DOES NOT MEASURE 1" THEN DRAWING IS NOT TO SCALE

DATE: JULY 31, 2019
DRAWN BY: T COSMA
DESIGNED BY: P RELF
CHECKED BY:
APPROVED BY:

60% DESIGN
NOT FOR CONSTRUCTION

This document is an interim document and not suitable for construction. As an interim document, it may contain data that is potentially inaccurate or incomplete and is not to be relied upon without the express written consent of the preparer.

Stantec

LYNN WATER & SEWER COMMISSION

LYNN WATER AND SEWER COMMISSION

PHASE 3 WEST LYNN SEWER SEPARATION

INSTRUMENTATION AND CONTROLS GENERAL
INSTRUMENTAL STANDARD DETAILS - II

SHEET
IG-04

195130174

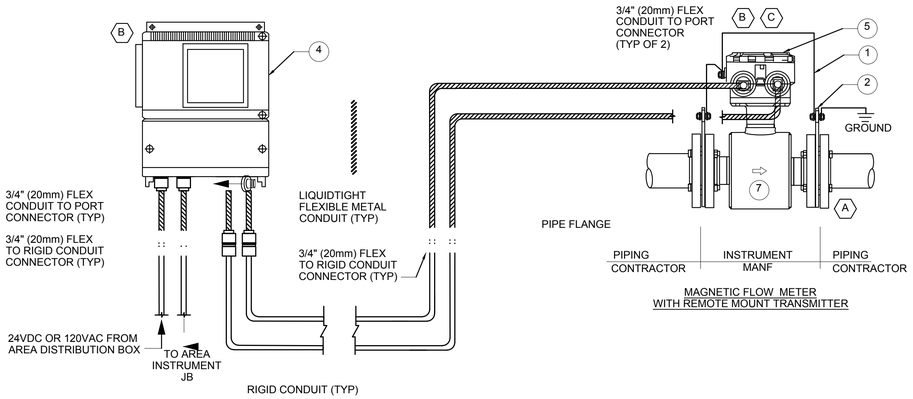

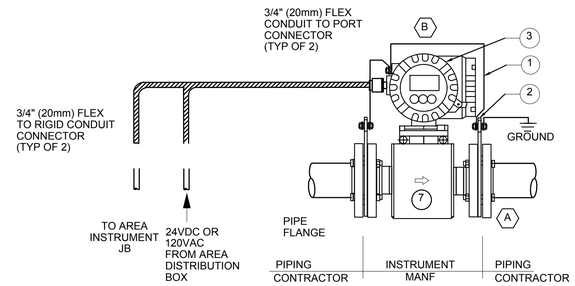

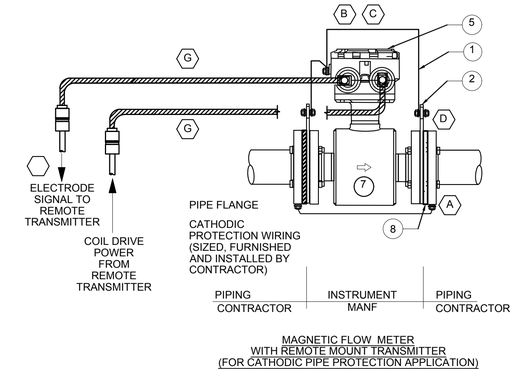

GENERAL NOTES:

1. REFER TO P&IDS AND DATA SHEETS FOR PROCESS PIPING SIZE AND MATERIAL.
2. BIDIRECTIONAL APPLICATION REQUIRES 5 PIPE DIAMETERS ON BOTH SIDES OF METER, MINIMUM. UNIDIRECTIONAL APPLICATION REQUIRES 5 PIPE DIAMETERS UPSTREAM AND 2 PIPE DIAMETERS DOWNSTREAM WITH STABLE PROCESS CONDUCTIVITY.
3. WETTED MATERIALS SHALL BE CHEMICALLY INERT TO THE PROCESS.
4. INSTALLATION OF MATING FLANGES WITH THE FLOW METER SHALL BE CARRIED OUT IN COOPERATION WITH THE PIPING CONTRACTOR USING UPSTREAM AND DOWNSTREAM PIPE REDUCERS AS NECESSARY.
5. PROVIDE MECHANICAL SUPPORT FOR ROUTED CONDUIT.
6. REFER TO DIVISION 26 SPECIFICATIONS FOR FLEX AND RIGID CONDUIT MATERIAL AND USAGE LIMITATIONS.

KEYNOTES:

A. GROUNDING RINGS REQUIRED FOR METALLIC AND NON-METALLIC PIPE INSTALLATIONS TO SUPPORT PROPER SOLUTION GROUNDING AND / OR LINING PROTECTION.
B. CONFIGURE FOR EMPTY PIPE DETECTION.
C. WHERE TEMPORARY SUBMERGENCE IS POSSIBLE, ELECTRONIC HOUSING SHALL BE POTTED AND SEALED BY MANUFACTURER PRIOR TO SHIPPING TO SITE.
D. CONTRACTOR TO ISOLATE METER FROM THE PIPELINE USING ISOLATION WASHERS AND SLEEVES ON FLANGE BOLTS.
E. 316 SS OR HASTELLOY C PREFERRED. HOWEVER ENGINEER APPROVED FINAL SELECTION BASED ON MATERIAL CHEMICAL COMPATIBILITY.
F. SELECTED GROUNDING RING MATERIAL TO MATCH MEASURING ELECTRODE MATERIAL.
G. FOR INSTALLATION WITHIN CATHODIC PROTECTION SYSTEMS, USE NON-METALLIC LIQUIDTIGHT FLEXIBLE CONDUIT.
H. DISCONNECT COIL SIGNAL SHIELD WIRE AT THE REMOTE TRANSMITTER.

BILL OF MATERIALS

ITEM	QTY	DESCRIPTION	SUPPLY	MATERIAL/RATING (WATER)	MATERIAL/RATING (CHEMICAL)
1	1	AWG # 8 GROUNDING CONDUCTOR TO GROUND GRID	CONT	COPPER	COPPER
2	2	GROUNDING RING	MANF	316 SS (F)	316 SS OR HASTELLOY C (F)
3	1	INTEGRAL TRANSMITTER WITH DISPLAY AND DUAL CONDUIT PORTS	MANF	POWDER COATED ALUMINUM	POWDER COATED ALUMINUM
4	1	REMOTE TRANSMITTER WITH DISPLAY	MANF	POWDER COATED ALUMINUM	POWDER COATED ALUMINUM
5	1	METER REMOTE WIRE HOUSING FOR REMOTE TRANSMITTER WITH DUAL CONDUIT PORTS	MANF	POWDER COATED ALUMINUM	POWDER COATED ALUMINUM
6	1 EACH	COIL DRIVE AND ELECTRODE SIGNAL CABLES (SEPARATE CABLES; LENGTH AS REQUIRED)	CONT	PER MANF SPEC	PER MANF SPEC
7	-	METER MEASURING TUBE / FLANGES (LINER PER MANF RECOMMENDATION)	MANF	304 SS	(E)
8	2	INSULATING GASKET	CONT	EPDM / NEOPRENE	EPDM / NEOPRENE

MAGNETIC FLOW METER (I-905)
NOT TO SCALE

REV	DATE	BY	DESCRIPTION

SCALE: NONE

WARNING: 0 ½ 1 — IF THIS BAR DOES NOT MEASURE 1" THEN DRAWING IS NOT TO SCALE

DATE: JULY 31, 2019
DRAWN BY: T COSMA
DESIGNED BY: P RELF
CHECKED BY:
APPROVED BY:

60% DESIGN
NOT FOR CONSTRUCTION

This document is an interim document and not suitable for construction. As an interim document, it may contain data that is potentially inaccurate or incomplete and is not to be relied upon without the express written consent of the preparer.

Stantec

LYNN WATER & SEWER COMMISSION

LYNN WATER AND SEWER COMMISSION
PHASE 3 WEST LYNN SEWER SEPARATION
INSTRUMENTATION AND CONTROLS GENERAL
INSTRUMENTAL STANDARD DETAILS - III

SHEET IG-05

195130174

GENERAL SHEET NOTES

1. THIS LAYOUT IS TYPICAL - PANEL SHALL BE SIZED TO ACCOMMODATE ALL I/O PLUS 20% SPARE CAPACITY.
2. SEE SHEET IG-07 FOR MATERIAL LIST.

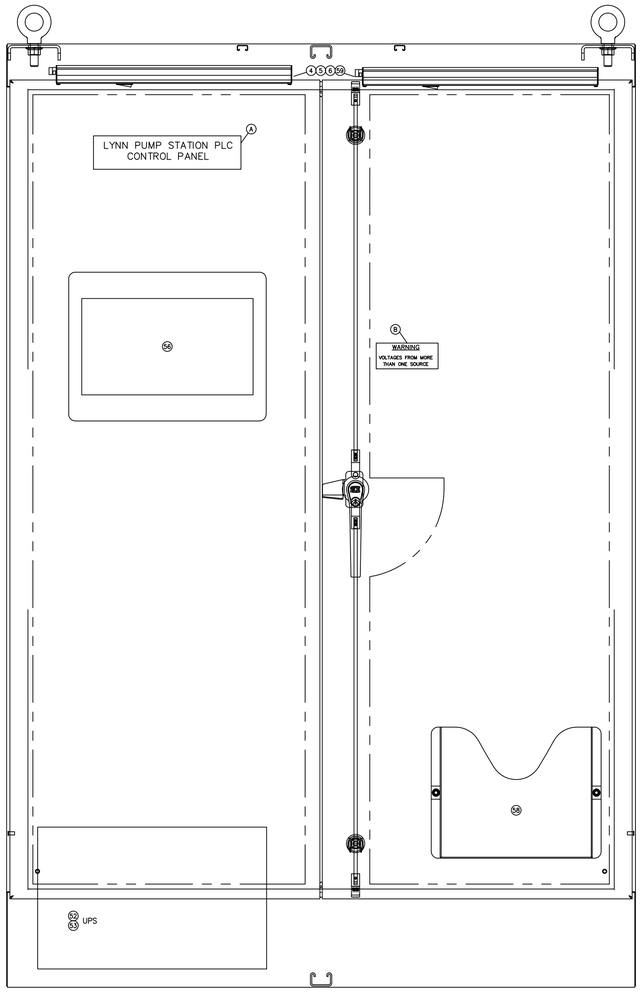

FRONT ELEVATION EXTERIOR
SCALE: NTS

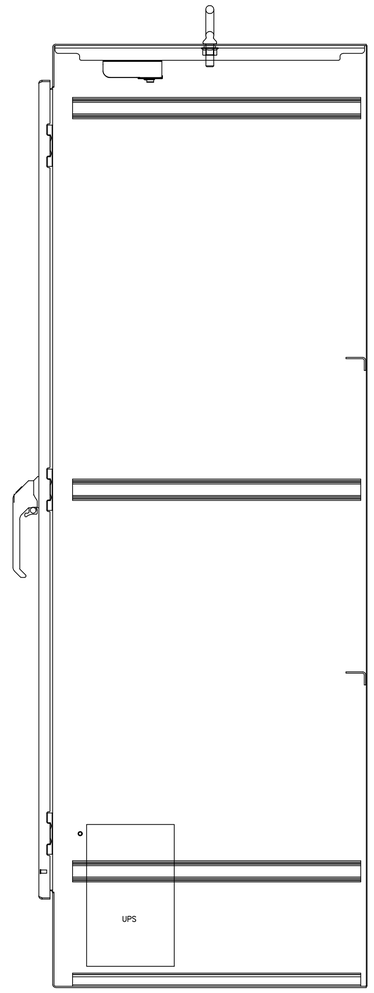

SIDE ELEVATION EXTERIOR
SCALE: NTS

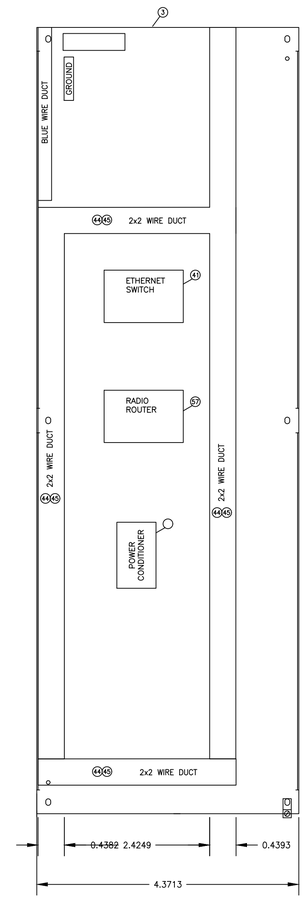

INTERIOR SIDE ELEVATION LEFT
SCALE: NTS

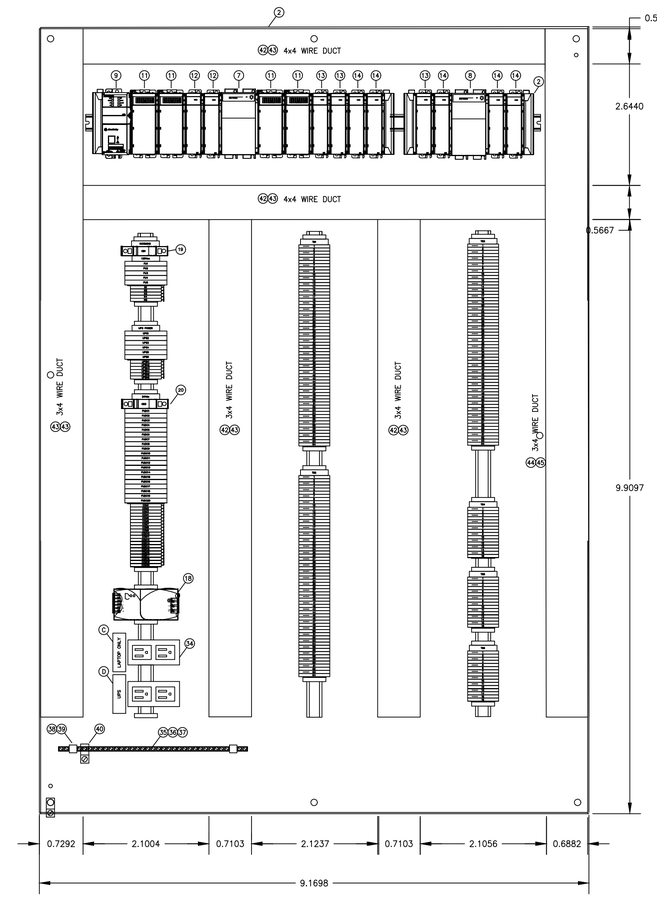

INTERIOR ELEVATION
SCALE: NTS

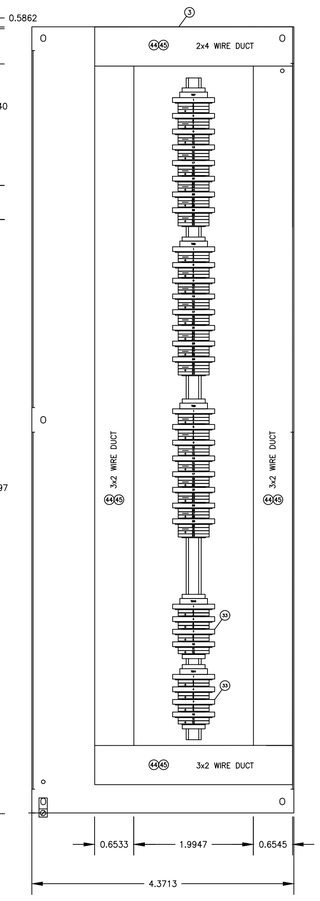

INTERIOR SIDE ELEVATION RIGHT
SCALE: NTS

REV	DATE	BY	DESCRIPTION

SCALE: NONE

WARNING: 0 ½ 1 — IF THIS BAR DOES NOT MEASURE 1" THEN DRAWING IS NOT TO SCALE

DATE: JULY 31, 2019
DRAWN BY: T COSMA
DESIGNED BY: P RELF
CHECKED BY:
APPROVED BY:

60% DESIGN
NOT FOR CONSTRUCTION

This document is an interim document and not suitable for construction. As an interim document, it may contain data that is potentially inaccurate or incomplete and is not to be relied upon without the express written consent of the preparer.

Stantec

LYNN WATER & SEWER COMMISSION

LYNN WATER AND SEWER COMMISSION

PHASE 3 WEST LYNN SEWER SEPARATION

INSTRUMENTATION AND CONTROLS GENERAL CONTROL PANEL TYPICAL LAYOUT

SHEET IG-06

195130174

BILL OF MATERIAL

ITEM	DESCRIPTION	MANUFACTURER	PART NUMBER
1	TYPE 12 ENCLOSURE (72x60x24)		SCE-724824FSD
2	FULL SIZE MOUNTING PANEL		SCE-72P48F1
3	SIDE MOUNT PANEL		SCE-72SMP20
4	LED PANEL LIGHT FIXTURE	PENTAIR PANELITE	LED24V15
5	IED PANEL LIGHT POWER CONNECTOR CORD	PENTAIR PANELITE	LGCABLE24
6	LED LIGHT FIXTURE POWER ADAPTER	PENTAIR PANELITE	LED24CORD
7	COMPACTLOGIX POWER SUPPLY 30A 24VDC	AB	1769-PB4
8	COMPACTLOGIX POWER SUPPLY 30A 24VDC	AB	1769-PB2
9	COMPACTLOGIX CONTROLLER	AB	1769-L33ER
10	CONTROLLER MEMORY COMPACT FLASH CARD 1GB	AB	1784-SD1/A
11	DISCRETE INPUT MODULE 24VDC 32 Pt.	AB	1769-IQ32
12	DISCRETE OUTPUT MODULE RELAY 8 Pt.	AB	1769-OW8I
13	ANALOG INPUT MODULE 8 Pt.	AB	1769-IF4I
14	ANALOG OUTPUT MODULE 8 Pt.	AB	1769-OF4CI
15	END CAP (RIGHT END)	AB	1769-ECR
16	DIN RAIL T35 STEEL (SPECIFIC TO PLC)	AB	-
17	RELAY OUTPUT CARD JUMPER BAR	AB	97739201
18	24VDC POWER SUPPLY 10A	WEIDMULLER	8951360000
19	15A 1 POLE AND 1 NEUTRAL CIRCUIT BREAKER	AB	1492-SP1B150-N
20	10A 1 POLE CIRCUIT BREAKER	AB	1492-SP1B100
21	ASK1 EN/SMT FUSED TERMINAL BLOCK	WEIDMULLER	0222760001
22	SAK4/EN FEED-THROUGH TERMINAL BLOCK	WEIDMULLER	046746000
23	WTR 2.5 KNIFE SWITCH TERMINAL BLOCK	WEIDMULLER	1855610000
24	EK4/35 PROTECTIVE EARTH TERMINAL	WEIDMULLER	0661160000
25	WQB B / 24 CROSS CONNECTION STRIPS	WEIDMULLER	1579060000
26	ScHT 5S PROTECTIVE STRIPS	WEIDMULLER	1631930000
27	STR 5S PROTECTIVE STRIPS	WEIDMULLER	1631940000
28	WEW 35 / 2 END BRACKET	WEIDMULLER	0383560000
29	WAP END PLATE (ASK1)	WEIDMULLER	0380360000
30	WAP END PLATE (SAK4)	WEIDMULLER	0117960000
31	WS 12 / 5 TERMINAL MARKERS, CUSTOM NUMBERS	WEIDMULLER	1609870000
32	WS 12 / 6 TERMINAL MARKERS, CUSTOM NUMBERS	WEIDMULLER	1609910000
33	DIN RAIL TS35 SLOTTED	WEIDMULLER	514500000
34	120VAC RAIL MOUNT RECPETACLE	WEIDMULLER	9915490000
35	GROUND BAR NSch 15x2 80A	WEIDMULLER	280200000
36	PRESSURE PIECE DKSUE	WEIDMULLER	280100000
37	CLAMPING SCREW BFSC M5x8	WEIDMULLER	296700000
38	BUSBAR HOLDER BASE SH1	WEIDMULLER	401460000
39	BUSBAR HOLDER CLIP SH1	WEIDMULLER	635960000
40	GROUND LUG #2 / 0	T&B	ADR21
41	STRATIX 8000 10-PORT SWITCH W/ 8-PORT COPPER EXPANSION	AB	1783-MS10T; 1585J-M8TBJM-1M9; 1783-MX08T
42	WIRE DUCT 3"x4"	PANDUIT	G3X4LG6
43	3" WIRE DUCT COVER	PANDUIT	C3LG6
44	WIRE DUCT 2"x4"	PANDUIT	G2X4LG6
45	2" WIRE DUCT COVER	PANDUIT	C2LG6
46	1A GLASS FUSE	BUSSMANN	GMA-1-R
47	2A GLASS FUSE	BUSSMANN	GMA-2-R
48	4A GLASS FUSE	BUSSMANN	GMA-4-R
49	5A GLASS FUSE	BUSSMANN	GMA-5-R
50	10A GLASS FUSE	BUSSMANN	GMA-10-R
51	15A GLASS FUSE	BUSSMANN	GMA-15-R
52	1500VA 120VAC UPS	EATON	9130 1500
53	RELAY OUTPUT CARD FOR THE UPS	EATON	1014018
55	120VAC, 20A TRANSIENT VOLTAGE SURGE SUPRESSOR	SOLA	STV25K-10S
56	15" VERSAVIEW INDUSTRIAL COMPUTER	AB	
57	APRISA SR RADIO ROUTER	4RF	
58	DOCUMENT POCKET		
59	DOOR SWITCH AND CABLE	PENTAIR PANELITE	ALFSWD; LDSWITCH72

LABEL	TEXT DESCRIPTION	COLOR (BKGD/LTTR)	SIZE (WxH)	QTY.
A	LYNN PUMP STATION CONTROL PANEL	WHT/BLK	90x75	1
B	WARNING / VOLTAGES FROM MORE / THAN ONE SOURCE	RED/WHT	125x75	1
C	LAPTOP ONLY	WHT/BLK	25x10	1
D	UPS	WHT/BLK	25x10	1

REV	DATE	BY	DESCRIPTION

SCALE

NONE

WARNING

0 ½ 1

IF THIS BAR DOES NOT MEASURE 1" THEN DRAWING IS NOT TO SCALE

DATE JULY 31, 2019

DRAWN BY T COSMA

DESIGNED BY P RELF

CHECKED BY

APPROVED BY

60% DESIGN
NOT FOR CONSTRUCTION

This document is an interim document and not suitable for construction. As an interim document, it may contain data that is potentially inaccurate or incomplete and is not to be relied upon without the express written consent of the preparer.

Stantec

LYNN WATER & SEWER COMMISSION

LYNN WATER AND SEWER COMMISSION

PHASE 3 WEST LYNN SEWER SEPARATION

INSTRUMENTATION AND CONTROLS GENERAL
CONTROL PANEL BILL OF MATERIALS

SHEET

IG-07

195130174

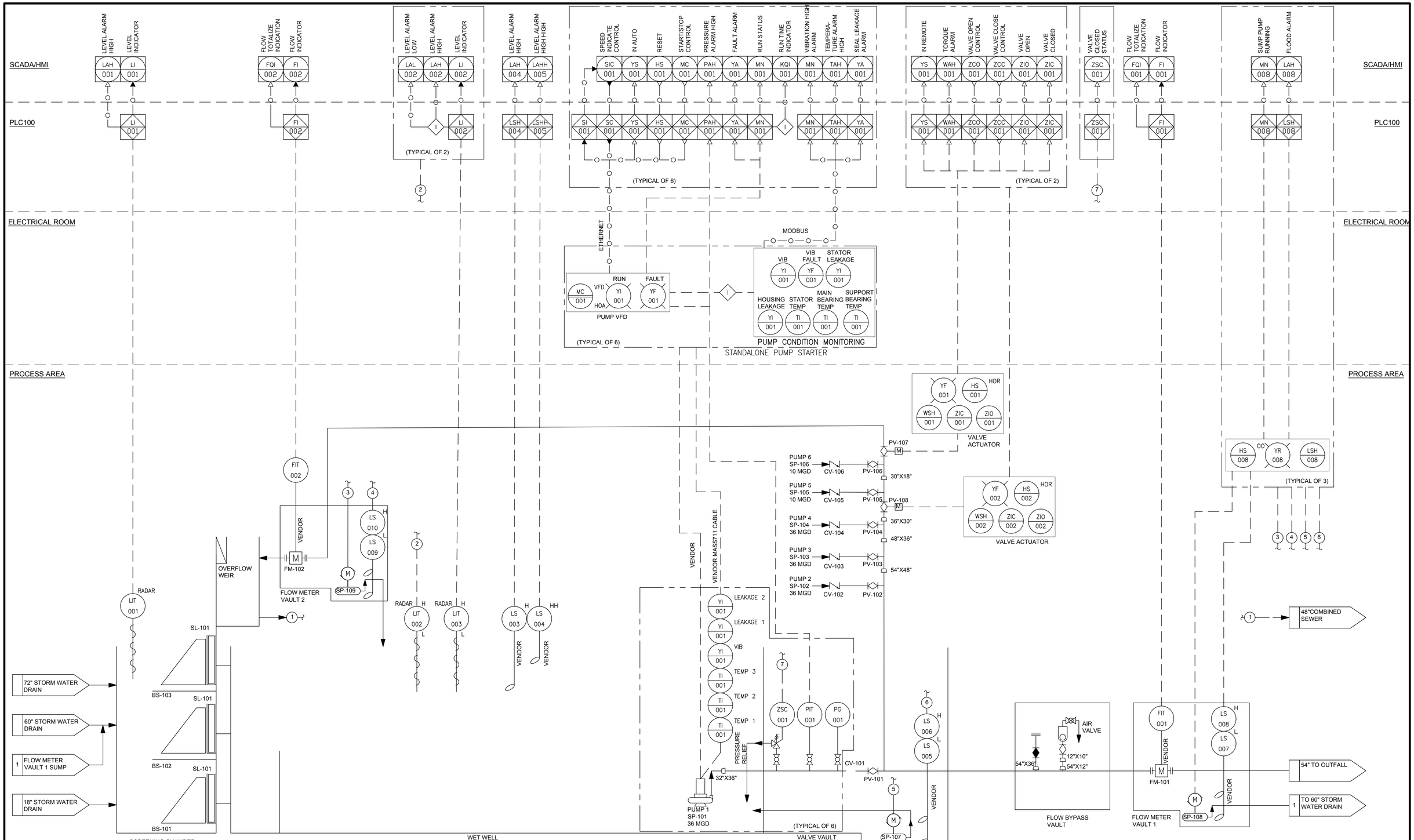

REV	DATE	BY	DESCRIPTION

SCALE: NONE

WARNING: 0 ½ 1 — IF THIS BAR DOES NOT MEASURE 1" THEN DRAWING IS NOT TO SCALE

DATE: JULY 31, 2019
DRAWN BY: T COSMA
DESIGNED BY: P RELF
CHECKED BY:
APPROVED BY:

60% DESIGN
NOT FOR CONSTRUCTION

This document is an interim document and not suitable for construction. As an interim document, it may contain data that is potentially inaccurate or incomplete and is not to be relied upon without the express written consent of the preparer.

Stantec

LYNN WATER & SEWER COMMISSION

LYNN WATER AND SEWER COMMISSION

PHASE 3 WEST LYNN SEWER SEPARATION

INSTRUMENTATION AND CONTROLS GENERAL
P&ID - I

SHEET
IG-08

195130174

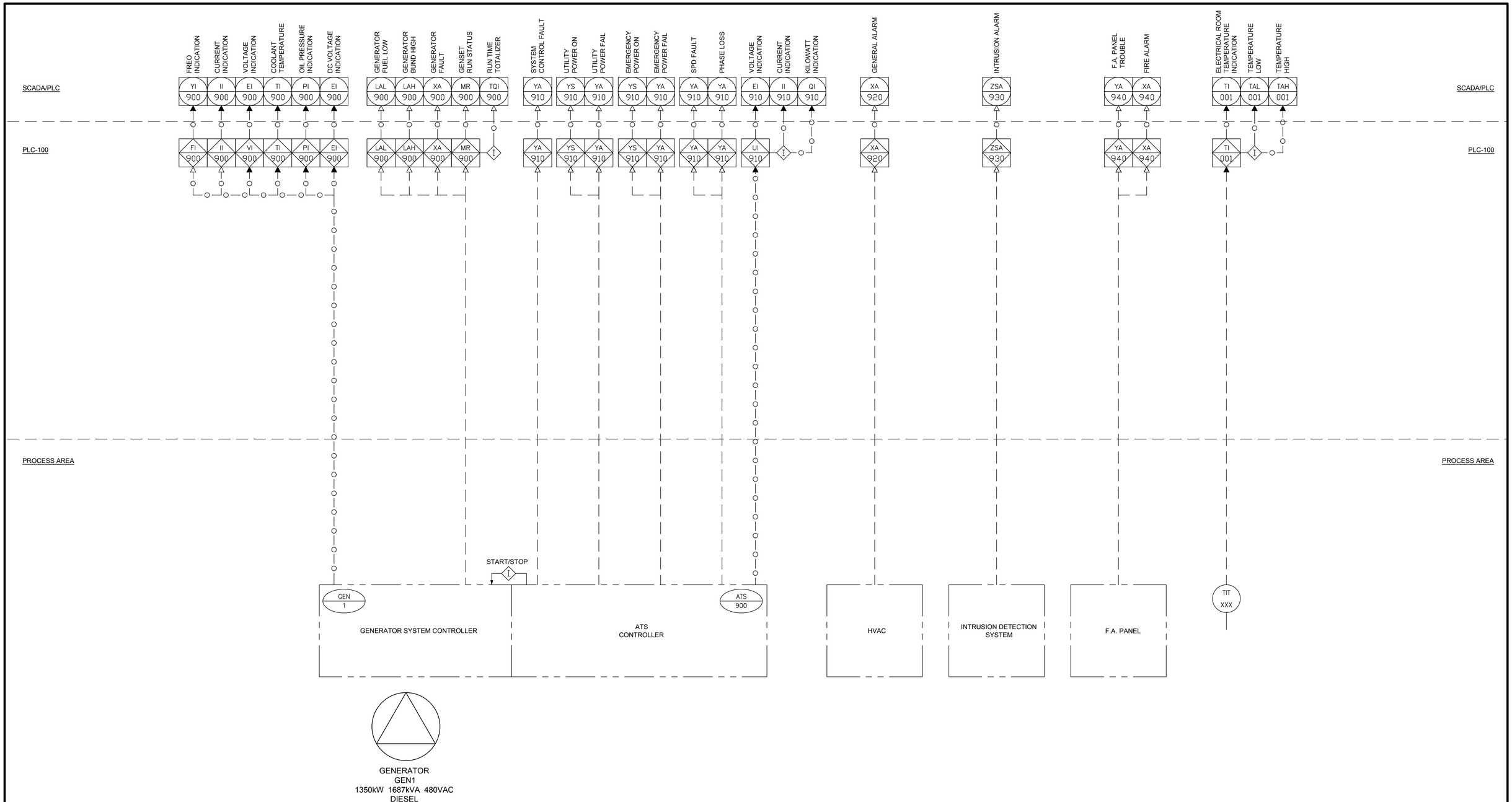

REV	DATE	BY	DESCRIPTION

SCALE: NONE

WARNING: 0 ½ 1 — IF THIS BAR DOES NOT MEASURE 1" THEN DRAWING IS NOT TO SCALE

DATE: JULY 31, 2019
DRAWN BY: T COSMA
DESIGNED BY: P RELF
CHECKED BY:
APPROVED BY:

60% DESIGN
NOT FOR CONSTRUCTION

This document is an interim document and not suitable for construction. As an interim document, it may contain data that is potentially inaccurate or incomplete and is not to be relied upon without the express written consent of the preparer.

Stantec

LYNN WATER & SEWER COMMISSION

LYNN WATER AND SEWER COMMISSION

PHASE 3 WEST LYNN SEWER SEPARATION

INSTRUMENTATION AND CONTROLS GENERAL
P&ID - II

SHEET
IG-09

195130174

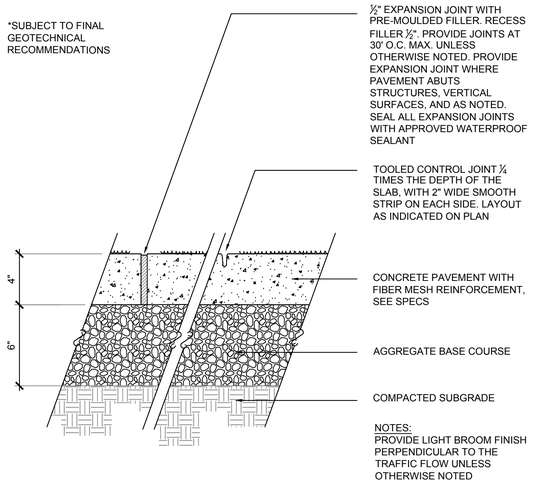

CEMENT CONCRETE PAVEMENT (1)

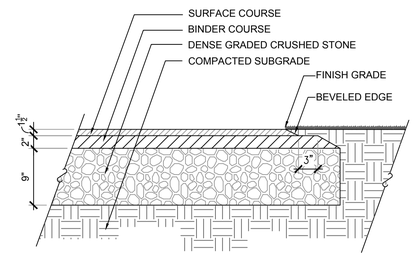

NOTE: ALL PAVEMENT EDGES WITHOUT A RIGID RESTRAINT SHALL BE HAND-TAMPED

BITUMINOUS CONCRETE PAVEMENT (2)

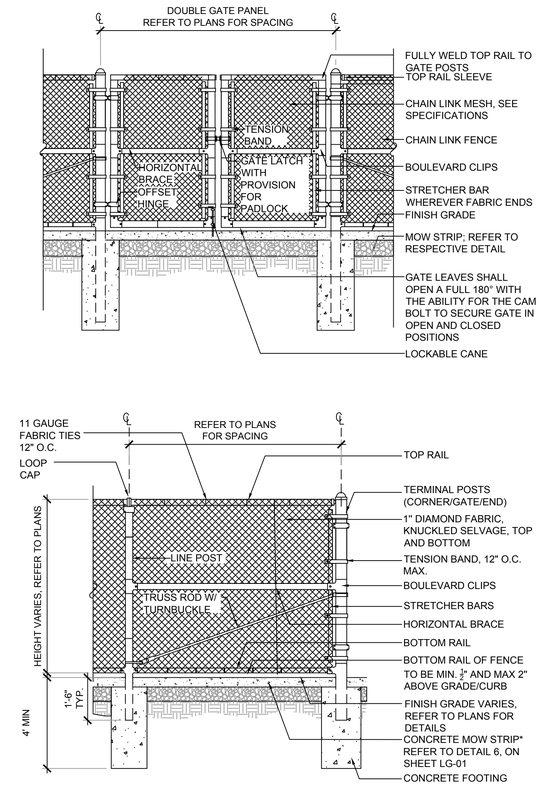

CHAIN LINK FENCE AND DOUBLE GATE (3)

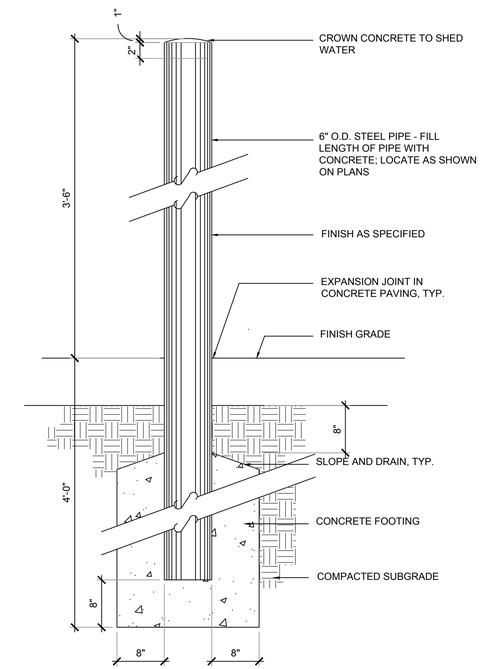

BOLLARD (4)

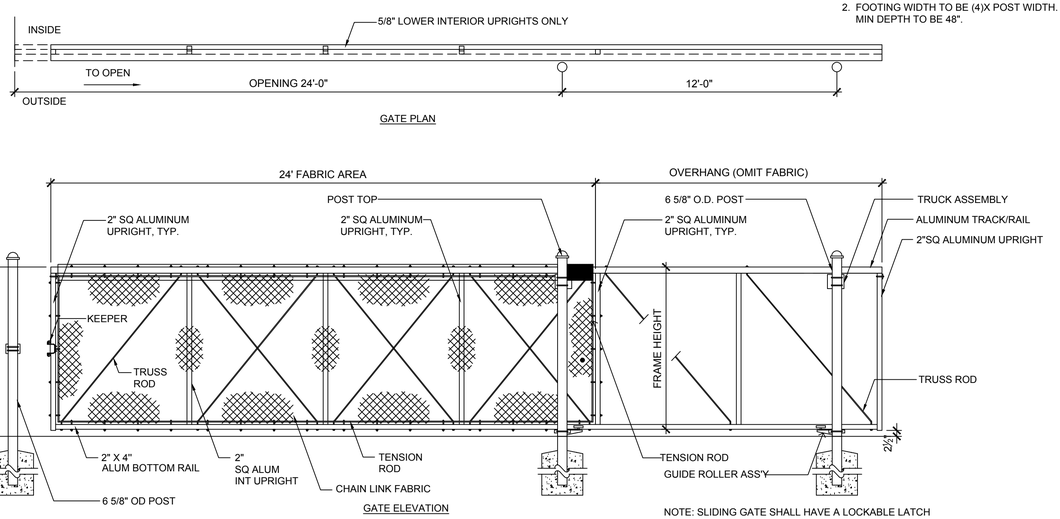

SLIDING GATE (5)

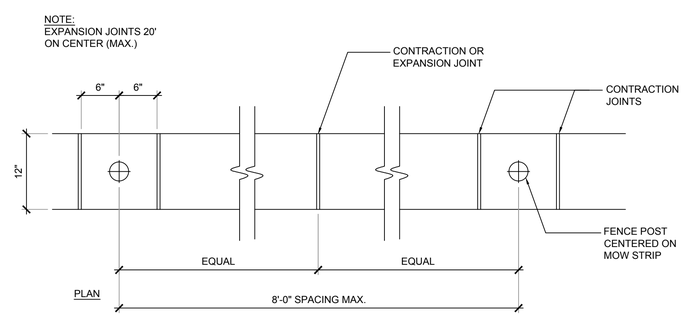

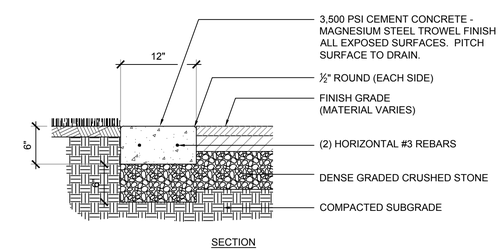

MOW STRIP (6)

REV	DATE	BY	DESCRIPTION

SCALE: NOT TO SCALE

WARNING: 0 ½ 1 — IF THIS BAR DOES NOT MEASURE 1" THEN DRAWING IS NOT TO SCALE

DATE	JULY 31, 2019
DRAWN BY	J SCHOENDORF
DESIGNED BY	K BEUTTELL
CHECKED BY	
APPROVED BY	

60% DESIGN
NOT FOR CONSTRUCTION

This document is an interim document and not suitable for construction. As an interim document, it may contain data that is potentially inaccurate or incomplete and is not to be relied upon without the express written consent of the preparer.

Stantec

LYNN WATER & SEWER COMMISSION

LYNN WATER AND SEWER COMMISSION

PHASE 3 WEST LYNN SEWER SEPARATION

LANDSCAPE GENERAL DETAILS

SHEET LG-01

195130174

DWG FILE: V:\2108\active\210801568\civil\LYNN_details.dwg
PLOT DATE: Wednesday, March 07, 2018
BY: SCHOENDORF, JESS

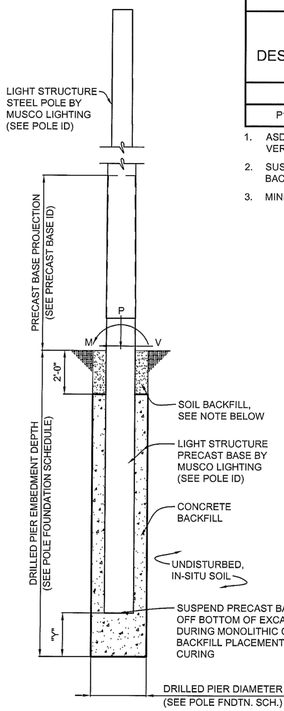

POLE FOUNDATION ELEV.

SCALE: NOT TO SCALE

SOIL BACKFILL NOTE:
THE TOP TWO FEET OF ANNULUS SHALL BE BACKFILLED WITH SOIL, WITH A CLASSIFICATION OF CLASS 5 (TABLE 1806.2) OR BETTER. COMPACTION, 95% FOR COHESIVE SOIL AND 98% FOR A COHESIONLESS SOIL BASED UPON STANDARD PROCTOR TESTING (ASTM D698).

POLE FOUNDATION SCHEDULE

POLE DESIGNATION	FORCES (1.)			DRILLED PIER			
	MOMENT (M) FT-LBS	SHEAR (V) LBS	VERTICAL (P) LBS	DIAMETER INCHES	EMBEDMENT DEPTH	SUSPENSION "Y" (2.)	CONCRETE BACKFILL YD^3 (3.)
B1, B2	49,395	1,400	1,324	30	12'-0"	2'-0"	1.6
P1, P2, T1-T4	15,883	642	469	30	10'-0"	2'-0"	1.4

1. ASD LOAD COMBINATION D + W.
   VERTICAL FORCE IS WEIGHT OF DRESSED POLE (DOES NOT INCLUDE PRECAST BASE WEIGHT)
2. SUSPEND PRECAST BASE "Y" OFF THE BOTTOM OF THE EXCAVATION DURING MONOLITHIC CONCRETE BACKFILL PLACEMENT AND CURING.
3. MINIMUM CONCRETE BACKFILL VOLUME, SITE CONDITIONS MAY REQUIRE ADDITIONAL BACKFILL.

PRECAST BASE IDENTIFICATION

PRECAST BASE TYPE	PRECAST BASE WEIGHT	PRECAST BASE LENGTH	PROJECTION ABOVE GRADE	STANDARD EMBEDMENT	OUTSIDE DIAMETER
1B	920 LBS	15'-2"	7'-2"	8'-0"	9.56"
2B	1,690 LBS	17'-3"	7'-3"	10'-0"	12.00"

POLE IDENTIFICATION

POLE DESIGNATION	POLE TYPE	PRECAST BASE TYPE	FIXTURE CONFIGURATION (FIX. PER XARM)	FIXTURE AND ACCESSORIES EPA (FT^2)
B1, B2	LSS50B	2B	10 (6+4)	15.2
P1, P2, T1-T4	LSS40A	1B	2 (2)	2.7

DESIGN NOTES

DESIGN PARAMETERS:
WIND: 105 MPH (EXP. C, I = 1.0) PER IBC CODE, 2009 EDITION (ASCE 7-05).

GEOTECHNICAL PARAMETERS:
ALLOWABLE END BEARING SOIL PRESSURE: 3,500 PSF
REQUIRED ALLOWABLE END BEARING SOIL PRESSURE: 1,000 PSF
ALLOWABLE LATERAL SOIL BEARING PRESSURE:
0 PSF/FT (GRADE TO -2'-0"); VARIES, SEE SOIL REPORT (BELOW -2'-0")
IN ACCORDANCE WITH THE 2009 EDITION OF THE INTERNATIONAL BUILDING CODE, CHAPTER 18.

DESIGN SOIL PARAMETERS ARE AS NOTED. ACTUAL ALLOWABLE SOIL PARAMETERS MUST BE VERIFIED ON SITE. REFERENCE GEOTECHNICAL INVESTIGATION REPORT, FILE NO. 210801398, PREPARED BY STANTEC; BURLINGTON, MA.

A GEOTECHNICAL ENGINEER OR REPRESENTATIVE OF IS RECOMMENDED (NOT REQUIRED) TO BE AVAILABLE AT THE TIME OF THE FOUNDATION INSTALLATION TO VERIFY THE SOIL DESIGN PARAMETERS AND TO PROVIDE ASSISTANCE IF ANY PROBLEMS ARISE IN FOUNDATION INSTALLATION.

ENCOUNTERING SOIL FORMATIONS THAT WILL REQUIRE SPECIAL DESIGN CONSIDERATIONS OR EXCAVATION PROCEDURES MAY OCCUR. POLE FOUNDATIONS WILL NEED TO BE ANALYZED ACCORDING TO THE SOIL CONDITIONS THAT EXIST. IF ANY DISCREPANCIES OR INCONSISTENCIES ARISE, NOTIFY THE ENGINEER OF SUCH DISCREPANCIES. FOUNDATIONS WILL THEN BE REVISED ACCORDINGLY. REVISIONS WILL BE ANALYZED PER RECOMMENDATIONS DIRECTED BY A REGISTERED ENGINEER.

ALL EXCAVATIONS MUST BE FREE OF LOOSE SOIL AND DEBRIS PRIOR TO FOUNDATION INSTALLATION AND CONCRETE BACKFILL PLACEMENT. TEMPORARY CASINGS OR DRILLERS SLURRY MAY BE USED TO STABILIZE THE EXCAVATION DURING INSTALLATION. CASINGS MUST BE REMOVED DURING CONCRETE BACKFILL PLACEMENT. CONCRETE BACKFILL MUST BE PLACED WITH A TREMIE WHEN SLURRY OR WATER IS PRESENT WITHIN THE EXCAVATION OR WHEN THE FREE DROP EXCEEDS 6'-0".

CONTRACTOR MUST BE FAMILIAR WITH THE COMPLETE SOIL INVESTIGATION REPORT AND BORINGS, AND CONTACT THE GEOTECHNICAL FIRM (IF NECESSARY) TO UNDERSTAND THE SOIL CONDITIONS AND THE POSSIBILITY OF GROUND WATER PUMPING AND EXCAVATION STABILIZATION OR BRACING DURING PRECAST BASE INSTALLATION AND PLACEMENT OF CONCRETE BACKFILL.

CONCRETE:
CONCRETE SHALL BE AIR-ENTRAINED AND HAVE A MINIMUM COMPRESSIVE DESIGN STRENGTH AT 28 DAYS OF 3,000 PSI. 3,000 PSI CONCRETE SPECIFIED FOR EARLY POLE ERECTION, ACTUAL REQUIRED MINIMUM ALLOWABLE CONCRETE STRENGTH IS 1,000 PSI. ALL PIERS AND CONCRETE BACKFILL MUST BEAR ON AND AGAINST FIRM UNDISTURBED SOIL.

GENERAL NOTES:
FIXTURES MUST BE LOCATED TO MAINTAIN 10'-0" MINIMUM HORIZONTAL CLEARANCE FROM ANY OBSTRUCTION. ENGINEER MUST BE NOTIFIED IF FOUNDATIONS ARE NEAR ANY RETAINING WALLS OR WITHIN / NEAR ANY SLOPES STEEPER THAN 3H : 1V. POLES, FIXTURES, PRECAST BASES, ELECTRICAL ITEMS AND INSTALLATION PER MUSCO LIGHTING.

ATHLETIC POLE FOUNDATION (PLACEHOLDER) 1

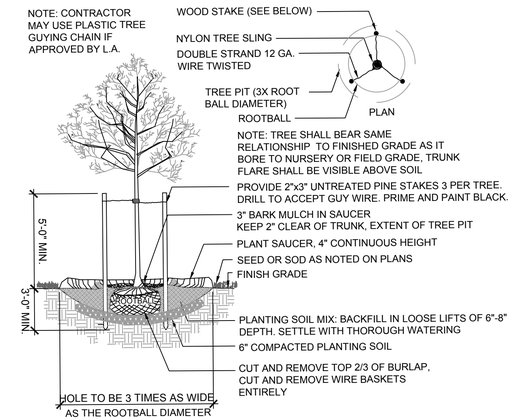

DECIDUOUS/ORNAMENTAL TREE PLANTING 2

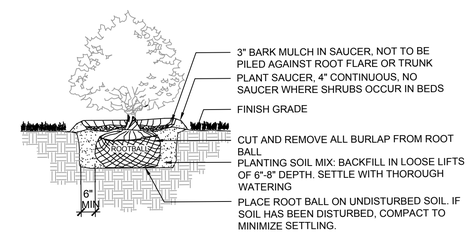

NOTES:
1. SHRUB SHALL BEAR SAME RELATIONSHIP TO FINISH GRADE AS IT BORE TO NURSERY OR FIELD GRADE.
2. WHERE SHRUBS OCCUR IN GROUPINGS IN PLANT BEDS, PROVIDE 2-FOOT DEEP CONTINUOUS LOAM BED.

SHRUB PLANTING 3

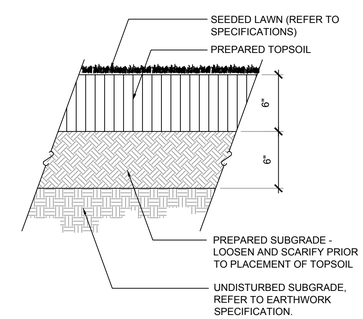

LOAM AND SEED 4

REV	DATE	BY	DESCRIPTION

SCALE: NOT TO SCALE

WARNING: 0 ½ 1 — IF THIS BAR DOES NOT MEASURE 1" THEN DRAWING IS NOT TO SCALE

DATE: JULY 31, 2019
DRAWN BY: J SCHOENDORF
DESIGNED BY: K BEUTTELL
CHECKED BY:
APPROVED BY:

60% DESIGN
NOT FOR CONSTRUCTION

This document is an interim document and not suitable for construction. As an interim document, it may contain data that is potentially inaccurate or incomplete and is not to be relied upon without the express written consent of the preparer.

Stantec

LYNN WATER & SEWER COMMISSION

LYNN WATER AND SEWER COMMISSION
PHASE 3 WEST LYNN SEWER SEPARATION
LANDSCAPE GENERAL DETAILS

SHEET LG-02

195130174

DWG FILE: V:\2108\active\210801568\Lynn\LYNN_details.dwg
PLOT DATE: Wednesday, March 07, 2018
BY: SCHOENDORF, JESS

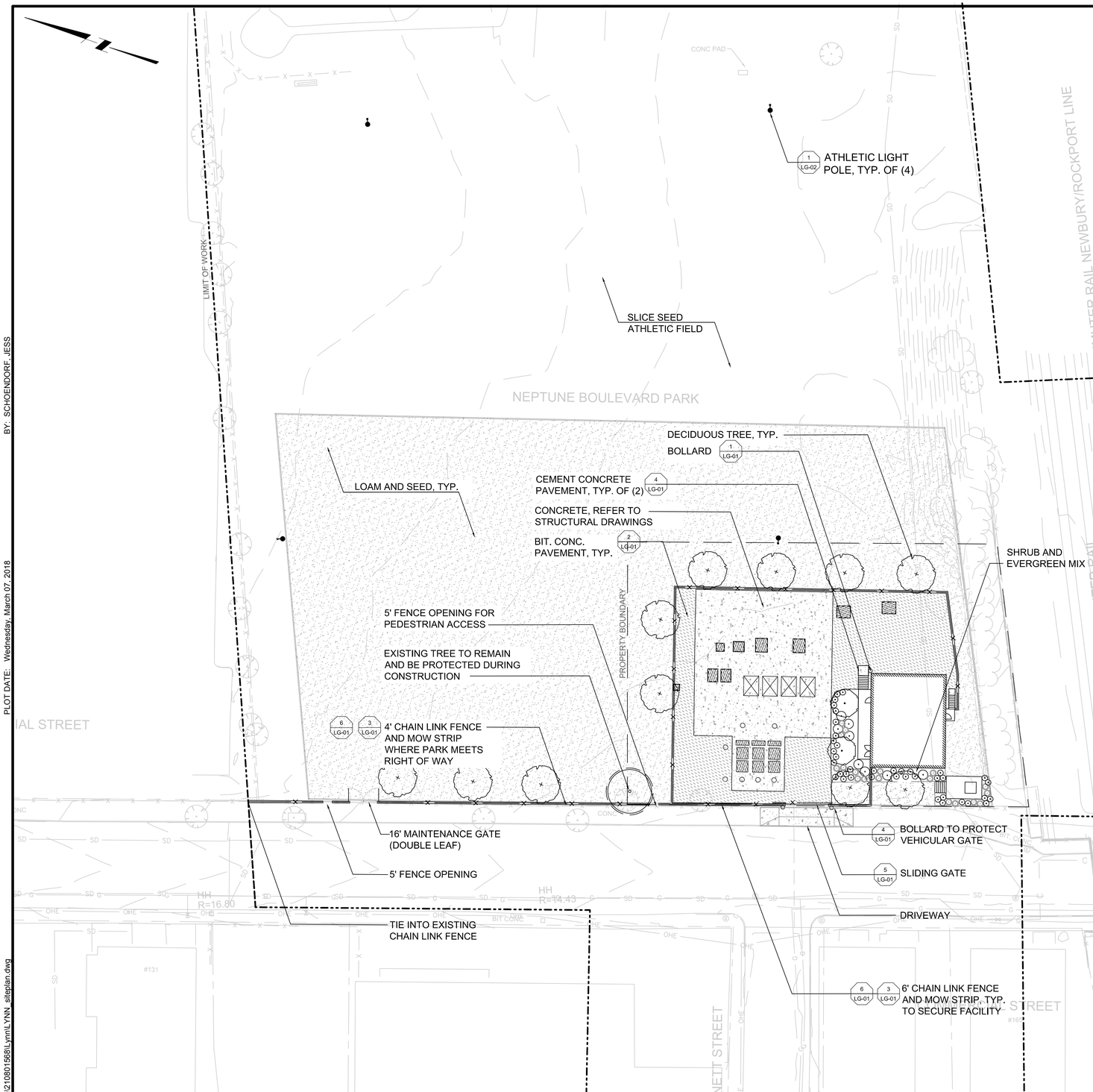

IRRIGATION NOTES

1. CONTRACTOR SHALL PROVIDE LABOR, MATERIALS, AND EQUIPMENT NECESSARY TO MAINTAIN A FUNCTIONAL IRRIGATION SYSTEM DURING AND AFTER CONSTRUCTION.
2. CONTRACTOR SHALL SUBMIT A PROPOSED IRRIGATION SYSTEM PLAN AND SHOP DRAWINGS FOR APPROVAL.

LEGEND

- EXISTING TREE
- DECIDUOUS TREE
- ORNAMENTAL TREE
- DECIDUOUS SHRUB
- EVERGREEN SHRUB
- LOAM AND SEED
- LIMIT OF WORK
- PROPERTY LINE
- PLANT BED / MULCH EDGE
- CHAIN LINK FENCE WITH MOW STRIP
- BITUMINOUS CONCRETE PAVEMENT
- CEMENT CONCRETE PAVEMENT

PLANT SCHEDULE

SYMBOL	BOTANICAL NAME	COMMON NAME
DECIDUOUS TREES		
PA	PLATANUS X ACERIFOLIA	LONDON PLANETREE
QC	QUERCUS COCCINEA	SCARLET OAK
AR	ACER RUBRUM	RED MAPLE
ORNAMENTAL TREES		
CC	CERCIS CANADENSIS	EASTERN REDBUD
DECIDUOUS SHRUBS		
FG	FOTHERGILLA GARDENII	DWARF FOTHERGILLA
CA	CLETHRA ALNIFOLIA 'HUMMINGBIRD'	SWEET PEPPERBUSH
EVERGREEN SHRUBS		
BM	BUXUS MICROPHYLLA 'GREEN PILLOW'	BOXWOOD
IL	ILEX CRENATA 'HELLERI'	JAPANESE HOLLY

GENERAL SHEET NOTES

1. THE LOCATIONS OF UNDERGROUND UTILITIES SHOWN ARE BASED ON THE SURVEY REFERENCED ABOVE. THE CONTRACTOR SHALL CONTACT DIGSAFE AND THE PROPER LOCAL AUTHORITIES OR RESPECTIVE UTILITY COMPANIES TO CONFIRM THE LOCATION OF ALL EXISTING UTILITIES BEFORE COMMENCING WORK. ANY DAMAGE DUE TO FAILURE OF THE CONTRACTOR TO CONTACT THE PROPER AUTHORITIES SHALL BE BORNE BY THE CONTRACTOR.
2. CONTRACTOR SHALL BEGIN MAINTENANCE IMMEDIATELY AFTER PLANTING AND WILL CONTINUE UNTIL FINAL WRITTEN ACCEPTANCE OF PLANT MATERIAL.
3. CONTRACTOR SHALL MAINTAIN POSITIVE DRAINAGE AWAY FROM ALL BUILDING FOUNDATIONS AND STRUCTURES.
4. THE LANDSCAPE CONTRACTOR SHALL SUPPLY ALL PLANT MATERIALS IN QUANTITIES SUFFICIENT TO COMPLETE ALL PLANTINGS SHOWN ON THIS DRAWING.
5. MULCH FOR PLANTED AREAS TO BE AGED PINE BARK: PARTIALLY DECOMPOSED, DARK BROWN IN COLOR AND FREE OF WOOD CHIPS THICKER THAN 1/4 INCH.
6. THE LANDSCAPE CONTRACTOR SHALL GUARANTEE ALL PLANT MATERIALS FOR ONE (1) FULL YEAR FROM DATE OF ACCEPTANCE.
7. ALL PLANT MATERIALS ARE SUBJECT TO THE APPROVAL OF THE LANDSCAPE ARCHITECT, AT THE NURSERY, AND AT THE SITE.
8. ALL AREAS OF THE SITE WHICH HAVE BEEN DISTURBED AND NOT OTHERWISE DEVELOPED SHALL BE LOAMED AND SEEDED WITH A MINIMUM DEPTH OF 6" DEPTH TOPSOIL.
9. PLANT SPECIES AS INDICATED IN THE PLANT LIST ARE SUGGESTIONS ONLY. FINAL SELECTION OF SPECIES SHALL OCCUR AT THE TIME OF PLANT PURCHASE, DEPENDING ON AVAILABILITY. PLANT SIZE AND QUANTITY SHALL NOT CHANGE WITHOUT APPROVAL OF OWNER'S REPRESENTATIVE.
10. ANY DISCREPANCIES BETWEEN DRAWINGS, SPECIFICATIONS, AND SITE CONDITIONS SHALL BE REPORTED IMMEDIATELY TO THE OWNER'S REPRESENTATIVE FOR CLARIFICATION AND RESOLUTION PRIOR TO BIDDING OR CONSTRUCTION.
11. ALL WORK CONDUCTED WITHIN PUBLIC RIGHT-OF-WAYS SHALL CONFORM TO THE REQUIREMENTS AND SPECIFICATIONS OF THE CITY OF LYNN AND THE MASSACHUSETTS DEPARTMENT OF TRANSPORTATION (MASSDOT).
12. SEE ARCHITECTURAL DRAWINGS FOR EXACT BUILDING DIMENSIONS AND ALL DETAILS CONTIGUOUS TO THE BUILDING, INCLUDING SIDEWALKS, RAMPS, UTILITY ENTRANCE LOCATIONS, WALL PACKS, CONCRETE DOOR PADS, ROOF DRAINS, ETC.
13. ACCESSIBLE CURB RAMPS SHALL BE PER THE MASSACHUSETTS ARCHITECTURAL ACCESS BOARD (AAB) AND THE AMERICANS WITH DISABILITIES ACT (ADA) ACCESSIBILITY GUIDELINES, WHICHEVER IS MORE STRINGENT.
14. FOR LAYOUT AND DIMENSIONING OF BUILDINGS, SEE ARCHITECTURAL DRAWINGS.
15. SCREENED IMAGES SHOW EXISTING CONDITIONS. WHERE EXISTING CONDITIONS LIE UNDER OR ARE IMPINGED UPON BY PROPOSED BUILDINGS AND/OR SITE ELEMENTS, THE EXISTING CONDITION WILL BE REMOVED, ABANDONED AND/OR CAPPED OR DEMOLISHED AS REQUIRED.

DWG FILE: V:\2108\active\210801568\Lynn\LYNN_siteplan.dwg
PLOT DATE: Wednesday, March 07, 2018
BY: SCHOENDORF, JESS

REV	DATE	BY	DESCRIPTION

SCALE: AS SHOWN

WARNING: 0 ½ 1 — IF THIS BAR DOES NOT MEASURE 1" THEN DRAWING IS NOT TO SCALE

DATE: JULY 31, 2019
DRAWN BY: J SCHOENDORF
DESIGNED BY: K BEUTTELL
CHECKED BY:
APPROVED BY:

60% DESIGN
NOT FOR CONSTRUCTION

This document is an interim document and not suitable for construction. As an interim document, it may contain data that is potentially inaccurate or incomplete and is not to be relied upon without the express written consent of the preparer.

Stantec

LYNN WATER & SEWER COMMISSION

LYNN WATER AND SEWER COMMISSION
PHASE 3 WEST LYNN SEWER SEPARATION
LANDSCAPE SITE PLAN

SHEET L-01

195130174

LEGEND

—— ——	PROPERTY LINE
-·-·-·-	LIMIT OF WORK LINE
+	SPOTGRADE
	CATCHBASIN
	TRANSFORMER

GENERAL SHEET NOTES

1. EXISTING CONDITIONS INFORMATION IS REPRODUCED FROM THE SURVEY PREPARED BY KEVIN HANLEY OF SMC, SURVEY AND MAPPING CONSULTANTS AND IS DATED JULY 13,2018.
2. PRIOR TO THE START OF ANY EXCAVATION FOR THE PROJECT, BOTH ON AND OFF THE SITE, THE CONTRACTOR SHALL NOTIFY DIGSAFE AND BE PROVIDED WITH A DIGSAFE NUMBER INDICATING THAT ALL EXISTING UTILITIES HAVE BEEN LOCATED AND MARKED.
3. WHERE PROPOSED GRADES MEET EXISTING GRADES, CONTRACTOR SHALL BLEND GRADES TO PROVIDE A SMOOTH TRANSITION BETWEEN EXISTING AND NEW WORK. PONDING AT TRANSITION AREAS WILL NOT BE ALLOWED.
4. CONTRACTOR SHALL MAINTAIN POSITIVE DRAINAGE AWAY FROM ALL BUILDING FOUNDATIONS, STRUCTURES AND PLANTING BEDS
5. MAXIMUM SLOPE IN DISTURBED AREAS SHALL NOT EXCEED 3:1, UNLESS OTHERWISE NOTED.
6. THE CONTRACTOR SHALL MEET THE REQUIREMENTS OF 521 CMR OF THE ARCHITECTURAL ACCESS BOARD REGULATIONS. ALL GRADES ON WALKWAYS, RAMPS, CURB CUTS AND PARKING AREAS AS DEFINED BY 521 CMR SHALL COMPLY WITH THE MAXIMUM ALLOWABLE GRADES. GRADES SHALL BE MEASURED AT TWO FOOT INTERVALS. CROSS SLOPES ON ALL WALKS, PATHS OF TRAVEL AND ACCESSIBLE ROUTES AS DEFINED IN 521 CMR SHALL NOT EXCEED 1.5%. THE CONTRACTOR SHALL NOTIFY THE ARCHITECT IMMEDIATELY IF DISCREPANCIES ARISE BETWEEN THE ACTUAL GRADES SHOWN ON THE PLANS AND THE MAXIMUM ALLOWABLE GRADES INDICATED IN 521 CMR.
7. ALL WALKWAYS SHALL BE GRADED TO A MAXIMUM 4.5% RUNNING SLOPE (PARALLEL TO THE DIRECTION OF TRAVEL). THE CROSS PITCH OF ALL WALKWAYS, PATHS AND PLAZAS SHALL NOT EXCEED 1.5% (PERPENDICULAR TO THE DIRECTION OF TRAVEL). THE SLOPE OF ALL RAMPS AND SIDE SLOPES OF HANDICAP CURB CUTS AS DEFINED BY SECTION 21.1 OF 521 CMR SHALL BE CONSTRUCTED AT 7.5% MAXIMUM. RAMPS AS DEFINED IN SECTION 24.1 OF 521 CMR SHALL BE CONSTRUCTED TO A MAXIMUM SLOPE OF 7.5%.
8. ENSURE ALL EXISTING (TO REMAIN), AND PROPOSED MANHOLE COVERS PROPERLY IDENTIFY UTILITY SERVICED.
9. CONTRACTOR SHALL VERIFY EXISTING GRADES AND NOTIFY OWNER'S REPRESENTATIVE OF ANY DISCREPANCIES.
10. BITUMINOUS CONCRETE ELEVATIONS AT CATCH BASINS TO BE 1/4 INCH ABOVE RIM ELEVATION SHOWN FOR CATCH.
11. CONTRACTOR TO ADJUST UTILITY ELEMENT MEANT TO BE FLUSH WITH GRADE (CLEAN-OUTS, UTILITY MANHOLES, CATCH BASINS, INLETS, ETC) THAT IS AFFECTED BY SITE WORK OR GRADE CHANGES, WHETHER SPECIFICALLY NOTED ON PLANS OR NOT.
12. SCREENED IMAGES SHOW EXISTING CONDITIONS. WHERE EXISTING CONDITIONS LIE UNDER OR ARE IMPINGED UPON BY PROPOSED BUILDINGS AND/OR SITE ELEMENTS, THE EXISTING CONDITION WILL BE REMOVED, ABANDONED AND/OR CAPPED OR DEMOLISHED AS REQUIRED.

REV	DATE	BY	DESCRIPTION

SCALE: AS SHOWN

WARNING: 0 ½ 1 — IF THIS BAR DOES NOT MEASURE 1" THEN DRAWING IS NOT TO SCALE

DATE: JULY 31, 2019
DRAWN BY: J SCHOENDORF
DESIGNED BY: K BEUTTELL
CHECKED BY:
APPROVED BY:

60% DESIGN
NOT FOR CONSTRUCTION

This document is an interim document and not suitable for construction. As an interim document, it may contain data that is potentially inaccurate or incomplete and is not to be relied upon without the express written consent of the preparer.

Stantec

LYNN WATER & SEWER COMMISSION

LYNN WATER AND SEWER COMMISSION

PHASE 3 WEST LYNN SEWER SEPARATION

LANDSCAPE
GRADING PLAN

SHEET L-02

195130174

DWG FILE: V:\2108\active\210801568\Lynn\LYNN_GRADING.dwg
PLOT DATE: Wednesday, March 07, 2018
BY: SCHOENDORF, JESS

TRAFFIC GENERAL NOTES:

1. ALL TEMPORARY TRAFFIC CONTROL WORK SHALL CONFORM TO THE LATEST EDITION OF THE "MANUAL ON UNIFORM TRAFFIC CONTROL DEVICES" (MUTCD) AND ALL REVISIONS, UNLESS SUPERCEDED BY THESE PLANS.
2. ALL SIGN LEGENDS, BORDERS, AND MOUNTING SHALL BE IN ACCORDANCE WITH THE MUTCD.
3. TEMPORARY CONSTRUCTION SIGNING AND ALL OTHER TRAFFIC CONTROL DEVICES AND SAFETY DEVICES SHALL BE IN PLACE PRIOR TO THE START OF ANY WORK.
4. TEMPORARY CONSTRUCTION SIGNING, BARRICADES, AND ALL OTHER NECESSARY WORK ZONE TRAFFIC CONTROL DEVICES SHALL BE REMOVED FROM THE TRAVELED WAY OR COVERED WHEN THEY ARE NOT REQUIRED FOR CONTROL OF TRAFFIC.
5. SIGNS AND SIGN SUPPORTS LOCATED ON OR NEAR THE TRAVELED WAY, CHANNELIZING DEVICES, BARRIERS, AND CRASH ATTENUATORS MUST PASS THE CRITERIA SET FORTH IN NCHRP REPORT 350, "RECOMMENDED PROCEDURES FOR THE SAFETY PERFORMANCE EVALUATION OF HIGHWAY FEATURES" AND/OR "MANUAL FOR ASSESSING SAFETY HARDWARE" (MASH).
6. THE CONTRACTOR SHALL NOTIFY EACH ABUTTER AT LEAST 24 HOURS IN ADVANCE OF THE START OF ANY WORK THAT WILL REQUIRE THE TEMPORARY CLOSURE OF ACCESS, SUCH AS CONDUIT INSTALLATION, EXISTING PAVEMENT EXCAVATION, TEMPORARY DRIVEWAY PAVEMENT PLACEMENT, AND SIMILAR OPERATIONS.
7. THE FIRST FIVE PLASTIC DRUMS OF A TAPER SHALL BE MOUNTED WITH TYPE A LIGHTS.
8. THE ADVISORY SPEED LIMIT, IF REQUIRED, SHALL BE DETERMINED BY THE ENGINEER.
9. DISTANCES ARE A GUIDE AND MAY BE ADJUSTED IN THE FIELD BY THE ENGINEER.
10. MAXIMUM SPACING OF TRAFFIC DEVICES IN A TAPER (DRUMS OR CONES) IS EQUAL IN FEET TO THE SPEED LIMIT IN MPH.
11. MINIMUM LANE WIDTH IS TO BE 11 FEET UNLESS OTHERWISE SHOWN. MINIMUM LANE WIDTH TO BE MEASURED FROM THE EDGE OF DRUMS OR MEDIAN BARRIER.
12. ALL SIGNS SHALL BE MOUNTED ON THEIR OWN STANDARD SIGN SUPPORTS.
13. THE CONTRACTOR SHALL REFERENCE THE PROJECT SPECIFICATIONS REGARDING STREET SPECIFIC TIMES OF ALLOWABLE WORK ZONE OPERATIONS.
14. THE CONTRACTOR SHALL REFERENCE THE PART VI STANDARDS AND GUIDES FOR TRAFFIC CONTROLS FOR STREET AND HIGHWAY CONSTRUCTION, MAINTENANCE, UTILITY AND INCIDENT MANAGEMENT OPERATIONS OF THE MANUAL ON UNIFORM TRAFFIC CONTROL DEVICES (MUTCD) (LATEST EDITION). THE CONTRACTOR SHALL CONFORM TO THE MINIMUM REQUIREMENTS AS OUTLINED IN THIS DOCUMENT AND AS DETAILED IN THE PLANS.
15. AT LOCATIONS WHERE THE WORK ZONE REQUIRES A SERIES OF MUTCD DETAIL TREATMENTS IN COMBINATION (SEE PLANS), THE CONTRACTOR SHALL ONLY INSTALL THE REQUIRED ADVANCE WARNING SIGNING FOR THE APPROACH OF THE FIRST WORK ZONE IN SERIES UNLESS THE SECOND WORK ZONE IS MORE RESTRICTIVE. THE CONTRACTOR SHALL ALSO PROVIDE THE REQUIRED EXIT WORK ZONE SIGNING FOR THE LAST OF THE COMBINED WORK ZONES IN SERIES. SIGNING SHALL BE PROVIDED FOR THE AVAILABLE LENGTH THAT THE STREET WILL ACCOMMODATE.
16. AT CONSTRUCTION SIGN INSTALLATIONS AND/OR ATTACHMENTS TO BARRICADES DEVICES SHALL MEET THE MINIMUM REQUIREMENTS AS OUTLINED IN THE MUTCD PART VI STANDARD DOCUMENT. SIGNS SHALL BE VISIBLE AND INSTALLED SECURELY TO EITHER AN EXISTING SIGN POLE CAPABLE OF SUPPORTING THE WEIGHT OF THE SIGN TO BE POSTED (WITH THE APPROVAL THE CITY OF LYNN), OR TO A TEMPORARY BARRICADE DEVICE WHICH WILL NOT BE SUSCEPTIBLE TO WIND.
17. ALL WORK ZONES SHALL BE EFFECTIVELY PROTECTED AND CORDONED OFF FROM OFF-TIME ACCESS BY VEHICLES AND PEDESTRIANS. NO OPEN HOLE TRENCHES WILL BE ALLOWED AT THE END OF A WORK DAY. SUCH LOCATIONS WILL REQUIRE STEEL PLATING INSTALLED FLUSH WITH THE EXISTING GROUND SURFACE TO AVOID CREATING EITHER A TRIPPING HAZARD OR A VIOLATION TO ADA STANDARDS.
18. CONTRACTOR SHALL REFERENCE THE PROJECT SPECIFICATIONS REGARDING THOSE STREETS ALLOWING ABUTTER ACCESS ONLY. THE CONTRACTOR MUST NOTIFY LYNN FIRE, POLICE AND EMS 48 HOURS IN ADVANCE OF WORK ZONE LOCATIONS, DURATION OF ACTIVITY AND OF ANY DETOURS OR CLOSURES THAT MAY RESULT.
19. THE CONTRACTOR SHALL PROVIDE ACCESS FOR EMERGENCY VEHICLES AT ALL TIMES.
20. THE CONTRACTOR SHALL ESTABLISH A SIDEWALK DETOUR PLAN PRIOR TO CONSTRUCTION THAT SAFELY CONVEYS PEDESTRIANS ACROSS THE INTERSECTIONS. THE DETOUR ROUTE SHALL BE LOCATED TO PROVIDE ADEQUATE SIGHT DISTANCES OF ONCOMING VEHICLE FROM EVERY DIRECTION AND SAFE PASSAGE FOR PEDESTRIANS.
21. THE CONTRACTOR SHALL SUBMIT TO THE ENGINEER FOR REVIEW A PLAN FOR ACCOMMODATING THE VEHICULAR AND PEDESTRIAN TRAFFIC ASSOCIATED WITH THE BUSINESSES AFFECTED BY THE WORK. THE CONTRACTOR MUST COORDINATE WITH THE BUILDING OWNER PRIOR TO PERFORMING ACTIVITIES WHICH WILL IMPACT BUSINESSES IN THE AREA, INCLUDING LOADING DOCKS, PARKING LOTS AND GARAGES THAT SERVE LOCAL BUSINESSES. A MINIMUM 4 FT WIDE SIDEWALK SHALL BE MAINTAINED DURING ALL PHASES OF CONSTRUCTION WHERE APPLICABLE.
22. IF THE CONTRACTOR OBSTRUCTS ANY SIDEWALK WITHIN THE WORK ZONE, SIGNING SHALL BE POSTED WARNING PEDESTRIANS THAT THE SIDEWALK IS CLOSED.
23. PEDESTRIAN ACCESS TO LOCAL BUSINESSES AND OTHER BUILDINGS SHALL BE MAINTAINED AT ALL TIMES. THE CONTRACTOR SHALL REFERENCE THE PROJECT SPECIFICATIONS.
24. THE CONTRACTOR MUST COORDINATE WITH AND PROVIDE 48 HOURS ADVANCE NOTICE TO THE PUBLIC TRANSIT AUTHORITY REGARDING RELOCATION OF EXISTING BUS STOPS TO TEMPORARY OR ALTERNATIVE LOCATIONS. RELOCATED BUS STOPS WILL BE TEMPORARILY SIGNED TO CLEARLY IDENTIFY THE TEMPORARY PICKUP/DROP OFF LOCATION DURING CONSTRUCTION.
25. THE CONTRACTOR SHALL BE AWARE OF EXISTING LOADING ZONES WITHIN THE WORK ZONE. ALTHOUGH THESE LOADING ZONES MAY NOT BE MAINTAINED DURING CONSTRUCTION, THE CONTRACTOR MUST COORDINATE WITH ALL COMMERCIAL BUSINESSES REGARDING THEIR DELIVERY VEHICLE SCHEDULE TO BEST ACCOMMODATE VEHICLE ACCESS DURING CONSTRUCTION.
26. THE CONTRACTOR SHALL IMPLEMENT ALL MEASURES NECESSARY TO CONSTRUCT UTILITIES WITHOUT DISTURBING EXISTING DRIVEWAYS AND SHALL MAINTAIN UNINTERRUPTED ACCESS/EGRESS TO EXISTING DRIVEWAYS DURING ALL PHASES OF CONSTRUCTION.
27. LANE RESTRICTIONS MAY NOT REMAIN OVERNIGHT. DRUMS SHALL BE PLACED OFF THE EDGE OF PAVEMENT DURING NON-WORK HOURS.
28. NO TRAFFIC CONTROL DEVICES SHALL REMAIN ON THE ROADWAY AT THE END OF EACH WORKDAY, COVER SIGNS AS NECESSARY WHEN NOT IN USE.
29. ALL WARNING SIGNS SHALL BE BLACK LEGEND ON A REFLECTIVE ORANGE BACKGROUND.
30. ALL DRUMS SHALL BE PLACED APPROPRIATELY OR MOVED AS NECESSARY TO MAINTAIN ADEQUATE ABUTTER ACCESS AT ALL TIMES.
31. THE CONTRACTOR SHALL COORDINATE WITH THE CITY OF LYNN POLICE DEPARTMENT ON POSTING 'NO PARKING' SIGNS.
32. THE CONTRACTOR SHALL COVER ALL CONFLICTING PAVEMENT MARKINGS WITH PREFORMED BLACK LINE MASK PAVEMENT MARKING TAPE OR REMOVE BY AN APPROVED METHOD.
33. UPON COMPLETION OF THE PERMANENT PAVEMENT REPAIRS, THE CONTRACTOR SHALL FURNISH AND INSTALL PERMANENT PAVEMENT MARKINGS (I.E., CENTERLINES, LANE LINES, STOP BARS, CROSSWALKS, ETC.) OF THE SAME SIZE AND TYPE WHICH EXISTED PRIOR TO THE CONTRACTOR'S ACTIVITIES.
34. THE CONTRACTOR SHALL MAINTAIN TRAFFIC SIGNALS AT ALL TIMES.
35. THE CONTRACTOR SHALL REPLACE TRAFFIC DETECTOR LOOPS WHERE EXISTING LOOPS ARE REMOVED OR DAMAGED DURING CONSTRUCTION.
36. A LONGITUDINAL BUFFER SPACE SHALL BE UTILIZED IN ADVANCE OF WORK AREAS. SEE THE LATEST EDITION OF THE MUTCD PART VI FOR GUIDELINES AND DETAILS.
37. CONTRACTOR MUST MAINTAIN A MINIMUM TRAVEL LANE OPEN AT ALL TIMES AS SHOWN ON THE PLANS.
38. TEMPORARY TRAFFIC CONTROL SIGN LOCATIONS AND ROADWAY TAPER LENGTHS SHALL BE BASED ON THE ROAD TYPE AND SPEED LIMITS.

SUGGESTED WORK ZONE WARNING SIGN SPACING

ROAD TYPE	DISTANCE BETWEEN SIGNS **		
	A	B	C
LOCAL OR LOW VOLUME ROADWAYS*	350	350	350
MOST OTHER ROADWAYS*	500	500	500
FREEWAYS AND EXPRESSWAYS*	1,000	1,500	2,640

* ROAD TYPE TO BE DETERMINED BY THE RESIDENT ENGINEER.

** DISTANCES ARE SHOWN IN FEET. THE COLUMN HEADINGS A, B, AND C ARE THE DIMENSIONS SHOWN IN THE DETAIL/ TYPICAL SETUP FIGURES. THE A DIMENSION IS THE DISTANCE FROM THE TRANSITION OR POINT OF RESTRICTION TO THE FIRST SIGN. THE B DIMENSION IS THE DISTANCE BETWEEN THE FIRST AND SECOND SIGNS. THE C DIMENSION IS THE DISTANCE BETWEEN THE SECOND AND THIRD SIGNS. (THE "THIRD" SIGN IS THE FIRST ONE TYPICALLY ENCOUNTERED BY A DRIVER APPROACHING A TEMPORARY TRAFFIC CONTROL (TTC) ZONE.)

THE "THIRD" SIGN ABOVE IS TYPICALLY REFERRED TO AS AN "ADVANCE WARNING" SIGN ON THE TTCP SETUPS. THESE ADVANCE WARNING SIGNS ARE LOCATED PRIOR TO THE PROJECT LIMITS ON ALL APPROACHES (i.e. THE W20-1 SERIES (ROAD WORK XX FT) SIGNS), AND USUALLY REMAIN FOR THE DURATION OF THE PROJECT. ADDITIONAL SIGNS (i.e. "RIGHT LANE CLOSED 1 MILE" AND "LEFT LANE CLOSED 1 MILE") HAVE BEEN SHOWN IN SOME FIGURES AS EXAMPLES OF REINFORCEMENT SIGN PLACEMENT BUT ARE USED IN RARE OCCASIONS.

THE FIRST AND SECOND WARNING SIGNS ABOVE ARE REFERRED TO AS THE OPERATIONAL (DAY-TO-DAY) WORK ZONE SIGNS AND MAY BE MOVED DEPENDING ON WHERE THE SPECIFIC ROADWAY WORK FOR THAT DAY IS LOCATED.

R2-10a SIGNS SHALL BE PLACED BETWEEN THE SECOND AND THIRD SIGNS AS DESCRIBED ABOVE.

R2-10a, R2-10e, AND W20-1 SERIES SIGNS ARE TO BE INCLUDED ON ALL DETAILS/TYPICAL SETUPS.

Based on: Table 6C-1 MUTCD LATEST EDITION

STOPPING SIGHT DISTANCE AS A FUNCTION OF SPEED

SPEED* (mph)	DISTANCE (ft)
20	115
25	155
30	200
35	250
40	305
45	360
50	425
55	495
60	570
65	645
70	730
75	820

*POSTED SPEED, OFF-PEAK 85TH-PERCENTILE SPEED PRIOR TO WORK STARTING, OR THE ANTICIPATED OPERATING SPEED

THESE VALUES MAY BE USED TO DETERMINE THE LENGTH OF LONGITUDINAL BUFFER SPACES.

THE DISTANCES IN THE ABOVE CHART REPRESENT THE MINIMAL VALUES FOR BUFFER SPACING.

Source: Table 6C-2 MUTCD LATEST EDITION

LEGEND:

- REFLECTORIZED PLASTIC DRUM OR 36" CONE
- P/F POLICE/FLAGGER DETAIL
- TYPE III BARRICADE
- CHANGEABLE MESSAGE SIGN
- ARROW BOARD
- WORK ZONE
- DIRECTION OF TRAFFIC
- IMPACT ATTENUATOR
- MEDIAN BARRIER
- MEDIAN BARRIER WITH WARNING LIGHTS
- WORK VEHICLE
- TRUCK MOUNTED ATTENUATOR
- TRAFFIC OR PEDESTRIAN SIGNAL
- SIGN

REV	DATE	BY	DESCRIPTION

SCALE: NO SCALE

WARNING: 0 ½ 1 — IF THIS BAR DOES NOT MEASURE 1" THEN DRAWING IS NOT TO SCALE

DATE: JULY 31, 2019
DRAWN BY: D HUDSON
DESIGNED BY: D HUDSON
CHECKED BY: E MAKI
APPROVED BY:

60% DESIGN
NOT FOR CONSTRUCTION

This document is an interim document and not suitable for construction. As an interim document, it may contain data that is potentially inaccurate or incomplete and is not to be relied upon without the express written consent of the preparer.

Stantec

TETRA TECH

LYNN WATER & SEWER COMMISSION

LYNN WATER AND SEWER COMMISSION

PHASE 3 WEST LYNN SEWER SEPARATION

TRAFFIC GENERAL
LEGEND AND NOTES

SHEET
TG-01

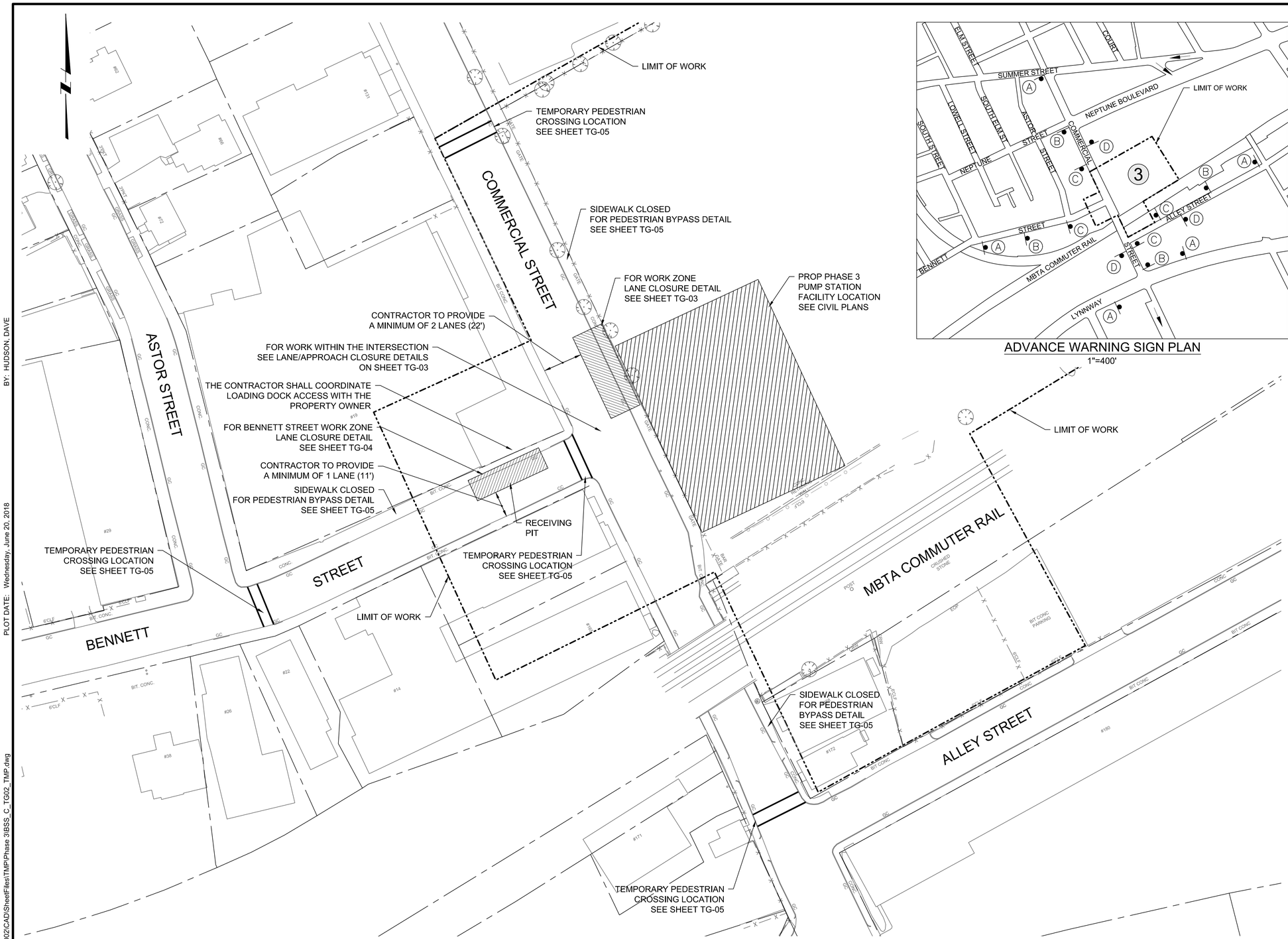

STREET PLAN
1"=40'

ADVANCE WARNING SIGN PLAN
1"=400'

SIGN LEGEND:

A			B		
ROAD WORK AHEAD			ROAD NARROWS OR ONE LANE ROAD XXX		
			W5-1 W20-4		
			*DEPENDING ON TYPE OF ROAD CLOSURE		
SIZE (INCHES)	MUTCD #	SUPPORTS	SIZE (INCHES)	MUTCD #	SUPPORTS
36	W20-1	1	36	*SEE ABOVE	1
C			D		
POLICE OFFICER AHEAD			END ROAD WORK		
SIZE (INCHES)	MUTCD #	SUPPORTS	SIZE (INCHES)	MUTCD #	SUPPORTS
36	MA-W20-7b	1	48x18	G20-2	1

LEGEND:

- (3) WLSS PHASE NUMBER
- → ONE WAY STREET
- APPROX SIGN LOCATION

0 400 800
SCALE IN FEET

0 40 80
SCALE IN FEET

REV	DATE	BY	DESCRIPTION

SCALE: AS SHOWN

WARNING: 0 ½ 1 — IF THIS BAR DOES NOT MEASURE 1" THEN DRAWING IS NOT TO SCALE

DATE	JULY 31, 2019
DRAWN BY	D HUDSON
DESIGNED BY	D HUDSON
CHECKED BY	E MAKI
APPROVED BY	

60% DESIGN
NOT FOR CONSTRUCTION

This document is an interim document and not suitable for construction. As an interim document, it may contain data that is potentially inaccurate or incomplete and is not to be relied upon without the express written consent of the preparer.

Stantec

TETRA TECH

LYNN WATER & SEWER COMMISSION

LYNN WATER AND SEWER COMMISSION

PHASE 3 WEST LYNN SEWER SEPARATION

TRAFFIC GENERAL
ADVANCE WARNING SIGN PLAN & STREET PLAN

SHEET
TG-02

195130174

DWG FILE: P:\54675\200-54675-18002\CAD\SheetFiles\TMP\Phase 3\BSS_C_TG02_TMP.dwg
PLOT DATE: Wednesday, June 20, 2018
BY: HUDSON, DAVE

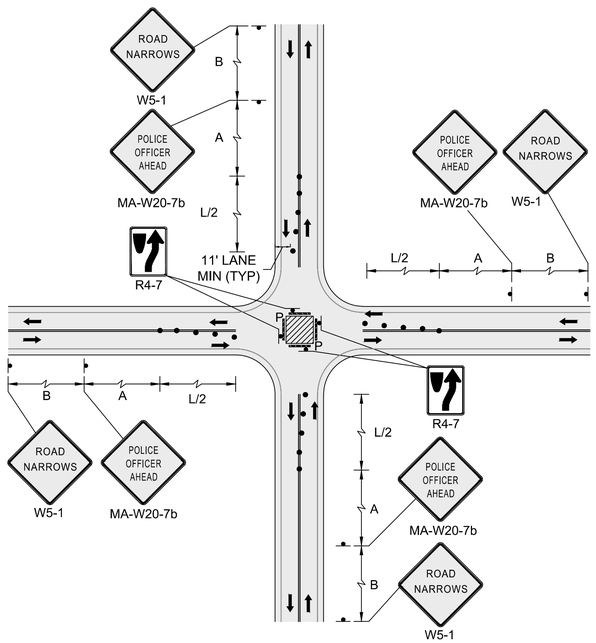

SINGLE LANE APPROACH
CENTER CLOSURE

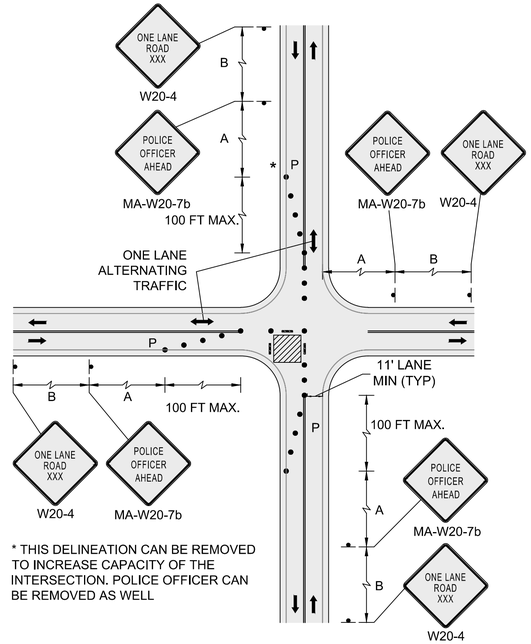

* THIS DELINEATION CAN BE REMOVED TO INCREASE CAPACITY OF THE INTERSECTION. POLICE OFFICER CAN BE REMOVED AS WELL

SINGLE LANE APPROACH ONE
QUADRANT CLOSURE

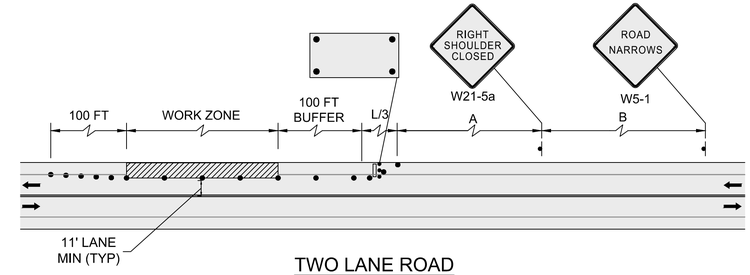

TWO LANE ROAD
SHOULDER CLOSED

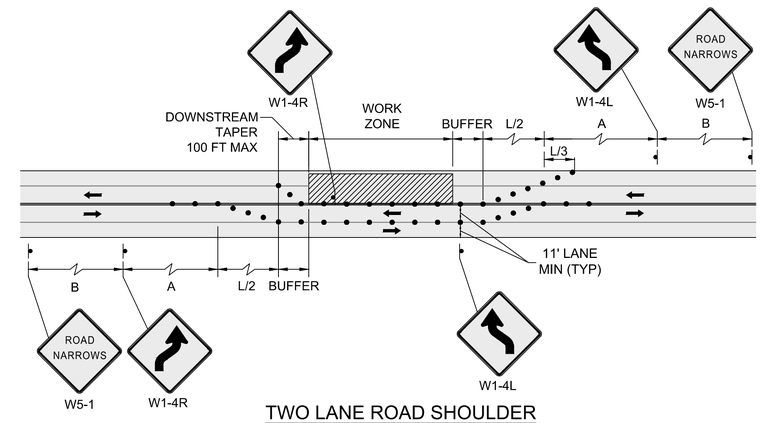

TWO LANE ROAD SHOULDER
AND TRAVEL LANE CLOSED

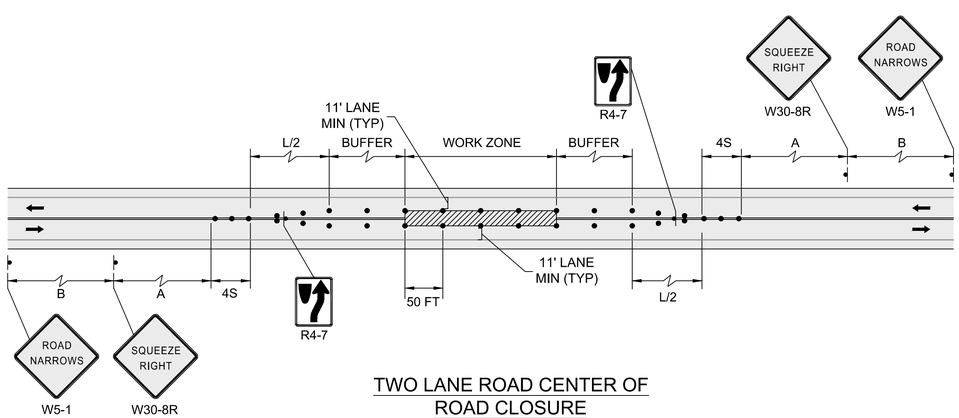

TWO LANE ROAD CENTER OF
ROAD CLOSURE

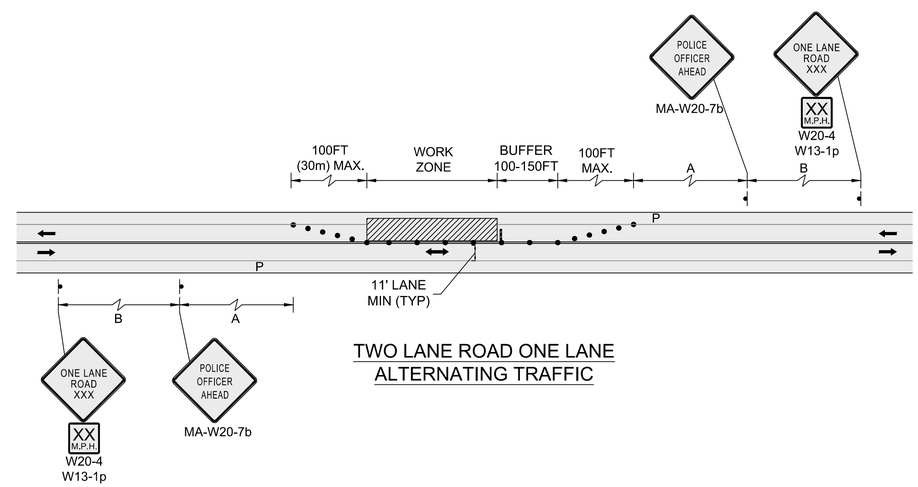

TWO LANE ROAD ONE LANE
ALTERNATING TRAFFIC

REV	DATE	BY	DESCRIPTION

SCALE: NO SCALE

WARNING: 0 ½ 1 — IF THIS BAR DOES NOT MEASURE 1" THEN DRAWING IS NOT TO SCALE

DATE: JULY 31, 2019
DRAWN BY: D HUDSON
DESIGNED BY: D HUDSON
CHECKED BY: E MAKI
APPROVED BY:

60% DESIGN
NOT FOR CONSTRUCTION

This document is an interim document and not suitable for construction. As an interim document, it may contain data that is potentially inaccurate or incomplete and is not to be relied upon without the express written consent of the preparer.

Stantec

TETRA TECH

LYNN WATER & SEWER COMMISSION

LYNN WATER AND SEWER COMMISSION

PHASE 3 WEST LYNN SEWER SEPARATION

TRAFFIC GENERAL
TYPICAL DETAILS - I

SHEET
TG-03

195130174

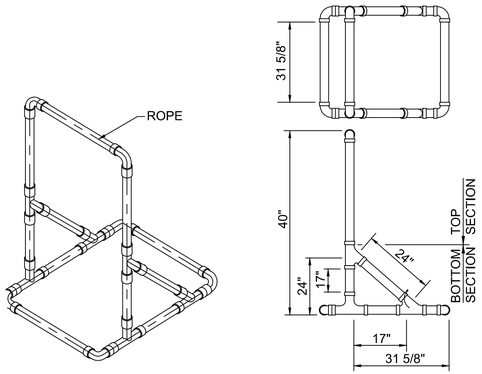

NOTES:

1. ALL DIMENSIONS ARE APPROXIMATE.
2. BOTTOM SECTION OF SUPPORT MAY BE FILLED WITH SAND FOR BALLAST.
3. SUPPORT SHALL BE LOOSELY THREADED WITH ROPE, KNOTTED AS REQUIRED.

TYPICAL 3" OR 4" PLASTIC SIGN / BARRICADE SUPPORT

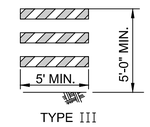

NOTES:

1. ALUMINUM BARRICADE FACE PANELS SHALL BE MOUNTED ON 3" OR 4" P.V.C. BARRICADE SUPPORT.
2. MARKINGS FOR BARRICADE FACE PANELS SHALL BE ALTERNATE ORANGE AND WHITE STRIPES SLOPING DOWNWARD IN THE DIRECTION TRAFFIC IS TO PASS. SIX (6") INCH WIDE STRIPES AT A 45° ANGLE SHALL BE USED.
3. THE ENTIRE AREA OF ORANGE AND WHITE STRIPES SHALL BE REFLECTIVE SHEETING - ENCAPSULATED LENS. BARRICADE FACE PANELS AS NOTED SHALL BE REFLECTORIZED ON BOTH SIDES. WHERE TRAFFIC PASSES ONLY IN ONE DIRECTION OF TRAVEL, ONLY THE SIDE FACING TRAFFIC SHALL BE REFLECTORIZED.
4. ALUMINUM BARRICADE FACE PANELS SHALL HAVE ROUNDED CORNERS.
5. THE ENGINEER RESERVES THE RIGHT TO REJECT ANY BARRICADE FACE PANEL WHICH THE ENGINEER DEEMS HAZARDOUS, AND NOT IN THE BEST INTEREST OF THE MOTORING PUBLIC, OR NOT SUITABLE FOR PURPOSE INTENDED.

TYPE III ALUMINUM BARRICADE FACE PANELS

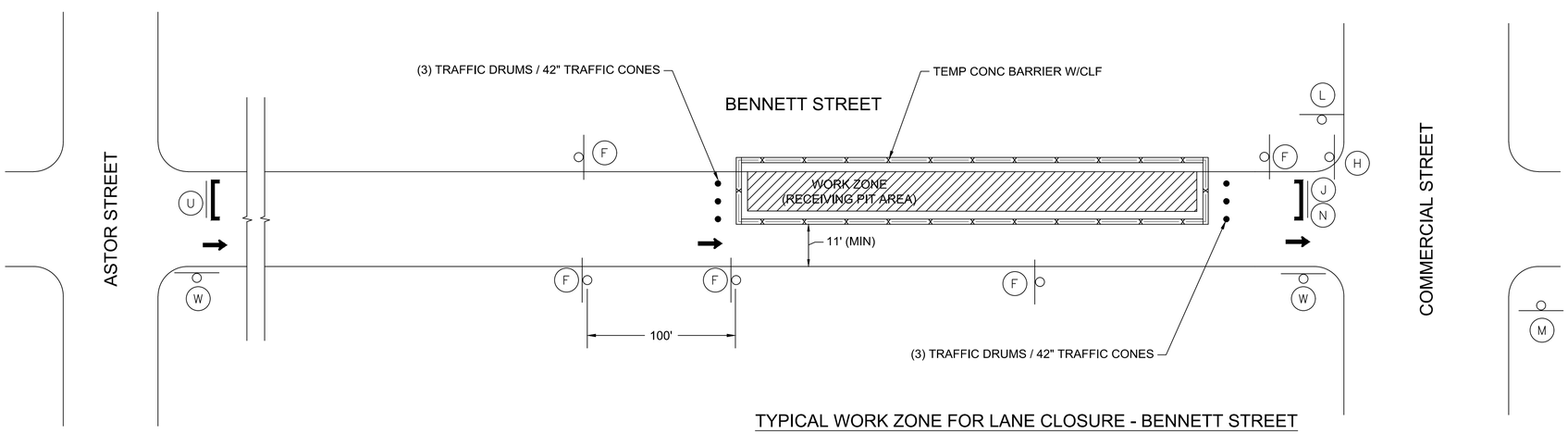

TYPICAL WORK ZONE FOR LANE CLOSURE - BENNETT STREET

SIGN LEGEND:

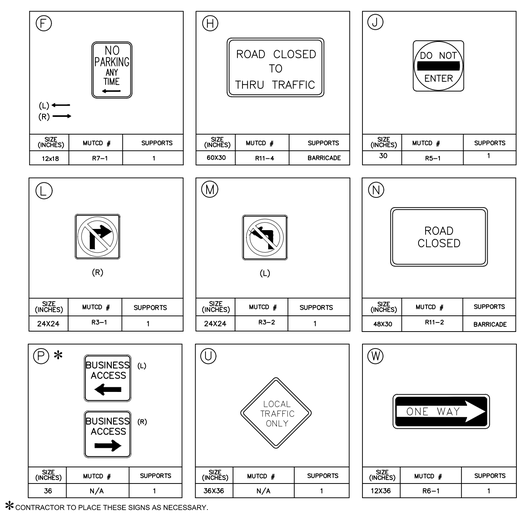

*CONTRACTOR TO PLACE THESE SIGNS AS NECESSARY.

REV	DATE	BY	DESCRIPTION

SCALE: NO SCALE

WARNING: 0 ½ 1 — IF THIS BAR DOES NOT MEASURE 1" THEN DRAWING IS NOT TO SCALE

DATE	JULY 31, 2019
DRAWN BY	D HUDSON
DESIGNED BY	D HUDSON
CHECKED BY	E MAKI
APPROVED BY	

60% DESIGN
NOT FOR CONSTRUCTION

This document is an interim document and not suitable for construction. As an interim document, it may contain data that is potentially inaccurate or incomplete and is not to be relied upon without the express written consent of the preparer.

Stantec

TETRA TECH

LYNN WATER & SEWER COMMISSION

LYNN WATER AND SEWER COMMISSION

PHASE 3 WEST LYNN SEWER SEPARATION

TRAFFIC GENERAL
TYPICAL DETAILS - II

SHEET TG-04

195130174

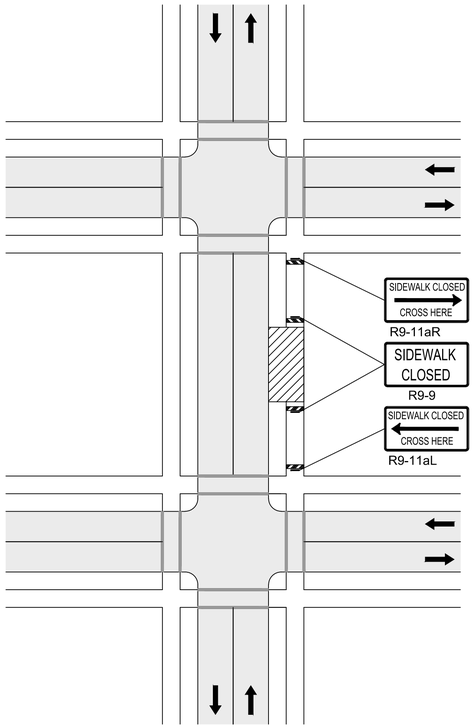

NOTE:
IF A MINIMUM WIDTH OF 48" OF SOLID SMOOTH UNOBSTRUCTED SURFACE REMAINS ALONG THE WORK AREA THEN THE DETAIL CAN BE DISREGARDED. DELINEATION OF THE WORK AREA WILL STILL BE REQUIRED. All PEDESTRIAN DETOUR ROUTES SHALL BE ADA/MAAB COMPLIANT IN THEIR ENTIRETY. PEDESTRIANS SHALL BE PROTECTED FROM ENTERING INTO THE ROADWAY AT ALL TIMES.

SIDEWALK CLOSED WITHOUT DETOUR

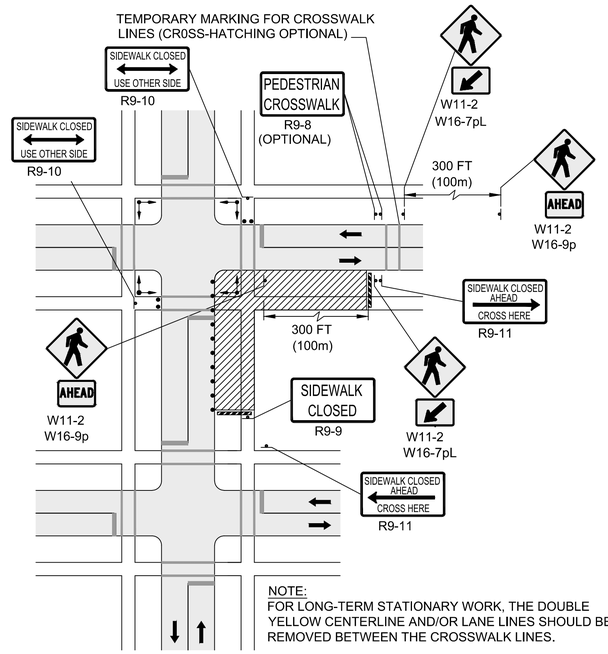

NOTE:
FOR LONG-TERM STATIONARY WORK, THE DOUBLE YELLOW CENTERLINE AND/OR LANE LINES SHOULD BE REMOVED BETWEEN THE CROSSWALK LINES.

PEDESTRIAN DETOUR

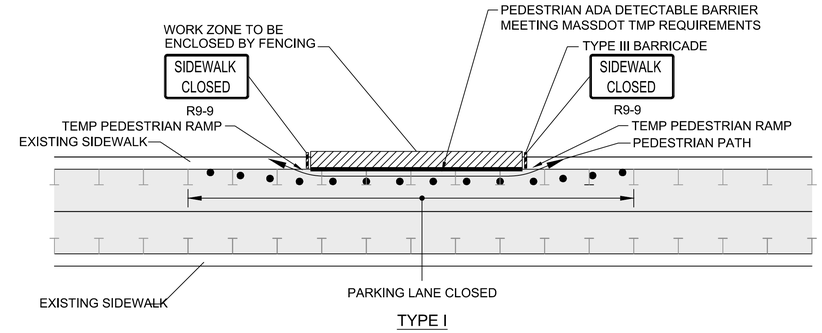

TYPE I

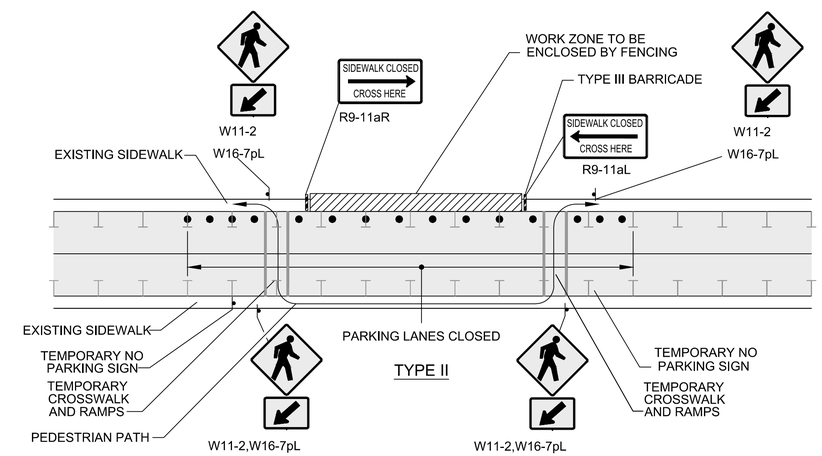

PEDESTRIAN BYPASS NOTES:

1. ADDITIONAL ADVANCE WARNING SIGNS / DEVICES MAY BE NECESSARY.
2. CONTROLS ONLY FOR PEDESTRIAN TRAFFIC ARE SHOWN. VEHICULAR TRAFFIC SHOULD BE HANDLED AS SHOWN ELSEWHERE.
3. STREET LIGHTING SHOULD BE CONSIDERED WHEN LOCATING CONTROL DEVICES.
4. IF THE WORK ZONE DOES NOT PERMIT PEDESTRIANS TO TRAVEL ADJACENT TO IT AS SHOWN IN PEDESTRIAN BYPASS TYPE I, TEMPORARY CROSSWALKS WITH APPROPRIATE SIGNS SHOULD BE INSTALLED TO CROSS PEDESTRIANS TO THE OPPOSITE SIDE OF THE STREET AS SHOWN IN PEDESTRIAN BYPASS TYPE II, AND AS DIRECTED BY THE ENGINEER. TEMPORARY CURB RAMPS WILL BE REQUIRED AT ALL TEMPORARY CROSSWALK LOCATIONS.
5. BYPASS IS TO BE USED IN CONJUNCTION WITH THE PROPOSED LANE CLOSURE DETAILS AND DURING CONSTRUCTION STAGING, AS DIRECTED BY THE ENGINEER.
6. THE TEMPORARY SIDEWALK SHOULD BE A MINIMUM OF 4 FEET WIDE. IF THIS WALKWAY EXCEEDS 200 FEET THEN A 5 FOOT X 5 FOOT PASSING ZONE. (FOR SHORT TERM SETUPS < 10 HOURS, THIS CONDITION MAY BE WAIVED. A NOTE WOULD NEED TO BE INCLUDED IN THE TTCP THAT STATES HOW THE CONTRACTOR SHOULD ADDRESS THIS ISSUE.)

PEDESTRIAN BYPASS

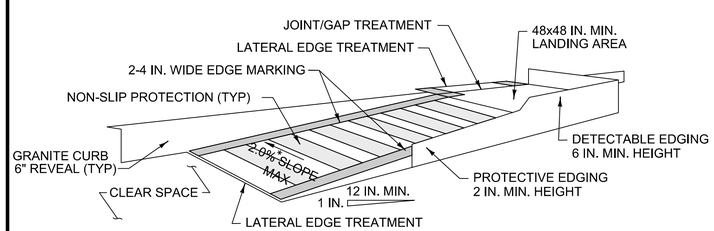

PARALLEL TO CURB

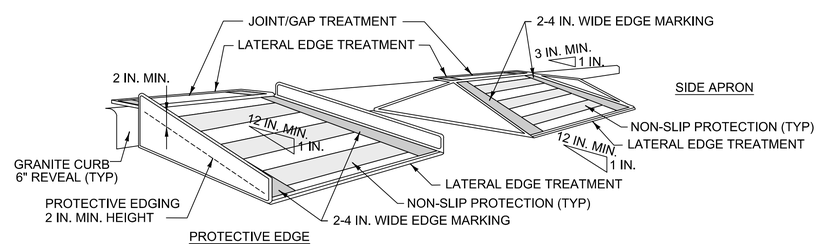

PERPENDICULAR TO CURB

CURB RAMP NOTES:

1. CURB RAMPS SHALL BE 60 IN. MINIMUM WIDTH WITH A FIRM, STABLE AND NON-SLIP SURFACE.
2. PROTECTIVE EDGING WITH A 2 IN. MINIMUM HEIGHT SHALL BE INSTALLED WHEN THE CURB RAMP OR LANDING PLATFORM HAS A VERTICAL DROP OF 6 IN. OR GREATER OR HAS A SIDE APRON SLOPE STEEPER THAN 1:3 (33%). PROTECTIVE EDGING SHOULD BE CONSIDERED WHEN THE CURB RAMPS OR LANDING PLATFORMS HAVE A VERTICAL DROP OF 3 IN. OR MORE.
3. DETECTABLE EDGING WITH 6 IN. MINIMUM HEIGHT AND CONTRASTING COLOR SHALL BE INSTALLED ON ALL CURB RAMP LANDINGS WHERE THE WALKWAY CHANGES DIRECTION (TURNS).
4. CURB RAMPS AND LANDINGS SHOULD HAVE A 1:50 (2%) MAX CROSS-SLOPE.
5. CLEAR SPACE OF 48x48 IN. MINIMUM SHALL BE PROVIDED ABOVE AND BELOW THE CURB RAMP.
6. THE CURB RAMP WALKWAY EDGE SHALL BE MARKED WITH A CONTRASTING COLOR 2 TO 4 IN. WIDE MARKING. THE MARKING IS OPTIONAL WHERE COLOR CONTRASTING EDGING IS USED.
7. WATER FLOW IN THE GUTTER SYSTEM SHALL HAVE MINIMAL RESTRICTION.
8. LATERAL JOINTS OR GAPS BETWEEN SURFACES SHALL BE LESS THAN 0.5 IN. WIDTH.
9. CHANGES BETWEEN SURFACE HEIGHTS SHOULD NOT EXCEED 0.5 IN. LATERAL EDGES SHOULD BE VERTICAL UP TO 0.25 IN. HIGH, AND BEVELED AT 1:2 BETWEEN 0.25 IN. AND 0.5 IN. HEIGHT.

TEMPORARY CURB RAMP

REV	DATE	BY	DESCRIPTION

SCALE: NO SCALE

WARNING: 0 ½ 1 — IF THIS BAR DOES NOT MEASURE 1" THEN DRAWING IS NOT TO SCALE

DATE	JULY 31, 2019
DRAWN BY	D HUDSON
DESIGNED BY	D HUDSON
CHECKED BY	E MAKI
APPROVED BY	

60% DESIGN
NOT FOR CONSTRUCTION

This document is an interim document and not suitable for construction. As an interim document, it may contain data that is potentially inaccurate or incomplete and is not to be relied upon without the express written consent of the preparer.

Stantec

TETRA TECH

LYNN WATER & SEWER COMMISSION

LYNN WATER AND SEWER COMMISSION

PHASE 3 WEST LYNN SEWER SEPARATION

TRAFFIC GENERAL
TYPICAL DETAILS - III

SHEET
TG-05

195130174

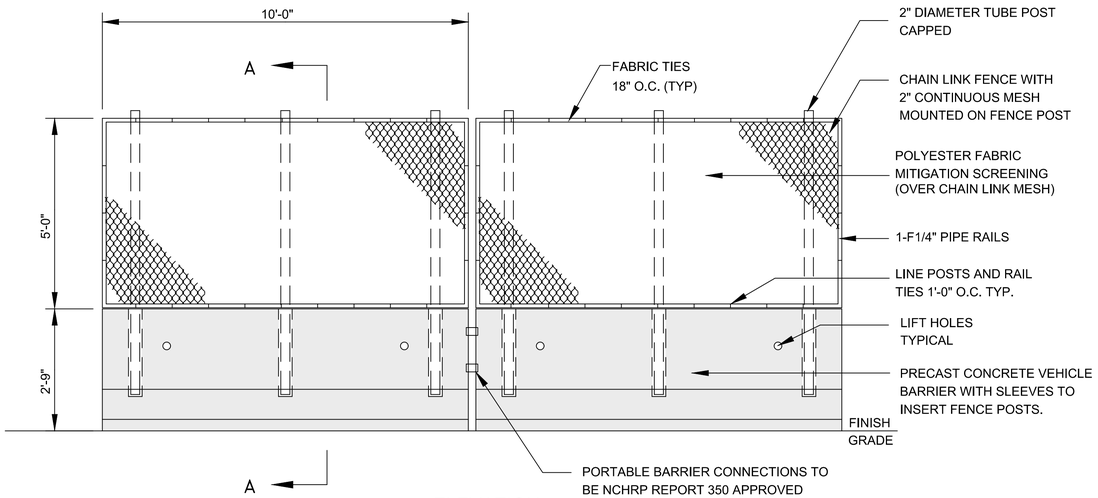

ELEVATION

APPLICATION GUIDELINES FOR TEMPORARY CONSTRUCTION BARRICADE

1. ALL CONSTRUCTION ZONES WHICH ARE IN PLACE LONGER THAN THE WORK DAY SHALL BE SEPARATED FROM PUBLIC ACCESS BY TEMPORARY PORTABLE CONSTRUCTION BARRICADE. BARRIERS SHALL BE INTERRUPTED ONLY BY GATES OR REMOVABLE BARRIERS USED TO ALLOW INGRESS AND EGRESS OF CONSTRUCTION PERSONAL, EQUIPMENT AND MATERIALS.
2. WHEN CONSTRUCTION BARRICADES WOULD JEOPARDIZE TRAFFIC SAFETY BY OBSTRUCTING VIEWS, ALTERNATE SITE ENCLOSURE PRACTICES SHALL BE USED WITH THE ACCEPTANCE OF THE ENGINEER.
3. CONSTRUCTION BARRICADE SHALL BE USED :

a. TO ENCLOSE CONSTRUCTION SITES AND LAYDOWN AREAS WHERE TEMPORARY ROADWAY PROTECTION (CONCRETE BARRIER) IS REQUIRED.
b. TO SEPARATE ALL PEDESTRIAN ROUTES FROM FROM CONSTRUCTION ZONES.
c. IN LIEU OF CONSTRUCTION FENCE WHEN PERIMETER ENCLOSURE MUST BE FREQUENTLY RELOCATED ELSEWHERE AS NEEDED IF SPECIAL CONDITIONS EXIST.

4. TYPICAL CONSTRUCTION BARRICADE SHALL HAVE 9 GAUGE SIZE STEEL WIRES INTERWOVEN INTO TWO INCH CHAIN LINK MESH.
5. THESE DRAWINGS SHOW DESIGN INTENT ONLY. THE CONTRACTOR SHALL SUBMIT WORKING DRAWINGS AND TECHNICAL LITERATURE FOR REVIEW BY THE ENGINEER. SAID WORKING DRAWINGS AND SPECIFICATIONS SHALL DESCRIBE ALL CONDITIONS WHICH WILL BE ENCOUNTERED WITHIN THE CONTRACT AREA AND SHALL BE IN CONFORMANCE WITH ALL APPLICABLE CODES. UPON REVIEW AND ACCEPTANCE BY THE ENGINEER, SUBMIT SAMPLES OF ALL MATERIALS AND COMPONENTS FOR REVIEW BY THE ENGINEER.
6. BACK SIDE OF FENCES AND BARRICADES SHALL FACE CONSTRUCTION SITE. FRONT SIDE SHALL FACE PUBLIC AREA.
7. FASTENER SIDE OF LINE POST TIES SHALL BE ON BACK SIDE OF FENCES AND BARRICADES.

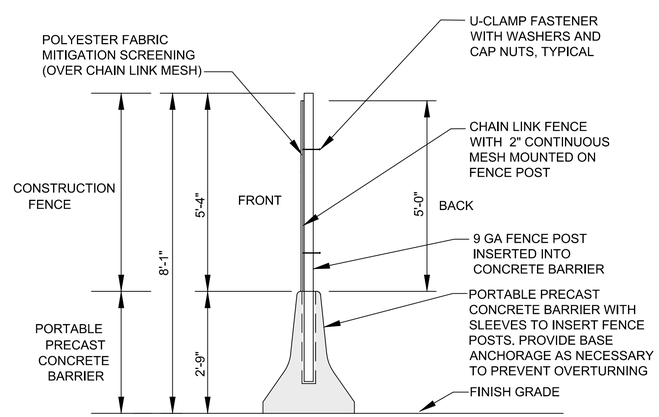

SECTION A-A

TEMPORARY CONSTRUCTION BARRICADE ON PRECAST CONCRETE BARRIER

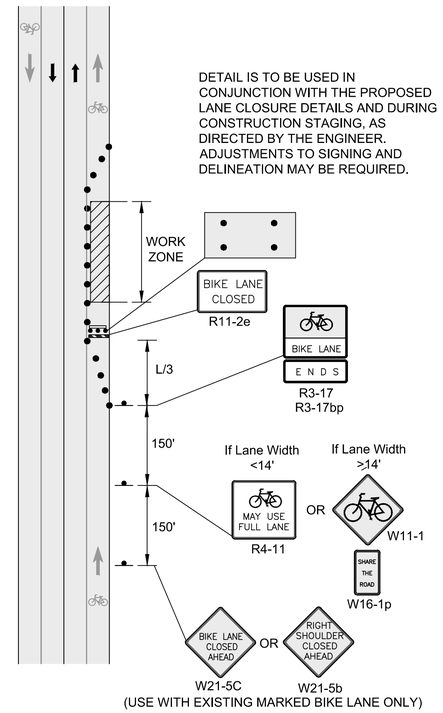

BICYCLE LANE CLOSURE WITHOUT DETOUR

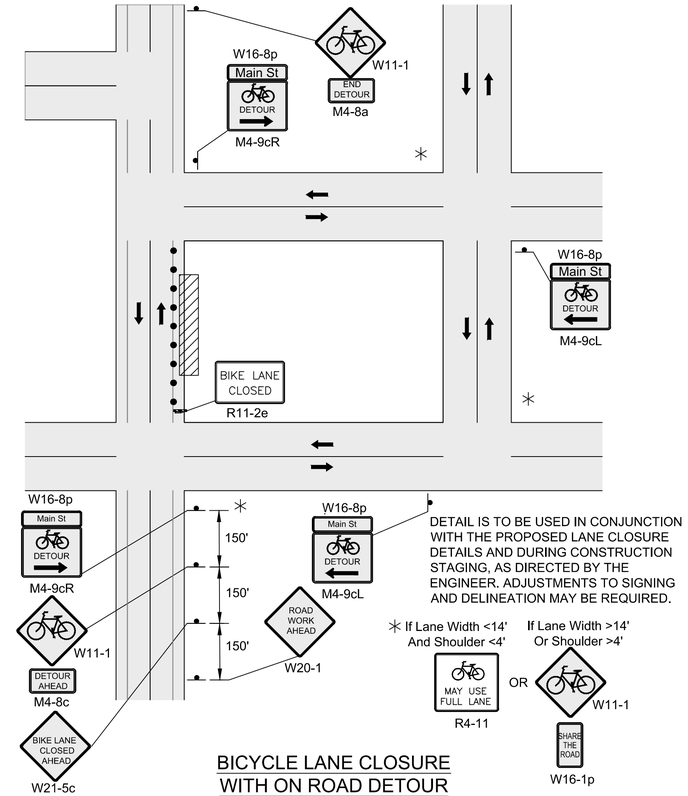

BICYCLE LANE CLOSURE
WITH ON ROAD DETOUR

REV	DATE	BY	DESCRIPTION

SCALE: NO SCALE

WARNING: 0 ½ 1 — IF THIS BAR DOES NOT MEASURE 1" THEN DRAWING IS NOT TO SCALE

DATE	JULY 31, 2019
DRAWN BY	D HUDSON
DESIGNED BY	D HUDSON
CHECKED BY	E MAKI
APPROVED BY	

60% DESIGN
NOT FOR CONSTRUCTION

This document is an interim document and not suitable for construction. As an interim document, it may contain data that is potentially inaccurate or incomplete and is not to be relied upon without the express written consent of the preparer.

Stantec

TETRA TECH

LYNN WATER & SEWER COMMISSION

LYNN WATER AND SEWER COMMISSION

PHASE 3 WEST LYNN SEWER SEPARATION

TRAFFIC GENERAL
TYPICAL DETAILS - IV

SHEET
TG-06

195130174