VALERO
REFINING COMPANY-CALIFORNIA

Flare Minimization Plan
Regulation 12-12
Benicia Refinery

Public Information

Revision 11.1

Revision date: March 9, 2017

Table of Contents

1. Executive Summary 1-1
1.1 BAAQMD Regulation 12, Rule 12 Overview 1-1
1.2 NSPS Ja Overview 1-4
1.3 Current FMP Progress 1-5
2. Technical Data 2-1
2.1 General Refinery and Flare System Background Information 2-1
2.1.1 Refining/Refinery Overview 2-1
2.1.2 Refinery Fuel Gas Production 2-4
2.1.3 Refinery Flare Gas Recovery and Flare Systems 2-5
2.2 Current Reasons for Flaring 2-8
2.2.1 Planned and Unplanned Maintenance Activities 2-9
2.2.2 Fuel Gas Quantity and Quality 2-12
2.2.3 Equipment Failure and Malfunction 2-13
2.3 Current Flare Minimization Procedures 2-15
2.3.1 Planning for Maintenance Activities that May Result in Flaring 2-17
2.3.2 Flaring Event Review Program 2-18
2.3.3 Flare Minimization Through Reliability Improvement 2-18
2.4 Refinery Flare Gas Recovery System including South and North Flares 2-20
2.4.1 Process Unit Liquid KO Drums and Flare Gas Header 2-23
2.4.2 Flare Gas Compressors, C-2101 A/B 2-24
2.4.3 Fuel Gas Unit 2-28
2.4.4 Flare Water Seal Drums, D-2105 and D-2112 2-32
2.4.5 Flares, South and North 2-33
2.5 Acid Gas Flare System 2-34
2.5.1 SGU Liquid KO Drum, D-2107 and Acid Gas Flare Line 2-34
2.5.2 Acid Gas Flare Water Seal Drum, D-2106 & Liquid Accumulator Drum, D-2108 2-35
2.5.3 Acid Gas Flare 2-35
2.6 Monitoring Equipment 2-36
2.6.1 Flare Volumetric Flow Rate Monitoring 2-36
2.6.2 Pilot and Purge Gas Flowrate 2-37

2.6.3 Flare Video Monitoring 2-38
2.6.4 Flare Seal Drum Monitoring 2-38
2.6.5 Flare Gas Composition Monitoring 2-39
2.6.6 Flare Gas Compressor Monitoring 2-40
3. Flaring Reductions Previously Realized 3-1
4. Planned Flaring Reductions 4-1
4.1 Management Practices that Result in Flare Minimization 4-1
4.2 Specific Improvements that Result in Flare Minimization 4-2
5. Prevention Measures 5-1
5.1 Prevention Measures – Maintenance Activities 5-1
5.1.1 Background Information Regarding Maintenance Activities 5-2
5.1.2 Flaring During Major Maintenance Activities 5-3
5.1.3 Measures Considered to Minimize or Eliminate Maintenance Flaring 5-8
5.1.4 Benicia Refinery Maintenance Planning and Preparation 5-19
5.2 Prevention Measures – Fuel Gas Quantity and Quality 5-23
5.2.1 Existing Flare Gas Recovery Capacity at Benicia Refinery 5-23
5.2.2 Evaluation of Options for Additional Flare Gas Recovery, Scrubbing and Use 5-25
5.3 Prevention Measures – Equipment Failure and Malfunctions 5-32
5.3.1 Benicia Refinery Preventative Maintenance 5-33
5.3.2 Recurrent Failure 5-33
5.4 Prevention Measures – Use of Production Cuts to Minimize Flaring 5-34
Appendix A 1
Appendix B 1
Appendix C 1

Tables

Table 2-1 – Flare Gas Compressor Trip Set Points 2-27
Table 2-2 – Flare Water Seals 2-33
Table 2-3 – Flare Seal Drum Level Monitors 2-38
Table 2-4 – Water Seal Monitors 2-39
Table 3-1 – Flaring Reductions Previously Realized 3-1
Table 4-1 – Planned Flaring Reductions 4-3
Table 5-1 - Flaring During Major Maintenance Activities – 5 Year Lookback 5-4
Table 5-2 – Evaluation of Prevention Measures to Minimize or Eliminate Maintenance Flaring 5-9
Table 5-3 – Summary of Benicia Refinery Flare Gas Recovery System Capacity 5-24
Table 5-4 – Summary of Estimated Cost for Flare Gas Recovery System Expansion 5-29
Table 5-5 – Summary of Estimated Cost Effectiveness for Flare Gas Recovery System Expansion Based on NMHC Emissions (2006 cost basis, actual cost in subsequent years is always greater and not necessary to recalculate) 5-31
Table 5-6 – Summary of Estimated Cost Effectiveness for Flare Gas Recovery System Expansion Based on Emissions of SO_2, NO_X, CO, and PM10 5-32

Figures

Figure 1 – Flare Vent Gas Volume 1-6
Figure 2 – Flare Vent Emissions 1-8
Figure 3 – Flare Vent Gas Volume – RCA Event vs. Small Event Comparison 1-10
Figure 4 – Benicia Refinery Simplified Operations Flow Diagram 2-3
Figure 5 – Flare Minimization Flowchart 2-16
Figure 6 – Flare Gas Recovery System 2-23
Figure 7 – Fuel Gas Unit 2-29
Figure 8 – Flare Minimization Flowchart for Maintenance 5-22
Figure 9 – Typical Fuel Gas Recovery System 5-26
Figure 10 – Flare Gas Recovery System 5-28

Certification

I, Iren Suhami, certify that based on the information available to me, the information provided herein is accurate, true and complete.

Iren Suhami

March 13, 2017

Iren Suhami
Acting Manager – Environmental Engineering
Valero Benicia Refinery
VALERO REFINING COMPANY – CALIFORNIA

Date

1. Executive Summary

1.1 BAAQMD Regulation 12, Rule 12 Overview

On July, 20, 2005, the Bay Area Air Quality Management District's (BAAQMD) Board of Directors adopted Regulation 12-12. The BAAQMD's stated objectives for the rule were and are to minimize the frequency and magnitude of flaring events at petroleum refineries, and therefore reduce emissions (Regulation 12-12-101). However, despite these objectives, the BAAQMD made clear that nothing in the rule should be construed to compromise refinery operations and practices with regard to safety (Ibid.).

It is worth stressing that with regard to safety the BAAQMD recognized that because flares are first and foremost safety devices that must be available at all times for use in various situations to prevent accident, hazard, or release of refinery gas directly to the atmosphere, the formulation of a rule that will minimize the frequency and magnitude of flaring events at petroleum refineries, and therefore reduce emissions, must provide refineries with flexibility to address their unique flare systems without compromising the safety of workers and the public or the refineries.

To achieve the BAAQMD's objectives of minimizing the frequency and magnitude of flaring events, the rule prohibits flaring except for emergencies and as necessary to prevent an accident, hazard, or release of vent gas directly to the atmosphere, unless it is consistent with an approved Flare Minimization Plan (FMP) and all commitments due under that plan have been met (Regulation 12-12-301).

The rule requires that by August 1, 2006, the owner or operator of a petroleum refinery with one or more flares subject to this rule shall submit a FMP as required by Regulation 12-12-401 (Regulation 12-12-402). Regulation 12-12-401 indicates that the elements of an FMP[1] include:

1. A description of and technical information for the refinery flare system and the upstream equipment and processes that send gas to the flare, including all associated monitoring and control equipment;
2. A description of the equipment processes and procedures previously installed or implemented by the owner or operator within the last five years to reduce the flaring;
3. A description of any equipment, process or procedure to reduce flaring that is planned, but not yet installed or implemented and the schedule for completion; and

[1]The BAAQMD has emphasized that an FMP is not intended to serve as a permit for a flare or to be included as part of the refinery permit, and therefore, the plan is not subject to provisions of the Health and Safety Code or BAAQMD rules related to permits.

4. A description and evaluation of prevention measures, including a schedule for the implementation of all feasible prevention measures to address the following:
   - flaring during planned major maintenance activities including startup, shutdown, and turnaround;
   - flaring that may occur due to issues of fuel gas quantity or quality; and
   - flaring caused by the recurrent breakdown of equipment.
5. Any other information requested by the Air Pollution Control Officer as necessary to enable determination of compliance with applicable provisions of this rule.

This FMP for the Valero Refining Company – California; Benicia Refinery (Benicia Refinery) has been prepared with the BAAQMD's objectives in mind: to minimize the frequency and magnitude of flaring events at the refinery without compromising refinery operations and practices with regard to safety, and to comply with the Regulation 12-12-401 FMP requirements. Additionally, to comply with Regulation 12-12-301, which as noted above prohibits non-emergency and non-safety-related flaring unless it is consistent with an approved FMP, the FMP covers flaring associated with the following broad categories of events:

- maintenance activities including process unit startup, shutdown, and turnaround events;
- fuel gas quantity and quality issues such as a fuel gas imbalance or out of range fuel gas heating value (Btu);
- equipment failure and malfunction including process upsets;
- loss of a major process unit compressor;
- equipment overpressure or other cause for relieving safety valves;
- leaking or malfunctioning safety valves;
- operator error;
- emergency[2] conditions beyond the reasonable control of the Benicia Refinery or its operators caused by sudden, infrequent, and not reasonably preventable equipment failure, natural disaster, acts of war or terrorism, acts of God, external power curtailment, loss of utilities (e.g., power, cooling, steam, and instrument air), or fire; and

[2] Not subject to the Regulation 12-12-301 standard, but listed since the FMP addresses these types of flaring events.

- safety – to prevent an accident, hazard, or release of vent gas directly to the atmosphere[3].

The original FMP specifically provided the background information required by the regulation regarding the Benicia Refinery, the Flare Gas Recovery System, and the associated flares. Specifically, the FMP includes measures that the Benicia Refinery has implemented to minimize flaring, historical rates of flare gas recovery and flaring events, flaring that may continue to occur for safety and environmental reasons, and the refinery's ongoing flare minimization procedures. It is worth noting and emphasizing that over the past 40 years the Benicia Refinery has made continuous improvement with respect to flare minimization with dramatic improvement in recent years.

Additionally, Regulation 12-12-404.1 requires that no more than 12 months following approval of the original FMP and annually thereafter, the owner or operator of a flare subject to this rule shall review the FMP and revise the plan to incorporate any new prevention measures identified as a result of the analyses prescribed in Sections 12-12-401.4 and 12-12-406. The updates must be approved and signed by a Responsible Manager. This document is the annual update designed to meet the requirements of Regulation 12-12-404.1 and to that end, the changes to the FMP are primarily in Sections 1 and 3. To ensure consistency in future years, the FMP Updates are due no later than October 1 each year. The FMP Update due on October 1, 2009 addressed flaring activity during the 13-month period from June 1, 2008 through June 30, 2009. Annually thereafter, all FMP Updates will cover the 12-month period from July 1 through June 30 ("FMP Year").

At the Benicia Refinery, flare minimization procedures have been implemented through a combination of procedural approaches and equipment upgrades targeted at minimizing the flow of gases to the refinery's Flare Gas Header, and maximizing the recovery of gases from that system for reuse. Key aspects of this approach include the development of an effective maintenance program to reduce unplanned flaring, monitoring of flows in the Flare Gas Header, a program to identify the sources of base loads if they start to rise, and operational planning to minimize or eliminate flaring during planned or anticipated maintenance events. A final important component is the refinery's program to evaluate the cause of significant flaring events that do occur, with the lessons learned from the causal analysis incorporated as appropriate into refinery operations, planning, and/or maintenance procedures.

Using this causal analysis approach for over a decade has allowed the refinery to significantly minimize the frequency and magnitude of flaring events. Flare volume has been reduced by more than 50 percent post 2005 compared to pre 2005.This FMP and subsequent updates will become an integral component of the Benicia Refinery's continuing program to sustain and improve upon the exceptional results already achieved.

---

[3] Not subject to the Regulation 12-12-301 standard, but listed since the FMP addresses these types of flaring events.

Accordingly, this FMP for the Benicia Refinery meets Regulation 12-12 requirements and will serve as an important component of the Benicia Refinery's continued efforts to minimize the frequency and magnitude flaring. Pursuant to Regulation 12-12-403, the Benicia Refinery requests timely approval of this FMP by the BAAQMD.

Based on data from the past 3 years, "significant events" (i.e. reportable flare events under Regulation 12, Rule 12) account for 88 percent of the flaring volume. Accordingly, the causal analysis reports and the flare minimization efforts are appropriately focused on the activities where there is the greatest potential for reductions. Conducting causal analyses for flaring events below the event definition criteria is not reasonable or cost effective. These events are so small (either low flow, short duration) that it is not always possible to determine the root cause of such events.

Appendices B and C of this FMP contain refinery confidential information and are trade secrets and confidential business information (CBI) of Valero Refining Company – California (Valero) as defined by the California Public Records Act, Government Code Section 6254.7 et seq., and the Freedom of Information Act, 40 CFR Part 2 (40 CFR §2.105(a)(4)), 5 USC 552(b)(4), and 18 USC 1905. Because of the sensitive and competitive nature of the information, Valero requests that the BAAQMD afford the information CBI status and treatment indefinitely. The content of Appendices B and C in the public version of this FMP have been redacted. A complete copy of the FMP, including Appendices B and C, is included in the CBI version of the FMP provided to the BAAQMD.

1.2 NSPS Ja Overview

On September 12, 2012, the United States Environmental Protection Agency (USEPA) promulgated New Source Performance Standard (NSPS) Ja, Standards of Performance for Petroleum Refineries for Which Construction, Reconstruction, or Modification Commenced After May 14, 2007.

The North, South, and Acid Gas Flares at the Benicia Refinery are interconnected, have been modified after June 24, 2008 (40CFR60.100a(b)), and are subject to NSPS Ja. The Butane Flare at the Benicia Refinery has not been modified since June 24, 2008 and is not subject to NSPS Ja.

In accordance with 40CFR60.103a(f) and 60.107a(a)(2), hydrogen sulfide (H2S) continuous emission monitoring systems (CEMS) were installed on the North and South flares by November 11, 2015. An Alternate Monitoring Plan (AMP) for Acid Gas Flare H2S concentration in lieu of a CEMS was submitted to USEPA on August 6, 2013; approval is pending.

In accordance with 40CFR60.103a(g), the Benicia Refinery complies with BAAQMD Regulations 12-11 and 12-12 as an alternative to complying with 60.103a(a)-(e). Therefore, this FMP and corresponding causal analyses are written and submitted to BAAQMD to address the specific requirements of Regulation 12-12 rather than 60.103a(a)-(e). The flare records will be maintained and submitted per Regulation 12-12 requirements, and not as described in 60.108a(c)(6) and 60.108(d)(5). A copy of the

Benicia Refinery FMP was submitted to USEPA (refinerynsps@epa.gov) on September 25, 2014.

In accordance with 40CFR60.103a(h), the flares shall not burn fuel gas with an H2S content in excess of 162 ppmv in a 3-hr rolling period. The combustion of process upset gases (resulting from a start-up, shutdown, upset, or malfunction), relief valve leakage, or other emergency malfunctions is exempt from this limit.

In accordance with 40CFR60.107a(h), the Benicia Refinery complies with Regulations 12-11 and 12-12 as an alternative to complying with 60.107a(e) and (f). Although not required by NSPS Ja, total sulfur CEMS were installed on the North and South flares in November 2015. These CEMS are used for SO2 emissions reporting required by Regulation 12-11-502.3.3 and replace the automatic flare sampling. Changing from 3-hour H2S flare gas sampling pre-2016 to continuous, online total sulfur analysis post-2016 may cause a step change in the SO2 emissions reported for similar flaring events.

1.3 Current FMP Progress

1.3.1 Flare Vent Gas Volume Trends

Figure 1 presents annual average flare vent gas volume for North, South and Acid Gas Flares at the Benicia Refinery from 1995 to present. For the current FMP update, the vent gas volumes are based on an average for the first six months of the year. Data from 2004 to present are based on panametric flow meters which were installed in late 2003 as required by BAAQMD Regulation 12-11-501. The data prior to 2004 was collected from non-regulatory, operations flow meters. Additionally, the data prior to 2004 does not include Acid Gas Flare vent gas volumes which do not significantly contribute to overall refinery-wide flare volumes.

Figure 1 – Flare Vent Gas Volume

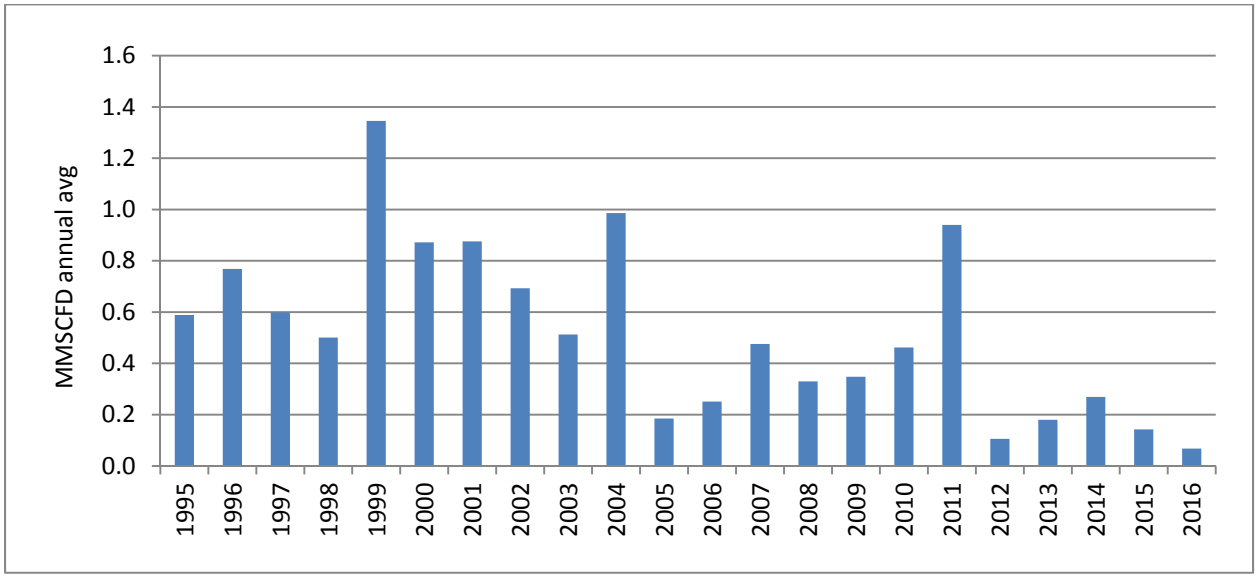

In 2011 Valero had greater flare volume than recent historical flaring due to a refinery-wide turnaround that began at the end of 2010 and continued into 2011. During this event, all refinery units were shutdown, maintained and restarted. During the 2005-2010 period of relatively low flaring, 2007 had the greatest flaring due to a significant maintenance event (mid-cycle turnaround) in which a significant number of refinery units were shutdown, maintained, and restarted. 2012 through current have low flare flows because the equipment is at its generally optimal status following a refinery-wide turnaround.

For comparison purposes, these data are best considered in discrete periods of time, depending on whether maintenance (turnaround) occurred during the year:

- The higher volume years correspond with comparable refinery-wide turnaround years, such as 1999, 2004, and 2011.
- Other years with significant maintenance activities, such as 2001, 2007, and 2010 also demonstrate a reduction in flaring during turnarounds.
- The years 2005, 2006, 2008, 2009, 2012, 2013, 2014, and 2015 represent operations without refinery-wide maintenance activities when flaring was significantly reduced over previous years.

A general trend of improvement is observed in each discrete period of time:

- The flaring rates in the 2004 and 2011 refinery-wide turnaround years are approximately 25 percent less than in the 1999 refinery-wide turnaround year.

- For significant maintenance activity years, flaring rates in 2007 and 2010 represent a reduction of more than 45 percent of the average flow compared to 2001.
- The flaring rates for 2005, 2006, 2008, 2009, 2012, 2013, 2014, and 2015 represent a reduction of more than 60 percent of the average flow in previous non-refinery-wide turnaround years. This reduction was achieved as a result of the mechanical and procedural improvements.

1.3.2 Annual Emissions Trends

Figure 2 presents annual average flare emissions for the North, South, and Acid Gas Flares at the Benicia Refinery. Since BAAQMD Regulation 12-11 went into effect in late 2003, flare emissions data are presented from 2004 to present. For the current year, the flare vent gas volume and emissions estimates are based on the average emissions for the first six months of the year.

As specified by BAAQMD Regulation 12-12-101, the purpose of BAAQMD's flare minimization standard is to reduce emissions from flares at petroleum refineries by minimizing the frequency and magnitude of flaring. Figure 1, which presents annual average flare vent gas volume, provides a direct correlation to the frequency and magnitude of flaring. The underlying premise is that a reduction in flare volume will lead to a reduction in flare emissions. As seen by a comparison of Figure 1 and 2, there is a very good correlation between flare volume and flare emissions for most years and most pollutants. For example, the vent gas volume in 2007 was about half the volume of 2004 and emissions in 2007 were about half of what they were in 2004.

Although reductions occur, as time progresses, the amount of reductions in years of equivalent operations will not be as significant. 2012-2015 flows following the 2011 turnaround trend the 2005-2007 reductions that followed the 2004 turnaround.

Figure 2 – Flare Vent Emissions

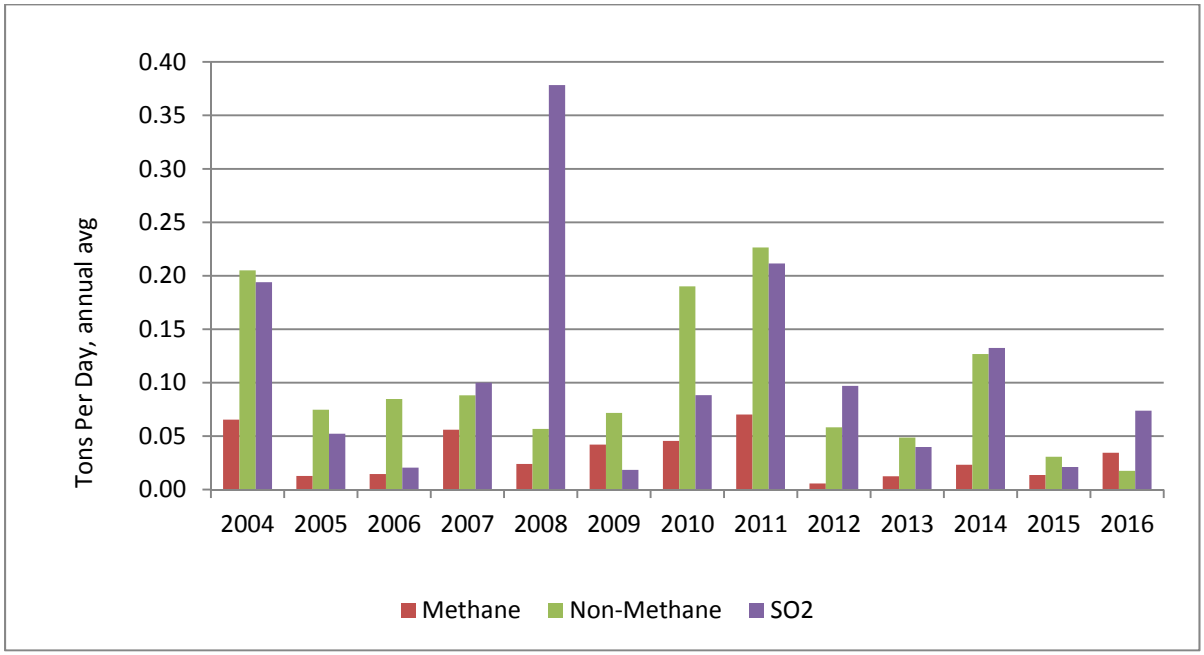

1.3.3 Flaring Events

The correlation between flare volume and flare emissions is not exact because the composition of flare gas is not always consistent. In 2008, a higher than normal flare gas composition of hydrogen sulfide resulted in relatively higher sulfur dioxide emissions even though the flare gas volume was relatively low compared to other years. The relatively higher hydrogen sulfide vent gas composition and corresponding higher sulfur dioxide emissions in 2008 were caused by a single flaring event associated with the emergency shutdown of the Fluid Catalytic Cracking Unit (FCCU) and subsequent restart of the unit from February 28 through March 6, 2008. The emergency shutdown was required to repair a leak on the bottom pumparound line at the FCCU fractionator tower (T-701).

As a result of this flaring event, Valero implemented two important prevention measures to minimize the likelihood of a similar flaring event in the future. Valero implemented procedures to incorporate vent gas hydrogen sulfide sampling results into flare minimization strategies as the sample results become available. This allows Valero to make quicker decisions with respect to flare minimization based hydrogen sulfide composition in additional to vent gas volume data which is available in real time. Additionally, Valero modified both shutdown and startup procedures to improve the recovery of gases with a low heating value, such as nitrogen. Flaring of low heating value gases was a contributing factor that increased flare volume during the February/March 2008 flaring event.

The refinery scheduled a major refinery–wide turnaround for January 1, 2011. However, the FCCU experienced an upset on December 1, 2010, the details of which are discussed in the RCA as well as this FMP. The refinery attempted to keep the FCCU operating, but the upset caused refinery-wide operational issues that led to the decision to shut down the refinery and begin the turnaround prior to the original schedule. The shutdown sequence was modified to accommodate the upset situation and could not proceed according to the original plan. It is likely that this modified shutdown process caused shutdown flaring to be different than the original process plan, but all actions were modified to ensure safety of the personnel, equipment, the environment and the community. The emissions from the December 2010 FCCU upset and subsequent refinery shutdown accounted for approximately 87% of the 2010 SO2 emissions and approximately 77% of the 2010 flow volume.

The refinery SRU experienced an upset on March 25, 2011. The refinery response to this event ensured the safety of the personnel, equipment, the environment and the community. The SRU trip required the use of the Acid Gas Flare as a safety device to ensure that all gases diverted to Acid Gas Flare were safely destroyed until the units could be safely restarted. The emissions from March 2011 (i.e., the SRU upset and a portion of turnaround) accounted for 98% of the SO2 emissions and similarly 14% of the flow volume. The majority of the flow at the AGF during 2011 was due to turnaround startup.

A review of the entire turnaround flaring period December 2010 – March 2011 (i.e., December 2010 FCCU upset and subsequent refinery shutdown and turnaround) accounted for 93% of the methane emissions, 72% of the SO2 emissions during the FMP review period (July 2010-June 2010) and similarly 91% of the 2010 flow volume. This accounts for a majority of the emissions for the year and is also comparable to the 2004 refinery-wide turnaround.

During the July 2015 – June 2016 FMP review period nine of the reportable flaring events were unplanned due to equipment malfunction/operator error and three of the reportable flaring events were due to planned maintenance.

Each of these flare events was investigated and prevention measures were identified and implemented. The results from the investigations were reported to BAAQMD in Causal Analysis reports. All flaring, when it occurred, was minimized and stopped as soon as practical. We continue to investigate flaring events and implement prevention measures to minimize or prevent re-occurrence. However, one emergency flaring event can significantly affect the annual totals. Ultimately flares are essential refinery safety equipment. They provide a means to ensure the safe and efficient combustion of gases that would otherwise be released to the environment.

Every causal analysis investigation results in improved flare minimization awareness. The awareness is reflected in the existing equipment, existing procedures and extends into the evaluation of options for additional capital equipment and modifications to operating procedures to further reduce the volume of gas flared. Careful planning of any activity with the potential for flaring is the most successful minimization approach that has been

implemented at the Benicia Refinery. Procedures for reporting and investigating all flaring provide a means to learn from unanticipated events.

Small flare events are those less than the RCA Events. Figure 3 below clearly shows that the small events (shown in green) are not where significant effort should be made to reduce flaring. Since 2004, small flare events only account for an average of 21% of the total flare vent gas vent volume, illustrating the effectiveness of Valero's flare minimization effort. The lessons learned from the RCA event investigations have been applied to the 'small event flaring' and the reader should refer to the prevention measures discussed in the FMP as a whole.

Figure 3 – Flare Vent Gas Volume – RCA Event vs. Small Event Comparison

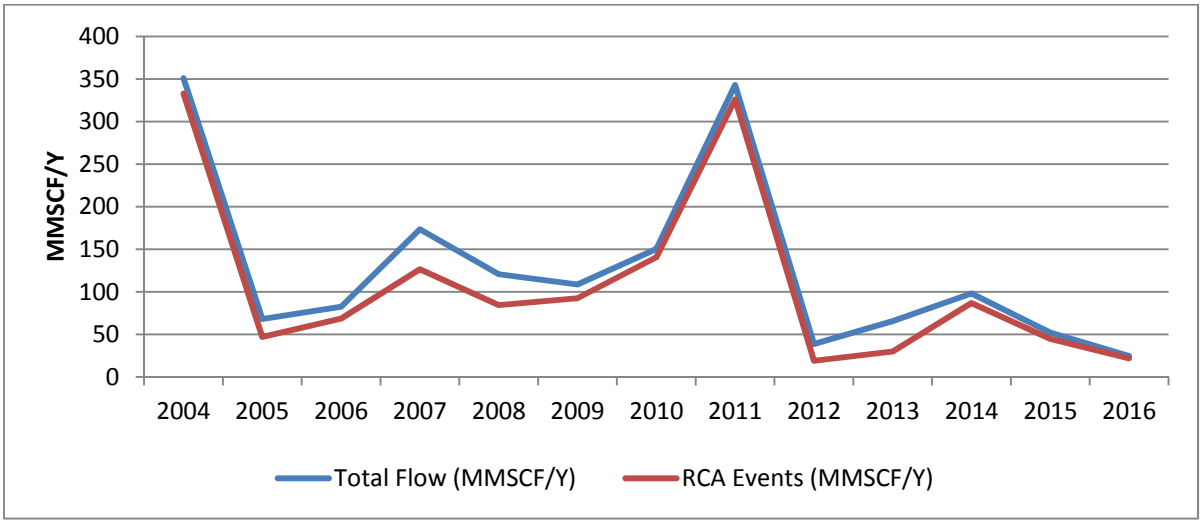

2. Technical Data

In accordance with Regulation 12-12-401.1, this section provides detailed descriptions and technical information for each applicable flare at the Benicia Refinery including upstream equipment and processes. During the drafting of this FMP, the Benicia Refinery met with the BAAQMD to review the adequacy of preliminary technical data. The technical data presented to the BAAQMD and additional data requested by the BAAQMD are presented in this section.

The Benicia Refinery operates the following "flare" systems:

- Refinery Flare Gas Recovery System including the South and North Flares
- Acid Gas Flare

This FMP does not address the Butane Flare, because this flare is exempt from the FMP requirements pursuant to Regulation 12-12-110.

2.1 General Refinery and Flare System Background Information

The processing of crude oil within a refinery is a complex operation that starts with the receipt of materials by ship or by pipeline and includes a variety of processing operations which ultimately produce a broad range of marketable fuel products. Within the extensive processing operations, equipment operates at a variety of pressures and temperatures and must safely manage materials that are flammable or harmful if released to the environment in an uncontrolled manner. Refinery flare gas recovery systems and their associated flares play a key role in this process. As noted by the BAAQMD, refinery flares are necessary for the safe disposal of gases generated during the refining process.

2.1.1 Refining/Refinery Overview

Refineries process crude oil by separating it into a range of hydrocarbon components or fractions, and then rearranging those components to produce products which satisfy a market demand. Petroleum fractions include heavy oils and residual materials used to make asphalt or petroleum coke, mid-range materials such as diesel (heating oil), jet fuel and gasoline, and lighter products such as butane, propane, and fuel gases.

Oil refineries are organized into groups of process units, with the general goal of maximizing the production of gasoline and diesel fuels. Each unit takes in a set of feed streams and produces a set of product streams with the composition changed (or upgraded) as one step toward production of an optimal mix of refined products. These separation and rearrangement processes also produce and/or consume materials that are gases at atmospheric pressure. As a final step in processing, many units provide treatment to conform to regulatory specifications such as reduced sulfur levels. Many of these processes operate at elevated temperatures and pressures, and a critical element of safe design is having their capability of releasing excess pressure via relieving devices to the flare gas header to manage excess materials in a controlled manner.

The Benicia Refinery is a modern petroleum refining facility, with a maximum permitted crude throughput rate of approximately 165,000 barrels per day (BPD) making it a moderate sized refinery compared with typical US facilities. The refinery produces a range of refinery products including propane, butane, gasoline, jet fuel, diesel fuel and fuel oil. The Valero Benicia Asphalt Plant (BAP) also operates on the site producing different grades of paving asphalts.

Major processing systems in the refinery include atmospheric crude distillation and vacuum crude distillation at the Pipestill (PS), hydrocracking (HCU), fluid catalytic cracking and distillation (FCCU), cat feed hydrotreating (CFHT), fluid coking and fractionation (CKR), light ends distillation (VLE and CLE), naphtha and distillate hydrotreaters (VNHF, LCNHF, HCNHF, JHF and DHF), catalytic naphtha reforming unit (NRU), motor gasoline reformulation (MRU), alkylation (ALK), dimate (DIM), butamer (BTR), and fuels storage and blending or Oil Movements (OMS). The facility also operates a hydrogen production plant (H2U), electrical power and steam production plant (COGEN), a sulfur gas unit (SGU) and tail gas unit (TGU) for recovery of sulfur, a wastewater treatment plant (WWT), shipping and marketing terminals, and utilities (UTIL) that support operations of the refinery complex. The refinery configuration is typical for an upgrading or fuels producing facility. A simplified operations flow diagram is provided in Figure 4.

As of January 2011, the Refinery installed and began operating a flue gas scrubber unit (FGS). This extensive abatement system reduces emissions of sulfur dioxide (SO2), nitrogen oxides (NOX), sulfur trioxides (SO3), greenhouse gases (GHG), and particulates to levels previously unachievable with the former equipment. The FGS treats SO2 emissions from the CKR and the FCCU which were previously unabated and vented to the Main Stack. The FGS project also replaced two CO furnaces at the PS with more efficient CO furnaces and exhausts through a new dedicated stack.

One unique feature of the refinery is that it was designed with the processing units highly integrated with each other. This approach maximizes energy efficiency and minimizes the storage of intermediate products; however, it also results in the refinery as a whole functioning essentially as one integrated unit. When one of the major, central processing units such as the PS is taken out of service, the entire refinery generally is also taken out of service at the same time.

Figure 4 – Benicia Refinery Simplified Operations Flow Diagram

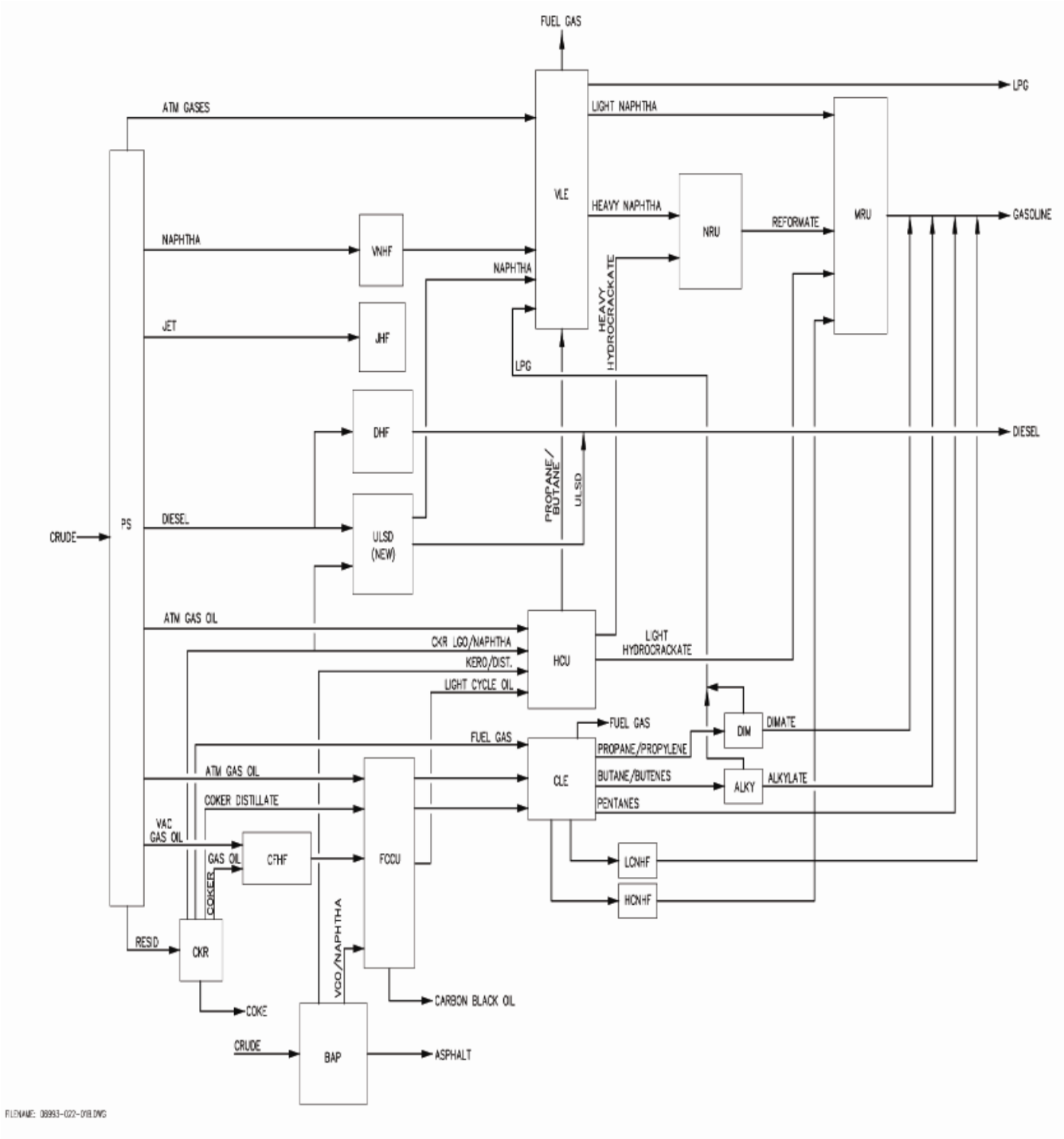

2.1.2 Refinery Fuel Gas Production

Refineries are designed and operated so that there will be a balance between the rates of fuel gas production and consumption. Under normal operations most gases produced by the refinery are routed directly to the refinery's fuel gas unit, allowing them to be used as a source of fuel in refinery furnaces, boilers, and other combustion devices. Typical refinery fuel gas units operate with a base loading of fuel gases generated in the refinery with additional natural gas supplied to the system as needed on pressure control to satisfy the refinery's total energy requirement. This provides a simple way to keep the system in balance, so long as the demand for fuel gas exceeds the amount of fuel gas produced (i.e., the so-called "fuel gas balance"). Some additional operational flexibility is typically maintained by having the ability to burn other fuels such as propane or butane, and to a limited extent having the capability to adjust the rate of fuel gas consumption at furnaces, boilers, and other combustion devices.

Flared gases can potentially be recovered for blending into the fuel gas unit if they are of proper quality for reuse - of light hydrocarbon content with sufficient fuel value, not primarily nitrogen or steam or other low Btu gases, and not excessively high in sulfur content. Reuse also depends on having sufficient treatment and consumption capacity available.

The Benicia Refinery maintains a single Fuel Gas Unit which must balance the demands of the fuel consumers within the refinery with the fuel gas produced by the refinery. The Fuel Gas Unit is also closely integrated with the refinery's hydrogen system, which like fuel gas is both produced and consumed within the refinery. Excess hydrogen can be returned to the Fuel Gas Unit within certain limits on quality and quantity.

The major users of refinery fuel gas include furnaces, boilers, four process gas turbines, and the COGEN plant. All of the users require the fuel gas to have a sufficient level of heating value (Btu content) to sustain proper combustion, particularly in burners that are specially designed to minimize the generation of NOX emission (e.g., low NOX burners). The sulfur content of the fuel gas must also be limited to minimize the formation of SO2 emissions when burned. Most of the refinery gases contain some amount of sulfur, so they are collected and treated to reduce sulfur levels (by amine absorption) with subsequent recovery of the sulfur at the SGU.

Different operations in the refinery produce fuel gases of different qualities. These are usually segregated to produce specific refinery products or intermediate streams. The atmospheric distillation (PS), NRU, and hydroprocessing units (CFHF, VNHF, LCNHF, HCNHF, DHF, JHF, ULSD and front end of HCU) produce gases that are primarily saturated hydrocarbon compounds which are separated into propane, butane, and gasoline range materials, and light ends which are routed to the Fuel Gas Unit. Heavy oil upgrading processes (primarily the CKR and FCCU) produce gases that contain significant amounts of unsaturated hydrocarbons (olefins) which are processed into fuel gas for internal use, chemical feedstocks (e.g., propylene and butylene), or are reacted further to produce gasoline range materials (e.g., dimate and alkylate).

Managing the fuel gas balance is a complex process, given the variety of gases produced and the stringent requirements for fuel gas quality by the consumers. The balance is further complicated by the fact that at the Benicia Refinery, both the producers and users are highly integrated and need to be brought into or out of operation in a coordinated manner. The process of starting up or shutting down major process units can itself take several days. The Fuel Gas Unit must balance loads constantly and quickly, and this is achieved by adjusting and maintaining the flow of makeup sources of fuel to the system including imported natural gas and by vaporizing liquid fuels (e.g., propane and butane). During periods of excess gas production or loss of major gas consumers, the excess gases are routed to the Flare Gas Recovery System and on to the flares for safe disposal until the balance can be restored.

The interrelationship between the Fuel Gas Unit, hydrogen system, fuel gas consumers, Flare Gas Recovery System and the flares is shown in simplified block flow diagrams in Figure 4, Figure 5 and Figure 6.

2.1.3 Refinery Flare Gas Recovery and Flare Systems

A header for collection of vapor streams is included as an essential element of nearly every refinery process unit. These headers are commonly referred to as flare gas headers because they are typically connected to a flare system. However, at many refineries, including the Benicia Refinery, most of the gases sent to a flare gas header are normally routed away from the flare(s) and recovered using a flare gas compressor(s) to send the gases to a fuel gas unit where they become fuel for the refinery's furnaces, boilers, and other combustion devices. At most refineries, the quantity of gas in the flare header needing recovery is relatively small in comparison to the total quantity of fuel gas produced at the refinery. However, it is in the economic interest of the refinery to recover even this small fraction of gas instead of sending it to a flare, because these recovered gases offset the need to purchase additional fuels such as natural gas.

The primary function of the flare gas header is safety. It provides the processing units with a controlled outlet for any excess vapor flow, nearly all of which is flammable, making it an essential safety feature of every refinery. Each flare gas header also has connections for equipment depressurization and purging for maintenance activities including startup, shutdown and turnaround. Pressure relief devices are also routed to the header system to handle process upsets, malfunctions, emergency and other safety-related releases. By routing any excess collected gases through a flare, the majority (greater than 98 percent) of hydrocarbons in the gases are destroyed and converted to combustion byproducts (primarily water and CO_2) before reaching the environment.

It is common practice for a flare gas header to incorporate hydrocarbon liquid knockout (KO) drums for separation and removal of entrained hydrocarbon liquids from the gas stream. This minimizes the possibility of hydrocarbon liquid being carried forward to a flare gas compressor or any of the flares associated with the header. Hydrocarbon liquid will result in severe mechanical damage to most types of compressors and cannot be safely and completely burned in a flare. The vapor stream from a unit KO drum is then

routed to the central refinery flare gas recovery system. The KO drum and header system may serve one process unit, or may serve a number of units in one integrated system.

A typical central refinery flare gas recovery system consists of a series of branch lines from various unit collection systems which join a main flare gas header. The main flare gas header is in turn connected to one or more flare gas compressors and to one or more flares. Normally, all vapor flow to the flare gas header is recovered by a flare gas compressor(s), which routes the gases to a fuel gas treatment scrubber(s) were contaminants such as sulfur are removed. Process gasses that are generated in excess of what can be handled by flare gas compressor(s), treatment scrubbers(s) and/or fuel gas consumers flow to a refinery flare where they are safely disposed of by combustion.

A water seal drum is typically located at the base of each flare to serve several functions. A water level is maintained in the seal drum to create a barrier which separates or “seals” the flare gas header from the flare. The flare gases must pass through this water in order to get to the flare. The depth of liquid maintained in the seal determines the pressure that the gas in the flare gas header must reach before it can “break” the seal and enter the flare. This creates a positive barrier between the header and the flare, ensuring that so long as the flare gas recovery system can keep pace with net gas production, there will be no flow from the flare gas header to the flare. It also guarantees that a positive pressure will be maintained at all points along the flare gas header, eliminating the possibility of air leaking into the system which could create an explosive atmosphere. Finally, the seal drum provides a positive seal to isolate the flare, which is itself an ignition source, from the header and the process units. Some flare gas recovery systems combine multiple flares with a range of water seal depths, effectively “staging” operation of the various flares.

Gases exit the flare via a flare tip which is designed to promote proper combustion over a wide range of gas flow rates. Steam is often used to improve mixing between air and hydrocarbon vapors at the flare tip, improving the efficiency of combustion and reducing smoking. A properly designed flare tip will also help to minimize noise levels during flaring events.

A small amount of fuel gas or natural gas continuously flows to each flare for two reasons. First, the pilots on the flare tip are kept burning at all times to ignite any gas flowing to the flare. Additionally, for some flare systems, a small purge gas flow is required to prevent air from flowing back into the flare stack.

Properly designed and operated flare systems destroy at least 98 percent of the hydrocarbon compounds that reach them, producing combustion products of CO2 and water. Other combustion products include sulfur oxides (SO2) if there are sulfur compounds in the flared gases and small quantities of nitrogen oxides (NOX).

The Benicia Refinery operates one main Flare Gas Recovery System with two flares (South and North) that fall under Regulation 12-12. The main refinery Flare Gas Recovery System collects sources from throughout the refinery and directs the gas to the Flare Gas Compressors. If there is excess flow, or if the gas quality makes it unsuitable for recovery,

the gases flow to the two main refinery flares – the South Flare and North Flare. Flow of excess gases from the Flare Gas Header preferentially goes to the South Flare first, then to the North Flare if necessary, as managed by staged water seals at each flare. Gases are routed to both flares only during major flaring events when high rates of gas flow occur.

The second flare system is the Acid Gas Flare that primarily receives a few relief vents from the SGU which are high in hydrogen sulfide and ammonia. The Acid Gas Flare is not used as a part of major maintenance procedures, and is typically only used for emergency situations and safety reasons. Occasional and limited use of the Acid Gas Flare is needed for startup and shutdown activities. This flare system only has infrequent flaring events.

Additionally, there is an emergency dedicated flare for refrigerated butane storage at the Benicia Refinery which is exempt from the Regulation 12-12-401 FMP requirements pursuant to Regulation 12-12-110.

When developing on-going flare minimization procedures and preparing this FMP, the Benicia Refinery has focused primarily on the Flare Gas Recovery System and the associated South and North Flares because the Acid Gas Flare is primarily used during emergency/upset situations, and during some startup and shutdown conditions.

Typical Base Load Conditions to the Flare Gas Header

For a variety of reasons, gases are routinely sent to the Flare Gas Header (but not necessarily to the flare) even when there are no maintenance activities, equipment failures or malfunctions, emergency conditions, and/or safety issues. This regular flow to the Flare Gas Header represents a base load condition that is typically between about 3 to 5 mmscfd. Examples of sources that can contribute on a regular or continuous basis to the Flare Gas Header include, but are not limited to:

- Sampling purges;
- Analyzer purges;
- Leakage of relief valves;
- Vents from seal pots used to control air emissions from pump seals;
- Low pressure tankage or vessels vented to Flare Gas Header for air pollution control and/or odor control purposes;
- Accumulation of small operational actions or maintenance procedures each of which results in production of flare gas;
- Low pressure equipment vented to Flare Gas Header (e.g., tower overhead systems);
- Routine reactor depressurization at the NRU as a part of the cyclic catalyst regeneration process; and
- Loading and unloading operations at the light ends loading racks.

2.2 Current Reasons for Flaring

While the results of the ongoing flare minimization procedures can be seen in this review of recent fuel gas flow and recovery data, there are still circumstances during which flaring remains a preferred or required option. Some causes of flaring cannot be eliminated, despite careful planning and system design to minimize the risk of occurring. These flaring events can be summarized as falling under, but not limited to, one or more of the following broad categories:

- maintenance activities including process unit startup, shutdown, and turnaround events;
- fuel gas quantity and quality issues such as a fuel gas imbalance or out of range fuel gas heating value (Btu);
- equipment failure and malfunction including process upsets;
- loss of a major process unit compressor;
- equipment overpressure or other cause for relieving safety valves;
- leaking or malfunctioning safety valves;
- operator error;
- emergency conditions beyond the reasonable control of the Benicia Refinery or its operators caused by sudden, infrequent, and not reasonably preventable equipment failure, natural disaster, acts of war or terrorism, acts of God, external power curtailment, loss of utilities (e.g., power, cooling, steam, and instrument air), or fire; and
- safety – to prevent an accident, hazard, or release of vent gas directly to the atmosphere.

This above listing of broad categories of flaring events reflects the varied nature and many potential causes of flaring. The broad categories are intended to cover the range of conceivable flaring events that could potentially occur at the Benicia Refinery as required by Regulation 12-12-301. Further specific examples of types of flaring events associated with maintenance activities, fuel gas quantity and quality, and equipment failure and malfunction are provided below to assist in the understanding of the Flare Gas Recovery System and its critical role in refinery operations. This listing is not intended to be fully comprehensive of all specific potential relief events, but generally demonstrates the types of events that could occur.

There are also sources of normal or base level flow to the refinery flare gas recovery system that, at times, may result in small volumes of flaring. These volumes are usually very low and/or short in duration and do not cause a flaring event. Some examples of these small base load sources are: leaking safety valves awaiting maintenance, instrument purges, and pressure control for refinery process equipment. In addition to this low level base load, there are other sources of normal flows to the refinery flare gas

recovery system (such as routine maintenance operations or process functions). This listing is not intended to be fully comprehensive of all normal or base level flows to the refinery flare gas recovery system, but generally demonstrates the types of activities that could occur.

2.2.1 Planned and Unplanned Maintenance Activities

Planned major maintenance activities including process unit startup, shutdown, and turnaround events are required for all of the refinery units, typically on at least a five to seven year turnaround cycle. Some units such as CKR, hydrofiners, HCU, ALKY, NRU, DIM, and portion of the PS are maintained outside of the major turnaround cycle. Planned minor maintenance activities including partial or total unit shutdown, slowdown, equipment isolation, and/or startup can occur at any time for any process unit. Unplanned process unit shut down for maintenance occurs on an infrequent basis, and although some units may withstand more events than others, any unit may be subject to unplanned events at some point in time.

Some examples of flaring associated with maintenance activities including process unit startup, shutdown, and turnaround events are provided below. It should be noted that flaring as a result of some of these maintenance activities may also be caused by fuel gas quantity and/or quality issues discussed in the next section.

Maintenance, startup or shutdown events where the volume of gases sent to the Flare Gas Header is too large to be completely recovered by the Flare Gas Compressors.

Maintenance, startup, or shutdown events where gases are routed to the flare system with a high nitrogen or hydrogen content and insufficient heating value for safe reuse in the Fuel Gas Unit.

Maintenance, startup or shutdown events where the fuel gas production is not in balance and sufficient users do not exist to take all of the recovered fuel gas.

Maintenance, startup or shutdown events where the hydrogen gas system may not be in balance and users do not exist to consume the available hydrogen.

Maintenance, startup or shutdown events where gases are produced that do not have a composition that is satisfactory for safe combustion in furnaces, boilers, gas turbines, and COGEN. Examples include gases with high hydrogen or nitrogen content, high steam content, low heating value (Btu content), and other incompatible constituents. If the heating value (Btu content) of flare gas is too low for recovery, the refinery must add fuel gas to the Flare Gas Header to ensure that there is sufficient heating value at the flares to ensure that any residual hydrocarbons are effectively combusted and the flare device is not extinguished.

During shutdown, vessels and other process equipment are depressurized and may be purged with nitrogen, hydrogen, and/or steam prior to opening in accordance with Regulation 8-10.

Startup or shutdown where one or more major fuel gas consuming or flare gas processing components (e.g., Flare Gas Compressors, COGEN, or a major furnace) cannot operate for a period of time.

Shutdown procedures where nitrogen or other gases may be needed to cool reactors.

Catalyst change-outs, which may include the need to strip hot catalyst with hydrogen or nitrogen, cool hot catalyst beds, and free the vessels of hydrocarbons before opening. Some catalysts that are pyrophoric in nature require even further special processing to maintain them in an inert oxygen free environment.

Conditioning of replacement catalyst with sulfur compounds prior to startup which may generate more fuel gas and/or hydrogen than can be managed in the Fuel Gas Unit and/or more hydrogen sulfide than can be treated by the Fuel Gas Unit.

Startup procedures where high pressure vessels must be slowly heated prior to “pressuring up” the vessel to prevent metal failure events (e.g., brittle fracture), which result in directing hot inert gases to the Flare Gas Recovery System.

Startup sequencing procedures where processing units (e.g., FCCU) may need to be restarted before the downstream gas processing units (e.g., CLE) can be brought into service.

Planned or unplanned maintenance activities for the COGEN unit. This unit has been a critical component of the flare minimization program. However, it can require major maintenance approximately every six months. It is also subject to the periodic outages associated with all major equipment. During these outages, the normal fuel gas balance in the refinery is dramatically impacted, and measures must be taken by the refinery to bring the system back into gas balance.

As noted above, refinery maintenance activities can create the need to divert nitrogen and/or hydrogen rich gases that are produced during maintenance away from the Flare Gas Compressor to a flare. This is a necessary result of the maintenance procedures which have been adopted to minimize the release of hydrocarbons to the atmosphere during equipment opening, and is in fact desirable, as any hydrocarbons in the gases are effectively combusted in the flare system. It should be noted that both nitrogen and hydrogen do not produce undesirable compounds upon combustion (excluding a very low potential quantity of NOX compounds). Some maintenance activities can also utilize steam, which can also impact the Flare Gas Recovery System. The need to divert gas to the flare is generally driven by the quantity and composition of the gases produced during maintenance, including startup, shutdown, and turnaround.

Fuel gas composition can have a significant impact on the equipment in the Flare Gas Recovery System, at the downstream Fuel Gas Unit and at the fuel gas consumers. A summary of these potential impacts are provided below:

High nitrogen or hydrogen content can impact furnaces, boilers, gas turbines, and COGEN by producing a low Btu gas that potentially could cause flameout and/or instable operation.

High nitrogen or hydrogen content can impact the capacity of flare gas compressors if they are designed for a significantly different molecular weight.

Hydrogen and other low molecular weight gases can impact flare gas compressor performance by reducing capacity, and may cause overheating or the inability of the compressor to operate.

Low Btu content (often caused by high levels of nitrogen or hydrogen) can also impact NOX controls, particularly at gas turbines which are very sensitive to fuel heating value.

Steam can impact compressors by raising the inlet temperature significantly, and potentially causing overheating or a high temperature shutdown.

Steam can impact knock out drums by condensing and filling them with liquid, as well as increase sour water production.

Each of these impacts is discussed further below.

2.2.1.1 High Nitrogen Content

High nitrogen content in the recovered gases presents a range of problems both at the users of recovered fuel gas and at the Flare Gas Compressors themselves.

High flows of nitrogen from equipment decommissioning can lead to a much higher than normal inert content in the mixed flare gas, greatly reducing its fuel value (measured as Btu/scf). When this low Btu flare gas is transferred to the fuel gas header, the lower fuel value can have the effect of reducing combustion efficiency, as the burners are designed to operate with fuels that have higher heat content per cubic foot. In extreme cases, the heating value of the gas can be reduced by dilution with nitrogen to the point of extinguishing the burner flame. This creates the potential for unburned fuel to accumulate in the furnace or boiler, leading to an explosion when it is re-ignited. NFPA 85 (Boiler and Combustion Systems Hazards Code) and NFPA 86 (Standards for Ovens and Furnaces) warn against this possibility.

Higher than normal nitrogen content of flare gas that can result from nitrogen purging, can also increase the molecular weight (28 for nitrogen versus 16 for natural gas/methane) of recovered gases and potentially create problems with the Flare Gas Compressor. Reciprocating compressors increase the pressure of a constant inlet volumetric flow rate of gas, so for a given volume of gas an increase in molecular weight can result in an increase in the mass that is compressed. This increases the work that the compressor has to do, which can overload and/or damage the compressor and its ancillary equipment (e.g., motor, shaft, bearings, etc.).

Additional problems can occur for high molecular weight gases in multi-stage compressors. For most Flare Gas Recovery Systems the compression ratio (ratio of outlet pressure to inlet pressure) is high enough that more than one stage of compression is needed. The temperature of the gas increases as it is compressed, and the gas is cooled between stages in order to control the temperature increase. Operation of a reciprocating compressor with a feed stream that has a molecular

weight outside of the range for which it was designed can lead to a temperature increase exceeding the design limitations of the machine.

2.2.1.2 Hydrogen and/or Low Molecular Weight Gases

There is also the potential for much lower than average molecular weight recovered gas if increased flows of hydrogen occur. There are many process and reactor systems within the refinery that contain gases with high hydrogen content. When this equipment is decommissioned by depressurization to the flare gas header, there can be a sharp decrease in the flare gas' average molecular weight. Compressors are limited in their ability to function at significantly lower-than-design molecular weights, and mechanical damage, overheating or other malfunctions can occur. Hydrogen is also used for some catalyst cleaning, or "hot stripping" processes to remove residual hydrocarbons.

2.2.1.3 High Steam Content

A major advantage of using steam to clear hydrocarbons from equipment is its elevated temperature. However, this can be a disadvantage with respect to flare gas recovery. When the distance the gas must travel to reach the flare gas compressor is large (the Flare Gas Header is long), the gas will cool, and much of the steam will condense and be removed as water at the knock-out drum. However; with a shorter flare line or a long-duration steam out event, the temperature of the flare gas at the flare gas compressor can be elevated significantly. If the temperature of the flare gas stream at the inlet to the flare gas compressor exceeds machine limits, the gas must be diverted away from the compressor inlet in order to avoid mechanical damage. High temperature limits can also be exceeded within the stages of the compressor if the feed gas temperature is too high.

Another disadvantage of the use of steam is that most of what is added as a vapor will condense in the flare gas headers and must be removed via the water boot of a knock-out drum, either as the result of cooling as it flows through a long flare line or in a chiller/condenser included specifically for removal of water vapor from the flare gas. Either way a sour water stream is produced which will require treatment.

2.2.2 Fuel Gas Quantity and Quality

In general, flaring can occur as a result of fuel gas quantity and quality issues if (1) the quantity of fuel gas generated is larger than can be managed by the Flare Gas Compressors, Fuel Gas Unit, and/or fuel gas consumers; or (2) the quality (composition) of fuel gas is such that it must be routed to the flare because it cannot be utilized by the fuel gas consumers for a variety of reasons which may include safety, stringent gas turbine specifications, and to ensure low NO_X performance. When flaring is caused by fuel gas quantity and quality issues, the general cause is often maintenance activities, equipment failure and malfunction, emergency situations, and/or safety reasons. The quality and quantity of the fuel gas will also vary depending on the type of crude oil being processed, the severity of operations, and the relative contributions from the various process units. As discussed above, there is always a base-load to the Flare Gas Header.

Therefore, flaring can also occur as a direct result of fuel gas quantity and quality issues (i.e. the general cause is not maintenance activities, equipment failure and malfunction, emergency situations, and/or safety reasons).

Examples of flaring that may be caused by fuel gas quantity and quality when maintenance activities and equipment failure, or malfunction are the general cause are provided in preceding and proceeding sections, respectively. Some examples of flaring that may be caused by fuel gas quantity and quality that are not a result of maintenance activities, equipment failure and malfunction, emergency situations, and/or safety reasons are listed below:

- Production of off spec or excess light liquid products in excess of the capacity of the Flare Gas Compressors, the Fuel Gas Unit, and/or the fuel gas consumer's capacity to utilize all of the fuel gas.
- Daily and seasonal fluctuations in temperature which reduce condensing capacity (air cooling with fin-fans) and can cause significant increased production of light gases.
- Elevated gas production rates for the hydroprocessing or reforming units when operating near the "end-of-run" (the period just prior to unit turnaround);
- Seasonal changes in market demand for products that may result in decreased markets for light products and gases such as propane and butane.
- Operations where gases are produced that do not have a composition that is satisfactory for safe recovery to the Fuel Gas Unit. Examples include, but are not limited to, high hydrogen or nitrogen content, high steam content, low heating value (Btu content), and other incompatible constituents. If the heating value (Btu content) of gases is too low for recovery and use in the Fuel Gas Unit, the refinery must add significant quantities of fuel gas to the Flare Gas Header to ensure that there is sufficient heating value at the flares to ensure that any residual hydrocarbons are effectively combusted and the flare is not extinguished.

2.2.3 Equipment Failure and Malfunction

Non-recurrent equipment failure and malfunction including process upsets are considered to be refinery emergency conditions, however these are not always defined as an emergency as defined by Regulation 12-12-201. BAAQMD regulation 12-12-201 defines an emergency as a condition at a petroleum refinery beyond the reasonable control of the owner or operator requiring immediate corrective action to restore normal and safe operation that is caused by a sudden, infrequent and not reasonably preventable equipment failure, natural disaster, act of war or terrorism or external power curtailment, excluding power curtailment due to an interruptible power service agreement from a utility. In accordance with Regulation 12-12-301, flaring as a result of emergency conditions is allowed and emergency conditions do not need to be included in the FMP. However, the Benicia Refinery has elected to include equipment failure and malfunction including process upsets in this FMP to help minimize the frequency and magnitude of flaring during these events and to learn from these events so as to reduce the likelihood of recurrent

failure. Examples of flaring associated with equipment failure and malfunction including process upset, include, but are not limited to, the following:

- Flaring can be caused by failure or malfunction of major and/or minor equipment such as compressors, cooling systems, electrical switching equipment, pumps, valves, and instrumentation. Rotating equipment in the difficult services that exist in a refinery will always have a finite service factor, even when maintained at or better than industry standard levels of reliability. Even with an effective preventative maintenance program in place, equipment failures will at times still occur.
- Equipment failure and malfunction, including process upsets, can result in the need to quickly depressure vessels and other process equipment to the Flare Gas Header. This often results in a situation where the capacity of the Flare Gas Compressors and/or the Fuel Gas Unit is not sufficient to process all of the gas that is generated. As a result, the flares may be used to safely combust excess gases.
- Flaring can be caused by a complete or partial loss of a major utility such as cooling water, electrical power, steam production, and instrument air. These types of events can significantly impact refinery gas condensing capability which is likely to result in the generation of more gas than can be managed by the Flare Gas Compressors and/or Fuel Gas Unit.
- Malfunction or loss of a compressor (or ancillary equipment item) used to process refinery gases (Cat Gas Compressor, Coker Gas Compressor). Reduced capacity or loss of this equipment can result in significant flow of gases to the Flare Gas Recovery System until the plant is returned to its normal mode of operation and/or the equipment can be repaired.
- Malfunction or loss of an online Flare Gas Compressor can have a significant impact on the ability to recover fuel gas. Because of the difficult service for these compressors, the off-line compressor must typically be maintained or repaired before it is available as a spare compressor. As a result, even though the Benicia Refinery has a backup Flare Gas Compressor, it is possible that both compressors could be offline at the same time. For example, if the reliability and required maintenance of the compressors is such that they have each have 95 percent online availability, statistically they would both be offline 0.25 percent of the time or about one day per year.
- Process or equipment failure or malfunction of the fuel gas treatment scrubbers, the amine regenerator, SGU, TGU, and/or associated equipment.

For the refinery emergency situations listed above, it is critical that the refinery flare systems are available to safely dispose of large quantities of gases that may be generated. The flares prevent these gases from being released directly to the atmosphere and significantly reduce any potential safety and environmental impacts.

2.3 Current Flare Minimization Procedures

The Benicia Refinery has a long history of implementing physical and procedural changes to improve the effectiveness of the Flare Gas Recovery System. While reductions in flared gas volumes have been achieved in recent years (as discussed in Section 3), the Benicia Refinery continues to monitor the sources of flow to the Flare Gas Recovery System and continuously work to minimize the frequency and magnitude of flaring events. This ongoing process of improvement is a cornerstone of the refinery's flare minimization efforts. At the Benicia Refinery, flare minimization procedures include the following:

- Planning Component

  For upcoming maintenance including startup, shutdown, and turnaround activities that could result in flaring, a planning component is used to maximize flare gas recovery and minimize the frequency and magnitude of any flaring. When the planning component is conducted, flare minimization techniques, practices, and lessons learned from previous review components are evaluated and considered.

- Review Component

  When reportable flaring events occur, an analysis is conducted to evaluate the cause of flaring and potential feasible measures that can be incorporated into future operational, maintenance, or planning practices. This component is consistent with the Regulation 12-12-405 and 12-12-406 requirements for review of reportable events above identified threshold limits (0.5 mmscfd or 500 lb/day SO_2 emitted). For flaring events that do not exceed the thresholds for a formal analysis, lessons learned are still captured and incorporated into future planning.

- Preventative Maintenance Component

  Preventative maintenance is needed to minimize the occurrence and frequency of equipment failure and malfunction which can ultimately lead to flaring. The adequacy of maintenance schedules and protocols have recently been reviewed at the Benicia Refinery. If a recurrent failure were to occur that resulted in flaring, the Benicia Refinery would re-evaluate the adequacy of maintenance schedules and protocols.

These flare minimization activities are depicted in the flowchart in Figure 5. Inter-disciplinary teams are generally involved in the process, including members of the environmental, operations, engineering, and maintenance staffs as appropriate. This approach ensures that input from a variety of viewpoints is considered during the event review.

Figure 5 – Flare Minimization Flowchart

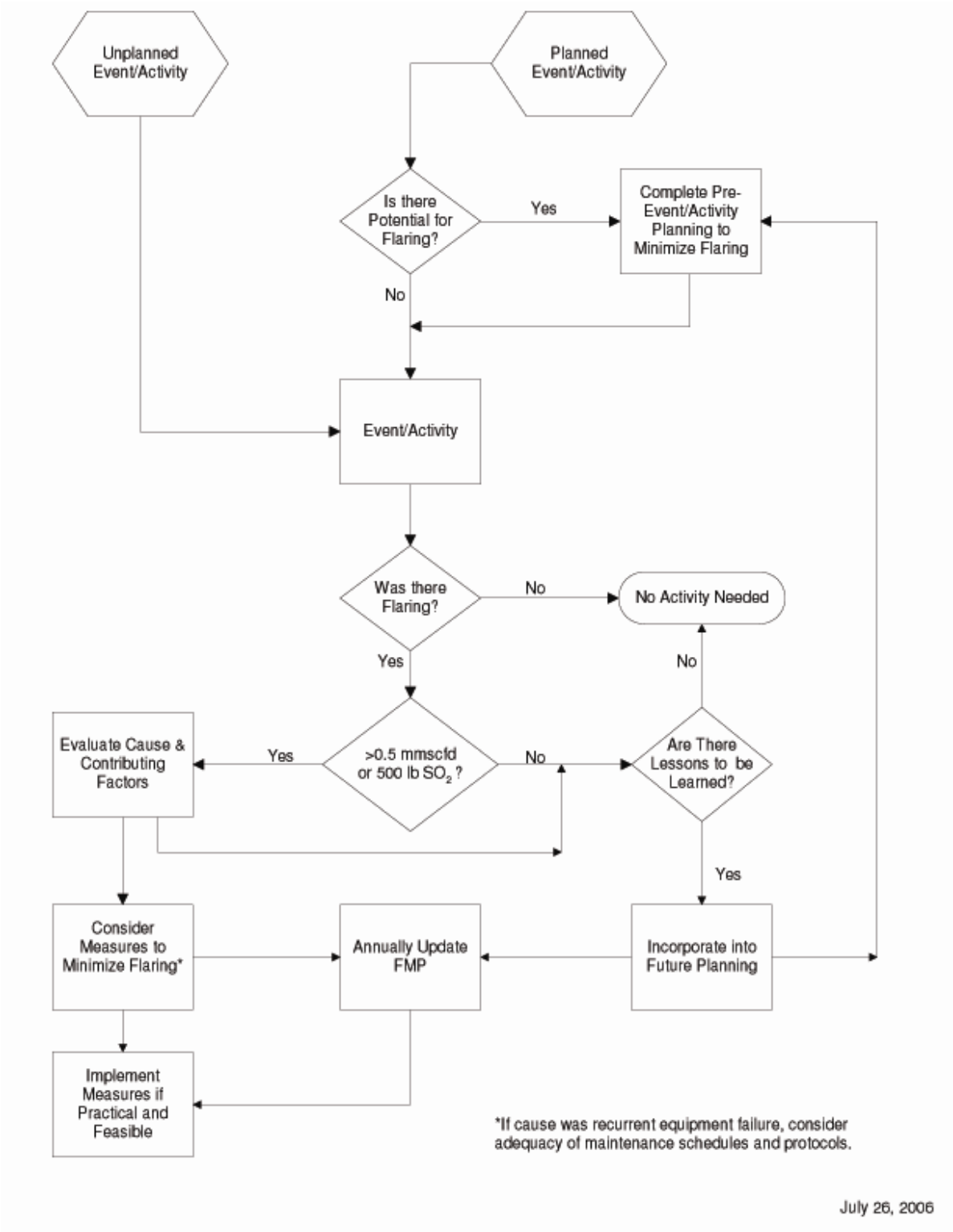

2.3.1 Planning for Maintenance Activities that May Result in Flaring

One area in which the Benicia Refinery has achieved significant improvements is in the preparation for maintenance including startup, shutdown, and turnaround activities that may result in flaring. Operations supervisory personnel generally prepare and issue specific operating procedures each time a significant activity is conducted to ensure the activities are conducted safely, effectively, and with a minimum of impact on the environment. The procedures specifically consider safety and environmental precautions every time they are executed, including a review of any potential impacts on the Flare Gas Recovery System and the potential for flaring.

Some examples of these types of activities which are generally planned in advance and occur at varying frequencies include:

- routine maintenance activities which can have a weekly, monthly, or yearly frequency;
- reactor catalyst regeneration or change-out activities which can have a monthly, yearly, or multiple year frequency;
- major refinery turnarounds which have a frequency of every 5 to 7 years; and
- individual turnarounds at some process units which may have a different, more frequent schedule.

The Benicia Refinery has incorporated flare minimization procedures into the planning process for these events to ensure that previous experiences are considered, that the upcoming circumstances impacting the event are taken into account, and to see if any anticipated causes of flaring are identified. The planning process for activities identified as having the potential for flaring considers the following general questions:

- Can this activity result in a reportable level of flaring (greater than 0.5 mmscfd or 500 lb/day SO2 emitted)?
- Has this event historically been a cause of a reportable flaring event?
- Why will this activity cause flaring? Can procedures be implemented to minimize or eliminate flaring?
- Are there other events occurring at the same time, such as other units being out of service, which could impact the ability to recover fuel gas during this event? Can these events be staged and coordinated to maximize flare gas recovery and minimize the frequency and magnitude of flaring?
- What is the status of the refinery fuel gas balance? Can natural gas or other makeup fuels be backed out of the Fuel Gas Unit? Are COGEN and other large fuel gas consumers online to receive fuel gas?
- How is the refinery fuel gas balance expected to be managed during these events? Balance often changes significantly depending on what gas producers and consumers are impacted.

- Will the gases that are generated during depressuring, venting, purging, or other activities be of a quality that is acceptable for recovery?
- What mitigating activities should be incorporated in the activity plan to manage the potential flows to the Flare Gas Recovery System and/or the associated flares?
- Any recommendations that are identified during this planning process are then considered for inclusion in the activity procedures and incorporated as appropriate.

2.3.2 Flaring Event Review Program

An important component of the flare minimization process is the review of flaring events that occur and exceed the BAAQMD levels for reportable flows (greater than 0.5 mmscfd or 500 lb/day SO_2 emitted). The flaring event review process is incorporated with the BAAQMD reporting requirements in the following manner:

The occurrence of a reportable flaring event is identified;

- The event is managed to ensure the safety of facility operations, with the operations team considering both the maximization of the recovery of gases from the Flare Gas Header (depending on composition), and the minimization of any flared gases;
- All record keeping required by BAAQMD regulations is accomplished including flow recording, sampling of flared gases, and monitoring of flare drum seal levels;
- These results are compiled to prepare a summary of the event quantities and flows; and
- An analysis is performed to identify the cause of the event.

The causal analysis involves a coordinated team of refinery operations, environmental, and staff from other disciplines as appropriate (e.g., mechanical and electrical). The team reviews the operational conditions and activities leading up to the flaring event, and upon determining a cause, identifies any potential follow-up activities that may be implemented to minimize or eliminate the possibility of a similar event occurring. However, in some cases, the cause of flaring cannot be determined. Typically, this is because the event is minor (<0.5 mmscf and/or 500 lbs SO2). The Valero Benicia Refinery has developed systems to try and pinpoint the cause of all flaring events, most of which can be traced back to a source, but there are instances when a direct cause cannot be determined.

Typical recommendations may include improvements to maintenance procedures, changes to operational practices, the addition of instrumentation to monitor critical parameters, and/or changes to the planning and execution of similar activities in the future to minimize the chance of a similar event.

2.3.3 Flare Minimization Through Reliability Improvement

Over the years, the Benicia Refinery has instituted a series of management practices that have a direct and positive impact on the reliability of the equipment and processes in the refinery. These practices address such issues as equipment mechanical integrity, maintenance and inspection, training, and operating procedures. They generally can be

organized along the lines of the Process Safety Management (PSM) rules under OSHA. The improved reliability has resulted in fewer unplanned equipment failures and greater unit run lengths (time between maintenance turnarounds).

Improved reliability reduces the amount of flaring in several ways. First, it reduces the number of unscheduled and emergency shutdowns. Such incidents generally result in significant flaring associated with the shutdown and subsequent startup activities and possibly flaring associated with clearing of the equipment that needs to be repaired. Reducing the number of such incidents obviously reduces the average amount of flaring done by the facility over time. Second, better reliability lengthens the average process unit run length. For example the average run length for the CKR back in the early 1980s was only about nine months, but with reliability improvements made over the years, the run length has been extended to almost three years. Clearly in the CKR example, better reliability has reduced planned startup/shutdown flaring (for the CKR) by a factor of three simply by reducing the number of downtimes needed for maintenance.

Individual reliability improvements may be difficult to quantitatively link to a flaring effect. However, in the example of the CKR, there were hundreds of changes made over the years that in aggregate improved the unit run length. Assigning a particular flaring reduction to a specific reliability improvement is at best problematic. Yet, the outcome of the reliability process is very clear. And for some units the effects are even more dramatic. Average run length for the FCCU in the early 1980s was about two years and now is approaching six years.

In the years 2004 and 2005, with the assistance of a third party expert, Becht Engineering, the Benicia Refinery conducted a site-wide reliability assessment to identify opportunities for improvement in the reliability of equipment. A series of recommendations came out of that study that the refinery has already implemented or is in the process of implementing. These study recommendations, as they relate to flare minimization, have been incorporated into this FMP.

The Benicia Refinery has developed written procedures for all operating units. These procedures are in addition to each units Operating Manual, which contains all the process information, engineering data, and reference sources that are required to operate the unit in a safe, reliable, efficient, and environmentally sound manner. Operating procedures can reduce flaring such as instructing operators to route streams to alternate locations during depressurization or heating up a unit slowly upon unit startup.

The Benicia Refinery's training program was developed to ensure that employees involved in the operation and maintenance of processes are trained in the tasks and information necessary to safely and effectively perform their work. Operators who are trained how to operate their units safely and efficiently, depressure equipment according to operating procedures, and communicate with other units effectively play a vital role in the overall goal to reduce and control flaring activities. In addition, operator training reduces the chance of upsets or other unplanned events that can result in flaring.

2.4 Refinery Flare Gas Recovery System including South and North Flares

The sources of normal or base level flow to a refinery flare gas collection system are varied, but in general result from many small sources such as leaking relief valves, instrument purges and pressure control valves for refinery equipment items (e.g., overhead systems for distillation columns). Added to this low level base load are small flow spikes from routine maintenance operations, such as clearing hydrocarbon from a pump or filter by purging the volatiles to the flare gas header with nitrogen or steam. Additional flare load can also result from routine process functions often related to operation of batch or semi-batch equipment, for example, the regeneration procedures performed at catalytic naphtha reforming units which involve periodically removing hydrocarbon residuals from catalyst beds via a variety of procedures and directing the resulting gases to the recovery header.

Also, scheduled maintenance activities often result in higher flows to the flare gas recovery system. Equipment being prepared for maintenance must be essentially free of hydrocarbons before opening. This is necessary for both safety and regulatory reasons, including compliance with Regulation 8-10. Typical decommissioning procedures include multiple steps of depressurization and purging with nitrogen or steam, neither of which is suitable for recovery as fuel gas, to the flare gas header.

Although maintenance-related flows can be at times large, the ultimate design and sizing of refinery flare systems is, without exception, driven by the need for the safe disposal of much larger quantities of gases during emergencies and process upsets. A major emergency event, such as a refinery power failure, requires the safe disposal of a very large quantity of gases during a very short period of time in order to prevent a large increase in system pressure and avert a serious accident, hazard, or release of refinery gas directly to the atmosphere. The flows that the flare system manages during an event of this type are several orders of magnitude greater than the normal or baseline flow rate.

A header for collection of vapor streams is included as an essential element of nearly every refinery process unit. These headers are commonly referred to as flare gas headers because they are typically connected to a flare system. However, at many refineries, including the Benicia Refinery, most of the gases sent to a flare gas header are normally routed away from the flare(s) and recovered using a flare gas compressor(s) to send the gases to a fuel gas unit where they become fuel for the refinery's furnaces, boilers, and other combustion devices. At most refineries, the quantity of gas in the flare header needing recovery is relatively small in comparison to the total quantity of fuel gas produced at the refinery. However, it is in the economic interest of the refinery to recover even this small fraction of gas instead of sending it to a flare, because these recovered gases offset the need to purchase additional fuels such as natural gas.

The primary function of the flare gas header is safety. It provides the processing units with a controlled outlet for any excess vapor flow, nearly all of which is flammable, making it an essential safety feature of every refinery. Each flare gas header also has connections for equipment depressurization and purging for maintenance activities including startup, shutdown and turnaround. Pressure relief devices are also routed to the header system

to handle process upsets, malfunctions, emergency and other safety-related releases. By routing any excess collected gases through a flare, the majority (greater than 98 percent) of hydrocarbons in the gases are destroyed and converted to combustion byproducts (primarily water and CO_2) before reaching the environment.

It is common practice for a flare gas header to incorporate hydrocarbon liquid knockout (KO) drums for separation and removal of entrained hydrocarbon liquids from the gas stream. This minimizes the possibility of hydrocarbon liquid being carried forward to a flare gas compressor or any of the flares associated with the header. Hydrocarbon liquid will result in severe mechanical damage to most types of compressors and cannot be safely and completely burned in a flare. The vapor stream from a unit KO drum is then routed to the central refinery flare gas recovery system. The KO drum and header system may serve one process unit, or may serve a number of units in one integrated system.

A typical central refinery flare gas recovery system consists of a series of branch lines from various unit collection systems which join a main flare gas header. The main flare gas header is in turn connected to one or more flare gas compressors and to one or more flares. Normally, all vapor flow to the flare gas header is recovered by a flare gas compressor(s), which routes the gases to a fuel gas treatment scrubber(s) were contaminants such as sulfur are removed. Process gasses that are generated in excess of what can be handled by flare gas compressor(s), treatment scrubbers(s) and/or fuel gas consumers flow to a refinery flare where they are safely disposed of by combustion.

A water seal drum is typically located at the base of each flare to serve several functions. A water level is maintained in the seal drum to create a barrier which separates or “seals” the flare gas header from the flare. The flare gases must pass through this water in order to get to the flare. The depth of liquid maintained in the seal determines the pressure that the gas in the flare gas header must reach before it can “break” the seal and enter the flare. This creates a positive barrier between the header and the flare, ensuring that so long as the flare gas recovery system can keep pace with net gas production, there will be no flow from the flare gas header to the flare. It also guarantees that a positive pressure will be maintained at all points along the flare gas header, eliminating the possibility of air leaking into the system which could create an explosive atmosphere. Finally, the seal drum provides a positive seal to isolate the flare, which is itself an ignition source, from the header and the process units. Some flare gas recovery systems combine multiple flares with a range of water seal depths, effectively “staging” operation of the various flares.

Gases exit the flare via a flare tip which is designed to promote proper combustion over a wide range of gas flow rates. Steam is often used to improve mixing between air and hydrocarbon vapors at the flare tip, improving the efficiency of combustion and reducing smoking. A properly designed flare tip will also help to minimize noise levels during flaring events.

A small amount of fuel gas or natural gas continuously flows to each flare for two reasons. First, the pilots on the flare tip are kept burning at all times to ignite any gas flowing to the

flare. Additionally, for some flare systems, a small purge gas flow is required to prevent air from flowing back into the flare stack.

Properly designed and operated flare systems destroy at least 98 percent of the hydrocarbon compounds that reach them, producing combustion products of CO_2 and water. Other combustion products include sulfur oxides (SO_2) if there are sulfur compounds in the flared gases and small quantities of nitrogen oxides (NO_X).

At the Benicia Refinery, the Flare Gas Recovery System is used to recover excess gases that are generated at various refinery processing units. These gases are collected in the Flare Gas Header and a majority (approximately 90 percent) are compressed and directed to the refinery Fuel Gas Unit. At the Fuel Gas Unit, the recovered gases are blended with other refinery sources of fuel gas, treated for removal of sulfur compounds, and directed to the refinery fuel gas users, including furnaces, boilers, gas turbines, and COGEN. The system can also direct gases to one or both of the flares that are connected to the Flare Gas Header. However, this occurs only if the composition of the gases is not compatible for reuse as fuel gas (e.g., nitrogen, steam, or low Btu content), or if the instantaneous rate of flow exceeds the capacity of the Flare Gas Compressors. By recovering these gases and reusing them, the refinery achieves multiple objectives – increased energy efficiency, reduced oil loss, minimization of the frequency and magnitude of flaring events, and effective control of hydrocarbon emissions.

The major components of the Flare Gas Recovery System include process unit liquid knock-out (KO) drums, the Flare Gas Header, Flare Gas Compressors, the Fuel Gas Unit (including fuel gas scrubbers and distribution headers), flare water seal drums, and the two flares (South and North). Figure 6 provides a simplified diagram of the Flare Gas Recovery System at the Benicia Refinery. A detailed process flow diagram of the Flare Gas Recovery System (Drawing No. 36-000-03E-73503) is provided in Appendix B.

Figure 6 – Flare Gas Recovery System

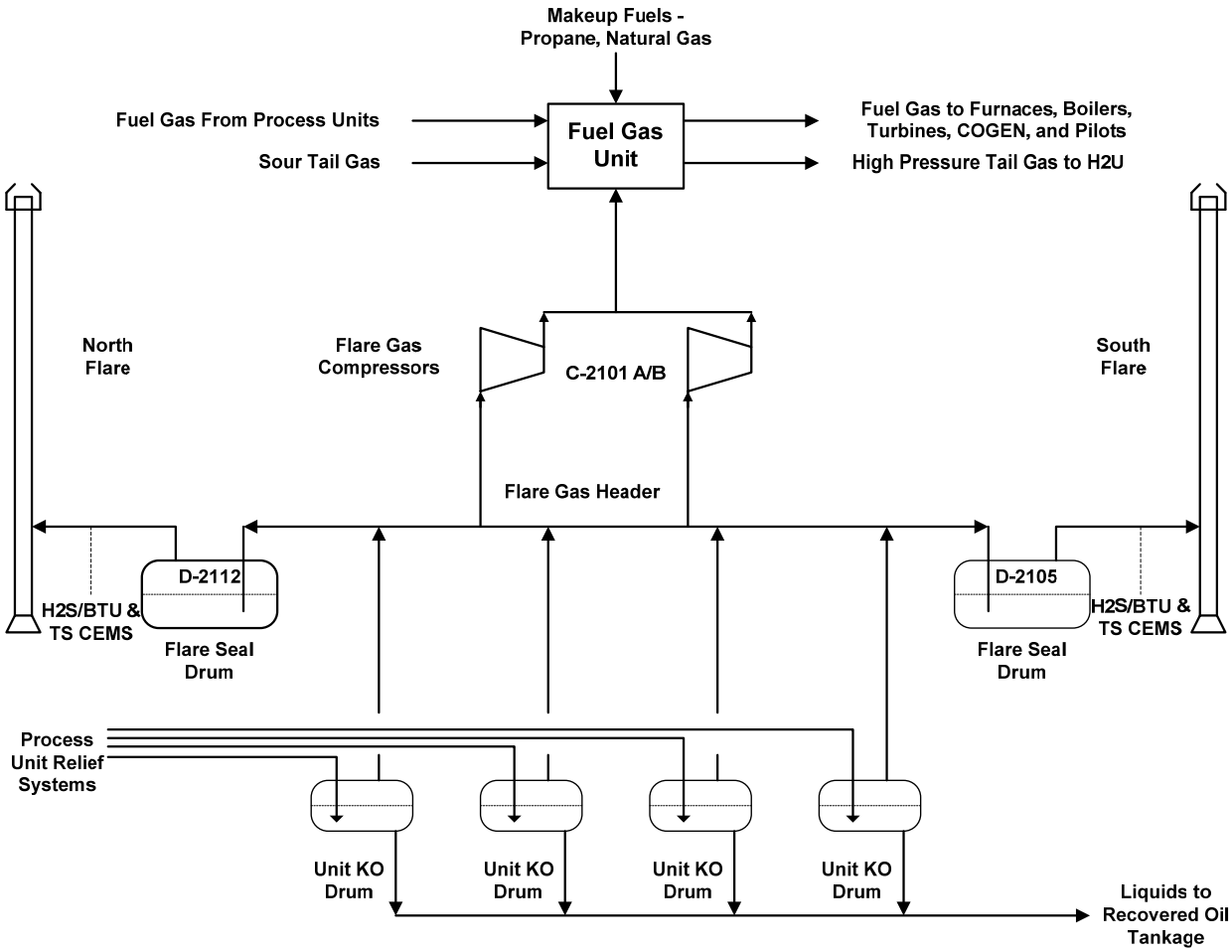

2.4.1 Process Unit Liquid KO Drums and Flare Gas Header

Gases from process unit equipment pressure relief valves, and in some cases process vents, are collected in headers within the process units and routed to liquid knockout (KO) drums. The knockout drums capture and recover entrained liquids, and minimize the chance of liquid carry over into the Flare Gas Recovery System. Liquids collected in the process unit liquid KO drums are pumped to recovered oil tankage, and are then reprocessed as feed stock to various process units. The vapors from the knockout drums enter the Flare Gas Header.

The Benicia Refinery Flare Gas Recovery System includes the following process unit liquid KO drums:

- D-2101 is located at the FCCU and serves the FCCU, CLE, PS, VLE, NRU, ALKY, and CKR units.

- D-2102 is located at the H2U and serves the H2U, HCU and COGEN units.
- D-2113 is located at the H2U and serves the CFHU, FG, DIM, SGU, COGEN and H2U units.
- D-2103 and D-2104 are located at the ALKY and serve the ALKY and UTIL units.
- D-2131 is located at ALKY and serves the ALKY and BTR units.
- D-2130 is located at the MRU and serves the MRU, ULSD, and BAP units.

There are additional tie-ins to the Flare Gas Header that are not routed through a process unit liquid KO drum. These tie-ins include various vapor recovery systems, product spheres, and the Acid Gas Flare system (via D-2107, the SGU Liquid KO Drum) which is normally closed.

The Flare Gas Header is a 42-inch line that runs throughout the refinery. This header is used to connect the process unit KO drums to two Flare Gas Compressors. A flare seal drum and a flare are also connected to both the south and north ends of the Flare Gas Header. One or two compressors are used to recover gases from the Flare Gas Header and send them to the Fuel Gas Unit where they are treated to produce fuel gas for furnaces, boilers, gas turbines, and COGEN. Under normal operating conditions, the Flare Gas Compressors remove enough gases in the Flare Gas Header to maintain a header pressure that does not “break” the water seal in the flare water seal drums. Under normal operating conditions, the south and north water seals prevent gases from reaching the flares and ensure that all the gases in the Flare Gas Header are compressed and sent to the refinery’s Fuel Gas Unit.

Detailed piping and instrumentation diagrams of the process unit liquid KO drums (Drawing Numbers 112-KE-31, 114-KE-9, 116-KE-12, 43-000-03D-17468 and 44-000-03D-30869) are provided in Appendix C.

2.4.2 Flare Gas Compressors, C-2101 A/B

The Flare Gas Recovery System utilizes two Flare Gas Compressors (C-2101 A/B) to route gases in the Flare Gas Header to the Fuel Gas Unit via the Sour Gas Header. C-2101 A is a 3-stage compressor that was installed in 1975 (this unit was originally constructed in 1953 and was installed as a used unit). C-2101 B is a 2-stage compressor that was installed as a new unit in 1983. These two reciprocating compressors are each rated at 6 mmscfd. This rating is based on inlet conditions of 0 psig and 80F for C-2101 A and 0 psig and 70F for C-2101 B. Both of the Flare Gas Compressors discharge to the Sour Gas Header at 87 psig at 100F. When C-2101 A was originally installed it was designed to discharge to either the Sour Gas Header or to the higher pressure CLE, however, the line-up to CLE is not currently used.

Prior to 1975, all gases sent to the Flare Gas Header were flared, which was a common operating practice (and still is at many refineries throughout the world). The first Flare Gas Compressor (C-2101 A) was installed in 1975 when it was very uncommon for refineries to operate flare recovery systems. The Benicia Refinery operated for eight

years with a single Flare Gas Compressor. During this eight-year period, flaring occurred whenever the Flare Gas Compressor was down for maintenance. Additionally, if there was a mechanical failure, the Flare Gas Compressor could be down for a prolonged period of time to conduct repairs. In 1983, a second Flare Gas Compressor (C-2101 B) was installed which greatly improved the on-line availability and significantly reduced flaring.

Today, during normal operations, one Flare Gas Compressor is operated as the primary unit and the other is available as a spare unit. Primary and spare duties are switched when the off-line compressor is started and the on-line compressor is shut down. When maintenance is not being conducted at the off-line compressor, it is maintained in hot standby (warm jacket water, oil circulating, suction and discharge valves unblocked) so that it can be quickly brought into service if needed. This mode of operation has been selected because it achieves the primary goal of having at least one Flare Gas Compressor on-line. This can be virtually achieved if there is always a spare Flare Gas Compressor that is available. However, the spare unit cannot always be available because inspection, maintenance, and repairs must be conducted. As a result, it is still possible that both Flare Gas Compressors may not be available during these times. The use of a primary and spare has greatly improved on-line reliability and it is very uncommon that at least one Flare Gas Compressor is not available.

Operating the spare Flare Gas Compressor in constant service would approximately double the amount of time needed for inspection, maintenance, and repair. During inspection, maintenance, or repair of one compressor, there is not spare unit available if the on-line compressor experiences a failure. Therefore, if a failure of the on-line compressor occurs during inspection, maintenance, or repair of the off-line compressor, flaring would occur for days or weeks until one of the two compressors could be put back into service. Any reductions in flaring achieved by running the spare compressor in constant service would be very small and significantly less than the increased flaring that would be caused by losing both compressors. Flaring reductions would only occur by eliminating the 10 to 20 minute period that it takes to bring the off-line compressor into service when there has been a failure of the on-line compressor. There would be no reduction in flaring during planned switching of the compressors because the off-line unit is started before shutting down the on-line unit.

It is possible to operate both Flare Gas Compressors simultaneously. However, under normal operating conditions, a single Flare Gas Compressor provides more than enough capacity to recover all the gases sent to the Flare Gas Header. If a larger than normal load on the Flare Gas Header is expected (e.g., planned maintenance) and enough fuel gas users are anticipated to consume fuel gas (e.g., natural gas can be cut to the Fuel Gas Unit), refinery operators can proactively start-up the spare Flare Gas Compressor (assuming that it is available). Proactively using both Flare Gas Compressors reduces flaring. However, it is not common for situations to occur when both units can be used to reduce flaring. Continuous operation of both Flare Gas Compressors would actually increase flaring because it would decrease on-line reliability (there would be a greater chance that both could be down at the same time).

Major maintenance of the Flare Gas Compressors is not scheduled and there are no manufacturer's recommendations for major maintenance. Flare Gas Compressor operating parameters are closely tracked. If there are indications that performance is beginning to degrade (e.g., increase in operating temperature or a decrease in compression capacity), the spare Flare Gas Compressor is first placed on-line as the new primary unit. After the spare Flare Gas Compressor is placed on-line, the original unit is taken off-line to conduct maintenance and repair. Once the maintenance and repair activities have been completed, that unit becomes available as the spare unit and is placed in hot standby. Minor maintenance activities such as lubrication are conducted at regular intervals.

Additionally, the Benicia Refinery has recently implemented a program of conducting an approximate 14-day major and an approximate 5-day minor inspection of each compressor approximately every 8 and 3 years, respectively. However, the inspection schedule is adjusted if major maintenance occurs based on tracking compressor performance (described above). At the time of the major and minor inspections, maintenance and repair is conducted based on the results of the inspection and can add to the time that the unit is down (not available as a standby unit).

There are no logic controls that would automatically trigger the spare Flare Gas Compressor to come on-line if the primary unit were to fail and go off-line. The spare compressor must be manually started. However, during a planned switch of the primary and spare compressor, the spare is always placed into service prior to removing the primary from service. In the event that the primary Flare Gas Compressor experiences a mechanical failure and goes off-line unexpectedly, the spare unit is started as soon as possible to minimize flaring. It typically takes approximately 10 to 20 minutes for an operator to be called out and complete the start-up sequence. During the period of time that there are no Flare Gas Compressors in service, all gases collected in the Flare Gas Header must be flared because there is no path to the Fuel Gas Unit.

The Flare Gas Compressors are equipped with a number of automatic shutdown controls to prevent mechanical failure. For example, both Flare Gas Compressors have a high temperature trip that is set at the maximum operating discharge temperature of 325° F. The Flare Gas Compressors are also equipped with automatic shutdown controls for high oxygen (set at 4 percent oxygen) to prevent a combustible mixture at the downstream Fuel Gas Unit. A number of issues can lead to high operating temperatures such as a problem with the lubrication and cooling systems. Higher than normal operating temperatures can also be a sign of excessive wear or other mechanical problem that require maintenance. If low molecular weight gases, such as hydrogen, are sent to the Flare Gas Compressors, operating temperature can potentially increase up to the high temperature trip point. High oxygen levels can be caused by air leaks into the Flare Gas Header. Flare Gas Compressor trip points are summarized in. It is extremely uncommon that the Flare Gas Compressors shutdown because of high temperature, high oxygen, or some other automatic trip. During a trip event, all gases sent to the Flare Gas Header would be sent to the South and North Flares. After a trip event, the spare Flare Gas

Compressor, if available, would be started as soon as possible, normally in about 10 to 20 minutes.

There are instances when the Flare Gas Compressor(s) must be manually shutdown, which will result in flaring. High levels of nitrogen cannot be sent to the Fuel Gas Unit because some combustion equipment is sensitive to large changes in fuel heating value (Btu content). Nitrogen reduces the fuel's heating value which can impact operations and NOX control at the gas turbines and at COGEN. The gas turbines are particularly sensitive to fuel heating value. A big enough drop in heating value caused by sending too much nitrogen to the fuel gas system can cause a gas turbine to trip off-line. Such an event would cause significant flaring because loss of a gas turbine would cause an emergency shutdown of one or more refinery process units (both the unplanned shutdown and subsequent startup would cause flaring). If large levels of nitrogen are expected from operations such as vessel depressurization, equipment cooling, and equipment warming, operators will shutdown the Flare Gas Compressors and then restart them when nitrogen levels have dropped.

Table 2-1 – Flare Gas Compressor Trip Set Points

Operating Parameter	Trip Set Point	
	C-2101 A	C-2101 B
Compressor discharge high temperature, ^oF	325	325
Compressor suction high temperature, ^oF	140	140
Compressor bearing high temperature, ^oF	none	210
Cooling water high temperature, ^oF ($1^{st}/2^{nd}$ stage)	none	130/140
High oxygen, percent	4	4
Lube oil low pressure, psi	20	15
Compressor suction low pressure, inches of H_2O	0	0
Piston rod overload, delta psi ($1^{st}/2^{nd}$ stage)	none	35/100
D-2114 high level, inches	157	none
D-2115 high level, inches	33	none
D-2116 high level, inches	85	none
D-2117 high level, inches	126	none
D-2119 high level, inches	none	72
D-2120 high level, inches	none	57
D-2121 high level, inches	none	99

Detailed piping and instrumentation diagrams of the two Flare Gas Compressors (Drawing Nos. 36-000-03E-03537, 36-000-03E-09060 and 36-000-03E-09061) are provided in Appendix C.

2.4.3 Fuel Gas Unit

The Flare Gas Compressors are used to send an average of about 4 to 5 mmscfd of gas from the Flare Gas Header to the Fuel Gas Unit. In the Fuel Gas Unit, these recovered gases are blended with other refinery gases and, at times, purchased natural gas to produce an average of about 75 mmscfd of fuel gas that is burned in refinery furnaces, boilers, gas turbines, and COGEN. In addition, the Fuel Gas Unit produces an average of about 23 mmscfd of hydrogen rich gases that are sent to the H2U. The following gas streams are produced at the Fuel Gas Unit:

- Low pressure fuel gas (LPFG) for furnaces and boilers;
- High pressure fuel gas (HPFG) for four process gas turbines located at ALKY, HCU, FCCU, and CLE;
- Pilot gas;
- A blend of refinery fuel gas and natural gas for the COGEN; and
- High pressure tail gas (HPTG) for the H2U.

The recovered gases (an average of about 4 to 5 mmscfd) are sent to the sour gas header and mixed with other gases which are sent to a Fuel Gas Treatment Scrubber (T-1201) to produce an average of about 50 mmscfd of clean refinery fuel gas. This scrubbed refinery fuel gas from T-1201 is then sent along with other gases and/or purchased natural gas to the LPFG system, HPFG system, and the COGEN fuel system. The scrubbed refinery fuel gas from T-1201 can also be sent to the pilot gas system which is normally supplied only with purchased natural gas. Figure 7 provides a simplified diagram of the Fuel Gas Unit.

The Benicia Refinery maintains a single Fuel Gas Unit which must balance the demands of the fuel consumers within the refinery with the fuel gas produced by the refinery. The Fuel Gas Unit is also closely integrated with the refinery's hydrogen system, which like fuel gas is both produced and consumed within the refinery. Excess hydrogen can be returned to the Fuel Gas Unit within certain limits on quality and quantity.

The major users of refinery fuel gas include furnaces, boilers, four process gas turbines, and the COGEN plant. All of the users require the fuel gas to have a sufficient level of heating value (Btu content) to sustain proper combustion, particularly in burners that are specially designed to minimize the generation of NOX emission (e.g., low NOX burners). The sulfur content of the fuel gas must also be limited to minimize the formation of SO2 emissions when burned. Most of the refinery gases contain some amount of sulfur, so they are collected and treated to reduce sulfur levels (by amine absorption) with subsequent recovery of the sulfur at the SGU.

Different operations in the refinery produce fuel gases of different qualities. These are usually segregated to produce specific refinery products or intermediate streams. The atmospheric distillation (PS), NRU, and hydroprocessing units (CFHF, VNHF, LCNHF, HCNHF, DHF, JHF, ULSD and front end of HCU) produce gases that are primarily

saturated hydrocarbon compounds which are separated into propane, butane, and gasoline range materials, and light ends which are routed to the Fuel Gas Unit. Heavy oil upgrading processes (primarily the CKR and FCCU) produce gases that contain significant amounts of unsaturated hydrocarbons (olefins) which are processed into fuel gas for internal use, chemical feedstocks (e.g., propylene and butylene), or are reacted further to produce gasoline range materials (e.g., dimate and alkylate).

Figure 7 – Fuel Gas Unit

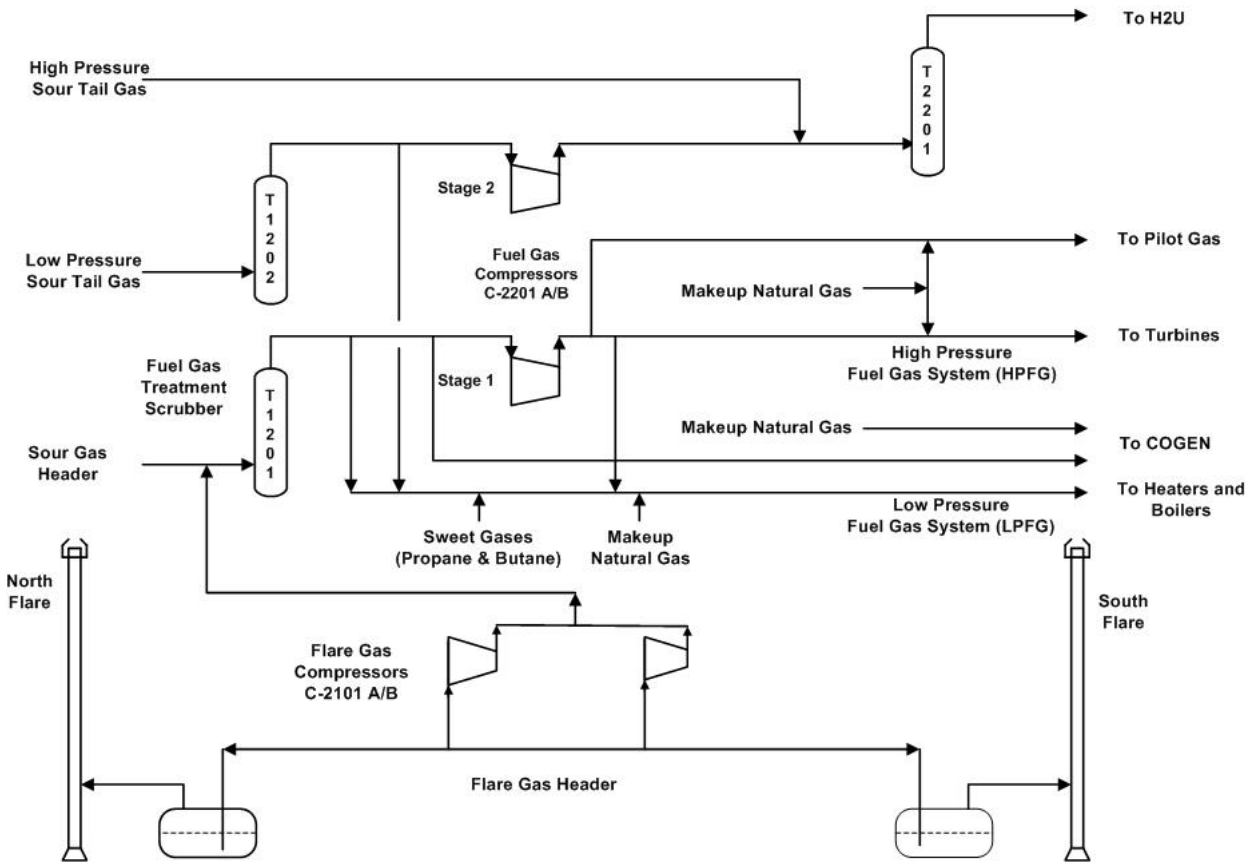

2.4.3.1 Fuel Gas Treatment Scrubber, T-1201

The Fuel Gas Treatment Scrubber is an amine treater, which contacts a circulating amine solution with sour fuel gases in a packed bed. In the scrubber, sulfur compounds consisting primarily of H_2S are absorbed from the sour fuel gas into the amine solution. This fuel gas treatment is required to remove the sulfur compounds so they do not form SO_2 when the fuel gas is ultimately combusted in refinery furnaces, boilers, gas turbines, and COGEN. The circulating amine solution is then regenerated in a stripper with a steam reboiler and returned to the scrubber. The H_2S rich gases from the stripper are routed to the SGU where elemental sulfur is

ultimately recovered and sold as a product. The refinery operates additional fuel gas treaters which share a common amine regeneration system.

The Fuel Gas Treatment Scrubber (T-1201) has a maximum capacity of about 70 mmscfd of sour fuel gas. The clean fuel gas produced at T-1201 is regularly sent to the HPFG system, LPFG system, and COGEN fuel system. Additionally, the clean fuel gas can be sent to the pilot gas system. Light hydrocarbons (primarily methane and ethane) from CLE are the primary source of sour fuel gas that feeds T-1201. CLE supplies on average about 36 mmscfd of sour fuel gas to T-1201 which accounts for about 70 percent of the total sour fuel gas sent to T-1201. The gases at CLE are originally generated at the FCCU and CKR and are sent to CLE to produce pentanes and various intermediate feed products for ALKY, DIM, LCHFF, and HCNHF. The gases from CLE that are sent to T-1201 (about 36 mmscfd) account for a small percentage of the total gases processed at CLE.

There are a number of other smaller sour fuel gas streams that makeup the remainder of the sour fuel gas feed to T-1201 (the remaining 30 percent not supplied by CLE). The Flare Gas Compressors supply on average about 4 to 5 mmscfd of sour fuel gas to T-1201 which accounts for about 10 percent of the total sour fuel gas sent to T-1201. A majority of this remaining T-1201 feed comes from VLE which is primarily supplied by the PS and HCU.

A detailed piping and instrumentation diagram that includes the Fuel Gas Treatment Scrubber (Drawing No. 122-KE-2) is provided in Appendix C.

2.4.3.2 HPFG System

The HPFG system supplies an average of about 12 mmscfd of fuel gas at about 215 psig to the four gas turbines. HPFG is mostly comprised of refinery fuel gas that has been scrubbed in T-1201, which is then raised to a higher pressure by reciprocating compressors (C-2201 A/B, Stage 1). It is important that the heating value of HPFG is maintained between about 950 and 1100 Btu/scf because the gas turbines are sensitive to the heating value of fuel gas. On average, less than 1 mmscfd of purchased natural gas is blended into HPFG. Excess HPFG (compressed and scrubbed refinery fuel gas from T-1201 and C-2201 A/B, Stage 1) is sent to the LPFG system.

2.4.3.3 LPFG System

The LPFG system supplies an average of about 53 mmscfd of fuel gas at about 60 psig to the refinery. LPFG is used on a continuous basis at the furnaces and boilers throughout the refinery. In addition, LPFG is used for auxiliary startup burners at the FCCU and CKR and for a startup furnace at ALKY.

LPFG is primarily comprised of refinery fuel gas that is scrubbed at T-1201. LPFG also includes excess HPFG (compressed and scrubbed refinery fuel gas from T-1201 and C-2201 A/B, Stage 1) that is let down into the LPFG system. In addition, LPFG also includes excess hydrogen-rich tail gas from the HPTG system that is

scrubbed at T-1202 (an average of about 8 mmscfd). Additionally, sweet refinery fuel gas (propane and butane) can be sent to the LPFG system (an average of less than 1 mmscfd). When there is insufficient refinery fuel gas available, natural gas is purchased and added to the LPFG system. An average of about 9 mmscfd of purchased natural gas is used for the LPFG system. Most of the purchased natural gas is used during the cool winter months and very little is used during the warm summer months.

If excess LPFG is produced, it is sent to the Flare Gas Header. This situation is referred to as being "long on fuel gas" and typically occurs during the warm summer months and when fuel gas consumers (e.g., furnaces, boilers, gas turbines, and COGEN) are out of service. On average, about 0.1 mmscfd of LPFG is sent back to the Flare Gas Header. Flaring can result if too much LPFG is sent back to the Flare Gas Header. To minimize the frequency and magnitude of flaring when the refinery is long on fuel gas, the use of purchased natural gas is minimized and a variety of efforts are made (such as unit adjustments and production cuts) to minimize the production of the various sources of refinery fuel gas. These flare minimization efforts are discussed in more detail in subsequent sections of this FMP.

2.4.3.4 COGEN Fuel System

An average of about 10 mmscfd of fuel gas at about 60 psig (further compressed at the COGEN) is supplied to the COGEN to fuel both the gas turbine and heat recovery steam generator (with auxiliary firing). The fuel sent to the COGEN is comprised of refinery fuel gas that has been scrubbed in T-1201. Additionally, purchased natural gas is sent to COGEN. Both fuels must be precisely blended to ensure compliance with strict BAAQMD emission limits. On average, the total fuel sent to COGEN is about 7 mmscfd of refinery fuel gas and 3 mmscfd of purchased natural gas.

2.4.3.5 Pilot Gas System

The pilot gas system supplies fuel to pilots throughout the refinery including boilers, furnaces, and the flares. On average, less than 1 mmscfd of fuel gas at about 30 psig is needed for the pilot gas system. Typically, purchased natural gas is used to supply the pilot gas system. However, refinery fuel gas that is scrubbed in T-1201 and compressed at C-2201 A/B, Stage 1 can also be used to supply pilot gas system.

2.4.3.6 HPTG System

The HPTG system is used to recycle hydrogen-rich streams from hydrofiners and the HCU back to the H2U as a feedstock to efficiently produce hydrogen. The HPTG system scrubs and compresses tail gas streams containing approximately 75 percent hydrogen to produce treated HPTG for the H2U. This system produces an average of about 23 mmscfd of HPTG. The HPTG system utilizes two treatment scrubbers (T-1202 and T-2201) that are similar in design and operation to T-1201. Feed streams to the HPTG system include both high and low pressure sour tail gas.

A reciprocating compressor (C-2201 A/B, Stage 2) is used to compress the LPTG after scrubbing. The volume of HPTG sent to H2U reduces the amount of natural gas required to manufacture hydrogen.

When the supply of HPTG is greater than can be recycled to the H2U, a portion of the gas must be sent to the LPFG system. On average, about 8 mmscfd of scrubbed HPTG from T-1202 is let down into the LPFG system.

2.4.4 Flare Water Seal Drums, D-2105 and D-2112

The Flare Gas Recovery System at the Benicia Refinery utilizes two flare water seal drums, one located at the South Flare (D-2105) and one located at the North Flare (D-2112). The flare water seal drums serve two primary purposes; (1) to create a water seal for the Flare Gas Header which prevents gases from flowing to the flares during normal operating conditions and (2) to minimize the carryover of hydrocarbon liquid into the flares in the event that gases are sent to the flares. Liquids from the flare water seal drums are pumped to the sour water tank (TK-2801).

The South Flare water seal drum is equipped with 1-inch notched internal overflow weir to maintain a constant level for the water seal equal to the weir height. At the North Flare water seal drum, a constant water level is maintained using a 6-inch drain line that sends flow around an internal wall. The Flare Gas Header enters through the top of each flare water seal drum and extends into the water. The submerged end of the Flare Gas Header creates a positive barrier or “water seal” that prevents gases in the header from reaching the flare under normal operating conditions. To maintain a water seal, water is continuously supplied to the flare water seal drums. The water flow rate is controlled by restriction orifices. Stripped sour water is the primary water source with fire water used as a backup supply. The fire water backup is activated by a low pressure controller. Steam is also provided to D-2105 and D-2112 to keep the liquid warm.

Each flare water seal drum is equipped with a 24-inch diameter horizontal “H” sparger with approximately 8,000 ½-inch holes that allow for uniform distribution of gases beneath the water. Additionally, each flare water seal drum is equipped with an 8-inch diameter auxiliary sparger also with ½-inch holes. The auxiliary sparger in the North Flare water seal drum is normally closed. Table 2-2 provides the water seal heights for each flare water seal drum. If the pressure in the Flare Gas Header rises above normal operating conditions, the 16-inch water seal in the South Flare water seal drum will be the first to “break” and gases will be sent to the South Flare. If the header pressure is great enough to break “H” sparger water seals, then gases will be sent to both the South and North Flares.

Table 2-2 – Flare Water Seals

Flare Water Seal Drum	Water Seal, inches	
	"H" Sparger	Auxiliary Sparger
South (D-2105)	31	16
North (D-2112)	27	Sparger normally closed[1]

[1]If the sparger is opened, the water seal would be 13 inches.

For both the South and North Flares, two 36-inch diameter lines connect the head space of each flare water seal drum to its respective flare.

Detailed piping and instrumentation diagrams that include the flare water seal drums (Drawing Nos. 136-KE-7 and 136-KE-8 for the South and North Flares, respectively) are provided in Appendix C.

2.4.5 Flares, South and North

The South and North Flares (including their associated water seal drums) were installed in 1969 and 1975, respectively. Both the South and North Flare stacks consist of 48-inch diameter pipes which are 345 feet tall (the flare tips are 10 feet, so the total flare height is 355 feet). Two 36-inch diameter lines connect each flare water seal drum to its flare stack. Gases are burned at the flare tips which are a smokeless, steam-assisted design by John Zink. The design capacity of the South and North Flares is 1.2 million lb/hr each.

To maintain smokeless combustion, steam is passed through eductor jets to aspirate air into the base of the flame. Additionally, at each flare, steam can be sent to external jets on the corona of the flare tip to help control the flame shape and cool the tip. At each flare, approximately 70,000 lb/hr of stream at a pressure of 125 psig can be supplied to the flare eductors and external jets. During flare events, flare operators adjust the steam rate from the Refinery Control Center to promote cleaner burning (smokeless) operation. Video monitors in the Refinery Control Center allow operators to observe flame characteristics and adjust steam rates accordingly. Smokeless combustion can be maintained at gas flow rates of about 100,000 to 140,000 lb/hr to each flare tip.

Each flare is equipped with four pilots that burn constantly to ignite any sudden release of gas to the flares. A constant supply of about 1.4 MMBtu/hr of pilot gas (refinery fuel gas and/or natural gas) is maintained at each flare. Temperature sensors at each pilot check for continuous operations. If there is a pilot failure, a trouble alarm is sounded at the Refinery Control Center and the pilots are ignited from the ground by a flame propagation system.

Beginning March 23, 2016 purge gas (natural gas) was introduced to the North Flare and was optimized on March 25, 2016 at an ongoing rate of 0.13 mmscfd. The purge rate was calculated using industry standard to obtain 6-8% oxygen or less within 25 feet from the flare tip. An existing natural gas line does not exist near the base of the south flare stack. Until a natural gas purge on the south flare system can be installed, the oxygen concentration is monitored. If above 4% O2 the DCS alarms and a nitrogen purge is

turned on to reduce the oxygen concentration. A long term project is being considered and scoped to install natural gas purges in the north and south flare seal drums above the liquid level so that all space downstream of the liquid seal is purged.

Detailed piping and instrumentation diagrams that include the South and North Flares (Drawing Nos. 136-KE-7 and 136-KE-8 for the South and North Flares, respectively) are provided in Appendix C. A detailed process and instrumentation diagram that includes the flare pilot igniter for the South Flare (Drawing No. 136-KD-7C) is provided in Appendix C. The flare pilot igniter for the North Flare is shown on the North Flare piping and instrumentation diagram listed above (Drawing No. 136-KE-8).

2.5 Acid Gas Flare System

The Benicia Refinery operates an Acid Gas Flare which was installed in 1969 when the refinery was constructed. The Acid Gas Flare is designed to ensure effective destruction of primarily hydrogen sulfide and ammonia in relief vents that come from potentially sulfur containing streams located in the SGU. These vent streams from the SGU contain little or no hydrocarbons. These gas sources are not continuous and only rarely require venting. The last reportable event greater than 500 lbs SO2 occurred December 8, 2011. There have been no reportable events greater than 0.5 mmscfd since flare monitoring was implemented under Regulation 12-11. The Acid Gas Flare presents two advantages by segregating higher sulfur gases from other recovered fuel gases – first, the higher sulfur sources can cause significant corrosion and require special materials of construction, and second, by segregating these sources any events that occur with high sulfur streams can be immediately recognized and addressed.

The major components of the Acid Gas Flare system include the SGU liquid KO drum, acid gas flare line, Acid Gas Flare water seal drum, liquid accumulator drum, and Acid Gas Flare. The Acid Gas Flare system does not use a compressor to recover acid gas because the flows are infrequent, of a low volume, and of high sulfur content that is not a good candidate for reuse as fuel gas. A detailed process flow diagram of the Acid Gas Flare (Drawing No. 36-000-03E-73504) is provided in Appendix B.

2.5.1 SGU Liquid KO Drum, D-2107 and Acid Gas Flare Line

The SGU relief system is routed to a liquid KO drum (D-2107) located at the SGU. Acid gas from D-2107 is sent via the acid gas flare line to the Acid Gas Flare water seal drum and then to the Acid Gas Flare. The SGU liquid KO drum minimizes the chance of liquid carry over into the acid gas flare system. Liquid collected in the D-2107 is pumped via enclosed piping to the sour water tank, TK-2801.

The acid gas flare line is a 16-inch diameter line originating at the SGU liquid KO drum and terminating at the Acid Gas Flare water seal drum located near the Acid Gas Flare. There is an additional tie-in to the Acid Gas Flare line that is not routed through the SGU liquid KO drum. This tie-in is used to route HPTG from the PS and VLE to the Acid Gas Flare during emergency events.

A detailed piping and instrumentation diagram of the SGU Liquid KO Drum (Drawing No. 117-KE-4B) is provided in Appendix C.

2.5.2 Acid Gas Flare Water Seal Drum, D-2106 & Liquid Accumulator Drum, D-2108

The Acid Gas Flare System utilizes a water seal drum (D-2106) that serves two primary purposes: (1) to create a water seal for the acid gas header which prevents gases from flowing to the flare during normal operating conditions, and (2) to minimize the carryover of hydrocarbon liquid into the flare in the event that gases are sent to the flare. Acid gas from D-2106 is sent to the acid gas flare. Liquids from D-2106 flow by gravity to the liquid accumulator drum (D-2808) where it is pumped to the sour water tank (TK-2801).

The Acid Gas Flare line enters through the top of the water seal drum and extends vertically into the water (dip leg) creating a 16-inch diameter opening about 6 inches below the water surface. The submerged end of the Acid Gas Flare line creates a positive barrier or “water seal” that prevents gases in the header from reaching the Acid Gas Flare under normal operating conditions. The height of the water seal is established using a drain line that creates an approximate 6-inch water level above the acid gas dip leg opening. To maintain a water seal, water is continuously supplied to the water seal drum. The water inlet flow rate is controlled by a restriction orifice. Stripped sour water is the primary water source with fire water used as a backup supply. The fire water backup is activated by a low pressure controller. Steam is also provided to D-2106 to keep the liquid warm.

A single 16-inch diameter line connects the head space of the Acid Gas Flare water seal drum to the Acid Gas Flare.

Overflow liquids from the Acid Gas Flare seal drum (D-2106) flow by gravity to the liquid accumulator drum (D-2108) from which they are pumped to the sour water tank (TK-2801). A balance line from the top of D-2106 is connected to the top of D-2108 to equalize pressure in the two drums. A level controller at D-2108 activates the pump to the sour water tank (TK-2801).

A detailed piping and instrumentation diagram that includes the Acid Gas Flare water seal drum and liquid accumulator drum (Drawing No. 136-KE-7) is provided in Appendix C.

2.5.3 Acid Gas Flare

The Acid Gas Flare tip is located adjacent to the South Flare tip on the South Flare stack. A 16-inch diameter line connects the water seal drum to the Acid Gas Flare. Gases are burned at the flare tips which are a smokeless, steam-assisted design by John Zink. The design capacity of the Acid Gas Flare is 79,000 lb/hr including both purge gas and combustion assist gas. Steam is utilized at the Acid Gas Flare tip to minimize flare pluming. During flaring events, the steam rate is automatically adjusted to maintain a specific acid gas to steam ratio. Video monitors in the Refinery Control Center allow operators to observe flame characteristics.

The Acid Gas Flare is equipped with three pilots that burn constantly to ignite any sudden releases of gases to the flares. A constant supply of about 0.35 MMBtu/hr of pilot gas (refinery fuel gas and/or natural gas) is maintained at the flare. Temperature sensors at

each pilot check for continuous operations. If there is a pilot failure, a trouble alarm is sounded at the Refinery Control Center and the pilots are ignited from the ground by a flame propagation system.

Combustion assist gas (fuel gas) is typically added to the acid gas (at the acid gas water seal drum) at a rate of up to about 3.1 mmscfd to improve flare combustion during a flaring event. The addition of combustion assist gas is controlled by computer program to add fuel gas when a release is detected, either by the flow meter or if indicated by the valve position of sources routed to the flare. Additionally, the Acid Gas Flare utilizes a continuous flow purge gas from the pilot gas system (which is normally natural gas) to mitigate pulsation in the flare. A constant supply of about 0.05 mmscfd of purge gas is added to the 16-inch diameter line that connects the water seal drum (D-2106) to the Acid Gas Flare.

A detailed piping and instrumentation diagram that includes the Acid Gas Flare (Drawing No. 136-KE-7) is provided in Appendix C. A detailed piping and instrumentation diagram that includes the flare pilot igniter for the Acid Gas Flare (Drawing No. 136-KD-7C) is provided in Appendix C.

2.6 Monitoring Equipment

The Benicia Refinery operates flare monitoring and control equipment to ensure proper operation of the flare systems. This section provides detailed information regarding the various monitoring and control equipment.

2.6.1 Flare Volumetric Flow Rate Monitoring

In accordance with Regulation 12-11-501, the Benicia Refinery installed Panametrics ultrasonic volumetric flow meters in November 2003 at the South, North, and Acid Gas Flares. For the South and North Flares, the flow meters are installed in the 42-inch diameter (41.5--inch ID) Flare Gas Header approximately 50 and 450 feet upstream of the South and North Flare water seal drums, respectively. The South and North flow meters have a range of about 0.08 to 223 mmscfd (0.1 – 275 ft/s). For the Acid Gas Flare, the flow meter is installed in the 16-inch diameter (15.25--inch ID) Acid Gas Flare line approximately 50 feet upstream of the Acid Gas Flare water seal drum. The acid gas flow meter has a range of about 0.011 to 30 mmscfd (0.1 – 275 ft/s). Each flow meter meets the following specifications:

- The minimum detectable velocity is 0.1 foot per second;
- Continuously measures the range of flow rates corresponding to velocities from 0.1 to 275 feet per second in the header;
- Manufacture's specified accuracy of +/-5 percent over the range of 1 to 275 feet per second;
- Each meter is installed where the measured volumetric flow is representative of flow to the flare it monitors;
- Access is provided for the BAAQMD to verify proper installation and operation; and

- Each meter is maintained to be accurate to within +/- 20 percent as demonstrated by flow verification conducted every 6 months in accordance with Regulation 12-11-402.

Volumetric flow rate data for the flares are continuously recorded in the refinery's data historian. The data historian tag numbers for the volumetric flow rate (raw data) from South, North, and Acid Gas Flares are 21F252, 21F253, and 21F254, respectively.

The raw flow data for the South and North Flares are "validated" based on the Flare Gas Header pressure. When the header pressure is below the level needed to break the water seal in the respective seal drum, it is assumed that there is no flow to the South or North Flares. This "validation" is needed because under "no-flow" conditions, the meters often record a small flow rate due to noise. The data historian tag numbers for the "validated" data are 21F252A, 21F253A for the South and North Flares, respectively. The data historian tag number for the Flare Gas Header Pressure is 21P035.

Under normal operations for the South Flare, the auxiliary sparger is un-blocked and the raw flow values are corrected to zero flow when the header pressure is less than 12 inches of water column (16 inches of water column is needed to break the water seal as shown in Table 2-2). However, if the auxiliary sparger is blocked-in at the South Flare, the raw flow values are corrected to zero flow if the header pressure is less than 24 inches of water column (31 inches of water column is needed to break the water seal as shown in Table 2-2).

Under normal operations for the North Flare, the auxiliary sparger is blocked-in and the raw flow values are corrected to zero flow when the header pressure is less than 24 inches of water column (27 inches of water column is needed to break the water seal, as shown in Table 2-2). However, if the auxiliary sparger is un-blocked at the North Flare, the raw flow values are corrected to zero flow if the header pressure is less than 12 inches of water column (13 inches of water column is needed to break the water seal, as shown in Table 2-2).

The raw flow data for the Acid Gas Flare is "verified" by determining if the water seal was broken. If D-2106 differential pressure (dP) is less than the water seal head pressure, then the water seal is intact and there is no flow to the flare. Conversely, if D-2106 dP is greater than the water seal head pressure, then the water seal is broken and there is flow to the flare. The data historian tag number for D-2106 is UBP069 and the water seal is CVUBL013.

Detailed piping and instrumentation diagrams of the ultrasonic flow meters (Drawing Nos. 131-KE-19D, 131-KE-19E, and 131-KE-21B) are provided in Appendix C.

2.6.2 Pilot and Purge Gas Flowrate

In accordance with Regulation 12-11-504, the volumetric flow rate of pilot and purge gases must be (1) continuously monitored or (2) other information must be monitored so that it may be used to calculate the flow rate. The volumetric flow rate of pilot gas sent to the South, North, and Acid Gas Flares can be calculated based on continuous pressure monitoring and design information for nozzle size at the flare tip.

The North Flare purge gas (natural gas) volumetric flow rate is based on a restriction orifice diameter size. The South Flare purge gas (nitrogen) flowrate is based on a union orifice diameter size. For the Acid Gas Flare, a local flowmeter, 21F251, provides flow indication of the purge gas (natural gas). The volumetric flow rate of supplemental gas (refinery fuel gas) to the Acid Gas Flare is continuously monitored and recorded with flow meter 21F034. Pilot Monitoring

In accordance with Regulation 12-11-503, the South, North, and Acid Gas Flares are each equipped with a continuous burning pilot. The presence of a flame is continuously monitored with temperature monitors including 21T059 through 21T064 at the South Flare, 21T055 through 21T058 at the North Flare, and 21T065 through 21T068 at the Acid Gas Flare.

2.6.3 Flare Video Monitoring

The South, North, and Acid Gas Flares are video monitored in accordance with Regulation 12-11-507. A real-time digital image of each flare and flame are maintained with a frame rate of at least 1 frame per minute. The recorded image of the flare and flame are of sufficient size, contrast, and resolution to be readily apparent in the overall image. The image includes an embedded date and time stamp.

2.6.4 Flare Seal Drum Monitoring

In accordance with Regulation 12-12-501, water seal integrity monitors were installed prior to August 1, 2006 at the seal drums for the South, North and Acid Gas Flares (D-2105, D-2112, and D-2106). For each water seal drum, these instruments continuously monitor the water level and the water seal (pressure differential between the flare header and seal drum). Tables 2-3 and 2-4 provide specifications for the flare seal drum monitors.

Table 2-3 – Flare Seal Drum Level Monitors

Flare & Seal Drum	Level Monitor	Range (inches)	Location of 0 inches
South Flare, D-2105	21L014	0 to 56	2” below top of “H” sparger
North Flare, D-2112	21L015	0 to 46	2” above top of “H” sparger
Acid Gas Flare, D-2106	21L013	0 to 33	10” below dip leg opening

Table 2-4 – Water Seal Monitors

Flare & Seal Drum	Level Monitor	Range (inches of water)
South Flare, D-2105	21P070	0 to 50
North Flare, D-2112	21P071	0 to 50
Acid Gas Flare, D-2106	21P069	0 to 10

(1)Pressure differential between the flare header and the seal drum.

2.6.5 Flare Gas Composition Monitoring

In accordance with Regulation 12-11-502, the Benicia Refinery monitors the composition of any gases that result in a reportable flaring event and provides compositional information to the BAAQMD when reports are submitted. Flaring events are defined as continuous events sensed by the Panametric flare flow meters in excess of 330 scfm (0.475 mmscfd) for 15 continuous minutes or longer. Regulation 12-11-502.3.1.a requires that a sample be taken within 15 minutes of the start of a flaring event, and at three hour intervals during a flaring event.

In November 2015, the Benicia Refinery installed Siemens Maxum II Process Graph Chromatographs (GC) downstream of the North and South flare water seal drums for measurement of 0-300 ppm H2S pursuant to 40CFR60.107a(a)(2). Starting in 2016 these GCs also measure BTU components in accordance with BAAQMD Rule 12-11-502.3.4 and replace the automatic flare sampling used pre-2016.

BAAQMD Rule 12-11-601.3 requires GC analysis to meet ASTM Method D1945-96 or any alternative method if approved by the APCO and EPA. The Siemens Maxum II Process GC is applied in all sectors of the petrochemical industry and uses a molecular sieve and packed columns in two ovens. The left oven performs a backflush at 121°C and the right oven separates components at 80°C. This method is similar, but not exact, to the method described in ASTM D1945-96. The primary reason for the difference in methods is that ASTM D1945-96 is a lab method for analysis of natural gas whereas the Siemens analyzer uses methodology appropriate for process GC analyzer measurements and the components of flare gas.

In November 2015 the Benicia Refinery is also installed ThermoFisher Scientific SOLA II Flare Total Sulfur analyzers downstream of the North and South flare water seal drums, ranged from 0-5000 ppm and 0-50%. These analyzers are now used for SO2 emissions reporting required by Regulation 12-11-502.3.3 and replace the automatic flare sampling. Changing from 3-hour H2S flare gas sampling pre-2016 to continuous, online total sulfur analysis post-2016 may cause a step change in the SO2 emissions reported for similar flaring events.

Table 2-5 – Flare Analyzers

Flare	H2S/BTU Analyzer	Total Sulfur Analyzer
South	21A301/21A302	21A320
North	21A341/21A342	21A360

Sampling is not conducted at the Acid Gas Flare to determine composition. In accordance with Regulation 12-11-502.3.1.a, composition data representing worst-case conditions has been provided to the BAAQMD.

Detailed process and instrumentation diagrams (P&ID) of the automatic flare sampling system (Drawing Nos. 131-KE-19, 136-KD-7A, and 136-KD-7B) are provided in Appendix C. PI&D revisions for the new flare analyzers are currently in progress and new P&IDs will be submitted with the next FMP update.

2.6.6 Flare Gas Compressor Monitoring

Flare Gas Compressor C-2101 A suction is monitored by temperature (21T007) and pressure (21P018), which are located on the overhead of D-2114 suction KO drum. Compressor discharge is monitored by temperature (21T018), pressure (21P022), and flow (21F026), which are located on the overhead of the D-2117 3rd stage KO drum. An O_2 analyzer (21A002) for monitoring the O_2 content of recovered flare gas is located on the overhead of D-2115 1st stage discharge KO drum.

Flare Gas Compressor C-2101 B suction is monitored by temperature (21T034) and pressure (21P036), which are located on the overhead of D-2119 suction KO drum. Compressor discharge is monitored by temperature (21T029), pressure (21P040), and flow (21F226), which are located on the overhead of the D-2121 2nd stage KO drum. An O2 analyzer (21A004) for monitoring the O2 content of recovered flare gas is located on the overhead of D-2120 1st stage discharge KO drum.

Suction pressure (Flare Gas Header pressure) of each compressor is controlled by adjusting recycle flow. Compressor loading (0, 25, 50, 75 and 100 percent steps) in turn is adjusted to maintain the recycle valve in controllable range.

Both compressors are equipped with independent instrumentation on the suction, discharge, and inter-stages, to trip the compressors if certain operating parameters are exceeded. Compressor trip set points are discussed in Section 2.4.2 and summarized in Table 1-1.

Detailed piping and instrumentation diagrams that include instrumentation for monitoring the Flare Gas Compressor operation (Drawings Nos. 36-000-03E-03537 and 36-000-03E-09061 for C-2101 A; Drawing Nos. 36-000-03E-09060 and 36-000-03E-09061 for C-2101 B) are provided in Appendix C.

3. Flaring Reductions Previously Realized

In accordance with Regulation 12-12-401.2, this section of the FMP provides detailed descriptions of the equipment, processes, and procedures installed or implemented within the last five years to minimize the frequency and magnitude of flaring events at the Benicia Refinery. Because flare minimization activities started about 40 years ago at the Benicia Refinery, this section also includes some of the more important measures that have been implemented prior to the most recent five year period.

Table 3-1 provides an approximate chronological listing of flare minimization measures implemented at the Benicia Refinery for the South, North, and/or Acid Gas Flares. For each measure, the year of installation or implementation is provided if a precise date is known. Otherwise, a general time period is provided. Additionally, the effectiveness of these measures in minimizing the frequency and magnitude of flaring events at the Benicia Refinery is qualitatively shown as "significant," "moderate," or "minor."

Table 3-1 – Flaring Reductions Previously Realized

Year Installed/ Implemented	Equipment Added, Process Changed, or Procedure Implemented	Minimization of Flaring
1975/76 to present	Equipment clearing procedures during shutdown prior to conducting maintenance activities are discussed in Section 4.1.1.	Significant
1975	Installed Fuel Gas Compressors (C-2201 A/B) and modified the Fuel Gas Unit to significantly reduce the refinery's use of purchased natural gas. As a result of this project, compression of low pressure fuel gas (LPFG) with the Stage 1 compressors is used to fuel the gas turbines. Additionally, the Stage 2 compressors are used for compression of low pressure tail gas (LPTG) which is used to feed the H2U. Prior to the installation of the Compressors, tail gas was let down to LPFG, which loaded up the LPFG system and caused flaring.	Significant
1975	Installed a Coker Gas Compressor (C-902) to reduce the volume of Coker Gas sent to the Cat Gas Compressor (C-701). This unloading of C-701 reduced the quantity of FCCU and Coker Gas sent to the Flare Gas Header and downstream flares (the Flare Gas Compressors had not yet been installed).	Significant
1976	Installed the first Flare Gas Compressor (C-2101 A) to provide recovery capacity of up to 6 mmscfd of flared gases. Prior to installation of this compressor, all gases sent to the Flare Gas Header were flared.	Significant

Year Installed/ Implemented	Equipment Added, Process Changed, or Procedure Implemented	Minimization of Flaring
1983	Installed the second Flare Gas Compressor to provide a spare compressor of the same capacity as the first recovery compressor. This spare compressor reduces flaring during compressor maintenance and unplanned compressor shutdown due to equipment failure or malfunction. Additionally, during high loading of the Flare Gas Header it is possible to operate both compressors in parallel and recover additional flare gas to the Fuel Gas Unit.	Significant
1984	VNHF eductor system was added to allow for recycled use of H_2 at H2U. This unloads the lower H_2 grids and reduces quantity of H_2 sent to LPFG, thus reducing the potential for flaring because of a fuel gas imbalance.	Moderate
1984 to present	Created the first LPFG pressure computer control application that was designed to minimize letdown of LPFG to flare. The program optimizes auxiliary components (propane and butane) in the LPFG system in a proactive manner to back off on the combustion of auxiliary fuels as a preventative measure to minimize flaring of excess fuel gases. By automating the management of these gases, the balance is always being monitored and more effectively managed than could be achieved by operations personnel in a manual approach.	Significant
1984	HCU off gas from D-403 was rerouted from the suction of the Fuel Gas Compressors (C-2201 A/B) to the high pressure discharge to provide more compressor capacity. This modification has served to unload Stage 2 of the C-2201 A/B compressors and results in less flow from T-1202 to LPFG, thus reducing the potential for flaring because of a fuel gas imbalance.	Moderate
1987	The H2U 2nd and 3rd stage oily condensate system blowdown was recovered back to the compressor suction. This project provides for the recovery of H_2 instead of being vented to the Flare Gas Header.	Moderate

Year Installed/ Implemented	Equipment Added, Process Changed, or Procedure Implemented	Minimization of Flaring
Late 80's	Installed a second electrical power feed from PG&E, the local utility provider. This second feed decreases the likelihood of power outages which typically result in significant flaring.	Significant
Late 80's to present	Revised the H_2 grid pressure control programs to stabilize low pressure H_2 grid pressure and reduce loss of H_2 to LPFG. The H_2 grid is separate from the Fuel Gas Unit, and supplies H_2 to the hydrofiners and the HCU. The H_2 grid has several cascading pressure levels whereby H_2 from one unit is re-used in another unit at a lower pressure level. The lowest pressure H_2 grid typically lets down some H_2 to the tail gas system for control, but excess H_2 may also be let down to LPFG. The H_2 grid pressure control program adjusts H_2 production to reduce H_2 letdown to LPFG, thus reducing the potential for flaring because of a fuel gas imbalance	Significant
Late 80's to present	Unit Flare Check Sheets were developed, implemented, and are periodically reviewed and updated. These check sheets are used by operators when the base-load to the Flare Gas Header is above its normal operating level. Use of these check sheets provides for a systematic search of potential gas streams that should not be flowing to the Flare Gas Header. During normal refinery operations, a reduction in flow to the Flare Gas Header does not reduce flaring because these gases are recovered during normal refinery operations. However, reducing or minimizing routine flows to the Flare Gas Header can reduce the quantity of flaring during a flaring event caused by maintenance activities, fuel gas imbalance, or an emergency event.	Minor

Year Installed/ Implemented	Equipment Added, Process Changed, or Procedure Implemented	Minimization of Flaring
Late 80's to present	Conducted routine maintenance of pressure relief devices (PRD's) connected to the Flare Gas Header, consistent with API 510, this routine maintenance of PRD's can reduce leakage from PRD's to the Flare Gas Header and marginally reduce the base-load flow to the Flare Gas Header. During normal refinery operations, a reduction in flow to the Flare Gas Header does not reduce flaring because these gases are recovered during normal refinery operations. However, reducing or minimizing routine flows to the Flare Gas Header can reduce the quantity of flaring during a flaring event caused by maintenance activities, fuel gas imbalance, or an emergency event. API 510 is an industry inspection code for pressure vessels which is now part of the California Safety Orders. Safety valves protect vessels from overpressuring. The safety valves must be tested and repaired per API 510 at sufficient intervals to maintain the relief equipment in safe operating condition. The intervals between relief equipment inspections are determined by experience in the particular service. Inspection intervals for safety valves are typically in the range of 24-36 months, but may be increased to a maximum of 10 years.	Minor
Late 80's to present	Liquid phase and vapor phase chemical cleaning during shutdown prior to maintenance activities are discussed in Section 4.1.1.	Moderate
Late 80's to present	Utilized "Ni-Cool" to reduce the time required to cool down reactors for maintenance. A cooler gas stream requires less time to cool down a reactor at a constant flow rate. "Ni-Cool" injects sub-cooled liquid nitrogen into a gas stream, such as nitrogen or hydrogen. As liquid nitrogen vaporizes into the gas stream, the gas is cooled, thereby reducing the time required to cool the reactor, resulting in less purge gas sent to the Flare Gas Header and less flaring.	Moderate

Year Installed/ Implemented	Equipment Added, Process Changed, or Procedure Implemented	Minimization of Flaring
Early 90's to present	Numerous comprehensive projects and improvements were implemented to allow longer runs between turnarounds. Most refinery projects include an element of improved reliability which increases run length. Examples of reliability improvement projects include upgraded metallurgy, improved designs, and equipment replacements. Shutdown and startup associated with turnarounds generate significant quantities of gas that result in flaring. Increased run length between maintenance turnarounds results in less frequent flaring events from unit shutdowns and startups.	Significant
1991	Developed an online computer tool (TDC Schematic 89) that displays on a single screen real-time operating data associated with flaring. This allows operators to quickly understand and troubleshoot flaring issues.	Moderate
~1992	Initiated procedures to balance flare loading during upsets/emergencies by equalizing South and North Flares to minimize excessive flaring and smoking at the South Flare. Flare balancing does not minimize the total quantity of flaring but does reduce emissions by improving flare performance during upsets/emergencies.	Minor
Mid 90's	Updated operating procedures to minimize flaring during loss of either the Coker Gas Compressor (C-902) or Cat Gas Compressor (C-701). Loss of either compressor results in significant flaring. The FCCU and CKR feed rates are reduced and the remaining compressor is used to fullest extent possible.	Significant

Year Installed/ Implemented	Equipment Added, Process Changed, or Procedure Implemented	Minimization of Flaring
90's to present	Initiated proactive operating procedures to minimize the frequency and magnitude of flaring when it can reasonably be anticipated. Proactive procedures represent a change in operating philosophy and a general awareness, not a set of specific procedure changes. Prior to this time, the refinery's approach to minimizing flaring events was reactionary in nature (e.g., try to minimize flaring after it occurred). However, the procedures initiated at this time focus on approaches to minimizing flaring before these events occurred. Increased operator awareness and attention to flare minimization is a significant cultural change and an important management expectation.	Moderate
90's to present	Upgraded condensers to improve performance during hot weather periods. This improved performance reduces production of fuel gas and decrease the likelihood of a fuel gas imbalance during hot weather periods. Examples of upgraded condensers include redesigned exchangers and additional surface area. Increased condenser capacity further cools the vapor stream and recovers additional light hydrocarbons, such as propane and butane, which would otherwise load up the Fuel Gas Unit and potentially cause flaring. Condenser upgrades have been implemented throughout the refinery, particularly in light hydrocarbon processing units such as VLE, CLE, and ALKY.	Significant
1995	Developed programs that monitor flows to the Acid Gas Flare system. Alarms built to warn of impending flaring and action required.	Minor
1996	Installed automatic trip valves (on steam to reboilers) to towers (T-1061 and T-1064) at ALKY to eliminate flare load during tower upset by tripping heat source (steam) on high tower pressure.	Moderate
1996	Installed automatic trip valve (on steam to reboiler) added to a tower (T-4302) at MTBE (now part of ALKY) to eliminate flare load during tower upset by tripping heat source (steam) on high tower pressure.	Moderate

Year Installed/ Implemented	Equipment Added, Process Changed, or Procedure Implemented	Minimization of Flaring
Mid to late 90's	Upgraded cooling water supply system for Cat Gas Compressor by providing cooling water booster pump. With this pumping configuration, condensing capacity was upgraded (E-707's) and interstage coolers (E-710's) on the Cat Gas Compressor were made more effective. These actions increased the capacity for condensing and recovering materials as liquids and reduced gas flows to the Flare Gas Header.	Moderate
1999 to present	Starting with the 1999 refinery-wide turnaround, a much higher emphasis was required for individual unit Process Coordinators of a major turnaround to minimize flaring by improving unit shutdown and startup procedures, scheduling, and flare balance. Additionally a Refinery Coordinator position was created for major turnarounds to work out plans to stagger unit shutdowns and startups to minimize flaring. Flaring was significantly reduced during the 1999 refinery-wide turnaround, and was then again significantly reduced during the 2004 refinery-wide turnaround by: 1) revising shutdown and startup procedures to minimize flaring from each process unit; and 2) improving the sequence of shutdowns and startups of all process units to reduce flaring to the extent practicable. Sequencing unit shutdowns and startups reduces the volume of gas flared at any time and increases recovery of flare gas. Figure 1 of the Executive Summary shows that flaring during the 2004 refinery-wide turnaround year was about half of what it was during the 1999 refinery-wide turnaround year. Turnaround length is typically set by available product coverage through exchanges and trades from alternate suppliers, and expected maintenance workload on major process units such as the PS, FCCU, and CKR. The shutdown and startup sequences are typically set by process and safety considerations. For example, during a Refinery-wide turnaround, the FCCU is shutdown after and started up before the CKR, in order for CKR gas to be processed in CLE rather than flared.	Significant

Year Installed/ Implemented	Equipment Added, Process Changed, or Procedure Implemented	Minimization of Flaring
1999	Upgraded the Cat Gas Compressor (C-701) control systems to a Triconex system which greatly increases reliability. The improved reliability of C-701 reduces the potential for unplanned shutdown of C-701 that result in significant flaring from the FCCU.	Significant
Late 90's to present	Both proactive and reactive operating procedures are identified in a Fuel Gas Seriatim to address flaring that may occur because of fuel gas imbalance during hot weather. The FCCU and CKR typically produce about 70 percent of the refinery's fuel gas. Therefore, the Fuel Gas Seriatim focuses on unit adjustments and production cuts at the FCCU and CKR because changes at these units have the greatest potential to minimizing or eliminate flaring by preventing a fuel gas imbalance. The Fuel Gas Seriatim, which is regularly updated, includes a sequenced list of operating procedures. These procedures generally include cutting feed rates to the FCCU and/or CKR, cutting reaction temperature at the FCCU, and cutting makeup fuels to the Fuel Gas Unit. The sequence of steps taken to cut unit production may change, depending upon operating conditions including the ability to cut feed rate further (unit turndown) and tank inventories. When hot weather is expected, the Fuel Gas Seriatim is typically implemented early in the day in a proactive effort to prevent a fuel gas imbalance before one occurs. During a fuel gas imbalance, flaring is needed because of excess fuel gas that is not needed at refinery furnaces, boilers, gas turbines, and COGEN. Therefore, the Fuel Gas Seriatim minimizes flaring by minimizing the potential for a fuel gas imbalance.	Significant
Late 90's to present	Utilized upfront planning to allow staged purging of equipment in the FCCU and CKR. Developed procedures which scheduled the purging of equipment in specific stages to ensure that the vapor load to the flare header is manageable for recovery of flare gas. In contrast, un-staged purging may result in simultaneous purging of equipment which increases the flare load and hence potential flaring.	Moderate

Year Installed/ Implemented	Equipment Added, Process Changed, or Procedure Implemented	Minimization of Flaring
Late 90's to present	Utilized procedures that enable unit startup with minimum flaring. For example, the FCCU and associated CLE is started up before the CKR to allow CKR gas to be processed in CLE rather than flaring it. Also, the FCCU and CKR wet gas compressors are commissioned during startup to route FCCU and CKR vapors to CLE rather than to the Flare Gas Header.	Moderate
2000 to present	Increased/improved preventive maintenance on the Flare Gas Compressors (C-2101 A/B), which has resulted in improved reliability and less downtime. Recent activities have included cleaning and/or replacement of demisters pads. On-stream time for the compressors is generally at or exceeding industry standards for this type of compressor in dirty gas service. In the past, less maintenance was performed on the Compressors during shutdowns in order to get the Compressors back in service as soon as possible. Now, enhanced preventative maintenance is performed on each compressor when it comes down for maintenance, resulting in improved service factors and less major maintenance required. Increased service factor allows the Compressor to remain on-line longer to recover flare gas.	Moderate
2000 to 2005	Monitoring points for flow rates and temperatures were added to flare systems and added to the online computer tool for flaring (TDC Schematic 89). These changes provided more information and help to quickly trouble-shoot flaring issues.	Minor
2000 to 2002	Added overhead pressure control valves to towers (T-803 and T-805) at CLE. With the control valves, tower pressure can be slowly reduced in a controlled fashion to the Flare Gas Header rather than manually opening an 8-inch block valve which quickly releases gas to the Flare Gas Header.	Minor

Year Installed/ Implemented	Equipment Added, Process Changed, or Procedure Implemented	Minimization of Flaring
2002	Installed COGEN plant which is a major fuel gas consumer, generates power, and produces steam for the refinery. The addition of the COGEN plant increased the refinery's usage of fuel gas, providing additional capacity for the reuse of recovered flare gases. The installation of COGEN significantly reduces the likelihood of a refinery fuel gas imbalance that results in flaring. The addition of the COGEN plant also provides a third source of electric power to the refinery which reduces the likelihood of power outages (there are two power feeds from the PG&E grid). Power outages result in very significant flaring because the entire refinery is simultaneously shutdown and all process gases must be flared. Additionally, restarting the refinery after power has been restored also causes flaring.	Significant
2002 to present	Operating procedures are identified in a Fuel Gas Seriatim to respond to a fuel gas imbalance caused by a trip at COGEN (sudden loss of a fuel gas consumer). The Fuel Gas Seriatim, which is regularly updated, includes a sequenced list of operating procedures to be implemented where practical and feasible. These procedures generally include cutting feed rates to the FCCU and/or CKR, cutting reaction temperature at the FCCU, and cutting makeup fuels to the Fuel Gas Unit. The sequence of steps taken to cut unit production may change, depending upon operating conditions, including the ability to cut feed rate further (unit turndown) and tank inventories. Flaring occurs when a trip at COGEN causes a fuel gas imbalance. Implementation of the Fuel Gas Seriatim is a reactionary step to restore fuel gas balance and stop flaring after it has occurred.	Moderate
2004	New Panametrics flow meters installed at South and North Flares. This allows better tracking of flare load and troubleshooting.	Minor

Year Installed/ Implemented	Equipment Added, Process Changed, or Procedure Implemented	Minimization of Flaring
2004	Rail Car Rack Vapor Recovery Project installed. Instrumentation controls were added to ratably control rail car loading and venting to the Flare Gas Recovery System, preventing flaring. The rate of depressuring rail cars to the flare header is controlled by monitoring flare header pressure to ensure the water seals at the flare drums are not broken, and all vapors in the flare header are recovered by the Flare Gas Compressors.	Moderate
2004	Rerouted Coker Gas from Coker Gas Compressor (C-902) to middle section of the CLE Absorber Deethanizer Tower (T-801). As a result, there was a reduction in the quantity of gas sent from CLE to the Fuel Gas Unit, thus reducing the potential for flaring because of a fuel gas imbalance.	Minor
2005	An automatic sampler was added to the flare system. This allows the refinery to better assess the flare gas quality consumed by the various fuel gas consumers, which helps minimizes flaring.	Minor
2006	Installed Pilot Operated Safety Valve on the CLE Heavy Cat Naphtha Steam Stripper Tower (T-807A) in order to raise tower operating pressure. When pressures are too high, this enables the tower overhead to be routed directly to the Fuel Gas Unit rather than to the Flare Gas Header, thus reducing load on the Flare Gas Compressors and the potential for flaring.	Minor
2006	Converted the cooling system for the Flare Gas Compressors (C-2101 A/B) from cooling water to glycol in 4Q2006. The objective of this project is to improve compressor reliability by converting the cooling system coolant to an independent, dedicated system that does not foul the compressor cooling system. Poor system cooling in the past has caused premature valve and piston problems, thus reducing the overall machine availability. This project will reduce the probability that both Flare Gas Compressors could be off-line at the same time, which would result in flaring.	Minor

Year Installed/ Implemented	Equipment Added, Process Changed, or Procedure Implemented	Minimization of Flaring
2006	Purchased portable ultrasonic flow monitoring equipment to be used together with the Unit Flare Check Sheets to troubleshoot leaking valves to the Flare Header when the base load increases. This equipment will reduce flaring by reducing the amount of time needed to identify leaking valves. Leaking valves adversely increase the base load to the Flare Gas Header and Flare Gas Compressor. In addition, the new flow detectors may be used in an evaluation to identify miscellaneous routine gas streams to the Flare Header. The new flow detectors must be placed directly on the valves to detect leakage.	Minor
2006	The following specific measures were implemented to minimize fuel gas production during the high ambient temperature conditions which resulted in flaring in June 2006. The seriatim was reevaluated and steps were added to it. Selected Mogas Reformulation Unit (MRU) pressure vessel target pressures were increased to improve hydrocarbon recovery. Additionally, some process unit targets were modified. These preventative measures will improve the effectiveness of the Fuel Gas Seriatim. Please refer to the discussions on the Fuel Gas Seriatim provided previously in this section under the implementation date: “Late 90’s to present” which had a significant flare minimization impact.	Minor
2006	The following specific measures were implemented to prevent reoccurrence of the failure of the ‘Coker Unit reactor level slide control valve’ during a routine performance check which resulted in flaring in August 2006. The preventative maintenance procedure for the routine control check on this valve was modified so that it is not fully closed during the control check. The revised procedure will minimize the potential for flaring by reducing the likelihood of the valve failing closed. Affected operating personnel were notified of the revised procedure.	Minor

Year Installed/ Implemented	Equipment Added, Process Changed, or Procedure Implemented	Minimization of Flaring
2006	The following specific measures were implemented to prevent reoccurrence of the failure of the make-up natural gas regulator which resulted in flaring in August 2006. The storage tank natural gas pressure regulator was temporarily closed and later repaired. The regulator performance is monitored as part of the tank compressor operations to ensure it is operating properly and not contributing flow to the fuel gas system. Piping line-ups were discussed and verified with on-shift personnel. These improvements will reduce the potential for flaring under the conditions that contributed to this flaring event.	Minor
2006	The following specific measures were implemented to prevent reoccurrence of the failure Refinery's Energy Isolation Procedure which resulted in flaring in October 2006. The Refinery's Energy Isolation Procedure was reviewed with the responsible technician and with the other operating personnel. The review ensures adherence to procedures that will minimize flaring.	Minor
2006	The following specific measures were implemented to prevent reoccurrence of the failure of the backup fuel gas recovery compressor solenoid valve which resulted in flaring in December 2006. In the event the backup fuel gas recovery compressor has a solenoid valve failure, a spare solenoid valve is maintained in storehouse stock. The on-site replacement spare enabled a timely replacement and restart of the back-up fuel gas recovery compressor. Automatic stock reorder points are established to ensure maximum availability for equipment repairs. Although vendor supply can affect delivery, Valero's system makes every attempt to restock in a manner that ensures spare availability and therefore increased reliability. These supply and reorder systems help minimize flaring by allowing back-up equipment to be available more quickly.	Minor

Year Installed/ Implemented	Equipment Added, Process Changed, or Procedure Implemented	Minimization of Flaring
2007	Valero had originally planned to implement Valve Alert software to monitor reciprocating compressors in the refinery. After multiple trials, a 3rd party compressor analysis contractor, T.F. Huggins was found to be better suited to Valero's needs for monitoring compressors in the refinery. Valero chose this system because it was a better resource for managing the 3rd party work, report archiving and overall program management. The new system will improve reliability of reciprocating compressors by tracking performance to determine when maintenance is needed. Improved performance tracking will allow maintenance schedules to be optimized and improve overall machine availability. This will reduce the probability that both Flare Gas Compressors could be off-line at the same time, which would result in flaring. Additionally, the system will be used for other reciprocating compressors which may help to minimize compressor failures that could result in process unit shutdowns and associated flaring.	Minor
2007	Valero's Process Engineering Department conducted a system evaluation to identify miscellaneous gas streams that are routinely routed to the Flare Gas Header and determine if these streams can be eliminated or re-routed directly to the Fuel Gas Unit. The objective of this evaluation was to identify potential opportunities to reduce the number and volume of routine gas streams to Flare Gas Header. Although no routine sources were identified, Valero will continue to analyze projects where opportunities may exist to reduce routine gas streams to the Flare Gas Header. If the base load to the Flare Gas Header is reduced, the base load on the Flare Gas Compressor will also be reduced. Thus, there will be more available capacity to capture and recover flare gas that might otherwise be flared due to emergencies and/or startup, shutdown, and maintenance activities.	Moderate

Year Installed/ Implemented	Equipment Added, Process Changed, or Procedure Implemented	Minimization of Flaring
2007	Pre-Turnaround Flare Minimization Planning. Implemented a planning process for turnarounds that incorporates a review of the procedures to develop opportunities for flare minimization. This planning and review process has been consistently applied to turnaround operations and resulted in lessons learned for improved flare minimization techniques. These flare minimization techniques have been successfully applied at subsequent turnarounds of similar units. For example, Valero has developed revised shutdown procedures for hydroprocessing units to safely recover some of the low Btu gasses that are generated. These procedures originally developed at a single unit have been transferred to other similar units. The flare minimization improvement cycle will continue as this planning program evolves.	Moderate
2007	The following specific measures were implemented to prevent reoccurrence of the PG&E connection and synchronization failures which resulted in flaring in January 2007. PG&E Installed an AC undervoltage relay to supervise the operation of the DC undervoltage relay. Both relays require activation before the Valero Refinery breakers are tripped. The AC undervoltage relays are independent from each other and do not have a common point of failure.	Moderate

Year Installed/ Implemented	Equipment Added, Process Changed, or Procedure Implemented	Minimization of Flaring
2007	The following specific measures were implemented to prevent reoccurrence of the PG&E system reliability failures which resulted in flaring in January 2007. PG&E implemented a Management of Change process whereby changes to the PG&E system that directly or indirectly impact the Valero Refinery's operations will be reviewed and approved jointly by the Valero Refinery and PG&E at appropriate levels of engineering and management before changes are implemented. Implemented procedures to ensure PG&E will communicate with the Valero Refinery before any operations or maintenance activities at the PG&E substation that could potentially impact the Valero Refinery's operations. These include notifications for contemporaneous switching notification, planned equipment changes and installation of signs at the PG&E substation.	Moderate
2007	The following specific measures were implemented to prevent reoccurrence of the HCU and compressor equipment failures which resulted in flaring in May 2007. 1) Automatic shut-down systems on the HCU reactors due to high reactor temperature to mitigate a potential catastrophic event. 2) The failed HCU thermocouple was replaced and insulation was repaired. 3) The maintenance on the compressors was conducted; 'A' compressor repairs are still in progress. 'B' compressor was repaired as quickly as possible and returned to service on May 3, 2007. 4) After one leaking thermowell was detected, Operations made a decision to inspect and secure five similar thermowells in an effort to mitigate similar issues. 5) Affected process unit throughputs were reduced to minimize fuel gas production and related flaring.	Minor

Year Installed/ Implemented	Equipment Added, Process Changed, or Procedure Implemented	Minimization of Flaring
2007	The following specific measures were implemented to prevent reoccurrence of fuel gas compressor failures which resulted in flaring in July 2007. The Fuel Gas Compressor valves were reengineered to provide an adequate safety margin for a full range of gases (molecular weight) sent to the online Fuel Gas Compressor under all operating conditions. The new valves were installed in the C2201A which was placed into primary service after its major maintenance and repairs on August 15, 2007. The new valves were installed in C2201B during maintenance scheduled for first quarter 2008. The Valero Refinery has recently implemented a predictive maintenance and performance testing program for both the C2201A and C2201B Fuel Gas Compressors, as well as other Valero Refinery compressors. The goal of this program is to identify potential problems, prior to an event such as a high discharge temperature trip.	Minor
2007	The following specific measures were implemented to prevent flaring from the Ultra Low Sulfur Diesel Unit (ULSD) that was brought online in July 2007. The impact of this new unit on actual flaring has been minimized by engineering the operation to significantly limit the circumstances under which the safety valves will be required to relieve. This is accomplished by over-engineering the major process vessels to allow them to withstand higher internal pressures than otherwise demanded by design codes. In so doing, the set pressures of the various relief valves have been raised. As a result, potential pressure events will be confined within the process vessels without lifting the safety valves and venting to the flare system.	Minor

Year Installed/ Implemented	Equipment Added, Process Changed, or Procedure Implemented	Minimization of Flaring
2007	The following specific measures were implemented to prevent flaring from the ALKY D1002 Maintenance in August 2007. Standing Orders procedures have been updated. Operators are now required to consider the following additional factors regarding the startup of the second flare gas compressor: Check loading on current running flare gas compressor. Check availability of second flare gas compressor. Consider any room available in the fuel gas system. Consider impact of flare gas composition on fuel gas quality. Flaring Minimization forms will be completed more often than previously planned. Initially the forms were to be used for unit Shutdowns, Startups, and Turn-Around activities. These forms will now be completed where partial unit S/D, S/U, TA and maintenance activities could impact flaring. 2015 Update: Flare minimization form procedures have been retired. Routine minimization guidelines have been incorporated into Operational procedures and turnaround planning. Forms have been superseded by IMPACT incident investigation process (see Section 4.1).	Minor

Year Installed/ Implemented	Equipment Added, Process Changed, or Procedure Implemented	Minimization of Flaring
2007	The following specific measures were implemented to prevent flaring from the C701 Check Valve failure in October 2007. In the interim period prior to the next "refinery-wide turnaround" scheduled for 2010, Valero has implemented procedures to ensure that the D-801 check valve will be blocked in whenever the Cat Gas Compressor (C-701) is out of service while the Cat Light Ends (CLE) unit is still in service. These revised operating procedures could help to minimize the likelihood of flaring during a "mid-cycle turnaround". Refer to 2011 update in FMP Table 2-1.	Minor
2007	The following specific measure was implemented to prevent flaring from the C701 Nozzle Control Wiring failure in November 2007. During the November 21, 2007 downtime, temporary jumpers were installed that enabled the A and B nozzle controllers to function properly. Refer to 2011 update in FMP Table 2-1.	Minor
2008	Catalyst Selection Planning. Implemented a Catalyst Selection review process that standardizes the selection process. Catalyst selection depends on equipment requirements and maintenance planning and scheduling coordination. A standardized selection process ensures that opportunities for flare minimization are assessed at the early planning stages.	Minor

Year Installed/ Implemented	Equipment Added, Process Changed, or Procedure Implemented	Minimization of Flaring
2008	The following specific measures were implemented to prevent flaring from the FCC Piping Failure in February 2008. A. FCCU Replacement Piping. The Valero Refinery installed, as a prevention measure, FCCU replacement piping that was stress relieved (heat treated) to eliminate any residual weld stresses. B. Contemporaneous Flare Gas Monitoring for H2S Content. In the past, flare minimization has focused on volume reduction as the primary means to reducing flare emissions. Currently Valero is developing procedures to incorporate flare gas sampling results into flare minimization strategies as the sample results become available. C. Review Low Btu Gases. Valero will continue to evaluate opportunities for improvement of flare minimization procedures associated with the use of low Btu gases, such as nitrogen.	Minor
2008	The following specific measures were implemented to prevent flaring from the HCU Piping Failure in April 2008. Valero conducted repairs to a failed section of HCU equipment pipeline. The weld was cut out and the elbow was cut back a half inch to ensure that the damaged base metal was removed. The welds were made using a special technique supplied by a contractor. The other weld on the same elbow was inspected using in-situ metallographic examination and no creep damage was found.	Minor

Year Installed/ Implemented	Equipment Added, Process Changed, or Procedure Implemented	Minimization of Flaring
2008	The following specific measures were implemented to prevent flaring from the LCNHF Shutdown in June 2008. All feasible prevention measures were incorporated into the planned procedures for conducting the maintenance activities that resulted in this flaring event. These prevention measures helped to minimize flaring but were not able to prevent the flaring event. Prevention measures to minimize and potentially eliminate flaring from planned maintenance activities are described in detail in Section 5.1 of Valero's approved Flare Minimization Plan (FMP) (Rev. 2, submitted on March 16, 2007, updated March 28, 2007 and July 13, 2007). In accordance with the FMP, pre-maintenance planning was conducted to identify prevention measures to minimize and potentially eliminate flaring. All feasible prevention measures were implemented and are described in the causal analysis report. During the post-maintenance review of the flaring event, no additional prevention measures were identified. The maintenance activities were conducted in accordance with Valero's planned procedures that were designed in part to minimize flaring. There were no additional prevention measures that were feasible or practical which could further minimize or eliminate flaring from this planned maintenance activity.	Minor

Year Installed/ Implemented	Equipment Added, Process Changed, or Procedure Implemented	Minimization of Flaring
2008	The following specific measures were implemented to prevent flaring that occurred in September and October 2008 caused by the FCCU Trip in September, 2008. A. Inspections were conducted to other motor starters in the refinery of similar design to ensure a similar problem did not exist. B. The wiring issue was communicated to project engineering. Project engineering is designing PLC motor reacceleration circuits for motor starters throughout the refinery where some of the I/O hardware of the new PLCs will be used. A diagnostic feature is being recommended that can pulse signal to monitor a starter's control circuit. This should be able to detect pinched wires and potential burnt components that can alarm before a trip occurs. C. No changes are recommended at VLE C3/C4 Splitter (T-203) given the potential consequences of an atmospheric release. D. Piping was added to the fuel gas compressors to drain dead legs and low points on fuel gas piping. E. Operations developed daily blowdown procedures for the removal of any accumulated liquids upstream of the fuel gas compressors. F. T-1062 was taken out of service for maintenance to repair the plugging issues. A complete inspection of T-1062 was conducted to ensure reliability before the tower was placed back into service. G. The nitrogen purge system on the C-2201A packing gland operation required a detailed review to ensure it was adjusted. H. Once C-2201B is returned for service, the packing gland operation will be reviewed to ensure it is properly adjusted.	Minor

Year Installed/ Implemented	Equipment Added, Process Changed, or Procedure Implemented	Minimization of Flaring
2008	The following specific measures were implemented to prevent flaring from the CFHU Turnaround in October and November, 2008. All feasible prevention measures were incorporated into the planned procedures for conducting the maintenance activities that resulted in this flaring event. These prevention measures helped to minimize flaring but were not able to prevent the flaring event. Prevention measures to minimize and potentially eliminate flaring from planned maintenance activities are described in detail in Section 5.1 of Valero's approved Flare Minimization Plan (FMP updated March 28, 2007 and July 13, 2007 and Rev. 3.1 submitted on September 16, 2008). In accordance with the FMP, pre-maintenance planning was conducted to identify prevention measures to minimize and potentially eliminate flaring. All feasible prevention measures were implemented and are described in the causal analysis report. During the post-maintenance review of the flaring event, no additional prevention measures were identified. The maintenance activities were conducted in accordance with Valero's planned procedures that were designed in part to minimize flaring. There were no additional prevention measures that were feasible or practical which could further minimize or eliminate flaring from this planned maintenance activity.	Minor

Year Installed/ Implemented	Equipment Added, Process Changed, or Procedure Implemented	Minimization of Flaring
2009	The following specific measures were implemented to prevent flaring from the DHF Turnaround in January, 2009. All feasible prevention measures were incorporated into the planned procedures for conducting the maintenance activities that resulted in this flaring event. These prevention measures helped to minimize flaring but were not able to prevent the flaring event. Prevention measures to minimize and potentially eliminate flaring from planned maintenance activities are described in detail in Section 5.1 of Valero's approved Flare Minimization Plan (FMP updated March 28, 2007 and July 13, 2007 and Rev. 3.1 submitted on September 16, 2008). In accordance with the FMP, pre-maintenance planning was conducted to identify prevention measures to minimize and potentially eliminate flaring. All feasible prevention measures were implemented and are described in the causal analysis report. During the post-maintenance review of the flaring event, no additional prevention measures were identified. The maintenance activities were conducted in accordance with Valero's planned procedures that were designed in part to minimize flaring. There were no additional prevention measures that were feasible or practical which could further minimize or eliminate flaring from this planned maintenance activity.	Minor
2009	The following specific measures were implemented to prevent flaring from the HCU tubing failure in January, 2009 and related HCU operational issues in February, 2009. The following prevention measures were implemented for the flaring event. A. The HCU flow meter tubing was replaced. B. The HCU flow meter tubing and surrounding equipment were assessed for vibration impacts. Additional support was installed where necessary. C. The DHF compressor fan blade and motor were replaced.	Minor

Year Installed/ Implemented	Equipment Added, Process Changed, or Procedure Implemented	Minimization of Flaring
2009	The following specific measures were implemented to prevent flaring from the shutdown operations at the HCU in March, 2009. All feasible prevention measures were incorporated into the planned procedures for conducting the maintenance activities that resulted in this flaring event. These prevention measures helped to minimize flaring but were not able to prevent the flaring event. Prevention measures to minimize and potentially eliminate flaring from planned maintenance activities are described in detail in Section 5.1 of Valero's approved Flare Minimization Plan (FMP) (Rev. 2, submitted on March 16, 2007, updated March 28, 2007 and July 13, 2007). In accordance with the FMP, pre-maintenance planning was conducted to identify prevention measures to minimize and potentially eliminate flaring. All feasible prevention measures were implemented and are described in Section 12 of the applicable causal analysis report. During our post-maintenance review of the flaring event, no additional prevention measures were identified. The maintenance activities were conducted in accordance with Valero's planned procedures that were designed in part to minimize flaring. There were no prevention measures that were feasible or practical to eliminate this flaring.	Minor
2009	The following specific measures were implemented to prevent flaring from the lifting of the safety valves on the Dimersol feed cooling circuit that occurred in March 2009. Once these valves lifted, they did not completely reseat and continued to leak to the flare header. The following prevention measures were implemented for the flaring event. A. Operations replaced the safety valves with storehouse spares and re-commissioned the newly installed safety valves. There were no prevention measures that were feasible or practical to eliminate this flaring.	Minor

Year Installed/ Implemented	Equipment Added, Process Changed, or Procedure Implemented	Minimization of Flaring
2009	The following specific measures were implemented to prevent flaring from the startup operations at the HCU in April 2009. All feasible prevention measures were incorporated into the planned startup procedures that resulted in this flaring event. These prevention measures helped to minimize flaring but were not able to prevent the flaring event. Prevention measures to minimize and potentially eliminate flaring following planned maintenance activities are described in detail in Section 5.1 of Valero's approved Flare Minimization Plan (FMP) (Rev. 3.2, submitted on July 16, 2008, and updated on September 16, 2008 and April 17, 2009). In accordance with the FMP, pre-maintenance planning was conducted to identify prevention measures to minimize and potentially eliminate flaring. All feasible prevention measures were implemented and are described in Section 11 and 12 of the applicable causal analysis report. During a post-maintenance review of the flaring event, no additional prevention measures were identified. The maintenance activities were conducted in accordance with Valero's planned procedures that were designed in part to minimize flaring. There were no additional prevention measures that were feasible or practical which could further minimize or eliminate flaring from this planned maintenance activity.	Minor

Year Installed/ Implemented	Equipment Added, Process Changed, or Procedure Implemented	Minimization of Flaring
2009	The following specific measures were implemented to prevent acid gas flaring due to opening of T-2801 bypass valve and over-pressuring of TK-2801 in April 2009. A majority of the flaring and the resulting emissions from this event were caused by opening the bypass valve around T-2801 overhead pressure control valve [28P053CV(B)] to the Acid Gas Flare. When the bypass valve was discovered open on April 6, the valve was immediately closed. The primary cause of this flaring was the technician failing to understand his work task and failing to make the correct lineup in the field. As a result, operations supervision has a discussion with the technician regarding the flaring event, emphasizing the importance of clear understanding of the task to be conducted, and confirming line-ups in the field before taking any action. The unclear radio communications that resulted in the misunderstanding between the two valves (“P” and “F”) was determined to be a contributing factor that by itself should not have resulted in flaring. Unclear radio communications have not historically caused similar problems and corrective action for improved communication was determined not to be warranted. TK-2801 vapors were manually vented to the Acid Gas Flare in order to prevent the tank safety valves (in sour gas service) from releasing. This flaring was result of an emergency and was necessary to prevent a release to the atmosphere This valve [28P056CV] was opened three times for a total of 29 minutes on April 6 to control tank pressure. The total flow of acid gas to the flare from TK-2801 was less than 0.007 MMSCF and emissions were 76 pounds of SO_2. Flaring in order to prevent an atmospheric release is consistent with Valero’s FMP and Regulation 12-12. There were no prevention measures that were feasible or practical to eliminate this flaring.	Minor

Year Installed/ Implemented	Equipment Added, Process Changed, or Procedure Implemented	Minimization of Flaring
2009	The following specific measures were implemented to prevent flaring from the shutdown operations at the HCNHF in July 2009. All feasible prevention measures were incorporated into the planned procedures for conducting the maintenance activities that resulted in this flaring event. These prevention measures helped to minimize flaring but were not able to prevent the flaring event. Prevention measures to minimize and potentially eliminate flaring from planned maintenance activities are described in detail in Section 5.1 of Valero's approved Flare Minimization Plan (FMP) (Revision No. 3.2, July 16, 2008 (Revised September 16, 2008 and April 17, 2009)). In accordance with the FMP, pre-maintenance planning was conducted to identify prevention measures to minimize and potentially eliminate flaring. All feasible prevention measures were implemented and are described in Section 12 of the applicable causal analysis report. During a post-maintenance review of the flaring event, no additional prevention measures were identified. The maintenance activities were conducted in accordance with Valero's planned procedures that were designed in part to minimize flaring. There were no prevention measures that were feasible or practical to eliminate this flaring.	Minor

Year Installed/ Implemented	Equipment Added, Process Changed, or Procedure Implemented	Minimization of Flaring
2009	The following specific measures were implemented to prevent flaring from the shutdown operations at the LCNHF in July 2009. All feasible prevention measures were incorporated into the planned procedures for conducting the maintenance activities that resulted in this flaring event. These prevention measures helped to minimize flaring but were not able to prevent the flaring event. Prevention measures to minimize and potentially eliminate flaring from planned maintenance activities are described in detail in Section 5.1 of Valero's approved Flare Minimization Plan (FMP) (Revision No. 3.2, July 16, 2008 (Revised September 16, 2008 and April 17, 2009)). In accordance with the FMP, pre-maintenance planning was conducted to identify prevention measures to minimize and potentially eliminate flaring. All feasible prevention measures were implemented and are described in Section 12 of the applicable causal analysis report. During a post-maintenance review of the flaring event, no additional prevention measures were identified. The maintenance activities were conducted in accordance with Valero's planned procedures that were designed in part to minimize flaring. There were no prevention measures that were feasible or practical to eliminate this flaring.	Minor

Year Installed/ Implemented	Equipment Added, Process Changed, or Procedure Implemented	Minimization of Flaring
2009	The following specific measures were implemented to prevent flaring from the startup operations at the HCNHF in July 2009. All feasible prevention measures were incorporated into the planned procedures for conducting the maintenance activities that resulted in this flaring event. These prevention measures helped to minimize flaring but were not able to prevent the flaring event. Prevention measures to minimize and potentially eliminate flaring from planned maintenance activities are described in detail in Section 5.1 of Valero's approved Flare Minimization Plan (FMP) (Revision No. 3.2, July 16, 2008 (Revised September 16, 2008 and April 17, 2009)). In accordance with the FMP, pre-maintenance planning was conducted to identify prevention measures to minimize and potentially eliminate flaring. All feasible prevention measures were implemented and are described in Section 12 of the applicable causal analysis report. During a post-maintenance review of the flaring event, no additional prevention measures were identified. The maintenance activities were conducted in accordance with Valero's planned procedures that were designed in part to minimize flaring. There were no additional prevention measures that were feasible or practical which could further minimize or eliminate flaring from this planned maintenance activity.	Minor
2009	The following prevention measures were implemented to prevent flaring due from the C901 Control Valve failure in July 2009. A The CV9P01A valve positioner was replaced and maintenance was performed to ensure reliable valve performance. B. Maintenance was performed on CKF090 to ensure reliable valve performance. There were no prevention measures that were feasible or practical to eliminate this flaring.	Minor

Year Installed/ Implemented	Equipment Added, Process Changed, or Procedure Implemented	Minimization of Flaring
2009	The following specific measures were implemented to prevent flaring from the shutdown operations at the HCU in August 2009. All feasible prevention measures were incorporated into the planned procedures for this flaring event. These prevention measures helped to minimize flaring but were not able to prevent the flaring event. Prevention measures to minimize and potentially eliminate flaring following planned maintenance activities are described in detail in Section 5.1 of Valero's approved Flare Minimization Plan (FMP) (Rev. 3.2, submitted on July 16, 2008, and updated on September 16, 2008 and April 17, 2009). In accordance with the FMP, pre-maintenance planning was conducted to identify prevention measures to minimize and potentially eliminate flaring. All feasible prevention measures were implemented and are described in Section 11 and 12 of the applicable causal analysis report. During our post-maintenance review of the flaring event, no additional prevention measures were identified. The maintenance activities were conducted in accordance with Valero's planned procedures that were designed in part to minimize flaring. Based on the maintenance project criteria, it was not necessary to completely depressurize the unit, Ni-cool it or prepare it for entry. The limited project criteria minimized the amount of flaring normally associated with a HCU shutdown. There were no prevention measures that were feasible or practical to eliminate this flaring.	Minor
2009	The following specific measures were implemented to prevent flaring from the operations at C2101B in September 2009. Operations repaired the valve. There were no prevention measures that were feasible or practical to eliminate this flaring.	Minor

Year Installed/ Implemented	Equipment Added, Process Changed, or Procedure Implemented	Minimization of Flaring
2009	The following specific measures were implemented to prevent flaring from the operations in October 2009. All feasible prevention measures were incorporated to the extent feasible for the unscheduled, emergency events described in Section 11 of the applicable causal analysis report. These immediate actions and prevention measures helped to minimize flaring but were not able to prevent the flaring event. Prevention measures to minimize and potentially eliminate flaring are described in detail in Section 5.1 of Valero's approved Flare Minimization Plan (FMP) (Revision No. 3.2, July 16, 2008 (Revised September 16, 2008 and April 17, 2009)). In accordance with the FMP, to the extent time permitted under the circumstances, planning was conducted to identify prevention measures to minimize and potentially eliminate flaring. All feasible prevention measures were implemented and are described in Section 12 of the applicable causal analysis report. During a post-incident review of the flaring event, additional prevention measures were identified in order to prevent a similar flaring event from reoccurring in the future.	Minor

Year Installed/ Implemented	Equipment Added, Process Changed, or Procedure Implemented	Minimization of Flaring
2009	The following specific measures were implemented to prevent flaring from the shutdown operations at the CFHU in November/December 2009. All feasible prevention measures were incorporated into the planned procedures for this flaring event. These prevention measures helped to minimize flaring but were not able to prevent the flaring event. Prevention measures to minimize and potentially eliminate flaring following planned maintenance activities are described in detail in Section 5.1 of Valero's approved Flare Minimization Plan (FMP) (Rev. 3.2, submitted on July 16, 2008, and updated on September 16, 2008 and April 17, 2009). In accordance with the FMP, pre-maintenance planning was conducted to identify prevention measures to minimize and potentially eliminate flaring. All feasible prevention measures were implemented and are described in Section 11 and 12 of the applicable causal analysis report. During a post-maintenance review of the flaring event, no additional prevention measures were identified. The maintenance activities were conducted in accordance with Valero's planned procedures that were designed in part to minimize flaring. There were no prevention measures that were feasible or practical to eliminate this flaring.	Minor

Year Installed/ Implemented	Equipment Added, Process Changed, or Procedure Implemented	Minimization of Flaring
2009	The following specific measures were implemented to prevent flaring from the shutdown operations at the HCNHF in December 2009. All feasible prevention measures were incorporated into the planned procedures for conducting the maintenance activities that resulted in this flaring event. These prevention measures helped to minimize flaring but were not able to prevent the flaring event. Prevention measures to minimize and potentially eliminate flaring from planned maintenance activities are described in detail in Section 5.1 of Valero's approved Flare Minimization Plan (FMP) (Revision No. 3.2, July 16, 2008 (Revised September 16, 2008 and April 17, 2009)). In accordance with the FMP, pre-maintenance planning was conducted to identify prevention measures to minimize and potentially eliminate flaring. All feasible prevention measures were implemented and are described in Section 12 of the applicable causal analysis report. During a post-maintenance review of the flaring event, no additional prevention measures were identified. The maintenance activities were conducted in accordance with Valero's planned procedures that were designed in part to minimize flaring. There were no prevention measures that were feasible or practical to eliminate this flaring.	Minor

Year Installed/ Implemented	Equipment Added, Process Changed, or Procedure Implemented	Minimization of Flaring
2009	The following specific measures were implemented to prevent flaring from the startup operations at the HCU in December 2009. All feasible prevention measures were implemented and are described in Section 12 of the applicable causal analysis report. During a post-incident review of the flaring event, no additional prevention measures were identified in order to prevent a similar flaring event from reoccurring in the future. The maintenance activities were conducted in accordance with Valero's planned procedures that were designed in part to minimize flaring. Based on the maintenance project criteria, it was not necessary to completely depressurize the unit, Ni-cool it or prepare it for entry. The limited project criteria minimized the amount of flaring normally associated with a HCU shutdown. The low flow and emissions from this event were the result of the flare minimization efforts, however the H2S concentration of the flare sample for this event was higher than expected based on engineering design calculations. The SO2 calculations are based on a single grab sample that may not be representative of the entire flare event. During the next HCU turnaround, additional flare gas samples and process stream samples will be collected to investigate the H2S sources and concentrations. This activity may result in a more representative H2S and SO2 accounting and perhaps identify future prevention measures. There were no additional prevention measures that were feasible or practical which could further minimize or eliminate flaring from this planned maintenance activity.	Minor

Year Installed/ Implemented	Equipment Added, Process Changed, or Procedure Implemented	Minimization of Flaring
2009	The following specific measures were implemented to prevent flaring from the startup operations at the CFHU in December 2009. All feasible prevention measures were incorporated into the planned procedures for conducting the maintenance activities that resulted in this flaring event. These prevention measures helped to minimize flaring but were not able to prevent the flaring event. Prevention measures to minimize and potentially eliminate flaring from planned maintenance activities are described in detail in Section 5.1 of Valero's approved Flare Minimization Plan (FMP) (Revision No. 3.2, July 16, 2008 (Revised September 16, 2008 and April 17, 2009)). In accordance with the FMP, pre-maintenance planning was conducted to identify prevention measures to minimize and potentially eliminate flaring. All feasible prevention measures were implemented and are described in Section 12 of the applicable causal analysis report. During a post-maintenance review of the flaring event, no additional prevention measures were identified. The maintenance activities were conducted in accordance with Valero's planned procedures that were designed in part to minimize flaring. There were no additional prevention measures that were feasible or practical which could further minimize or eliminate flaring from this planned maintenance activity.	Minor

Year Installed/ Implemented	Equipment Added, Process Changed, or Procedure Implemented	Minimization of Flaring
2010	The following specific measures were implemented to prevent flaring from the shutdown operations at the DHF in January 2010. All feasible prevention measures were incorporated into the planned procedures for this flaring event. These prevention measures helped to minimize flaring but were not able to prevent the flaring event. Prevention measures to minimize and potentially eliminate flaring following planned maintenance activities are described in detail in Section 5.1 of Valero's approved Flare Minimization Plan (FMP) Valero Refinery's approved FMP (Revision No. 4, October 1, 2009). In accordance with the FMP, pre-maintenance planning was conducted to identify prevention measures to minimize and potentially eliminate flaring. All feasible prevention measures were implemented and are described in Section 11 and 12 of the applicable causal analysis report. During a post-maintenance review of the flaring event, no additional prevention measures were identified. The maintenance activities were conducted in accordance with Valero's planned procedures that were designed in part to minimize flaring. There were no prevention measures that were feasible or practical to eliminate this flaring.	Minor

Year Installed/ Implemented	Equipment Added, Process Changed, or Procedure Implemented	Minimization of Flaring
2010	The following specific measures were implemented to prevent flaring from the C-902 Trip in January 2010. *Operations* replaced a Potter & Brumfield 120VAC relay and replaced the CMC switch contacts on the emergency shutdown at the control house. According to the Electrical and Instrumentation Personnel, the relays and switches were the only mechanical parts within the suspect circuit. Although it is a rare occurrence that these types of relays and switches malfunction, they were replaced as *a precautionary measure, where no other issues could be determined to be the cause.* There were no prevention measures that were feasible or practical to eliminate this flaring. Prevention measures to minimize and potentially eliminate flaring from planned maintenance activities are described in detail in Section 4.1 of Valero's approved Flare Minimization Plan	Minor

Year Installed/ Implemented	Equipment Added, Process Changed, or Procedure Implemented	Minimization of Flaring
2010	The following specific measures were implemented to prevent flaring from the T-2831 Turnaround in May 2010. Operations blocked in the valve and removed it for testing and performance specifications review. The vendor repairs to this valve resulted in valve position settings that were incorrect for this service application. The faulty valve was replaced with one that had the correct settings for this service application. The contractor responsible for maintaining and verifying the Panametric Flare Flow Meter operation was brought onsite to assess the operation of the Acid Gas Flare Flow meter. It was determined that it was operating normally. Additionally, the contractor conducted the regularly scheduled flow verification for all the Panametric Flare Flow Meters in the first week of June 2010. Again the contractor determined that the flow meters had been properly operating during the event. A baseline level of noise is normally expected in both the raw and pressure validated flow measurement. The meter is operated and maintained in accordance with BAAQMD Regulation 12-11-501. The Turnaround procedures and review have been updated with additional checks to ensure equipment sent out for repair meets the required specifications for the service application. Additional procedures, checklists and training were developed, communicated and implemented to the operations employees to improve troubleshooting flows to the Acid Gas flare.	Minor

Year Installed/ Implemented	Equipment Added, Process Changed, or Procedure Implemented	Minimization of Flaring
2010	The following specific measures were implemented to prevent flaring from the shutdown operations at the VNHF in May 2010. The shutdown and depressuring operations followed prepared procedures. These procedures minimize flaring and ensure the safety of personnel and equipment. There was no upset or malfunction involved. The Valero Refinery has developed specialized depressuring, cooling, and inerting procedures designed to eliminate process vapors from venting to the atmosphere during depressuring and vessel opening. The spare flare gas compressor C2101B was on ready standby in the event flare gas compressor C2101A was unable to recover flare gas. Due to high nitrogen in the fuel gas, additional recovery of flare gas through the supplemental use of C2101B was not feasible. Operations verified that no unnecessary sources were venting to the flare system prior to beginning flaring of nitrogen-rich vent gas. Fuel gas quality was continuously monitored to determine when it was safe to operate the flare gas compressors to recover flare gas. There were no prevention measures that were feasible or practical to eliminate this flaring. Prevention measures to minimize and potentially eliminate flaring from planned maintenance activities are described in detail in Section 4.1 of Valero's approved Flare Minimization Plan	Minor

Year Installed/ Implemented	Equipment Added, Process Changed, or Procedure Implemented	Minimization of Flaring
2010	A new Butamer Unit (BTR) was installed in February 2010 at the Benicia Refinery. This unit should reduce potential flaring from the Alkylation Unit by providing a more reliable source of isobutane to Alky. Flare minimization steps associated with major maintenance activities, including startup and shutdown, have been developed. The Benicia Refinery has generic experience starting and shutting down other units and used this experience to establish the initial Butamer procedures. The procedures will be refined and improved based on specific experience with the new unit in service.	Minor
2010	A new CARB Phase III Modifications project was installed in April 2010 at the Benicia Refinery. These changes will reduce flaring by maintaining the run lengths of the HCNHF and LCNHF at the higher operating severities necessary to meet the tighter gasoline specifications. Flare minimization steps associated with major maintenance activities, including startup and shutdown, have been developed. The Benicia Refinery has generic experience starting and shutting down similar equipment and used this experience to develop the initial equipment procedures. However, the procedures will be refined and improved based on specific experience with the new equipment once it is placed into service.	Minor

Year Installed/ Implemented	Equipment Added, Process Changed, or Procedure Implemented	Minimization of Flaring
2010	To improve safety of the community, personnel and equipment, a project rerouted an atmospheric safety device in the Crude Unit at the Benicia Asphalt Plant (BAP) to the Refinery flare header in March 2010. Previously, this safety valve relieved to the atmosphere and was regulated under BAAQMD 8-28. This project improved safety at the Crude Unit through rerouting this safety valve to the Refinery flare header, and recovering the Crude Unit off gases in the Refinery fuel gas system. This project also removed caustic scrubbing at the BAP. Scrubbing the BAP off gas in the refinery's more robust fuel gas scrubbing system benefits safety and removes caustic scrubbing chemicals from the BAP. Flare minimization steps associated with major maintenance activities, including startup and shutdown, have been developed. The Benicia Refinery has generic experience starting and shutting down other units and used this experience to establish the initial configuration operating procedures. However, the procedures will be refined and improved based on specific experience with the new configuration in service.	Minor

Year Installed/ Implemented	Equipment Added, Process Changed, or Procedure Implemented	Minimization of Flaring
2010	The following specific measures were implemented to prevent flaring from the shutdown operations at the Alky Unit in July 2010. Operating procedures were updated to provide additional specific information on the Alky reaction zone chemistry and troubleshooting. The Alky normal and operating procedures were reviewed using feedback from the event investigation. The unit manufacturer was also brought on site to make recommendations for future implementation for the Alky equipment. The manufacturer had only minor recommendations to the procedures, none of which would have prevented the event from occurring. 22 alarms were added/changed to alert operators of falling acid strength, carryover of water, side reactions, poor neutralization, and acid carryover, as these were recognized as potential acid runaway indicators. Supplemented training on Alky acid runaway identification and emergency procedures. Refresher computer based training was conducted as well as a training course from the manufacturer.	Minor
2010	The following specific measures were implemented to prevent flaring from the C-101C and C-2101B maintenance in August 2010. A work order was generated to conduct maintenance on C-2101B. Because the work can only be completed while the compressor is shutdown, the work is scheduled for a later date when there would be less planned activity in the flare header. Opportunistic scheduling decreases the chance of flaring due to one operational flare gas compressor and therefore increases the flare load recovery.	Minor

Year Installed/ Implemented	Equipment Added, Process Changed, or Procedure Implemented	Minimization of Flaring
2010	The following specific measures were implemented to prevent flaring from the startup operations at the HCU in August 2010. Prevention measures to minimize and potentially eliminate flaring following planned activities are described in detail in Section 4.1 of Valero's approved Flare Minimization Plan (FMP) Valero Refinery's approved FMP (Revision No. 4, October 1, 2009). In accordance with the FMP, planning was conducted to identify prevention measures to minimize and potentially eliminate flaring. The low flow and emissions from this event are the result of the flare minimization efforts, however the H2S concentration of the flare sample for this event was higher than expected based on engineering design calculations. The SO2 calculations are based on a single grab sample that may not be representative of the entire flare event. During the next planned HCU turnaround, additional flare gas samples and process stream samples will be collected to investigate the H2S sources and concentrations. This activity may result in a more representative H2S and SO2 accounting and perhaps identify future prevention measures. It should be noted that this activity will not be conducted during the upcoming refinery-wide turnaround, as the flaring during that period will not be representative of the HCU but of multiple units. Therefore this activity will occur at the next planned HCU turnaround when the HCU is the only significant contributor to the flare header. There were no additional prevention measures beyond those listed in FMP Table 4.2 that were feasible or practical which could further minimize or eliminate flaring from this planned maintenance activity.	Minor

Year Installed/ Implemented	Equipment Added, Process Changed, or Procedure Implemented	Minimization of Flaring
2010	The following specific measures were implemented to prevent flaring from the operational difficulties of C-2101A/B in August 2010. On August 31st, Valero's electrical contractor responded to the C-2101A trip and reset the DR relay inside the 4160v starter. On September 1st, I/E replaced a transmitter and relocated tubing as part of maintenance on C-2101A.	Minor
2010	The following specific measures were implemented to prevent flaring from the GT-401 trip at the HCU in September 2010. The 2.5 amp fuse was replaced with a 5 amp fuse. The Triconex logic was corrected in all four turbines (GT-401, GT-701, GT-702, and GT-1031) so that the logic that causes the compressor to trip on loss of three flame scanners will only be used during the startup period. The supply circuit design and associated input output circuits will be reviewed. The following items will be evaluated during the review: • having two independent power sources, • breaker sizing, • fuse sizing, • power failure alarms, • independent fusing for each input/output, • verifying components have redundant power sources, • scheduling PM program on power modules, • testing redundant uninterruptable power supply feeds.	Minor

Year Installed/ Implemented	Equipment Added, Process Changed, or Procedure Implemented	Minimization of Flaring
2010	The following specific measures were implemented to prevent flaring from the shutdown operations at the FCCU in December 2010. • Reinstalled isolation block valves around the feed control valve to a horizontal position to prevent future “dropped gate” occurrences. • Compiled FCCU expertise for performing reactor and regenerator “pressure bumps” to manage catalyst settling and movement during established critical periods. • Developed FCCU procedures for use of reactor and regenerator “pressure bumps” to manage catalyst settling and movement during established critical periods. • Modified procedures for operating the FCCU to include changes in sampling, key process indicators, pressure bumps and other factors. • Developed and conducted refresher training for the FCC startup team, including supervisors and technicians. Training will later be extended beyond the startup team. • Installed new hot oil circulation facilities to reduce the risk of plugging the FCCU feed drums and pump-arounds during hot oil recirculation. • Improved reactor pressure control to reduce the probability of regenerator cyclone plugging on a feed outage. • Developed and implemented high trip temperatures for spent transfer line to prevent the probability of an unnecessary feed trip. • Designed anti-surge system for wet gas compressor C-701 to stabilize the fractionators OH pressure and keep the compressor running during feed trip events.	Minor

Year Installed/ Implemented	Equipment Added, Process Changed, or Procedure Implemented	Minimization of Flaring
2010	The following specific measures were implemented to prevent flaring from the refinery-wide shutdown operations in December 2010. There were no additional prevention measures beyond those listed in FMP Table 4.2 that are feasible or practical which can further minimize or eliminate flaring from this planned maintenance activity. All feasible prevention measures were incorporated to the extent feasible for the event. These immediate actions and prevention measures helped to minimize flaring but were not able to prevent the flaring event. Planning was conducted to identify prevention measures to minimize and potentially eliminate flaring. Prior to the event, months of scheduling had been done for the planned turnaround. An environmental engineer met with each unit and went over all procedures that would be used during shutdown and startup for the unit. Taking this information, and keeping within the restraints of the refinery design (i.e. staggered refinery-wide shutdown due to integration of units) the environmental engineer documented all procedure steps that would result in flaring and made suggestions to minimize flaring when possible. Unfortunately due to the unplanned shutdown of the FCCU in early December, the turnaround timeline was not able to be executed as planned. During a post-incident review of the flaring event, no additional prevention measures were identified in order to prevent a similar flaring event from reoccurring in the future. The maintenance activities on the flare gas recovery compressors were conducted in accordance with Valero's planned procedures that were designed in part to minimize flaring.	Minor

Year Installed/ Implemented	Equipment Added, Process Changed, or Procedure Implemented	Minimization of Flaring
2010-2011	The following specific measures were implemented to prevent flaring from the ALKY D1002 Maintenance in August 2007. During the 2010-2011 "refinery-wide turnaround" the scheduled resolution of the D-1002 safety valve bypass problem by replacing it or some other engineering or operational solution was completed. The safety valve was replaced. The valve could not be repaired or replaced outside of turnaround. The D-1002 safety valve bypass is directly connected to the flare and could not be safely replaced while the Alky Unit or the flare line was operational.	Minor
2010-2011	The following specific measures were implemented prevent flaring from the C701 Check Valve failure in October 2007. During the 2010-2011 "refinery-wide turnaround" the scheduled resolution of the D-801 check valve problem by replacing it with a new check valve, an assisted check valve, a motor operated valve, or some other engineering or operational solution was completed. The check valve was replaced. The check valve could not be repaired or replaced outside of turnaround. The D-801 check valve is only needed when the Cat Gas Compressor (C-701) is out of service while the Cat Light Ends (CLE) unit is still in service. This only occurs under two scenarios; (1) during a "mid-cycle turnaround" about every 5 to 6 years if C-701 is taken out of service for maintenance or (2) if there is a malfunction at C-701 or GT-701, the gas turbine which drives C-701.	Minor
2010-2011	The following specific measure was determined to be feasible and was implemented to prevent flaring from the C701 Nozzle Control Wiring failure in November 2007. The temporary wiring was removed and the wiring problem corrected during the 2010-2011 refinery-wide turnaround.	Minor

Year Installed/ Implemented	Equipment Added, Process Changed, or Procedure Implemented	Minimization of Flaring
2011	The following specific measures were implemented to prevent flaring from the refinery-wide turnaround and startup operations in January through March 2011. Review procedures to address high volumes of heavier hydrocarbon vapors (C5 hydrocarbons) to the flare header. A training CBT was issued following that event and is set as a reoccurring refresher training. There were no additional prevention measures beyond those listed in FMP Table 4.2 that were feasible or practical which could further minimize or eliminate flaring from this planned maintenance activity. All feasible prevention measures were incorporated to the extent feasible for the event. Prevention measures to minimize and potentially eliminate flaring from planned maintenance activities are described in detail in Section 4.1 of Valero's approved Flare These immediate actions and prevention measures helped to minimize flaring but were not able to prevent the flaring event. Planning was conducted to identify prevention measures to minimize and potentially eliminate flaring. During our post-incident review of the flaring event, no additional prevention measures were identified in order to prevent a similar flaring event from reoccurring in the future. The maintenance activities on the flare gas recovery compressors were conducted in accordance with Valero's planned procedures that were designed in part to minimize flaring.	Minor

Year Installed/ Implemented	Equipment Added, Process Changed, or Procedure Implemented	Minimization of Flaring
2011	The following specific measures were implemented to prevent flaring from the shutdown and startup operations at the HCU due to a gasket failure of H2U drum D-311B in March 2011. The level site glass was replaced. The block valves on the D-311B sight glass were replaced with ball check style valves. Manway gasket and bolting on D-311B were replaced. Repacked a 3/4" valve that was scorched by the heat from the fire. The hardness of the pipe that was exposed to the fire was checked and re-verified to be safe to return to service.	Minor
2011	The following specific measures were implemented to prevent flaring from operations at the Alky Unit in March 2011. The failed weld area was filled in with a compatible metal material and re-welded. Other welds near the failed weld were radiographed and no further damage was found.	Minor
2011	The following specific measures were implemented to prevent flaring from an SRU A Train trip in March 2011. • Evaluated a Safety Instrumented System (SIS) upgrade project for SRU A train to be implemented by the end of 2012. This will include evaluating changing the controls from pneumatic controls to PLC (electronic) controls, resulting in higher reliability of the equipment. • Conduct a refresher training on new incinerator operations and diversion scenarios • Conduct additional training for the Diversion MOV bypass switch operations	Minor

Year Installed/ Implemented	Equipment Added, Process Changed, or Procedure Implemented	Minimization of Flaring
2011	The following specific measures were implemented to prevent flaring from the C-302D trip in March 2011. Upon investigation, the underground control cable to the C-302D motor was found to be shorted. The cable ran next to the fire water main which had been excavated for maintenance. The investigation determined that the cable was most likely damaged while the piping in this area was being excavated. A temporary cable was run above grade and the compressor was restarted. Evaluate rerouting the control cable when the permanent cable is ready to be installed.	Minor
2011	The following specific measures were implemented to prevent flaring from operations due to closed in-line analyzer valves at the H2U in April 2011. There were no additional prevention measures beyond those listed in FMP Table 4.2 that were feasible or practical which could further minimize or eliminate flaring from this event. All feasible prevention measures were incorporated to the extent feasible for the event. These immediate actions and prevention measures helped to minimize flaring but were not able to prevent the flaring event. During a post-incident review of the flaring event, no additional prevention measures were identified in order to prevent a similar flaring event from reoccurring in the future. Prevention measures to minimize and potentially eliminate flaring from planned maintenance activities are described in detail in Section 4.1 of Valero's approved Flare Minimization Plan.	Minor

Year Installed/ Implemented	Equipment Added, Process Changed, or Procedure Implemented	Minimization of Flaring
2011	The following specific measures were implemented to prevent flaring from operations due to D-302 and D-610 clearing in June 2011. There were no additional prevention measures beyond those listed in FMP Table 4.2 that were feasible or practical which could further minimize or eliminate flaring from this event. All feasible prevention measures were incorporated to the extent feasible for the event. These immediate actions and prevention measures helped to minimize flaring but were not able to prevent the flaring event. During a post-incident review of the flaring event, no additional prevention measures were identified in order to prevent a similar flaring event from reoccurring in the future. Prevention measures to minimize and potentially eliminate flaring from planned maintenance activities are described in detail in Section 4.1 of Valero's approved Flare Minimization Plan.	Minor
2011	Installation of a filter and a set guard bed reactors by re-commissioning existing MTBE vessels to protect the existing Alkylation Hydrogenator Reactor catalyst from contamination in the feed. The filter and Alky guard bed reactors will help to mitigate fouling the downstream hydrogenator catalyst by removing some of the feed arsine, light sulfur compounds and chlorides before it reaches the hydrogenator reactor. By removing these impurities upstream of the Alkylation Hydrogenation Reactor, the catalyst life is extended resulting in fewer Alkylation Unit turnarounds. Fewer turnarounds translate to less flaring due to equipment clearing, startup and shutdown.	Minor

Year Installed/ Implemented	Equipment Added, Process Changed, or Procedure Implemented	Minimization of Flaring
2011	The following specific measures were implemented to prevent flaring from operations in July 2011. All feasible prevention measures were incorporated to the extent feasible for the event. These immediate actions and prevention measures helped to minimize flaring but were not able to prevent the flaring event. During a post-incident review of the flaring event, the following additional prevention measures were identified in order to prevent a similar flaring event from reoccurring in the future. • Communicated the requirement to follow range guidelines in the approved CIC check procedures. This statement was already in place in the long-term orders (Standing Orders) prior to the event, but the statement was added to the daily orders (Night Orders).	Minor
2011	The following relates to flaring from operations in September 2011. There are no additional prevention measures beyond those listed in FMP Table 4.2 that are feasible or practical which can further minimize or eliminate flaring from this event. All feasible prevention measures were incorporated to the extent feasible for the event. These immediate actions and prevention measures helped to minimize flaring but were not able to prevent the flaring event. During a post-incident review of the flaring event, no additional prevention measures were identified in order to prevent a similar flaring event from reoccurring in the future. The activities were conducted in accordance with Valero's planned procedures that were designed in part to minimize flaring. Prevention measures to minimize and potentially eliminate flaring from planned maintenance activities are described in detail in Valero's approved Flare Minimization Plan.	Minor

Year Installed/ Implemented	Equipment Added, Process Changed, or Procedure Implemented	Minimization of Flaring
2011	The following specific measures were implemented to prevent flaring from operations in September 2011. All feasible prevention measures were incorporated to the extent feasible for the event. These immediate actions and prevention measures helped to minimize flaring but were not able to prevent the flaring event. During a post-incident review of the flaring event, the following additional prevention measures were identified in order to prevent a similar flaring event from reoccurring in the future. • Modify procedures to maintain C-401 operation following a F-401 trip.	Minor
2011	The following specific measures were implemented to prevent flaring from operations in October 2011. All feasible prevention measures were incorporated to the extent feasible for the event. These immediate actions and prevention measures helped to minimize flaring but were not able to prevent the flaring event. During a post-incident review of the flaring event, the following additional prevention measures were identified in order to prevent a similar flaring event from reoccurring in the future. Specific measures that were implemented to prevent reoccurrence related to this incident include: • The flame scanner was removed, serviced, and replaced to prevent reoccurrence of water entering the flame scanner equipment. • The condensate from the nearby steam line was rerouted away from the flame scanner to prevent additional water from being near the flame scanner.	Minor

Year Installed/ Implemented	Equipment Added, Process Changed, or Procedure Implemented	Minimization of Flaring
2011	The following relates to flaring from operations in October 2011. (GT-701) There are no additional prevention measures beyond those listed in FMP Table 4.2 that are feasible or practical which can further minimize or eliminate flaring from this event. All feasible prevention measures were incorporated to the extent feasible for the event. These immediate actions and prevention measures helped to minimize flaring but were not able to prevent the flaring event. During a post-incident review of the flaring event, no additional prevention measures were identified in order to prevent a similar flaring event from reoccurring in the future. The activities were conducted in accordance with Valero's planned procedures that were designed in part to minimize flaring. Prevention measures to minimize and potentially eliminate flaring from planned maintenance activities are described in detail in Valero's approved Flare Minimization Plan.	Minor
2011	The following relates to flaring from operations in October 2011. (C2101) There are no additional prevention measures beyond those listed in FMP Table 4.2 that are feasible or practical which can further minimize or eliminate flaring from this event. All feasible prevention measures were incorporated to the extent feasible for the event. These immediate actions and prevention measures helped to minimize flaring but were not able to prevent the flaring event. During a post-incident review of the flaring event, no additional prevention measures were identified in order to prevent a similar flaring event from reoccurring in the future. The activities were conducted in accordance with Valero's planned procedures that were designed in part to minimize flaring. Prevention measures to minimize and potentially eliminate flaring from planned maintenance activities are described in detail in Valero's approved Flare Minimization Plan.	Minor

Year Installed/ Implemented	Equipment Added, Process Changed, or Procedure Implemented	Minimization of Flaring
2011	The following specific measures were implemented to prevent flaring from operations in November 2011. All feasible prevention measures were incorporated to the extent feasible for the event. These immediate actions and prevention measures helped to minimize flaring but were not able to prevent the flaring event. During a post-incident review of the flaring event, the following additional prevention measures were identified in order to prevent a similar flaring event from reoccurring in the future. • Installed a new set screw and spring into the trip assembly, the set screw threads were staked, and then set screw was loctited in place • Replaced tension spring on the trip lever • Repaired the bushings to prevent low oil pressure within the compressor • Evaluate maintenance and overspeed check procedures for steam turbines • Evaluate adding a calculated tag to examine the feed meter versus product flow meter to indicate when there may be oil carryover • Evaluate adding an independent level instrument to D-602 for redundant instrumentation • Conduct a refresher training class for operations controllers on the MEA system for troubleshooting and indication of high MEA losses	Minor

Year Installed/ Implemented	Equipment Added, Process Changed, or Procedure Implemented	Minimization of Flaring
2012	The following specific measures were implemented to prevent flaring from operations in February 2012. All feasible prevention measures were incorporated to the extent feasible for the event. These immediate actions and prevention measures helped to minimize flaring but were not able to prevent the flaring event. During a post-incident review of the flaring event, the following additional prevention measures were identified in order to prevent a similar flaring event from reoccurring in the future. • The control valve (CVL012) was replaced • Upgrade valves in the CVL012 bypass loop during the next CFHU turnaround • Because the DIM startup was a result of a DIM shutdown for maintenance work, the following prevention measures were implemented to prevent reoccurrence related to the shutdown and thus the related startup: • The circuit of piping where the leak occurred was replaced; • The location were the leak occurred has been added to a more rigorous inspection schedule; • Similar piping circuits were evaluated for similar isolated damage.	Minor

Year Installed/ Implemented	Equipment Added, Process Changed, or Procedure Implemented	Minimization of Flaring
2012	The following relates to flaring from operations in June 2012. (DHF) There are no additional prevention measures beyond those listed in FMP Table 4.2 that are feasible or practical which can further minimize or eliminate flaring from this event. All feasible prevention measures were incorporated to the extent feasible for the event. These immediate actions and prevention measures helped to minimize flaring but were not able to prevent the flaring event. During a post-incident review of the flaring event, no additional prevention measures were identified in order to prevent a similar flaring event from reoccurring in the future. The activities were conducted in accordance with Valero's planned procedures that were designed in part to minimize flaring. Prevention measures to minimize and potentially eliminate flaring from planned maintenance activities are described in detail in Valero's approved Flare Minimization Plan.	Minor
2012	The following relates to flaring from operations in July-August 2012. (FCCU) There are no additional prevention measures beyond those listed in FMP Table 4.2 that could have further minimized or eliminated flaring from this event. These immediate actions and prevention measures helped to minimize flaring but were not able to prevent the flaring event. During a post-incident review of the flaring event, no additional prevention measures were identified in order to prevent a similar flaring event from reoccurring in the future. The activities were conducted in accordance with Valero's planned procedures that were designed in part to minimize flaring. Prevention measures to minimize and potentially eliminate flaring from planned maintenance activities are described in detail in Valero's approved Flare Minimization Plan.	Minor

Year Installed/ Implemented	Equipment Added, Process Changed, or Procedure Implemented	Minimization of Flaring
2012	The following relates to flaring from operations in August 2012. (HCU) Valero will review the procedures to align the requirements for the re-introduction of feed following a feed pump trip (temperature, Fractionator level, etc) and this may lead to improved unit restart and reduced flaring. All feasible prevention measures were incorporated into the planned procedures for this flaring event. There are no additional prevention measures beyond those listed in FMP Table 4.2 that can further minimize or eliminate flaring from this event. These immediate actions and prevention measures helped to minimize flaring but were not able to prevent the flaring event. During a post-incident review of the flaring event, no additional prevention measures were identified in order to prevent a similar flaring event from reoccurring in the future. The activities were conducted in accordance with Valero's planned procedures that were designed in part to minimize flaring. Prevention measures to minimize and potentially eliminate flaring from planned maintenance activities are described in detail in Valero's approved Flare Minimization Plan.	Minor

Year Installed/ Implemented	Equipment Added, Process Changed, or Procedure Implemented	Minimization of Flaring
2012	The following relates to flaring from operations in November 2012. (HCU) During a post-incident review of the flaring event, the following additional prevention measures were identified in order to prevent a similar flaring event from reoccurring in the future. Specific measures that were implemented to prevent reoccurrence related to this incident include: • Operations has extended the duration of the separation drum blowdown activities to ensure any residual unconverted oil is removed from the drum through the boot to reduce the likelihood of water being sent to T-501. This prevention measure should reduce the occurrence of water sent to the tower. • Additionally, because the safety valve lifted, it will be inspected and reviewed to ensure continued performance. There are no additional prevention measures beyond those listed above and in FMP Table 4.2 that can further minimize or eliminate flaring from this event. These immediate actions and prevention measures helped to minimize flaring but were not able to prevent the flaring event. The activities were conducted in accordance with Valero's planned procedures that were designed in part to minimize flaring. Prevention measures to minimize and potentially eliminate flaring from planned maintenance activities are described in detail in Valero's approved Flare Minimization Plan.	Minor

Year Installed/ Implemented	Equipment Added, Process Changed, or Procedure Implemented	Minimization of Flaring
2012	The following relates to flaring from operations in November 2012. (HCU) All feasible prevention measures were incorporated into the planned procedures for this flaring event. There are no additional prevention measures beyond those listed in FMP Table 4.2 that can further minimize or eliminate flaring from this event. These immediate actions and prevention measures helped to minimize flaring but were not able to prevent the flaring event. During a post-incident review of the flaring event, no additional prevention measures were identified in order to prevent a similar flaring event from reoccurring in the future. The activities were conducted in accordance with Valero's planned procedures that were designed in part to minimize flaring. Prevention measures to minimize and potentially eliminate flaring from planned maintenance activities are described in detail in Valero's approved Flare Minimization Plan.	Minor
2012	The following relates to flaring from Turnaround operations in November 2012. (VNHF) All feasible prevention measures were incorporated into the planned procedures for this flaring event. There are no additional prevention measures beyond those listed in FMP Table 4.2 that can further minimize or eliminate flaring from this event. These immediate actions and prevention measures helped to minimize flaring but were not able to prevent the flaring event. During a post-incident review of the flaring event, no additional prevention measures were identified in order to prevent a similar flaring event from reoccurring in the future. The activities were conducted in accordance with Valero's planned procedures that were designed in part to minimize flaring. Prevention measures to minimize and potentially eliminate flaring from planned maintenance activities are described in detail in Valero's approved Flare Minimization Plan.	Minor

Year Installed/ Implemented	Equipment Added, Process Changed, or Procedure Implemented	Minimization of Flaring
2012/2013	The following specific measures were implemented to prevent flaring from an SRU A Train trip in March 2011. Evaluated a Safety Instrumented System (SIS) upgrade project for SRU A train. Implemented upgrade in 2012 and during the 2013 TA, cutover to the new system that included upgraded to the controls resulting in higher reliability of the equipment.	Minor
2013	The following relates to flaring from Turnaround operations in January 2013. (NRU) All feasible prevention measures were incorporated into the planned procedures for this flaring event. There are no additional prevention measures beyond those listed in FMP Table 4.2 that can further minimize or eliminate flaring from this event. These immediate actions and prevention measures helped to minimize flaring but were not able to prevent the flaring event. The activities were conducted in accordance with Valero's planned procedures that were designed in part to minimize flaring. Prevention measures to minimize and potentially eliminate flaring from planned maintenance activities are described in detail in Valero's approved FMP.	Minor

Year Installed/ Implemented	Equipment Added, Process Changed, or Procedure Implemented	Minimization of Flaring
2013	The following relates to flaring from Turnaround operations in February 2013 (HCNHF, H2U-A, DHU, CFHU). All feasible prevention measures were incorporated into the planned procedures for this flaring event. There are no additional prevention measures beyond those listed in FMP Table 4.2 that can further minimize or eliminate flaring from this event. These immediate actions and prevention measures helped to minimize flaring but were not able to prevent the flaring event. During a post-incident review of the flaring event, no additional prevention measures were identified in order to prevent a similar flaring event from reoccurring in the future. The activities were conducted in accordance with Valero's planned procedures that were designed in part to minimize flaring. Prevention measures to minimize and potentially eliminate flaring from planned maintenance activities are described in detail in Valero's approved Flare Minimization Plan.	Minor
2013	The following relates to flaring from Turnaround operations in March 2013 (HCNHF, H2U-A/B, DHU, CFHU, HCU). All feasible prevention measures were incorporated into the planned procedures for this flaring event. There are no additional prevention measures beyond those listed in FMP Table 4.2 that can further minimize or eliminate flaring from this event. These immediate actions and prevention measures helped to minimize flaring but were not able to prevent the flaring event. During a post-incident review of the flaring event, no additional prevention measures were identified in order to prevent a similar flaring event from reoccurring in the future. The activities were conducted in accordance with Valero's planned procedures that were designed in part to minimize flaring. Prevention measures to minimize and potentially eliminate flaring from planned maintenance activities are described in detail in Valero's approved Flare Minimization Plan.	Minor

Year Installed/ Implemented	Equipment Added, Process Changed, or Procedure Implemented	Minimization of Flaring
2013	The following relates to flaring from Turnaround operations in April 2013 (DHU). All feasible prevention measures were incorporated into the planned procedures for this flaring event. There are no additional prevention measures beyond those listed in FMP Table 4.2 that can further minimize or eliminate flaring from this event. These immediate actions and prevention measures helped to minimize flaring but were not able to prevent the flaring event. The activities were conducted in accordance with Valero's planned procedures that were designed in part to minimize flaring. Prevention measures to minimize and potentially eliminate flaring from planned maintenance activities are described in detail in Valero's approved FMP.	Minor
2013	The following relates to flaring from Turnaround operations in April 2013 (CFHU). All feasible prevention measures were incorporated into the planned procedures for this flaring event. There are no additional prevention measures beyond those listed in FMP Table 4.2 that can further minimize or eliminate flaring from this event. These immediate actions and prevention measures helped to minimize flaring but were not able to prevent the flaring event. During a post-incident review of the flaring event, no additional prevention measures were identified in order to prevent a similar flaring event from reoccurring in the future. The activities were conducted in accordance with Valero's planned procedures that were designed in part to minimize flaring. Prevention measures to minimize and potentially eliminate flaring from planned maintenance activities are described in detail in Valero's approved Flare Minimization Plan.	Minor

Year Installed/ Implemented	Equipment Added, Process Changed, or Procedure Implemented	Minimization of Flaring
2013	The following relates to flaring from upset operations in May 2013 (SRU). During a post-incident review of the flaring event, the following additional prevention measures were identified in order to prevent a similar flaring event from reoccurring in the future. Specific measures that were implemented to prevent reoccurrence related to this incident include: • Cleaned or replaced system strainers and steam traps to improve flow in the condensate system. • Communicated tower flow obstruction conditions to Control Board Operators. • Installed a rich MEA filter to remove particulate and reduce restriction propagation.	Minor
2013	The following relates to flaring from upset operations in June 2013 (FCCU). The following prevention measure was identified and is being implemented to reduce the likelihood of a recurrence of the type of reportable flaring event that occurred: • Reviewed setpoints and procedures for setpoint changes. • Communicated summary of incident to Control Board Operators (CBOs) • Communicated procedures for setpoint changes to CBOs. For flaring associated with unit shutdown and startup, all feasible prevention measures have been incorporated into Valero's written procedures. Shutdown and startup activities were conducted in accordance with Valero's written procedures that were designed in part to minimize flaring.	Minor

Year Installed/ Implemented	Equipment Added, Process Changed, or Procedure Implemented	Minimization of Flaring
2013	The following relates to flaring from upset operations in September 2013 (FCCU). There are no additional prevention measures beyond those listed in FMP Table 4.2 that are feasible or practical which can further minimize or eliminate flaring from this event. All feasible prevention measures were incorporated to the extent feasible for the event. These immediate actions and prevention measures helped to minimize flaring but were not able to prevent the flaring event. During a post-incident review of the flaring event, no additional prevention measures were identified in order to prevent a similar flaring event from recurring in the future. The activities were conducted in accordance with Valero's planned procedures that were designed in part to minimize flaring. Prevention measures to minimize and potentially eliminate flaring from planned maintenance activities are described in detail in Valero's approved Flare Minimization Plan.	Minor
2014	The following relates to flaring from turnaround maintenance in February 2014. All feasible prevention measures were planned and procedures incorporated for the unit shutdowns and startups associated with the planned maintenance. These prevention measures and procedures help minimize flaring but are not able to completely prevent flaring, as described in #12 above.	Minor
2014	The following relates to flaring from upset operations in April 2014 (C-2101B) The C-2101B flare gas recovery compressor was removed from service for a complete overhaul.	Moderate

Year Installed/ Implemented	Equipment Added, Process Changed, or Procedure Implemented	Minimization of Flaring
2014	The following relates to flaring from upset operations in April 2014 (FCCU). Added clarification step to the GT-701 gas turbine startup procedure after maintenance downtime that more clearly explains the fuel gas control valve lineup prior to turbine startup. Included a review of proper fuel gas control valve lineup to the gas turbines in the curriculum for the next Unit Refresher training class.	Minor
2014	The following relates to flaring from unit shutdown April 2014 (FCCU). There are no additional prevention measures that are feasible or practical which can further minimize or eliminate flaring from this event. All feasible prevention measures were incorporated to the extent feasible for the event. These immediate actions and prevention measures helped to minimize flaring but were not able to prevent the flaring event. The activities were conducted in accordance with Valero's planned procedures that were designed in part to minimize flaring.	Minor
2014	The following relates to flaring from upset operations in June and July 2014 (HPFG loss). There are no additional prevention measures that are feasible or practical which can further minimize or eliminate flaring from this event. All feasible prevention measures were incorporated to the extent feasible for the event. These immediate actions and prevention measures helped to minimize flaring but were not able to prevent the flaring event. The activities were conducted in accordance with Valero's planned procedures that were designed in part to minimize flaring.	Minor
2014	The following relates to flaring from unit startup July – August 2014 (FCCU). The FCCU C-701 shut down and start up procedures were modified to reflect proper T-102 overhead line-up.	Minor

Year Installed/ Implemented	Equipment Added, Process Changed, or Procedure Implemented	Minimization of Flaring
2014	The following relates to flaring from unit shutdown and startup August 2014 (CFHF). There are no additional prevention measures that are feasible or practical which can further minimize or eliminate flaring from this event. All feasible prevention measures were incorporated to the extent possible during the event. These immediate actions and prevention measures helped to minimize flaring but were not able to prevent the flaring event. The activities were conducted in accordance with Valero's planned procedures that were designed in part to minimize flaring.	Minor
2014	The following relates to flaring from upset operations in August 2014 (PS). The spare pump was not documented in maintenance documentation and Operations was unaware that there was a spare pump available. To resolve this gap, the cooling water pump maintenance plan was modified to include a step to install a spare pump in place of the primary pump, when it is removed for maintenance. Additionally, a sign was installed at the cooling water pump that references which pump is spare in the event the primary pump is taken out of service.	Minor
2014	The following relates to flaring from unplanned shutdown in October 2014 (HCU). • The gas turbine inspection program has been updated to include inspection of the cooling jacket (inspection of the cooling jacket for corrosion is not currently included in the inspection and repair plan). • The HCU shutdown and startup procedures will be reviewed to understand and clarify liquid hydrocarbon management to prevent upsets during startup. This may lead to improved unit restart and reduced flaring.	Minor

Year Installed/ Implemented	Equipment Added, Process Changed, or Procedure Implemented	Minimization of Flaring
2015	The following relates to flaring from unit shutdown and startup from January-March 2015 (LCNHF, NRU, HCU, HSU). There are no additional prevention measures that are feasible or practical which can further minimize or eliminate flaring from this event. All feasible prevention measures were incorporated to the extent feasible during the event. These immediate actions and prevention measures helped to minimize flaring but were not able to prevent the flaring event. The activities were conducted in accordance with Valero's planned procedures that were designed in part to minimize flaring.	Minor
2015	The following relates to flaring from unit shutdown and startup in March 2015 (HCU). To address the primary cause of the flare event due to high temperature trip while manually adjusting the hot gas bypass valve, the Night Orders have been updated with guidance on options (other than manual adjustment of the bypass valve) that may be used to reprofile reactors. To address the frozen control valve, many potential measures have been identified to improve the function of the automated control valve (such as additional inspections, procedures, and revised designs). These measures are currently under review. Feasible improvement measures will be incorporated when the control valve is repaired, rebuilt, or replaced at the next scheduled unit downtime.	Minor

Year Installed/ Implemented	Equipment Added, Process Changed, or Procedure Implemented	Minimization of Flaring
2015	The following relates to flaring from unit depressurization in July 2015 (H2U). The root cause of the PT-307 discharge check valve failure was that the flapper was not inside the valve. The check valve was repaired. Specific measures that were identified to prevent reoccurrence related to this incident include: A. Subsequent to this event, all semi lean catacarb pump discharge check valves have been designated as 'Critical Check Valves' per Corporate Process Safety Management standards. A 'Critical Check Valve' must operate reliably in order to avoid potential for catastrophic consequences including major fire, H2S, or other toxic material release, environmental incident with community impact, uncontrolled mixing of highly reactive compounds, or is integral to the overpressure protection system. 'Critical Check Valves' must be inspected, tested, and repaired within a defined frequency. An Inspection Data Management System is used to document the inspection/test/repairs. B. The 'note' in the normal procedure for switching semi lean catacarb pumps has been upgraded to a 'warning' within the procedure.	Minor

Year Installed/ Implemented	Equipment Added, Process Changed, or Procedure Implemented	Minimization of Flaring
2015	The following relates to flaring from operations in August 2015 (C-2101). A. Once C-2101A was repaired and brought online, C-2101B was pulled for maintenance. Repairs to C-2101B included replacing all valves. B. Compressor valves typically last 6–18 months depending on the gas composition being compressed. Due to the wide life span range, preemptive replacement of the valves is not feasible because it would increase the amount of time the compressor is out of service for maintenance, thereby reducing the amount of time a backup compressor is available and further increasing the probability of having both compressors out of service at the same time. C. The cause of the early August 2015 high hydrogen content in the flare gas header was investigated but a specific explanation was not found.	Minor

Year Installed/ Implemented	Equipment Added, Process Changed, or Procedure Implemented	Minimization of Flaring
2015	The following relates to flaring from operations in August 2015 (HCU). Prevention measures already complete include: A) Power supplies A and B have been replaced. B) Failed power supplies were sent to the manufacturer for analysis. Possible prevention measures currently under review and not yet complete include: A) To address the primary cause of power loss (connectivity between redundant power supplies): 1. contract an engineering firm to review the power supply design for all gas turbines to identify any connectivity issues between the primary and secondary power supplies. 2. Field verify wiring is per design for all gas turbines. Field verification can only take place during a turnaround. B) To address the contributing cause of the power loss (transistor failure due to fouling): establish a replacement interval for power supplies and develop a process to track the replacement intervals.	Minor
2015	The following relates to planned shutdown in September 2015 (CFHU). There are no additional prevention measures that are feasible or practical which can further minimize or eliminate flaring from this event. All feasible prevention measures were incorporated to the extent possible during the event. These immediate actions and prevention measures helped to minimize flaring but were not able to prevent the flaring event. The activities were conducted in accordance with Valero's planned procedures that were designed in part to minimize flaring.	Minor

Year Installed/ Implemented	Equipment Added, Process Changed, or Procedure Implemented	Minimization of Flaring
2015	The following relates to flaring from operations in October 2015 (PS). • Stop all work at the pump shop • Regarding improved warm-up/clearing facilities, an engineering evaluation determined that those would minimized damage to equipment but would not prevent a unit shutdown. For this reason, Valero has decided not to implement the project at this time.	Minor
2015	The following relates to planned startup in October 2015 (CFHU). There are no additional prevention measures that are feasible or practical which can further minimize or eliminate flaring from this event. All feasible prevention measures were incorporated to the extent possible during the event. These immediate actions and prevention measures helped to minimize flaring but were not able to prevent the flaring event. The activities were conducted in accordance with Valero's planned procedures that were designed in part to minimize flaring.	Minor
2016	The following relates to planned shutdown in January 2016 (CFHU). There are no additional prevention measures that are feasible or practical which can further minimize or eliminate flaring from this event. All feasible prevention measures were incorporated to the extent possible during the event. These immediate actions and prevention measures helped to minimize flaring but were not able to prevent the flaring event. The activities were conducted in accordance with Valero's planned procedures that were designed in part to minimize flaring.	Minor

Year Installed/ Implemented	Equipment Added, Process Changed, or Procedure Implemented	Minimization of Flaring
2016	The following relates to flaring from operations in March 2016 (C-2101). A. Expedited C-2101B repairs and brought back online B. Purchased and added to inventory, a spare SV-2113 lube oil pressure regulator to minimize compressor downtime in the event of a failure.	Minor
2016	The following relates to flaring from unplanned shutdown in March 2016 (CFHU). A. Purchased and added to inventory, a spare control valve to minimize C-601 downtime in the event of a failure. B. In order to provide necessary documentation to conduct risk assessments and to evaluate maintenance requirements under all operating scenarios, the following was added to the Unit Superintendent work scope: • Consider updating operating procedures to reflect catalyst activity, max catalyst temperature, and validate viability of once through hydrogen operation.	Minor

Year Installed/ Implemented	Equipment Added, Process Changed, or Procedure Implemented	Minimization of Flaring
2016	The following relates to flaring from operations in March 2016 (North Flare). The refinery's flare stacks were not designed with purge gas. A continuous natural gas purge would prevent oxygen intrusion and eliminate a flammable environment. A. <u>Initiated a natural gas purge to the north flare prior to restart</u> The north flare stack has an existing natural gas line near the base of the stack that was installed as a back-up source of fuel to the pilots. The location is suitable for re-purposing the line as a continuous purge. The natural gas purge was initiated on March 23, 2016, prior to the deblinding of the north flare to the flare header. B. <u>Initiated monitoring of oxygen concentration in the south flare stack</u> An existing natural gas line does not exist near the base of the south flare stack. Until a natural gas purge on the south flare system can be installed, the oxygen concentration is monitored. If above 4% O2 the DCS alarms and a nitrogen purge is turned on to reduce the oxygen concentration. C. <u>Install natural gas purge in both north and south flare drums</u> A long term project is being considered and scoped to install natural gas purges in the north and south flare seal drums above the liquid level so that all space downstream of the liquid seal is purged.	Significant

Year Installed/ Implemented	Equipment Added, Process Changed, or Procedure Implemented	Minimization of Flaring
2016	The following relates to flaring from operations in March 2016 (FCCU). A. Updated FCCU startup procedures to include a verification step that P-734 is running. B. Added the following to the Unit Superintendent work scope: include as a topic for Turnaround Communication Awareness the importance of making confirmation calls to the field before continuing the next step in the procedure.	Minor
2016	The following relates to flaring from unplanned shutdown June 2016 (FCCU). A. Surveyed refinery gas turbine inlet filters and made minor repairs. B. Created an 'acceptance criteria' for air filter system maintenance to help prevent damage. C. Revised Operator task for air filter systems to highlight the correct priority for inspections and repairs. D. Evaluated different filter brands and identified one without the paper connection between the dispensing roll and the mesh filter element for use.	Minor

4. Planned Flaring Reductions

In accordance with Regulation 12-12-401.3, this section of the FMP provides detailed descriptions of the equipment, processes, and procedures that are planned to be installed or implemented to minimize the frequency and magnitude of flaring events at the Benicia Refinery.

The items listed in this section fall into two general categories. The first category contains items that can best be described as management practices for improving the general reliability of the operations in the refinery. These practices help to identify specific changes in the field that when implemented will improve unit reliability and, among other things, will reduce flaring. The general effects of improved reliability are discussed in Section 2.3.3. However, the refinery undertook a major reliability evaluation starting in 2003 and several specific steps were outlined for implementation or evaluation to improve reliability even further.

The second category contains specific improvements such as new projects and procedures that will be implemented to directly or indirectly reduce the frequency and/or magnitude of flaring events. These specific improvements typically have been identified as an outcome of the management practice process, this FMP process, and/or the causal analysis process.

4.1 Management Practices that Result in Flare Minimization

The refinery depends on the practices discussed here to identify specific steps to directly or indirectly reduce flaring. As such they are tools needed to make the process for continuous improvement work, but the practice by itself does not necessarily have a direct and predictable impact on flaring per se. However, these tools ultimately lead to the specific identification of many individual improvements that cumulatively have a profound impact on flaring.

- **Incident Investigation Process.** All abnormal events and potential incidents are documented in a corporate-wide database (IMPACT). The primary purpose of IMPACT is to speed the distribution of lessons learned to prevent a reoccurrence. Examples of such events/incidents include safety incidents, environmental incidents (including flaring events), equipment failures, operator errors, and product quality excursions. Depending on the severity of the incident, an investigation may be required, including formation of an investigation team. An investigation is required in order to close out all environmental incidents in the IMPACT database. The investigation summarizes the pertinent facts, root cause, contributing factors, and corrective actions to prevent recurrence. Root causes are assigned using the Cause Mapping© categorization system.

This IMPACT incident and investigation process is used to implement the evaluation of cause and contributing factors, consideration of measures to minimize flaring, and recurrent failure evaluation described in Section 2.3.2 and depicted in Figure 8 – Flare Minimization Flowchart for Maintenance. Approximately 600 incidents are generated per year. The IMPACT system drives continuous improvement in personnel and operational safety, reliability and environmental compliance, and directionally reduces flaring. It is imperative to understand and learn from incidents that are outside the norm. The current version of this process, including the use of Cause Mapping© was implemented in 2011, and the system is documented in the refinery Accident Prevention Manual (APM 1-4-0).

- **Materials Operating Envelope (MOE) Reliability System.** The MOE reliability system is a management system that was identified for implementation in the refinery-wide reliability study completed in 2004/2005. The objective of the system is to eliminate equipment failures related to materials of construction failures by helping to stay within operating parameters so that corrosion is minimized. Flaring is reduced as a result of this system for two primary reasons. First, a reduction in equipment failure will reduce the frequency of emergency process unit shutdown, maintenance, and subsequent startup, all of which can cause flaring. Secondly, improved corrosion management will ultimately reduce the frequency of unplanned shutdown, maintenance, subsequent startup to correct a corrosion issues.

  With the MOE reliability system, detailed evaluations are performed on each process unit to verify that the appropriate metallurgy is in place for the materials processed and the operating conditions (pressure, temperature, etc) under which the equipment operates. The results of the MOE reviews are then incorporated into the refinery corrosion monitoring program, which is stewarded by operations and technical personnel. For example, the MOE reliability system indicated that the HCU reactor effluent piping should be inspected. The inspection found that the piping was corroding faster than anticipated. The piping was replaced with alloy lined piping during a scheduled HCU maintenance turnaround, thereby avoiding a potential unscheduled HCU downtime with associated flaring.

4.2 Specific Improvements that Result in Flare Minimization

Table 4-1 provides specific flare minimization measures for the Benicia Refinery. For each measure, the anticipated year of installation or implementation is provided. Additionally, the effectiveness of the these measures in minimizing the frequency and magnitude of flaring events is qualitatively shown as “significant”, “moderate”, or “minor”.

Table 4-1 – Planned Flaring Reductions

Year of Planned Installation/ Implementation	Planned Equipment Addition, Process Change, or Procedure Implementation	Planned Minimization of Flaring
	Currently there are no planned flaring reduction projects.	

5. Prevention Measures

In accordance with Regulation 12-12-401.4, this section of the FMP provides a discussion of prevention measures that the Benicia Refinery has considered for implementation. The discussion provides general background and specific information regarding various refinery activities that impact the recoverability of refinery fuel gas in the Flare Gas Recovery System. Based on a review of flaring that has occurred historically at the Benicia Refinery, a summary is provided of measures that the refinery has considered for minimizing flaring from maintenance activities including a determination as to the feasibility and effectiveness of the considered approaches. Where approaches have been identified as being feasible and effective they have subsequently been incorporated into normal refinery operations. Measures that have been evaluated but determined not to be feasible or effective are also discussed, along with supporting information for the infeasibility and ineffectiveness.

5.1 Prevention Measures – Maintenance Activities

In this section, refinery maintenance including startup, shutdown, and turnaround activities are discussed, and measures that have been considered to minimize flaring during planned and unplanned maintenance activities are reviewed. Section 2.2.1 provides a summary of reasons for flaring as a result of maintenance activities.

The evaluation of prevention measures to reduce flaring as a result of maintenance is primarily based upon a review of the historical causes of flaring events, especially those that have occurred during the last five years. The Benicia Refinery has expended significant effort to reduce sources of flow to the Flare Gas Header from these activities. The refinery's evaluations have concluded that modifications to operational, planning, and maintenance approaches are a more feasible and effective strategy than major capacity additions to the existing Fuel Gas Unit (as discussed in Section 5.2).

In accordance with Regulation 12-12-401.4.1, the evaluation of prevention measures presented in this section is based on a review of flaring events that have occurred during maintenance activities in the last five years. These events are presented along with a summary of the measures that have been considered, and in many cases, where practical and feasible, implemented to reduce the flow of gases to the Flare Gas Recovery System.

In this section, prevention measures are not considered for the Acid Gas Flare because there are no major maintenance activities which utilize the Acid Gas Flare. The Acid Gas Flare is primarily used for emergency and upset conditions, and some startup and shutdown conditions. Outside of emergency and upset conditions, the Acid Gas Flare has limited use. For example, during turnarounds at the SGU, various equipment, such as pumps, vessels, and exchangers, is drained, washed, and then steamed to the Acid Gas Flare. During startup and shutdown of the SGU, relatively small quantities of liquid in various lines are blown down to the Acid Gas Flare system (liquids are removed at the SGU Liquid KO Drum and gasses are sent to the Acid Gas Flare). Regular maintenance procedures for reflux pumps in sour water recirculation service require that the Acid Gas

Flare be baseloaded with fuel gas as a precaution while the pumps are being steamed, but there is no routine acid gas flow to the flare during this time.

5.1.1 Background Information Regarding Maintenance Activities

In refinery operations, maintenance activities often result in a higher than normal flow of gases to the flare gas recovery system. In order to perform maintenance activities, process equipment and the associated piping must first be cleared of hydrocarbons before the system is opened to the atmosphere. This is required for both safety and environmental reasons, including compliance with Regulation 8-10 (Process Vessel Depressurization). The approach used to clear the equipment depends on the physical properties of the hydrocarbons to be removed (e.g., vapor pressure, viscosity, and temperature), and on the configuration of the equipment that is to be maintained.

The typical first step is to recover as much of the hydrocarbon as possible by transfer to other equipment that is not in the part of the equipment that is being prepared for maintenance. For example, liquid hydrocarbons can be pumped (or transferred under pressure) to product, slop, or sour water tankage, another process unit, or liquid K.O. drums; gases under pressure may be depressurized to the tail gas system and/or Fuel Gas Unit, depending upon composition and pressure. For example, vent gas may be sent to the tail gas system if it has a high hydrogen content (about 75 percent), no olefins, and is above about 200 psig; and then sent to the Fuel Gas Unit if pressure is between 200 and 70 psig. Otherwise, hydrocarbon containing vent streams can be sent to the Fuel Gas Unit if pressure is above 70 psig. Once pressure is below 70 psig, all vent streams must be sent to the Flare Gas Header.

Heavy hydrocarbons that are viscous and/or sticky at ambient temperatures are often flushed from equipment using lighter hydrocarbons, for example light cycle oil (LCO) a diesel range material commonly used in refineries for this service. The LCO can then be pumped from the equipment.

Although depressurization and pump-out can be used to remove the bulk of the hydrocarbon from the equipment, there will generally always remain some residual material. The next step in clearing typically requires a low-pressure destination that can accept a wide range of hydrocarbon materials in order to avoid putting these materials to the atmosphere. At most refineries, including the Benicia Refinery, the Flare Gas Header is typically the preferred (and generally the only) location within the refinery that meets these criteria. Equipment containing materials that are gases at ambient temperature and pressure are normally vented to this system for potential recovery of gases as fuel gas.

Equipment is typically freed of hydrocarbons following depressurization, by purging with an inert gas such as nitrogen (or steam as discussed below). Hydrocarbons are also commonly removed by a sequence of nitrogen pressurization steps, followed by depressurization while directing the resulting mixture of nitrogen and hydrocarbon to the Flare Gas Header. Steam purging can sometimes be substituted for nitrogen purging, but not for processes that need to be kept dry in order to avoid corrosion or catalyst damage, or for other process reasons.

For equipment containing residual hydrocarbon liquid, steam or nitrogen is often used to "blow" the liquid to the knockout drums typically located near the process units. The liquid hydrocarbons (and water if steam purging is used) are then separated from the vapor phase in the knockout drum. The liquid phase is typically returned to the refinery's recovered oil system where the water is separated from the oil and sent to wastewater treatment, and the oil is re-processed in the PS, FCCU, or CKR. The gas phase, typically nitrogen with hydrocarbon vapor, continues on to the Flare Gas Recovery System. Once the bulk of the liquid hydrocarbon has been displaced, the flow of steam or nitrogen is continued to remove any residual hydrocarbon by vaporization.

If heavier hydrocarbon materials are present, different strategies are often used. Steam can be more effective than nitrogen or inert gases for heavier materials, as it increases their volatility by increasing temperature. Hot hydrogen is used in some processes to "hot strip" hydrocarbons off of catalyst beds. Proprietary solvents such as "Zyme-flow" or other chemical washing agents are also sometimes used in aqueous solution ("liquid phase chemical cleaning") for removal of residual hydrocarbons. When aqueous solvents are used, they are typically circulated in the equipment and then treated. Steam may be used in combination with a chemical cleaning agent ("vapor phase chemical cleaning") to clear heavy materials from equipment. Vapor phase chemical cleaning may also be used together with liquid phase chemical cleaning.

Implementing these procedures has resulted in the capture of significant hydrocarbon emissions related to equipment opening that previously were released untreated to the atmosphere. However, in many circumstances these practices require a high volume and high velocity flow of steam or nitrogen to be effective. High flow rates of inert gas can create several sets of circumstances where flare gas recovery may not be possible. These problems typically relate either to the change in fuel gas composition (molecular weight), condition (temperature), or high rate of flow as discussed in the following section.

5.1.2 Flaring During Major Maintenance Activities

Table 5-1 provides a summary of flaring events that have occurred as a result of major maintenance activities during the past five years. Table 5-1 was prepared by comparing flaring data and process unit records for planned turnarounds to conduct major maintenance. In Section 4.1.2, prevention measures are evaluated to minimize the flaring events identified by this five-year lookback along with any other flaring that may reasonably be expected to occur as a result of major maintenance activities.

Starting on August 20, 2005, a flaring event was defined as a vent gas flow rate 0.5 mmscfd or more and prior to this date, a flaring event was defined as a vent gas flow rate of 1 mmscfd or more. In accordance with Regulation 12-11-501, vent gas meters were installed at each flare during the first quarter of 2004. Prior to installation of these flow meters, the data used to prepare Table 5-1was obtained from flow meters that were not required or approved by the BAAQMD.

Table 5-1 - Flaring During Major Maintenance Activities – 5 Year Lookback

Date	Process Unit	Description of Activity Resulting in Flaring
January 2015 September 2013	LCNHF	During unit shutdown, hot strip vessels with H2 then N2. During unit shutdown, cool reactor (and purge downstream vessels) with N2. If necessary to meet vessel depressurization requirements (Regulation 8-10), pressure vessels with N2 then release. During unit startup, warm reactor with hot H2. During unit startup, activate catalyst with H2.
February 2013 March 2011	HCNHF	During unit shutdown, hot strip vessels with H2 then N2. During unit shutdown, cool reactor (and purge downstream vessels) with N2. If necessary to meet vessel depressurization requirements (Regulation 8-10), pressure vessels with N2 then release. During unit startup, warm reactor with hot H2. During unit startup, activate catalyst with H2.
January 2016 October 2015 September 2015 August 2014 April 2013 February 2013 November 2011	CFHU	During unit shutdown, hot strip vessels with H2 then N2. During unit shutdown, cool reactor (and purge downstream vessels) with N2. If necessary to meet vessel depressurization requirements (Regulation 8-10), pressure vessels with N2 then release. During unit startup, purge and warm reactor with N2. During unit startup, warm reactor with hot H2. During unit startup, activate catalyst with H2. During unit startup, sulfide catalyst.

Date	Process Unit	Description of Activity Resulting in Flaring
March 2013	JHF	During unit shutdown, hot strip vessels with H2 then N2. During unit shutdown, cool reactor (and purge downstream vessels) with N2. If necessary to meet vessel depressurization requirements (Regulation 8-10), pressure vessels with N2 then release. During unit startup, warm reactor with hot H2. During unit startup, activate catalyst with H2.
March 2013 June 2012	DHF	During unit shutdown, hot strip vessels with H2 then N2. During unit shutdown, cool reactor (and purge downstream vessels) with N2. If necessary to meet vessel depressurization requirements (Regulation 8-10), pressure vessels with N2 then release. During unit startup, warm reactor with hot H2. During unit startup, activate catalyst with H2.
December 2012	VNHF	During unit shutdown, hot strip vessels with H2 then N2. During unit shutdown, cool reactor (and purge downstream vessels) with N2. If necessary to meet vessel depressurization requirements (Regulation 8-10), pressure vessels with N2 then release. During unit startup, warm reactor with hot H2. During unit startup, activate catalyst with H2.

Date	Process Unit	Description of Activity Resulting in Flaring
January/March 2015 June 2014 February 2014 March 2013 November 2012 August 2012 September 2011	HCU	During unit shutdown, depressure products to the Flare Gas Header. During unit shutdown, hot strip vessels with H2 then N2. During unit shutdown, cool reactor (and purge downstream vessels) with N2. During unit shutdown, to meet vessel depressurization requirements (Regulation 8-10), pressure vessels with N2, then release. During unit startup, warm reactor with hot H2. During unit startup, activate catalyst with H2. During unit startup, sulfide catalyst. During unit startup, send off-spec products to the Flare Gas Header.
January 2015	NRU	During unit shutdown, depressure products to the Flare Gas Header. During unit shutdown, hot strip vessels with H2, then N2. During unit shutdown, to meet vessel depressurization requirements (Regulation 8-10), pressure vessels with N2, then release. During unit startup, warm reactor with hot H2 and N2. During unit startup, send off-spec products to the Flare Gas Header.

Date	Process Unit	Description of Activity Resulting in Flaring
February 2014 February 2012	DIM	During unit shutdown, depressure vessels. During unit shutdown, to meet vessel depressurization requirements (Regulation 8-10), pressure vessels with N2, then release. During unit startup, send off-spec products to the Flare Gas Header.
None in last 5 years	ALKY	During unit shutdown, depressure vessels. During unit shutdown, to meet vessel depressurization requirements (Regulation 8-10), pressure vessels with N2 then release. During unit startup, send off-spec products to the Flare Gas Header.
February 2014	CKR PS (Vacuum Column) & CFHU	During unit shutdown, depressure products to the Flare Gas Header. During unit shutdown, to meet vessel depressurization requirements (Regulation 8-10), strip vessels with steam. During unit startup, send off-spec products to the Flare Gas Header.
February 2015 February 2014 September 2013 Dec.2010/Jan. 2011	MRU HSU (Heartcut Saturation Unit)	During unit shutdown, hot strip vessels with H2, then N2. During unit shutdown, cool reactor (and purge downstream vessels) with N2. If necessary to meet vessel depressurization requirements (Regulation 8-10), pressure vessels with N2, then release. During unit startup, activate/dry catalyst with N2, then H2.

Date	Process Unit	Description of Activity Resulting in Flaring
July 2015 June 2014 April 2014 September 2013 July-August 2012	FCCU/CLE	During unit shutdown, depressure FCCU then CLE to the Flare Gas Header. During unit shutdown, to meet vessel depressurization requirements (Regulation 8-10), strip vessels with steam and N2. During unit startup, send off-spec products to the Flare Gas Header.
None in last 5 years	Refinery-Wide Turnaround	For FCCU/CLE and PS/VLE (Atmospheric Column): During unit shutdown, depressure FCCU then CLE to the Flare Gas Header. During unit shutdown, depressure PS (Atmospheric Column) then VLE to the Flare Gas Header. During unit shutdown, to meet vessel depressurization requirements (Regulation 8-10), strip vessels with steam and N2. During unit startup, send off-spec products to the Flare Gas Header. For Units other than FCCU/CLE, PS/VLE (Atmospheric Column): See the activities described in each of the above.

5.1.3 Measures Considered to Minimize or Eliminate Maintenance Flaring

In accordance with Regulation 12-12-401.4.1, prevention measures must be evaluated to minimize or eliminate flaring that can reasonably be expected to occur as a result of maintenance activities, including shutdown and startup. The Benicia Refinery has reviewed the history of its maintenance-related flaring, focusing especially on the past five years. Based on this review and as part of this FMP update, a list of maintenance-related flaring was developed and categorized by common cause (left hand column of Table 5-2). For each type of maintenance-related flaring, potential prevention measures were evaluated to determine if there are additional flare minimization or elimination practices that could be practically and feasibly implemented at the Benicia Refinery. A primary conclusion of this evaluation is that the most feasible and effective flare minimization and elimination

practices have already been implemented (see Table 3-1 in Section 3) or are planned (see Table 4-1 in Section 0).

The Benicia Refinery's reduced flaring (as documented in the executive summary) has been primarily achieved by focusing on continual improvement with respect to (1) planning and preparation for maintenance activities; (2) equipment reliability improvements which both decrease the frequency of flaring caused by emergencies and unplanned maintenance and decrease the frequency of planned maintenance by increase process unit run length between major maintenance activities; and (3) proactive initiation of production cuts to reduce fuel gas production when a fuel gas imbalance is anticipated. As a standard practice and in accordance with the FMP process, the Benicia Refinery will continually evaluate additional potential prevention measures and implement the ones that are feasible and practical.

Table 5-2 provides a summary of the Benicia Refinery's evaluation of additional prevention measures that could minimize or eliminate maintenance-related flaring than can reasonably be expected to occur. For prevention measures that have been determined to be practical and feasible, a schedule for expeditious implementation is provided in the right hand column of Table 5-2.

Table 5-2 – Evaluation of Prevention Measures to Minimize or Eliminate Maintenance Flaring

Maintenance Activity and Process Units	Description of Prevention Measure	Feasibility/ Implementation Schedule
Depressure hydrocarbon containing vessels to Flare Gas Header during shutdown of HCU, NRU, DIM, ALKY, CKR, PS, FCCU, CLE, VLE, LCNHF, HCNHF, CFHU, JHF, DHF, VNHF, ULSD, BTR, and MRU	Minimize flaring through maintenance planning and preparation (see Section 4.1.4).	Formal maintenance planning procedures were implemented in 2007 and will continue to be updated as experience is gained.
	Minimize or eliminate flaring by expanding the existing Flare Gas Recovery System.	Not cost-effective as documented in Section 4.2.2.2.
Hot strip reactors with H_2 then N_2 during shutdown of LCNHF, HCNHF, CFHU, JHF, DHF, VNHF,	Minimize flaring through maintenance planning and preparation (see Section 4.1.4).	Formal maintenance planning procedures were implemented in 2007 and will continue to be updated as experience is gained.

Maintenance Activity and Process Units	Description of Prevention Measure	Feasibility/ Implementation Schedule
ULSD, HCU, NRU, MRU, BTR, and ALKY	Recycle H_2/N_2 within the reactor and minimize that quantity of gas that is purged to the Flare Gas Header. This practice is currently utilized at the CFHU, JHF, ULSD, HCU, and NRU because these units include recycle gas compressors as an inherent part of the reactor circuit design. Therefore, consideration of this prevention measure only applies to the LCNHF, HCNHF, DHF, VNHF, MRU, BTR, and ALKY.	Based on the design of the Benicia Refinery, it is not technically feasible to recycle H_2/N_2 at the LCNHF, HCNHF, DHF, VNHF, MRU, BTR, and ALKY. These units are not designed for recycle and do not have recycle gas compressors.
	Route the low Btu gases (H_2 and N_2) to the Fuel Gas Unit and add natural gas to meet Btu specifications for fuel gas.	The use of natural gas to increase Btu content is not feasible because the quantity of natural gas needed would cause a fuel gas imbalance which would still result in flaring.
	Segregate low Btu gases (H_2 and N_2) and routine base-load flare gases. Route the low Btu gases to the flare and the routine base-load flare gases to fuel gas recovery.	Based on the design of the Benicia Refinery, it is not technically feasible to segregate the low Btu gases and routine base-load flare gases. Additionally, even if this could be accomplished, flaring would not be reduced because fuel gas needs to be added to the low Btu gases to ensure effective combustion at the flares.

Maintenance Activity and Process Units	Description of Prevention Measure	Feasibility/ Implementation Schedule
	Minimize or eliminate flaring by expanding the existing Flare Gas Recovery System.	Not cost-effective as documented in Section 4.2.2.2.
Cool reactors (and purge downstream vessels) with N_2 during shutdown of LCNHF, HCNHF, CFHU, JHF, DHF, VNHF, ULSD, HCU, MRU, BTR, and ALKY	Minimize flaring through maintenance planning and preparation (see Section 4.1.4).	Formal maintenance planning procedures were implemented in 2007 and will continue to be updated as experience is gained.
	Recycle N_2 within the reactor and minimize that quantity of gas that is purged to the Flare Gas Header. This practice is currently utilized at the CFHU, JHF, ULSD, HCU, and NRU because these units include recycle gas compressors as an inherent part of the reactor circuit design. Therefore, consideration of this prevention measure only applies to the LCNHF, HCNHF, DHF, VNHF, MRU, BTR, and ALKY.	Based on the design of the Benicia Refinery, it is not technically feasible to recycle N_2 at the LCNHF, HCNHF, DHF, VNHF, MRU, BTR, and ALKY. These units are not designed for recycle and do not have recycle gas compressors.
	Route the low Btu gases (N_2) to the Fuel Gas Unit and add natural gas to meet Btu specifications for fuel gas.	The use of natural gas to increase Btu content is not technically feasible because the quantity of natural gas needed would cause a fuel gas imbalance which would still result in flaring.

Maintenance Activity and Process Units	Description of Prevention Measure	Feasibility/ Implementation Schedule
	Segregate low Btu gases (N_2) and routine base-load flare gases. Route the low Btu gases to the flare and the routine base-load flare gases to fuel gas recovery.	Based on the design of the Benicia Refinery, it is not technically feasible to segregate the low Btu gases and routine base-load flare gases. Additionally, even if this could be accomplished, flaring would not be reduced because fuel gas needs to be added to the low Btu gases to ensure effective combustion at the flares.
	Monitor various operating parameters including fuel gas Btu content and adjust flare gas compressor operation as appropriate. The benefits and reductions in flaring must be carefully compared to the risks of recovering these low Btu gases. For example, serious consequences can occur from the impacts of low molecular weight gases on compressors and from impacts of low Btu value gas on NOX and other limits.	This prevention measure was implemented in 2008 and has been successful in increasing the volume of low Btu gasses that can be safely recovered. This technique may not be suitable in all cases and is not capable of recovering all low Btu gases. Valero will continue to evaluate additional opportunities where this technique can be safely implemented and where this technique may be enhanced to recover additional low Btu gases.
	Minimize or eliminate flaring by expanding the existing Flare Gas Recovery System.	Not cost-effective as documented in Section 4.2.2.2.

Maintenance Activity and Process Units	Description of Prevention Measure	Feasibility/ Implementation Schedule
If necessary to meet vessel depressurization requirements (Regulation 8-10), pressure vessels with N_2 then release and/or strip vessels with steam during shutdown of LCNHF, HCNHF, CFHU, JHF, DHF, VNHF, ULSD, HCU, NRU, MRU, DIM, ALKY, CKR, PS, FCCU, CLE, and VLE	Minimize or eliminate flaring through maintenance planning and preparation (see Section 4.1.4).	Formal maintenance planning procedures were implemented in 2007 and will continue to be updated as experience is gained.
	Minimize or eliminate flaring by expanding the existing Flare Gas Recovery System.	Not cost-effective as documented in Section 4.2.2.2.
Warm reactors with hot H_2 during startup of LCNHF, HCNHF, CFHU, JHF, DHF, VNHF, ULSD, HCU, NRU, MRU, and ALKY	Minimize flaring through maintenance planning and preparation (see Section 4.1.4).	Formal maintenance planning procedures were implemented in 2007 and will continue to be updated as experience is gained.
	Recycle H_2 within the reactor and minimize that quantity of gas that is purged to the Flare Gas Header. This practice is currently utilized at the CFHU, JHF, ULSD, HCU, and NRU because these units include recycle gas compressors as an inherent part of the reactor circuit design. Therefore, consideration of this prevention measure only applies to the LCNHF, HCNHF, DHF, VNHF, MRU, and ALKY.	Based on the design of the Benicia Refinery, it is not technically feasible to recycle H_2 at the LCNHF, HCNHF, DHF, VNHF, MRU, and ALKY. These units are not designed for recycle and do not have recycle gas compressors.

Maintenance Activity and Process Units	Description of Prevention Measure	Feasibility/ Implementation Schedule
	Route the low Btu gases (H_2) to the Fuel Gas Unit and add natural gas to meet Btu specifications for fuel gas.	The use of natural gas to increase Btu content is not technically feasible because the quantity of natural gas needed would cause a fuel gas imbalance which would still result in flaring.
	Segregate low Btu gases (H_2) and routine base-load flare gases. Route the low Btu gases to the flare and the routine base-load flare gases to fuel gas recovery.	Based on the design of the Benicia Refinery, it is not technically feasible to segregate the low Btu gases and routine base-load flare gases. Additionally, even if this could be accomplished, flaring would not be reduced because fuel gas needs to be added to the low Btu gases to ensure effective combustion at the flares.
	Minimize or eliminate flaring by expanding the existing Flare Gas Recovery System.	Not cost-effective as documented in Section 4.2.2.2.
Warm reactors with N_2 during startup of LCNHF, HCNHF, CFHU, JHF, DHF, VNHF, ULSD, HCU, NRU, MRU, and ALKY	Minimize flaring through maintenance planning and preparation (see Section 4.1.4).	Formal maintenance planning procedures were implemented in 2007 and will continue to be updated as experience is gained.

Maintenance Activity and Process Units	Description of Prevention Measure	Feasibility/ Implementation Schedule
	Recycle N_2 within the reactor and minimize that quantity of gas that is purged to the Flare Gas Header. This practice is currently utilized at the CFHU, JHF, ULSD, HCU, and NRU because these units include recycle gas compressors as an inherent part of the reactor circuit design. Therefore, consideration of this prevention measure only applies to the LCNHF, HCNHF, DHF, VNHF, MRU, and ALKY.	Based on the design of the Benicia Refinery, it is not technically feasible to recycle H_2 at the LCNHF, HCNHF, DHF, VNHF, MRU, and ALKY. These units are not designed for recycle and do not have recycle gas compressors.
	Route the low Btu gases (N_2) to the Fuel Gas Unit and add natural gas to meet Btu specifications for fuel gas.	The use of natural gas to increase Btu content is not technically feasible because the quantity of natural gas needed would cause a fuel gas imbalance which would still result in flaring.
	Segregate low Btu gases (N_2) and routine base-load flare gases. Route the low Btu gases to the flare and the routine base-load flare gases to fuel gas recovery.	Based on the design of the Benicia Refinery, it is not technically feasible to segregate the low Btu gases and routine base-load flare gases. Additionally, even if this could be accomplished, flaring would not be reduced because fuel gas needs to be added to the low Btu gases to ensure effective combustion at the flares.

Maintenance Activity and Process Units	Description of Prevention Measure	Feasibility/ Implementation Schedule
	Minimize or eliminate flaring by expanding the existing Flare Gas Recovery System.	Not cost-effective as documented in Section 4.2.2.2.
Activate catalyst with H_2/N_2 during startup of LCNHF, HCNHF, CFHU, JHF, DHF, VNHF, ULSD, HCU, NRU, MRU, and ALKY	Minimize or eliminate flaring through maintenance planning and preparation (see Section 4.1.4).	Formal maintenance planning procedures were implemented in 2007 and will continue to be updated as experience is gained.
	When selecting catalysts, evaluate the potential impacts on flaring between the various catalyst options. Catalyst activation does not generally result in significant flaring. Flaring as a result of catalyst activation can be significantly reduced or eliminated through maintenance planning and preparation. As a result, catalyst selection does not generally have an impact on flaring.	Formal catalyst selection procedures were implemented in 2008 and will continue to be updated as experience is gained.

Maintenance Activity and Process Units	Description of Prevention Measure	Feasibility/ Implementation Schedule
	Recycle H_2/N_2 within the reactor and minimize that quantity of gas that is purged to the Flare Gas Header. This practice is currently utilized at the CFHU, JHF, ULSD, HCU, and NRU because these units include recycle gas compressors as an inherent part of the reactor circuit design. Therefore, consideration of this prevention measure only applies to the LCNHF, HCNHF, DHF, VNHF, MRU, and ALKY.	Based on the design of the Benicia Refinery, it is not technically feasible to recycle H_2 at the LCNHF, HCNHF, DHF, VNHF, MRU, and ALKY. These units do not have recycle gas compressors and are not designed for recycle.
	Route the low Btu gases (H_2/N_2) to the Fuel Gas Unit and add natural gas to meet Btu specifications for fuel gas.	The use of natural gas to increase Btu content is not technically feasible because the quantity of natural gas needed would cause a fuel gas imbalance which would still result in flaring.
	Segregate low Btu gases (H_2/N_2) and routine base-load flare gases. Route the low Btu gases to the flare and the routine base-load flare gases to fuel gas recovery.	Based on the design of the Benicia Refinery, it is not technically feasible to segregate the low Btu gases and routine base-load flare gases. Additionally, even if this could be accomplished, flaring would not be reduced because fuel gas needs to be added to the low Btu gases to ensure effective combustion at the flares.

Maintenance Activity and Process Units	Description of Prevention Measure	Feasibility/ Implementation Schedule
	Minimize or eliminate flaring by expanding the existing Flare Gas Recovery System.	Not cost-effective as documented in Section 4.2.2.2.
Send off-spec products to the Flare Gas Header during startup of the HCU, NRU, DIM, ALKY, CKR, PS, FCCU, CLE, VLE, and MRU	Minimize flaring through maintenance planning and preparation (see Section 4.1.4).	Formal maintenance planning procedures were implemented in 2007 and will continue to be updated as experience is gained.
	During startup of FCCU and CKR, utilize multiple compressors in a staged process to slowly start the units and minimize the production of off-spec products.	Based on the design of the Benicia Refinery, it is not technically feasible to use multiple compressors during startup of the FCCU and CKR. These units do not do not have multiple compressors. Additionally, the use of multiple compressors would not reduce the production of off-spec products because startup feed rates at the FCCU and CKR are established based on the minimum feed rates to maintain a stable startup, not based on compressor operations.
	Minimize or eliminate flaring by expanding the existing Flare Gas Recovery System.	Not cost-effective as documented in Section 4.2.2.2.
Refinery-wide shutdown and startup for major maintenance at the PS or FGS	Schedule maintenance activities such that maintenance events are staggered over several years and avoid refinery-	Based on the design of the Benicia Refinery, it is not technically feasible to conduct major maintenance at the PS or FGS without a refinery-wide shutdown and

Maintenance Activity and Process Units	Description of Prevention Measure	Feasibility/ Implementation Schedule
	wide shutdowns and subsequent startups.	subsequent startup. The Benicia Refinery is very integrated for energy efficiency and tankage inventory purposes. As a result, when major maintenance is needed at the PS or FGS the remaining process units need to be shutdown. Maintenance activities at units other than the PS and FGS are staggered to minimize flaring.

5.1.4 Benicia Refinery Maintenance Planning and Preparation

In this section the role of planning and preparation is discussed as it relates to flare minimization associated with planned and unplanned maintenance activities including startup, shutdown, and turnaround activities. In recent years, the Benicia Refinery has implemented a flare minimization planning process that has become a part of the refinery's normal operating practice prior to conducting maintenance activities that may cause flaring. This pre-maintenance planning is conducted to identify practices and procedures that may help to minimize flaring. These same practices and procedures are also used to the greatest extent possible in the event of an unplanned maintenance activity. In all cases, it should be emphasized that these procedures and practices are always implemented in a manner that does not compromise the safety of refinery operations, or would present a risk of exposure to refinery personnel or the community.

5.1.4.1 Flare Minimization Planning for Planned Maintenance Activities

For planned maintenance activities at the Benicia Refinery, flare minimization planning is currently being conducted to minimize the frequency and magnitude of flaring associated with planned maintenance. This flare minimization planning process shown in Figure 8 presents the thought process logic that is followed to ensure the potential for flaring is considered before maintenance activities are conducted. Additionally, use of this flare minimization planning process ensures continuous improvement because the process includes (1) consideration of measures to minimize flaring prior to conducting planned maintenance, (2) an evaluation of causes, contributing factors, and/or lessons learned for every significant flaring event, and (3) consideration of measures to minimize future flaring after a flaring event has occurred as a result of maintenance.

Prior to conducting maintenance activities at the Benicia Refinery, potential causes of flaring are identified. These potential causes can be generally categorized as one or more of the following:

- Clearing vessels and reactors of their gas contents to the tail gas system, Fuel Gas Unit, and/or liquid KO drums
- Clearing vessels and reactors of their liquid contents to liquid KO drums.
- Hot stripping reactors with hydrogen and/or nitrogen
- Cooling or purging reactors with nitrogen
- Final clearing of vessels and reactors with nitrogen or stream to meet the BAAQMD's vessel depressurization requirements (Regulation 8-10)
- Other unit shutdown activities
- Vessel and reactor warm-up with hydrogen and/or nitrogen
- Catalyst activation/drying with hydrogen and/or nitrogen
- Routing of off-spec products to the Fuel Gas Unit and/or liquid KO drums
- Other unit startup activities
- Once potential causes of flaring have been identified during the planning process, potential flare minimization measures can be identified for possible implementation during the planned maintenance. The identification of flare minimization measures is a dynamic process and can generally be categorized as one or more of the following:
- Stage and coordinate multiple activities as appropriate to reduce the flow rate to the Flare Gas Header
- Maximize initial vessel clearing to the tail gas system and/or the Fuel Gas Unit
- Adjust the rate of nitrogen and/or hydrogen usage as appropriate to eliminate flaring or minimize the duration of flaring
- Evaluate fuel gas balance
- Utilize the second (backup) Flare Gas Compressor as appropriate if the compressor is available and there is not a fuel gas imbalance
- Check other sources that may be adding to the base-load flow rate to the Flare Gas Header
- Implement unit adjustments and production rate cuts as appropriate to reduce fuel gas production if a fuel gas imbalance is a contributing cause of flaring
- Minimize the production of off-spec products
- Other flare minimization measures

After the maintenance activities are conducted, if the flaring event exceeds 0.5 mmscfd or 500 lb/day of SO_2, a formal evaluation of cause and contributing factors is conducted and measures to minimize future flaring are considered. The results of formal evaluations and lessons learned are used during the planning process for future maintenance activities that are similar in nature.

5.1.4.2 Flare Minimization During Unplanned Maintenance and Feed Outages

There are occasions (primarily as a result of equipment malfunction) when a relatively immediate decision is made to shutdown a process unit or block of process units, typically within a period of minutes or hours, allowing very little time for planning. In these cases, it is often not possible to make all the up-front adjustments necessary to minimize flaring to the same extent as is possible when the shutdown is planned in advance. Despite this, actions that can be taken to minimize flaring are implemented to the greatest extent possible. For these cases, the refinery utilizes the same general procedures that have been developed to minimize the frequency and magnitude of flaring during maintenance events, as shown in Figure 8. The flare minimization measures that are considered for planned maintenance (listed above) are also considered for unplanned shutdowns and lessons learned are informally captured for future consideration during similar future events. If flaring events from unplanned shutdowns exceed 0.5 mmscfd or 500 lb/day of SO_2, a formal evaluation of cause and contributing factors is conducted and measures to minimize future flaring are considered.

Figure 8 – Flare Minimization Flowchart for Maintenance

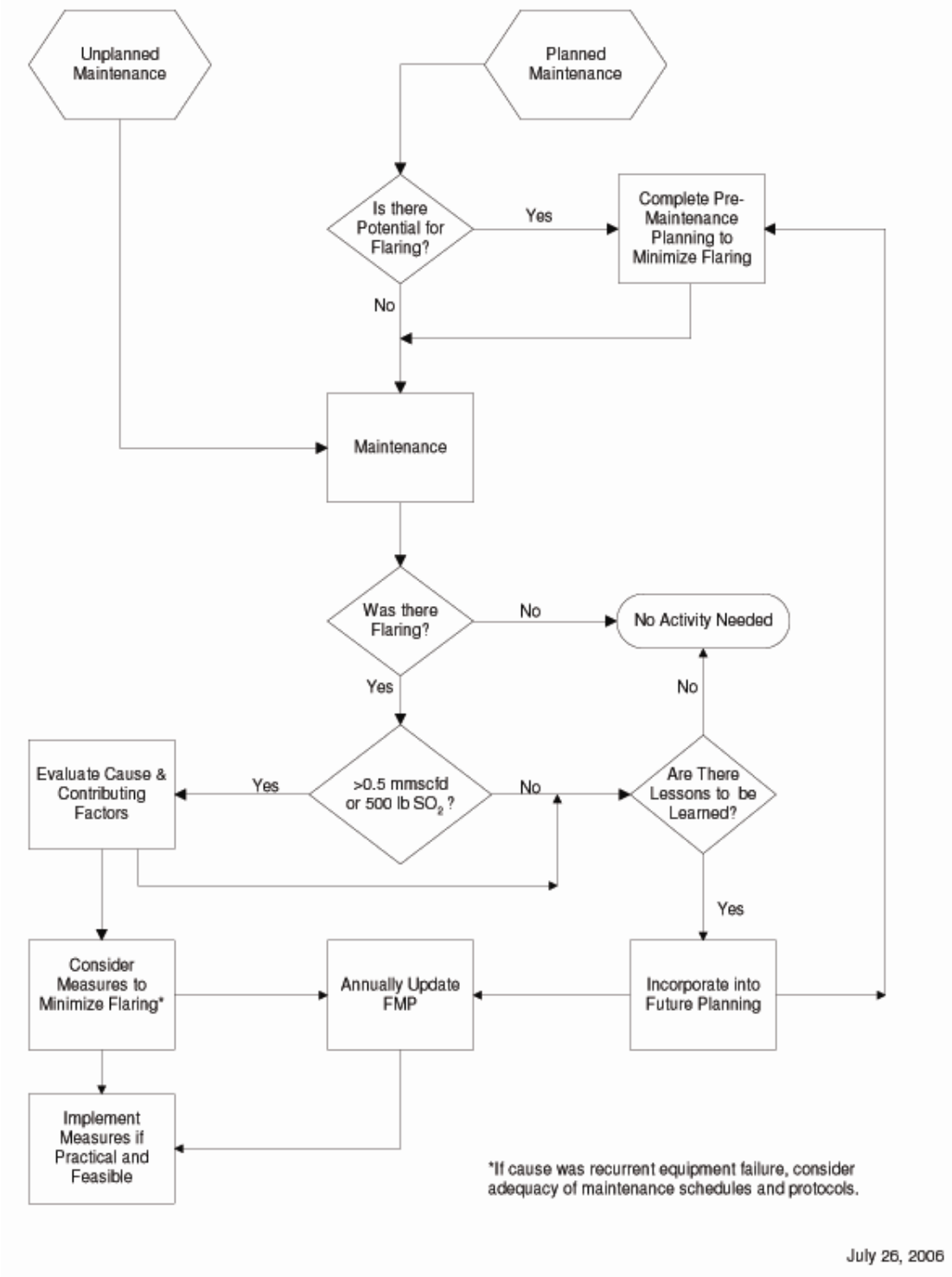

5.2 Prevention Measures – Fuel Gas Quantity and Quality

As discussed in Section 2.2.2, flaring can occur as a result of fuel gas quantity and quality issues if (1) the quantity of fuel gas generated is larger than can be managed by the Flare Gas Compressors, Fuel Gas Unit, and/or fuel gas consumers; or (2) the quality (composition) of fuel gas is such that it must be routed to the flare because it cannot be utilized by the fuel gas consumers. When flaring is caused by fuel gas quantity and quality issues, the general cause of flaring is often maintenance activities, equipment failure and malfunction, emergency situations and/or safety reasons. This section examines potential prevention measure to reduce flaring by reducing fuel gas quantity and quality issues. Specifically, this section examines both the advantages and the feasibility of adding flare gas recovery capacity.

All prevention measures that are considered in this section for fuel gas quantity and quality are focused on reducing flaring loads at the South and North Flares. Any reduced flaring associated with a particular prevention measure will result in decreased emissions of all pollutants including sulfur dioxide (SO_2) and will also result in increased treatment and recovery of sulfur containing gases. To decrease SO_2 emissions and increase treatment and recovery of sulfur containing gases, flare gas must be diverted from the flares and sent to the Fuel Gas Unit where the sulfur compounds are treated in the Fuel Gas Treatment Scrubber (T-1201). This scrubber has a maximum capacity of about 70 mmscfd of sour fuel gas and receives an average of about 50 mmscfd of sour fuel gas. The Fuel Gas Treatment Scrubber is sufficiently sized to accommodate recovered flare gas that is diverted from the flares (the 50 mmscfd average sour fuel gas flow to T-1201 includes an average of about 5 mmscfd of recovered flare gas). Additional Fuel Gas Treatment Scrubbing capacity will not reduce flaring or SO_2 emissions. Therefore, the only way to decrease SO_2 emissions is to reduce flaring.

Flaring at the Acid Gas Flare is not caused by issues of gas quantity and quality (i.e. a larger recovery and treatment system will not reduce flaring because the Acid Gas Flare does not utilize a recovery and treatment system). A recovery and treatment system for the Acid Gas Flare is not practical for several reasons. First, acid gas does not have a heating value (i.e., there are little or no hydrocarbons in acid gas), so there is no use for recovered acid gas as fuel gas. Additionally, use of the Acid Gas Flare is very limited and is primarily used for emergency and upset situations so there is normally no flow in the Acid Gas Flare Line. As such, treatment and recovery are not practical because scrubbers cannot handle flow rates between zero and the design flow rate of the Acid Gas Flare, as well as the high concentration of H_2S in the acid gas during emergencies and upsets. Finally, even if recovery and treatment were possible, it would not be warranted because utilization of the Acid Gas Flare and the resulting emissions are too small. Emergency and upset events provide the only potential for Acid Gas Flare events in excess of 0.5 mmscfd or 500 lb/day of SO_2.

5.2.1 Existing Flare Gas Recovery Capacity at Benicia Refinery

In this section the capacity of that system is reviewed in further detail, and considered in light of flaring event information from 2005. Options for possible expansion of the system

capacity are also evaluated, including the possible addition of flare gas compressor, gas treating, and/or gas storage capacity.

The capacity of a Flare Gas Recovery System is generally taken as the total installed nameplate capacity of the Flare Gas Compressor(s). Where spare units are provided that are not operated simultaneously, the spare capacity is not included as a part of total system capacity. However, Flare Gas Compressor capacity alone does not fully define the total capacity of the system in all cases. In order to recover flare gas for use at the Fuel Gas Unit, three criteria must be met. First, there must be sufficient flare gas compressor capacity. Second, there must be sufficient fuel gas scrubbing or treatment capacity. Finally, there must either be available storage volume or a user (e.g., furnace, boiler, gas turbine or COGEN) with a need for the fuel gas. If any of these conditions are not met, then the gas cannot be recovered into the fuel gas header. The capacity of the existing Flare Gas Recovery System components at the Benicia Refinery is summarized in Table 5-3.

Table 5-3 – Summary of Benicia Refinery Flare Gas Recovery System Capacity

Flare Gas Recovery System	Flare Gas Recovery Capacity	Storage Capacity	Scrubbing Capacity for Recovered Flare Gas	Total Fuel Gas Scrubbing Capacity
Main System with North and South Flares	6 mmscfd at 0 psig, 80 ^{o}F (one operating, one spare)	None	Sufficient to process recovered fuel gas	70 mmscfd total (includes all fuel gas sources)
Acid Gas Flare	None	None	None	None

The Benicia Refinery Flare Gas Recovery System does not include any dedicated capacity for storage of fuel gas or flare gas. However, on a continuous basis the refinery optimizes the producers and consumers of fuel gas to maximize the capacity available for treatment and reuse of recovered gases by employing the following strategies:

- Adjusting the sources of fuel that are made up to the Fuel Gas Unit including imported natural gas, propane, butane or other refinery marginal fuel sources;
- Adjusting the operations of units that produce fuel gas range materials (FCCU and CKR) including at times reducing severity of operations in the FCCU to reduce fuel gas production if it would put the refinery in a flaring situation, and at times reducing the feed rate to high gas producing units;
- Adjusting the refinery profile for consumption of fuel gas by ensuring the COGEN is at its maximum capacity (within constraints on exporting power), or shifting rotating equipment to steam turbine drivers (maximizes the fuel gas fired boilers).

The total fuel gas scrubbing capacity that is indicated is an integral part of the refinery fuel gas management system. This capacity is closely matched with the fuel gas consumers' (furnaces, boilers, gas turbines, and COGEN) usage requirements. The capacity indicated as being available for recovered flare gas scrubbing will vary depending on the balance between fuel gas production and consumption; it will vary both on a seasonal basis and during the course of the day.

With this system for flare gas recovery in place, the Benicia Refinery has recovered a daily average flow of 4.5 mmscfd during the 2005 calendar year. Total gases flared during that time period were an average of 0.2 mmscfd, demonstrating that the Flare Gas Recovery System effectively recovered and reused greater than 95 percent of the gases routed to the flare gas header(s) in 2005. On an annual basis, out of 1,700 mmscf total volume measured in the flare gas header, 1,630 mmscf were recovered.

5.2.2 Evaluation of Options for Additional Flare Gas Recovery, Scrubbing and Use

To address the requirements of Regulation 12-12-401.4, the Benicia Refinery has considered the feasibility of further reducing flaring through additional recovery, scrubbing, and/or storage of Flare Gas Header gases, or to use the recovered gases through other means. This evaluation considers the impact these additional systems would have on the volume of flared gases remaining in excess of what has already been recovered (as noted in the previous section), and the associated mass flow of hydrocarbons emitted after combustion in the flare control device.

5.2.2.1 Typical Flare Gas Recovery System Components

A typical Flare Gas Header is connected to both a flare gas recovery system and to one or more flares. Normally all vapor flow to the Flare Gas Header is recovered by a Flare Gas Compressor, which increases the pressure of the flare gas allowing it to be routed to a fuel gas treatment scrubber for removal of contaminants such as sulfur and then to the refinery fuel gas consumers. Gas in excess of what can be handled by the Flare Gas Compressor(s), the treatment scrubber(s), and/or the fuel gas consumers flows to a refinery flare so it can be safely disposed of by combustion. Therefore, in order to reduce the volume of gas flared, three essential infrastructure elements are required: (1) sufficient compressor capacity to increase the pressure of the gas to the point where it can be used in the refinery fuel system; (2) sufficient storage volume to dampen out the variation in volumetric flow rate to the flare gas header; and (3) sufficient capacity of treatment scrubber systems to condition the gas (primarily by removal of sulfur) for use as fuel gas.

Figure 9 shows the configuration of a typical flare gas recovery system and its components.

Figure 9 – Typical Fuel Gas Recovery System

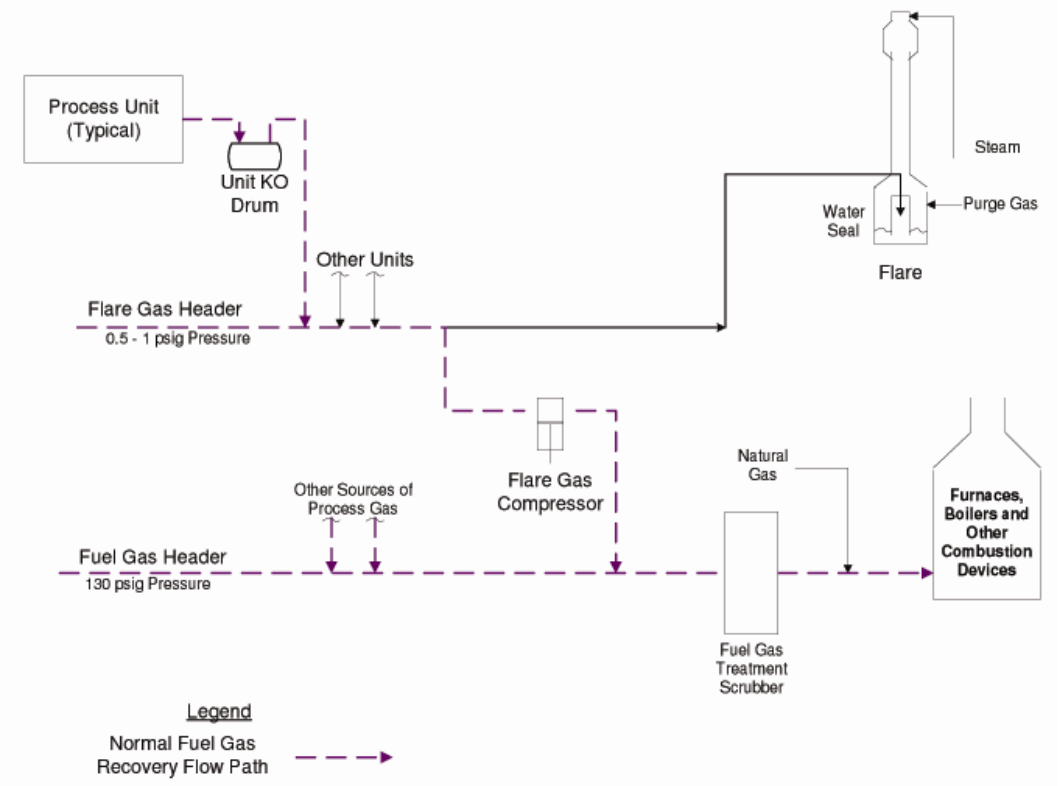

Many types of systems are used for compression of flare gas. Options include centrifugal, reciprocating, and rotary compressors, as well as liquid jet ejectors. Each of these options has advantages and disadvantages that lead to it being better suited for use under certain sets of conditions. Centrifugal compressors generally have low maintenance requirements, but are more sensitive to variation in gas properties (e.g., molecular weight) than a reciprocating machine. Reciprocating compressors, although designed to operate best with a gas that has a specific molecular weight, can operate with a range of compositions so long as inter-stage temperature limits (350 to 400 F is typical) are not exceeded. Typical maximum practical capacity for a single reciprocating compressor is about 4 mmscfd of gas at the compressor inlet. Rotary screw compressors are less expensive, but generally less reliable than other options. Liquid ring compressors are less efficient than most reciprocating or centrifugal machines, and cannot achieve as high an outlet pressure, however they have a high tolerance for variation in composition and the presence of entrained liquids. They are also less likely to go into surge mode than centrifugal or reciprocating compressors. Liquid jet ejectors are very reliable; as they have no moving parts in contact with the gas stream. They can handle a rapidly varying vapor load, but are much less efficient than other types of compressors, so have high power requirements as a result.

Options for storage of flare gas are analogous to those for storage of other refinery gases such as propane and butane. Gases can be stored at low pressure in expandable gas-holders with either liquid (water) or dry (fabric diaphragm) seals. The volumes of these systems expand and contract as gas is added or removed from the container. Very large vessels, containing up to 10 mmscf of gas can be constructed by using multiple "lifts," or stages. Gases can also be stored at higher pressures, and correspondingly lower volumes, in steel bullets or spheres, but a compressor would be required to capture the excess flare gas. The optimal pressure vessel configuration depends on system design pressure and total required storage volume.

For any type of gas storage facility, selection of an acceptable site and obtaining the permits necessary for construction both present difficulties. Despite a refinery's demonstrated commitment and strong track record with respect to safe handling of hazardous materials, the surrounding community can be expected to have concerns about any plan to store large volumes of flammable gas containing hydrogen sulfide and other sulfur compounds. Safety concerns are expected to impact site selection as well, with a relatively remote location preferred. Modifications to the recovery, storage, and treatment scrubbing of recovered refinery fuel gases are subject to the provisions and approval of federal and local regulations including Process Safety Management (PSM) and California Accidental Release Prevention Program (CalARP). Although the objective of the project would be a reduction in flaring, there are expected to be multiple hurdles along the path to a construction/land use permit.

Fuel gas treatment scrubbers are used to condition flare gas prior to combustion as fuel at furnaces, boilers, gas turbines and COGEN. Treatment scrubbing is focused on removal of sulfur compounds, with some systems improving fuel value by removing carbon dioxide as well. A range of technology options exist, most of which are based on absorption of acid gases into a "lean" amine solution with regeneration of the resulting "rich" solution by stripping at lower pressure. In order to recover additional fuel gas, it is necessary to have sufficient capacity to match the capacity of gas treating systems to the peak flow rate of the flare gas requiring treatment.

5.2.2.2 Feasibility of Expanding the Existing Flare Gas Recovery System

In order to assess the potential effect of additional flare gas recovery, a hypothetical design for an upgraded system was developed. The impact that this system would be expected to have on non-methane hydrocarbon (NMHC) emissions and other pollutants have been evaluated based on the refinery's recent flaring history from 2005. Results of this evaluation are provided for three system sizes. The budgetary level (order of magnitude) cost information provided in this section has been developed based on total installed cost data from similar installations where available, in combination with equipment vendor quotes and standard industry cost estimation procedures. Figure 10 shows the configuration of a typical flare gas recovery system, modified to increase its recovery capacity as discussed below.

Figure 10 – Flare Gas Recovery System

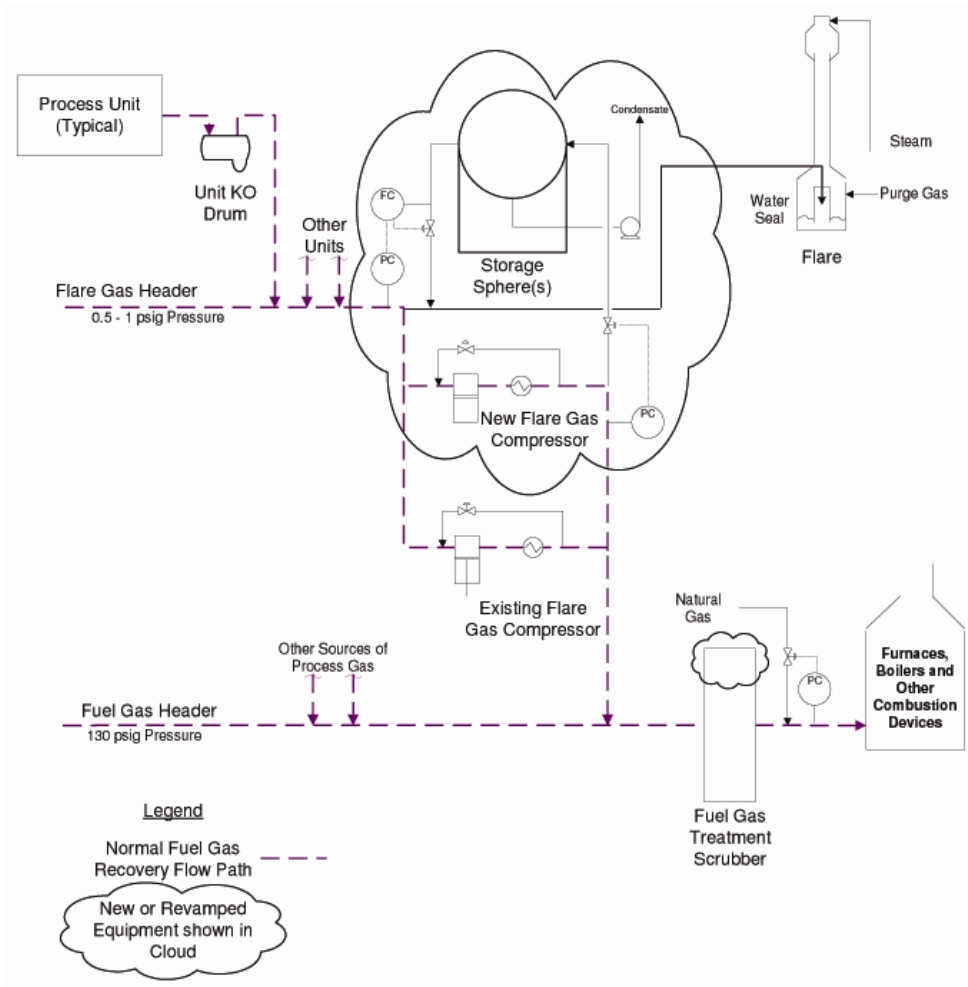

The evaluation is based on the need for installation of three new major systems in order to increase recovery of flare gases from current levels:

Additional Flare Gas Compressor capacity – the estimated cost to provide additional compressor capacity to recover flare gas flowing in the Flare Gas Header in excess of current compressor capacity, for transfer to storage and/or treatment scrubbing. Costs provided are for one un-spared compressor system to be added to the existing Flare Gas Header. The estimate is for a reciprocating compressor with all necessary appurtenances for operation, that is knock out pots, coolers, and instrumentation for a fully functional system.

Addition of surge volume storage capacity – the estimated cost to provide temporary surge storage for a portion of the gases routed to the Flare Gas Header in excess of the volumes currently being recovered, scrubbed, and consumed. The addition of temporary surge storage volume is necessary for any further increase in flare gas

recovery to allow flare gas flow (which is highly variable) to be matched to the demand for fuel gas. The cost used is based on a storage volume equal to the total volume of gas accumulated over one day at the identified flow rate, and is based on recovery in a high pressure sphere system with discharge at a controlled rate back to the flare gas header. Other lower pressure approaches were considered (low pressure gas holder, medium pressure sphere), but for the sizes analyzed a high pressure sphere was identified as the preferred approach based on operational, safety and economic considerations. For the large storage volumes needed for some of the options considered, the cost is based on the use of multiple spheres.

Additional recovered fuel gas treatment scrubbing capacity – the cost of additional amine-based treating capacity to process recovered gases for sulfur removal so that they can be burned by existing fuel gas consumers without exceeding environmental or equipment operational limits. Installed cost data for new fuel gas treatment scrubbing systems were scaled to estimate the cost of adding scrubbing capacity for each of the evaluated flow rates. The assumption is that for small increases in scrubbing capacity the existing treatment scrubber would be modified or upgraded to allow for the increase. No additional cost has been included for expansion of the sulfur recovery system (SGU and TGU), although in actual fact it could be required.

Table **5-4** provides a summary of the estimated cost for the three flare gas recovery system components described above.

Table 5-4 – Summary of Estimated Cost for Flare Gas Recovery System Expansion

Additional Capacity	Additional Fuel Compressor Capacity	New Surge Storage Capacity (1)	Additional Scrubber Capacity	Entire System(2)
2 mmscfd	$3,600,000	$5,000,000	$2,000,000	$10,600,000
6 mmscfd	$7,800,000	$15,000,000	$4,700,000	$27,500,000
24 mmscfd	$31,200,000	$60,000,000	$6,000,000	$97,200,000

(1) 24 hours of storage of the specified flow rate.

(2) 2006 cost basis. Values need not be updated for subsequent years because the cost will always increase.

To provide a more complete understanding of the potential impact of providing an expanded Flare Gas Recovery System, the following additional evaluation has been performed:

- Based on the 2005 BAAQMD inventory, 61.7 mmscf of gases were flared resulting in 25.5 tons of NMHC emissions and 17.6 tons of SO2 emissions. Emissions of NMHC and SO2 averaged 0.00083 and 0.00057 lb/scf, respectively, on this basis. Based on the EPA's Compilation of Emission Factors (AP-42), Table 13.5-1, average NOX and CO emission estimates for flaring are 0.068 and 0.37 lb/MMBtu, respectively. Based on an average heating value for flare gas equal of 1,351 Btu/scf, the average NOX and CO emission estimates are 0.000092 and 0.00050 lb/scf, respectively. Based on an average PM10 emission estimate of 0.01 lb/MMBtu provided by the BAAQMD and the average heating value listed above, the average PM10 emission estimate is 0.000014 lb/scf.
- The hourly average flaring data have been reviewed for the previous calendar year (2005) leading to the conclusion that, on an annual basis, the addition of 2 mmscfd of additional (unspared) compressor system (including storage and treating) capacity would capture approximately 33 mmscf of gases that were flared. This evaluation has been performed by totalizing the volume of gas currently routed to the flare that could be captured by a system with a flow capacity of 2 mmscfd. Refinery validated hourly data for flow to the North and South Flares were totaled for the evaluation. Flow in excess of the 2 mmscfd rated compressor capacity cannot be recovered by this system. Short duration (less than 1 hour) events have instantaneous flow rates higher than the hourly average, so the use of hourly data overestimates the volume that the system can capture. The accuracy of the cost/benefit analysis could be improved by using data averaged over a shorter time period (e.g., minutes instead of hours).
- A similar evaluation has been performed to determine the impact of adding 6 mmscfd and 24 mmscfd of additional Flare Gas Recovery System capacity. This would result in the capture of an additional 59 and 72 mmscf of flared gases on an annual basis respectively.
- Applying the average pounds of NMHC emitted per scf of flared gas to the identified reduction in flared gas volumes, the estimated reduction in NMHC emissions that could be achieved was estimated to be 13.7 tpy for 2 mmscfd additional Flare Gas Recovery System capacity, and 24.5 tpy for 6 mmscfd additional Flare Gas Recovery System capacity, and 29.9 for 24 mmscfd additional capacity.
- A similar evaluation has been performed to determine the estimated reduction in emissions of the other pollutants for each of the additional Flare Gas Recovery System capacities.
- A factor that severely limits the reduction in emissions such a recovery system would achieve in practice is the capability of the fuel gas consumers to accept these gases at the time at which they are generated (from both a volume and quality perspective). The gas storage system which has been specified for each

option is necessary if the improvements in flare gas recovery shown are to be realized.

In order to capture the gas associated with the type of longer duration flaring event that accounts for most emissions from the flares on an annual average basis, a very large capacity for flare gas compression and storage is needed. The third case presented, for a system with a capacity of 24 mmscfd, reflects what would be needed for control for this type of event. The system as proposed makes use of 6 flare gas compression systems at 4 mmscfd, each feeding one of 24 60-foot diameter storage spheres. The increase in treatment capacity is limited to 8 mmscfd, as flare gas would be stored prior to treatment and worked off through a treater at a gradual rate in line with the ability of the Fuel Gas Unit to accept it.

Based on this review the Benicia Refinery has concluded that further expansion of systems for the recovery, treatment and use of flared gases is not the most feasible and cost-effective approach to reducing these emissions. The Benicia Refinery has concluded that the major source of flared gases on a volume basis can be attributed to large flow rate flaring events, especially those of extended duration such as may occur during emergency events or prolonged shutdowns where systems within the refinery are out of fuel gas (and/or hydrogen) balance.

An evaluation of the cost-effectiveness of reducing emissions through a major Flare Gas Recovery System expansion is summarized in Table 5-5 based on the evaluations presented above for NMHC emissions. The capital cost investment has been converted to an annual basis based on BAAQMD guidelines for calculation of cost-effectiveness for Best Available Control Technology (BACT).

Table 5-5 – Summary of Estimated Cost Effectiveness for Flare Gas Recovery System Expansion Based on NMHC Emissions (2006 cost basis, actual cost in subsequent years is always greater and not necessary to recalculate)

Additional Capacity (mmscfd)	System Expansion Estimated Cost	Annualized Cost per BAAQMD Guidelines	Estimated Emissions Reduction, tpy	Estimated Cost Effectiveness, $/ton
2	$10,600,000	$2,700,000	13.7	$200,000
6	$27,500,000	$7,050,000	24.5	$300,000
24	$97,200,000	$25,050,000	29.9	$800,000

Table 5-5 shows that each of these approaches is not cost-effective. Similarly, Table 5-6 shows that these approaches are even less cost-effective for emissions of SO_2, NO_X, CO and PM10. In fact, these approaches are more than an order of magnitude less cost-effective than the typical thresholds used by the BAAQMD. Rather than

investing further capital into equipment into a cost ineffective expansion which can only infrequently recover gases, the Benicia Refinery has allocated significant resources to the development of procedures to plan for, manage, and minimize the frequency and magnitude of large flow and duration flaring events. Further resources have also been allocated effectively to ongoing preventive maintenance programs, and to further adjust refinery operations on a severity and throughput basis. These approaches have been identified to be more cost-effective, practical, and feasible than providing additional flare gas recovery capacity.

Table 5-6 – Summary of Estimated Cost Effectiveness for Flare Gas Recovery System Expansion Based on Emissions of SO_2, NO_X, CO, and PM10

Pollutant	Additional Capacity, mmscfd	Estimated Emissions Reduction, tpy	Estimated Cost Effectiveness, $/ton
SO_2	2	9.4	$300,000
	6	16.8	$400,000
	24	20.5	$1,200,000
NO_X	2	1.5	$1,800,000
	6	2.7	$2,600,000
	24	3.3	$7,600,000
CO	2	8.2	$300,000
	6	14.8	$500,000
	24	18.0	$1,400,000
PM10	2	0.2	$12,000,000
	6	0.4	$18,000,000
	24	0.5	$52,000,000

5.3 Prevention Measures – Equipment Failure and Malfunctions

As discussed in Section 2.2.3, equipment failure and malfunction including process upsets can result in flaring. Typically, these failures, malfunctions and upsets are not recurrent and, as such, are considered to be emergency conditions as defined by Regulation 12-12-201. Preventative maintenance that minimizes equipment failure is the best prevention measure for the minimization of flaring caused equipment failure. The

Benicia Refinery has developed and implemented a preventative maintenance program that minimizes the chance of recurrent failure.

5.3.1 Benicia Refinery Preventative Maintenance

The preventive maintenance program at the Benicia Refinery is a key component of the refinery's flare minimization process. The Benicia Refinery has a progressive preventive maintenance program which reduces the frequency and magnitude of equipment failures and malfunctions that can cause unplanned shutdown events that often result in flaring. There are both environmental and financial incentives for a thorough preventative maintenance program because unplanned shutdowns typically result in both production losses and flaring.

In 2004-2005, the refinery conducted a third-party, site-wide reliability assessment to identify opportunities for equipment reliability improvements. This study not only looked at the reliability of rotating and other mechanical equipment, but also assessed technical issues such as rates of corrosion and the preferred metallurgy of key system components throughout the facility.

The results of this review revealed that the reliability of the refinery's rotating equipment and compressors is, in general, excellent. For critical un-spared rotating equipment, which can be a cause of gas flow to the Flare Gas Header if an unplanned shutdown occurs, the review showed that the refinery strives for and achieves high operating reliability. This program is closely aligned with the flare minimization process. Quarterly indicators are tracked to ensure this excellent reliability is maintained and improved when opportunities are identified.

The equipment maintenance program has been implemented with the assistance of a third-party expert, Becht Engineering, with recognized expertise in equipment reliability and maintenance systems. Becht Engineering assisted in the development and implementation of written protocols and procedures. In addition to mechanical and rotating equipment, the plant's philosophy for reliability and maintenance excellence also includes other support systems, such as electrical, instrumentation, and process control systems and components.

5.3.2 Recurrent Failure

As defined by Regulation 12-12-401.4.3, a failure is considered to be recurrent if it occurs more than twice during any five year period as the result of the same cause. Over the past five years, there has been no reportable flaring events (i.e., greater than 0.5 mmscfd) at the Benicia Refinery as a result of a recurrent failure, malfunction, or upset. The preventative maintenance program described in the previous section is designed to minimize the chances of repeat failures, malfunctions, and upsets. However, if a failure, malfunction or upset does occur at the Benicia Refinery, a concerted effort is made to reduce the likelihood of a repeat event with the same cause. If repeat failures are sufficiently minimized, "recurrent" failures become unlikely.

Existing maintenance schedules and protocols implemented by the Benicia refinery are sufficient to minimize the likelihood of recurrent failure. This is demonstrated by the fact that over the past five years, there have been no recurrent failures that have resulted in reportable flaring events. As shown in Figure 8, if a recurrent failure causes a reportable flaring event, the Benicia Refinery's flare minimization efforts would include a thorough evaluation of the adequacy of maintenance schedules and protocols. With respect to flare minimization, it should be noted that effective preventative maintenance is more important than frequent preventative maintenance because many maintenance activities in and of themselves create flaring.

The Benicia Refinery has not had a recurrent failure as defined by the Regulation 12-12-401.4.3. However, on June 3 and 6, 2002, the refinery suffered two significant power disruptions that resulted in significant flaring. A substantial and thorough internal investigation was conducted that ultimately determined the root cause to be inadequate commissioning procedures for a portion of the electrical equipment associated with the startup of the new COGEN plant. Based on the results of this investigation, commissioning procedures for all of the COGEN electrical equipment were redone and verified. As a result, since that time there has not been a similar failure and subsequent flaring event. Failure investigation and implementation of subsequent corrective action are important steps that are routinely taken by the Benicia Refinery to prevent recurrent failure and the potential flaring that may result.

5.4 Prevention Measures – Use of Production Cuts to Minimize Flaring

The Benicia Refinery routinely adjusts unit operating conditions, including cuts to production rates, in an effort to minimize or eliminate flaring associated with maintenance activities, fuel gas quantity, and equipment failure and malfunction. As such, unit adjustments and production cuts have not been evaluated in Sections 5.1 through 5.3 to determine if they are a feasible prevention measure to be considered for future implementation at the Benicia Refinery (i.e., unit adjustments and production cuts are already implemented).

At the Benicia Refinery, when there is a fuel gas imbalance, flaring can be minimized or eliminated by first adjusting operating conditions and then, if needed, by cutting production rates at the FCCU and/or CKR which produce about 70 percent of the refinery's fuel gas. FCCU and/or CKR unit adjustments and production cuts result in the most significant flare minimization at the Benicia Refinery. A fuel gas imbalance can be caused by maintenance activities (e.g., shutdown of fuel gas consumers and/or production of additional fuel gas from off-spec products), non-typical refinery operating conditions (e.g., an increase in fuel gas quantity on hot days), and equipment failure and malfunction (e.g., sudden loss of a fuel gas consumer such as COGEN).

There are limitations on the use of FCCU and CKR unit adjustments and production cuts. When controlled unit adjustments and production cuts are made, it can take up to an hour or more to see measurable reductions in fuel gas production rate. Therefore, unit adjustments and production cuts may not be an appropriate response for a short-term

fuel gas imbalance unless the imbalance can be anticipated in advance. The extent to which the FCCU and CKR unit adjustments and production cuts can be made is also limited. Specified operating ranges and minimum production rates are required to maintain stable operation and avoid significant flaring that would be caused by unstable operation (or complete shutdown) of the FCCU or CKR including upstream and downstream process units.

Process unit adjustments and production cuts at process units other than the FCCU and CKR are also used to minimize or eliminate flaring. During unit startup, when off-spec products are produced, the unit's reduced production rates minimize the quantity of off-spec products that are sent to the Flare Gas Header. Additionally, during major equipment failure or malfunction, unit adjustments and production cuts at multiple refinery units are often needed to stabilize refinery operations and minimize flaring.

Unit adjustments and production rate cuts have no impact on certain flaring events. For example, these approaches will not reduce flaring caused by fuel gas quality issues, such as high nitrogen and hydrogen, when the gases in the Flare Gas Header are flared instead of being compressed and sent to the Fuel Gas Unit.

Appendix A

ALKY	Alkylation Unit
AMP	Alternative Monitoring Plan
BAAQMD	Bay Area Air Quality Management District
BAP	Benicia Asphalt Plant
BPD	Barrels Per Day
Btu	British Thermal Unit (a unit of energy)
BTR	Butamer Unit
CEM	Continuous Emission Monitor
CFHF	Cat Feed Hydrofining Unit (Hydrotreating)
CFHU	Cat Feed Hydrofining Unit (Hydrotreating)
CKR	Fluid Coking Unit
CLE	Cat Light Ends (Gas Plant)
CO	Carbon Monoxide
CO_2	Carbon Dioxide
COGEN	Cogeneration Plant (produces electric power and steam)
DHF	Diesel Hydrofining Unit
DIM	Dimersol Unit
dP	Differential Pressure
^oF	Degrees Fahrenheit
FCCU	Fluid Catalytic Cracking Unit (Cat Unit)
FG	Fuel Gas Unit
FGS	Flue Gas Scrubber
FMP	Flare Minimization Plan
GC	Gas Chromatograph
H_2	Hydrogen
H_2S	Hydrogen Sulfide
H2U	Hydrogen Unit
HCNHF	Heavy Cat Naphtha Hydrofining Unit (Hydrotreating; located at CLE)

HCU	Hydrocracker Unit
HPFG	High Pressure Fuel Gas
HPTG	High Pressure Tail Gas
ID	Inside diameter
JHF	Jet Hydrofining Unit (Hydrotreating; located at PS)
KO	Knockout
lb/day	Pounds per day
LCO	Light Cycle Oil
LCNHF	Light Cat Naphtha Hydrofining Unit (Hydrotreating; located at MRU)
LPFG	Low Pressure Fuel Gas
LPTG	Low Pressure Tail Gas
MMBtu/hr	Million British Thermal Units Per Hour
mmscfd	Million Standard Cubic Feet Per Day
MRU	Motor Gasoline Reformulation Unit (Clean Fuels Unit)
MTBE	MTBE Unit (this unit is shutdown, but a portion of the unit is used by ALKY)
N_2	Nitrogen
NMHC	Non-methane Hydrocarbons
NO_X	Nitrogen Oxides
NSPS	New Source Performance Standards
NRU	Catalytic Naphtha Reforming Unit
OMS	Oil Movements (Tank Farms and Blending)
P&ID	Process and Instrumentation Diagram
PM10	Respirable Particulate Matter (< 10 micron diameter)
PRDs	Pressure Relief Devices
PS	Pipestill (Crude Unit)
psig	Pounds Per Square Inch, Gauge
scf	Standard Cubic Feet
scfm	Standard Cubic Feet Per Minute
SGU	Sulfur Gas Unit (Sulfur Recovery Unit)
SO_2	Sulfur Dioxide
TGU	Tail Gas Unit (SGU Tail Gas/Flexsorb Unit)

tpy	tons per year
ULSD	Ultra Low Sulfur Diesel Unit (Hydrotreating)
USEPA	United States Environmental Protection Agency
UTIL	Utilities Unit
VLE	Virgin Light Ends (Gas Plant)
VNHF	Virgin Naphtha Hydrofining (Hydrotreating; located at PS)
WWT	Wastewater Treatment Plant

Appendix B

The following drawings are included in this appendix:

36-000-03E-73503 – Refinery Flare Gas Recovery System

36-000-03E-73504 – Acid Gas Flare

Appendix B of this FMP contains refinery confidential information and are trade secrets and confidential business information (CBI) of Valero Refining Company – California (Valero) as defined by the California Public Records Act, Government Code Section 6254.7 et seq., and the Freedom of Information Act, 40 CFR Part 2 (40 CFR §2.105(a)(4)), 5 USC 552(b)(4), and 18 USC 1905. Because of the sensitive and competitive nature of the information, Valero requests that the BAAQMD afford the information CBI status and treatment indefinitely. The content of Appendix B in the public version of this FMP has been redacted. A complete copy of the FMP, including Appendix B, is included in the CBI version of the FMP provided to the BAAQMD.

Appendix C

The following drawings are included in this appendix:

112-KE-31	Fuel Gas, Fuel Oil, Flare, Close Drain & Clearing Facilities (H-Header) Distribution (D-2101 Liquid KO Drum)
114-KE-9	Safety Facilities (D-2103 & D-2104 Liquid KO Drums)
116-KE-12	Compressor Row Safety Facilities (D-2102 & D-2113 Liquid KO Drums)
117-KE-4B	Utility Distribution Flare System & Mist Oil (D-2107 SGU Liquid KO Drum)
122-KE-2	Fuel Gas Scrubbing and Compression (T-1201 Fuel Gas Treatment Scrubber)
131-KE-M2	Avenue “H” Pipeway; Interconnecting Lines (Sampler Tie-Ins)
131-KE-G1B	South Flare & OM&S Pipeway Interconnecting Lines (Ultrasonic Flow Meter, South Flare)
131-KE-G2B	South Flare, Sulfur Storage & OM&S Pipeway Interconnecting Lines (Ultrasonic Flow Meter, Acid Gas Flare)
131-KE-21B	Pipeway; Upper Level Interconnecting Lines (Ultrasonic Flow Meter, North Flare)
136-KE-7	South Flare System (South Flare, D-2105 Water Seal Drum, Acid Gas Flare, D-2106 Water Seal Drum, & D-2108 Liquid Accumulator Drum)
136-KD-7A	South Flare System at Flare Gas Compressors (Flare Line Tie-Ins)
136-KD-7B	South Flare System Automated Flare Sampling System
136-KD-7C	South Flare System IGN-2101 Flare Pilot Igniter (South Flare & Acid Gas Flare)
136-KE-8	North Flare Facilities (North Flare & D-2112 water Seal Drum)
36-000-03E-03537	C-2101 A Flare Gas Compressor Process & CTW
36-000-03E-09060	C-2101 B Flare Gas Compressors
36-000-03E-09061	C-2101 A/B Flare Gas Compressors
43-000-03D-17468	MTBE Production Facilities Flare Blowdown Drum (D-2131 Liquid KO Drum)

44-000-03D-30869 MRU Blowdown Drum, Slop Oil Pumpout Pumps & Blowdown Cooler (D-2130 Liquid KO Drum)

Appendix C of this FMP contains refinery confidential information and are trade secrets and confidential business information (CBI) of Valero Refining Company – California (Valero) as defined by the California Public Records Act, Government Code Section 6254.7 et seq., and the Freedom of Information Act, 40 CFR Part 2 (40 CFR §2.105(a)(4)), 5 USC 552(b)(4), and 18 USC 1905. Because of the sensitive and competitive nature of the information, Valero requests that the BAAQMD afford the information CBI status and treatment indefinitely. The content of Appendix C in the public version of this FMP has been redacted. A complete copy of the FMP, including Appendix C, is included in the CBI version of the FMP provided to the BAAQMD.