PL-1 D 01501

Philadelphia Refinery

PHILADELPHIA
ENERGY SOLUTIONS

SOURCE REGISTRATION
AIR MANAGEMENT SERVICES

SEP 04 2015

RECEIVED

Philadelphia Energy Solutions
Refining and Marketing LLC
3144 Passyunk Avenue
Philadelphia, PA 19145-5299
215-339-2000

HAND DELIVERED

September 4, 2015

Mr. Edward Wiener
Chief, Source Registration
Air Management Services
321 University Avenue
Philadelphia, PA 19104

Re: Philadelphia Energy Solutions Marketing and Refining LLC (PES)
Title V Permit No. V06-016
Revised Plan Approval Application: Tier 3 Project

Dear Mr. Wiener:

Enclosed are three copies of a revised Plan Approval Application plus an additional check for $1,700 for the Tier 3 Project. The additional $1,700 check is for the 870 H-3 Heater that is subject to NSPS Subpart Ja. This federally mandated project requires changes to several process units at the Philadelphia Energy Solutions (PES) Refining and Marketing LLC Philadelphia Refining Complex Point Breeze and Girard Point Refineries. These project changes will allow additional sulfur treatment of gasoline components so that the refinery's gasoline product will meet USEPA's Tier 3 requirements by the January 1, 2017 deadline.

Please review this application and let me know if you have any questions or would like to meet. Please contact me at 215-339-2074.

Respectfully,

Charles D. Barksdale, Jr.
Site Environmental Director

CBD/dc

D92115604

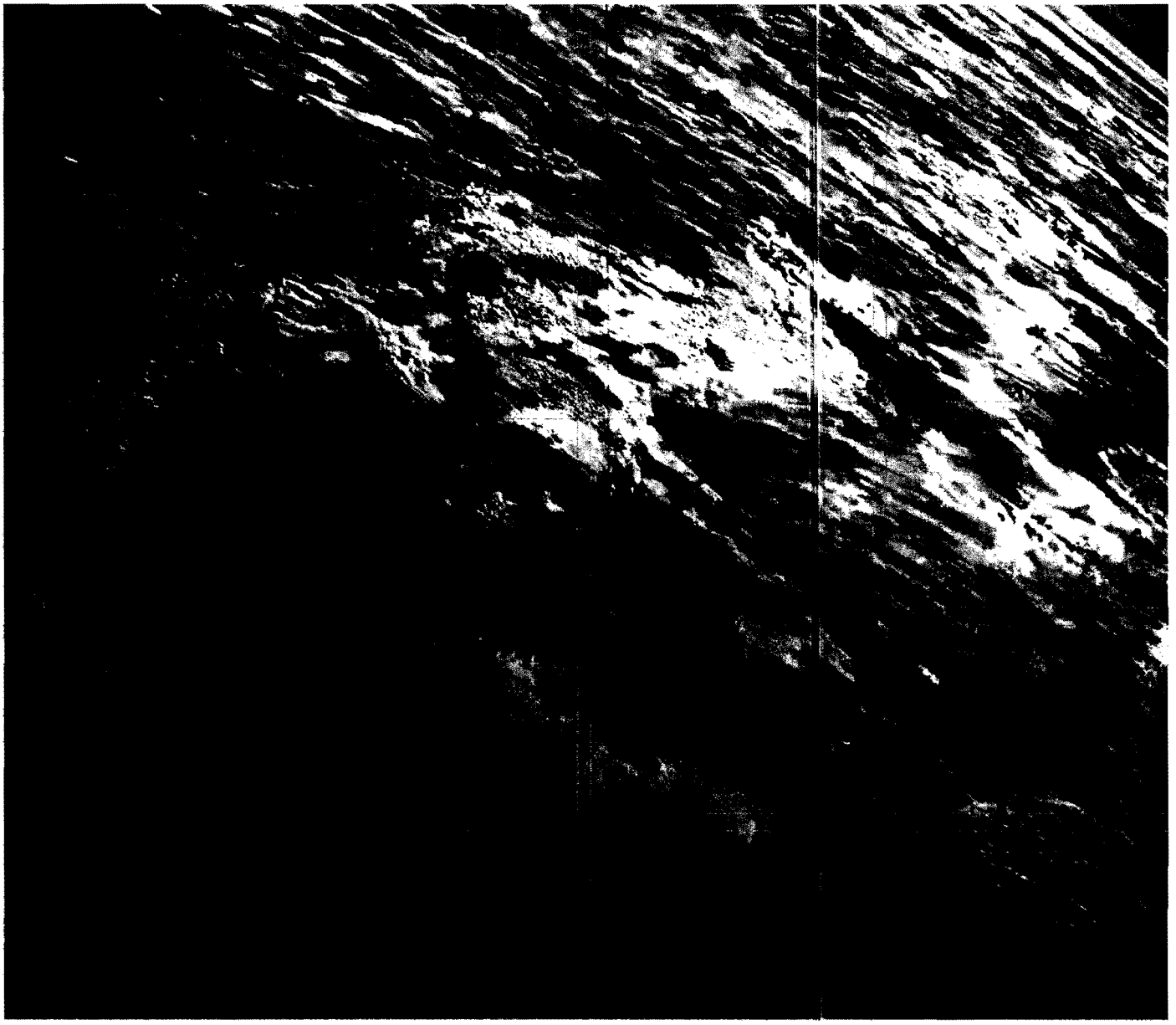

PHILADELPHIA ENERGY SOLUTIONS

Philadelphia Energy Solutions Refining and Marketing LLC

Tier 3 Project
Philadelphia, Pennsylvania

September 2015

Environmental Resources Management
75 Valley Stream Parkway, Suite 200
Malvern, PA 19355
(484) 913-0300

www.erm.com

The world's leading sustainability consultancy

ERM

TABLE OF CONTENTS

1.0 INTRODUCTION 1

1.1 TIER 3 GASOLINE 1

1.2 PES TIER 3 PROJECT 2

1.3 PLAN APPROVAL APPLICATION CONTENT 3

2.0 PROJECT OVERVIEW 4

2.1 UNIT 864 NAPHTHA HYDROTREATING UNIT 4

2.2 UNIT 870 LSG UNIT 4

2.3 UNIT 1332 HYDROBON STRIPPER AND PRE-FRACTIONATOR 5

2.4 ANCILLARY SOURCES AND UTILITIES 6

2.5 NEW FUGITIVE EMISSIONS COMPONENTS 6

2.6 PROJECT SCHEDULE 6

3.0 DETAILED PROJECT EMISSIONS ANALYSIS 8

3.1 UNIT 864 NAPHTHA HYDROTREATING UNIT EMISSIONS 9

3.2 UNIT 870 LSG UNIT EMISSIONS 11

3.3 UNIT 1332 HYDROBON STRIPPER AND PRE-FRACTIONATOR EMISSIONS 12

3.4 ANCILLARY SOURCES AND UTILITIES EMISSIONS 13

3.4.1 Incremental Cooling Water Emissions 13

3.4.2 Incremental Sulfur Production Emissions 14

3.5 FUGITIVE EMISSIONS - PIPING COMPONENTS 15

3.6 TOTAL PROJECT EMISSIONS 15

4.0 NEW SOURCE REVIEW APPLICABILITY 17

4.1 GREENHOUSE GAS TAILORING RULE 17

4.2 PREVENTION OF SIGNIFICANT DETERIORATION ANALYSIS 18

4.3 NONATTAINMENT NEW SOURCE REVIEW ANALYSIS - OZONE 19

5.0 BAT DETERMINATION 22

5.1 NO_X CONTROLS 23

5.2 CO CONTROLS 24

5.3 $PM/PM_{10}/PM_{2.5}$ CONTROLS 25

5.4 SO_2 CONTROLS 25

5.5 VOC CONTROLS 26

6.0 APPLICABLE STANDARDS ANALYSIS 28

6.1 AIR MANAGEMENT SERVICES REGULATIONS 28

6.2 FEDERAL NESHAPS (40 CFR PART 63) 28

6.3 FEDERAL NSPS (40 CFR PART 60) 29

6.3.1 Replacement Unit 864 PH-7R Heater 29

6.3.2 Unit 870 H-2 Heater 29

6.3.3 New Unit 870 H-3 Heater 30

6.3.4 Other Affected Heaters 30

LIST OF TABLES

1-1 USEPA Estimates of Nationwide Emissions Reductions from the Tier 3 Standards

2-1 Fugitive Equipment Components

3-1 Expected and Potential Firing Rates of Each Affected Heater

3-2 Projected Unit 864 Naphtha Hydrotreating Unit Heater Emissions

3-3 Unit 864 PH-7 Heater Shutdown Emissions

3-4 Projected Unit 870 LSG Unit Heater Emissions

3-5 Projected Unit 1332 Hydrobon Stripper and Pre-Fractionator Incremental Emissions

3-6 *Projected Incremental Cooling Water Emissions*

3-7 *Projected Incremental Sulfur Production Emissions*

3-8 *Projected Fugitive Component Emissions*

3-9 *Total PES Tier 3 Project Emissions*

4-1 *PSD Emissions Analysis (Step 1)*

4-2 *NANSR Netting Analysis for NO_x and VOC Emissions (5 calendar year)*

4-3 *NANSR Netting Analysis for NO_x and VOC Emissions (10 year)*

5-1 *Affected Heater Construction Dates*

LIST OF ATTACHMENTS

A *AMS Plan Approval Application Forms*

B *Site Location Map/Process Flow Diagrams*

C *Back-up Emissions Calculations*

D *Contemporaneous Emissions Tables*

E *Best Available Technology NO_x Control Cost Effectiveness Calculations*

1.0 INTRODUCTION

Philadelphia Energy Solutions Refining and Marketing, LLC (PES) owns and operates the Philadelphia Refining Complex (Complex) - including the Point Breeze Refinery, Girard Point Refinery, and the Schuylkill River Tank Farm. At the Philadelphia Refining Complex, PES is currently permitted to operate numerous desulfurization and hydrotreating processes at the Refinery under an existing permit (Title V Operating Permit No. V06-016). PES plans to reconfigure existing process units, re-route intermediate process streams, and expand hydrotreating process capacity to enable compliance with the Tier 3 gasoline standards. For the purpose of this application, the project is referred to as the "PES Tier 3 Project" or "Project."

1.1 TIER 3 GASOLINE

The United State Environmental Protection Agency (USEPA) promulgated new standards for the sulfur content in gasoline in April 2014 referred to as the Tier 3 standards. Under the Tier 3 standards, gasoline will be required to meet an annual average standard of 10 parts per million by weight (ppmw) of sulfur by January 1, 2017. These standards are an extension of the Tier 2 standards, promulgated in February 2000, which required gasoline to meet an annual average standard of 30 ppmw.

USEPA estimates that the following nationwide reductions from onroad vehicles in **Table 1-1** below in nitrogen oxides (NO_x), volatile organic compounds (VOC), carbon monoxide (CO), direct particulate matter less than 2.5 microns ($PM_{2.5}$), and sulfur dioxide (SO_2) in 2018 and 2030.

Table 1-1 ***USEPA Estimates of Nationwide Emissions Reductions from the Tier 3 Standards***

Pollutant	2018		2030	
	Tons	% of Onroad inventory	Tons	% of Onroad inventory
NO_x	264,369	10	328,509	25
VOC	47,504	3	167,591	16
CO	278,879	2	3,458,041	24
$PM_{2.5}$	130	0.1	7,892	10
SO_2	14,813	56	12,399	56

1.2 *PES TIER 3 PROJECT*

PES is proposing to make several operational and process changes to comply with the Tier 3 standards. The PES Tier 3 Project includes expansion of the sulfur removal capacity of the Unit 864 Naphtha Hydrotreating Unit and the Unit 870 Low Sulfur Gasoline (LSG) Unit at the Point Breeze Refinery as well as piping changes at the front end of the Unit 1332 Reformer Unit at the Girard Point Refinery. The changes will allow additional sulfur treatment, but not additional production, of finished gasoline, straight run naphtha, and other gasoline blending streams currently generated and processed at the refinery.

Proposed changes associated with the PES Tier 3 Project including the following:

- Expand the capacity of the Unit 864 Naphtha Hydrotreating Unit from 40 thousand barrels per day (MBPD) to a nominal 48 MBPD;
- Expand the capacity of the Unit 870 LSG Unit from 65 MBPD to a nominal 84 MBPD;
- Utilize the existing Unit 1332 hydrobon reactor to produce sweet naphtha for gasoline blending;
- Utilize vacuum deaerated water in the existing Unit 433 Alkylate Water Wash Tower[1] to remove water soluble sulfolane from alkylate products;
- Installation of low NO_x burners (LNB) on the Unit 864 PH-1, Unit 864 PH-11, Unit 864 PH-12 refinery fuel gas fired heaters;
- Replacement of the Unit 864 PH-7 Heater with an idle heater from the former Sunoco Inc. (R&M) Eagle Point Refinery; and
- Installation of a new Unit 870 H-3 Heater.

The proposed installations are fully described in this permit application submitted to Air Management Services (AMS) by PES. PES has evaluated the emission changes associated with this Project and determined that the provisions of the Prevention of Significant Deterioration (PSD) do not apply;

[1] Note the use of vacuum deaerated water in the Unit 433 Alkylate Water Wash Tower process does not introduce air pollutant emissions to the atmosphere; therefore, it will not be discussed further in this plan approval application.

however, nonattainment New Source Review (NANSR) regulations are triggered by this Project.

1.3 *PLAN APPROVAL APPLICATION CONTENT*

This plan approval describes the proposed new sources and regulatory analysis related to the PES Tier 3 Project. A more detailed description of the Project and the emissions associated with the Project are provided in Sections 2 and 3, respectively. A summary of the results of PSD and NANSR applicability analysis are presented in Section 4. The Best Available Technology Review is provided in Section 5. Reviews of applicable local, State and federal regulatory requirements are presented in Sections 6. Additional Project-related information is provided in the attachments as follows:

- AMS Plan Approval Application Forms (Attachment A);
- Site Location Map/Process Flow Diagrams (Attachment B);
- Back-up Emission Calculations (Attachment C);
- Contemporaneous Emissions Tables (Attachment D); and
- Best Available Technology NO_x Control Cost Effectiveness Calculations (Attachment E).

2.0 *PROJECT OVERVIEW*

In this Project, PES is proposing to make operational and process changes to further desulfurize existing gasoline, straight run naphtha and other gasoline blending streams to meet the Tier 3 standards in the future. The expansions of the Unit 864 Naphtha Hydrotreating Unit and Unit 870 LSG Unit as well as the piping changes to the Unit 1332 hydrobon stripper and pre-fractionator are discussed in the sections below.

2.1 *UNIT 864 NAPHTHA HYDROTREATING UNIT*

In this Project, PES plans to expand the capacity of the Unit 864 Naphtha Hydrotreating Unit from 40 MBPD to a nominal 48 MBPD by re-traying towers; re-piping and re-routing streams within the unit; replacing or modifying charge, bottoms, and reflux pumps; and modifying and replacing fired heaters. An overall process flow diagram of the proposed changes to the Unit 864 Naphtha Hydrotreating Unit is included in **Attachment B**.

As a result of this Project, all fired heaters (Unit 864 PH-1, Unit 864 PH-11, and Unit 864 PH-12) associated with the Unit 864 Naphtha Hydrotreating Unit are expected to have increased utilization. Furthermore, PES will be replacing the existing Unit 864 PH-7 Heater (nominal firing duty of 45.0 million British Thermal units per hour [MMBtu/hr]) with an existing idle heater (LSG H-1) located at the former Sunoco Inc. (R&M) Eagle Point Refinery in New Jersey[2]. The replacement Unit 864 PH-7R Heater will include ultra-low NO_x burners (ULNB) for NO_x control and will have nominal firing duty of 70.0 MMBtu/hr.

As part of the Project, PES also plans to install LNB on the existing Unit 864 PH-1, Unit 864 PH-11, and Unit 864 PH-12 Heaters.

2.2 *UNIT 870 LSG UNIT*

The Unit 870 LSG Unit currently operates two parallel desulfurization trains with two reactors in series in each train to remove sulfur from fuels. In this Project, PES plans to expand the capacity from 65 MBPD to 84 MBPD by installing a new splitter tower between the reactors where splitter tower light ends will go to gasoline blending while the splitter tower bottoms will

[2] Sunoco Inc. (R&M) Eagle Point Facility (55781) Emission Unit U45.

be further desulfurized by the remainder of Unit 870 LSG Unit. The new splitter tower reboiler will require the installation of a new refinery fuel gas fired heater, Unit 870 H-3 Heater, with a nominal firing duty of 110.0 MMBtu/hr equipped with ULNB for NO_x control. Other changes include adding pumps; re-routing piping; and installing new heat exchangers within the unit to allow for the expanded capacity. An overall process flow diagram of the proposed changes to the Unit 870 LSG Unit is included in **Attachment B**.

Also, as a result of this Project, both fired heaters (Unit 870 H-1 and Unit 870 H-2) associated with the Unit 870 LSG Unit are expected to have increased utilization, which will remain within each heater's existing firing rate limit. Both heaters currently have ULNB installed for NO_x control. However, it was determined during the design phases for the Unit 870 LSG Unit that the existing ULNBs installed in the Unit 870 H-2 Heater will be replaced with a newer version of the same ULNB. Both the maximum firing capacity (MMBtu/hr) and NO_x emission rate (lb/MMBtu) of the Unit 870 H-2 Heater will be unaffected by the change.

2.3 *UNIT 1332 HYDROBON STRIPPER AND PRE-FRACTIONATOR*

The 1332 Reformer Unit includes the pre-fractionator, hydrobon reactor system, hydrobon stripper system, and reformer/platformer. PES has determined that piping changes around the Unit 1332 hydrobon reactor system can be made to allow the unit to produce sweet naphtha for gasoline blending. To accomplish this, PES plans to re-route a portion of the hydrobon stripper bottoms to sweet naphtha storage tanks and re-route the pre-fractionator overhead to the Unit 864 Naphtha Hydrotreating Unit for further processing. An overall process flow diagram of the proposed changes to the Unit 1332 hydrobon stripper and pre-fractionator is included in **Attachment B**.

The changes listed above will not increase the overall capacity of the Unit 1332 Reformer Unit; however, both the Unit 1332 H-2 (ULNB currently installed) and Unit 1332 H-3 Heaters are expected to have increased utilization as a result of the Project. Furthermore, the type of material stored and the overall throughput of the sweet naphtha storage tanks will not be affected by this Project.

2.4 *ANCILLARY SOURCES AND UTILITIES*

The PES Tier 3 Project will expand the gasoline hydrotreating capacity of the Complex thus expanding the incremental utilization of ancillary utilities such as steam generating sources, cooling towers, and the Unit 867 Sulfur Recovery Unit (SRU) relative to their baseline period. The following approximate impacts from ancillary sources and utilities are expected as a result of the Project:

- 600 gallons per minute (gpm) of incremental cooling water will be required at the Unit 864 Naphtha Hydrotreating Unit, which will be processed by the existing Unit 864 Cooling Tower; and

- 0.45 tons per day (TPD) of incremental sulfur production as a result of additional sulfur being removed from finished gasoline, straight run naphtha, and other gasoline blending streams.

2.5 *NEW FUGITIVE EMISSIONS COMPONENTS*

Additional fugitive emissions components including valves, pressure relief devices, and flanges/connectors associated with the proposed changes will be installed as a part of this Project. A conservatively estimated list of fugitive components planned for this Project is summarized in **Table 2-1** below.

Table 2-1 Fugitive Equipment Components

Equipment	Number of Components
Valves	125
Flanges	250
Connectors	-
Pump Seals	13
Other	-

2.6 *PROJECT SCHEDULE*

PES is planning to make the proposed changes to refinery units during scheduled turnarounds starting in the fourth quarter 2015. As noted above,

construction must begin as soon as possible to ensure the Complex is producing Tier 3 gasoline by January 1, 2017.

3.0 *DETAILED PROJECT EMISSIONS ANALYSIS*

This section describes the calculations and assumptions made to estimate the emissions associated with PES Tier 3 Project. The emissions from the proposed Project including nitrogen oxides (NO_x), nitrogen dioxide (NO_2), sulfur dioxide (SO_2), carbon monoxide (CO), volatile organic compounds (VOC), particulate matter (PM), particulate matter less than 10 microns (PM_{10}), particulate matter less than 2.5 microns ($PM_{2.5}$), lead, and greenhouse gas (GHG) emissions (shown as carbon dioxide equivalents [CO_2e]) are detailed below. **Table 3-9** at the end of this section shows the total PES Tier 3 Project emissions. Detailed emissions calculations are presented in **Attachment C**.

PES has determined that certain emissions sources associated with the Unit 864 Naphtha Hydrotreating Unit and Unit 870 LSG Unit have been "modified" due a physical change or a change in the method of operation of the source. In the case of this Project, due to the expansion of treating capacity of both units, the following fired heaters will have a change in the method of operation as defined in 25 PA Code §121.1:

- Unit 864 PH-1 Heater;
- Unit 864 PH-11 Heater;
- Unit 864 PH-12 Heater;
- Unit 870 H-1 Heater; and
- Unit 870 H-2 Heater.

The emissions changes from the modified heaters are calculated as the difference between the baseline actual emissions (BAE) and the future projected actual emissions (PAE). As per 25 PA Code §127.203a(a)(4)(i) and 40 Code of Federal Regulations (CFR) §52.21(b)(48), BAE were estimated as the highest annual average "during a consecutive 24-month period selected by the owner or the operator within the 5-year period immediately prior to the date a complete plan approval application is received by the Department." Furthermore, the PAE for each modified fired heater are based on the existing hourly firing limits found in Title V Operating Permit No. V06-016 and the RACT Plan Approval issued February 19, 2014.

Note that the Unit 864 PH-7 Heater will be replaced with a heater from the former Sunoco Inc. (R&M) Eagle Point Refinery, which will be considered a

new emissions source for PSD and NANSR purposes. The new splitter tower reboiler at the Unit 870 LSG Unit will require the installation of the new Unit 870 H-3 Heater. The Unit 864 PH-1 Heater has demonstrated an inability to operate at its current potential firing rate of 80.0 MMBtu/hr; therefore, the potential firing rate will be reduced to 74.9 MMBtu/hr. Lastly, the Unit 1332 H-2 and Unit 1332 H-3 Heaters are only expected to experience an increase in utilization as a result of this Project and are not being physically modified or debottlenecked.

The annual average expected firing rates and potential firing rates of each fired heater affected by the PES Tier 3 Project are shown in **Table 3-1** below.

Table 3-1 Expected and Potential Firing Rates of Each Affected Heater

Fired Heater	Annual Average Expected Firing Rate (MMBtu/hr)	Potential Firing Rate (MMBtu/hr)[1]
Unit 864 PH-1	47.8	74.9
Unit 864 PH-7[2]	56.3	70.0
Unit 864 PH-11	58.9	74.0
Unit 864 PH-12	63.0	85.1
Unit 870 H-1	91.2	97.0
Unit 870 H-2	49.9	53.0
Unit 870 H-3[3]	103.7	110.0
Unit 1332 H-2	43.8	60.0
Unit 1332 H-3	28.1	43.0

[1] With the exception of the Unit 864 PH-1, Unit 864 PH-7R, and Unit 870 H-3 Heaters, the potential firing rates match the existing hourly firing rate limits found in Title V Operating Permit No. V06-016 and the RACT Plan Approval issued February 19, 2014.

[2] This heater will be replaced with the existing LSG H-1 Heater from the former Sunoco Inc. (R&M) Eagle Point Refinery.

[3] This will be a new heater installed to provide the necessary heat for the new splitter tower reboiler.

3.1 UNIT 864 NAPHTHA HYDROTREATING UNIT EMISSIONS

The reconfiguration of the Unit 864 Naphtha Hydrotreating Unit will increase emissions from the Unit 864 PH-1, Unit 864 PH-11, and Unit 864 PH-12 Heaters. The BAE are based on the actual firing from each of these heaters during the period of June 2012 through May 2014. The annual emission changes in this Project reflect the difference between past actual emissions (BAE) and future projected actual emissions (PAE) based on the existing hourly firing rate limits.

This Project will result in an increase in firing of certain heaters; however, it is not expected to have an impact on the amount of sulfur in the refinery fuel gas, which is the only fuel for refinery heaters. Therefore, SO_2 emissions are calculated using heater-specific SO_2 emission factors based on average actual firing rates and average actual SO_2 emissions from 2013 and 2014. Consistent with historic practices, PES used USEPA AP-42 emission factors for VOC, PM, PM_{10}, $PM_{2.5}$, and CO. The CO_2e emissions were calculated using emission factors from the Greenhouse Gas Mandatory Reporting Rule (GHGMRR) codified at 40 CFR Part 98.

The Unit 864 PH-7 Heater is being replaced with an idle heater (LSG H-1) located at the Eagle Point Refinery; therefore, there are no past actual emissions associated with this source and PAE will be based on the source's potential to emit (PTE). This replacement heater, Unit 864-PH-7R, is equipped with ULNB that will achieve a NO_x emission rate of 0.02 pounds per MMBtu (lb/MMBtu). Also as part of the Project, PES has elected to install LNB on the Unit 864 PH-1, Unit 864 PH-11, and Unit 864 PH-12 Heaters that will achieve a NO_x emission rate of 0.06 lb/MMBtu.

The annual emissions in tons per year (TPY) for each Unit 864 Naphtha Hydrotreating Unit heaters are shown below in **Table 3-2**.

Table 3-2 Projected Unit 864 Naphtha Hydrotreating Unit Heater Emissions

Pollutant	Unit 864 PH-1 Heater (TPY)	Unit 864 PH-7R Heater (TPY)	Unit 864 PH-11 Heater (TPY)	Unit 864 PH-12 Heater (TPY)	Total Unit 864 Emissions (TPY)
NO_x[1]	-2.6	6.5	-6.2	-4.4	**-6.8**
NO_2	- - -	6.5	- - -	- - -	**6.5**
SO_2	0.5	0.9	0.4	0.4	**2.2**
CO	15.9	9.7	12.0	12.1	**49.7**
PM	1.4	2.3	1.1	1.1	**5.9**
PM_{10}	1.4	2.3	1.1	1.1	**5.9**
$PM_{2.5}$[2]	1.4	0.7	1.1	1.1	**4.3**
VOC	1.0	1.6	0.8	0.8	**4.2**
Lead	9.4E-05	1.5E-04	7.1E-05	7.2E-05	**3.9E-04**
CO_2e	22,758	35,902	17,213	17,341	**93,214**

[1] NO_x emissions for the Unit 864 PH-1, Unit 864 PH-11, and Unit 864 PH-12 heaters are based on the sum of the Project emissions for this source (PAE minus BAE) under 25 PA §127.203(b)(1)(i). Under 25 PA Code §127.203a(a)(1)(ii), NO_2 emissions for these heaters are based on Step 1 emissions increases only, where these sources are not expected to have an increase in NO_2 emissions.

[2] The Unit 864 PH-7R Heater, originally installed at the LSG Unit at the former Eagle Point Refinery, has an identical design as the Unit 870 H-1 and Unit 870 H-2 Heaters. Therefore, the $PM_{2.5}$ emissions rate as demonstrated by stack testing at the Unit 870 LSG Unit heaters was used for the Unit 864 PH-7R Heater.

The emissions associated with the shutdown of the existing Unit 864 PH-7 Heater are the annual average emissions based actual emissions for the period of June 2012 through May 2014. The shutdown emissions decreases for the Unit 864 PH-7 Heater are shown in **Table 3-3** below.

Table 3-3 Unit 864 PH-7 Heater Shutdown Emissions

Pollutant	Total Unit 864 PH-7 Heater Shutdown Emissions (TPY)
NO_x	-10.2
SO_2	-0.3
CO	-9.9
PM	-0.9
PM_{10}	-0.9
$PM_{2.5}$	-0.9
VOC	-0.7
Lead	-5.9E-05
CO_2e	-13,511

3.2 *UNIT 870 LSG UNIT EMISSIONS*

The expansion of the Unit 870 LSG Unit will increase emissions from the Unit 870 H-1 Heater and the Unit 870 H-2 Heater. The BAE for the Unit 870 H-1 and Unit 870 H-2 Heaters are based on the actual firing from each of these heaters during the period of June 2012 through May 2014. The annual emission changes in this Project reflect the difference between past actual emissions (BAE) and future projected actual emissions (PAE) based on the existing hourly firing rate limits.

NO_x, PM, PM_{10}, $PM_{2.5}$, VOC, and CO emission factors were developed for the Unit 870 H-1 and Unit 870 H-2 Heaters based on stack testing. Similar to the Unit 864 Naphtha Hydrotreating Unit heaters, SO_2 emissions are calculated using heater-specific SO_2 emission factors based on average actual firing rates and average actual SO_2 emissions from 2013 and 2014. The CO_2e emissions were calculated using emission factors from the GHGMRR codified at 40 CFR Part 98. As part of the installation of the new splitter tower in the Unit 870 LSG Unit, the new Unit 870 H-3 Heater will be

installed to provide the necessary heat for the splitter tower reboiler. This heater will be equipped with ULNB that will achieve a NO_x emission rate of 0.03 lb/MMBtu.

The annual emissions for each of the Unit 870 LSG Unit heaters are shown below in **Table 3-4**.

Table 3-4 Projected Unit 870 LSG Unit Heater Emissions

Pollutant	Unit 870 H-1 Heater (TPY)	Unit 870 H-2 Heater (TPY)	Unit 870 H-3 Heater (TPY)	Total Unit 870 Emissions (TPY)
NO_x	7.8	2.6	14.5	**24.9**
NO_2	7.8	2.6	14.5	**24.9**
SO_2	0.6	0.3	1.1	**2.0**
CO	0.4	0.0	14.5	**14.8**
PM	1.7	0.2	3.6	**5.5**
PM_{10}	1.7	0.2	3.6	**5.5**
$PM_{2.5}$	0.6	0.2	1.1	**1.9**
VOC	0.1	0.1	2.4	**2.6**
Lead	1.3E-04	4.5E-05	2.3E-04	**4.1E-04**
CO_2e	31,413	10,943	56,417	**98,773**

3.3 *UNIT 1332 HYDROBON STRIPPER AND PRE-FRACTIONATOR EMISSIONS*

The fugitive VOC emissions from piping connections planned for the Unit 1332 hydrobon stripper and pre-fractionator are included in **Section 3.5** below.

The BAE are based on the actual firing from the Unit 1332 H-2 and Unit 1332 H-3 Heaters during the period of June 2012 through May 2014. The annual emission changes in this Project reflect the difference between past actual emissions (BAE) and future projected actual emissions (PAE) based on the expected average hourly firing rate of these heaters as a result of this Project. That is, the emissions increases are based on the incremental demand on these non-modified heaters due to increased processing of streams through the hydrobon equipment.

NO_x and CO emission factors were developed for the Unit 1332 H-2 Heater based on stack testing, while USEPA AP-42 emissions factors were used for

NO_x and CO emissions from the Unit 1332 H-3 Heater. Consistent with historic practices for both heaters, PES used USEPA AP-42 emission factors for VOC, PM, PM_{10}, and $PM_{2.5}$. Similar to the Unit 864 Naphtha Hydrotreating Unit heaters, SO_2 emissions are calculated using heater-specific SO_2 emission factors based on average actual firing rates and average actual SO_2 emissions from 2013 and 2014. The CO_2e emissions were calculated using emission factors from the GHGMRR codified at 40 CFR Part 98. The annual emissions for the Unit 1332 hydrobon stripper and pre-fractionator are shown below in **Table 3-5**.

Table 3-5 ***Projected Unit 1332 Hydrobon Stripper and Pre-Fractionator Incremental Emissions***

Pollutant	Unit 1332 H-2 Heater (TPY)	Unit 1332 H-3 Heater (TPY)	Total Unit 1332 Emissions (TPY)
NO_x	1.6	1.6	**3.2**
NO_2	1.6	1.6	**3.2**
SO_2	0.2	0.1	**0.2**
CO	0.5	1.4	**1.9**
PM	0.4	0.1	**0.5**
PM_{10}	0.4	0.1	**0.5**
$PM_{2.5}$	0.4	0.1	**0.5**
VOC	0.3	0.1	**0.4**
Lead	2.4E-05	8.1E-06	**3.2E-05**
CO_2e	6,079	2,018	**8,097**

3.4 *ANCILLARY SOURCES AND UTILITIES EMISSIONS*

The PES Tier 3 Project will result in incremental demand on ancillary utilities such as cooling towers and the Unit 867 Sulfur Recovery Unit (SRU) relative to their baseline period. The sections below describe the emissions and calculations for each source.

3.4.1 *Incremental Cooling Water Emissions*

The incremental 600 gpm of incremental cooling water will be processed by the existing Unit 864 Cooling Tower. The emissions calculations assume an incremental recirculation rate of 600 gpm, an expected maximum dissolved solids concentration of 600 ppmw, and drift eliminator performance of 0.005%. USEPA's AP-42 Chapter 5 emission factors are used to provide a

conservative estimate for potential VOC emissions. Emissions for PM, PM_{10}, and $PM_{2.5}$ are estimated based on the Reisman/Frisbie methodology[3]. The annual emissions for incremental cooling water are shown in **Table 3-6** below.

Table 3-6 Projected Incremental Cooling Water Emissions

Pollutant	Incremental Cooling Water Emissions (TPY)
PM	0.2
PM_{10}	0.1
$PM_{2.5}$	0.001
VOC	0.1

3.4.2 *Incremental Sulfur Production Emissions*

Based on an engineering analysis of the total sulfur reduction expected in the gasoline blending pool as a result of this Project, an incremental 0.45 TPD of sulfur production will be expected at the Unit 867 SRU. Emissions for NO_x, SO_2, and CO were developing by scaling actual Unit 867 SRU emissions and sulfur production for 2013 with the expected incremental sulfur production as a result of this Project. The annual emissions for incremental sulfur production are shown in **Table 3-7** below.

Table 3-7 Projected Incremental Sulfur Production Emissions

Pollutant	Incremental Sulfur Production Emissions (TPY)
NO_x	0.1
NO_2	0.1
SO_2	0.2
CO	3.3

[3] Reisman, J. and Frisbie, G., *Calculating Realistic PM10 Emissions From Cooling Towers.*

3.5 *FUGITIVE EMISSIONS - PIPING COMPONENTS*

This proposed Project will result in an increase in VOC emissions from equipment leaks due to the installation of equipment such as flanges and valves required as part of the piping installations. PES has conservatively estimated a component count, including valves, flanges, connectors and pumps based on preliminary engineering design. Consistent with current PES practices, the emission increases from equipment leaks were calculated based on USEPA emission factors for the petroleum industry. Fugitive VOC emissions in tons per year from leaking equipment for the proposed Project are presented in **Table 3-8** below.

Table 3-8 ***Projected Fugitive Component Emissions***

Affected Units	New Fugitive Components	Number of Components	VOC Emissions (TPY)[1]
Unit 864, Unit 870, and Unit 1332	Valves	125	0.009
	Flanges	250	0.001
	Pumps	13	0.003
Total Emissions			**0.013**

[1] Consistent with current PES practice, potential fugitive emissions are estimated based on the USEPA "Protocol for Equipment Leak Emission Estimates", EPA-453/R-95-017, Table 2-12.

3.6 *TOTAL PROJECT EMISSIONS*

The total emissions from the PES Tier 3 Project are summarized in **Table 3-9** below.

Table 3-9 Total PES Tier 3 Project Emissions

Source	Pollutant (TPY)										
	NO_x	NO_2	SO_2	CO	VOC	PM	PM_{10}	$PM_{2.5}$	H_2SO_4	Lead	CO_2e
Unit 864 PH-1 Heater	-2.6	---	0.5	15.9	1.0	1.4	1.4	1.4	---	9.4E-05	22,758
Unit 864 PH-7 Heater[1]	-10.2	---	---	---	-0.7	---	---	---	---	---	---
Unit 864 PH-7R Heater	6.5	6.5	0.9	9.7	1.6	2.3	2.3	0.7	---	1.5E-04	35,902
Unit 864 PH-11 Heater	-6.2	---	0.4	12.0	0.8	1.1	1.1	1.1	---	7.1E-05	17,213
Unit 864 PH-12 Heater	-4.4	---	0.4	12.1	0.8	1.1	1.1	1.1	---	7.2E-05	17,341
Unit 870 H-1 Heater	7.8	7.8	0.6	0.4	0.1	1.7	1.7	0.6	---	1.3E-04	31,413
Unit 870 H-2 Heater	2.6	2.6	0.3	0.0	0.1	0.2	0.2	0.2	---	4.5E-05	10,943
Unit 870 H-3 Heater	14.5	14.5	1.1	14.5	2.4	3.6	3.6	1.1	---	2.3E-04	56,417
Unit 1332 H-2 Heater	1.6	1.6	0.2	0.5	0.3	0.4	0.4	0.4	---	2.4E-05	6,079
Unit 1332 H-3 Heater	1.6	1.6	0.1	1.4	0.1	0.1	0.1	0.1	---	8.1E-06	2,018
Incremental Cooling Water	---	---	---	---	0.1	0.2	0.1	0.001	---	---	---
Incremental Sulfur Production	0.1	0.1	0.2	3.3	---	---	---	---	---	---	---
Fugitive Components	---	---	---	---	0.01	---	---	---	---	---	---
Total Project Emissions	**11.2**	**34.6**	**4.7**	**69.7**	**6.7**	**12.0**	**12.0**	**6.7**	**0**	**8.3E-04**	**200,084**

[1] Consistent with 25 PA Code §127.203(b)(1)(i), the proposed increases or decreases in emissions from the project are aggregated. Therefore, the Unit 864 PH-7 Heater shutdown emissions for NO_x and VOC are included in the Project emissions total.

4.0 *NEW SOURCE REVIEW APPLICABILITY*

PES must comply with all federal and State requirements applicable to this proposed Project. The existing facility is a major stationary source for all criteria pollutants; therefore, the new sources in this Project must undergo a new source review analysis.

The PES Refining Complex is located in an area treated as severe nonattainment for ozone. It is designated as attainment for other pollutants. Because of the above designations, PES must evaluate the Project-related activities for the applicability of the NANSR program for VOC and NO_x as ozone precursors, and the applicability of the PSD program for NO_2, SO_2, CO, PM, PM_{10}, $PM_{2.5}$, H_2SO_4, and lead. Under the NANSR program, the Project is considered a major modification for ozone if the VOC or NO_x emissions exceed 25 TPY by itself or by aggregating with increases and decreases over the contemporaneous time period. Under PSD, a major modification occurs when NO_2 or SO_2 emissions exceed 40 TPY, CO emissions exceed 100 TPY, PM emissions exceed 25 TPY, PM_{10} emissions exceed 15 TPY, $PM_{2.5}$ emissions exceed 10 TPY, H_2SO_4 emissions exceed 7 TPY, or lead emissions exceed 0.6 TPY.

4.1 *GREENHOUSE GAS TAILORING RULE*

On 13 May 2010, EPA issued the final greenhouse gas (GHG) permitting rule officially known as the *Prevention of Significant Deterioration and Title V Greenhouse Gas Tailoring Rule* establishing GHGs as a PSD pollutant and setting major source emission thresholds for GHGs on a CO_2 equivalent (CO_2e) basis. If any new construction or modification of an existing facility results in a net emissions increase above established major source thresholds for GHGs on a CO_2e basis, GHG is considered a regulated pollutant for that project[4]. Under the rule, GHG pollutants are considered to include carbon dioxide (CO_2), methane (CH_4), nitrous oxide (N_2O), hydrofluorocarbons (HFCs), perfluorocarbons (PFCs), and sulfur hexafluoride (SF_6).

[4] On June 23, 2014 in Utility Air Regulatory Group v. EPA, the Supreme Court overturned part of EPA's trigger for when new or modified sources must seek permits for their GHG emissions, holding that the agency can only impose GHG PSD or Title V permitting when a facility's conventional emissions would otherwise trigger PSD or Title V. When PSD is triggered for conventional pollutants, GHG BACT will still be required if GHG emissions are above yet to be determined de minimis levels (75,000 ton/yr and 100,000 ton/yr threshold must be revisited).

Phase I of the rule was effective on 2 January 2011 and affects sources that are newly constructed or modified and are a "major source" under PSD for any pollutant other than GHGs. Upon triggering PSD for a non-GHG pollutant, the source must then determine PSD applicability for GHGs under the "Tailoring Rule" provisions. Under Phase I, newly constructed or modified facilities having a net increase of more than 75,000 TPY of CO_2e, would trigger PSD for GHGs.

As noted, the Supreme Court ruling indicates that a project's GHG potential emissions alone cannot trigger PSD permitting requirements. In the court's opinion, GHG BACT would only be required if PSD is triggered for a conventional pollutant first. Therefore, Phase II of the "Tailoring Rule" is no longer in effect.

4.2 *PREVENTION OF SIGNIFICANT DETERIORATION ANALYSIS*

The Prevention of Significant Deterioration regulations (40 CFR 52.21) are federal regulations that apply to new major sources or "major modifications" of existing "major stationary sources" located in attainment or unclassifiable areas for a given pollutant. The PSD regulations are enforced by AMS in accordance with 25 PA Code §127.81. The Philadelphia Refining Complex is a major stationary source, and a modification to the source that would result in a "significant emission increase" and a "significant net emissions increase" would trigger PSD applicability.

The PSD regulations define a major modification in 40 CFR 52.21(b)(3)(i) as any physical change in or change in the method of operation of a major stationary source that would result in a significant emission increase and a significant net emission increase of any pollutant subject to regulation under the Act. The regulation defines threshold levels of annual emission rates that constitute "significant increases" for a variety of pollutants. The PSD emissions analysis is performed as per applicable regulation in 25 PA Code §127.81 and 40 CFR §52.21.

In Step 1 of the analysis, the emissions increases from new sources are calculated. The emissions calculation methodology was described in the earlier sections. As indicated in **Table 4-1** below, CO_2e emissions for the proposed Project exceed the PSD threshold; however, because a conventional pollutant is not triggered, the CO_2e emissions are not subject to regulation under PSD.

Table 4-1 PSD Emissions Analysis (Step 1)

Emissions	Pollutant (TPY)								
	NO_2	SO_2	CO	PM	PM_{10}	$PM_{2.5}$	H_2SO_4	Lead	CO_2e
PES Tier 3 Project	34.6	4.7	69.7	12.0	12.0	[illegible].7	0	8.3E-04	200,084
PSD Significant Level	40	40	100	25	15	[illegible].0	7	0.6	75,000
PSD Triggered (Before Netting Analysis)	No	No	No	No	No	No	No	No	No

4.3 *NONATTAINMENT NEW SOURCE REVIEW ANALYSIS - OZONE*

Facilities located in nonattainment areas that plan construction or modification of a source must evaluate the applicability of nonattainment NSR. The requirements are defined in 25 PA Code §127.201 through §127.217. Sources located in a nonattainment area, ozone transport region, or attainment or unclassifiable area impacting a nonattainment area are subject to permit requirements defined in 25 PA Code §127.203. In Pennsylvania, facilities located in the five county area including Philadelphia County are subject to the special permit requirements codified at §127.203. Under the special permit requirements, proposed new sources are subject to the NANSR requirements if the cumulative emissions calculated, using either one of the two scenarios below, equals or exceeds 25 tons per year of NO_x or VOC:

- Increases or decreases in emissions from the project are aggregated with other net emissions increases over the consecutive 5-calendar year period including the year in which the project is constructed; or

- Increases or decreases in emissions from the project are aggregated with other net emission increases or decreases over the previous 10-year period. In this case, the facility is subject only to the emissions offset requirements codified at §127.205.

If the resulting net change exceeds the applicable thresholds, those emissions must be offset by a ratio of 1.3 to 1. If the offsets come from internal emission reductions, then Lowest Achievable Emission Rate (LAER) requirement does not apply (25 PA Code §127.203(b)(3)).

Table 4-2 below presents a summary of Project emissions for NO_x and VOC aggregated with other net emissions increases over the consecutive 5-calendar year period including the year in which the Project construction is planned (calendar years 2011 through 2015). Contemporaneous Emissions Tables are provided in **Attachment D**.

Table 4-2 NANSR Netting Analysis for NO_x and VOC Emissions (5 calendar year)

Emissions	5 year NO_x (TPY)	5 year VOC (TPY)
PES Tier 3 Project	11.2	6.7
Contemporaneous Increases	12.8	13.2
Net Emissions Increase	**24.1**	**19.8**
NA-NSR Significance Level	25	25
NA-NSR Review Required	**No**	**No**

As shown in **Table 4-2** above, the 5 calendar year net emissions increases of NO_x and VOC from the proposed Project are below the NANSR threshold of 25 tons per year. Therefore, the proposed Project is not subject to the LAER requirements of 25 PA Code §127.205.

Table 4-3 below presents a summary of Project emissions for NO_x and VOC aggregated with other net emission increases or decreases over the previous 10 year period.

Table 4-3 NANSR Netting Analysis for NO_x and VOC Emissions (10 year)

Emissions	10 year NO_x (TPY)	10 year VOC (TPY)
PES Tier 3 Project	11.2	6.7
Contemporaneous Increases/Decreases	23.4	28.4
Net Emissions Increase	**34.6**	**35.0**
NANSR Significance Level	25	25
NANSR Review Required	**Yes**	**Yes**

As shown in **Table 4-3** above, the 10 year net emissions increases of NO_x and VOC from the proposed Project are above the NANSR applicability thresholds of 25 tons per year. Therefore, the proposed Project is subject to the offsetting requirements of 25 PA Code §127.205(3). PES plans to

surrender 45.0 tons of NO_x offsets (34.6 tons of NO_x emissions at a 1.3:1 ratio) and 45.5 tons of VOC offsets (35.0 tons of VOC emissions at a 1.3:1 ratio). PES is in active discussion with AMS regarding the accounting of emission reductions from the former Marcus Hook Refinery that were established while the facility was considered part of the Philadelphia Refining Complex. While PES believes the reductions should be considered contemporaneous reductions, for simplicity for the proposed Project, PES plans to use a portion of the remaining NO_x emission reduction credits (ERCs) generated from the shutdown of certain emissions sources at Marcus Hook to offset the 10 year net emissions increases of NO_x.

5.0 *BAT DETERMINATION*

In accordance with 25 PA Code §127.12, an applicant for Plan Approval must demonstrate that the emissions from a new source will be the minimum attainable through use of the Best Available Technology (BAT). BAT is defined as equipment, devices, methods or techniques as determined by the Department that will prevent, reduce or control emissions of air contaminants to the maximum degree possible and that are available or can be made available to the facility. 25 PA Code §121.1 (Definitions) defines a new source as a source that was constructed and commenced operation on or after July 1, 1972, or a source that was modified so that the fixed capital cost of new components exceeds 50% of the fixed capital cost that would be required to construct a comparable entirely new source.

The affected heaters in this proposed Project and their corresponding construction dates at the Complex are shown in **Table 5-1** below.

Table 5-1 Affected Heater Construction Dates

Heater	Construction Date
Unit 864 PH-1 Heater	1971
Unit 864 PH-7R Heater	To be installed
Unit 864 PH-11 Heater	1971
Unit 864 PH-12 Heater	1971
Unit 870 H-1 Heater	2004
Unit 870 H-2 Heater	2004
Unit 870 H-3 Heater	To be installed
Unit 1332 H-2 Heater	2005
Unit 1332 H-3 Heater	1958

The Unit 1332 H-3 Heater is excluded from this analysis because it was installed prior to July 1, 1972 and has not been modified since that date in any way that would result in the emission of an air contaminant not previously emitted. The Unit 870 H-1 Heater, Unit 870 H-2 Heater, and Unit 1332 H-2 Heater, all of which have ULNB installed, are excluded from this analysis because these sources were required to meet BAT at the time of installation and have not been modified since that date in any way that would result in the emission of an air contaminant not previously emitted.

While the Unit 864 PH-1, Unit 864 PH-11, and Unit 864 PH-12 heaters are planned to have LNB installed, the cost of this change will not be in excess of the 50% fixed capital cost described above for the Project to be considered a "new source" per 25 PA Code §121.1. The proposed replacement of the Unit 864 PH-7 Heater with an existing heater from the former Sunoco Inc. (R&M) Eagle Point Refinery and the proposed installation of the Unit 870 H-3 Heater are the only sources associated with the PES Tier 3 Project that are a "new source" per 25 PA Code §121.1.

PES has conducted a BAT analysis for the proposed Unit 864 PH-7R and Unit 870 H-3 Heaters. In this analysis PES reviewed information from various databases to determine recent requirements and emission limits for the new source associated with this Project, including:

- EPA's New Source Review website;
- U.S. EPA's RACT/BACT/LAER Clearinghouse (RBLC) Database;
- Various state air quality regulations and websites;
- Recent EPA consent decrees within the refining industry; and
- State and federal guidance documents.

Note that BAT is a pollutant-specific determination. Based on a review of established emission control technologies and emission limits in permits, the following sections document the results of the source and pollutant specific BAT determinations.

5.1 *NO_X CONTROLS*

The Unit 864 PH-7R and Unit 870 H-3 Heaters will be equipped with ULNB that will achieve a NO_x emission rate of 0.02 lb/MMBtu and 0.03 lb/MMBtu, respectively. PES reviewed available and applicable NO_x controls that have been installed on process heaters at refineries or similar operations. The only additional NO_x control available beyond the controls planned is Selective Catalytic Reduction (SCR). The stack temperature of both the Unit 864 PH-7R and Unit 870 H-3 Heaters will be approximately 425 degrees Fahrenheit (°F) due to use of heat recovery in the stack that is integral to the process. According to the USEPA *Air Pollution Control Technology Fact Sheet* for SCR (EPA-452/F-03-032), the optimum operating temperature range for SCR is 480°F to 800°F. Therefore, the use of SCR on both the Unit 864 PH-7R and Unit 870 H-3 Heaters is not feasible.

Nonetheless, PES estimated the cost effectiveness for SCR for NO_x control in addition to the currently installed ULNB on the Unit 864 PH-7R and Unit 870 H-3 Heaters in the BAT NO_x cost effectiveness analysis presented in **Attachment E**. Cost effectiveness was calculated for SCR using the methodology in the regulations and in the "OAQPS Control Cost Manual" (EPA/452/B-02-001). Total annual costs are the sum of operating and maintenance (O&M) costs and capital recovery costs. The capital recovery costs assume the equipment will be amortized over a 20-year time frame at 20 percent interest, the rate PES uses for evaluating capital projects. Total capital required to implement SCR control and operating and maintenance costs were estimated using USEPA's *Alternative Control Techniques Document - NO_x Emissions from Process Heaters (Revised)* – EPA-453/R-93-034. The cost effectiveness of the additional SCR control on the Unit 864 PH-7R Heater is approximately $137,000 per ton of NO_x emissions reductions, while the cost effectiveness of the additional SCR control on the Unit 870 H-3 Heater is approximately $81,000 per ton of NO_x emissions reductions.

Accordingly, ULNB are considered BAT for the Unit 864 PH-7R and Unit 870 H-3 Heaters.

5.2 *CO CONTROLS*

The available emission controls for reducing CO emissions from process heaters include:

- Good combustion practices; and
- Oxidation catalysts.

Based on a review of the RBLC database and other permits issued for refineries, no documented cases of oxidation catalysts being implemented on similarly sized process heaters were identified. Therefore, installation of oxidation catalyst for heaters of this size has not been demonstrated and is not available. The lack of application in refineries is largely due to operational limitations of the oxidation catalysts. The installation of oxidation catalyst in flue gas containing more than trace levels of SO_2 will result in poisoning and deactivation of the catalyst by sulfur-containing compounds, as well as increasing the conversion of SO_2 to SO_3. This would increase condensable particulate matter emissions, which would foul the catalyst, in turn, prohibiting oxidation as well as increasing flue gas system corrosion rates.

Good combustion practice is the predominantly used control option for reducing CO emissions from process heaters. The use of combustion tuning and implementation of periodic maintenance on the process heaters ensure that the CO emissions are limited.

Accordingly, good combustion practices are BAT for limiting CO emissions from the Unit 864 PH-7R and Unit 870 H-3 Heaters

5.3 *$PM/PM_{10}/PM_{2.5}$ CONTROLS*

The available emission control options for reducing $PM/PM_{10}/PM_{2.5}$ emissions from process heaters include:

- Good combustion practices;
- Electrostatic precipitators;
- Baghouse or fabric filters; and
- Use of gaseous fuels.

Refinery fuel gas will be used as the only fuel for the Unit 864 PH-7R and Unit 870 H-3 Heaters. Based on our review of the RBLC database and permits issued at refineries, ESPs or baghouses are not installed on similarly sized heaters fired on refinery fuel gas. Though these control options are potentially technically feasible for combustion sources such as process heaters, they are not commercially demonstrated on similarly sized process heaters. Therefore, these control options are not further considered in this evaluation. The refinery fuel gas fired in the heaters is comprised of a significant amount of natural gas and therefore, is similar in heating value and characteristics to natural gas.

BAT for the Unit 864 PH-7R and Unit 870 H-3 Heaters for limiting $PM/PM_{10}/PM_{2.5}$ emissions is good combustion practices and firing of refinery fuel gas.

5.4 *SO_2 CONTROLS*

The available emission control options for minimizing SO_2 emissions from process heaters includes:

- Wet flue gas desulfurization (FGD) scrubber;

- Dry FGD scrubber; and

- Use of gaseous fuels.

Based on a review of EPA's RBLC database, and permits issued for refineries, wet FGD and dry FGD systems have not been installed on natural gas or refinery fuel gas fired heaters at any refinery in the country. Though these control options are potentially technically feasible for combustion sources such as process heaters, they are not commercially demonstrated on similarly sized process heaters. Therefore, these control options are not considered further in this evaluation.

Refinery fuel gas consists of a combination of refinery process by-product gas and natural gas. The refinery by-product gas is desulfurized prior to supplementing with natural gas through a mix drum in order to ensure New Source Performance Standards Subpart J limits are met prior to combustion. Refinery fuel gas is used at every refinery in the country as part of balancing available energy from process operations and by-products.

The use of low sulfur refinery fuel gas is BAT for the Unit 864 PH-7R and Unit 870 H-3 Heaters for SO_2.

5.5 *VOC CONTROLS*

The available emission control options for minimizing VOC emissions from the process heaters includes:

- Oxidation catalysts; and

- Good combustion practices; and

- Use of gaseous fuels.

Based on our review of the RBLC databases, oxidation catalysts have not been demonstrated for VOC control on process heaters at refineries. The predominant control option to reduce VOC emissions from process heaters is the use of good combustion practices.

The Unit 864 PH-7R and Unit 870 H-3 Heaters will only fire refinery fuel gas which is lower in VOC content than liquid fuels and some other gaseous fuels. The Refinery removes many VOCs from the by-product gases before they are sent to the refinery fuel gas system and thus refinery fuel gas

consists of mostly non-VOC compounds such as methane, ethane, and hydrogen.

The use of good combustion practices and firing of refinery fuel gas is BAT for the Unit 864 PH-7R and Unit 870 H-3 Heaters for VOC.

6.0 *APPLICABLE STANDARDS ANALYSIS*

The following sections review the applicability of local, state, and federal regulations including National Emission Standards for Hazardous Air Pollutants (NESHAPS) and New Source Performance Standards (NSPS) to the PES Tier 3 Project.

6.1 *AIR MANAGEMENT SERVICES REGULATIONS*

AMS Regulations incorporate Pennsylvania air contaminant emissions limits and control efficiencies (Regulation I, Section X) and include by reference, the federal regulations (AMS Regulation 1, Section XI). AMS also regulates SO_2 emissions (Regulation III, Section II), fuel sulfur content (Regulation III, Section III), pump and compressor emissions (Regulation V, Section IV), and process equipment leaks (Regulation V, Section XIII).

With regard to Regulation VI, there will be no new air toxic contaminants associated with this Project.

There are no AMS regulations that are significantly different from, or more stringent than, the regulations cited herein. The proposed Project will not result in any additional AMS applicable requirements

6.2 *FEDERAL NESHAPS (40 CFR PART 63)*

The NESHAPS were promulgated after the 1990 Clean Air Act Amendments and require application of technology-based emissions standards for major and area sources of HAP. The PES hazardous air pollutant (HAP) emissions exceed 10 TPY for an individual HAP or 25 TPY for all HAP combined; therefore, it is considered a major source of HAPs.

Subpart DDDDD

The proposed PES Tier 3 Project is subject to the National Emission Standards for Hazardous Air Pollutants for Major Sources: Industrial, Commercial, and Institutional Boilers and Process Heaters (Boiler MACT) codified in 40 CFR 63.7490. The existing affected heaters must be in compliance with the Boiler MACT within 180 days of January 31, 2016 and new affected heaters within 180 days of initial startup. PES will demonstrate compliance by performing annual tune-ups of each affected heater and completing a one-time energy assessment for existing heaters.

6.3 *FEDERAL NSPS (40 CFR PART 60)*

Section 111 of the Clean Air Act authorized the EPA to develop technology based standards which apply to specific categories of stationary sources. These standards are referred to as New Source Performance Standards (NSPS). The following subsections highlight the requirements of the applicable NSPSs for the proposed Project.

6.3.1 *Replacement Unit 864 PH-7R Heater*

Subpart Ja is applicable to new or modified sources in petroleum refineries including: fluid catalytic cracking units (FCCU), fluid coking units (FCU), delayed coking units, fuel gas combustion devices, flares and sulfur recovery plants. The idle Unit 864 PH-7R Heater from the former Sunoco Inc. (R&M) Eagle Point Refinery was subject to NSPS Subpart J at the commencement of operation (prior to the May 14, 2007 NSPS Subpart Ja applicability date) and continued to be subject to Subpart J at the time when the Eagle Point Refinery was idled in the fourth quarter 2009.

Unlike the PSD and NANSR programs, reactivation of an idle source is not considered construction of a new source[5]. The replacement Unit 864 PH-7R Heater would only be subject to NSPS if the source has been modified or reconstructed, where 40 CFR 60.2 defines modification as...

> *"any physical change in, or change in the method of operation of, an existing facility which increases the amount of any air pollutant (to which a standard applies) emitted into the atmosphere by that facility or which results in the emission of any air pollutant (to which a standard applies) into the atmosphere not previously emitted."*

The proposed changes to the Unit 864 Naphtha Hydrotreating Unit do not require physical changes or a change in the method of operation to the replacement Unit 864 PH-7R Heater which increases the amount of any pollutant to which a standard applies. Therefore, the replacement Unit 864 PH-7R Heater is considered subject to Subpart J and is not considered a modified source and therefore, not subject to Subpart Ja.

6.3.2 *Unit 870 H-2 Heater*

The Unit 870 H-2 Heater will have updated ULNBs installed as part of this Project. However, both the maximum firing capacity (MMBtu/hr) and NO_x

[5] Memo from Edward E. Reich, Dir., Div. Of Stationary Source Enf., to Sandra S. Gardebring, Dir., Region V Enf. Div. (Oct. 30, 1980).

emission rate (lb/MMBtu) of the Unit 870 H-2 Heater will be unaffected by the change. The proposed physical change to the Unit 870 H-2 Heater will not result in increases the amount of any pollutant to which a standard applies. Therefore, the Unit 870 H-2 Heater is considered subject to Subpart J and is not considered a modified source and therefore, not subject to Subpart Ja.

6.3.3 *New Unit 870 H-3 Heater*

The new Unit 870 H-3 Heater is considered a fuel gas combustion device and is subject to Subpart Ja, which includes sulfur and NO_x standards. As per 40 CFR 60.107a(2), PES complies with the hydrogen sulfide (H_2S) concentration limits in 60.102a(g)(1)(ii) by continuously monitoring and recording the concentration by volume (dry basis) of H_2S in the refinery fuel gas system.

NO_x emissions limitations apply to natural draft process heaters with a rated capacity greater than 40 MMBtu/hr. The Unit 870 H-3 Heater will subject to the NO_x limit found at 40 CFR §60.102a(g)(2)(i)(B) which is 0.040 lb/MMBtu on a 30-day rolling average basis. The expected NO_x emission rate for the Unit 870 H-3 Heater is 0.03 lb/MMBtu.

As per 40 CFR §60.107a(d), PES will be required install, operate, calibrate and maintain an instrument for continuously monitoring and recording the concentration (dry basis, 0-percent excess air) of NO_x emissions into the atmosphere to comply with the NO_x emissions limit in 40 CFR §60.102a(g)(2)(i)(B). The monitor must also include an oxygen monitor for correcting the data for excess air.

6.3.4 *Other Affected Heaters*

PES evaluated whether the affected heaters that are experiencing increased utilization (Unit 864 PH-1 Heater, Unit 864 PH-11 Heater, Unit 864 PH-12 Heater, Unit 870 H-1 Heater, and Unit 1332 H-2) as part of the PES Tier 3 Project trigger the applicability of NSPS for affected sources.

The proposed changes to the Unit 864 Naphtha Hydrotreating Unit, Unit 870 LSG Unit, or Unit 1332 Reformer Unit do not require physical changes or capital expenditures on the affected facility (i.e., the heaters) to accommodate the increased utilization. As such, no sources are considered to be modified sources under USEPA's New Source Performance Standards codified under 40 CFR Part 60. Specifically, 40 CFR 60.14(e)(2) excludes from the definition of modification...

> *"an increase in production rate of an existing facility, if that increase can be accomplished without a capital expenditure on that facility."*

The increase in heater utilization sought in this Project represents a production rate increase for the affected heaters. All of the heaters serve the same overall purpose - to produce heated hydrocarbon streams for processing. Additionally, as discussed in published USEPA guidance, both changes in production rate and operating changes are included in the assessment of capital expenditure associated with the project[6].

The increase in utilization of the affected heaters in this Project can be achieved without any capital expenditure. Therefore, the affected heaters are not considered modified sources and therefore are not subject to NSPS.

[6] EPA, 1989. Re: Applicability of NSPS. Letter from Don R. Clay, Acting Assistant EPA Administrator of EPA to Mr. John W. Boston, WEPCO, February 15, 1989.

Attachment A
AMS Plan Approval Application Forms

CITY OF PHILADELPHIA

DEPARTMENT OF PUBLIC HEALTH
PUBLIC HEALTH SERVICES
AIR MANAGEMENT SERVICES

Air Management Services
321 University Avenue
Philadelphia PA 19104-4543
Phone: (215) 685-7572
FAX: (215) 685-7593

APPLICATION FOR PLAN APPROVAL TO CONSTRUCT, MODIFY OR REACTIVATE AN AIR CONTAMINATION SOURCE AND/OR AIR CLEANING DEVICE

(Prepare all information completely in print or type in triplicate)

SECTION A - APPLICATION INFORMATION

Location of source (Street Address) **3144 Passyunk Avenue**	Facility Name **Philadelphia Energy Solutions Refining and Marketing LLC**	
Owner **Philadelphia Energy Solutions Refining and Marketing LLC**		Tax ID No **61-1689574**
Mailing Address **3144 Passyunk Avenue**	Telephone No. **(215) 339-2074**	Fax No. **(215) 339-2657**
Contact Person **Charles D. Barksdale Jr.**	Title **Manager, Environmental Department**	
Mailing Address **3144 Passyunk Avenue Philadelphia, PA 19145**	Telephone No. **(215) 339-2074**	Fax No **(215) 339-2657**
E-mail Address **CHARLES.BARKSDALE@pes-companies.com**		

SECTION B - DESCRIPTION OF ACTIVITY

Application type ☒New source ☒Modification ☒Replacement ☐Reactivation ☐Air cleaning device ☐Other	SIC Code **2911**	Completion Date **January 1, 2017**
Applicable requirement ☒ NSPS ☒ NESHAP ☐ Case by Case MACT ☒ NSR ☐ PSD	Does Facility submit Compliance Review Form biannually? ☒ Yes ☐ No If No attach Air Pollution Control Act Compliance Review Form with this application.	

Source Description

PES plans to reconfigure existing process units, re-route intermediate process streams, and expand hydrotreating process capacity to enable compliance with the Tier 3 gasoline standards. This includes the installation of low NO_x burners (LNB) on the Unit 864 PH-1, Unit 864 PH-11, Unit 864 PH-12 refinery fuel gas fired heaters; replacement of the Unit 864 PH-7 Heater with an idle heater from the former Sunoco Inc. (R&M) Eagle Point Refinery; and installation of a new Unit 870 H-3 Heater. For the purposes of this application, the project is referred to as the "PES Tier 3 Project".

SECTION C - PERMIT COORDINATION (ONLY REQUIRED FOR LAND DEVELOPMENT)

Question	YES	NO
1. Will the project involve construction activity that disturbs five or more acres of land?		X
2. Will the project involve discharge of industrial wastewater or stormwater to a dry swale, surface water, ground water or an existing sanitary sewer system?		X
3. Will the project involve the construction and operation of industrial waste treatment facility?		X
4. Is onsite sewage disposal proposed for your project?		X
5. Will the project involve construction of sewage treatment facilities, sanitary sewer, or sewage pumping station?		X
6. Is a stormwater collection and discharge system proposed for this project?		X
7. Will any work associated with this project take place in or near a stream, waterway, or wetland?		X
8. Does the project involve dredging or construction of any dam, pier, bridge or outfall pipe?		X
9. Will any solid waste or liquid wastes be generated as a result of the project?	X	
10. Is a State Park located within two miles from your project?		X

SECTION D - CERTIFICATION

I certify that I have the authority to submit this Permit Application on behalf of the applicant named herein and that the information provided in this application is true and correct to the best of my knowledge and information.

Signature John Pickering Date 9/4/15 Address 3144 Passyunk Avenue, Philadelphia, PA 19145

Name & Title SVP Central Engineering John D. Pickering Phone 215-339-7440 Fax 215-339-2657

SECTION E - OFFICIAL USE ONLY

Application No.	Plant ID	Health District	Census Tract	Fee	Date Received
15253	01501	2		1700	9·4·15

Approved by	Date	Conformance by	Date

SECTION F 1 - GENERAL SOURCE INFORMATION

1. SOURCE						2. NORMAL PROCESS OPERATING SCHEDULE						
	A. Type Source (Describe)	B. Manufacturer of Source	C. Model No.	D. Rated Capacity (Specify units)	E. Type of Materials Processed	A. Amount Processed/yr. (Specify units)	B. Average hr/day	C. Total hr/yr	D. % Throughput/Quarter			
									1st	2nd	3rd	4th
1	**Unit 864 PH-7R Heater (See attached report)**	**N/A**	**N/A**	**70.0 MMBtu/hr**								
2	**Unit 864 PH-1 Heater (See attached report)**	**N/A**	**N/A**	**74.9 MMBtu/hr**								
3	**Unit 864 PH-11 Heater (See attached report)**	**N/A**	**N/A**	**74.0 MMBtu/hr**								
4	**Unit 864 PH-12 Heater (See attached report)**	**N/A**	**N/A**	**85.1 MMBtu/hr**								
5	**Unit 870 H-3 Heater (See attached report)**	**N/A**	**N/A**	**110.0 MMBtu/hr**								
6	**See attached report for affected sources.**											

3. ESTIMATED FUEL USAGE (Specify Units)							4. ANNUAL FUEL USAGE						
A. Used in Unit	B. Type Fuel	C. Average Hourly Rate	D. Maximum Hourly Rate	E. Percent Sulfur	F. Percent Ash	G. Heating Value	A. Annual Amounts	B. Average hr/day	C. Total hr/yr	D. % Throughput/Quarter			
										1st	2nd	3rd	4th
Unit 864 PH-7R Heater	**Refinery Fuel Gas**		**70.0 MMBtu/hr**			**1028 Btu/scf**		**24 hr/day**	**8760 hr/yr**				
Unit 864 PH-1 Heater	**Refinery Fuel Gas**		**74.9 MMBtu/hr**			**1028 Btu/scf**		**24 hr/day**	**8760 hr/yr**				
Unit 864 PH-11 Heater	**Refinery Fuel Gas**		**74.0 MMBtu/hr**			**1028 Btu/scf**		**24 hr/day**	**8760 hr/yr**				
Unit 864 PH-12 Heater	**Refinery Fuel Gas**		**85.1 MMBtu/hr**			**1028 Btu/scf**		**24 hr/day**	**8760 hr/yr**				
Unit 870 H-3 Heater	**Refinery Fuel Gas**		**110.0 MMBtu/hr**			**1028 Btu/scf**		**24 hr/day**	**8760 hr/yr**				
	See attached report for affected sources.												

5. IMPORTANT: **Attach on a separate sheet a flow diagram of process giving all (gaseous, liquid, and solid) flow rates . Also list raw materials charged to process equipment and the amounts charged (tons/hour, etc.) at rated capacity (give maximum, minimum and average charges describing fully expected variations in production rates). Indicate (on diagram) all points where contaminants are controlled (location of water sprays, hoods or other pickup points, etc.).**

SECTION F 1 - GENERAL SOURCE INFORMATION, CONTINUED

6. Describe process equipments in detail.

Relevant process equipment include refinery fuel gas fired heaters, a recirculating cooling tower, the Unit 867 Sulfur Recovery Unit, and fugitive emission components.

See the attached report for additional details.

7. Describe fully the methods used to monitor and record all operating conditions that may affect the emission of air contaminants. Provide detailed information to show that these methods provided are adequate.

PES will be replacing the existing Unit 864 PH-7 heater (nominal firing duty of 45.0 MMBtu/hr) with an existing idle heater (LSG H-1) located at the former Sunoco Inc. (R&M) Eagle Point Refinery in New Jersey. The replacement heater will be designated Unit 864 PH-7R. This replacement heater is equipped with ULNB that will achieve a NO_x emission rate of 0.02 lb/MMBtu. PES will also be installing a new refinery fuel gas fired heater designated Unit 870 H-3 (nominal firing duty of 110.0 MMBtu/hr) and will be equipped with ULNB that will achieve a NO_x emission rate of 0.03 lb/MMBtu. Lastly, as part of the Project, PES has elected to install LNB on the Unit 864 PH-1, Unit 864 PH-11, and Unit 864 PH-12 heaters that will achieve a NO_x emission rate of 0.06 lb/MMBtu.

See the attached report for additional details.

8. Describe modifications to process equipments in detail.

See the attached report for additional details.

9. Attach any and all additional information necessary to adequately describe the process equipment and to perform a thorough evaluation of the extent and nature of its emissions.

See the attached report that includes a BAT analysis.

- Provide equipment information on this page if sources do not belong to special categories in F2 to F8, otherwise remove this page from this application.
- If there are more equipment, copy this page and fill in the information as indicated

SECTION F 2 - COMBUSTION UNITS INFORMATION

1. COMBUSTION UNITS – **See the attached report sections.**

A. Manufacturer	B. Model No.	C. Unit No.
Not applicable	**Not applicable**	**Unit 864 PH-7R Heater**
D. Rated heat input (Btu/hr)	E. Peak heat input (Btu/hr)	F. Use
70.0 MMBtu/hr		**Process heat**

G. Method firing

☐ Pulverized ☐ Spreader Stoker ☐ Cyclone ☐ Tangential ☒ Normal ☐ Fluidized bed ☐ Other _____

2. FUEL REQUIREMENTS

TYPE	*QUANTITY HOURLY*	*QUANTITY ANNUALLY*	*SULFUR*	*ASH*	*BTU CONTENT*
OIL NUMBER _____	GPH at 60 ^{0}F	x10^3 Gal.	% by wt.	% by wt.	Btu/Gal. & lbs/Gal. @ 60°F
NATURAL GAS	SCFH	x10^6 SCF	gr/100 SCF		Btu/SCF
OTHER **Refinery Fuel Gas**	**68.1 MSCFH**		**162 ppmv H_2S maximum**		**1,028 Btu/SCF**

3. COMBUSTION AIDS, CONTROLS, AND MONITORS

☐ A. Overfire jets	Type	Number	Height above grate
☐ B. Draft controls	Type		
☐ C. Oil preheat			
☐ D. Soot cleaning	Temperature (°F)	Frequency	
☐ E. Stack sprays	Method		
☐ F. Opacity monitoring device		Method	Cost
☐ G. Sulfur oxides monitoring device	Type	Method	Cost
☐ H. Nitrogen oxides monitoring device	Type	Method	Cost
☐ I. Fuel metering and/or recording devices	Type	Method	Cost
☐ J. Atomization interlocking device	Type	Method	Cost
☐ K. Collected flyash reentrainment preventative device	Type		

☐ L. Modulating controls ☐ Step

☐ Automatic

4. ☐ Flyash reinjection. (Describe operation)

5. Describe method of supplying make up air to the furnace room.

Section F 2 - Combustion Units Information, Continued

- Use this page for Degreaser, otherwise remove this page from this application.
- If you have more units, copy this page and fill in the information as indicated

6. OPERATING SCHEDULE

24 hours/day 7 days/week 52 weeks/year

7. SEASONAL PERIODS (MONTHS)

Operating using primary fuel _____ to _____

Operating using secondary fuel _____ to _____

Non-operating

_____ to _____

8. If heat input is in excess of 250 x 10 6 Btu/hr., describe fully the methods used to record the following: rate of fuel burned; heating value, sulfur and ash content of fuels; smoke, sulfur oxides and nitrogen oxides emissions; and if electric generating plant, the average electrical output and the minimum and maximum hourly generation rate.

PES will continue to monitor, record, and report with applicable requirements found in the Philadelphia Refinery's existing Title V permit and the Consent Decree.

9. Describe modifications to boiler in detail.

See the attached report sections.

10. Type and method of disposal of all waste materials generated by this boiler.

(Is a Solid Waste Disposal Permit needed? ☐ Yes ☒ No)

11. Briefly describe the method of handling the waste water from this boiler and its associated air pollution control equipment.

(Is a Water quality Management Permit needed? ☐ Yes ☒ No)

12. Attach any and all additional information necessary to perform a thorough evaluation of this boiler.

See the attached report sections.

- Use this page for Degreaser, otherwise remove this page from this application.
- If you have more units, copy this page and fill in the information as indicated

SECTION F 2 - COMBUSTION UNITS INFORMATION

1. COMBUSTION UNITS – **See the attached report sections.**

A. Manufacturer	B. Model No.	C. Unit No.
Not applicable	**Not applicable**	**Unit 864 PH-1 Heater**
D. Rated heat input (Btu/hr)	E. Peak heat input (Btu/hr)	F. Use
74.9 MMBtu/hr		**Process heat**

G. Method firing

☐ Pulverized ☐ Spreader Stoker ☐ Cyclone ☐ Tangential ☒ Normal ☐ Fluidized bed ☐ Other _____

2. FUEL REQUIREMENTS

TYPE	*QUANTITY HOURLY*	*QUANTITY ANNUALLY*	*SULFUR*	*ASH*	*BTU CONTENT*
OIL NUMBER _____	GPH at 60 °F	x10³ Gal.	% by wt.	% by wt.	Btu/Gal. & lbs/Gal. @ 60°F
NATURAL GAS	SCFH	x10⁶ SCF	gr/100 SCF		Btu/SCF
OTHER **Refinery Fuel Gas**	**72.9 MSCFH**		**162 ppmv H_2S maximum**		**1,028 Btu/SCF**

3. COMBUSTION AIDS, CONTROLS, AND MONITORS

☐ A. Overfire jets	Type	Number	Height above grate
☐ B. Draft controls	Type		
☐ C. Oil preheat			
☐ D. Soot cleaning	Temperature (°F)	Frequency	
☐ E. Stack sprays	Method		
☐ F. Opacity monitoring device		Method	Cost
☐ G. Sulfur oxides monitoring device	Type	Method	Cost
☐ H. Nitrogen oxides monitoring device	Type	Method	Cost
☐ I. Fuel metering and/or recording devices	Type	Method	Cost
☐ J. Atomization interlocking device	Type	Method	Cost
☐ K. Collected flyash reentrainment preventative device	Type		

☐ L. Modulating controls ☐ Step ☐ Automatic

4. ☐ Flyash reinjection. (Describe operation)

5. Describe method of supplying make up air to the furnace room.

- Use this page for Degreaser, otherwise remove this page from this application.
- If you have more units, copy this page and fill in the information as indicated

SECTION F 2 - COMBUSTION UNITS INFORMATION, CONTINUED

6. OPERATING SCHEDULE

24 hours/day 7 days/week 52 weeks/year

7. SEASONAL PERIODS (MONTHS)

Operating using primary fuel _____ to _____

Operating using secondary fuel _____ to _____

Non-operating

_____ to _____

8. If heat input is in excess of 250 x 10^6 Btu/hr., describe fully the methods used to record the following: rate of fuel burned; heating value, sulfur and ash content of fuels; smoke, sulfur oxides and nitrogen oxides emissions; and if electric generating plant, the average electrical output and the minimum and maximum hourly generation rate.

PES will continue to monitor, record, and report with applicable requirements found in the Philadelphia Refinery's existing Title V permit and the Consent Decree.

9. Describe modifications to boiler in detail.

See the attached report sections.

10. Type and method of disposal of all waste materials generated by this boiler.
(Is a Solid Waste Disposal Permit needed? ☐ Yes ☒ No)

11. Briefly describe the method of handling the waste water from this boiler and its associated air pollution control equipment.
(Is a Water quality Management Permit needed? ☐ Yes ☒ No)

12. Attach any and all additional information necessary to perform a thorough evaluation of this boiler.

See the attached report sections.

- Use this page for Degreaser, otherwise remove this page from this application.
- If you have more units, copy this page and fill in the information as indicated

SECTION F 2 - COMBUSTION UNITS INFORMATION

1. COMBUSTION UNITS – **See the attached report sections.**

A. Manufacturer	B. Model No.	C. Unit No.
Not applicable	**Not applicable**	**Unit 864 PH-11 Heater**
D. Rated heat input (Btu/hr)	E. Peak heat input (Btu/hr)	F. Use
74.0 MMBtu/hr		**Process heat**

G. Method firing

☐ Pulverized ☐ Spreader Stoker ☐ Cyclone ☐ Tangential ☒ Normal ☐ Fluidized bed ☐ Other _____

2. FUEL REQUIREMENTS

TYPE	*QUANTITY HOURLY*	*QUANTITY ANNUALLY*	*SULFUR*	*ASH*	*BTU CONTENT*
OIL NUMBER _____	GPH at 60 °F	x10^3 Gal.	% by wt.	% by wt.	Btu/Gal. & lbs/Gal. @ 60°F
NATURAL GAS	SCFH	x10^6 SCF	gr/100 SCF		Btu/SCF
OTHER **Refinery Fuel Gas**	**72.0 MSCFH**		**162 ppmv H_2S maximum**		**1,028 Btu/SCF**

3. COMBUSTION AIDS, CONTROLS, AND MONITORS

☐ A. Overfire jets	Type	Number	Height above grate
☐ B. Draft controls	Type		
☐ C. Oil preheat			
☐ D. Soot cleaning	Temperature (°F)	Frequency	
☐ E. Stack sprays	Method		
☐ F. Opacity monitoring device		Method	Cost
☐ G. Sulfur oxides monitoring device	Type	Method	Cost
☐ H. Nitrogen oxides monitoring device	Type	Method	Cost
☐ I. Fuel metering and/or recording devices	Type	Method	Cost
☐ J. Atomization interlocking device	Type	Method	Cost
☐ K. Collected flyash reentrainment preventative device	Type		

☐ L. Modulating controls ☐ Step ☐ Automatic

4. ☐ Flyash reinjection. (Describe operation)

5. Describe method of supplying make up air to the furnace room.

- Use this page for Degreaser, otherwise remove this page from this application.
- If you have more units, copy this page and fill in the information as indicated

SECTION F 2 - COMBUSTION UNITS INFORMATION, CONTINUED

6. OPERATING SCHEDULE

24 hours/day 7 days/week 52 weeks/year

7. SEASONAL PERIODS (MONTHS)

Operating using primary fuel _____ to _____

Operating using secondary fuel _____ to _____

Non-operating _____ to _____

8. If heat input is in excess of 250 x 10^6 Btu/hr., describe fully the methods used to record the following: rate of fuel burned; heating value, sulfur and ash content of fuels; smoke, sulfur oxides and nitrogen oxides emissions; and if electric generating plant, the average electrical output and the minimum and maximum hourly generation rate.

PES will continue to monitor, record, and report with applicable requirements found in the Philadelphia Refinery's existing Title V permit and the Consent Decree.

9. Describe modifications to boiler in detail.

See the attached report sections.

10. Type and method of disposal of all waste materials generated by this boiler.
(Is a Solid Waste Disposal Permit needed? ☐ Yes ☒ No)

11. Briefly describe the method of handling the waste water from this boiler and its associated air pollution control equipment.
(Is a Water quality Management Permit needed? ☐ Yes ☒ No)

12. Attach any and all additional information necessary to perform a thorough evaluation of this boiler.

See the attached report sections.

- Use this page for Degreaser, otherwise remove this page from this application.
- If you have more units, copy this page and fill in the information as indicated

SECTION F 2 - COMBUSTION UNITS INFORMATION

1. COMBUSTION UNITS – **See the attached report sections.**

A. Manufacturer	B. Model No.	C. Unit No.
Not applicable	**Not applicable**	**Unit 864 PH-12 Heater**
D. Rated heat input (Btu/hr)	E. Peak heat input (Btu/hr)	F. Use
85.1 MMBtu/hr		**Process heat**

G. Method firing

☐ Pulverized ☐ Spreader Stoker ☐ Cyclone ☐ Tangential ☒ Normal ☐ Fluidized bed ☐ Other _____

2. FUEL REQUIREMENTS

TYPE	*QUANTITY HOURLY*	*QUANTITY ANNUALLY*	*SULFUR*	*ASH*	*BTU CONTENT*
OIL NUMBER _____	GPH at 60 ^{0}F	x10^3 Gal.	% by wt.	% by wt.	Btu/Gal. & lbs/Gal. @ 60°F
NATURAL GAS	SCFH	x10^6 SCF	gr/100 SCF		Btu/SCF
OTHER **Refinery Fuel Gas**	**82.8 MSCFH**		**162 ppmv H_2S maximum**		**1,028 Btu/SCF**

3. COMBUSTION AIDS, CONTROLS, AND MONITORS

☐ A. Overfire jets	Type	Number	Height above grate
☐ B. Draft controls	Type		
☐ C. Oil preheat			
☐ D. Soot cleaning	Temperature (°F)	Frequency	
☐ E. Stack sprays	Method		
☐ F. Opacity monitoring device		Method	Cost
☐ G. Sulfur oxides monitoring device	Type	Method	Cost
☐ H. Nitrogen oxides monitoring device	Type	Method	Cost
☐ I. Fuel metering and/or recording devices	Type	Method	Cost
☐ J. Atomization interlocking device	Type	Method	Cost
☐ K. Collected flyash reentrainment preventative device	Type		

☐ L. Modulating controls ☐ Step ☐ Automatic

4. ☐ Flyash reinjection. (Describe operation)

5. Describe method of supplying make up air to the furnace room.

- Use this page for Degreaser, otherwise remove this page from this application.
- If you have more units, copy this page and fill in the information as indicated

SECTION F 2 - COMBUSTION UNITS INFORMATION, CONTINUED

6. OPERATING SCHEDULE

24 hours/day 7 days/week 52 weeks/year

7. SEASONAL PERIODS (MONTHS)

Operating using primary fuel _____ to _____

Operating using secondary fuel _____ to _____

Non-operating

_____ to _____

8. If heat input is in excess of 250 x 10^6 Btu/hr., describe fully the methods used to record the following: rate of fuel burned; heating value, sulfur and ash content of fuels; smoke, sulfur oxides and nitrogen oxides emissions; and if electric generating plant, the average electrical output and the minimum and maximum hourly generation rate.

PES will continue to monitor, record, and report with applicable requirements found in the Philadelphia Refinery's existing Title V permit and the Consent Decree.

9. Describe modifications to boiler in detail.

See the attached report sections.

10. Type and method of disposal of all waste materials generated by this boiler.
(Is a Solid Waste Disposal Permit needed? ☐ Yes ☒ No)

11. Briefly describe the method of handling the waste water from this boiler and its associated air pollution control equipment.
(Is a Water quality Management Permit needed? ☐ Yes ☒ No)

12. Attach any and all additional information necessary to perform a thorough evaluation of this boiler.

See the attached report sections.

- Use this page for Degreaser, otherwise remove this page from this application.
- If you have more units, copy this page and fill in the information as indicated

SECTION F 2 - COMBUSTION UNITS INFORMATION

1. COMBUSTION UNITS – **See the attached report sections.**

A. Manufacturer	B. Model No.	C. Unit No.
Not applicable	**Not applicable**	**Unit 870 H-3 Heater**
D. Rated heat input (Btu/hr)	E. Peak heat input (Btu/hr)	F. Use
110.0 MMBtu/hr		**Process heat**

G. Method firing

☐ Pulverized ☐ Spreader Stoker ☐ Cyclone ☐ Tangential ☒ Normal ☐ Fluidized bed ☐ Other _____

2. FUEL REQUIREMENTS

TYPE	*QUANTITY HOURLY*	*QUANTITY ANNUALLY*	*SULFUR*	*ASH*	*BTU CONTENT*
OIL NUMBER _____	GPH at 60 °F	x10³ Gal.	% by wt.	% by wt.	Btu/Gal. & lbs/Gal. @ 60°F
NATURAL GAS	SCFH	x10⁶ SCF	gr/100 SCF		Btu/SCF
OTHER **Refinery Fuel Gas**	**107.0 MSCFH**		**162 ppmv H_2S maximum**		**1,028 Btu/SCF**

3. COMBUSTION AIDS, CONTROLS, AND MONITORS

☐ A. Overfire jets	Type	Number	Height above grate
☐ B. Draft controls	Type		
☐ C. Oil preheat			
☐ D. Soot cleaning	Temperature (°F)	Frequency	
☐ E. Stack sprays	Method		
☐ F. Opacity monitoring device		Method	Cost
☐ G. Sulfur oxides monitoring device	Type	Method	Cost
☒ H. Nitrogen oxides monitoring device	Type – **CEMS**	Method - **Chemiluminescence**	Cost
☐ I. Fuel metering and/or recording devices	Type	Method	Cost
☐ J. Atomization interlocking device	Type	Method	Cost
☐ K. Collected flyash reentrainment preventative device	Type		

☐ L. Modulating controls ☐ Step ☐ Automatic

4. ☐ Flyash reinjection. (Describe operation)

5. Describe method of supplying make up air to the furnace room.

- Use this page for Degreaser, otherwise remove this page from this application.
- If you have more units, copy this page and fill in the information as indicated

SECTION F 2 - COMBUSTION UNITS INFORMATION, CONTINUED

6. OPERATING SCHEDULE

24 hours/day 7 days/week 52 weeks/year

7. SEASONAL PERIODS (MONTHS)

Operating using primary fuel _____ to _____

Operating using secondary fuel _____ to _____

Non-operating

_____ to _____

8. If heat input is in excess of 250 x 10^6 Btu/hr., describe fully the methods used to record the following: rate of fuel burned; heating value, sulfur and ash content of fuels; smoke, sulfur oxides and nitrogen oxides emissions; and if electric generating plant, the average electrical output and the minimum and maximum hourly generation rate.

PES will continue to monitor, record, and report with applicable requirements found in the Philadelphia Refinery's existing Title V permit and the Consent Decree.

9. Describe modifications to boiler in detail.

See the attached report sections.

10. Type and method of disposal of all waste materials generated by this boiler.
(Is a Solid Waste Disposal Permit needed? ☐ Yes ☒ No)

11. Briefly describe the method of handling the waste water from this boiler and its associated air pollution control equipment.
(Is a Water quality Management Permit needed? ☐ Yes ☒ No)

12. Attach any and all additional information necessary to perform a thorough evaluation of this boiler.

See the attached report sections.

- Use this page for Degreaser, otherwise remove this page from this application.
- If you have more units, copy this page and fill in the information as indicated

SECTION G - FLUE AND AIR CONTAMINANT EMISSION INFORMATION

1. STACK AND EXHAUSTER

Unit 864 PH-7R Heater Stack

A. Outlet volume of exhaust gases

19,612 CFM @ 424 °F ____ % Moisture

B, Exhauster (attach fan curves)

_____ in w.g. _____ HP @ _____ RPM

C . Stack height above grade (ft) 152.5

Grade elevation (ft) _____

Distance from discharge to nearest property line(ft) _____

D Stack diameter (ft) or Outlet duct area (sq. ft.)

5.92 feet (71 inches)

E Weather Cap

☐ YES ☒ NO

F. Indicate on an attached sheet the location of sampling ports with respect to exhaust fan, breeching, etc. Give all necessary dimensions.

To be determined.

2 POTENTIAL PROCESS EMISSIONS (OUTLET FROM PROCESS, BEFORE ANY CONTROL EQUIPMENT)

See the attached report sections.

A. Particulate loading (lbs/hr or gr/DSCF)

B. Specific gravity of particulate (not bulk density)

C . Attached particle size distribution information

D. Specify gaseous contaminants and concentration

Contaminant		Concentration		VOC Contaminants		Concentration	
(1)	SO_x	_____ ppm (Vol.)	_____ lbs/hr	(4)	_____	_____ ppm (Vol.)	_____ lbs/hr
(2)	NO_x	_____ ppm (Vol.)	_____ lbs/hr	(5)	_____	_____ ppm (Vol.)	_____ lbs/hr
(3)	CO	_____ ppm (Vol.)	_____ lbs/hr	(6)	_____	_____ ppm (Vol.)	_____ lbs/hr

E. Does process vent through the control device ? ☐ YES ☒ NO

- If YES continue and fill out the appropriate SECTION H - CONTROL EQUIPMENT
- If NO skip to SECTION I - MISCELLANEOUS INFORMATION

F. Can the control equipment be bypassed: (If Yes, explain) ☐ YES ☒ NO

3. ATMOSPHERIC EMISSIONS

A. Particulate matter emissions (lbs/hr or gr/DSCF)

See the attached report sections.

B. Gaseous contaminant emissions

Contaminants		Concentration		VOC Contaminants		Concentration	
(1)	SO_X	_____ ppm (Vol.)	_____ lbs/hr	(4)	_____	_____ ppm (Vol.)	_____ lbs/hr
(2)	NO_X	_____ ppm (Vol.)	_____ lbs/h	(5)	_____	_____ ppm (Vol.)	_____ lbs/hr
(3)	CO	_____ ppm (Vol.)	_____ lbs/h)	(6)	_____	_____ ppm (Vol.)	_____ lbs/hr

See the attached report sections.

SECTION H - CONTROL EQUIPMENT, CONTINUED

12. COSTS – **See the attached report sections.**

A. List costs associated with control equipment. (List individual controls separately)

Control Equipment Cost:

Direct Cost:

Indirect Cost:

B. Estimated annual operating costs of control equipment only.

13. Describe modifications to control equipment in detail.

Not applicable.

14. Describe in detail the method of dust removal from the air cleaning and methods of controlling fugitive emissions from dust removal, handling and disposal.

Not applicable.

15. Does air cleaning device employ hopper heaters, hopper vibrators or hopper level detectors? If so, describe.

Not applicable.

16. Attach manufacturer's performance guarantees and/or warranties for each of the major components of the control system (or complete system).

17. Attach the maintenance schedule for the control equipment and any part of the process equipment that if in disrepair would increase the air contaminant emissions. Periodic maintenance reports are to be submitted to the Department.

Maintenance will continue to be provided as per the manufacturer's recommendations and the Title V Permit.

18. Attach any and all additional information necessary to thoroughly evaluate the control equipment.

See the attached report sections.

- Provide control equipment information on this page if it pertains to this application, otherwise remove this page from the application.
- If there are more of the same type of control equipment, copy that page and fill in the information as indicated.
- Control equipment can be found from a manufacturer catalogue or vendors.

SECTION G - FLUE AND AIR CONTAMINANT EMISSION INFORMATION

1. STACK AND EXHAUSTER

Unit 870 H-3 Heater Stack

A. Outlet volume of exhaust gases

27,000 CFM @ **425** °F **0** % Moisture

B, Exhauster (attach fan curves)

_____ in w.g. _____ HP @ _____ RPM

C . Stack height above grade (ft) **150 feet**

Grade elevation (ft) _____

Distance from discharge to nearest property line(ft) _____

D Stack diameter (ft) or Outlet duct area (sq. ft.)

6.0 feet

E Weather Cap

☐ YES ☒ NO

F. Indicate on an attached sheet the location of sampling ports with respect to exhaust fan, breeching, etc. Give all necessary dimensions.

To be determined.

2 POTENTIAL PROCESS EMISSIONS (OUTLET FROM PROCESS, BEFORE ANY CONTROL EQUIPMENT)

See the attached report sections.

A. Particulate loading (lbs/hr or gr/DSCF)

B. Specific gravity of particulate (not bulk density)

C . Attached particle size distribution information

D. Specify gaseous contaminants and concentration

Contaminant		Concentration		VOC Contaminants		Concentration	
(1)	SO_x	_____ ppm (Vol.)	_____ lbs/hr	(4)	_____	_____ ppm (Vol.)	_____ lbs/hr
(2)	NO_x	_____ ppm (Vol.)	_____ lbs/hr	(5)	_____	_____ ppm (Vol.)	_____ lbs/hr
(3)	CO	_____ ppm (Vol.)	_____ lbs/hr	(6)	_____	_____ ppm (Vol.)	_____ lbs/hr

E. Does process vent through the control device ? ☐ YES ☒ NO

- If YES continue and fill out the appropriate SECTION H - CONTROL EQUIPMENT
- If NO skip to SECTION I - MISCELLANEOUS INFORMATION

F. Can the control equipment be bypassed: (If Yes, explain) ☐ YES ☒ NO

3. ATMOSPHERIC EMISSIONS

A. Particulate matter emissions (lbs/hr or gr/DSCF)

See the attached report sections.

B. Gaseous contaminant emissions

Contaminants		Concentration		VOC Contaminants		Concentration	
(1)	SO_X	_____ ppm (Vol.)	_____ lbs/hr	(4)	_____	_____ ppm (Vol.)	_____ lbs/hr
(2)	NO_X	_____ ppm (Vol.)	_____ lbs/h	(5)	_____	_____ ppm (Vol.)	_____ lbs/hr
(3)	CO	_____ ppm (Vol.)	_____ lbs/h)	(6)	_____	_____ ppm (Vol.)	_____ lbs/hr

See the attached report sections.

- Provide control equipment information on this page if it pertains to this application, otherwise remove this page from the application.
- If there are more of the same type of control equipment, copy that page and fill in the information as indicated.
- Control equipment can be found from a manufacturer catalogue or vendors.

SECTION H - CONTROL EQUIPMENT, CONTINUED

12. COSTS – **See the attached report sections.**

A. List costs associated with control equipment. (List individual controls separately)

Control Equipment Cost:

Direct Cost:

Indirect Cost:

B. Estimated annual operating costs of control equipment only.

13. Describe modifications to control equipment in detail.

Not applicable.

14. Describe in detail the method of dust removal from the air cleaning and methods of controlling fugitive emissions from dust removal, handling and disposal.

Not applicable.

15. Does air cleaning device employ hopper heaters, hopper vibrators or hopper level detectors? If so, describe.

Not applicable.

16. Attach manufacturer's performance guarantees and/or warranties for each of the major components of the control system (or complete system).

17. Attach the maintenance schedule for the control equipment and any part of the process equipment that if in disrepair would increase the air contaminant emissions. Periodic maintenance reports are to be submitted to the Department.

Maintenance will be provided as per the manufacturer's recommendations and the Title V Permit.

18. Attach any and all additional information necessary to thoroughly evaluate the control equipment.

See the attached report sections.

- Provide control equipment information on this page if it pertains to this application, otherwise remove this page from the application.
- If there are more of the same type of control equipment, copy that page and fill in the information as indicated.
- Control equipment can be found from a manufacturer catalogue or vendors.

SECTION I - MISCELLANEOUS INFORMATION

1. Specify monitoring and recording devices will be used for monitoring and recording of the emission of air contaminants. Provide detailed information to show that the facilities provided are adequate. Include cost and maintenance information.

- ☐ Opacity monitoring system
- ☐ CO monitoring system
- ☐ HCL monitoring system
- ☐ Temperature monitoring system
- ☐ SOx monitoring system
- ☐ CO_2 monitoring system
- ☐ TRS monitoring system
- ☐ Stack flow monitoring system
- ☒ NOx monitoring system
- ☒ Oxygen monitoring system
- ☐ H_2S monitoring system
- ☐ Other _____

If checked, provide manufacturer's name, model no. and pertinent technical specifications.

No changes proposed from existing monitoring, as outlined in existing Title V Permit. The new Unit 870 H-3 Heater will have a continuous monitor installed to monitor the NOx and oxygen concentration in the heater stack that complies with NSPS Subpart Ja requirements (expected to be similar to Rosemount Model 951C Chemiluminescence).

2. Attach Air Pollution Episode Strategy (if applicable)

Not applicable.

3. If the source is subject to 25 Pa. Code Subchapter E, New Source Review requirements,

a. Demonstrate the availability of emission offset (if applicable)

PES will review the Department's Emission Reduction Credit Registry System to obtain the necessary NO_x and VOC offsets for this project. PES plans to use a portion of the remaining NO_x emission reduction credits (ERCs) generated from the shutdown of certain emissions sources at Marcus Hook as NO_x offsets. The offsets will be surrendered prior to commencement of operation of the affected sources in the manner at which is sought in this plan approval application.

b. Provide an analysis of alternate sites, sizes, production processes and environmental control techniques demonstrating that the benefits of the proposed source outweigh the environmental and social costs.

Not applicable.

See the attached report sections for details.

4. Attach calculations and any additional information necessary to thoroughly evaluate compliance with all the applicable requirements of Article III of the rules and regulations of Philadelphia Air Management, Pennsylvania Department of Environmental Protection and those requirements promulgated by the Administrator of the United States Environmental Protection Agency pursuant to the provisions of the Clean Air Act.

See the attached report sections.

5. List all attachments included in this Application.

A AMS Plan Approval Application Forms
B Site Location Map/Process Flow Diagrams
C Back-up Emissions Calculations
D Contemporaneous Emissions Tables
E Best Available Technology NOx Control Cost Effectiveness Calculations

Attachment B
Site Location Map/Process Flow Diagrams

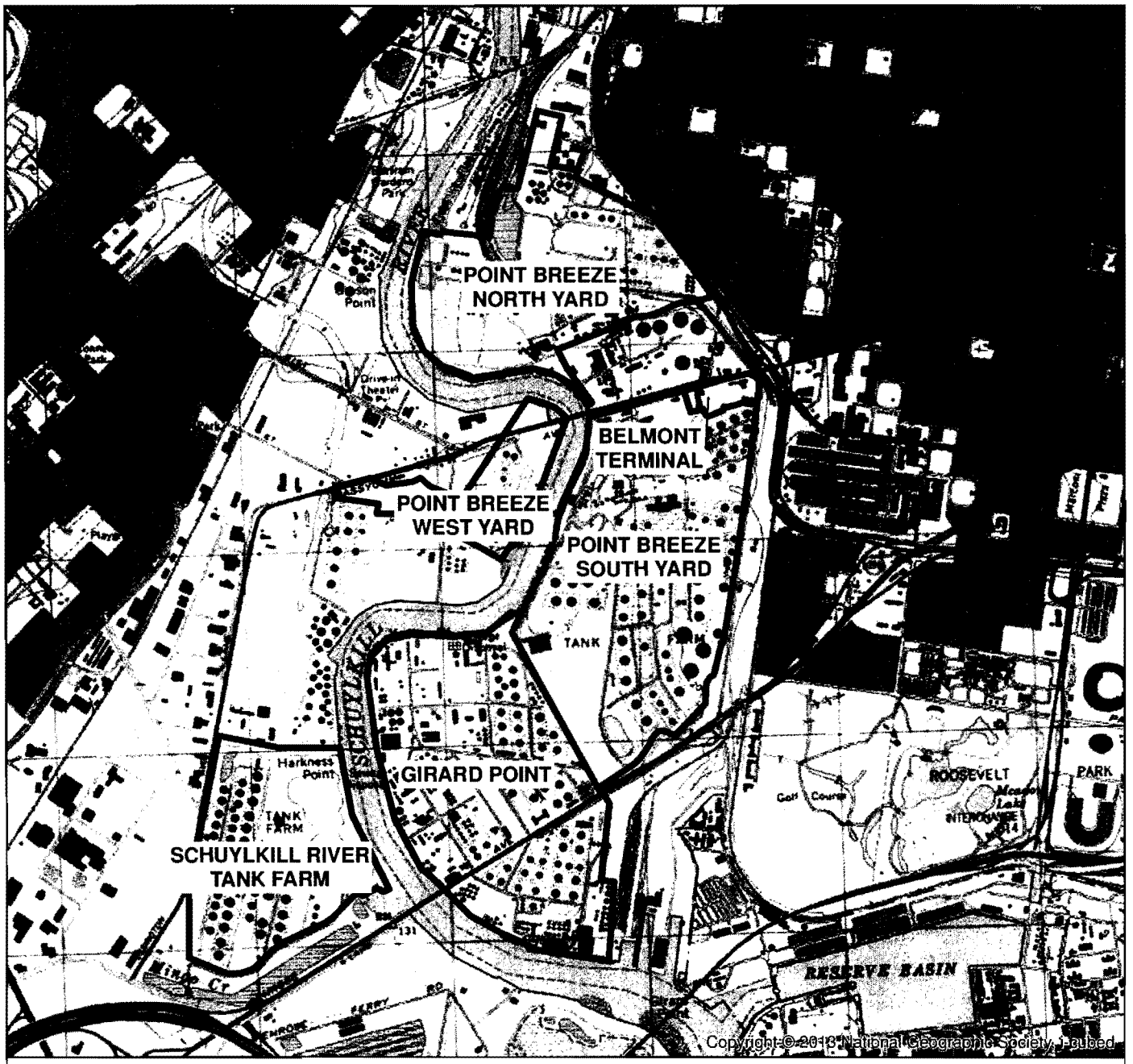

IMAGE SOURCE: DVRPC/PASDA 2010

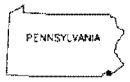

QUADRANGLE LOCATION

0 750 1,500 3,000 4,500 Feet

N

REFERENCE: USGS 7.5 MINUTE QUADRANGLE; MARCUS HOOK, PA.-NJ.-DEL., QUADRANGLE, 1993

Stantec

Stantec Consulting Services Inc.
1060 Andrew Drive, Suite 140
West Chester, Pennsylvania
19380
Tel. 610-840-2500
Fax. 610-840-2501
www.stantec.com

Prepared For:

PHILADELPHIA ENERGY SOLUTIONS
PHILADELPHIA REFINERY
3144 PASSYUNK AVENUE
PHILADELPHIA, PA. 19145

Figure Title:

SITE LOCATION MAP

DRAWN BY: TFB
CHECKED BY: JLM
APPROVED BY: JLM
DATE: 1/17/2014

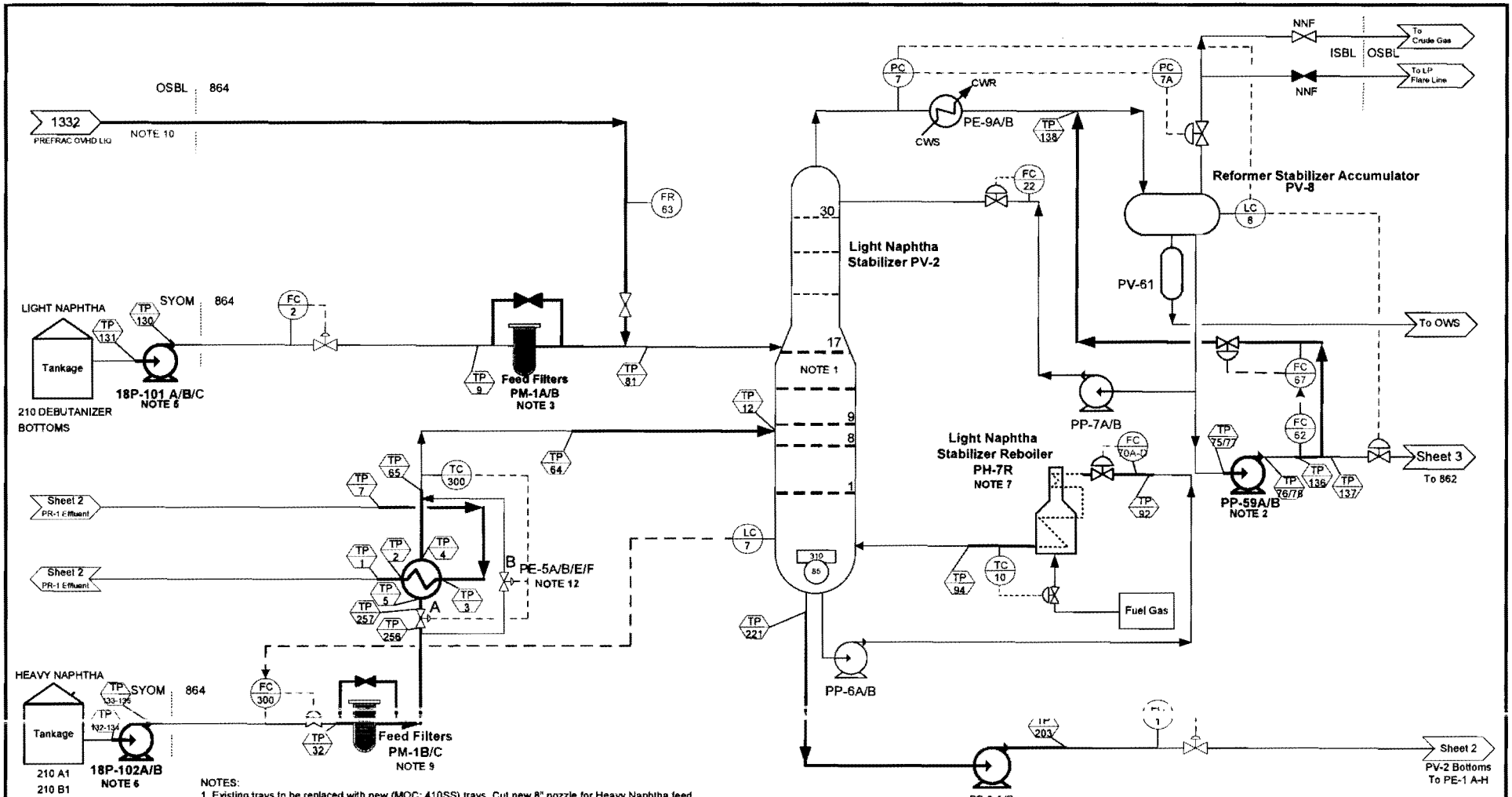

NOTES:

1. Existing trays to be replaced with new (MOC: 410SS) trays. Cut new 8" nozzle for Heavy Naphtha feed.
2. Replace PP-59A/B with new pump and motors.
3. PM-1A/B to be replaced with new filters.
4. DELETED
5. SYOM 18P-101 A to be replaced with new pump and motor. 18P-101C to be modified with a larger diameter impeller.
6. SYOM 18P-102 A/B, pumps to be replaced new pumps and motors.
7. Replace PH-7 in full with existing Eagle Point 511H-1 Heater. Modify from 8 pass to 4 pass.
8. DELETED
9. Install new PM-1C feed filter on Heavy Naphtha tank feed from SYOM. New PM-1B is a common spare.
10. 1332 PREFAC OVHD OSBL liquid line cost included in project 84OZ5149.
11. DELETED
12. PE-5 A/B, reconfigure such that reactor effluent flows through the tube side and new Heavy Naphtha line flows through shell. Recondition and add piping to PE-5 E/F shells to be utilized as stand-by spare.
13. PP-2A/B, New Unifiner Charge pumps.

Modified Equipment
Replaced Equipment
New Equipment

REV	DATE	REVISION	BY	CHK'D	APR'D
A	8/11/2015	FOR INFORMATION ONLY	PT	DG	DG

Philadelphia Energy Solutions

Process Flow Sketch
864 UNIFINER UNIT
864 UNIFINER RECONFIGURATION
(TIER 3 GASOLINE)

JOB NO.	DWG. NO.	SHEET	REV.
84OZ5148	84OZ5148-1110-SK-0001	1 of 5	A

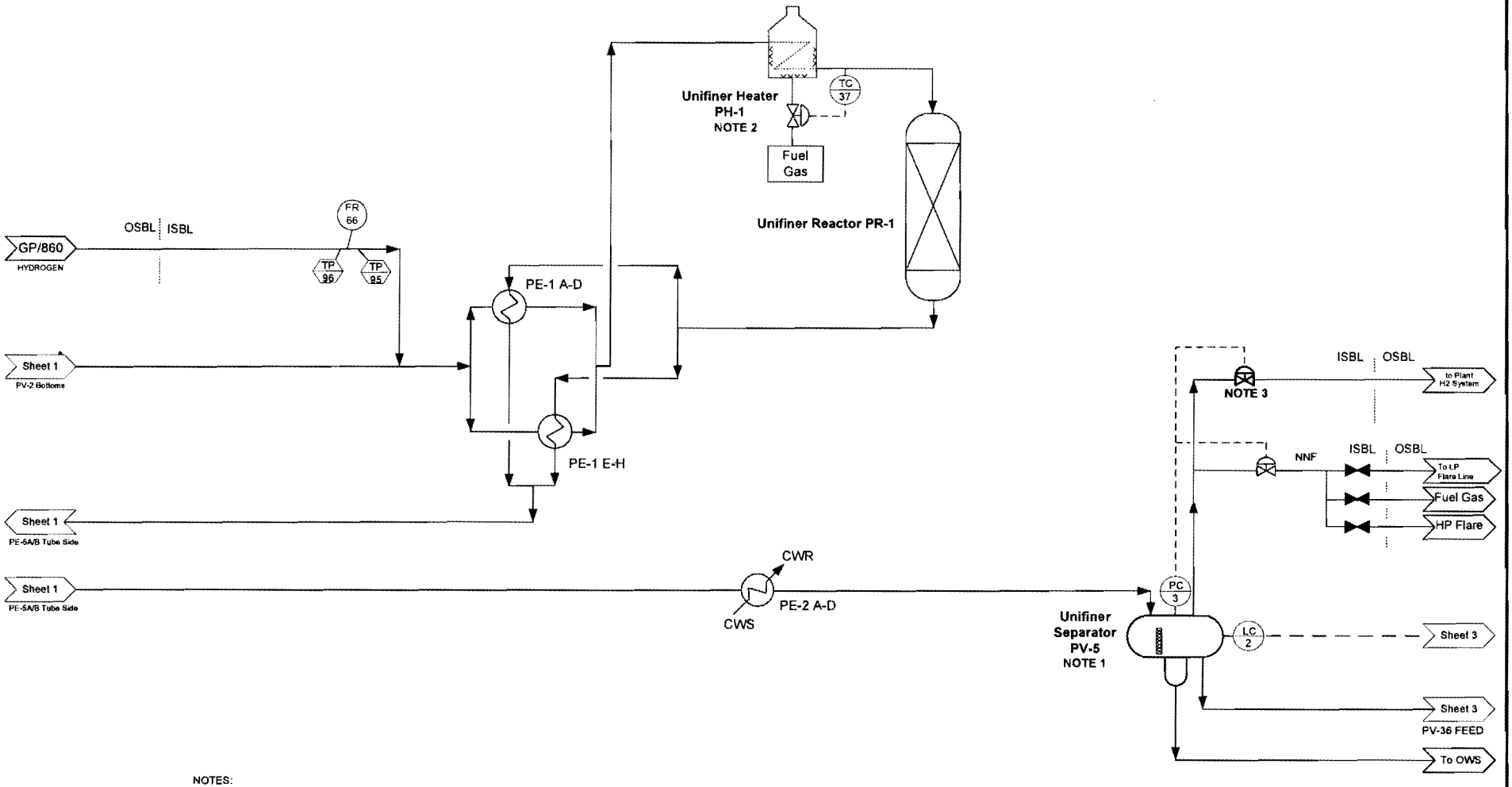

NOTES:
1. Install new coalescing pad in PV-5.
2. PH-1, install new Low NOx burners.
3. Replace PCV-5 with a new valve.

Modified Equipment
Replaced Equipment
New Equipment

REV	DATE	REVISION	BY	CHK'D	APR'D
A	8/11/2015	FOR INFORMATION ONLY	PT	DG	DG

Philadelphia Energy Solutions

Process Flow Sketch
864 UNIFINER UNIT
864 UNIFINER RECONFIGURATION
(TIER 3 GASOLINE)

JOB NO.	DWG. NO.	SHEET	REV.
84OZ5148	84OZ5148-1110-SK-0001	2 of 5	A

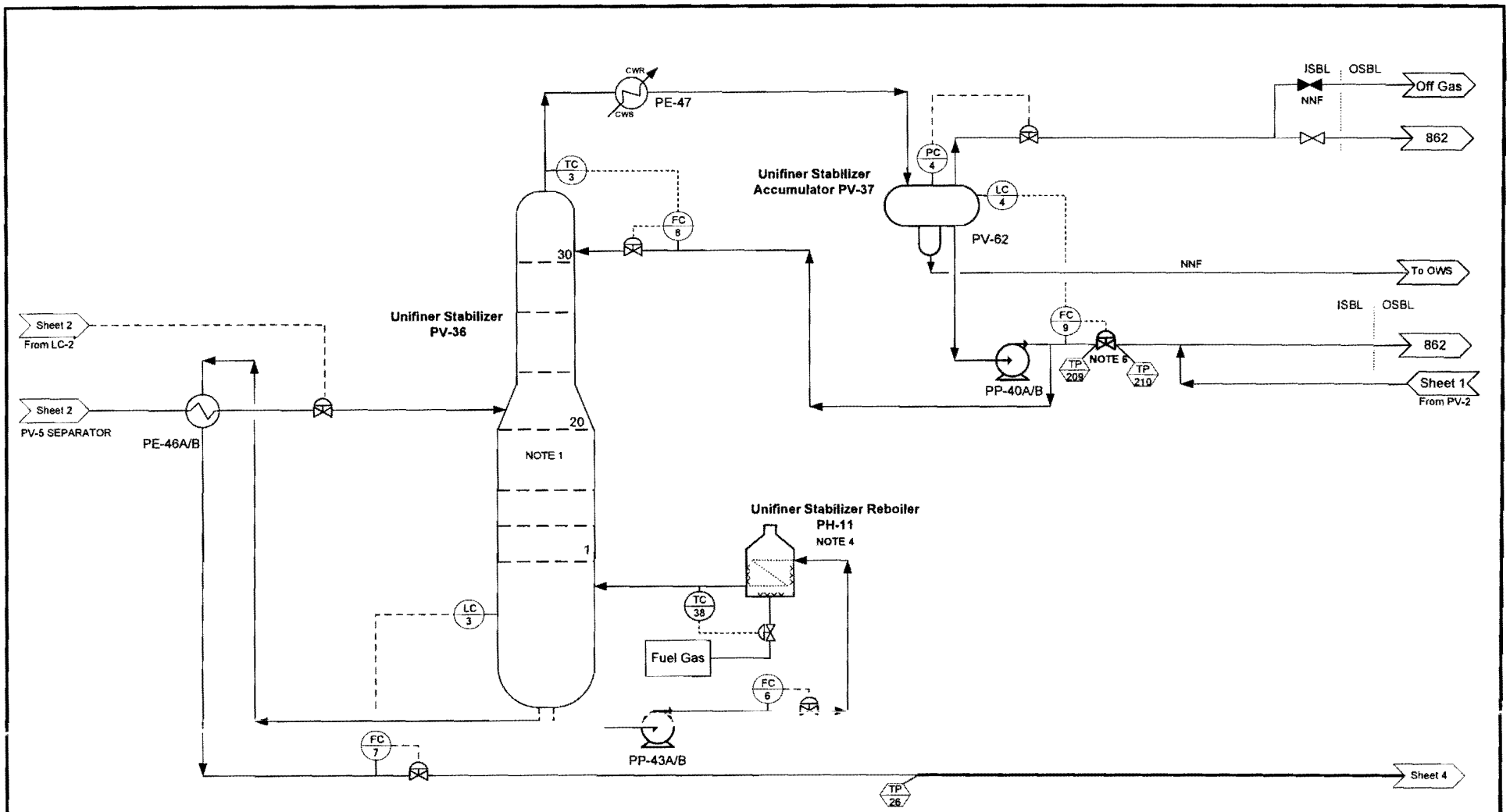

PV-38 FEED

NOTES:
1. PV-36, existing trays to be replaced with new trays (MOC: 410SS).
2. DELETED
3. DELETED
4. PH-11, install new Low NOx burners.
5. DELETED
6. FCV-9 to be placed with new valve.

Modified Equipment
Replaced Equipment
New Equipment

Philadelphia Energy Solutions

Process Flow Sketch
864 UNIFINER UNIT
864 UNIFINER RECONFIGURATION
(TIER 3 GASOLINE)

REV	DATE	REVISION	BY	CHK'D	APR'D	JOB NO.	DWG. NO.	SHEET	REV.
A	8/11/2015	FOR INFORMATION ONLY	PT	DG	DG	84OZ6148	84OZ6148-1110-SK-0001	3 of 5	A

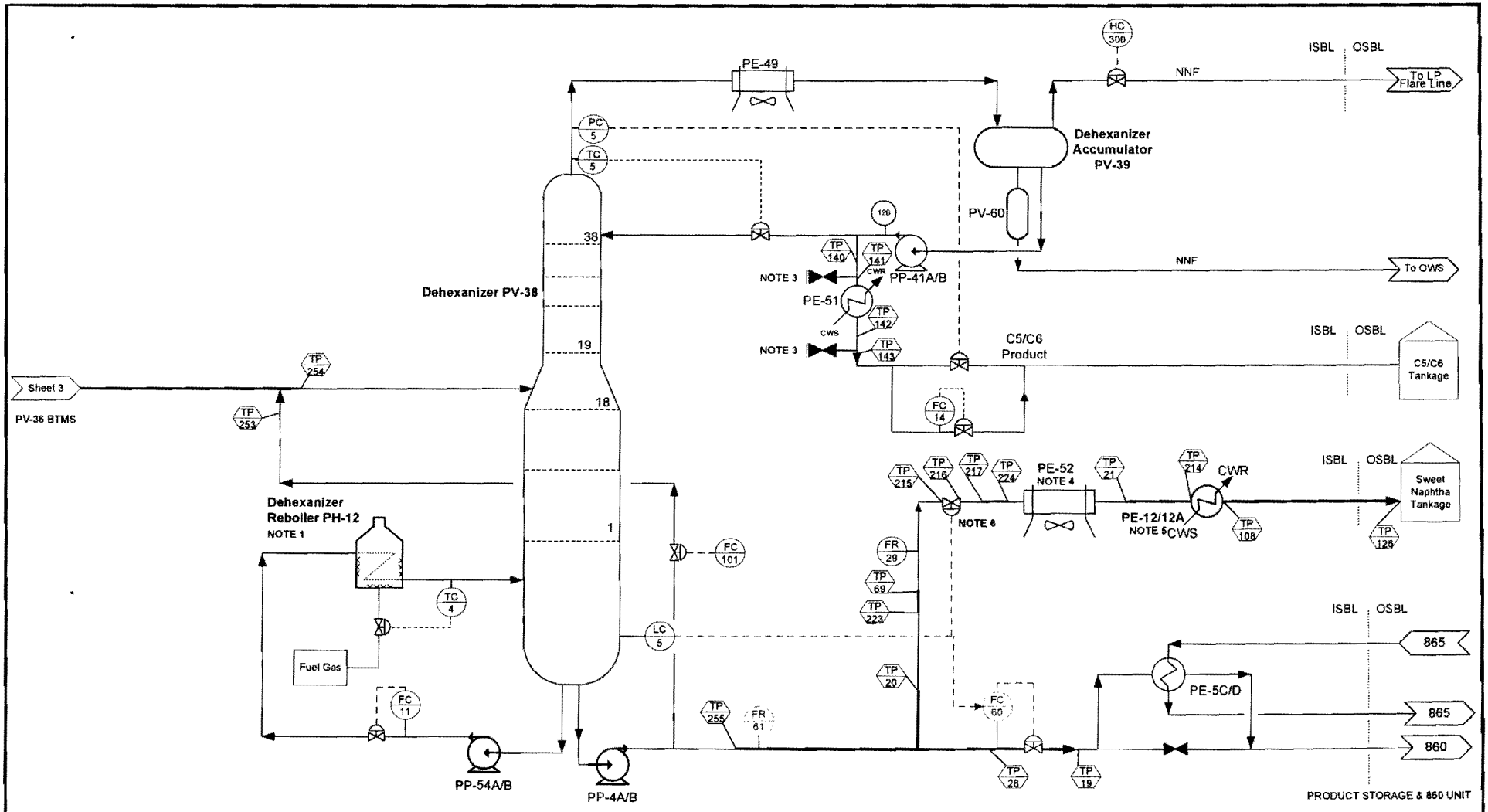

NOTES:
1. PH-12, install new Low NOx burners.
2. DELETED
3. Connections for future additional cooling.
4. PE-52, Change service from PV-2 bottoms cooling to PV-38 bottoms cooling. Some piping modifications required.
5. PE-12/12A to be returned to service and used as sweet naphtha product cooler to tankage.
6. FV-29, to be replaced with new valve. Control mode changed from flow to level.
FRC-29 to be used for indication only.

Modified Equipment
Replaced Equipment
New Equipment

REV	DATE	REVISION	BY	CHK'D	APR'D	JOB NO.	DWG. NO.	SHEET	REV.
A	8/11/2015	FOR INFORMATION ONLY	PT	DG	DG	64OZ5148	64OZ5148-1110-SK-0001	4 of 5	A

Philadelphia Energy Solutions

Process Flow Sketch
864 UNIFINER UNIT
864 UNIFINER RECONFIGURATION
(TIER 3 GASOLINE)

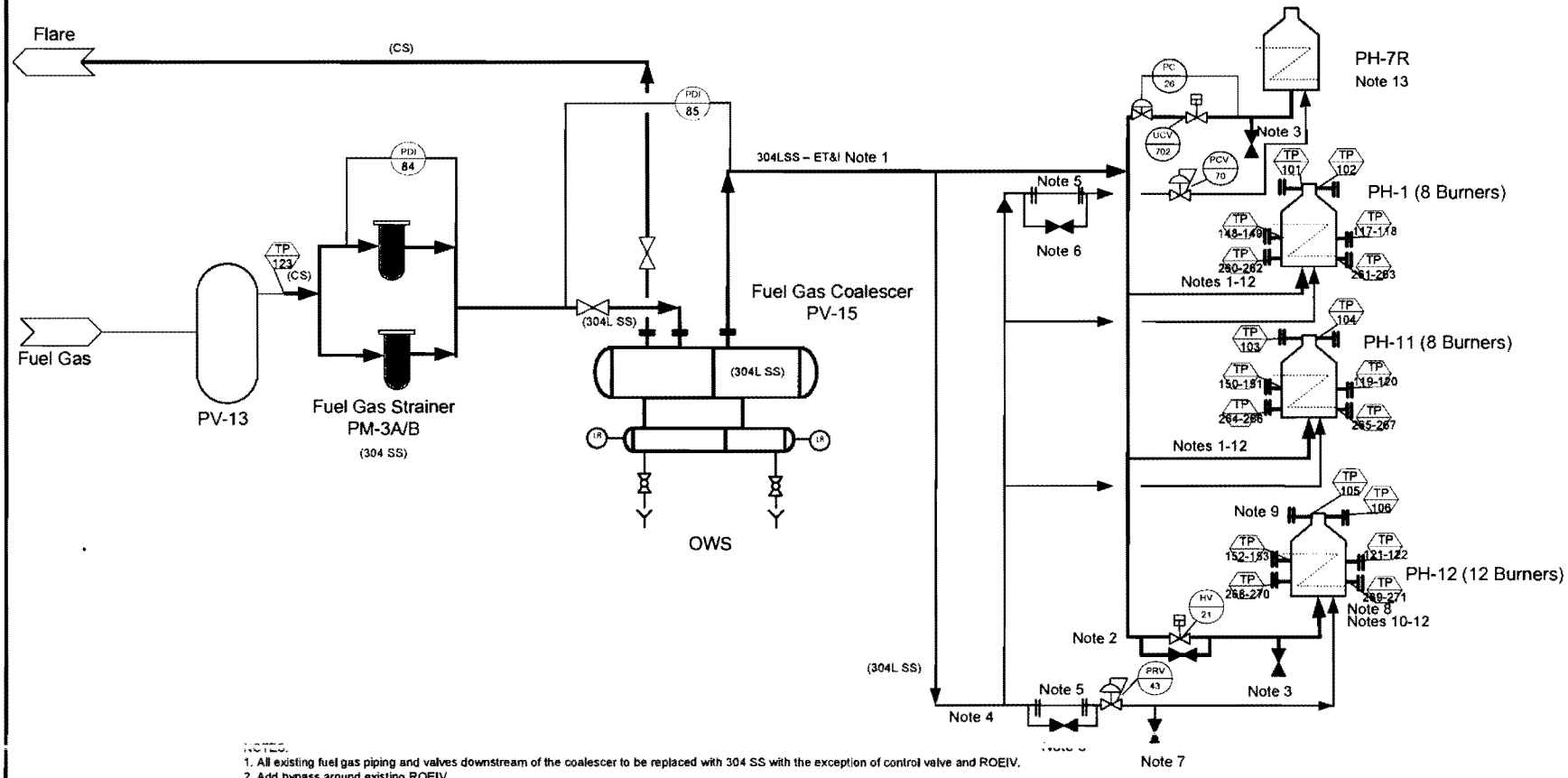

NOTES:

1. All existing fuel gas piping and valves downstream of the coalescer to be replaced with 304 SS with the exception of control valve and ROEIV.
2. Add bypass around existing ROEIV.
3. Add three 1" connections downstream of each fuel gas control valve for future pressure transmitters.
4. New pilot piping to be all 304L SS including valves with the exception of existing pilot gas pressure regulators.
5. Add a removable spool upstream of the pilot gas pressure regulator for an ROEIV at a later date.
6. Add a bypass around the removable spool in Note 5.
7. Add a 1" connection downstream of the pilot gas pressure regulator.
8. Add two sets of new 3" 150# flange at the top of each radiant section (two per set) for future Oxygen and combustibles analyzer.
9. Install two 3" flanges, 90° apart, on each stack above the damper for stack testing.
10. Replace gaskets on heater doors as needed.
11. Replace heater tube seats as needed.
12. New heater sight ports to be installed at all existing sight doors (4 doors)
13. Fired heater formerly 511H-1 from EP replaces PH-7

Modified Equipment
Replaced Equipment
New Equipment
Std. Flow, MBPD , MSCFH
Temperature, F
Pressure, PSIG

REV	DATE	REVISION	BY	CHK'D	APR'D	JOB NO.	DWG. NO.	SHEET	REV
A	8/11/2015	FOR INFORMATION ONLY	PT	DG	DG	64OZ5148	64OZ5148-1110-SK-0001	5 of 6	A

Philadelphia Energy Solutions

Process Flow Sketch
864 UNIFINER UNIT
864 UNIFINER RECONFIGURATION (TIER 3)
Fired Heaters, FG Coalescer and NG Pilots

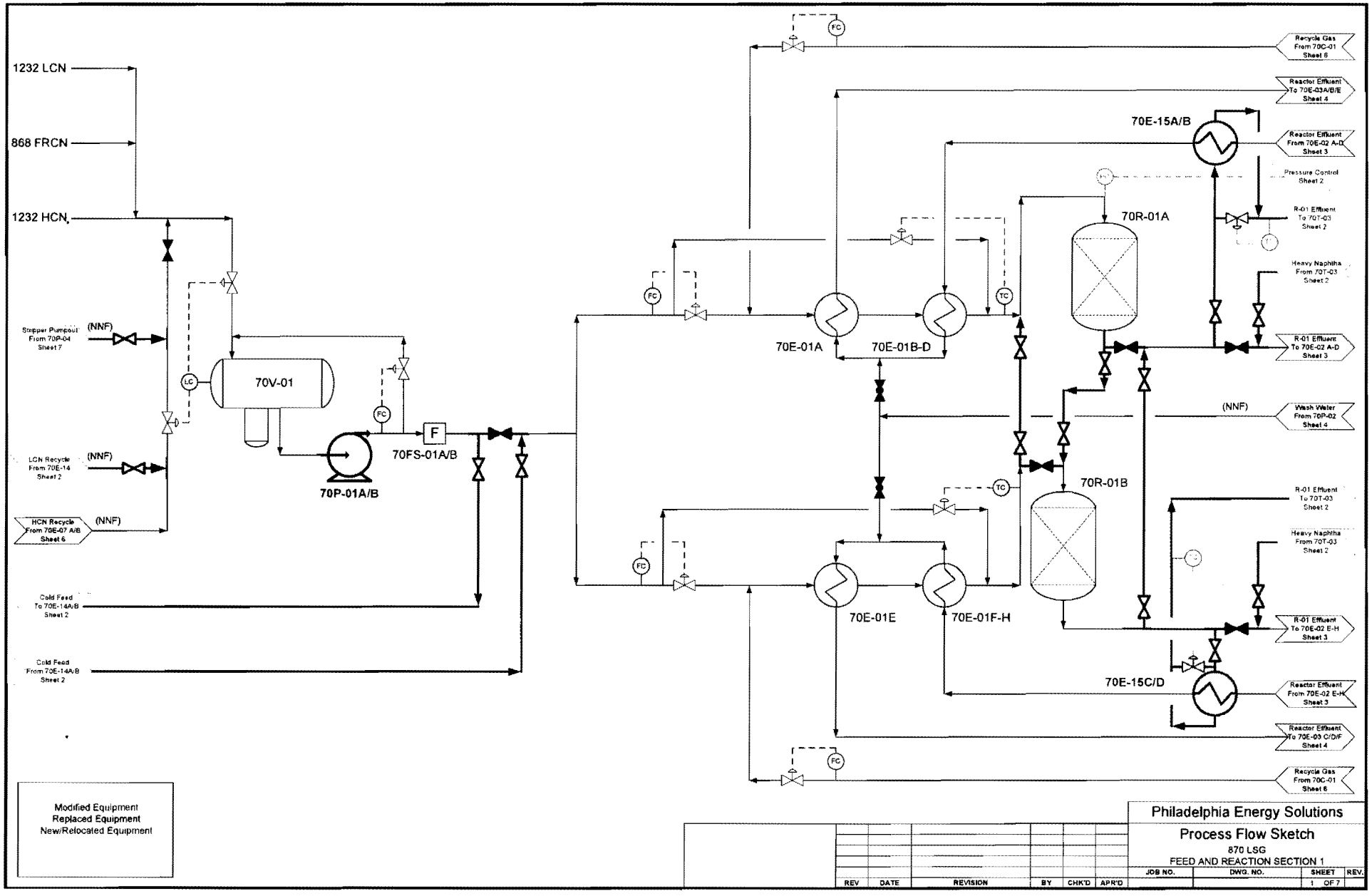
1232 LCN
868 FRCN
1232 HCN
Stripper Pumpout From 70P-04 Sheet 7
(NNF)
LCN Recycle From 70E-14 Sheet 2
(NNF)
HCN Recycle From 70E-07 A/B Sheet 6
(NNF)
Cold Feed To 70E-14A/B Sheet 2
Cold Feed From 70E-14A/B Sheet 2
LC
70V-01
FC
70P-01A/B
F
70FS-01A/B
FC
FC
FC
FC
TC
TC
70E-01A
70E-01B-D
70E-01E
70E-01F-H
70R-01A
70R-01B
70E-15A/B
70E-15C/D
Recycle Gas From 70C-01 Sheet 6
Reactor Effluent To 70E-03A/B/E Sheet 4
Reactor Effluent From 70E-02 A-D Sheet 3
Pressure Control Sheet 2
R-01 Effluent To 70T-03 Sheet 2
Heavy Naphtha From 70T-03 Sheet 2
R-01 Effluent To 70E-02 A-D Sheet 3
(NNF)
Wash Water From 70P-02 Sheet 4
R-01 Effluent To 70T-03 Sheet 2
Heavy Naphtha From 70T-03 Sheet 2
R-01 Effluent To 70E-02 E-H Sheet 3
Reactor Effluent From 70E-02 E-H Sheet 3
Reactor Effluent To 70E-03 C/D/F Sheet 4
Recycle Gas From 70C-01 Sheet 6
Modified Equipment
Replaced Equipment
New/Relocated Equipment
REV
DATE
REVISION
BY
CHK'D
APR'D
Philadelphia Energy Solutions
Process Flow Sketch
870 LSG
FEED AND REACTION SECTION 1
JOB NO.
DWG. NO.
SHEET
REV.
1 OF 7

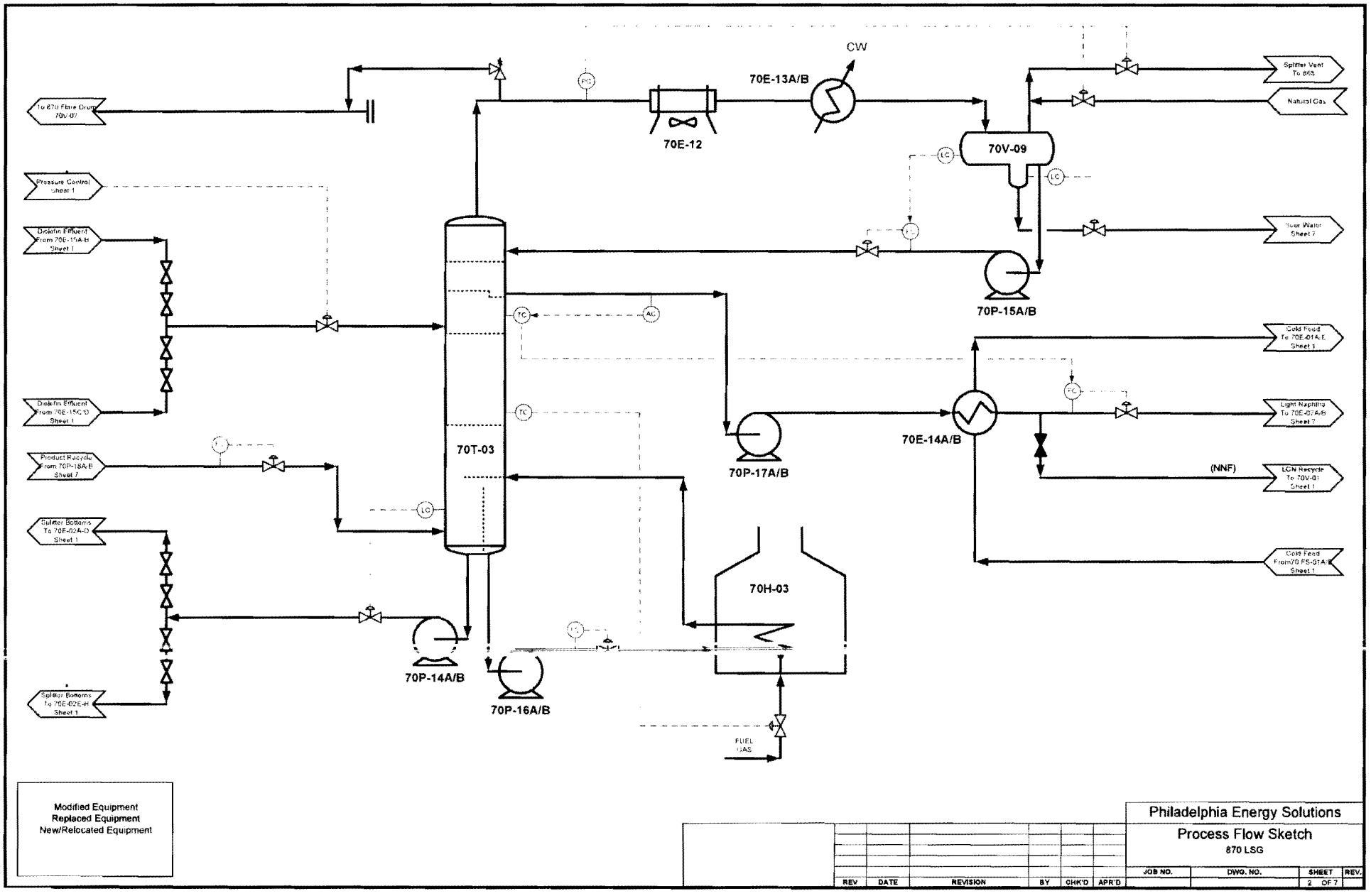
To 870 Flare Drum 70V-07
Pressure Control Sheet 1
Diolefin Effluent From 70E-15A/B Sheet 1
Diolefin Effluent From 70E-15C/D Sheet 1
Product Recycle From 70P-18A/B Sheet 7
Splitter Bottoms To 70E-02A-D Sheet 1
Splitter Bottoms To 70E-02E-H Sheet 1
70T-03
70P-14A/B
70P-16A/B
70E-12
70E-13A/B
CW
70V-09
70P-15A/B
70P-17A/B
70E-14A/B
70H-03
FUEL GAS
Splitter Vent To 865
Natural Gas
Sour Water Sheet 7
Cold Feed To 70E-01A,E Sheet 1
Light Naphtha To 70E-07A/B Sheet 7
(NNF)
LCN Recycle To 70V-01 Sheet 1
Cold Feed From 70 FS-01A/B Sheet 1
Modified Equipment
Replaced Equipment
New/Relocated Equipment
Philadelphia Energy Solutions
Process Flow Sketch
870 LSG
REV
DATE
REVISION
BY
CHK'D
APR'D
JOB NO.
DWG. NO.
SHEET
REV.
2 OF 7

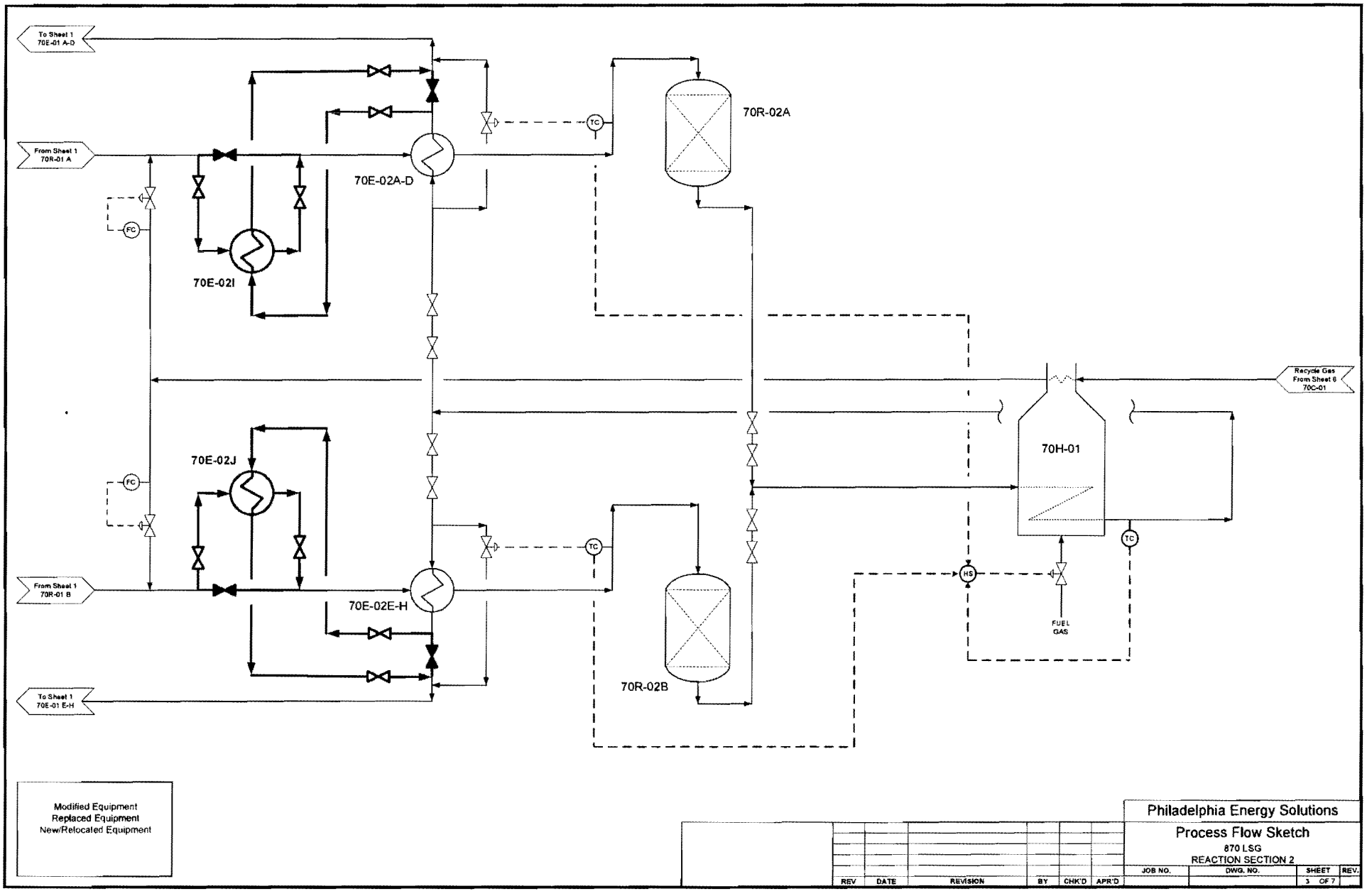
To Sheet 1
70E-01 A-D
From Sheet 1
70R-01 A
70E-02A-D
70E-02I
FC
TC
70R-02A
Recycle Gas
From Sheet 6
70C-01
70H-01
70E-02J
FC
TC
From Sheet 1
70R-01 B
70E-02E-H
HS
FUEL
GAS
TC
70R-02B
To Sheet 1
70E-01 E-H
Modified Equipment
Replaced Equipment
New/Relocated Equipment
Philadelphia Energy Solutions
Process Flow Sketch
870 LSG
REACTION SECTION 2
REV
DATE
REVISION
BY
CHK'D
APR'D
JOB NO.
DWG. NO.
SHEET
3 OF 7
REV.

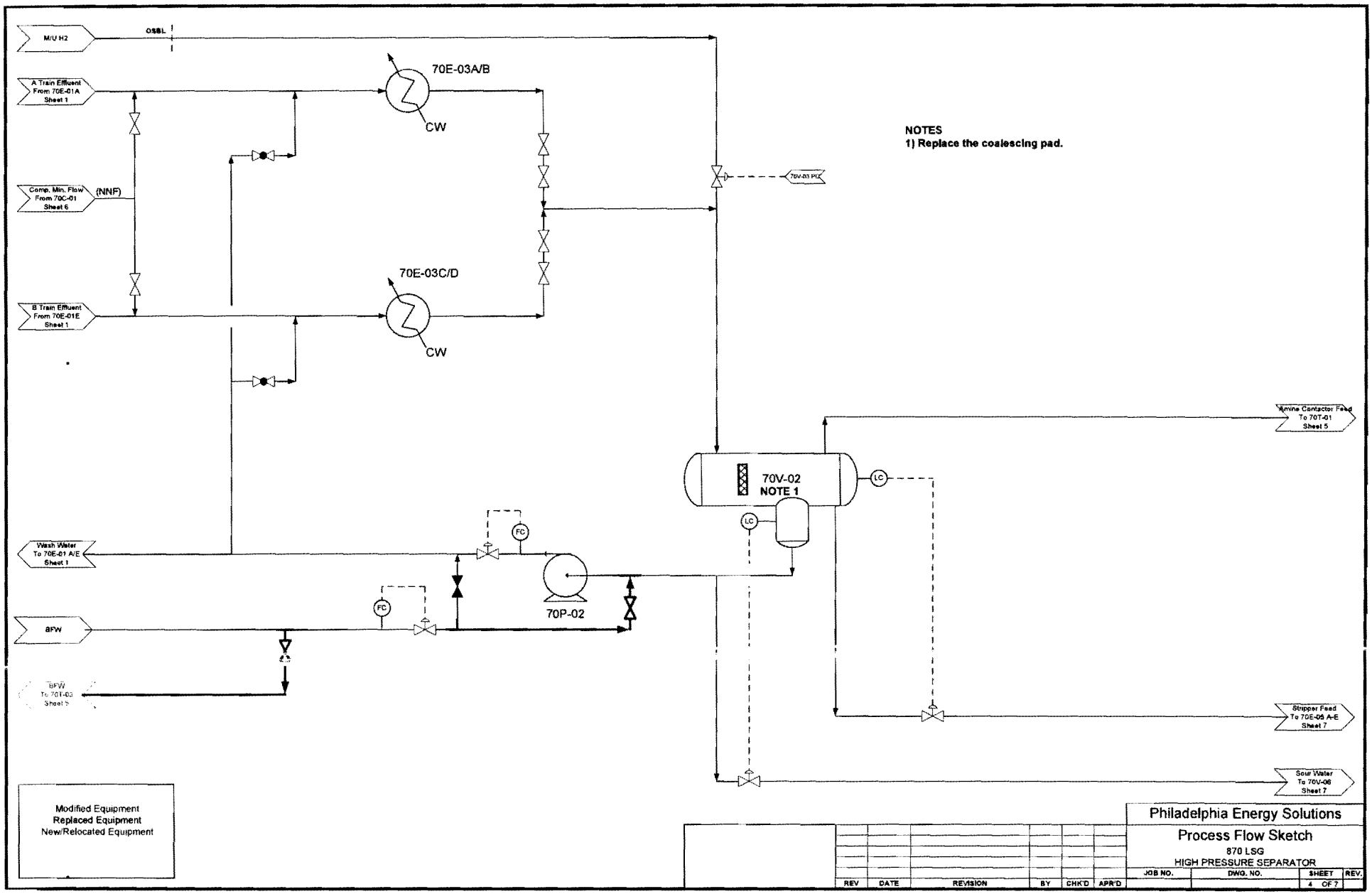
M/U H2
OSBL
A Train Effluent From 70E-01A Sheet 1
70E-03A/B
CW
Comp. Min. Flow From 70C-01 Sheet 6
(NNF)
70E-03C/D
B Train Effluent From 70E-01E Sheet 1
CW
70V-03 PEC
NOTES
1) Replace the coalescing pad.
Amine Contactor Feed To 70T-01 Sheet 5
70V-02
NOTE 1
LC
LC
FC
FC
Wash Water To 70E-01 A/E Sheet 1
70P-02
BFW
BFW To 70T-03 Sheet 5
Stripper Feed To 70E-05 A-E Sheet 7
Sour Water To 70V-06 Sheet 7
Modified Equipment
Replaced Equipment
New/Relocated Equipment
Philadelphia Energy Solutions
Process Flow Sketch
870 LSG
HIGH PRESSURE SEPARATOR
REV
DATE
REVISION
BY
CHK'D
APR'D
JOB NO.
DWG. NO.
SHEET
4 OF 7
REV.

NOTES

1) Repurpose the top three trays (trays 18-20) of the Amine Absorber as a water wash section.
2) Remove tray 18 and install a new chimney tray to act as a collection tray for the new wash water section of the column.
3) Cut four (4) new nozzles.
   - One new 6" water wash draw off nozzle.
   - Two new 2" level instrument nozzles for the collection tray (tray 18).
   - One new 4" lean amine inlet nozzle.
4) Install two (2) new distributors, one for the water wash inlet and one for the lean amine inlet.
5) Relocate the Eagle Point water wash pump to be used as the amine wash water circulation pumps.
6) **Replace existing demister pad with new demister pad.**

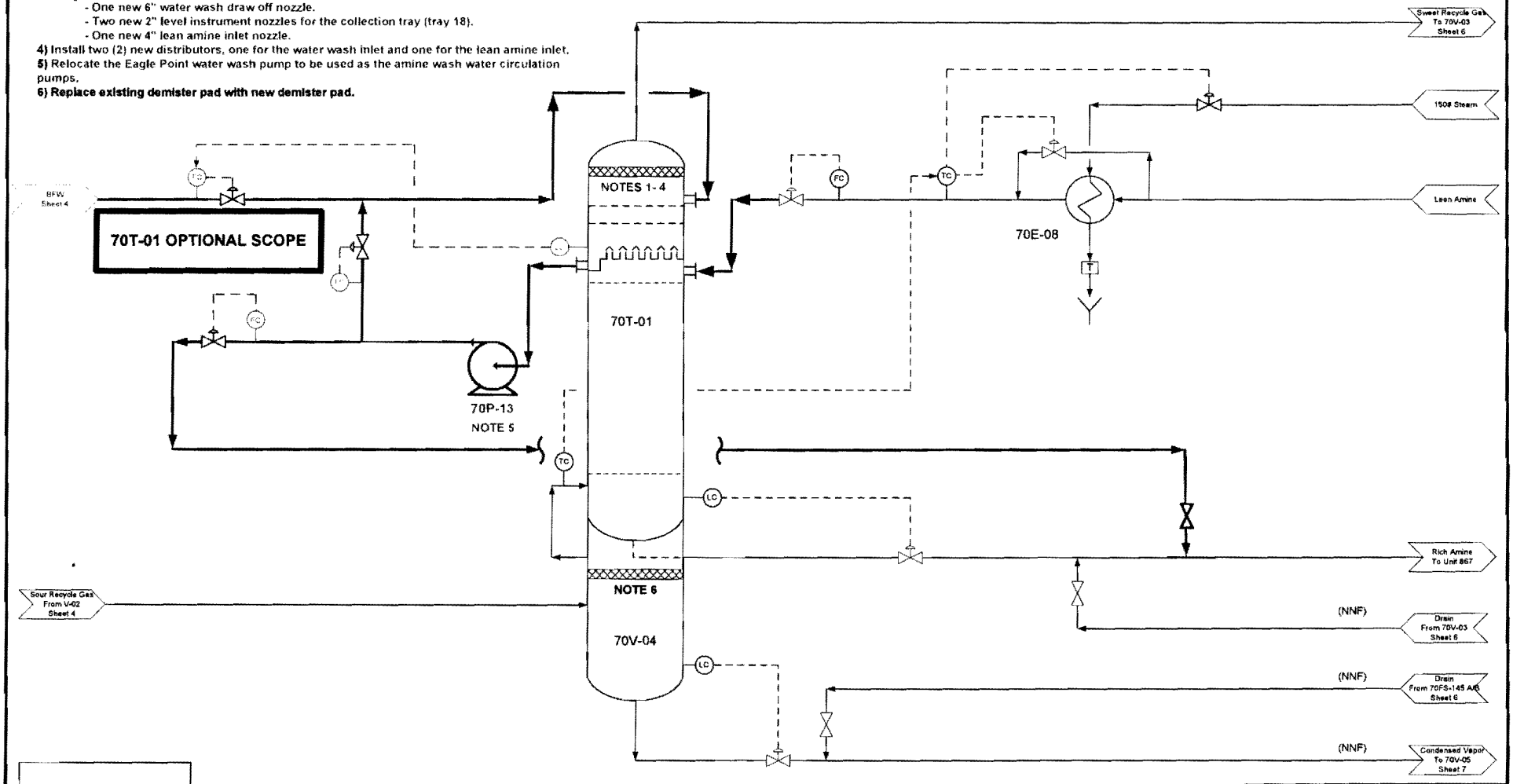

Modified Equipment
Replaced Equipment
New/Relocated Equipment

REV	DATE	REVISION	BY	CHK'D	APR'D

Philadelphia Energy Solutions

Process Flow Sketch

870 LSG
AMINE TREATING

JOB NO.	DWG. NO.	SHEET	REV.
		5 OF 7	

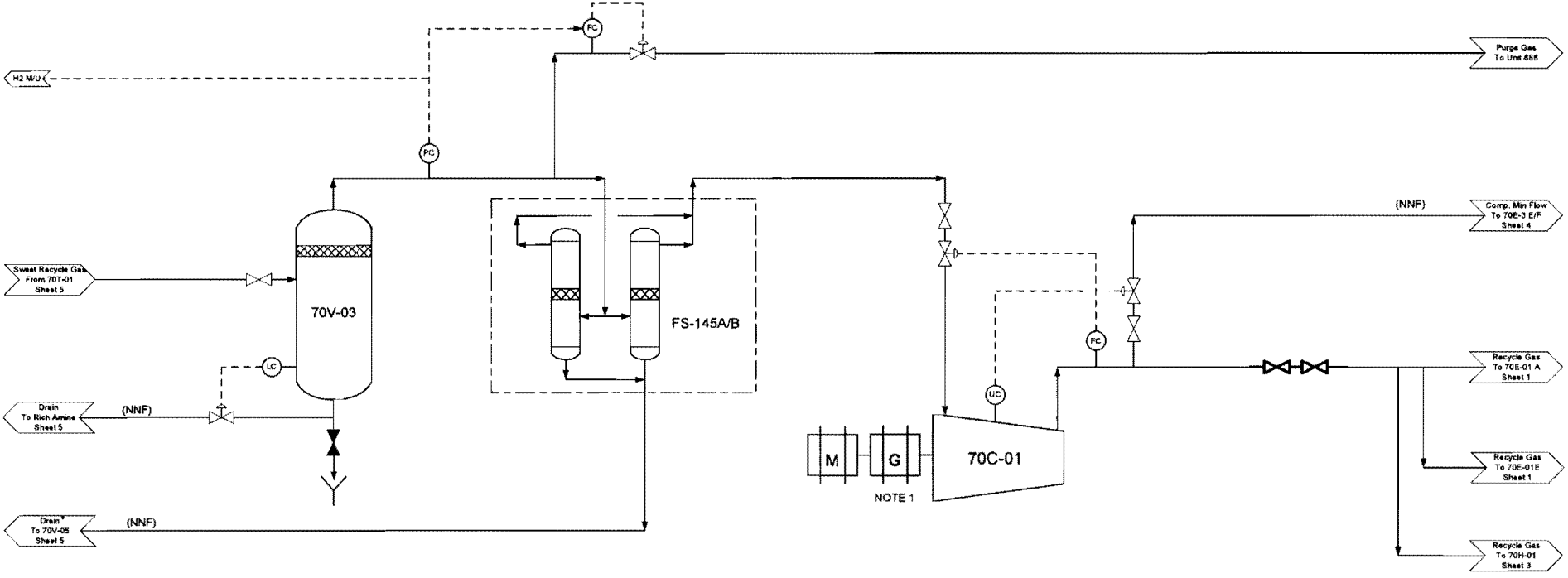

NOTES

1) Modify the existing 70C-01 gear set to reduce compressor speed.

Modified Equipment
Replaced Equipment
New/Relocated Equipment

REV	DATE	REVISION	BY	CHK'D	APR'D

Philadelphia Energy Solutions

Process Flow Sketch

870 LSG

RECYCLE GAS COMPRESSOR

JOB NO.	DWG. NO.	SHEET	REV.
		6 OF 7	

NOTES

1) Relocate two Eagle Point stripper feed/bottom exchangers to add to the existing 70E-05 exchangers, from 1x3 to a 1x5 configuration.
2) Install new pumps, 70P-18A/B, to recycle product as a SCANfining reactor diluent.
3) Replace existing burners.

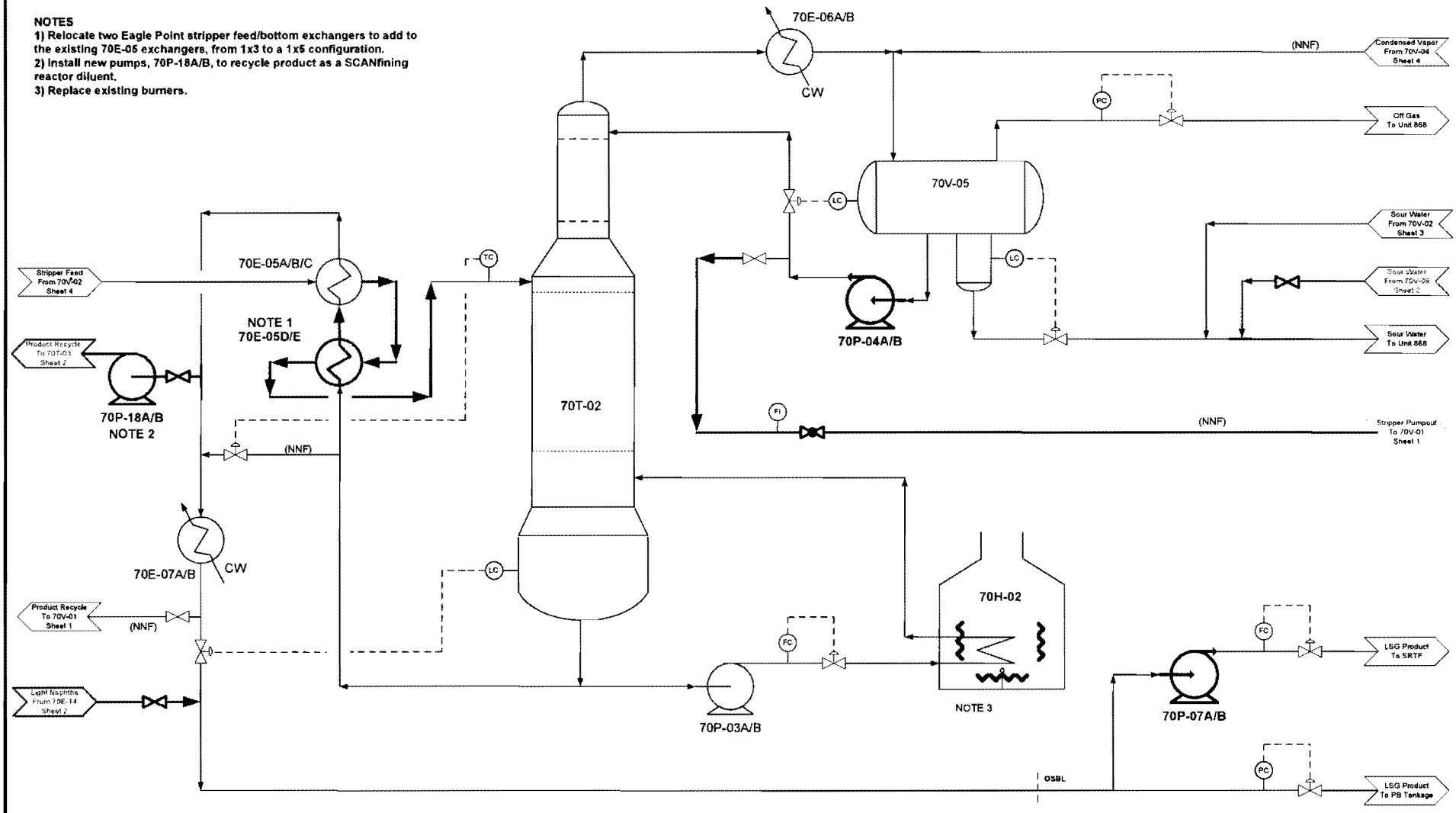

*
Modified Equipment
Replaced Equipment
New/Relocated Equipment

REV	DATE	REVISION	BY	CHK'D	APR'D

Philadelphia Energy Solutions

Process Flow Sketch

870 LSG
PRODUCT STRIPPER

JOB NO.	DWG. NO.	SHEET	REV.
		7 OF 7	

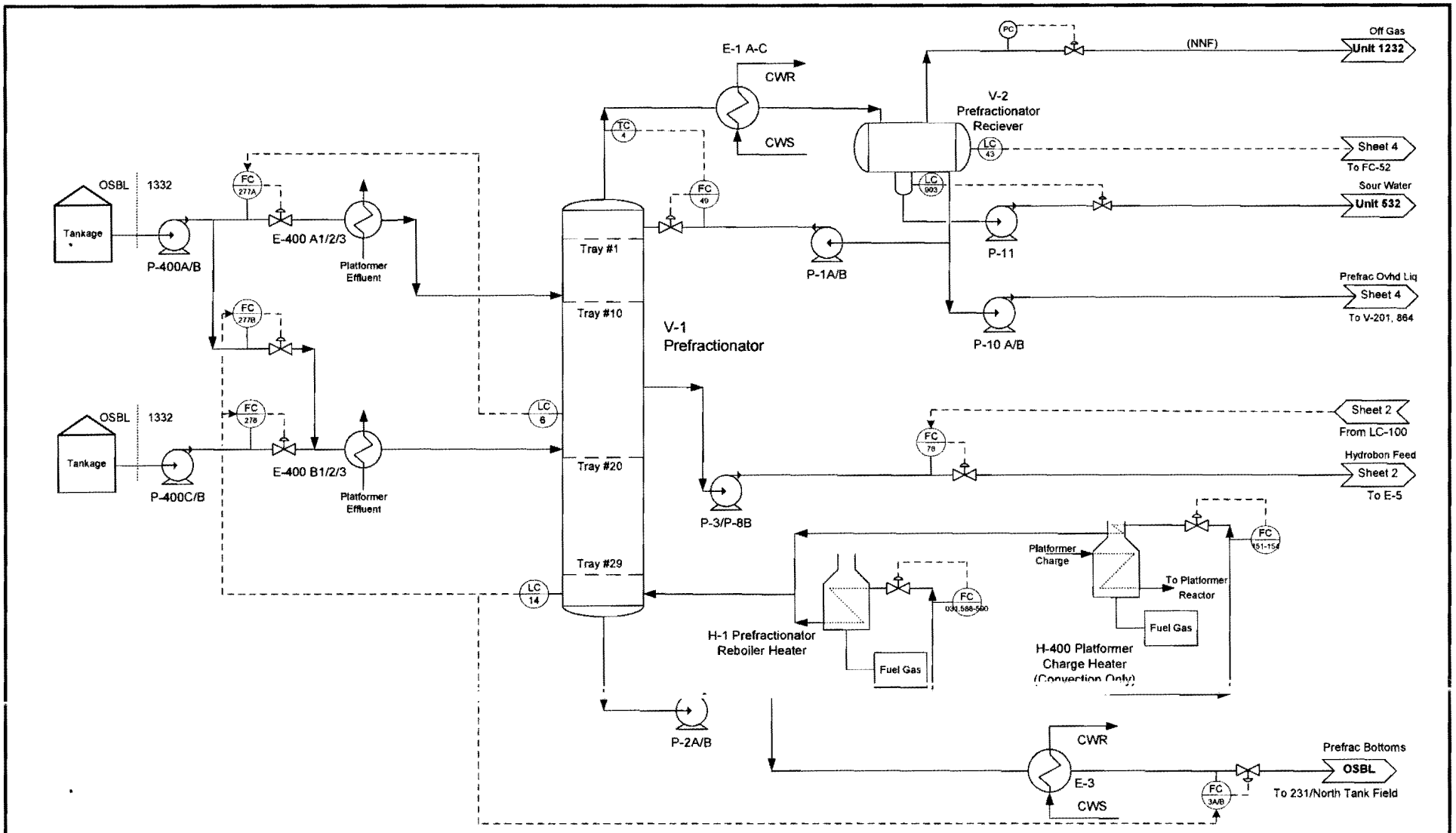

Modified Equipment
Replaced Equipment
New Equipment

REV	DATE	REVISION	BY	CHK'D	APR'D	JOB NO.	DWG. NO.	SHEET	REV.
A	8/11/15	FOR INFORMATION ONLY	PT	DG	DG	64OZ5149	64OZ5149-1110-SK-0001	1 of 4	A

Philadelphia Energy Solutions

Process Flow Sketch

Tier 3 Gasoline Compliance
Modifications to 1332 Hydrobon Unit at Girard Point

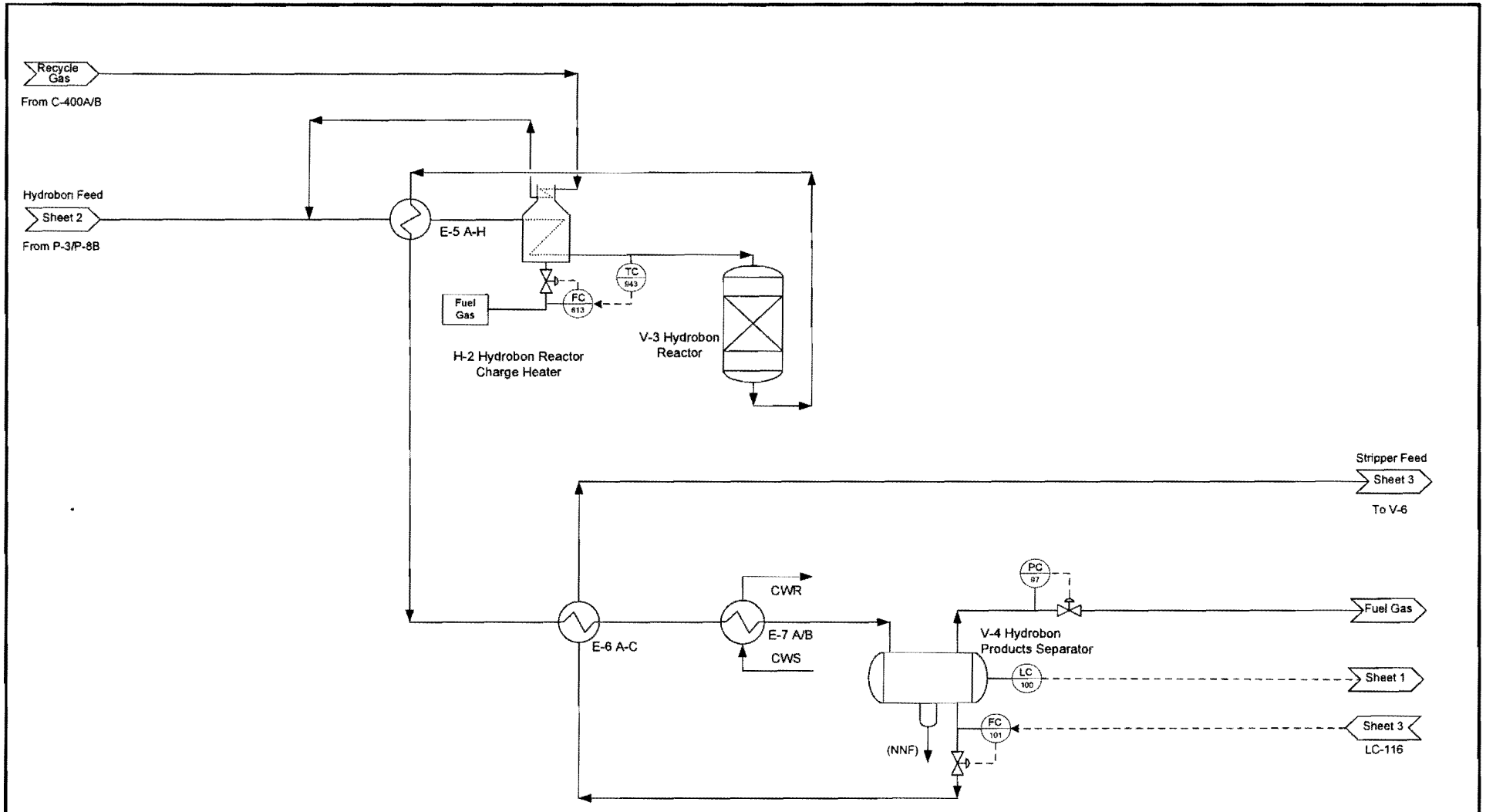

Modified Equipment
Replaced Equipment
New Equipment

REV	DATE	REVISION	BY	CHK'D	APR'D
A	8/11/15	FOR INFORMATION ONLY	PT	DG	DG

Philadelphia Energy Solutions

Process Flow Sketch

Tier 3 Gasoline Compliance
Modifications to 1332 Hydrobon Unit at Girard Point

JOB NO.	DWG. NO.	SHEET	REV.
64OZ5149	64OZ5149-1110-SK-0001	2 of 4	A

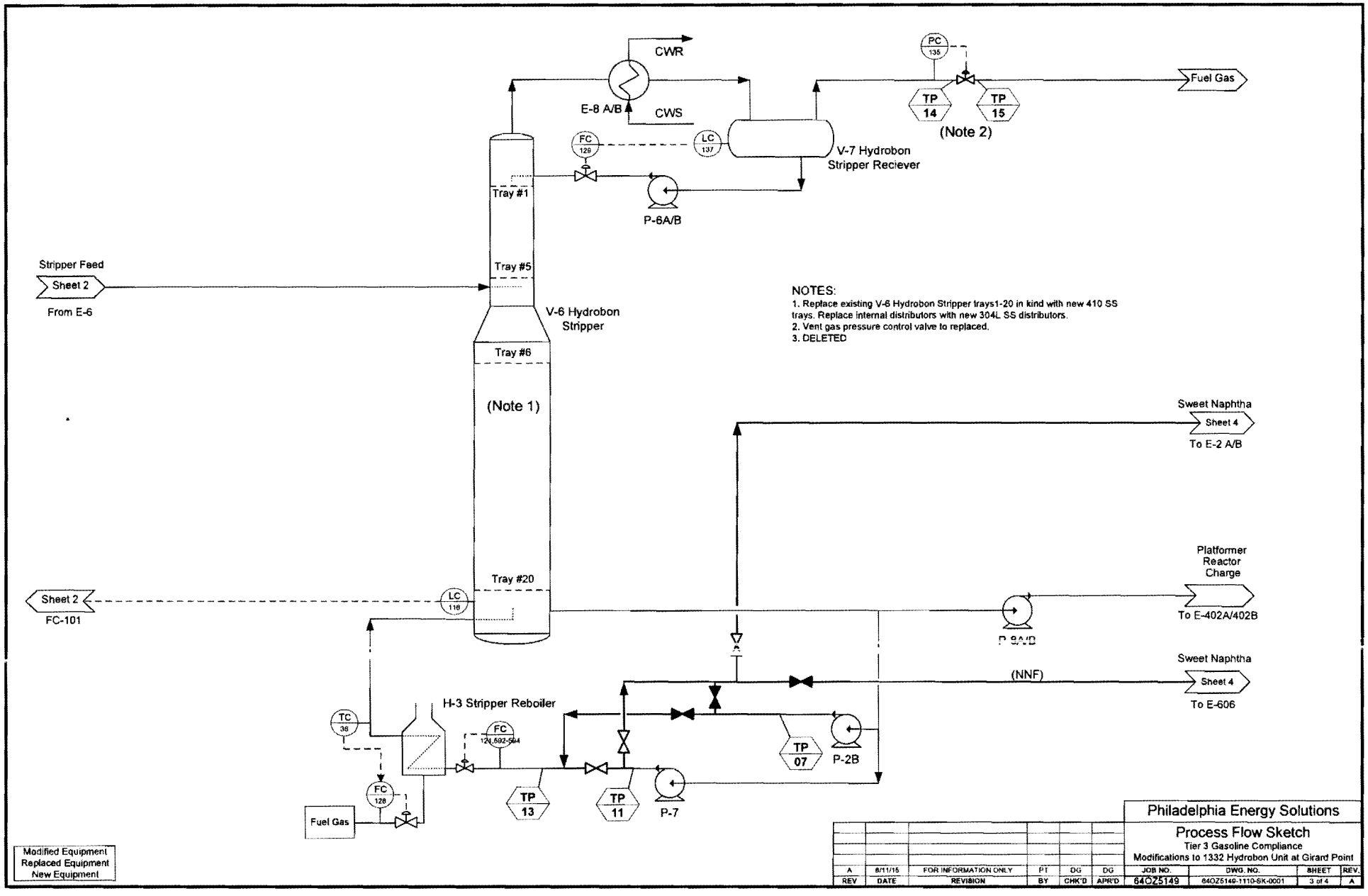
CWR
CWS
E-8 A/B
PC 135
TP 14
TP 15
(Note 2)
Fuel Gas
FC 128
LC 137
V-7 Hydrobon Stripper Reciever
P-6A/B
Tray #1
Tray #5
Stripper Feed
Sheet 2
From E-6
V-6 Hydrobon Stripper
Tray #6
(Note 1)
Tray #20
Sheet 2
FC-101
LC 118
NOTES:
1. Replace existing V-6 Hydrobon Stripper trays1-20 in kind with new 410 SS trays. Replace internal distributors with new 304L SS distributors.
2. Vent gas pressure control valve to replaced.
3. DELETED
Sweet Naphtha
Sheet 4
To E-2 A/B
Platformer Reactor Charge
To E-402A/402B
P-9A/B
(NNF)
Sweet Naphtha
Sheet 4
To E-606
H-3 Stripper Reboiler
TC 36
FC 121,592-594
FC 128
Fuel Gas
TP 13
TP 11
P-7
TP 07
P-2B
Modified Equipment
Replaced Equipment
New Equipment
Philadelphia Energy Solutions
Process Flow Sketch
Tier 3 Gasoline Compliance
Modifications to 1332 Hydrobon Unit at Girard Point
A | 8/11/15 | FOR INFORMATION ONLY | PT | DG | DG
REV | DATE | REVISION | BY | CHK'D | APR'D
JOB NO. 64OZ5149
DWG. NO. 64OZ5149-1110-SK-0001
SHEET 3 of 4
REV. A

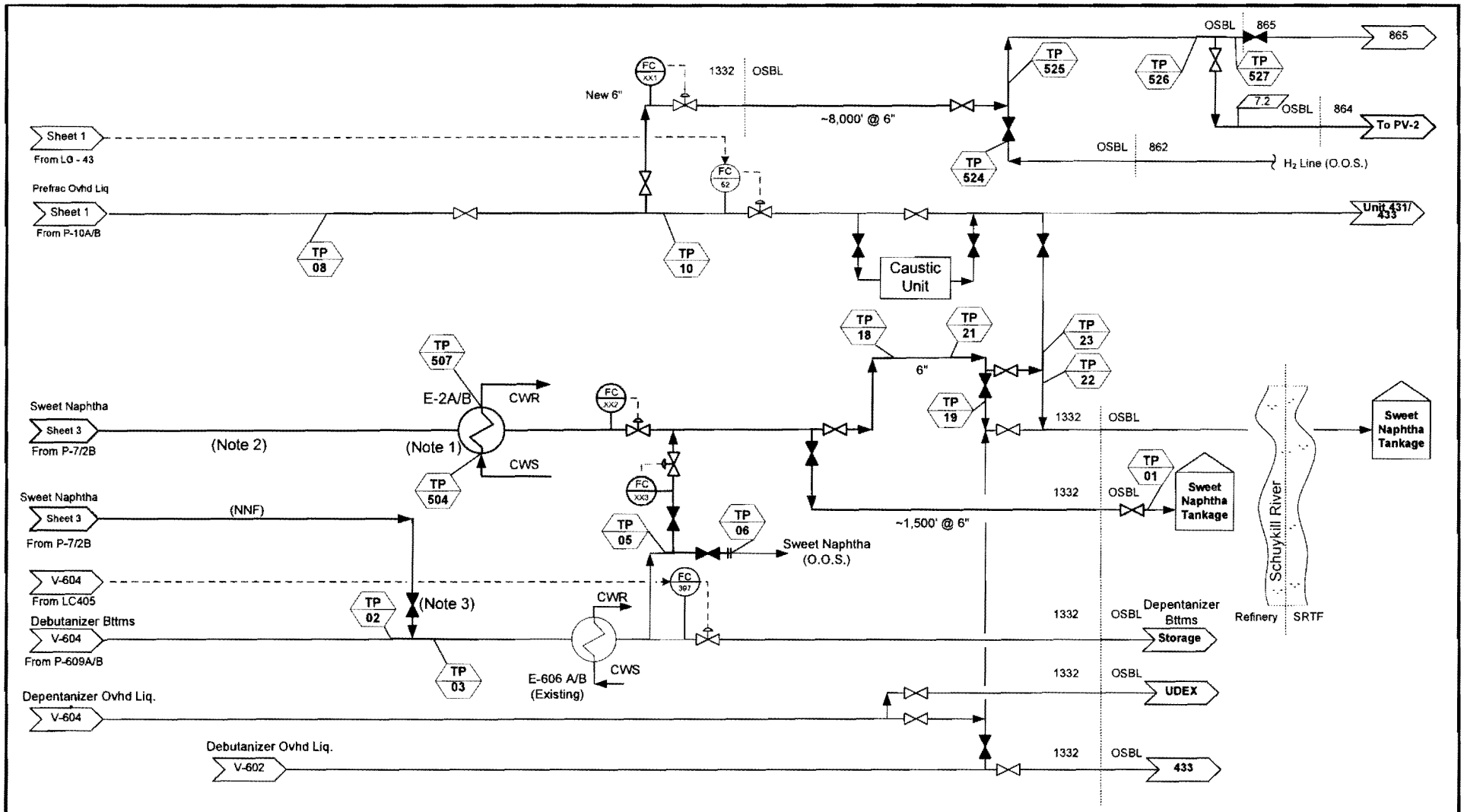

NOTES:
1. Existing E-2 (OOS) cooler to be replaced with a new exchangers.
2. Normal Case Sweet Naphtha flow to E-2 A/B.
3. When Platformer is down Sweet Naphtha flows to E-606 A/B.

Modified Equipment
Replaced Equipment
New Equipment

REV	DATE	REVISION	BY	CHK'D	APR'D	JOB NO.	DWG. NO.	SHEET	REV.
A	6/11/15	FOR INFORMATION ONLY	PT	DG	DG	64OZ5149	64OZ5149-1110-SK-0001	4 of 4	A

Philadelphia Energy Solutions

Process Flow Sketch

Tier 3 Gasoline Compliance
Modifications to 1332 Hydrobon Unit at Girard Point

Attachment C
Back-up Emissions Calculations

PES Refinery
Tier 3 Project Emissions
September 2015

Emissions Summary

Source	NO_2	NO_x	SO_2	CO	PM	PM_{10}	$PM_{2.5}$	VOC	Lead	CO_2e
Fired Heaters	34.6	11.2	4.4	66.4	11.9	11.9	6.7	6.5	8.3E-04	200,084
864 PH-1	- - -	*-2.6*	*0.5*	*15.9*	*1.4*	*1.4*	*1.4*	*1.0*	*9.4E-05*	*22,758*
864 PH-7	- - -	*-10.2*	- - -	- - -	- - -	- - -	- - -	*-0.7*	- - -	- - -
864 PH-7R	***6.5***	***6.5***	***0.9***	***9.7***	***2.3***	***2.3***	***0.7***	***1.6***	***1.5E-04***	***35,902***
864 PH-11	- - -	*-6.2*	*0.4*	*12.0*	*1.1*	*1.1*	*1.1*	*0.8*	*7.1E-05*	*17,213*
864 PH-12	- - -	*-4.4*	*0.4*	*12.1*	*1.1*	*1.1*	*1.1*	*0.8*	*7.2E-05*	*17,341*
870 H-1	*7.8*	*7.8*	*0.6*	*0.4*	*1.7*	*1.7*	*0.6*	*0.1*	*1.3E-04*	*31,413*
870 H-2	*2.6*	*2.6*	*0.3*	*0.0*	*0.2*	*0.2*	*0.2*	*0.1*	*4.5E-05*	*10,943*
870 H-3	***14.5***	***14.5***	***1.1***	***14.5***	***3.6***	***3.6***	***1.1***	***2.4***	***2.3E-04***	***56,417***
1332 H-2	*1.6*	*1.6*	*0.2*	*0.5*	*0.4*	*0.4*	*0.4*	*0.3*	*2.4E-05*	*6,079*
1332 H-3	*1.6*	*1.6*	*0.1*	*1.4*	*0.1*	*0.1*	*0.1*	*0.1*	*8.1E-06*	*2,018*
Incremental Cooling Water	-	-	-	-	0.2	0.1	0.001	0.1	-	-
Incremental Sulfur Production	0.08	0.08	0.2	3.3	-	-	-	-	-	-
Fugitive Components	-	-	-	-	-	-	-	0.01	-	-
Total Emissions (TPY)	**34.6**	**11.2**	**4.7**	**69.7**	**12.0**	**12.0**	**6.7**	**6.7**	**8.3E-04**	**200,084**

PES Refinery
Tier 3 Project Emissions
September 2015

PSD and NANSR Analysis

Parameter	Total Emissions (TPY)										
	NO_2	NO_x	SO_2	CO	PM	PM_{10}	$PM_{2.5}$	H_2SO_4	Lead	VOC	CO_2e
PES Tier 3 Project	34.6	11.2	4.7	69.7	12.0	12.0	6.7	0	8.3E-04	6.7	200,084

PSD Emissions Analysis (Step 1)									
Parameter	Pollutant (TPY)								
	NO_2	SO_2	CO	PM	PM_{10}	$PM_{2.5}$	H_2SO_4	Lead	CO_2e
PES Tier 3 Project	34.6	4.7	69.7	12.0	12.0	6.7	0	8.3E-04	200,084
PSD Significant Level	40	40	100	25	15	10	7	0.6	75,000
PSD Triggered (Before Netting Analysis)	No	No	No	No	No	No	No	No	No

Parameter	5 calendar year NO_x (TPY)	5 calendar year VOC (TPY)
PES Tier 3 Project	11.2	6.7
Contemporaneous Increases	12.8	13.2
Net Emissions Increase	**24.1**	**19.8**
NANSR Significance Level	25	25
NANSR Review Required	**No**	**No**

Parameter	10 year NO_x (TPY)	10 year VOC (TPY)
PES Tier 3 Project	11.2	6.7
Contemporaneous Increases/Decreases	23.4	28.4
Net Emissions Increase	**34.6**	**35.0**
NANSR Significance Level	25	25
NANSR Review Required	**Yes**	**Yes**

PES Refinery
Tier 3 Project Emissions
September 2015

Fired Heater Emissions

Fired Heaters				
Unit	Heater	Calculated Firing rate MMBtu/hr	Title V Limits (MMBtu/hr)	Potential Firing Limits (MMBtu/hr)
864	PH-1	47.8	80	74.9
864	PH-7R (former Eagle Point)	56.3	N/A	70
864	PH-11	58.9	74	74
864	PH-12	63.0	85.1	85.1
870	H-1	91.2	97	97
870	H-2	49.9	53	53
870	H-3	103.7	N/A	110
1332	H-2	43.8	60	60
1332	H-3	28.1	43	43

Month	864 (MMBtu/month)				870 (MMBtu/month)			1332 (MMBtu/ month)	
	PH-1	PH-7R	PH-11	PH-12	H-1	H-2	H-3	H-2	H-3
Jan-12	20,926	---	26,380	31,175	28,383	25,530	---	26,602	17,568
Feb-12	18,141	---	24,371	27,202	26,290	24,007	---	22,310	16,265
Mar-12	21,611	---	26,700	28,476	25,106	24,357	---	26,004	17,277
Apr-12	19,951	---	25,581	27,441	28,209	24,252	---	27,503	18,713
May-12	19,318	---	24,841	26,553	28,312	23,691	---	25,671	17,604
Jun-12	21,142	---	27,619	28,387	32,448	26,447	---	24,763	17,521
Jul-12	19,163	---	23,954	29,359	23,826	19,764	---	24,618	17,370
Aug-12	18,625	---	25,904	28,076	35,139	28,531	---	21,647	17,323
Sep-12	19,696	---	27,480	34,568	24,574	21,749	---	27,716	18,404
Oct-12	21,115	---	28,627	38,607	29,090	22,822	---	27,070	18,278
Nov-12	22,585	---	30,343	41,092	35,113	24,421	---	26,126	17,370
Dec-12	20,825	---	28,281	40,118	36,165	27,110	---	25,102	17,861
Jan-13	21,607	---	30,179	41,571	36,753	26,428	---	13,064	9,771
Feb-13	20,012	---	28,760	37,840	16,174	10,775	---	0	0
Mar-13	22,542	---	32,702	40,941	18,803	20,568	---	15,221	12,003
Apr-13	22,672	---	31,092	38,163	21,564	26,302	---	28,797	20,659
May-13	23,866	---	33,797	38,354	28,667	26,457	---	26,574	19,694
Jun-13	21,004	---	28,705	36,446	23,811	26,313	---	25,199	18,715
Jul-13	24,145	---	31,918	39,475	18,485	19,887	---	26,119	18,432
Aug-13	24,032	---	31,905	39,726	26,289	29,603	---	26,063	19,753
Sep-13	20,836	---	30,118	33,383	25,644	25,230	---	25,502	18,974
Oct-13	22,776	---	32,317	38,069	24,432	23,324	---	24,239	20,547
Nov-13	20,979	---	30,154	38,447	28,360	22,924	---	26,415	21,797
Dec-13	24,731	---	30,679	45,798	27,155	20,371	---	24,422	21,594
Jan-14	24,388	---	30,029	42,666	24,007	21,724	---	20,203	18,889
Feb-14	22,235	---	26,445	41,447	20,598	18,071	---	14,957	14,716
Mar-14	24,937	---	32,081	45,672	21,038	17,929	---	23,728	22,013
Apr-14	26,464	---	30,784	39,587	25,487	23,007	---	29,098	20,760
May-14	24,467	---	24,606	20,810	22,745	24,998	---	32,199	20,153
Jun-14	31,135	---	30,000	23,734	18,990	20,856	---	30,280	17,358
Jul-14	22,060	---	23,043	22,357	16,713	19,840	---	30,759	17,693
Aug-14	28,212	---	28,001	31,399	23,148	22,641	---	24,476	21,226
Sep-14	25,621	---	24,245	29,903	23,051	21,695	---	27,348	20,948
Oct-14	22,747	---	23,663	29,814	22,571	23,954	---	34,777	19,239
Nov-14	3,206	---	1,229	3,326	25,318	22,676	---	32,129	19,631
Dec-14	18,832	---	22,640	25,929	29,399	23,450	---	30,427	19,785
Jan-15	26,295	---	31,060	31,778	28,834	25,127	---	26,158	19,293
Feb-15	23,266	---	27,505	30,556	17,699	15,799	---	13,223	9,393
Mar-15	31,707	---	34,715	36,555	23,933	19,042	---	12,771	11,432
Apr-15	26,508	---	28,757	33,010	27,043	20,962	---	23,237	21,531
May-15	27,455	---	29,409	29,071	27,775	22,671	---	22,594	20,669
Jun-15	27,758	---	30,163	28,348	25,331	23,940	---	25,310	19,080
June 12 - May 14 Average (MMBtu/hr)	30.5	0.0	40.4	51.3	35.8	31.7	0.0	31.9	24.1
2014 Average HHV (Btu/scf)	1,028	1,029	1,028	1,028	1,028	1,028	1,028	1,066	1,066

Baseline Emission Factor (lb/MMBtu)	864				870			1332	
	PH-1	PH-7R	PH-11	PH-12	H-1	H-2	H-3	H-2	H-3
NO_x	0.167	0.02	0.145	0.119	0.029	0.028	0.03	0.031	0.0938
SO_2	0.003	0.003	0.003	0.003	0.002	0.003	0.002	0.004	0.003
CO	0.082	0.032	0.082	0.082	0.0014	0	0.03	0.01	0.0788
PM	0.0074	0.0074	0.0074	0.0074	0.0063	0.0025	0.0074	0.0071	0.0071
PM_{10}	0.0074	0.0074	0.0074	0.0074	0.0063	0.0025	0.0074	0.0071	0.0071
$PM_{2.5}$	0.0074	0.0023	0.0074	0.0074	0.0023	0.0023	0.0023	0.0071	0.0071
VOC	0.0053	0.0053	0.0053	0.0053	0.0004	0.0009	0.0050	0.0052	0.0052
Lead	4.9E-07	4.9E-07	4.9E-07	4.9E-07	4.9E-07	4.9E-07	4.9E-07	4.7E-07	4.7E-07
CO_2e	117.1	117.1	117.1	117.1	117.1	117.1	117.1	117.1	117.1

PES Refinery
Tier 3 Project Emissions
September 2015

Fired Heater Emissions

Emissions Increases (lb/hr)	864				87[illegible]			1332	
	PH-1	PH-7R	PH-11	PH-12	H-1	H-[illegible]	H-3	H-2	H-3
NO_x	2.89	1.48	2.68	1.39	1.61	0.[illegible]	3.30	0.37	0.37
SO_2	0.05	0.20	0.05	0.03	0.13	0.[illegible]	0.25	0.04	0.01
CO	1.41	2.22	1.51	0.96	0.08	0.[illegible]	3.30	0.12	0.31
PM	0.13	0.52	0.14	0.09	0.35	0.[illegible]	0.81	0.08	0.03
PM_{10}	0.13	0.52	0.14	0.09	0.35	0.[illegible]	0.81	0.08	0.03
$PM_{2.5}$	0.13	0.16	0.14	0.09	0.13	0.[illegible]	0.25	0.08	0.03
VOC	0.09	0.37	0.10	0.06	0.02	0.[illegible]	0.55	0.06	0.02
Lead	8.4E-06	3.4E-05	9.0E-06	5.7E-06	2.7E-05	8.91[illegible]6	5.3E-05	5.6E-06	1.8E-06
CO_2e	2,025	8,197	2,162	1,370	6,499	2,14[illegible]	12,881	1,388	461

Incremental Emissions Increases (TPY)	864				87[illegible]			1332	
	PH-1	PH-7R	PH-11	PH-12	H-1	H-[illegible]	H-3	H-2	H-3
NO_x	12.65	---	11.73	6.10	7.05	2.[illegible]	---	1.61	1.62
SO_2	0.21	---	0.23	0.14	0.56	0.[illegible]	---	0.19	0.05
CO	6.19	---	6.61	4.18	0.33	0.[illegible]	---	0.52	1.36
PM	0.56	---	0.60	0.38	1.52	0.[illegible]	---	0.37	0.12
PM_{10}	0.56	---	0.60	0.38	1.52	0.[illegible]	---	0.37	0.12
$PM_{2.5}$	0.56	---	0.60	0.38	0.55	0.[illegible]	---	0.37	0.12
VOC	0.41	---	0.43	0.27	0.10	0.0[illegible]	---	0.27	0.09
Lead	3.7E-05	---	3.9E-05	2.5E-05	1.2E-04	3.91[illegible]5	---	2.4E-05	8.1E-06
CO_2e	8,869	---	9,471	5,999	28,463	9,37[illegible]	---	6,079	2,018

Potential Emissions Increases (TPY)	864				87[illegible]			1332	
	PH-1	PH-7R	PH-11	PH-12	H-1	H-[illegible]	H-3	H-2	H-3
NO_x	32.46	6.48	21.32	17.62	7.78	2.[illegible]	14.45	3.82	7.76
SO_2	0.55	0.87	0.41	0.40	0.62	0.[illegible]	1.11	0.45	0.26
CO	15.87	9.72	12.01	12.10	0.37	0.[illegible]	14.45	1.23	6.52
PM	1.44	2.27	1.09	1.09	1.68	0.[illegible]4	3.56	0.88	0.59
PM_{10}	1.44	2.27	1.09	1.09	1.68	0.[illegible]4	3.56	0.88	0.59
$PM_{2.5}$	1.44	0.70	1.09	1.09	0.61	0.[illegible]	1.10	0.88	0.59
VOC	1.04	1.62	0.79	0.79	0.10	0.0[illegible]9	2.41	0.64	0.43
Lead	9.4E-05	1.5E-04	7.1E-05	7.2E-05	1.3E-04	4.5E-[illegible]5	2.3E-04	5.8E-05	3.9E-05
CO_2e	22,758	35,902	17,213	17,341	31,413	10,9[illegible]	56,417	14,413	9,683

Baseline Emissions			
Actual Emissions (TPY)	864	864	864
	PH-1	PH-11	PH-12
Average MMBtu/hr	30.5	40.4	51.3
NO_x	22.33	25.68	26.73
SO_2	0.38	0.49	0.61
CO	10.92	14.47	18.35
PM	0.99	1.31	1.66
PM_{10}	0.99	1.31	1.66
$PM_{2.5}$	0.99	1.31	1.66
VOC	0.72	0.95	1.20
Lead	6.5E-05	8.6E-05	1.1E-04
CO_2e	15,657	20,740	26,306

LNB Modified Heater			
Future Potential (TPY)	864	864	864
	PH-1	PH-11	PH-12
MMBtu/hr	74.9	74	85.1
NO_x	19.68	19.45	22.36
SO_2	0.92	0.91	1.01
CO	26.79	26.47	30.44
PM	2.42	2.40	2.75
PM_{10}	2.42	2.40	2.75
$PM_{2.5}$	2.42	2.40	2.75
VOC	1.75	1.73	1.99
Lead	1.6E-04	1.6E-04	1.8E-04
CO_2e	38,415	37,953	43,646
LNB NO_x Emission Rate (lb/MMBtu)	0.06	0.06	0.06

LNB Modified Heater			
Emissions Increases (TPY)	864	864	864
	PH-1	PH-11	PH-12
MMBtu/hr increase	44.4	33.6	33.8
NO_x	-2.65	-6.24	-4.37
SO_2	0.55	0.41	0.40
CO	15.87	12.01	12.10
PM	1.44	1.09	1.09
PM_{10}	1.44	1.09	1.09
$PM_{2.5}$	1.44	1.09	1.09
VOC	1.04	0.79	0.79
Lead	9.4E-05	7.1E-05	7.2E-05
CO_2e	22,758	17,213	17,341

PES Refinery
Tier 3 Project Emissions
September 2015

864 PH-7 Shutdown Summary

Pollutant	2012	2013	2014	2012/2013	2013/2014	June '12 - May '14
NO_x	5.47	12.72	9.86	9.09	11.29	10.15
SO_2	0.28	0.36	0.29	0.32	0.33	0.33
CO	9.16	10.77	8.06	9.97	9.42	9.93
PM	0.83	0.97	0.73	0.90	0.85	0.90
VOC	0.60	0.71	0.53	0.65	0.62	0.65
CO_2e	11,790	14,959	11,227	13,374	13,093	13,511
Lead	5.5E-05	6.4E-05	4.9E-05	5.9E-05	5.6E-05	5.9E-05

PES Refinery
Tier 3 Project Emissions
September 2015

Unit 864 PH-7R Heater (Replacement from Eagle Point Refinery)

Fired Duty (MMBtu/hr)	70.0		
Pollutant	lb/hr	TPY	lb/MMBtu
CO	2.22	9.7	0.032
NO_x	1.48	6.5	0.02
PM_{10}	0.52	2.3	0.0074
SO_2	0.20	0.9	0.003
VOC	0.37	1.6	0.0053
Lead	3.4E-05	1.5E-04	4.9E-07
CO_2e	8,197	35,902	117.1

PES Refinery
Tier 3 Project Emissions
September 2015

Unit 870 H-3 Heater (New Heater)

Fired Duty (MMBtu/hr)	110.0		
Pollutant	lb/hr	TPY	lb/MMBtu
CO	3.3	14.5	0.030
NO_x	3.3	14.5	0.03
PM_{10}	0.81	3.6	0.0074
SO_2	0.25	1.1	0.002
VOC	0.55	2.4	0.0050
Lead	5.3E-05	2.3E-04	4.9E-07
CO_2e	12,881	56,417	117.1

PES Refinery
Tier 3 Project Emissions
September 2015

Fired Heater SO_2 Emissions

Heater	2013 Firing (MMBtu)	2013 SO_2 Emissions (tons)	2014 Firing (MMBtu)	2014 SO_2 Emissions (tons)	24 Month Average (lb SO_2/MMBtu)
864 PH-1	269,202	0.37	274,304	0.39	0.0028
864 PH-11	372,326	0.52	296,766	0.42	0.0028
864 PH-12	468,212	0.64	356,643	0.48	0.0027
870 H-1	296,138	0.28	273,065	0.37	0.0023
870 H-2	278,182	0.35	260,841	0.37	0.0027
1332 H-2	261,616	0.41	330,380	0.68	0.0037
1332 H-3	201,939	0.28	232,411	0.41	0.0032
1332 H-601	202,370	0.29	193,024	0.32	0.0031
1332 H-602	295,751	0.42	337,219	0.59	0.0032

PES Refinery
Tier 3 Project Emissions
September 2015

Incremental Cooling Tower Emissions

Parameter	Value
Unit Name	864 Cooling Tower
Number of Units	1
Design Water Flow Rate (gpm)	600
Cooling Tower Drift Rate (% of circulating water)	0.005
Total Dissolved Solids (ppm)	600
Cycles of Concentration Ratio (tower/makeup water)	4
VOC EF (lb/MMgal)	0.7
PM_{10} Fraction	0.8843
$PM_{2.5}$ Fraction	0.0047

Parameter	PM [1]	PM_{10} [2]	$PM_{2.5}$ [2]	VOC
Hourly (lb/hr)	0.04	0.03	0.0002	0.03
Daily (lb/day)	0.9	0.8	0.004	0.60
Annual (TPY)	0.2	0.1	0.001	0.11

[1] PM calculated based on flow rate, drift rate, and total dissolved solids.

[2] Reisman, J. and Frisbie, G., "Calculating Realistic PM10 Emissions From Cooling Towers."

Factors:

60 min/hr
8.345 water density (CWS)
8760 hr/yr
2000 lb/ton

Example from Reisman/Frisbie Paper

EPRI Droplet Diameter (μm)	Droplet Volume (μm^3)	Droplet Mass (μg)	Particle Mass (Solids) (μg)	Solid Particle Volume (μm^3)	Solid Particle Diameter (μm)	EPRI % Mass Smaller
10	524	5.24E-04	3.14E-07	0.14	0.649	0.000
20	4189	4.19E-03	2.51E-06	1.14	1.297	0.196
30	14137	1.41E-02	8.49E-06	3.86	1.946	0.226
40	33510	3.35E-02	2.01E-05	9.14	2.595	0.514
50	65450	6.55E-02	3.93E-05	17.86	3.243	1.816
60	113097	1.13E-01	6.79E-05	30.86	3.892	5.702
70	179594	1.80E-01	1.08E-04	49.01	4.540	21.348
90	381704	3.82E-01	2.29E-04	104.16	5.838	49.812
110	696910	6.97E-01	4.18E-04	190.18	7.135	70.509
130	1150347	1.15E+00	6.91E-04	313.92	8.432	82.023
150	1767146	1.77E+00	1.06E-03	482.24	9.729	88.012
180	3053628	3.06E+00	1.83E-03	833.31	11.675	91.032
210	4849048	4.85E+00	2.91E-03	1323.26	13.621	92.468
240	7238229	7.24E+00	4.35E-03	1975.25	15.567	94.091
270	10305995	1.03E+01	6.19E-03	2812.41	17.513	94.689
300	14137167	1.41E+01	8.49E-03	3857.90	19.459	96.288
350	22449298	2.25E+01	1.35E-02	6126.21	22.702	97.011
400	33510322	3.35E+01	2.01E-02	9144.66	25.945	98.340
450	47712938	4.77E+01	2.86E-02	13020.42	29.188	99.071
500	65449847	6.55E+01	3.93E-02	17860.66	32.431	99.071
600	113097336	1.13E+02	6.79E-02	30863.22	38.918	100.000

PES Refinery
Tier 3 Project Emissions
September 2015

Incremental Sulfur Production Emissions

From 867 (2013)	Total Sulfur (Tons)
Jan-13	697.7
Feb-13	417.3
Mar-13	490.1
Apr-13	635.8
May-13	720.5
Jun-13	832.8
Jul-13	949.0
Aug-13	950.3
Sep-13	843.6
Oct-13	818.0
Nov-13	651.1
Dec-13	627.5
Total	8,633.7

2013 Total Emissions	
TOTAL SRU NO_x (ton)	**4.4**
TOTAL SRU CO (ton)	**172.2**
TOTAL SRU SO_2 (ton)	**11.5**

Additional Sulfur Production from 864/870

Total 894.6 lb/day = 326,518 lb/yr = 163.3 TPY

Parameter	Total Sulfur (tons)	NO_x (TPY)	CO (TPY)	SO_2 (TPY)
Future Total (TPY)	8,797.0	4.5	175.5	11.7
Increase (TPY)	163.3	0.1	3.3	0.2

PES Refinery
Tier 3 Project Emissions
September 2015

Fugitive Emission Estimates

864/870 Units	Additional Components			
	Valves	Flanges	Pumps	Connectors
Process Modifications*	125	250	13	0
Default-zero Emission Rate (kg/hr/source)**	7.8E-06	3.1E-07	2.4E-05	7.5E-06
(lb/yr/source)	1.5E-01	6.0E-03	4.6E-01	1.5E-01

Total VOC Emissions (lb/yr)	**18.88**	**1.50**	**6.04**	**0**
Total VOC Emissions (lb/yr)	**26.42**			
Total VOC Emissions (lb/hr)	**0.003**			
Total VOC Emissions (TPY)	**0.013**			

*All component counts are estimated at 115% to allow for final design flexibility
** EPA 1995 Protocol for Equipment Leak Emission Estimates, Table 2-12

Attachment D
Contemporaneous Emissions
Tables

PES Refinery
Summary of PSD Contemporaneous Period Emissions
September 2015

Facility	Permit No.	Activity	Effective Date of Change[1]	PSD Net Emission Change, Ton/Yr						
				NO_2	SO_2	$PM/PM_{10}/PM_{2.5}$	CO	H_2SO_4	Lead	CO_2e
Gir. Pt./Pt. Br.	RFD	3-Unit Train - Crude Transfer Pipeline	1/18/2013	0.00	0.00	0.00	Modeled[3]	0.00	0.00E+00	0
Point Breeze	13001	Tank P-590 (PB 843) Reactivation[2]	1/22/2013	0.27	0.18	0.05	Modeled[3]	0.00	0.00E+00	0
Gir. Pt./Pt. Br.	12270	Butane Truck Unloading at SRTF	3/5/2013	0.09	0.00	0.00	Modeled[3]	0.00	0.00E+00	0
Gir. Pt./Pt. Br.	13020	14-Unit Train - Crude Transfer Pipeline	4/8/2013	0.00	0.00	0.00	Modeled[3]	0.00	0.00E+00	0
Point Breeze	RFD	210 Light-Ends Improvement Project	8/21/2013	0.00	0.00	0.00	0.00	0.00	0.00E+00	0
Girard Point	RFD	Butane Logistics Project	1/13/2014	0.00	0.00	0.00	0.00	0.00	0.00E+00	0
Gir. Pt./Pt. Br.	12195	Heater Firing Rate Increase (7-Heater)	2/19/2014	237.42	12.57	20.31	Modeled[3]	0.00	1.77E-03	261,670
Point Breeze	RFD	210 VTB Cooling	3/21/2014	0.00	0.00	0.00	0.00	0.00	0.00E+00	0
Girard Point	14045	Butane Railcar Unloading	4/08/2014	0.56	0.04	0.11	1.31	0.00	0.00E+00	1,239
Point Breeze	13260	South Yard South Flare	7/18/2014	1.44	0.03	0.06	6.92	0.00	0.00E+00	618
Point Breeze	RFD	868 TCSS Distillate Recovery	6/9/2014	1.00	0.08	0.20	2.07	0.00	0.00E+00	0
Girard Point	RFD	1232 Distillate Recovery	7/25/2014	2.08	0.03	0.39	5.60	0.00	0.00E+00	0
Point Breeze	RFD	PB 210 V2 Stripper	7/25/2014	0.48	-6.85	-3.35	1.63	0.00	0.00E+00	0
Girard Point	14219-14220	Butane Terminal Firewater Pumps	8/11/2014	0.00	0.00	0.00	0.00	0.00	0.00E+00	0
Point Breeze	14237	Tank PB 36 (P-010) Gasoline Storage	8/29/2014	0.00	0.00	0.00	0.00	0.00	0.00E+00	0
Gir. Pt./Pt. Br.	14149	Boiler 45	9/2/2014	5.06	15.15	6.13	5.69	2.32	7.61E-04	182,774
Girard Point	RFD	1332 C-703 Steam Heat Exchanger	10/9/2014	0.21	0.00	0.01	0.13	0	0	0
Point Breeze	RFD	868 LCO Recovery Improvements	10/16/2014	0.75	0.14	0.16	2.65	0	0	0
Point Breeze	RFD	210C VTB Direct to 868	11/17/2014	0.21	0.34	0.19	0.85	0	0	0
Point Breeze	RFD	137 Depropanizer Feed	10/16/2014	0.00	0.00	0.00	0.00	0	0	0
Girard Point	RFD	433 Propane Processing Improvements	10/28/2014	1.00	0.07	0.20	2.22	0	0	0
Point Breeze	RFD	210 Debutanizer Cooling	Pending	0.00	0.00	0.00	0.00	0	0	0
Girard Point	RFD	1232 Absorber/ Stripper Tower	12/8/2014	0.00	0.00	0.00	0.00	0	0	0
Point Breeze	14368	Tank PB-848 Crude Storage	12/15/2014	0.00	0.00	0.00	0.00	0	0	0
Point Breeze	14369	Tank PB-844 Crude Storage	12/15/2014	0.00	0.00	0.00	0.00	0	0	0
Girard Point	RFD	GP 433 Emergency Relief	12/2/2014	0.00	0.00	0.00	0.00	0	0	0
Point Breeze	RFD	HDS Field Charge Pump	12/16/2014	0.06	0.20	0.13	2.26	0	0	0
Girard Point	RFD	Crude Off-loading Flexibility	Pending	0.00	0.00	0.00	0.00	0	0	0
Point Breeze	RFD	Tank PB-880 Crude Storage	Pending	0.00	0.00	0.00	0.00	0	0	0
Point Breeze	RFD	Tank PB-850 Crude Storage	Pending	0.00	0.00	0.00	0.00	0	0	0
Point Breeze	Application	Unit 864 PH-1, Unit 864 PH-11, Unit 864 PH-12 Heater Burner Replacements	Application	-11.91	0.00	0.00	0.00	0	0	0
Point Breeze	Application	Replacement of 864 PH-7	Application	-11.29	-0.33	-0.85	-9.42	0	0	-13,093
5-year increases and decreases from 1st Quarter 2015				**227.42**	**21.64**	**23.74**	**21.91**	**2.32**	**2.53E-03**	**433,208**

Notes:

1 The Effective Date of Change for emissions increases is considered the date of permit issuance and for emissions reductions it is the date of source shutdown.

2 Tank P-590 (PB 843) includes emissions from steam from No. 3 Boiler House that were already permitted in No. 3 Boiler House NOx Reduction Project in 2008.

3 Plan Approval 12195 triggered PSD Modeling for CO, which showed no CO concentration from project and contemporaneous projects that were above the CO SIL. Therefore, all increases from 9/9/2008 through 9/6/13 (date of application) are excluded from future project netting.

PES Refinery
Summary of NANSR Contemporaneous Period Emissions
September 2015

25 Pa Code 127.203(b)(1)(i) 5 Calendar Year Increases

Facility	Permit No.	Activity	Effective Date of Change[1]	NANSR Net Emission Change, Ton/Yr	
				VOC	NO_x
Gir. Pt./Pt. Br.	RFD	3-Unit Train - Crude Transfer Pipeline	1/18/2013	Offset[2]	0.00
Point Breeze	13001	Tank P-590 (PB 843) Reactivation[3]	1/22/2013	Offset[2]	Offset[2]
Gir. Pt./Pt. Br.	12270	Butane Truck Unloading at SRTF	3/5/2013	Offset[2]	Offset[2]
Gir. Pt./Pt. Br.	13020	14-Unit Train - Crude Transfer Pipeline	4/8/2013	Offset[2]	0.00
Point Breeze	RFD	210 Light-Ends Improvement Project	8/21/2013	0.01	0.00
Girard Point	RFD	Butane Logistics Project	1/13/2014	0.0005	0.00
Gir. Pt./Pt. Br.	12195	Heater Firing Rate Increase (7-Heater)	2/19/2014	Offset[2]	Offset[2]
Point Breeze	RFD	210 VTB Cooling	3/21/2014	0.002	0.00
Girard Point	14045	Butane Railcar Unloading	4/08/2014	2.70	0.56
Point Breeze	13260	South Yard South Flare	7/18/2014	2.42	1.44
Point Breeze	RFD	868 TCSS Distillate Recovery	6/9/2014	0.15	1.00
Girard Point	RFD	1232 Distillate Recovery	7/25/2014	0.30	2.08
Point Breeze	RFD	PB 210 V2 Stripper	7/25/2014	0.15	0.48
Girard Point	14219-14220	Butane Terminal Firewater Pumps	8/11/2014	0.00	0.00
Gir. Pt./Pt. Br.	14149	Boiler 45	9/2/2014	1.45	5.06
Girard Point	RFD	1332 C-703 Steam Heat Exchanger	10/09/2014	0.01	0.21
Point Breeze	RFD	868 LCO Recovery Improvements	10/16/2014	0.11	0.75
Point Breeze	RFD	210C VTB Direct to 868	11/17/2014	0.03	0.21
Point Breeze	RFD	137 Depropanizer Feed	10/16/2014	0.00	0.00
Girard Point	RFD	433 Propane Processing Improvements	10/28/2014	0.16	1.00
Point Breeze	RFD	210 Debutanizer Cooling	Pending	0.00	0.00
Girard Point	RFD	1232 Absorber/ Stripper Tower	12/8/2014	0.03	0.00
Point Breeze	14368	Tank PB-848 Crude Storage	12/15/2014	1.01	0.00
Point Breeze	14369	Tank PB-844 Crude Storage	12/15/2014	1.09	0.00
Girard Point	RFD	GP 433 Emergency Relief	12/2/2014	0.00	0.00
Point Breeze	RFD	HDS Field Charge Pump	12/16/2014	0.09	0.06
Girard Point	RFD	Crude Off-loading Flexibility	1/8/2015	0.00	0.00
SRTF	RFD	Butane Blending at SRTF	3/2/2015	0.00	0.00
Point Breeze	RFD	Tank PB-880 Crude Storage	Pending	1.24	0.00
Point Breeze	RFD	Tank PB-850 Crude Storage	Pending	1.24	0.00
SRTF	Pending	Butane Compressor	Pending	0.01	0.00
Point Breeze	14237	Tank PB 36 (P-010) Gasoline Storage	Pending	0.97	0.00
5-calendar year increases from 1st Quarter 2015[4,5]				**13.17**	**12.84**

Notes:

1 The Effective Date of Change for emissions increases is considered the date of permit issuance and for emissions reductions it is the date of source shutdown.

2 Plan Approval 12195 triggered NSR for VOC & NO_x. All increases from calendar years 2009 through 9/6/13 (date of application) were offset.

3 Tank P-590 (PB 843) includes emissions from steam from No. 3 Boiler House that were already permitted in No. 3 Boiler House NO_x Reduction Project in 2008.

4 NSR contemporaneous period for VOC and NO_x is 5 calendar years (the year of modification plus back 4 more years).

5 Consent Decree emissions credits from the shutdown of the Marcus Hook 10-4 FCC and LSG units are not available except in certain situations as described in the Consent Decree.

PES Refinery
Summary of NANSR Contemporaneous Period Emissions
September 2015

25 Pa Code 127.203(b)(1)(ii) 10 Year Increases/Decreases

Facility	Permit No.	Activity	Effective Date of Change[1]	NANSR Net Emission Change, Ton/Yr	
				VOC	NO_x
Gir. Pt./Pt. Br.	04322	1232 Flue Gas Treating & Expansion	2/28/2006	0.00	0.00
Point Breeze	05219	866 Unit Modification for ULSD mode	3/7/2006	0.00	0.00
Girard Point	NA	Demin. valves and flanges at Units 433/869	2006	0.00	0.00
Girard Point	06050	433 HFAU Process Improvement Project	12/4/2006	0.00	0.00
Girard Point	07026	231 Imported Jet Project	6/13/2007	0.00	0.00
Gir. Pt./Pt. Br.	06144	859 ULSD Project[3]	1/29/2008	0.00	0.00
Girard Point	08080	No. 3 Boiler House NO_x Reduction	9/9/2008	12.52	0.00
Girard Point	RFD	Unit 433 KOH Treater Lines	10/23/2008	0.01	0.19
Point Breeze	RFD	Unit 866 Stripper Valve	12/22/2008	0.30	0.06
Point Breeze	08255	Unit 865 Improvement Project	2/23/2009	0.97	9.42
Girard Point	09022	Unit 137 RFG Changes	3/3/2009	0.02	0.00
Girard Point	09116	Unit 433 ASO to Unit 137 Desalter	6/5/2009	0.02	0.00
Girard Point	09040	Unit 1332 Heater SEP	2/1/2010	0.03	0.87
Point Breeze	non permit letter	Tk 33/35 Jump-over line	11/23/2010	0.03	0.00
Gir. Pt./Pt. Br.	RFD	3-Unit Train - Crude Transfer Pipeline	1/18/2013	Offset[5]	0.00
Point Breeze	13001	Tank P-590 (PB 843) Reactivation[4]	1/22/2013	Offset[5]	Offset[5]
Gir. Pt./Pt. Br.	12270	Butane Truck Unloading at SRTF	3/5/2013	Offset[5]	Offset[5]
Gir. Pt./Pt. Br.	13020	14-Unit Train - Crude Transfer Pipeline	4/8/2013	Offset[5]	0.00
Point Breeze	RFD	210 Light-Ends Improvement Project	8/21/2013	0.01	0.00
Girard Point	RFD	Butane Logistics Project	1/13/2014	0.0005	0.00
Gir. Pt./Pt. Br.	12195	Heater Firing Rate Increase (7-Heater)[5]	2/19/2014	Offset[5]	Offset[5]
Point Breeze	RFD	210 VTB Cooling	3/21/2014	0.002	0.00
Girard Point	14045	Butane Railcar Unloading	4/08/2014	2.70	0.56
Point Breeze	13260	South Yard South Flare	7/18/2014	2.42	1.44
Point Breeze	RFD	868 TCSS Distillate Recovery	6/9/2014	0.15	1.00
Girard Point	RFD	1232 Distillate Recovery	7/25/2014	0.30	2.08
Point Breeze	RFD	PB 210 V2 Stripper	7/25/2014	0.15	0.48
Girard Point	14219-14220	Butane Terminal Firewater Pumps	8/11/2014	0.00	0.00
Point Breeze	14237	Tank PB 36 (P-010) Gasoline Storage	8/29/2014	1.30	0.00
Gir. Pt./Pt. Br.	14149	Boiler 45	9/2/2014	1.45	5.06
Girard Point	RFD	1332 C-703 Steam Heat Exchanger	10/09/2014	0.01	0.21
Point Breeze	RFD	868 LCO Recovery Improvements	10/16/2014	0.11	0.75
Point Breeze	RFD	210C VTB Direct to 868	11/17/2014	0.03	0.21
Point Breeze	RFD	137 Depropanizer Feed	10/16/2014	0.00	0.00
Girard Point	RFD	433 Propane Processing Improvements	10/28/2014	0.16	1.00
Point Breeze	RFD	210 Debutanizer Cooling	Pending	0.00	0.00
Girard Point	RFD	1232 Absorber/ Stripper Tower	12/8/2014	0.03	0.00
Point Breeze	14368	Tank PB-848 Crude Storage	12/15/2014	1.01	0.00
Point Breeze	14369	Tank PB-844 Crude Storage	12/15/2014	1.09	0.00
Girard Point	RFD	GP 433 Emergency Relief	12/2/2014	0.00	0.00
Point Breeze	RFD	HDS Field Charge Pump	12/16/2014	0.09	0.06
Girard Point	RFD	Crude Off-loading Flexibility	1/8/2015	0.00	0.00
SRTF	RFD	Butane Blending at SRTF	3/2/2015	0.00	0.00
Point Breeze	RFD	Tank PB-880 Crude Storage	Pending	1.24	0.00
Point Breeze	RFD	Tank PB-850 Crude Storage	Pending	1.24	0.00
SRTF	Pending	Butane Compressor	Pending	0.01	0.00
Point Breeze	14237	Tank PB 36 (P-010) Gasoline Storage	Pending	0.97	0.00
Point Breeze	Application	Unit 864 PH-1, Unit 864 PH-11, Unit 864 PH-12 Heater Burner Replacements	Application	0.00	0.00
10-year increases/decreases from 1st Quarter 2015[6]				**28.37**	**23.39**

Notes:

1 The Effective Date of Change for emissions increases is considered the date of permit issuance and for emissions reductions it is the date of source shutdown.

2 Plan Approval 04237 triggered NSR for VOC.

3 Plan Approval 06144 triggered NSR for VOC & NO_x.

4 Tank P-590 (PB 843) includes emissions from steam from No. 3 Boiler House that were already permitted in No. 3 Boiler House NO_x Reduction Project in 2008.

5 Plan Approval 12195 triggered NSR for VOC & NOx. All increases from calendar years 2009 through 9/6/13 (date of application) were offset.

6 Consent Decree emissions credits from the shutdown of the Marcus Hook 10-4 FCC and LSG units are not available except in certain situations as described in the Consent Decree.

PES Refinery
Emissions Reduction Credits Available
September 2015

Facility	Permit No.	Source	Effective Date	Creditable Emissions Reductions, Tons						
				VOC	NO_x/NO_2	SO_2	$PM/PM_{10}/PM_{2.5}$	CO	H_2SO_4	CO_2e
Point Breeze	non permit letter	22 Boilerhouse #2/#3	1/19/2010	-0.99	-36.40	-1.25	-1.41	-0.38	n/a	-49,788
Marcus Hook	non permit letter	15-1 CRUDE HTR shutdown	8/16/2012	-5.05	-136.46	-0.15	-7.02	-77.24	n/a	-111,102
Marcus Hook	non permit letter	17-2A H-01, H-02, H-03 HTR shutdown	8/16/2012	-2.72	-57.04	-0.05	-3.75	-41.19	n/a	-44,912
Marcus Hook	non permit letter	17-2A H-04 HTR shutdown	8/16/2012	-0.35	-6.21	-0.01	-0.50	-5.25	n/a	-8,250
Marcus Hook	non permit letter	12-3 CRUDE HTR H-3006 shutdown	8/16/2012	-4.61	-89.48	-0.13	-6.36	-70.37	n/a	-92,084
Marcus Hook	non permit letter	12-3 DESULF HTR	8/16/2012	-0.33	-6.06	-0.01	-0.48	-5.09	n/a	-4,819
Marcus Hook	non permit letter	111 Cooling Towers	8/16/2012	-19.94	0.00	0.00	-10.24	0.00	n/a	0
Total ERCs Generated				-33.97	-331.64	-1.60	-29.75	-199.50	0.00	-310,956
NSR maximum netting credits needed in the 12195 Heater Plan Approval Application				33.80	195.95	---	---	---	---	---
Total ERCs Remaining*				-0.17	-135.69	-1.60	-29.75	-199.50	0.00	-310,956
Total ERCs Remaining without Marcus Hook				-0.17	-36.40	-1.25	-1.41	-0.38	0.00	-49,788

Notes:
* PES is in active discussion with AMS regarding the accounting of emission reductions from the former Marcus Hook Refinery that were established while the facility was considered part of the Philadelphia Refining Complex. For the purposes of this application, these reductions are not considered contemporaneous.

Facility	Permit No.	Source	Effective Date	Fourth Amendment to Consent Decree - Civil Action No. 05-02866 - Available Emissions Credits, Tons						
				VOC	NO_x	SO_2	$PM_{10}/PM_{2.5}$	CO	H_2SO_4	CO_2e
Marcus Hook	Consent Decree	Source 101 10-4 FCC Unit	8/17/2012	-1.26	-92.38	-128.38	-315.36	-364.92	-56.07	-894,018.9
Marcus Hook	Consent Decree	Source 040 10-4 Feed Heater	8/17/2012	-0.74	-12.85	-0.01	-2.13	-0.36	0	-3,848.2
Marcus Hook	Consent Decree	Source 705 LSG HDS Heater	8/17/2012	-0.13	-5.14	-0.01	-0.29	-0.01	0	-16,551.0
Marcus Hook	Consent Decree	Source 706 LSG Stabilizer Heater	8/17/2012	-0.08	-1.08	-0.02	-0.16	-0.31	0	-10,868.7
Total Emissions Credits				-2.21	-111.37	-128.42	-317.94	-365.6	-56.07	-922,286.83
Emissions credits needed in the 14149 Boiler 45 Plan Approval Application				---	---	---	---	---	---	185,133.63
Total Emissions Credits Remaining				-2.21	-111.37	-128.42	-317.94	-365.6	-56.07	-737,153.20

Notes:
Consent Decree Emissions Reductions can only be used for emissions units that meet the following criteria:
1 - For heaters and boilers, a limit of 0.020 lbs NO_x per million BTU or less on a 3-hour rolling average basis.
2 - For heaters and boilers, a limit of 162 ppmvd of hydrogen sulfide in fuel gas or 20 ppmvd SO_2 corrected to 0% O_2 both on a 3-hour rolling average, and 60 ppmv hydrogen sulfide in fuel gas on a 365-day average.
3 - For heaters and boilers, no liquid or solid fuel firing authorization.
4 - For FCCUs, a limit of 20 ppmvd NO_x corrected to 0% O_2 or less on a 365-day rolling average basis; a limit of 25 ppmvd SO_2 corrected to 0% O_2 or less on a 365-day rolling average basis; and a limit of 0.5 pound of PM per 1000 pounds of coke burned on a 3-hour average basis.
5 - For Flaring Devices, 162 ppmv hydrogen sulfide in gas burned in the flare on a 3-hour rolling average.
6 - For Sulfur Recovery Plants, NSPS Subpart Ja emission limits.
7 - For emissions units other than those listed in items 1 through 6 above at which credits are being used, Best Available Control Technology ("BACT"), Best Available Technology ("BAT") or Lowest Achievable Emission Rate ("LAER"), as determined by AMS.

Attachment E
Best Available Technology NO_x
Control Cost Effectiveness
Calculations

PES Refinery
Tier 3 Project
BAT Control Cost Effectiveness Summary

	A	B	C	D	E	F	G	H	I	J
Control Option	Potential Firing Rates (MMBtu/hr)	Current Emission Rate (lb/MMBtu)	Potential Emissions (TPY)	Control Efficiency (%)	Maximum Post Control Emissions (TPY)	Potential NO_x Reduced (TPY)	2013 Total Capital Cost ($)	2013 O&M Cost ($)	2013 Annualized Cost[1] ($)	2013 Cost Effectiveness ($/Ton)
Unit 864 PH-7R Heater - SCR[1]	70.0	0.02	6.5	85%	1.0	5.5	3,153,207	109,882	757,414	137,461
Unit 870 H-3 Heater - SCR	110.0	0.03	14.5	85%	2.2	12.3	4,138,885	150,847	1,000,794	81,459
Calculation			= A * B * 8760 / 2000		= C * (1 - D)	= C - E			= (G * ACF) + H	= I / F

[1] SCR = Selective Catalytic Reduction

Assumptions:

Number of Years (n)	20
Interest Rate, % (i)	20
Annualized Cost Factor (ACF)	0.21

$$ACF = \frac{i(1+i)^n}{(1+i)^n - 1}$$

Year	*Chemical Engineering* Cost Index
1986	318.4
1991	361
2013	567.3
Cost Escalation Factor for SCR[1]	1.78
Cost Escalation Factor for Utilities[2]	1.57

[1] Cost data from *Alternative Control Techniques Document - NO_x Emissions from Process Heaters (Revised)* - EPA-453/R-93-034 scaled from 1986 to 2012 costs using the Cost Escalation Factor.

[2] Cost data from *Alternative Control Techniques Document - NO_x Emissions from Process Heaters (Revised)* - EPA-453/R-93-034 scaled from 1991 to 2012 costs using the Cost Escalation Factor.

PES Refinery
Tier 3 Project
Unit 864 PH-7R BAT Control Cost Effectiveness

Source	**Unit 864 PH-7R**	
Control	**SCR**	
Rated Heat Input	**70.0**	**MMBtu/hr**
Baseline Actual Emissions	**6.5**	**tpy**
Current Emission Rate	**0.02**	**lb/MMBtu**
Control Efficiency	**85%**	
Heater Capacity	**73.9**	**GJ/hr**

Evaluated at New Firing Limit at 2013 Cost and Efficiencies
Costs derived from *Alternative Control Techniques Document - NOx Emissions from Process Heaters (Revised)* - EPA-453/R-93-034

COST COMPONENT:	COST ($)
DIRECT COSTS	
Purchased Equipment Costs	
Equipment Cost (EC)	3,061,366
Instrumentation (Included in above costs)	---
Sales taxes (Included in above costs)	---
Freight (Included in above costs)	---
Subtotal - Purchased Equipment Costs (PEC)	**3,061,366**
Direct Installation Costs	
Foundations & supports; handling & erection; electrical; piping; etc.	0
Site Preparation / Buildings- Included above	---
Subtotal - Direct Installation Costs	**0**
TOTAL DIRECT COSTS (TDC)	**3,061,366**
INDIRECT INSTALLATION COSTS	
Engineering Costs (Included in above costs)	---
Construct. & Field Expenses (Included in above costs)	---
Contractor Fees (Included in above costs)	---
Start-up (Included in above costs)	---
Performance Test (Included in above costs)	---
Contingency (3% of PEC)	91,841
TOTAL INDIRECT COSTS, IC	**91,841**
TOTAL CAPITAL INVESTMENT (TCI)	**3,153,207**

PES Refinery
Tier 3 Project
Unit 864 PH-7R BAT Control Cost Effectiveness

Source	**Unit 864 PH-7R**	
Control	**SCR**	
Rated Heat Input	**70.0**	**MMBtu/hr**
Baseline Actual Emissions	**6.5**	**tpy**
Current Emission Rate	**0.02**	**lb/MMBtu**
Control Efficiency	**85%**	
Heater Capacity	**73.9**	**GJ/hr**

COST COMPONENT:	COST ($)
ANNUAL DIRECT COSTS	
Operation and Maintenance Labor	
Maintenance Labor and Material (2.75% of TCI)	86,713
	86,713
Utilities	
Ammonia Cost	941
Catalyst Replacement Cost	22,227
Electricity Cost	0.1
Subtotal - Utilities	**23,169**
TOTAL ANNUAL DIRECT COSTS	**109,882**

COST COMPONENT:		COST ($)
TOTAL ANNUAL O&M COSTS		**109,882**
Annualized Cost Factor		
	Equipment Life (years) = 20	
	Interest Rate (%) = 20	
Annualized Cost Factor		0.21
CAPITAL RECOVERY COSTS		
TOTAL CAPITAL REQUIREMENT		3,153,207
TOTAL ANNUAL CAPITAL REQUIREMENT		**647,532**
TOTAL ANNUALIZED COST ***(Total annual O&M cost and annualized capital cost)***		**757,414**

PES Refinery
Tier 3 Project
Unit 870 H-3 BAT Control Cost Effectiveness

Source	**Unit 870 H-3**	
Control	**SCR**	
Rated Heat Input	**110.0**	**MMBtu/hr**
Baseline Actual Emissions	**14.5**	**tpy**
Current Emission Rate	**0.03**	**lb/MMBtu**
Control Efficiency	**85%**	
Heater Capacity	**116.1**	**GJ/hr**

Evaluated at New Firing Limit at 2013 Cost and Efficiencies
Costs derived from *Alternative Control Techniques Document - NOx Emissions from Process Heaters (Revised)* - EPA-453/R-93-034

COST COMPONENT:	COST ($)
DIRECT COSTS	
Purchased Equipment Costs	
Equipment Cost (EC)	4,018,335
Instrumentation (Included in above costs)	---
Sales taxes (Included in above costs)	---
Freight (Included in above costs)	---
Subtotal - Purchased Equipment Costs (PEC)	**4,018,335**
Direct Installation Costs	
Foundations & supports; handling & erection; electrical; piping; etc.	0
Site Preparation / Buildings- Included above	---
Subtotal - Direct Installation Costs	**0**
TOTAL DIRECT COSTS (TDC)	**4,018,335**
INDIRECT INSTALLATION COSTS	
Engineering Costs (Included in above costs)	---
Construct. & Field Expenses (Included in above costs)	---
Contractor Fees (Included in above costs)	---
Start-up (Included in above costs)	---
Performance Test (Included in above costs)	---
Contingency (3% of PEC)	120,550
TOTAL INDIRECT COSTS, IC	**120,550**
TOTAL CAPITAL INVESTMENT (TCI)	**4,138,885**

PES Refinery
Tier 3 Project
Unit 870 H-3 BAT Control Cost Effectiveness

Source	**Unit 870 H-3**	
Control	**SCR**	
Rated Heat Input	**110.0**	**MMBtu/hr**
Baseline Actual Emissions	**14.5**	**tpy**
Current Emission Rate	**0.03**	**lb/MMBtu**
Control Efficiency	**85%**	
Heater Capacity	**116.1**	**GJ/hr**

COST COMPONENT:	COST ($)
ANNUAL DIRECT COSTS	
Operation and Maintenance Labor	
Maintenance Labor and Material (2.75% of TCI)	113,819
	113,819
Utilities	
Ammonia Cost	2,099
Catalyst Replacement Cost	34,929
Electricity Cost	0.2
Subtotal - Utilities	**37,027**
TOTAL ANNUAL DIRECT COSTS	**150,847**

COST COMPONENT:	COST ($)
TOTAL ANNUAL O&M COSTS	**150,847**
Annualized Cost Factor	
Equipment Life (years) = 20	
Interest Rate (%) = 20	
Annualized Cost Factor	0.21
CAPITAL RECOVERY COSTS	
TOTAL CAPITAL REQUIREMENT	4,138,885
TOTAL ANNUAL CAPITAL REQUIREMENT	**849,947**
TOTAL ANNUALIZED COST ***(Total annual O&M cost and annualized capital cost)***	**1,000,794**

File Number:

15253

RECEIPT

CITY OF PHILADELPHIA
DEPARTMENT OF PUBLIC HEALTH
PUBLIC HEALTH SERVICES

AIR MANAGEMENT SERVICES
321 University Avenue
Philadelphia, PA 19104-4543
Phone: (215) 685-7572
Fax: (215) 685-7593

Location of Installation:

SUNOCO, INC. (R&M)
3144 PASSYUNK AVENUE
Philadelphia, PA 19145

Owner's/Contact's Name and Address:

SUNOCO, INC. (R&M)
3144 PASSYUNK AVE
PHILADELPHIA, PA 19145

Philadelphia Code	Fund	Division	Dept.	Source	Fee
Minor Facility Permit	01	260	020	3201	$
Indefinite License	01	260	020	3215	
Minor Facility License	01	260	020	3216	
Pennsylvania Code	**Fund**	**Index Code**		**Source**	**Fee**
Plan Approval	08	143582		3201	1700
Operating Permit	08	143582		3201	
Annual Administrative Fee	08	143582		3216	
Emission	08	143391		3216	

Air Management Services Contact: ED WIENER, CHIEF SOURCE RE Date Received: 9/4/2015

VERIFY THE AUTHENTICITY OF THIS MULTI-TONE SECURITY DOCUMENT. CHECK BACKGROUND AREA CHANGES COLOR GRADUALLY FROM TOP TO BOTTOM.

PHILADELPHIA ENERGY SOLUTIONS
REFINING AND MARKETING LLC
1735 MARKET STREET
PHILADELPHIA, PA 19103

PHILADELPHIA ENERGY SOLUTIONS

0001006609
August 29, 2015
64-1278/611
VOID AFTER 120 DAYS

Amount: **One Thousand Seven Hundred dollars and 00 cents** **$1,700.00**

Pay to the order of
CITY OF PHILADELPHIA
321 UNIVERSITY AVE
PHILADELPHIA, PA 19104-4543

Bank of America N.A.
Atlanta, Dekalb County, Georgia

Rachel Cerbetti
AUTHORIZED SIGNATURE

VENDOR NO. 0000100226

⑈0001006609⑈ ⑆061112788⑆ 3359998997⑈