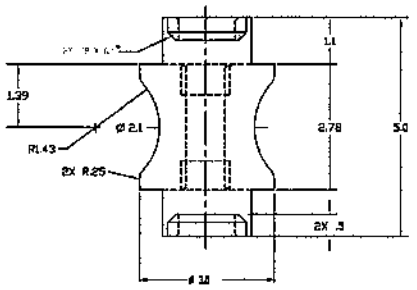


(24) 4 FINAL DIMENSION AFTER HEAT TREATMENT SHALL BE NO GREATER THAN 1.995 +.005/-.000 ON -3 PART.

NOTES:

1. DIMENSIONING AND TOLERANCING SHALL BE INTERPRETED IN ACCORDANCE WITH ASME Y 14.5M.
2. WELDING AND INSPECTION SHALL BE IN ACCORDANCE WITH NAVSEA S9074-AR-GIB-010/278, CLASS N2, CAT C. WELD WIRE SHALL BE IN ACCORDANCE WITH AWS D9.1.
3. HEAT TREAT IN ACCORDANCE WITH SAE AMS 2759/3 TO CONDITION H950, 40-46 HRC.
4. (43) EACH FINISHED PART SHALL BE 100% MAGNETIC PARTICLE INSPECTED IN ACCORDANCE WITH ASTM D1444. PERFORMED BY BOTH CIRCULAR AND LONGITUDINAL METHOD. THE WET PROCESS SHALL BE USED. PARTS MUST MEET THE REQUIREMENTS OF MIL-STD-1949. NO INDICATIONS GREATER THAN .062 ARE ACCEPTABLE.
5. SCRIBE OUT AREA AROUND WELDS AS NEEDED WHERE SHOWN TO REMOVE EXCESS WELD AND ENSURE CLEARANCE FOR MATING COLLAR PINS (REFERENCE 525150-123).
6. IDENTIFY WITH CAGE CODE-PART NUMBER AND CONTRACT NUMBER IN ACCORDANCE WITH MIL-STD-130, WHERE SHOWN.
7. FINAL DIMENSION AFTER HEAT TREATMENT SHALL BE .905 +.004/-.002 ON -3 PART. MACHINE AS NECESSARY.
8. (24) FINAL DIMENSION AFTER HEAT TREATMENT SHALL BE Ø .905 ± .002 THRU ON -3 PART. MACHINE AS NECESSARY.
9. FINAL DIMENSION AFTER HEAT TREATMENT SHALL BE NO GREATER THAN Ø 1.995 +.005/-.000 ON -3 PART.

COMPUTER DRAWING

REVISIONS

| SYM | DESCRIPTION | DATE | APPROVED |
|---|---|---|---|
| A | REDRAWN WITH CHANGE. CL-9/REV/ARN. DL/LEUNG/43 ADDED SUGGESTED SOURCE OF SUPPLY. (2) NOTES: (3) UPDATED NOTE 4. REASON:(1) ADDED TABLE DUE TO COMPLEXITY OF MACHINING. (2) UPDATE BWS. LOA/MAINTANCE MGF. | 3/31/98 | D.H. 4.8.2.2. |
| B | REDRAWN WITH CHANGE. CL-9/REV/ARN. DL SOURCE BLOCK: (1) WAS "SUGGESTED" (2) CAGE CODE WAS "66035". (3) PART NUMBER WAS "525129" REASON: TO CORRECT DWG. LOA/MAINTANCE MGF. | 4/14/98 | D.H. 4.8.2.2. |
| C | REDRAWN WITH CHANGE. CL-9/REV/ARN. DL/LEUNG ADDED ITEMS 3 & 4. DL/BRANCH CHANGED SHEET 2, 525129-3. (1) ADDED 525129-1 INACTIVE. DL/NOTES: (1) ADDED NOTE 7, 8, 9 & 10. DL/BWS: (1) ADDED 525129-3. REASON: TO INCREASE MANUFACTURING PRODUCIBILITY AND INCORP. 525129-3 FOR PROCUREMENT. ECP-01-MART-0096 LOA/MAINTANCE MGF. | 9/24/99 | D.H. 4.8.2.3. |

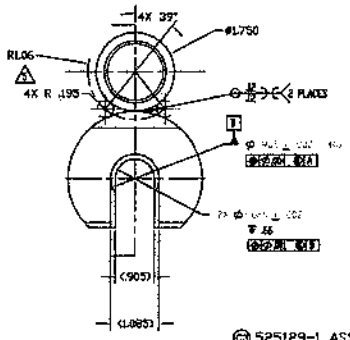


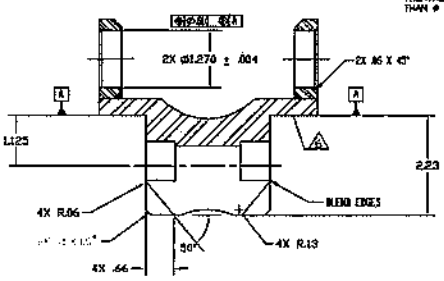


(65) 525129-1 ASSEMBLY INACTIVE FOR NEW PROCUREMENT.

(64) APPROVED SOURCE OF SUPPLY

| VENDOR | CAGE | DASH NO. | PART NO. |
|---|---|---|---|
| NAVAIR LAKEHURST HWY. 547 CODE: 4.8.8.8. LAKEHURST, NJ 08733 | (63) 80020 | | 525129-1 (63) |
| NAVAIR LAKEHURST HWY. 547 CODE: 4.8.8.8. LAKEHURST, NJ 08733 | 80020 | | 525129-3 (65) |

(62) SEE SHEET 2 FOR 525129-3.

| NEXT ASSY | DASH NUMBER | PART NUMBER | DESCRIPTION | NOMINAL STOCK SIZE | MATERIAL | SPECIFICATION | ITEM NO. |
|---|---|---|---|---|---|---|---|
| | 2 | - | 488964-1 | RING | ST. STEEL | PH13-8MO, COND. A, AMS 5629 | 4 |
| | 1 | - | 488965-1 | BODY | ST. STEEL | PH13-8MO, COND. A, AMS 5629 | 3 |
| 760003 | X | X | 525129-3 | PROBE CHOCK | ST. STEEL | PH13-8MO, COND. A, AMS 5629 | 2 |
| 760003 | X | X | 525129-1 | PROBE CHOCK | INACTIVE ST. STEEL | PH13-8MO, COND. A, AMS 5629 | 1 |
| | -3 | -1 | | | | | |

UNLESS DIMENSIONS SPECIFIED DIMENSIONS ARE IN INCHES. TOLERANCES

NAVAL AIR WARFARE CENTER
AIRCRAFT DIVISION, LAKEHURST, N.J. 08733-5000

TITLE
RSD ARRESTING BEAM PROBE CHOCK ASSEMBLY RAST SYSTEM

DESIGNED FOR HELICOPTER LANDING SYSTEM

| | | |
|---|---|---|
| DRAWN | D. LEUNG | 03SEP96 |
| CHECKED | H. FRIEDMAN | 03SEP96 |
| ANALYSIS | D. LEUNG | 03SEP96 |
| APPROVED | D. HOFFMAN | 4OCT04 |
| PROJECT LEADER | D. LEUNG | 03SEP96 |
| APPROVED FOR RELEASE | D. HOFFMAN | 4OCT04 |

SIZE D | CODE IDENT 80020 | DRAWING NO. 525129 | REV C
SCALE FULL | SHEET 1 OF 2

525129