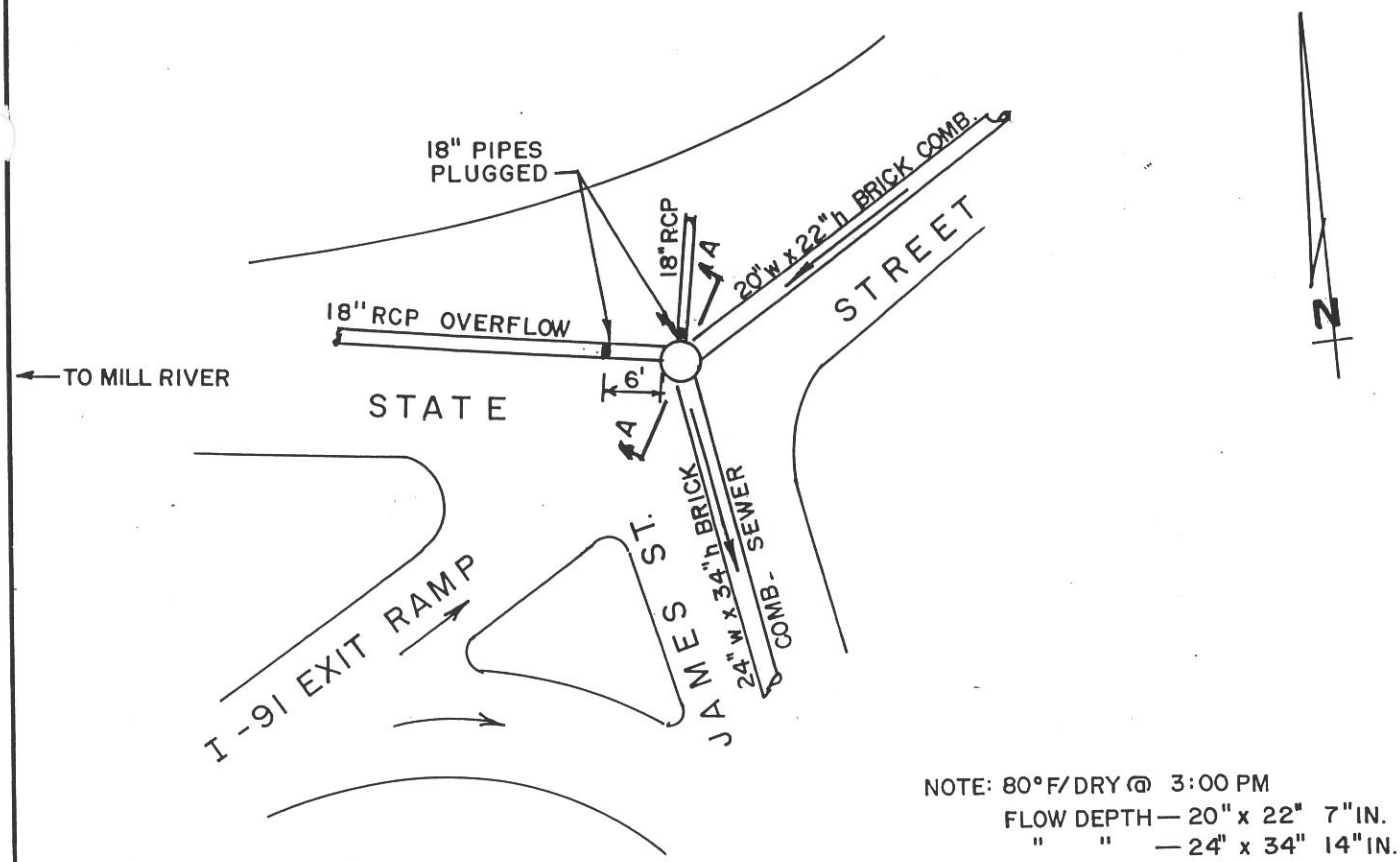

NOTE: 80°F/DRY @ 3:00 PM
FLOW DEPTH — 20" x 22" 7" IN.
" " — 24" x 34" 14" IN.

PLAN

N. T. S.

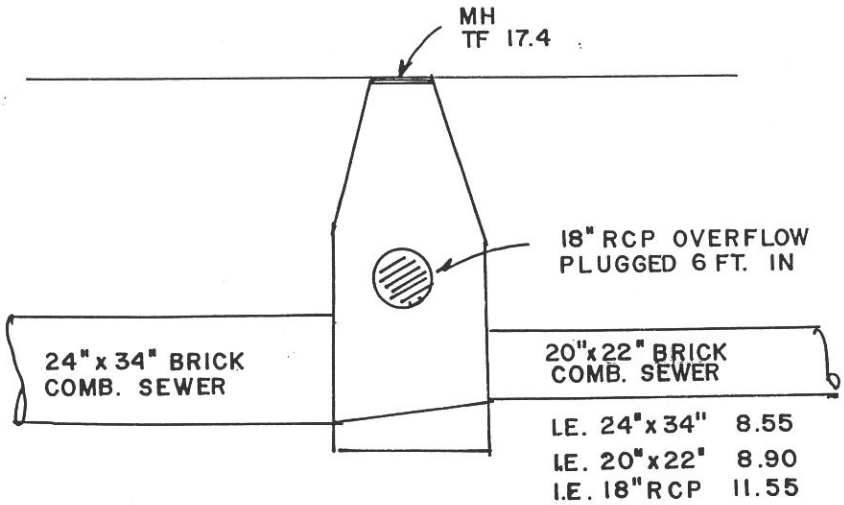

SECTION A—A

N. T. S.

LEGEND

WET WEATHER FLOW

DRY WEATHER FLOW

OVERFLOW NO. OS I
STATE ST. @ JAMES ST.
NEW HAVEN, CONNECTICUT

DATE: 7-8-97

JOB NO. 1146

SHT. NO. 5

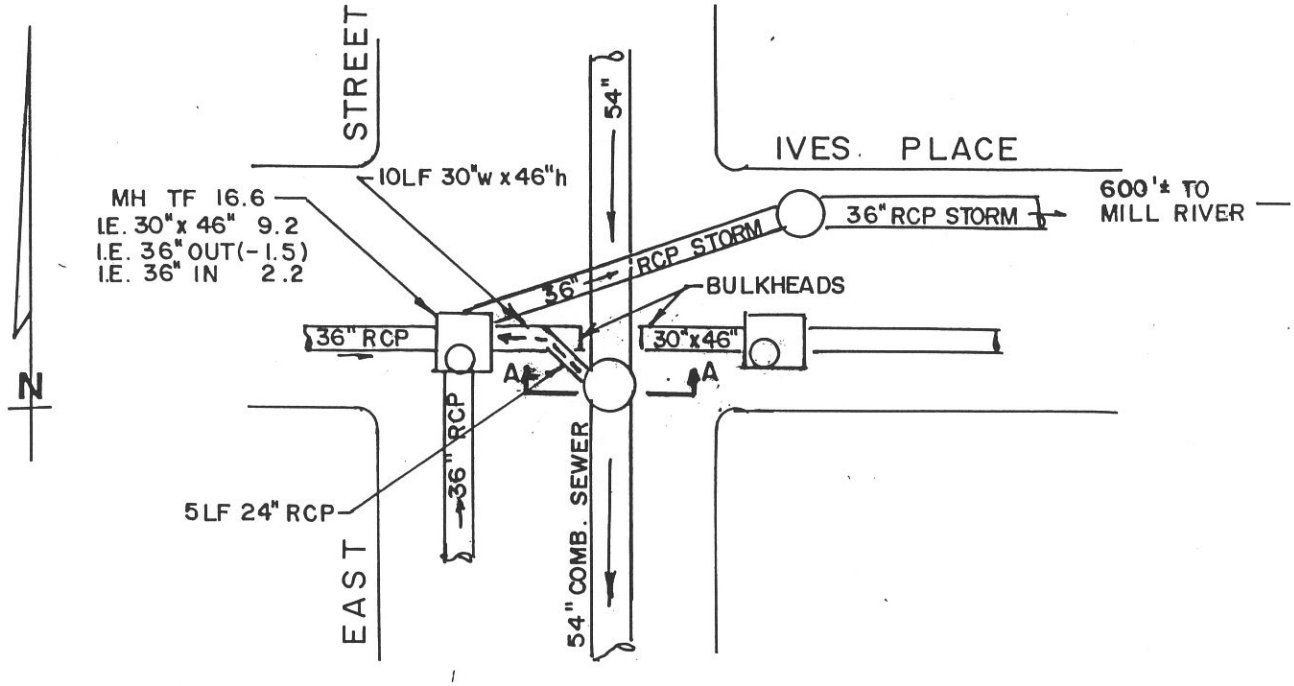

NOTE: 85° F / DRY @ 7:30 AM
FLOW DEPTH 1.6' FT. IN 54"

PLAN

N. T. S.

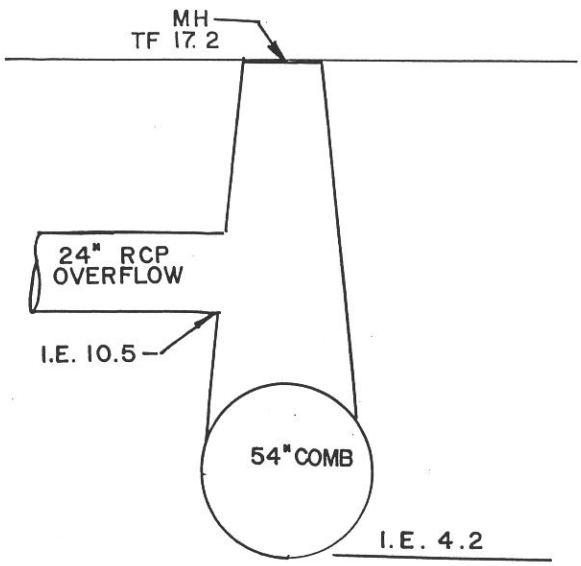

SECTION A-A

N. T. S.

LEGEND

WET WEATHER FLOW

DRY WEATHER FLOW

OVERFLOW NO. OE 7
EAST ST. @ IVES PL.
NEW HAVEN, CONNECTICUT

DATE: 7-15-97

JOB NO. 1146

SHT. NO. 11

MIDDLETOWN AVENUE

OVERFLOW
OS-2A

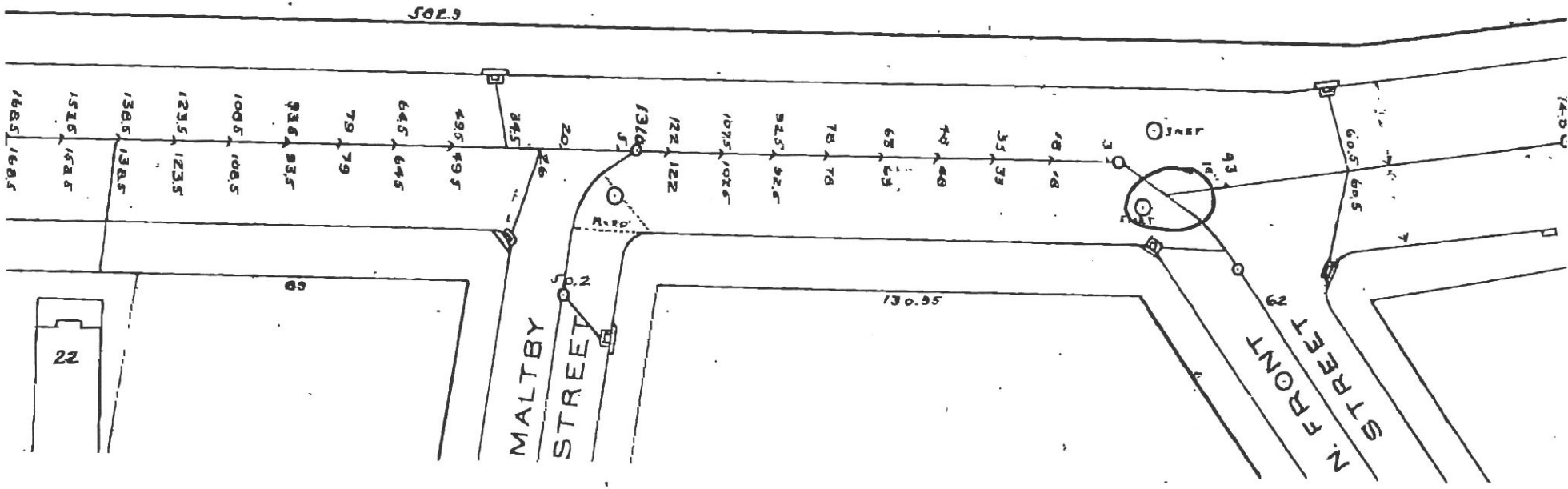

OVERFLOW PIPE

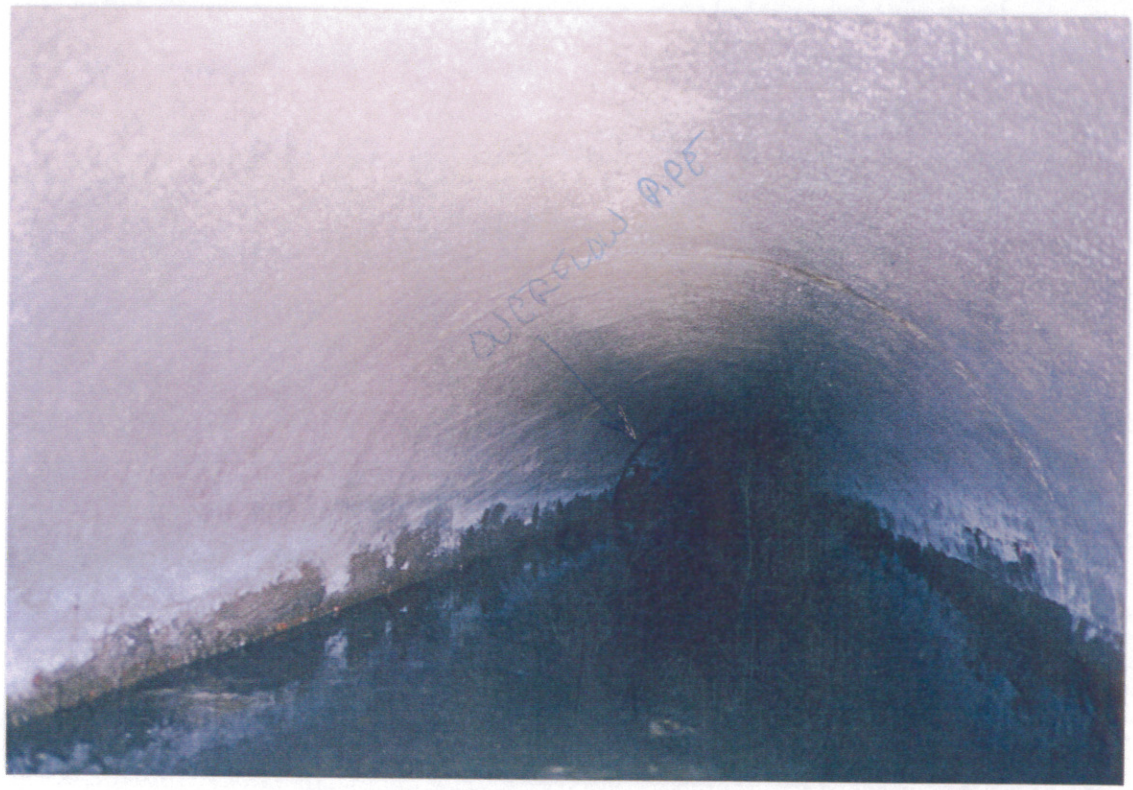
OVERFLOW PIPE