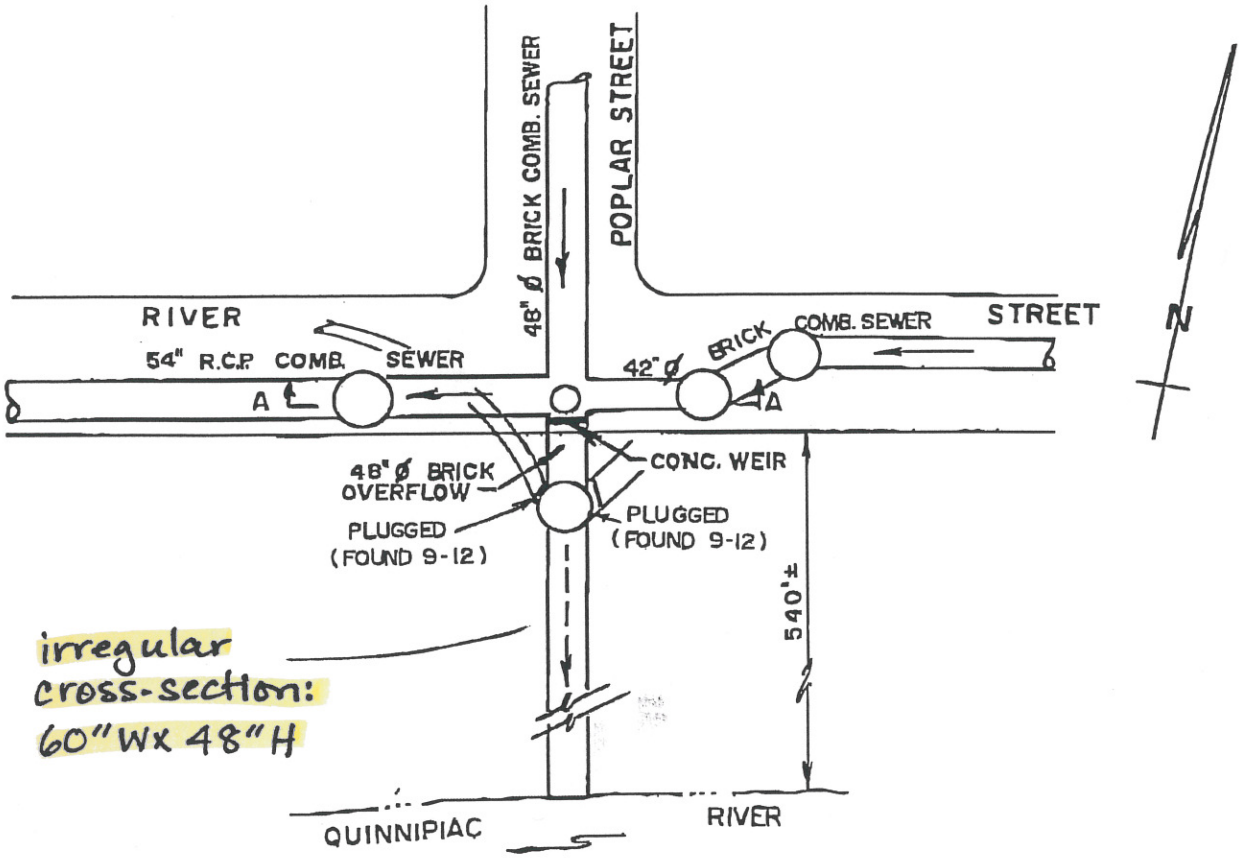

PLAN
N. T. S.

NOTE: 80° F/DRY @ 11:00 AM
FLOW DEPTH 2.4 FT.
RAIN — 0.61", 24 HRS. TO 5:00 PM
FLOW DEPTH @ 3:45 PM 3.3FT

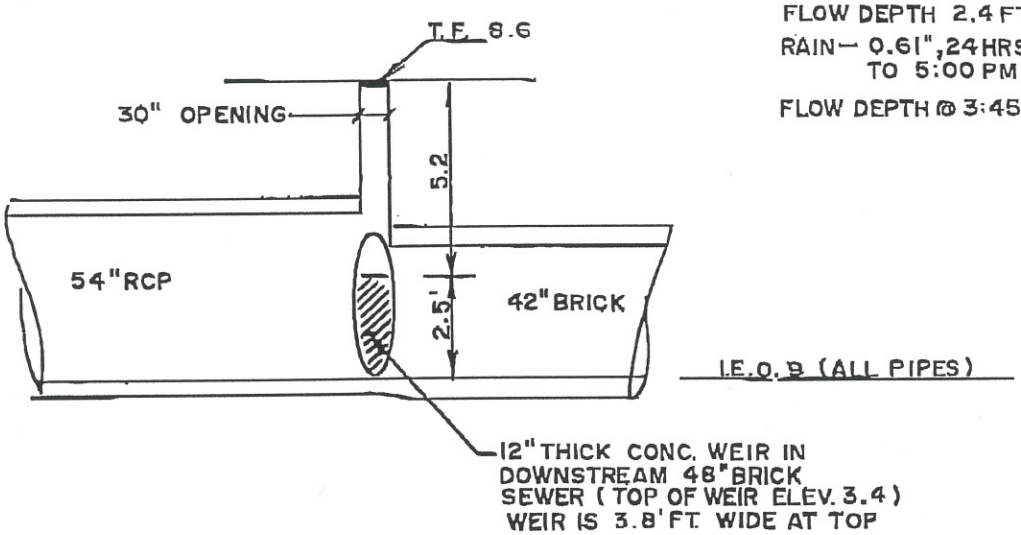

LEGEND
WET WEATHER FLOW
DRY WEATHER FLOW

SECTION A-A
N. T. S.

OVERFLOW NO. OS-5/016
POPLAR ST. @ RIVER ST.
NEW HAVEN, CONNECTICUT

DATE: 7-7-97
REV. 6-2-98
JOB NO. 1146
SHT. NO. 1

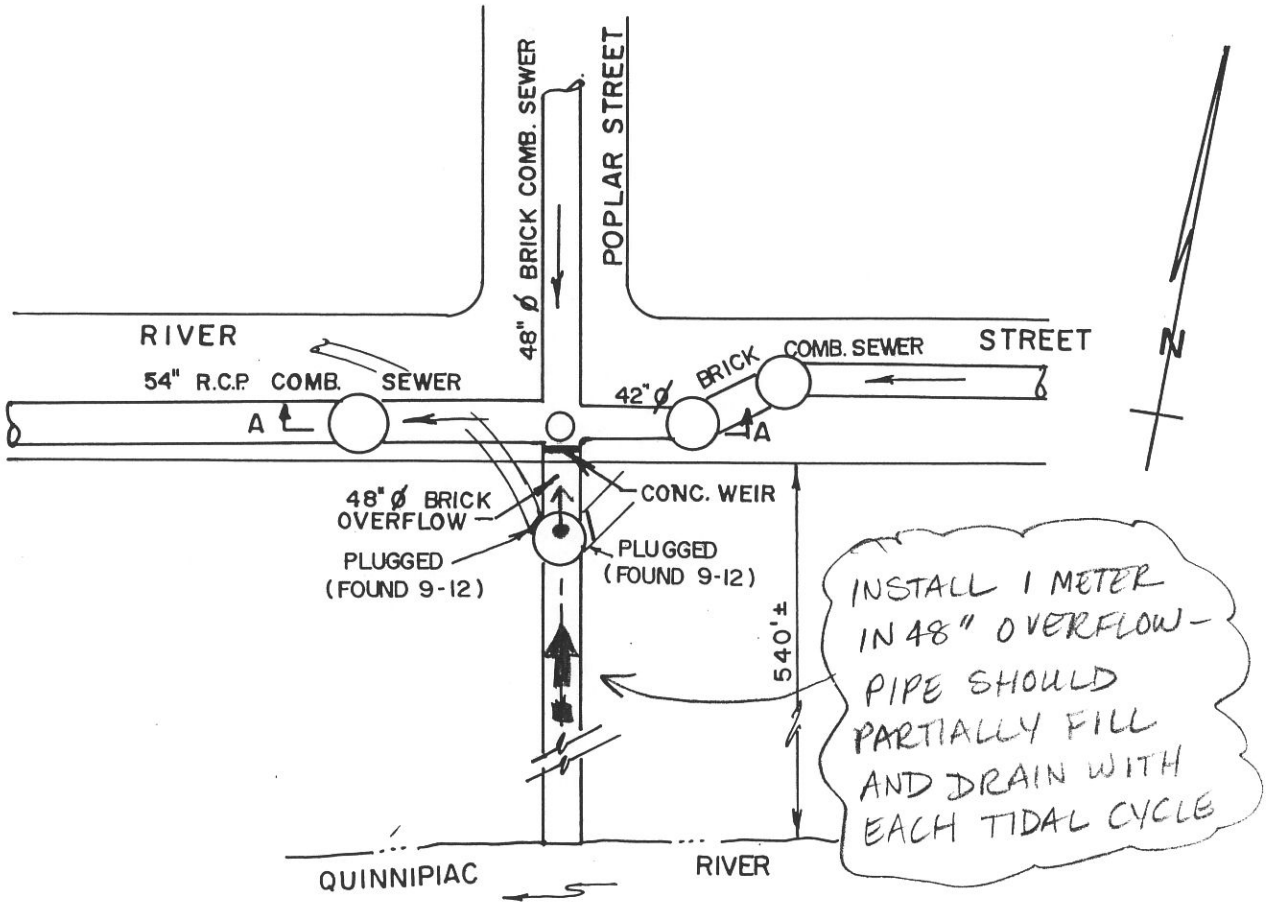

PLAN

N. T. S.

NOTE: 80° F/DRY @ 11:00 AM
FLOW DEPTH 2.4 FT.
RAIN – 0.61", 24 HRS. TO 5:00 PM
FLOW DEPTH @ 3:45 PM 3.3FT

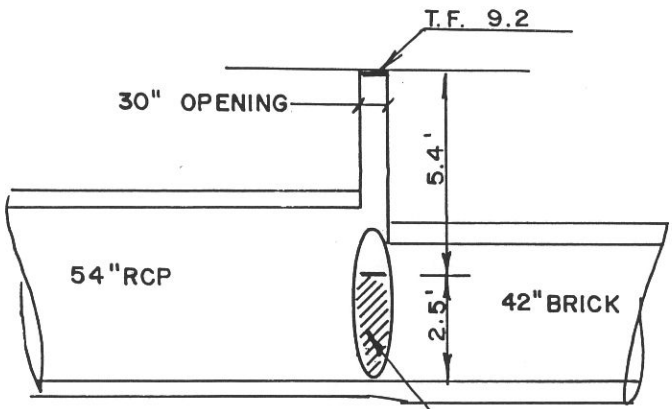

I.E. 1.3 (ALL PIPES)

12" THICK CONC. WEIR IN DOWNSTREAM 48" BRICK SEWER (TOP OF WEIR ELEV. 3.8)
1 WEIR IS 3.8' FT. WIDE AT TOP

LEGEND

WET WEATHER FLOW
DRY WEATHER FLOW

SECTION A-A

N. T. S.

OVERFLOW NO. OS-5/016
POPLAR ST. @ RIVER ST.
NEW HAVEN, CONNECTICUT

DATE: 7-7-97
1 REV. 7-18-97
JOB NO. 1146
SHT. NO. 1

ADS Environmental Services, Inc.

3600 Site Report

Town: Map 55	Manhole #:	AN Map: M-16
RC Zone: K-22	Bat Serial #:	Monitor #:
Velocity:	Lif Diameter:	Diameter: 48" x 60"

Project/Phase: New Haven, CT CSO Date: 8/27/97 Name: MW

Address/Location: Poplar ST and River ST

Phone Co. Address:

Access: Drive

Phone Number:

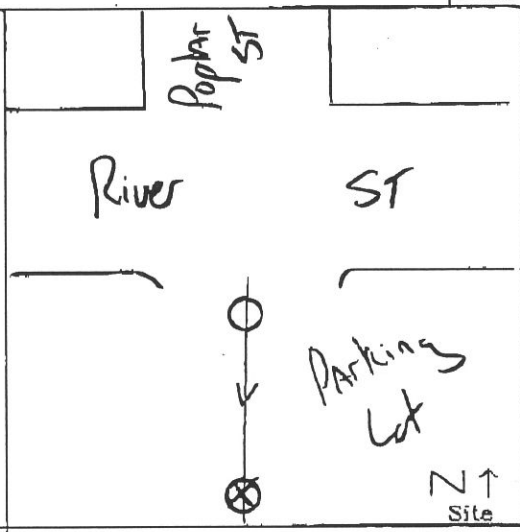

Special Installation → ultra, velocity and pressure u/s of m/h

SAFETY

Manhole Depth: 10FT

Traffic: Neg

Gas & Investigation: Neg

Manhole Condition: Good

Frame: Regular/Irregular

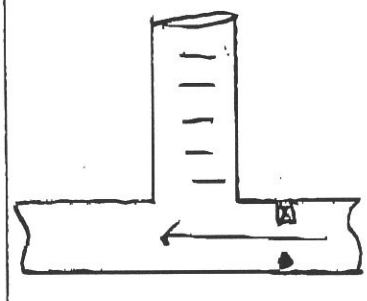

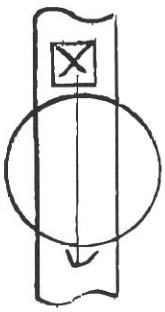

Q.C. Inspector:

Date:

Comments:

COMMS

Pipe Type: Brick

BACKUP	Y	N	?	Distance
Trunk Reg				
Lift Sta.				
STP				
Other Input				
Ind U/S				
C/S U/S				

General Condition overflows, bypasses, weirs, special information, monitor characteristics, surcharge
- Please make a precise drawing if odd-shaped pipe or special installation

Hydraulics: No flow during investigation

Approval:

Access Point:

Distance from M/H:

Road Cut Length:

Trench Length:

R.O.W. #:

Surcharge: Neg SC Height: HEIGHT

Inv.: DOF: .5 +/- .25 Time: Vol: fps Silt:

- Tidal influenced pipe.

Upstream Manhole: Too close to weir spill over/Poor hydraulics during wet weather

Downstream Manhole: Did Not Investigate

Mini System Character: Residential/Commercial/Industrial/Vacant