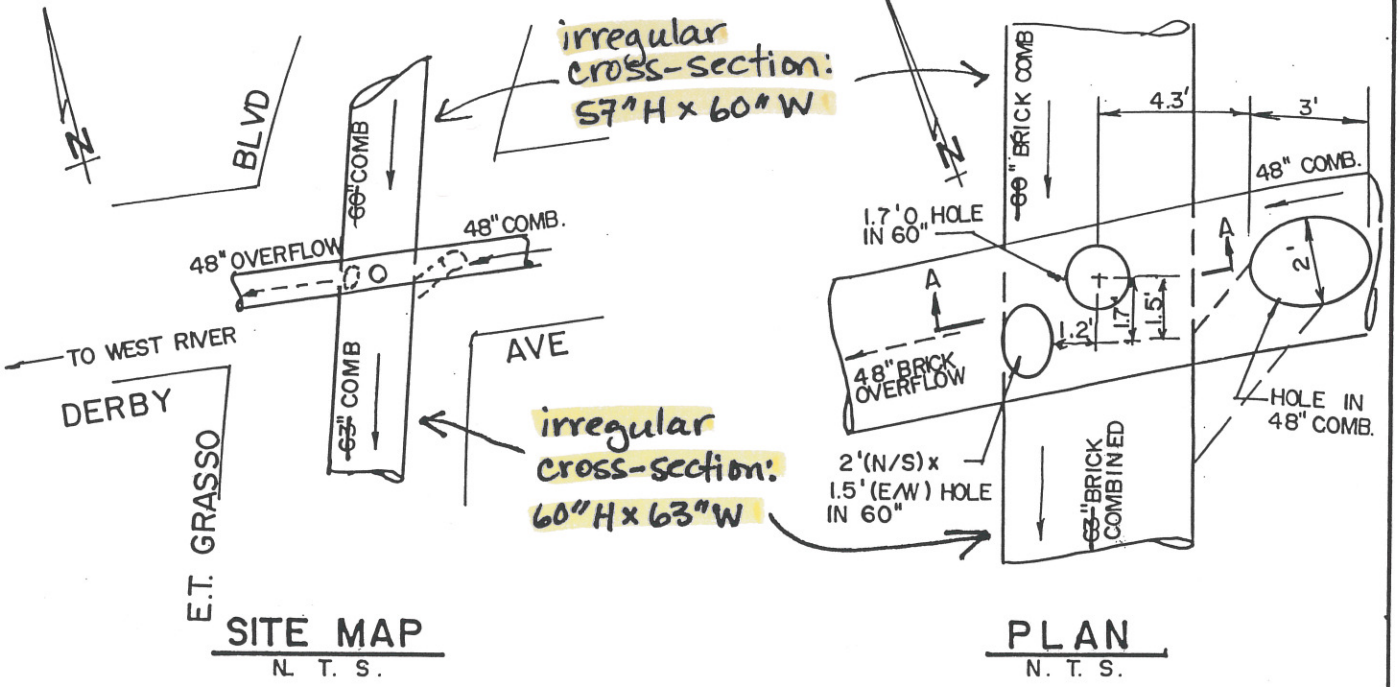

NOTE: 72°F/DRY @ 10:00 AM
FLOW DEPTH 1.6' FT IN 60"

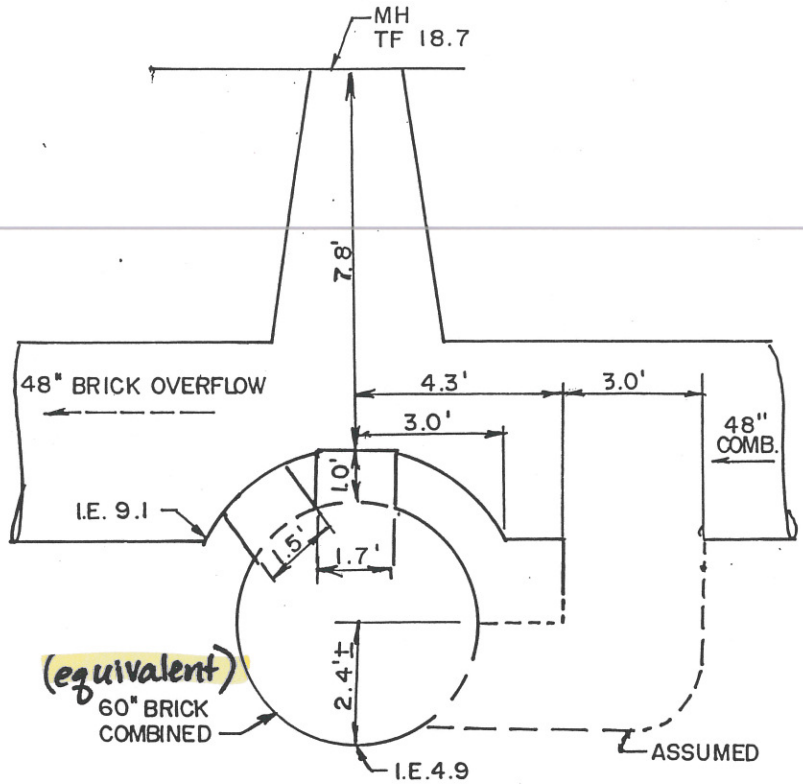

SECTION "A-A"
N. T. S.

LEGEND

WET WEATHER FLOW

DRY WEATHER FLOW

OVERFLOW NO. OB-1/005
E.T. GRASSO BLVD @ DERBY AVENUE
NEW HAVEN, CONNECTICUT

DATE: 8-20-97

JOB NO. 1146

SHT. NO. 23

ADS Environmental Services, Inc.

3600 Site Report

Town: Map 54	Manhole #	AN #: M-5A
RG Zone: H-21	Bat Serial #	Monitor #
Velocity: 3	Lif Diameter	Diameter: 47" x 50.25"

Project/Phase: New Haven, CT CSO Date: 8/27/97 Name: MPN

Address/Location: Derby Ave @ ET Grasso Blvd.

Phone Co. Address:

Access: Drive

Phone Number:

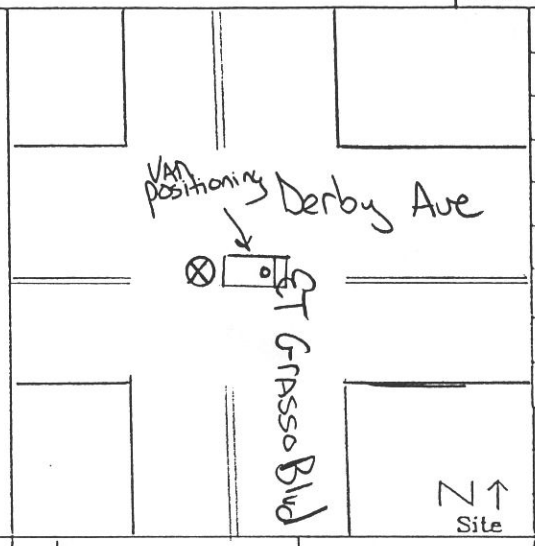

Special Install; ultra, velocity, and pressure installed 5 FT u/s of drop

SAFETY

Manhole Depth: 12 FT

Traffic: Heavy

Gas & Investigation: Neg.

Manhole Condition: Good.

Frame: Regular/Irregular

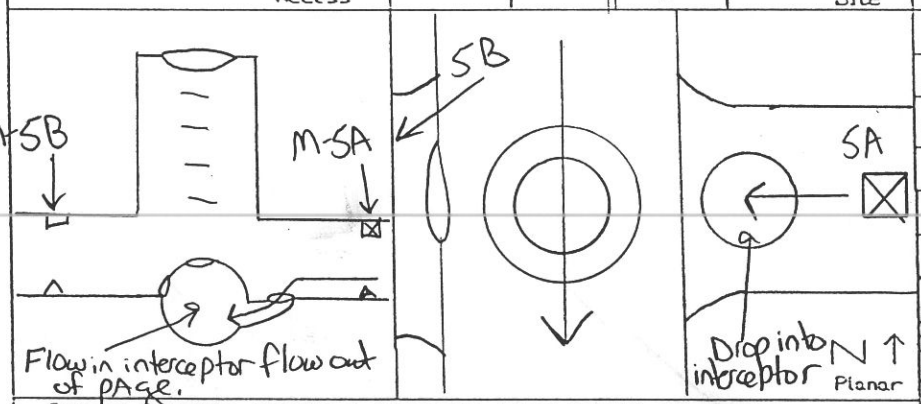

Q.C. Inspector:

Date:

Comments:

COMM2

Pipe Type: Brick

BACKUP	Y	N	?	Distance
Trunk Reg				
Lift Sta.				
STP				
Other Input				
Ind U/S				
C/S U/S				

General Condition, overflows, bypasses, weirs, special information, monitor characteristics, surcharge

* Please make a precise drawing if odd-shaped pipe or special installation.

Hydraulics: Fast flow;

Approval:

Access Polef:

Distance from M/H:

Road Cut Length:

Trench Length:

Surcharge: Neg SC Height: HEIGHT —

Inv.: DOF: 6.0' +/- .25" Time: 1045 Vel: 3.0" fps Silt: 0

R.O.W. #:

- Same manhole as M-5B
- Good 1500 monitorable site
- Van can only be positioned as seen above due to heavy traffic.

Upstream Manhole Did not Investigate

Downstream Manhole Does not isolate flow before interceptor

Mini System Character: Residential/Commercial/Industrial/Vacant

ADS Environmental Services, Inc.

3600 Site Report

Town: Map 54	Manhole #:	AN #: M-5B
RC Zone: H-21	Bat Serial #:	Monitor #:
Velocity:	Lif Diameter:	Diameter: 48" x 49"
Phone Number:		

Project/Phase: New Haven, CT CSO Date: 8/27/97 Name: MN

Address/Location: Derby Ave @ ET Grasso Blvd.

Phone Co. Address:

Access: Drive

Special Installation w/ ultra, pressure and velocity installed 15 FT Downstream.

Same as 5A

SAFETY

Manhole Depth: 17 FT

Traffic: Heavy

Gas & Investigation: Neg

Manhole Condition: Good

Frame: Regular/Irregular

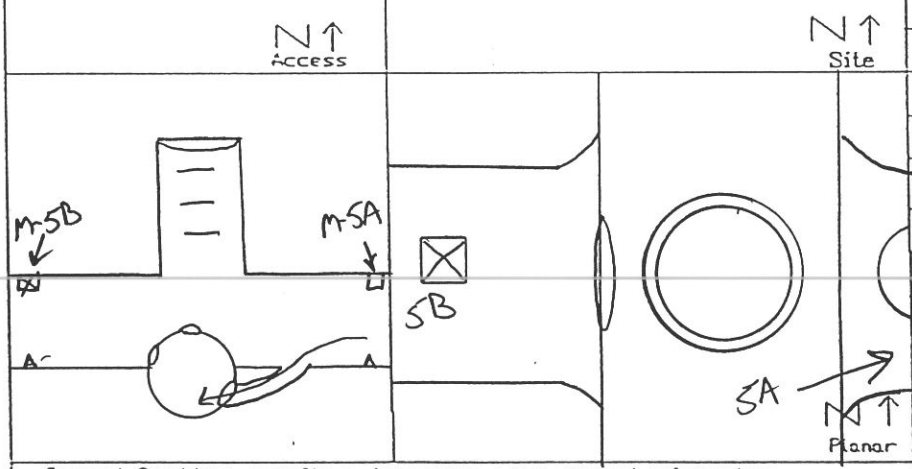

Q.C. Inspector:

Date:

Comments:

COMM2

Pipe Type:

BACKUP	Y	N	?	Distance
Trunk Reg				
Lift Sta.				
STP				
Other Input				
Ind U/S				
C/S U/S				

General Condition, overflows, bypasses, weirs, special information, monitor characteristics, surcharge

* Please make a precise drawing if odd-shaped pipe or special installation.

Hydraulics: No flow @ time of investigation

Approval:

Access Poles:

Distance from M/H:

Road Cut Length:

Trench Length:

R.O.W. #:

Surcharge: Non SC Height: HEIGHT —

Inv.: DOF: — +/- , Time: — Vol: — fps Silt: —

Upstream Manhole Does not Isolate

Downstream Manhole Outfall

Mini System Character: Residential/Commercial/Industrial/Vacant

- Same manhole as M-5A
- Good 1500 monitorable site
- Install as far down the outfall as possible.

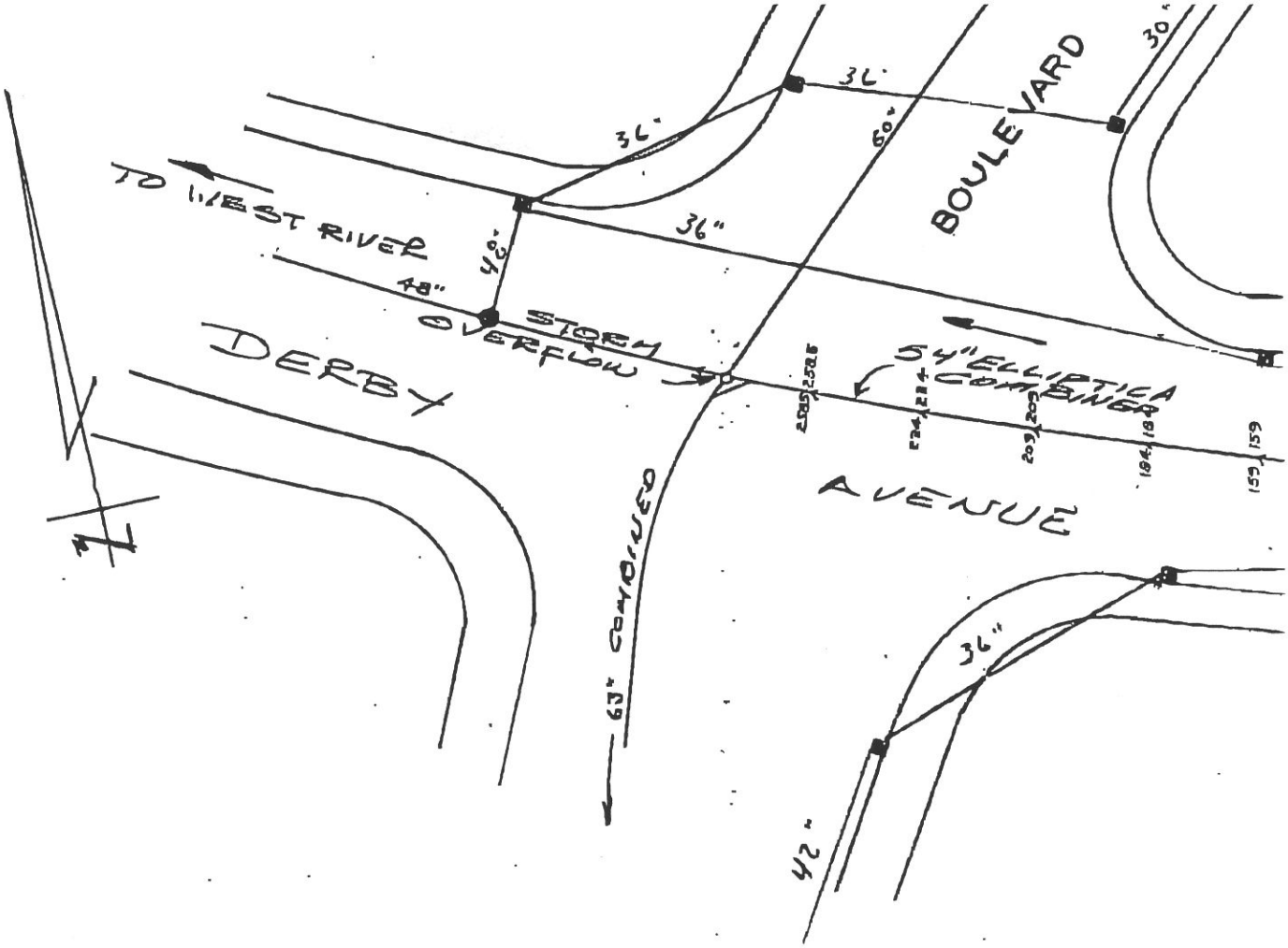
TO WEST RIVER
36"
36"
60"
BOULEVARD
30"
36"
40"
48"
STORM OVERFLOW
54" ELLIPTICAL COMBINED
DERBY
AVENUE
63" COMBINED
36"
42"
N

NODE 005

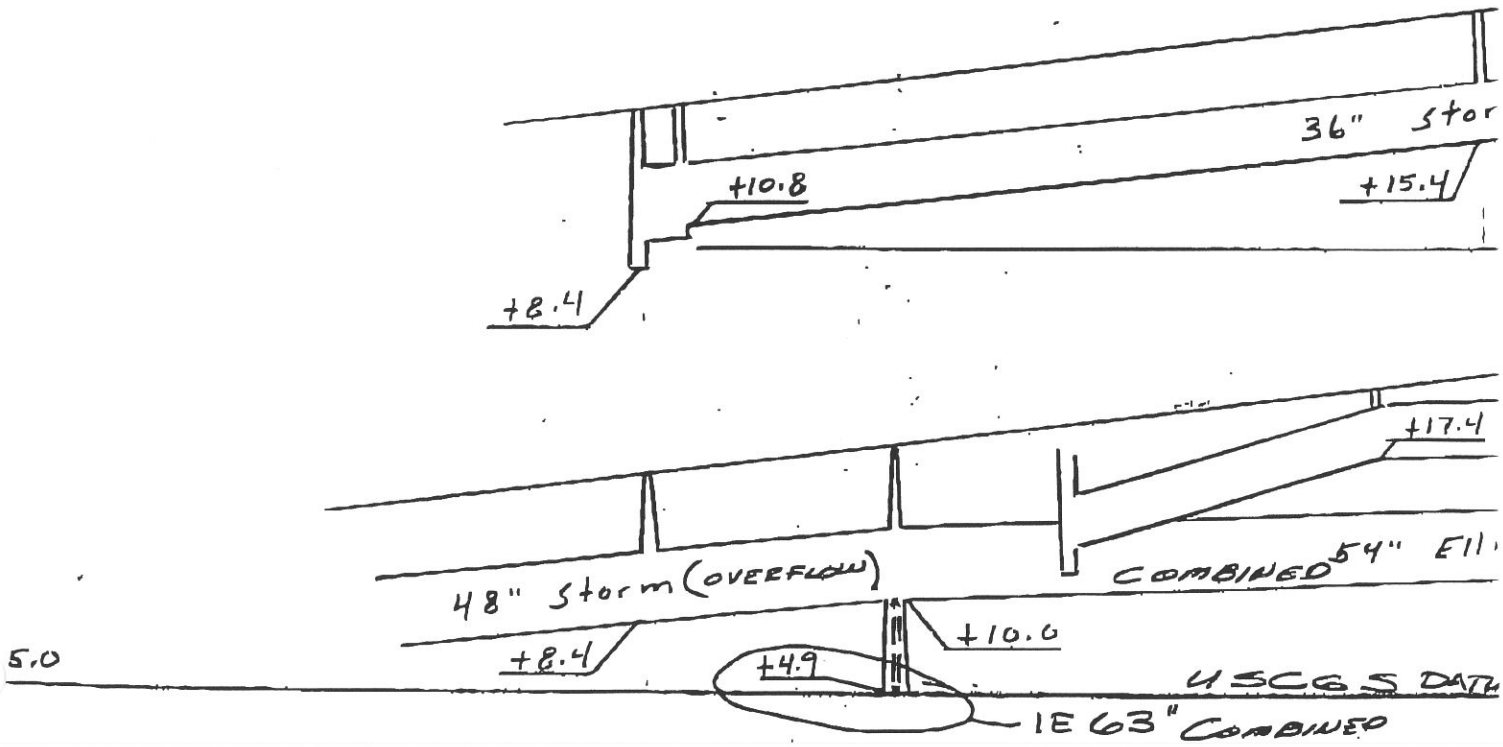
36" stor
+10.8
+15.4
+8.4
+17.4
48" Storm (OVERFLOW)
COMBINED 54" Ell
+10.6
+8.4
+4.9
5.0
USCGS DATU
IE 63" COMBINED

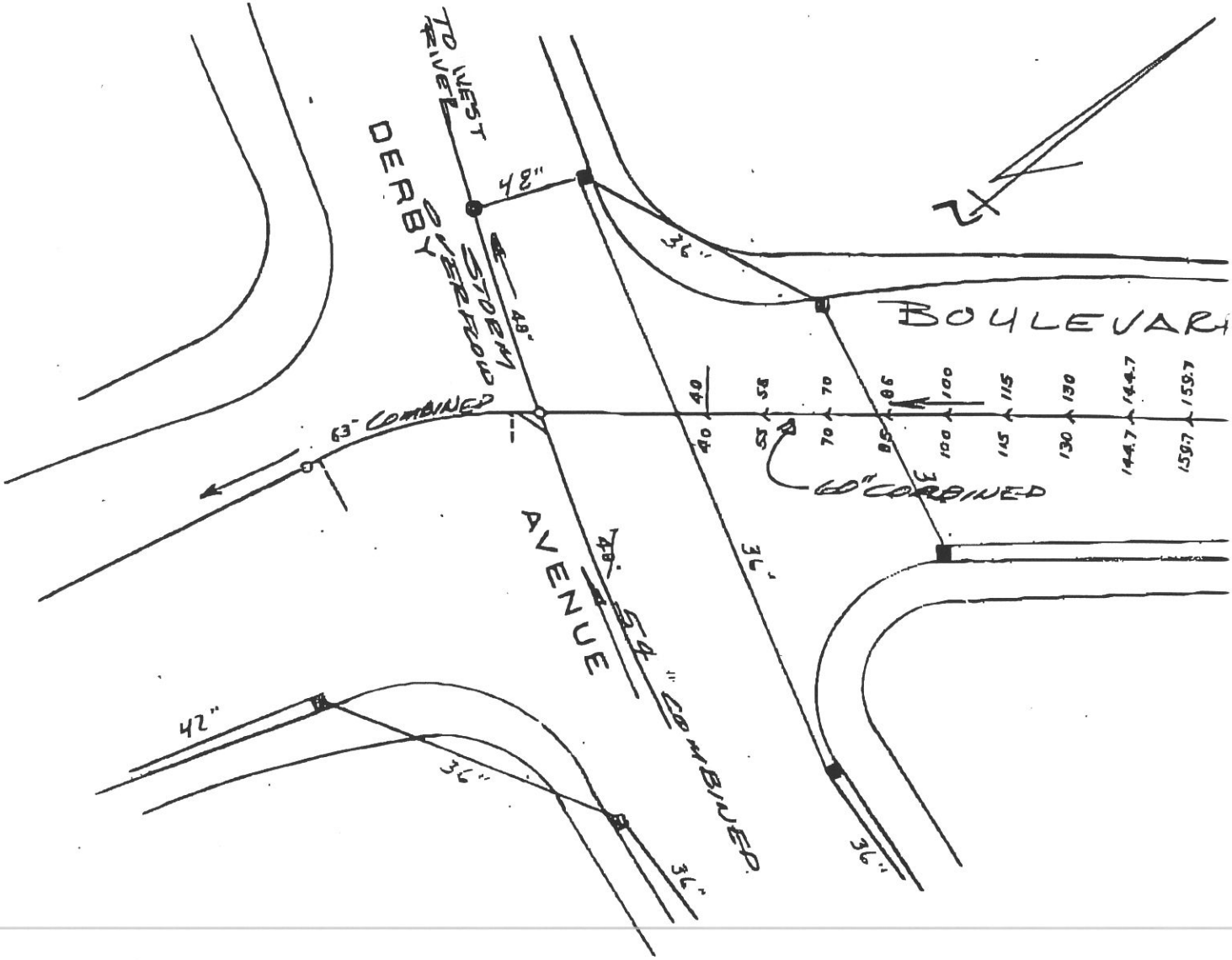

NODE 005

STORM SEWER ELEVS ARE SHOWN ON CGS DATUM

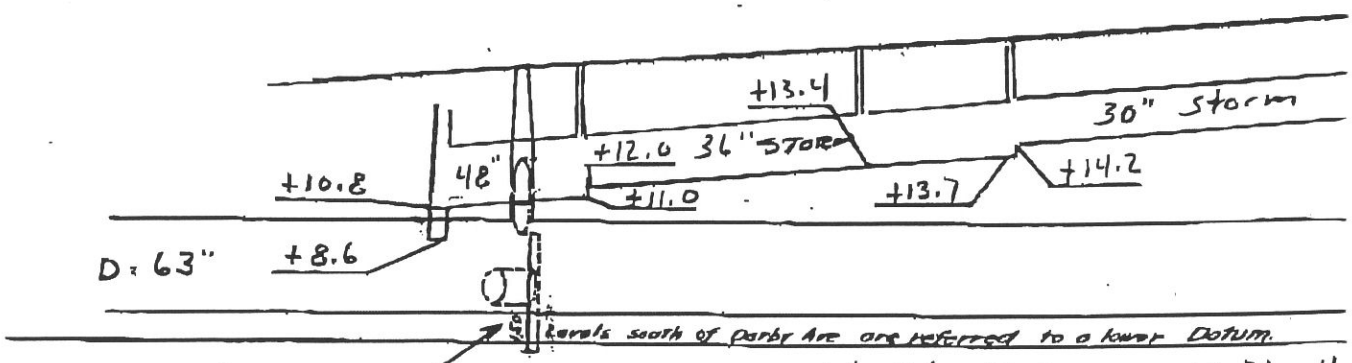

63" 1.50
+3.31
4.81 (4.9 ON DERBY – OK)