Notes #004

SEEMS TO BE DATUM ISSUE BETWEEN '97 AND '98 PLANS. SPOKE W/ PERRIN NIEMANN OF CH2M HILL ON 6/11/02 AND SHE BELIEVES '98 IS CORRECT (ALSO IN GIS W/ '98 DATA)

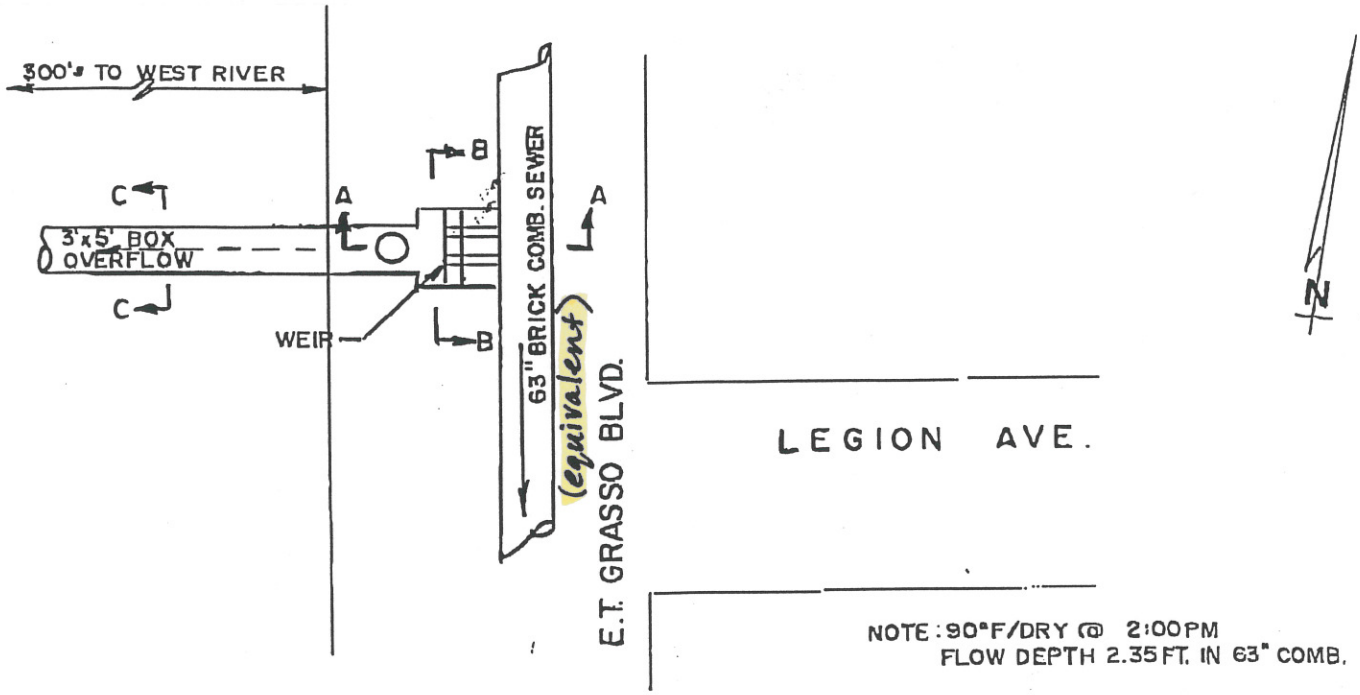

PLAN
N. T. S.

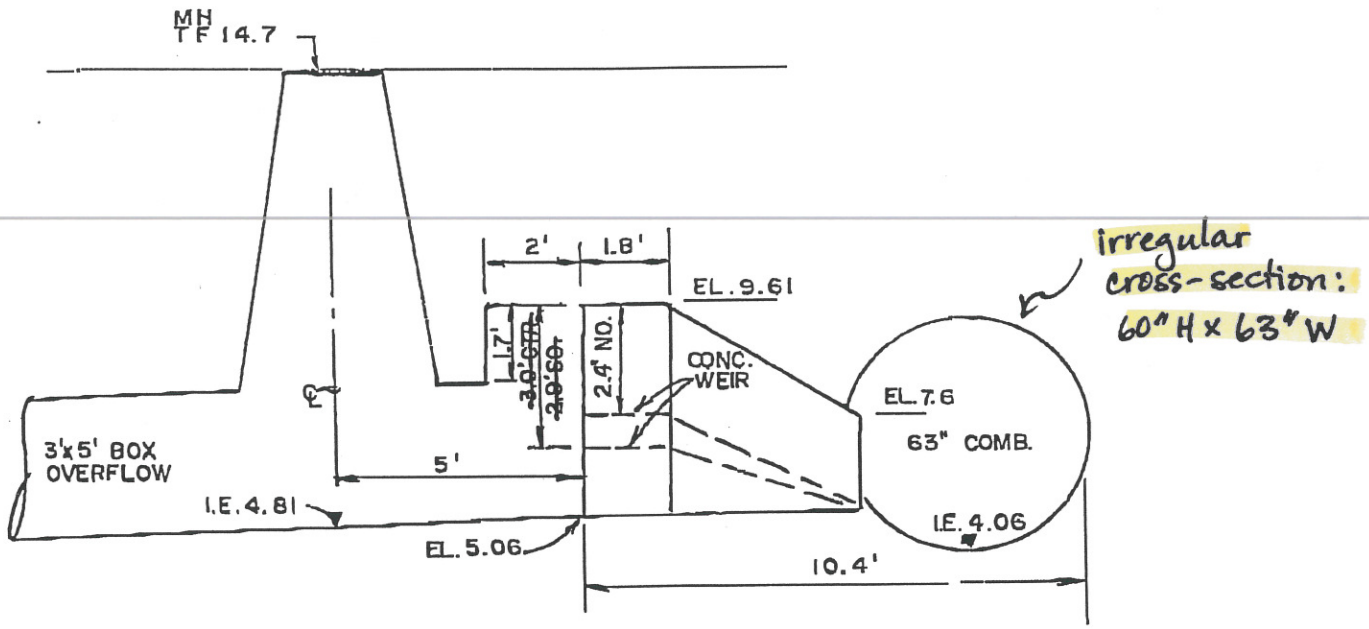

SECTION A-A
N. T. S.

LEGEND

WET WEATHER FLOW

DRY WEATHER FLOW

OVERFLOW NO. OB5/004
E.T. GRASSO BLVD. @ LEGION AVE.
NEW HAVEN, CONNECTICUT

DATE: 7-17-97
REV 6-29-98
JOB NO. 1146
SHT. NO. 18-1

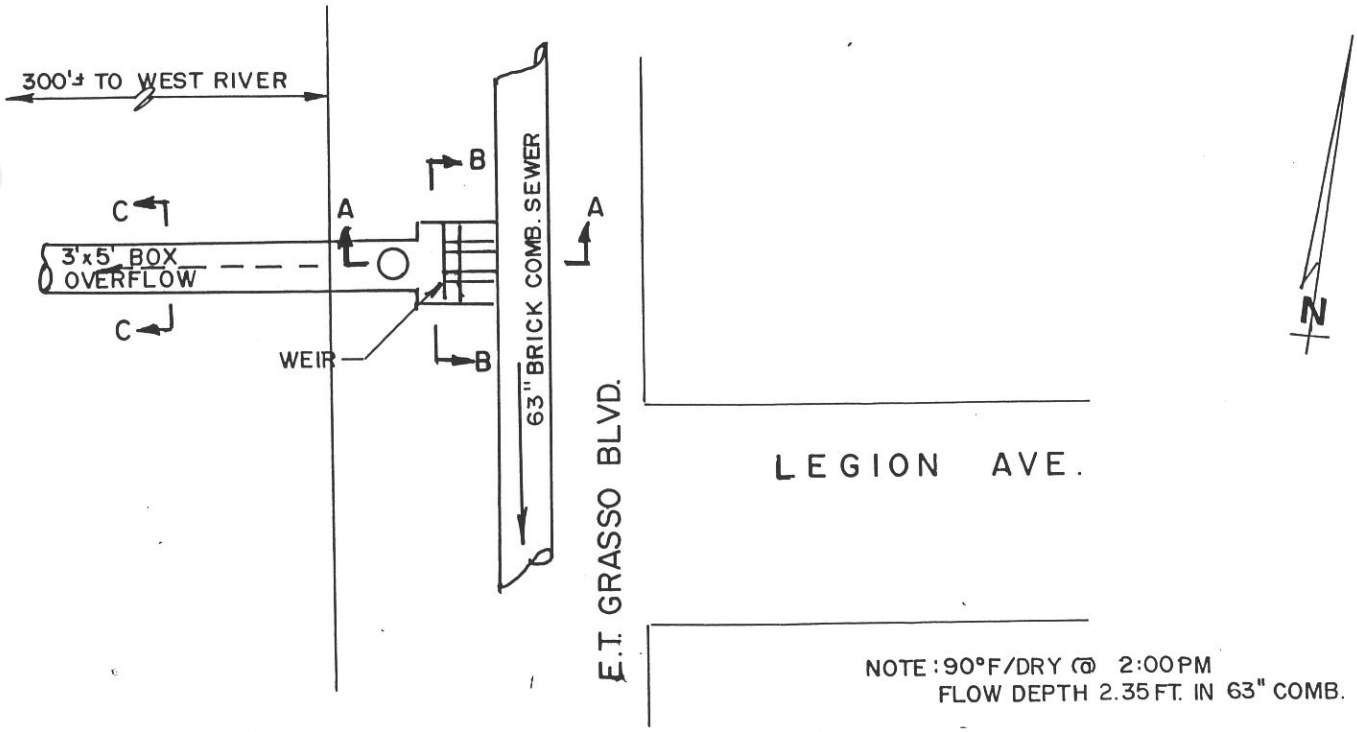

PLAN

N. T. S.

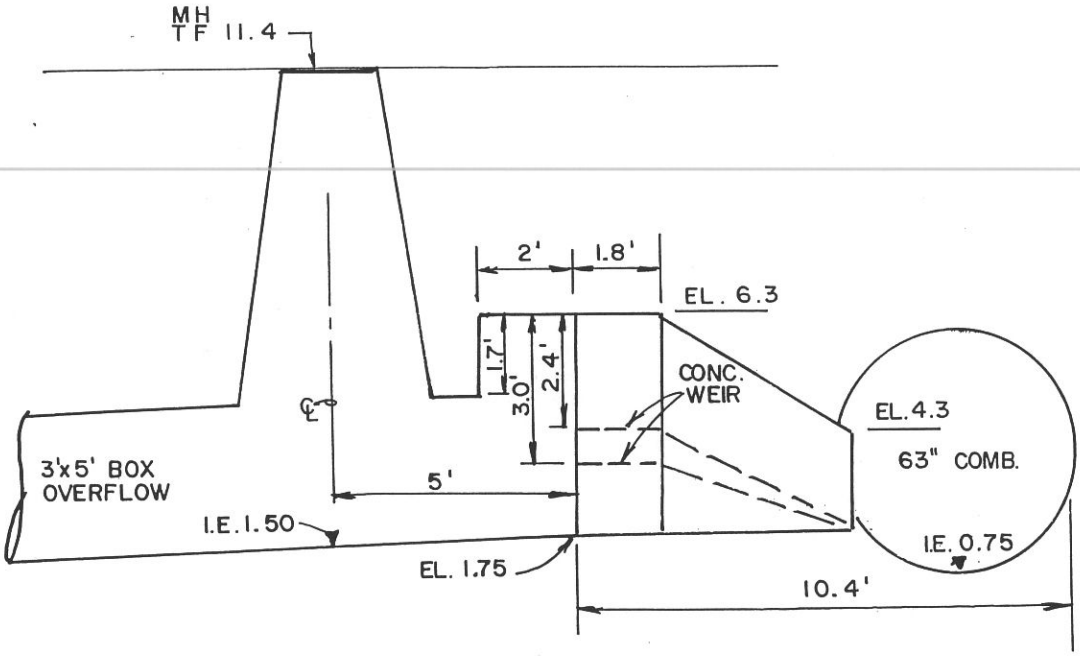

SECTION A-A

N. T. S.

LEGEND

WET WEATHER FLOW

DRY WEATHER FLOW

OVERFLOW NO. OB 5/004
E.T. GRASSO BLVD. @ LEGION AVE.
NEW HAVEN, CONNECTICUT

DATE: 7-17-97
REV 9-15-97

JOB NO. 1146

SHT. NO. 18-1

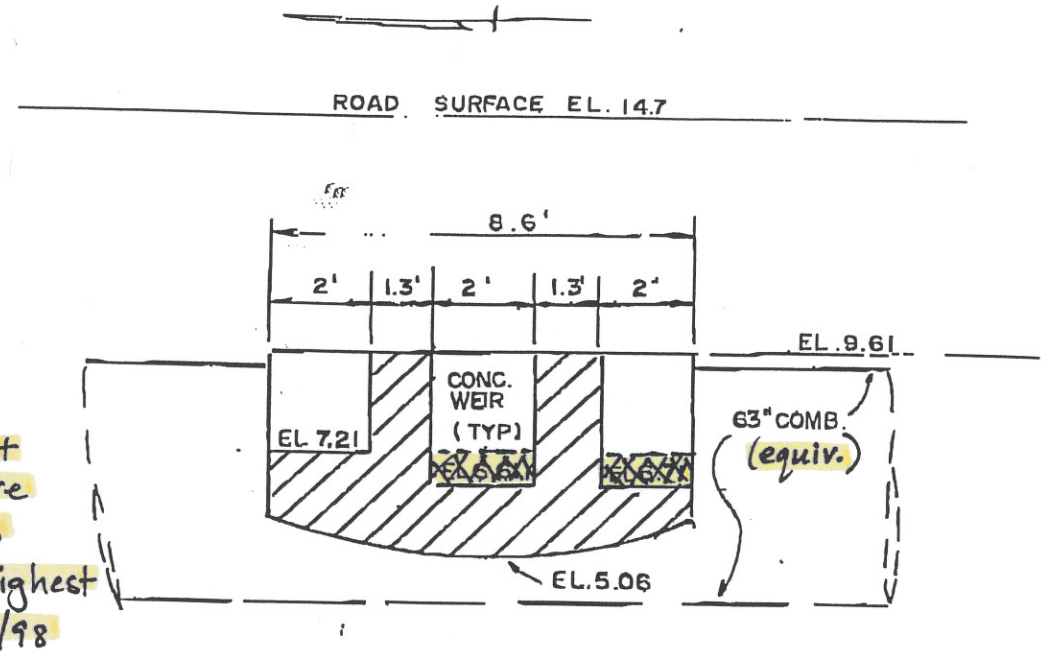

Two lowest weirs were raised to level of highest weir 3/24/98

SECTION B-B

N. T. S.

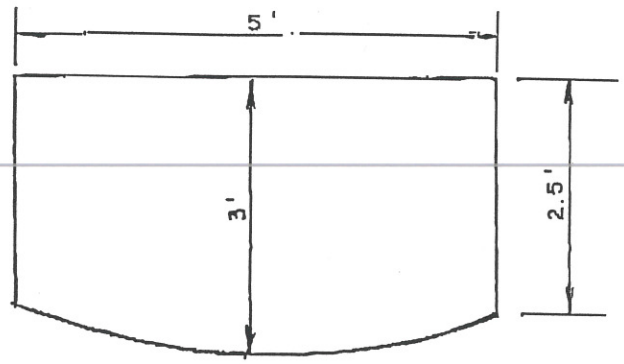

BOX CULVERT OVERFLOW

SECTION C-C

N.T.S.

LEGEND

WET WEATHER FLOW

DRY WEATHER FLOW

OVERFLOW NO. OB 5/004
E. T. GRASSO BLVD @ LEGION AVE.
NEW HAVEN, CONNECTICUT

DATE: 7-17-97
REV. 6-29-98
JOB NO. 1146
SHT. NO. 18—2

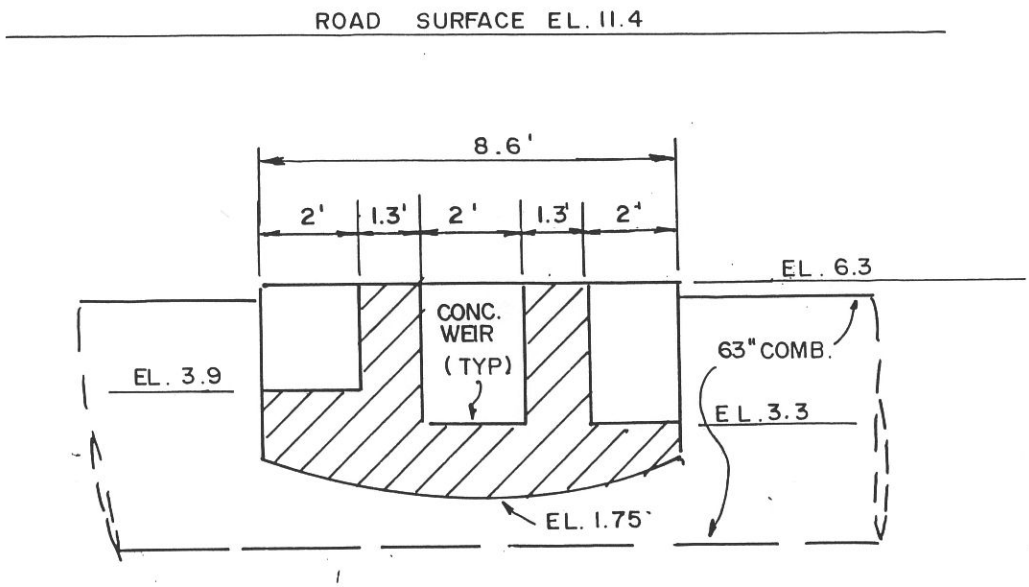

SECTION B-B

N. T. S.

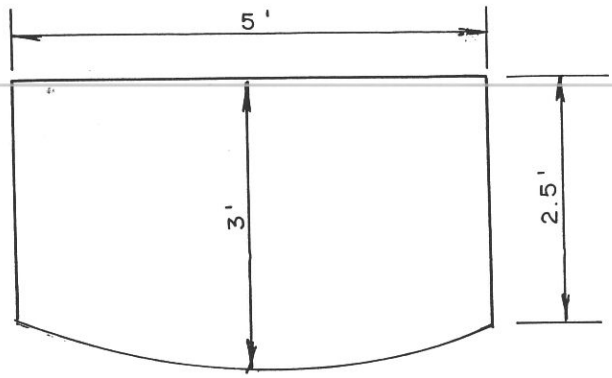

BOX CULVERT OVERFLOW

SECTION C-C

N.T.S.

LEGEND

WET WEATHER FLOW

DRY WEATHER FLOW

OVERFLOW NO. OB 5/004
E.T. GRASSO BLVD @ LEGION AVE.
NEW HAVEN, CONNECTICUT

DATE: 7-17-97
REV. 9-15-97
JOB NO. 1146
SHT. NO. 18—2

ADS Environmental Services, Inc.

3600 Site Report

Town:	Manhole #:	AN:
New Haven		M4
RG Zone	Bat Serial #	Monitor #
Velocity	Lif Diameter	Diameter

Project/Phase: New Haven CSO Date: 9/2/97 Name: MA

Address/Location: Legion Ave and ST GRASSO Blvd

Phone Co. Address:

Access: Drive

Phone Number:

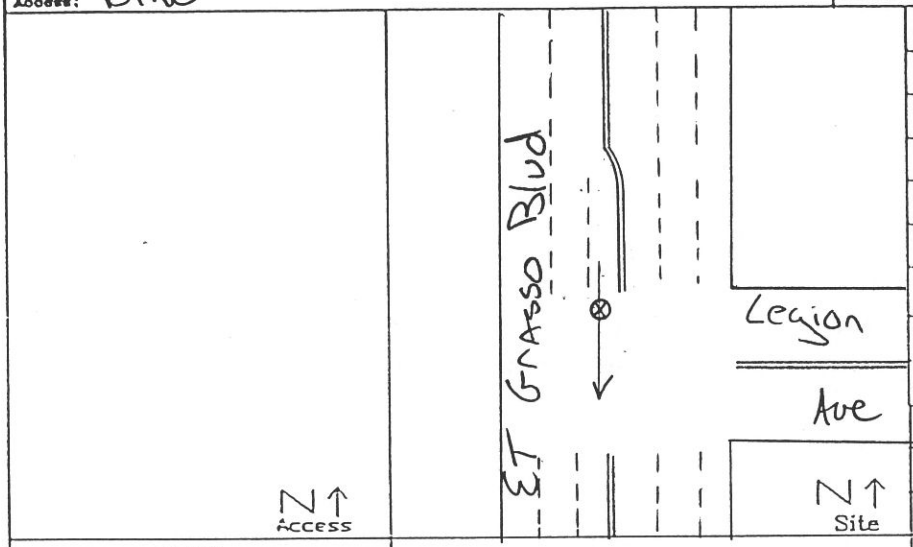

Special Installation ⇒ ultra velocity and pressure installed upstream!

SAFETY

Manhole Depth: 10FT

Traffic: Heavy

Gas & Investigation: New

Manhole Condition: Good

Frame: Regular/Irregular

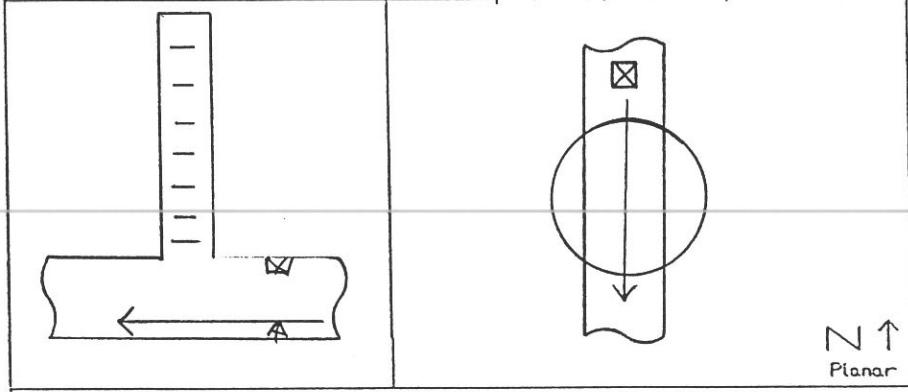

Q.C. Inspector:

Date:

Comments:

COMM?

Pipe Type: Brick

BACKUP	Y	N	?	Distance
Trunk Reg				
Lift Sta.				
STP				
Other Input				
Ind U/S				
C/S U/S				

General Condition, overflows, bypasses, weirs, special information, monitor characteristics, surcharge

* Please make a precise drawing if odd-shaped pipe or special installation.

Hydraulics: Deep, Smooth Flow

Approval:

Access Poles:

Distance from M/H:

Road Cut Length:

Trench Length:

R.O.W. #:

Surcharge: SC Height: HEIGHT

Inv.: DOP: +/- Time: Vel: fps Silt:

Upstream Manhole Good Site

Downstream Manhole Good Site

- TOPside investigation done - No measurements taken.

Mini System Character: Residential/Commercial/Industrial/Vacant