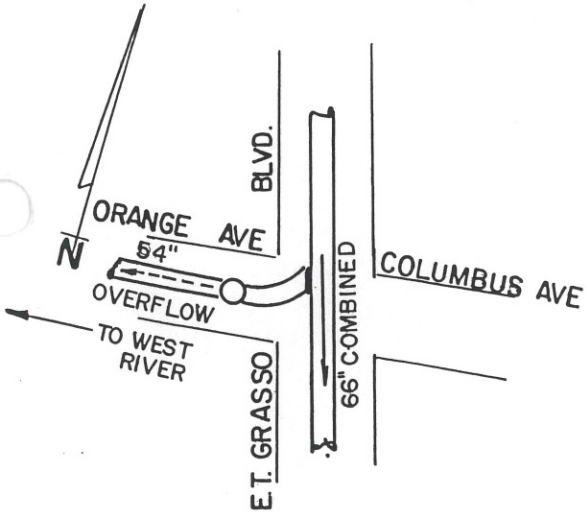

SITE MAP
N. T. S.

NOTE: 80° F / DRY @ 2:00 PM
FLOW DEPTH 3' FT IN 66"

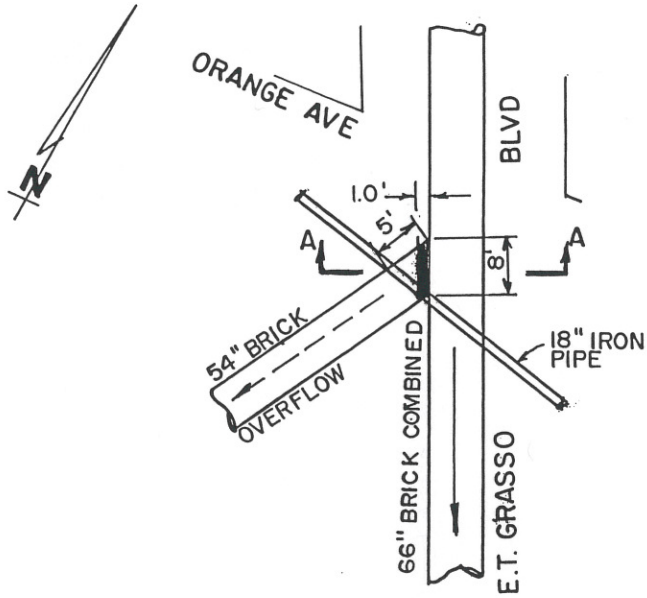

PLAN
N. T. S.

ROAD GRADE 12.0±

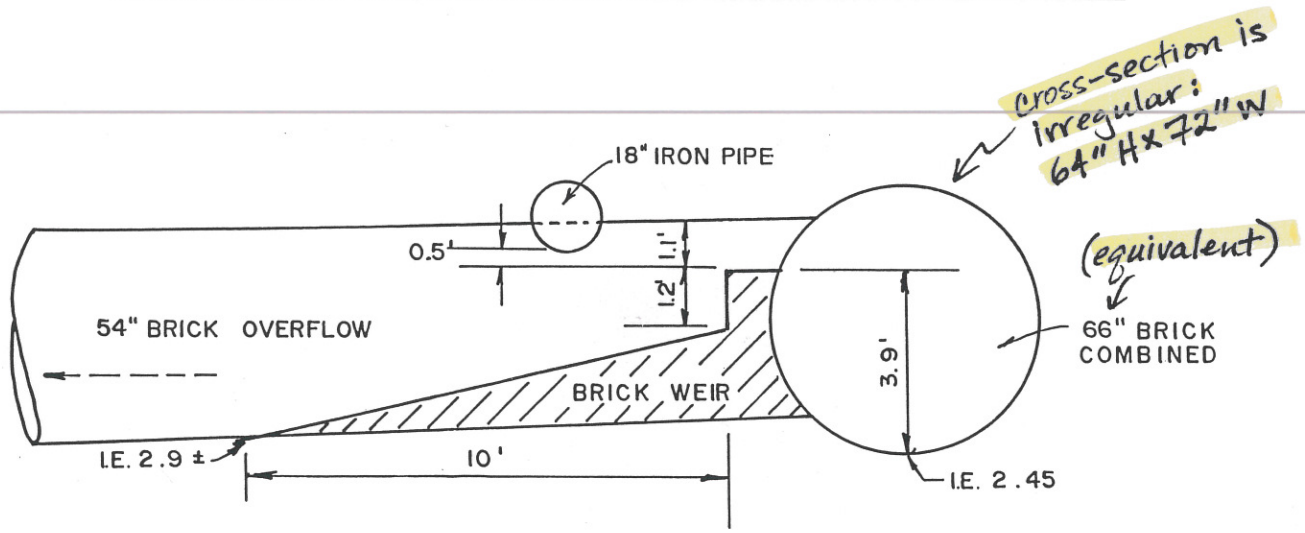

SECTION "A-A"
N. T. S.

LEGEND
WET WEATHER FLOW
DRY WEATHER FLOW

OVERFLOW NO. OB4/003
E.T. GRASSO BLVD @ ORANGE AVE
NEW HAVEN, CONNECTICUT

DATE: 7-30-97
JOB NO. 1146
SHT. NO. 21

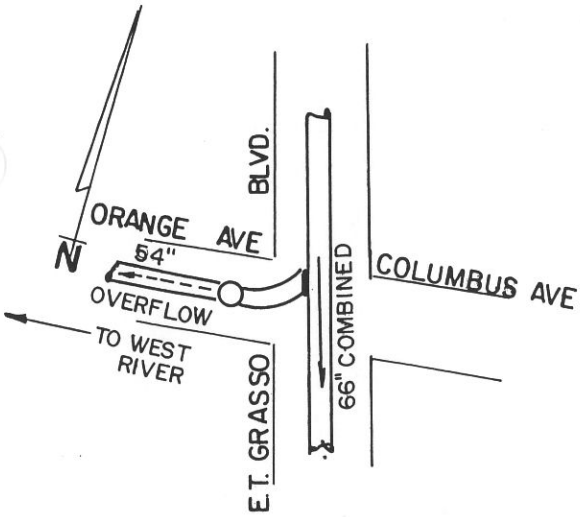

SITE MAP
N. T. S.

NOTE: 80° F / DRY @ 2:00 PM
FLOW DEPTH 3' FT IN 66"

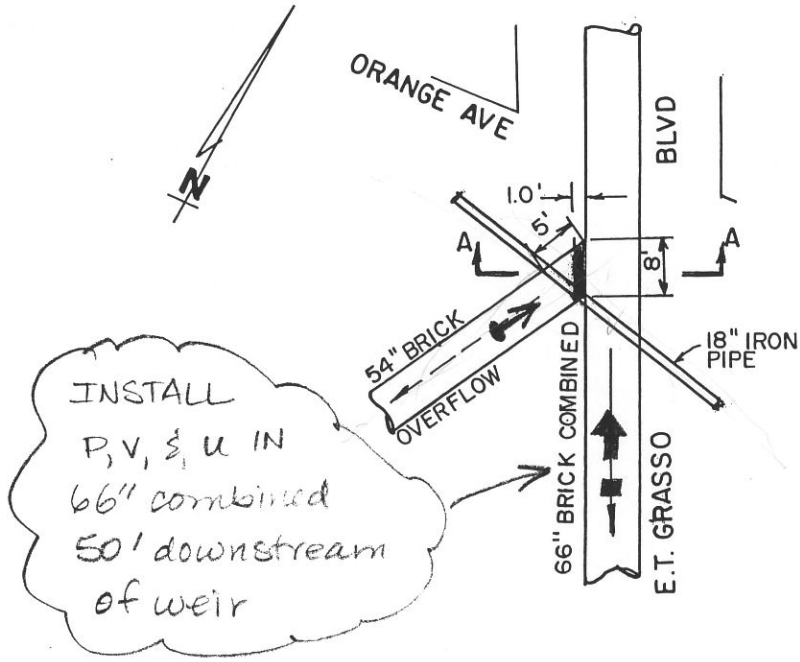

PLAN
N. T. S.

ROAD GRADE 12.0±

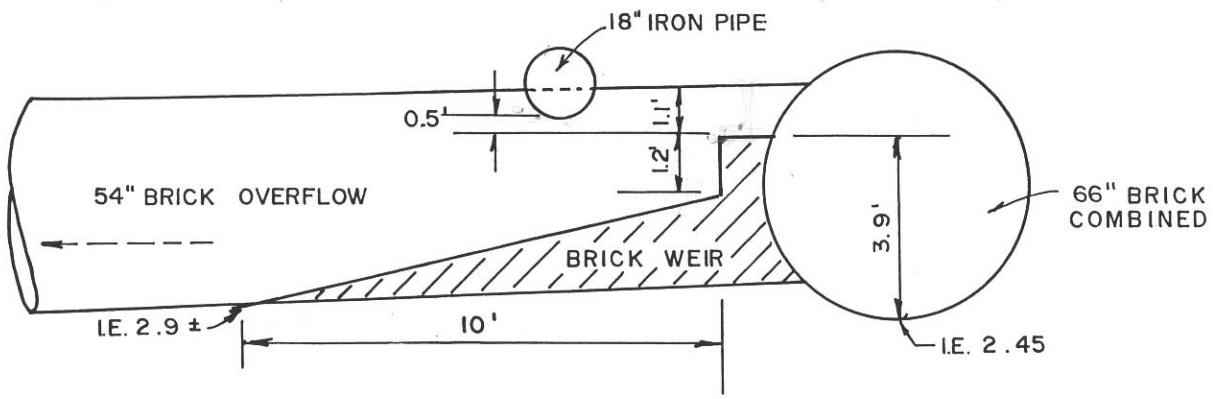

SECTION "A-A"
N. T. S.

LEGEND
WET WEATHER FLOW
DRY WEATHER FLOW

OVERFLOW NO. OB4/003
E. T. GRASSO BLVD @ ORANGE AVE
NEW HAVEN, CONNECTICUT

DATE: 7-30-97
JOB NO. 1146
SHT. NO. 21

ADS Environmental Services, Inc.

3600 Site Report

Town: New Haven	Manhole #:	AN: M-3
RG Zone	Bat Serial #	Monitor #
Velocity	Lif Diameter	Diameter

Project/Phase: New Haven CSO Date: 9/2/97 Name: MW

Address/Location: Orange Ave and ET Grasso Blvd.

Phone Co. Address:

Access: Drive

Phone Number:

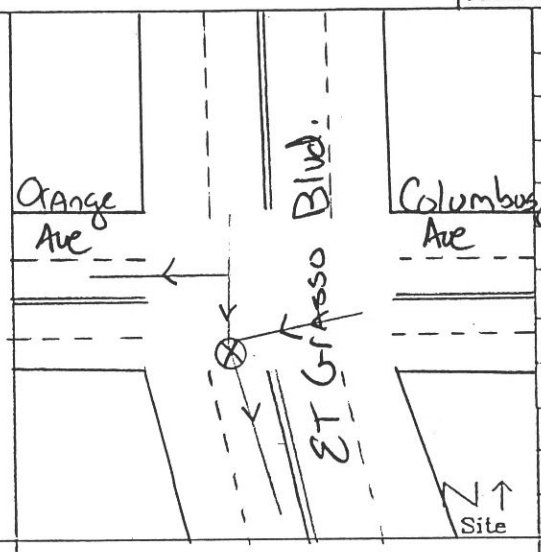

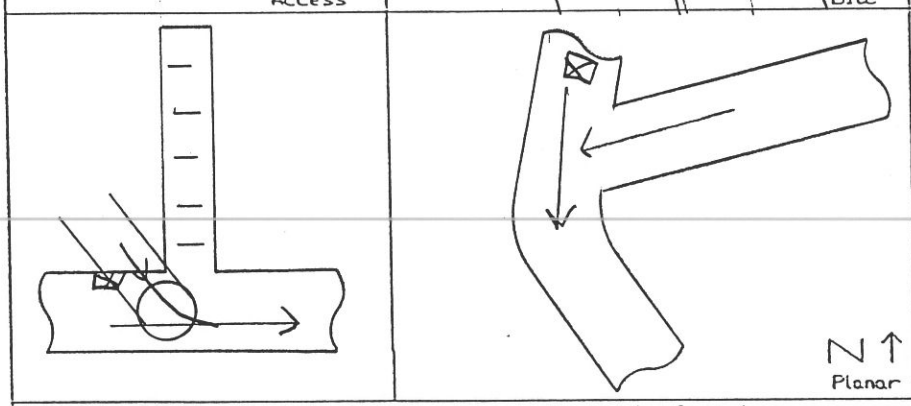

Special Installation ⇒ ultra, vel and pressure installed u/s of manhole not including flow from east on Columbus Ave

SAFETY

Manhole Depth: 8 FT

Traffic: Heavy

Gas & Investigation: Neg

Manhole Condition: Fair

Frame: Regular/Irregular

Q.C. Inspector:

Date:

Comments:

COMM2

Pipe Type: Brick

BACKUP	Y	N	?	Distance
Trunk Reg				
Lift Sta.				
STP				
Other Input				
Ind U/S				
C/S U/S				

General Condition, overflows, bypasses, weirs, special information, monitor characteristics, surcharge

* Please make a precise drawing if odd-shaped pipe or special installation

Hydraulics: Deep, Smooth, Slow flow

Approval:

Access Pole#:

Distance from M/H:

Road Cut Length:

Trench Length:

R.O.W. #:

- Need Chestwaders for installation.

Surcharge: yes SC Height: HEIGHT

Inv.: DOF: +/- Time: Vol: fps Silt:

Upstream Manhole Good Site

Downstream Manhole Did not Investigate

Mini System Character: Residential/Commercial/Industrial/Vacant

CARDINAL
ENGINEERING ASSOC., INC.
99 Colony Street
MERIDEN, CONNECTICUT 06450
(203) 238-1969 FAX (203) 630-2056

JOB [illegible]
SHEET NO. 1 OF 3
CALCULATED BY
DATE 7/30/97
CHECKED BY
DATE 1:00 PM
SCALE WEATHER CLEAR 80

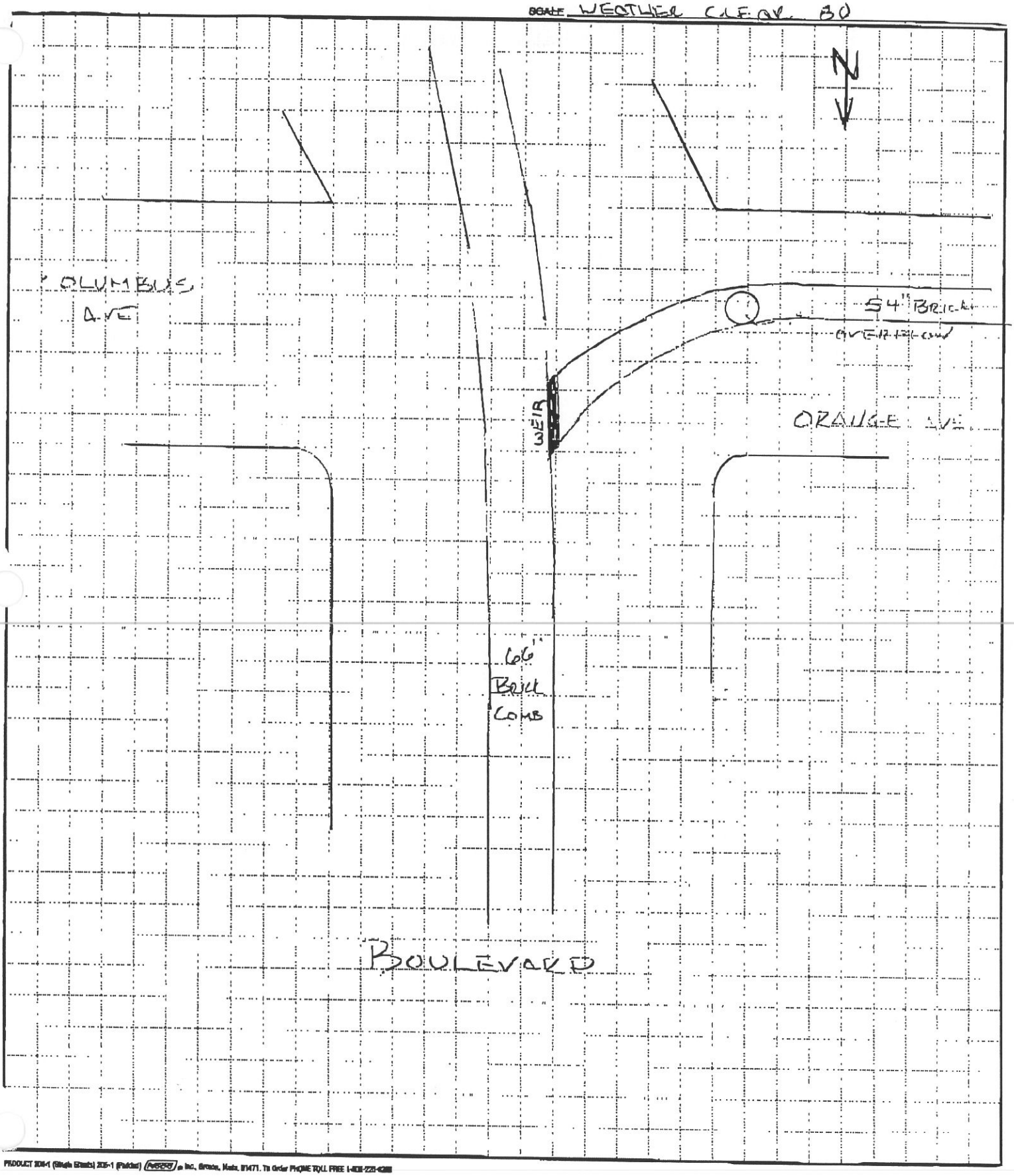

PRODUCT 208-1 (Single Sheets) 208-1 (Padded) NEBS Inc., Groton, Mass. 01471. To Order PHONE TOLL FREE 1-800-225-6380

CARDINAL ENGINEERING ASSOC., INC.
99 Colony Street
MERIDEN, CONNECTICUT 06450
(203) 238-1969 FAX (203) 630-2056

JOB
SHEET NO. 2 OF 3
CALCULATED BY DATE
CHECKED BY DATE
SCALE 1" = 4'

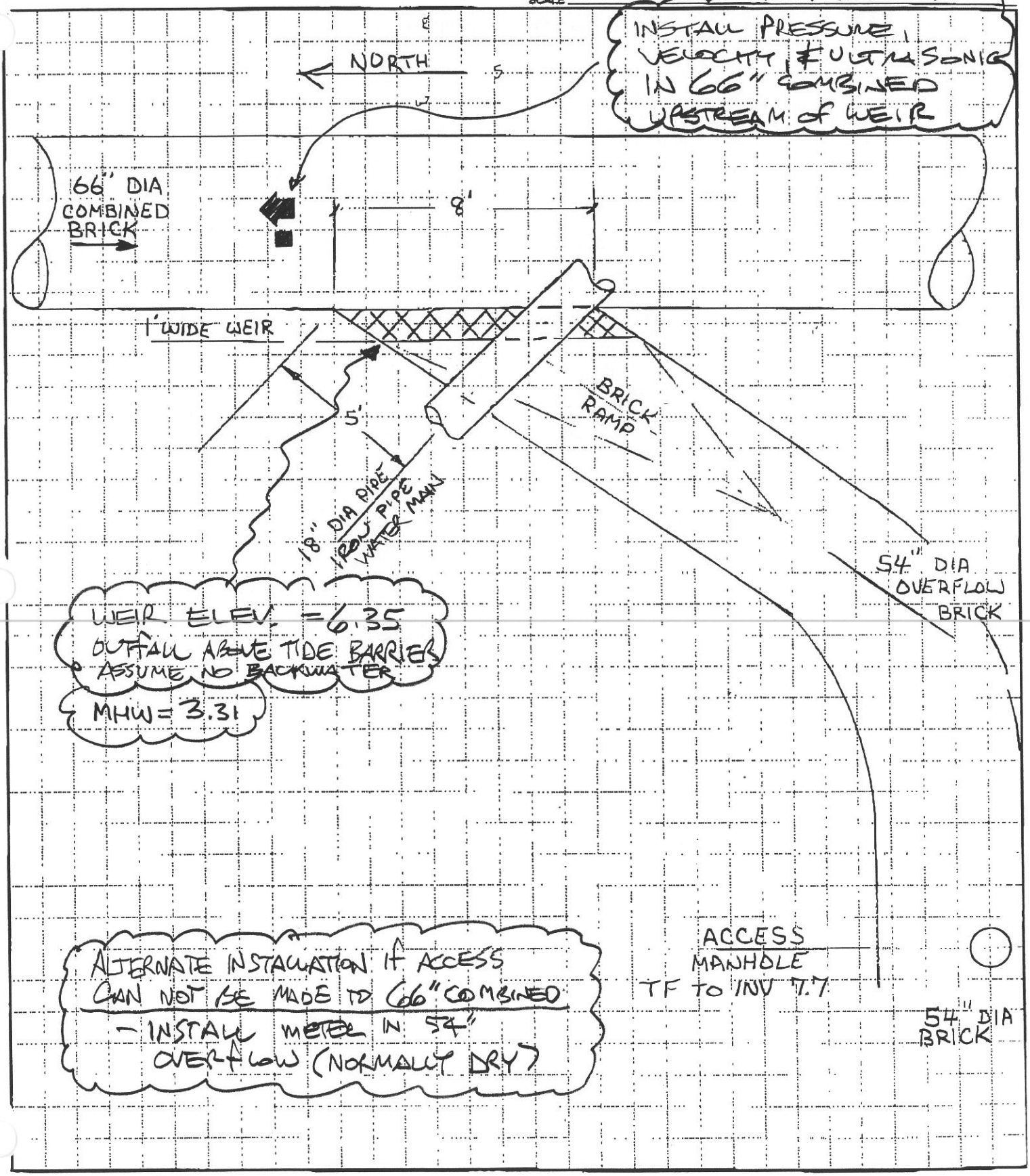

PRODUCT 204-1 (Single Sheets) 205-1 (Padded) NEBS Inc., Boston, Mass. 01471. To Order PHONE TOLL FREE 1-800-225-6380

CARDINAL
ENGINEERING ASSOC., INC.
99 Colony Street
MERIDEN, CONNECTICUT 06450
(203) 238-1969 FAX (203) 630-2056

JOB

SHEET NO. 3 OF 3

CALCULATED BY DATE

CHECKED BY DATE

SCALE 1" = 3'

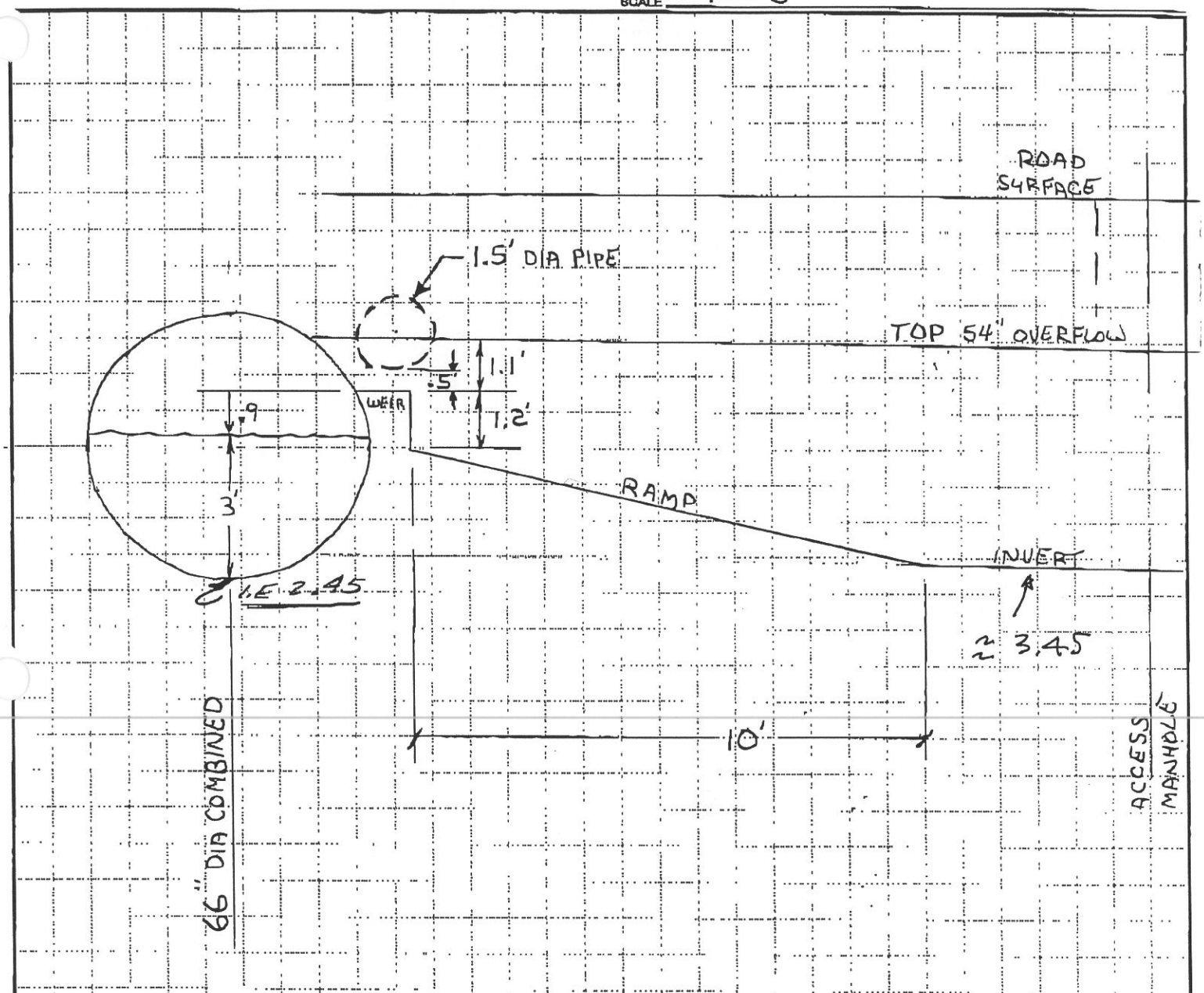

TF TO INV @ ACCESS MANHOLE 7.7'
TF TO TOP OF WEIR 4.1'
TF TO INV 66" COMBINE 8.0

FLOW IN 66" @ 1:50 PM 3'

PRODUCT 204-1 (Single Sheets) 205-1 (Padded) AMPAD © Inc., Groton, Mass. 01471. To ORDER PHONE TOLL FREE 1-800-225-6380
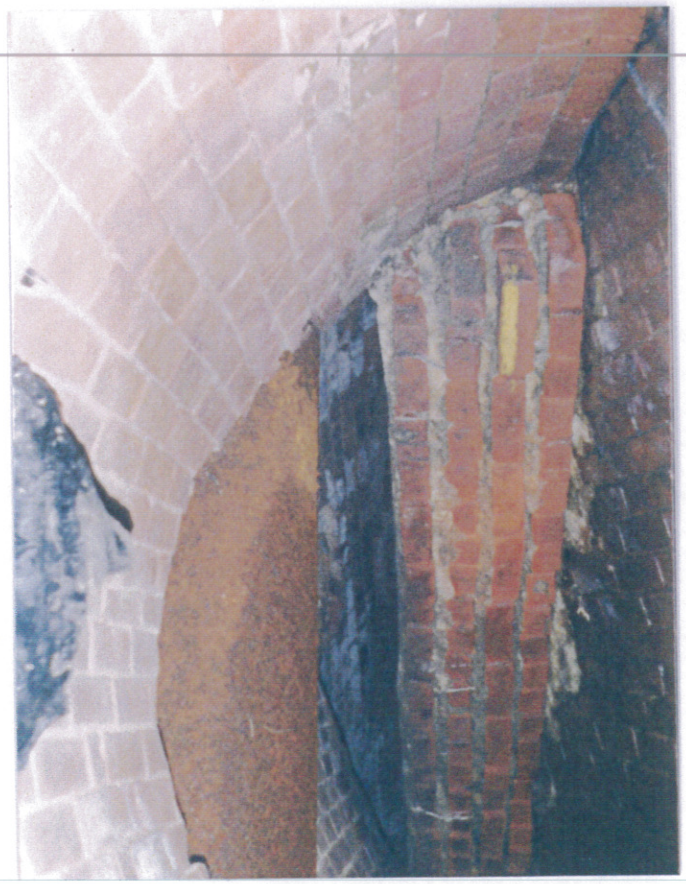
18" PIPE