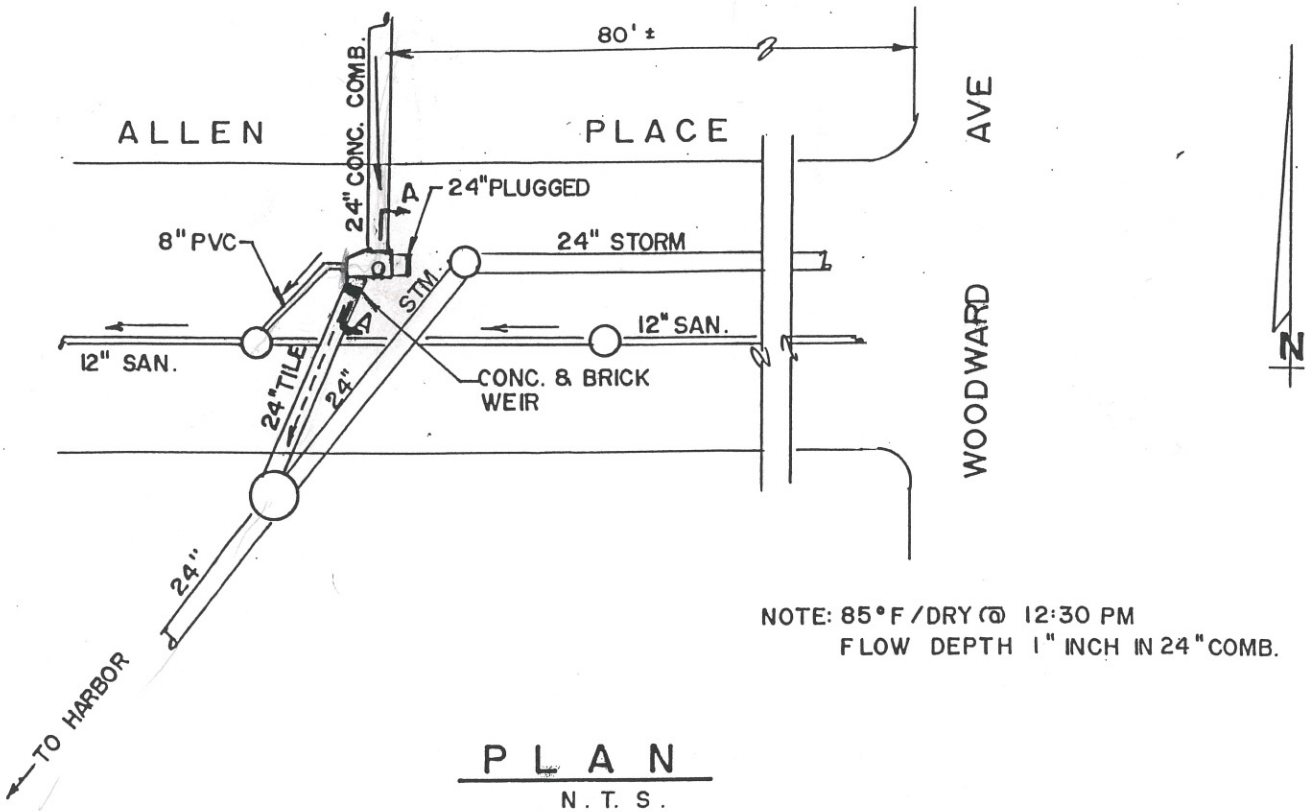

NOTE: 85°F / DRY @ 12:30 PM
FLOW DEPTH 1" INCH IN 24" COMB.

PLAN
N. T. S.

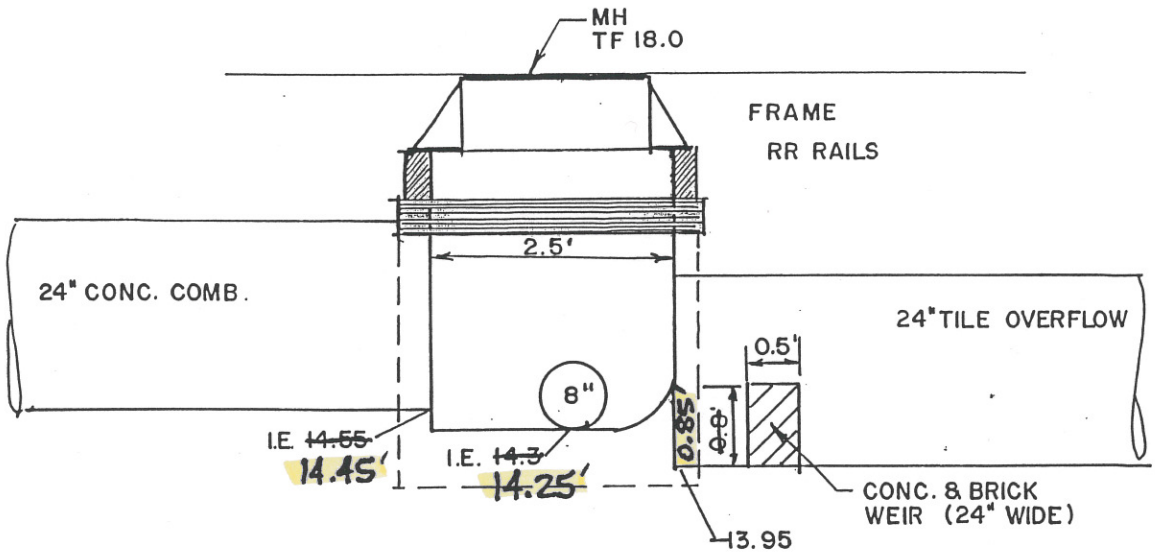

Changes based on field survey by UIC 2/26/98

SECTION A-A
N. T. S.

LEGEND

WET WEATHER FLOW

DRY WEATHER FLOW

OVERFLOW NO. 022
ALLEN PLACE
NEW HAVEN, CONNECTICUT

DATE: 7-23-97
JOB NO. 1146
SHT. NO. 17

ADS Environmental Services, Inc.

3600 Site Report

Town: Map 55	Manhole #:	AN #: M-22
RC Zone: K-22	Bat Serial #:	Monitor #:
Velocity:	Lif Diameter:	Diameter: 24"

Project/Phase: New Haven, CT CSO Date: 8/28/97 Name: MW

Address/Location: 30 Allen Place

Phone Co. Address:

Access: Drive

Phone Number:

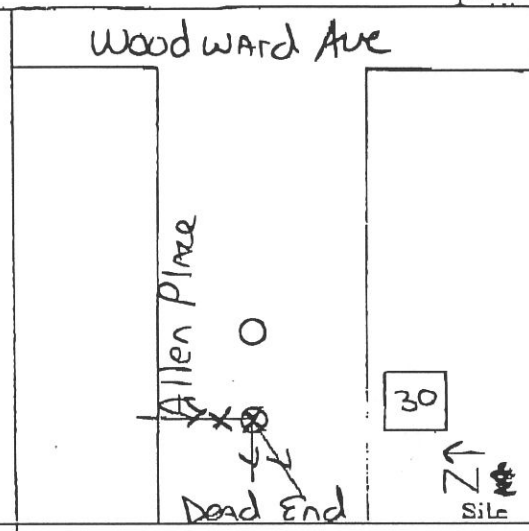

24" Ring and Crank Assembly
ultra, vel, pressure.

SAFETY

Manhole Depth: 4FT

Traffic: Light - None

Gas & Investigation: Neg

Manhole Condition: Fair

Frame: Regular/Irregular

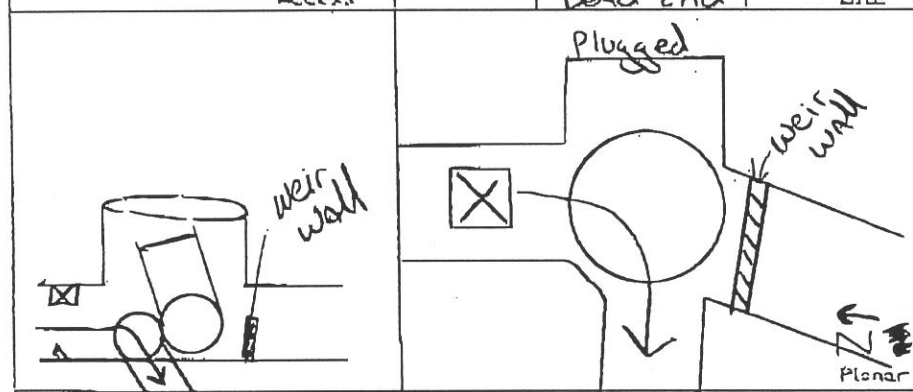

Q.C. Inspector:

Date:

Comments:

COMM2

Pipe Type: RCP

BACKUP	Y	N	?	Distance
Trunk Reg				
Lift Sta				
STP				
Other Input				
Ind U/S				
I/S U/S				

General Condition, overflows, bypasses, weirs, special information, monitor characteristics, surcharge
* Please make a precise drawing if odd-shaped pipe or special installation.

Hydraulics: Wavy, Shallow Flow; but monitorable

Approval:

Access Poles:

Distance from M/H:

Road Cut Length:

Trench Length:

Surcharge: Yes SC Height: HEIGHT 3FT

R.O.W. #:

Inv.: DOF: 2.0 +/- .25 Time: 1050 Vel: 1.5 fps Silt: .75 - Request 11:00 for shallow flow.

Upstream Manhole Did not Investigate

Downstream Manhole Does not Isolate

Mini System Character: Residential/Commercial/Industrial/Vacant

24" COMBINED
8" PVC
24" TILE OVERFLOW

OF 022
24" OVERFLOW
WEIR
8" SAN

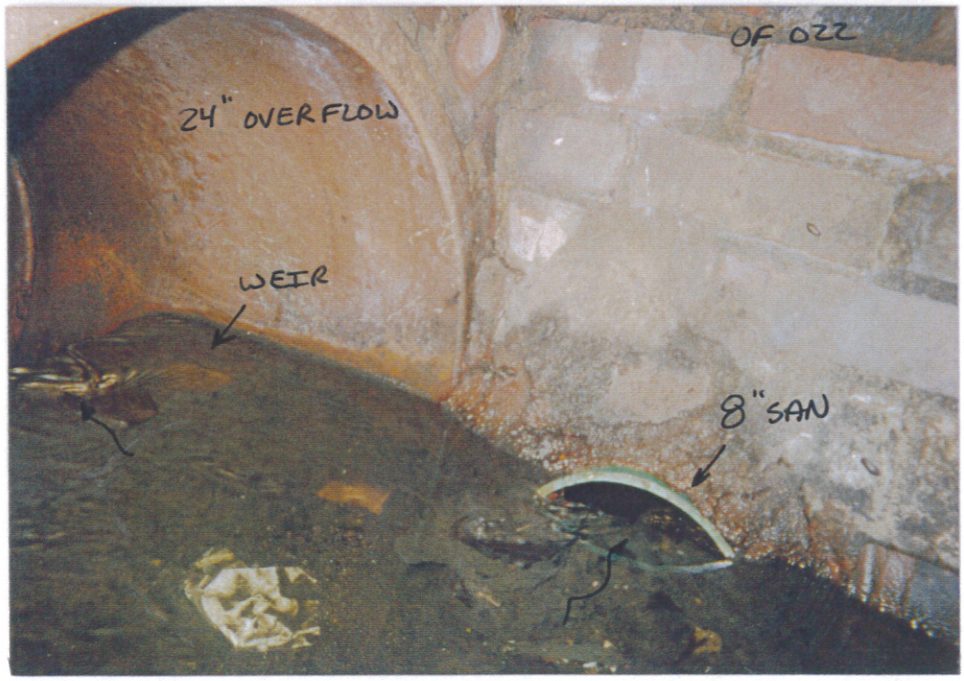
OF 022
24" OVERFLOW
WEIR
8" SAN

OF 022

OF 022
24" PLUGGED
10" VCP FROM CB
24" COMB.

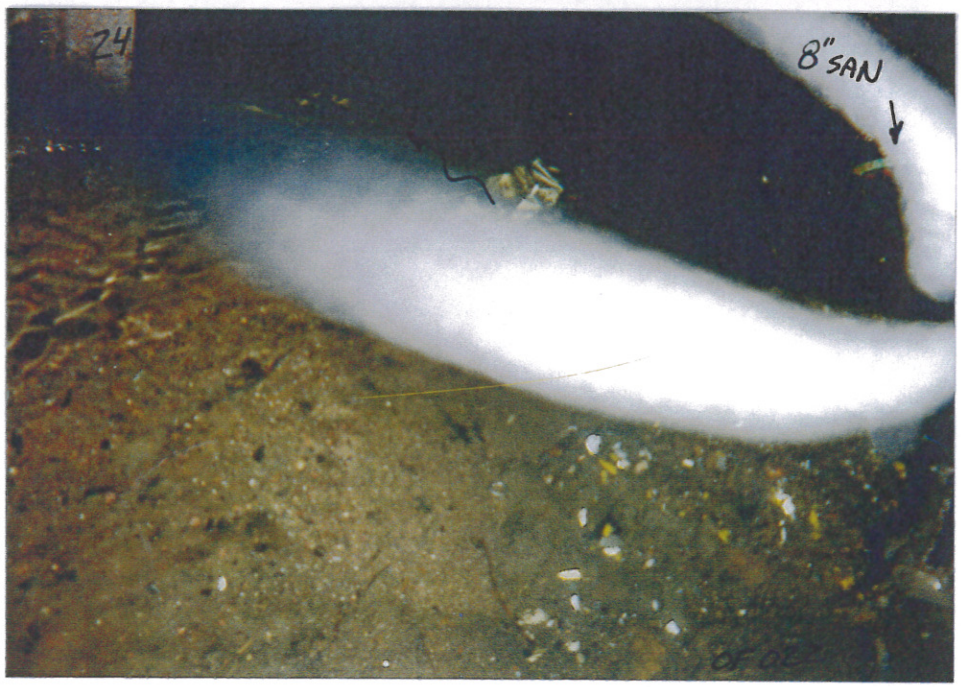
24
8" SAN

OF 022

OF 022
24" OVERFLOW
WEIR
8" PVC

OF 022