Dames & Moore

Emergency Repairs For Red Hill Tanks at the Fleet Industrial & Supply Center

Contract No. N62742-96-C-1356

Repair Record

Tank No.: 8 Repair No.: ADD 013 Type: 8 Location: B11-3

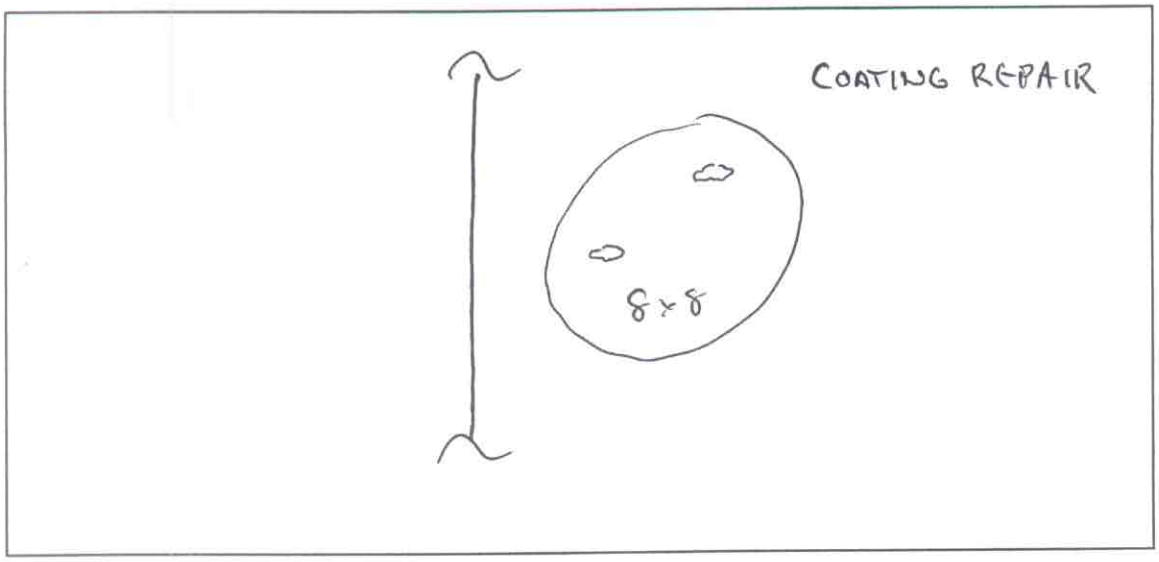

Sketch of Repair Area

Weld Repair N/A

WPS No.: _____

Welder ID: _____

NDT Performed: Visual _____ Vacuum Box _____ Dye Penetrant _____

Rework Required: _____

Repair Acceptable: _____ Date Accepted: _____

Coating Repair

Coating Type: EPOXY

Surface Preparation: ✓ Primer Coat: ✓ Intermediate Coat: ✓ Final Coat: ✓

NDT Performed: Visual: ✓ DFT: ✓ Average DFT: 8-15 mil

Rework Required: N/A

Repair Acceptable: John Schnell Date Accepted: 4-13-98

DEFECT INSPECTED BY TK & JF 3/16/98

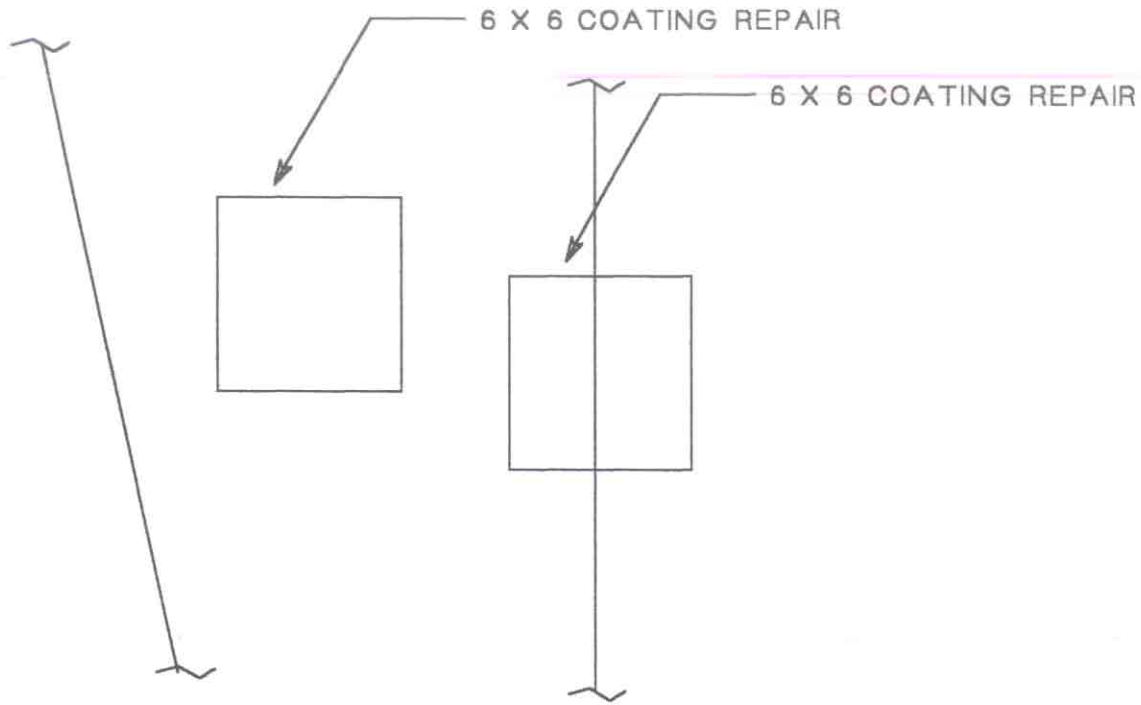

TYPE 9 REPAIR

MID ATLANTIC ENVIRONMENTAL	
EMERGENCY REPAIRS FOR RED HILL TANKS	
Tank #8 RECOMMENDED REPAIR DRAWING	
Repair No.: 014	File:8r014
LOWER DOME	Quadrant: B
Course: 3	PLATE: 10
Drawn by: Tom Kitchen	Date: 5/4/98

Dames & Moore

Emergency Repairs For Red Hill Tanks at the Fleet Industrial & Supply Center

Contract No. N62742-96-C-1356

Repair Record

Tank No.: 8 Repair No.: ADD 014 Type: 8 Location: B10 - 3

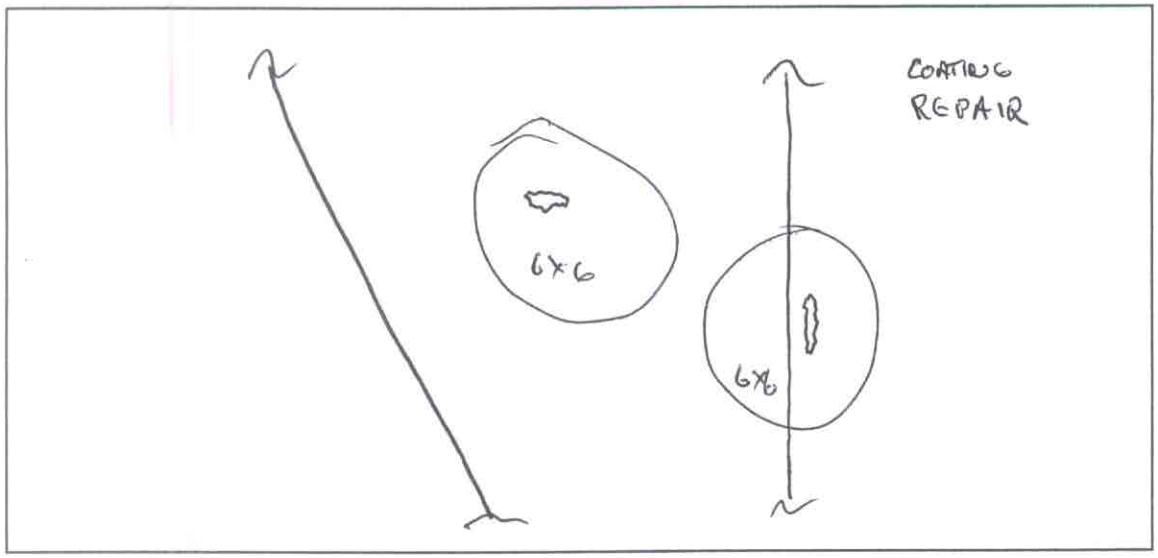

Sketch of Repair Area

Weld Repair N/A

WPS No.: _____

Welder ID: _____

NDT Performed: Visual _____ Vacuum Box _____ Dye Penetrant _____

Rework Required: _____

Repair Acceptable: _____ Date Accepted: _____

Coating Repair

Coating Type: EPOXY

Surface Preparation: ✓ Primer Coat: ✓ Intermediate Coat: ✓ Final Coat: ✓

NDT Performed: Visual: ✓ DFT: ✓ Average DFT: 8-15 mils

Rework Required: N/A

Repair Acceptable: John Zadrell Date Accepted: 4-13-98

DEFECT INSPECTED BY TK & JF 3/16/98

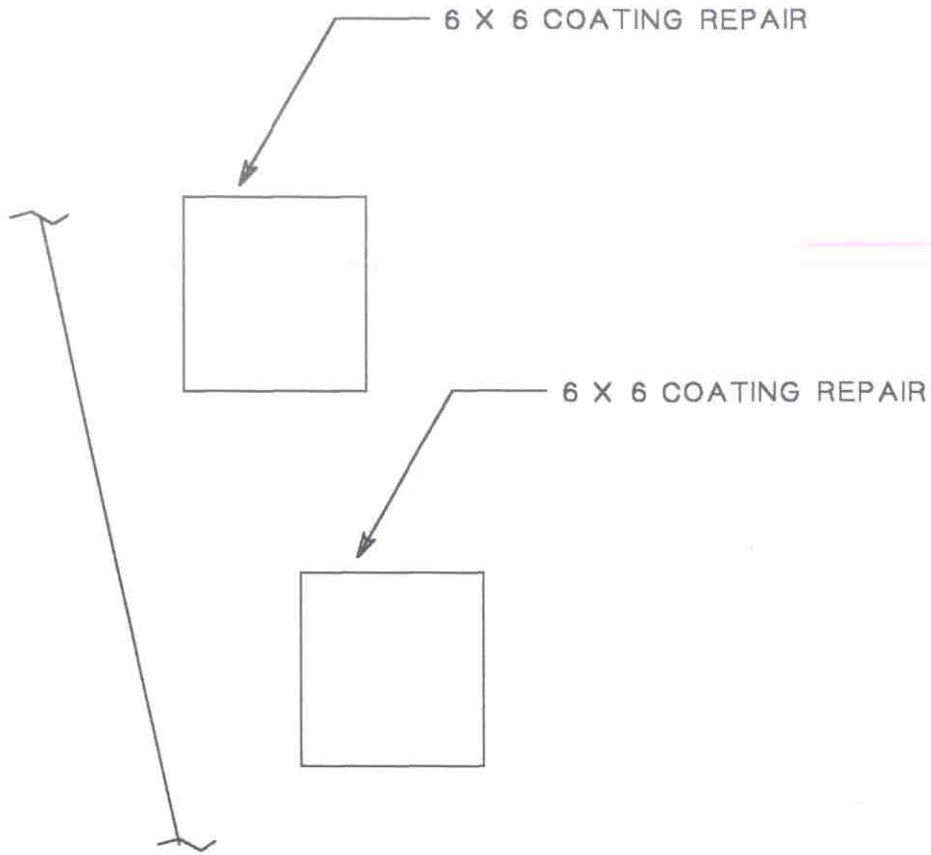

TYPE 8 REPAIR

MID ATLANTIC ENVIRONMENTAL	
EMERGENCY REPAIRS FOR RED HILL TANKS	
Tank #8 RECOMMENDED REPAIR DRAWING	
Repair No.: 015	File:8r015
LOWER DOME	Quadrant: B
Course: 3	PLATE: 10
Drawn by: Tom Kitchen	Date: 5/4/98

Dames & Moore

Emergency Repairs For Red Hill Tanks at the Fleet Industrial & Supply Center

Contract No. N62742-96-C-1356

Repair Record

Tank No.: 8 Repair No.: ADD 015 Type: 8 Location: B10 - 3

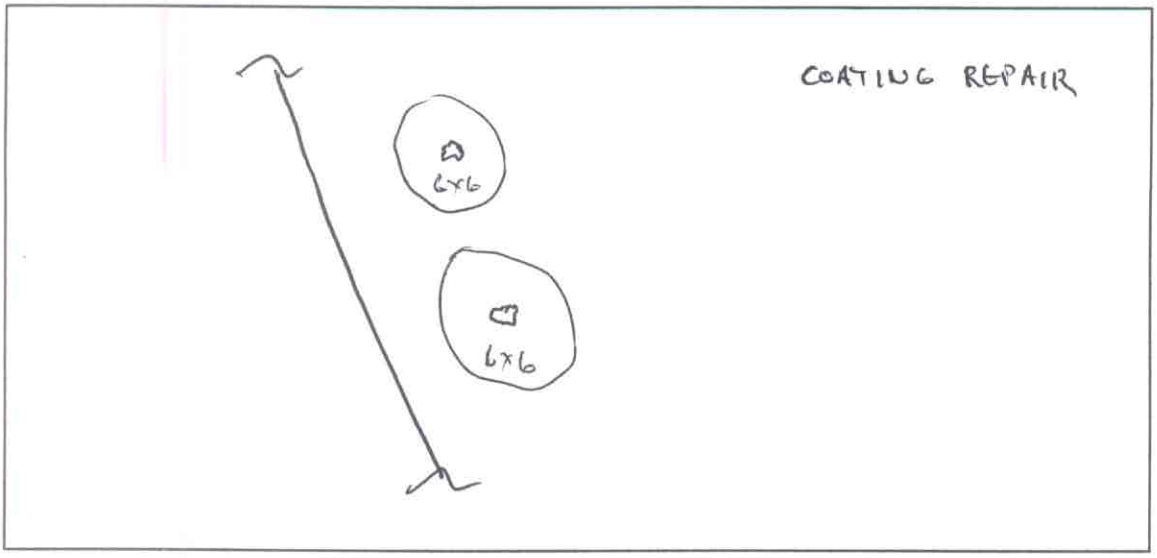

Sketch of Repair Area

Weld Repair N/A

WPS No.: _____

Welder ID: _____

NDT Performed: Visual _____ Vacuum Box _____ Dye Penetrant _____

Rework Required: _____

Repair Acceptable: _____ Date Accepted: _____

Coating Repair

Coating Type: EPOXY

Surface Preparation: ✓ Primer Coat: ✓ Intermediate Coat: ✓ Final Coat: ✓

NDT Performed: Visual: ✓ DFT: ✓ Average DFT: 8-15 mils

Rework Required: N/A

Repair Acceptable: John Zahrell Date Accepted: 4-13-98

DEFECT INSPECTED BY TK & JF 3/16/98

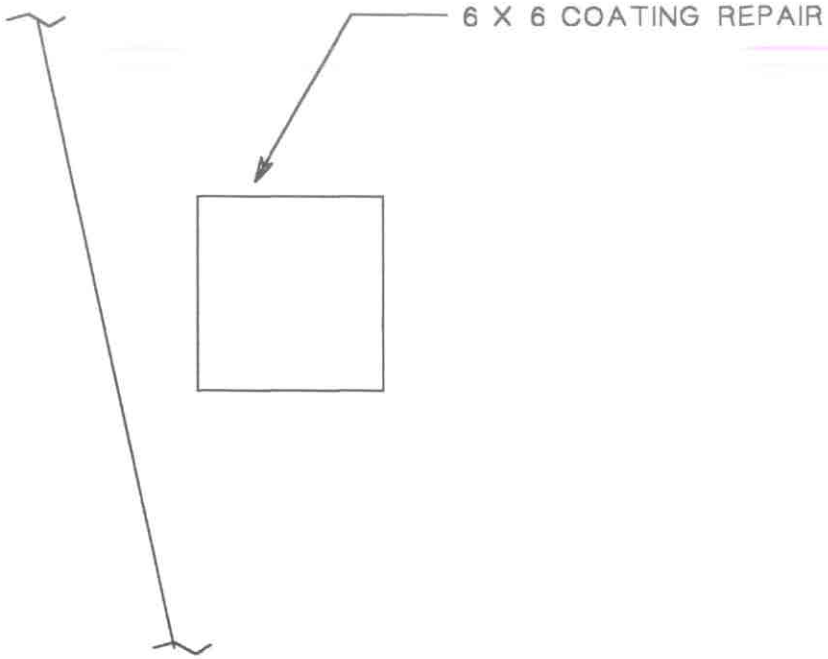

TYPE 8 REPAIR

MID ATLANTIC ENVIRONMENTAL	
EMERGENCY REPAIRS FOR RED HILL TANKS	
Tank #8 RECOMMENDED REPAIR DRAWING	
Repair No.: 016	File:8r016
LOWER DOME	Quadrant: B
Course: 3	PLATE: 19
Drawn by: Tom Kitchen	Date: 5/4/98

Dames & Moore

Emergency Repairs For Red Hill Tanks at the Fleet Industrial & Supply Center

Contract No. N62742-96-C-1356

Repair Record

Tank No.: 8 Repair No.: ADP 016 Type: 8 Location: B9-3

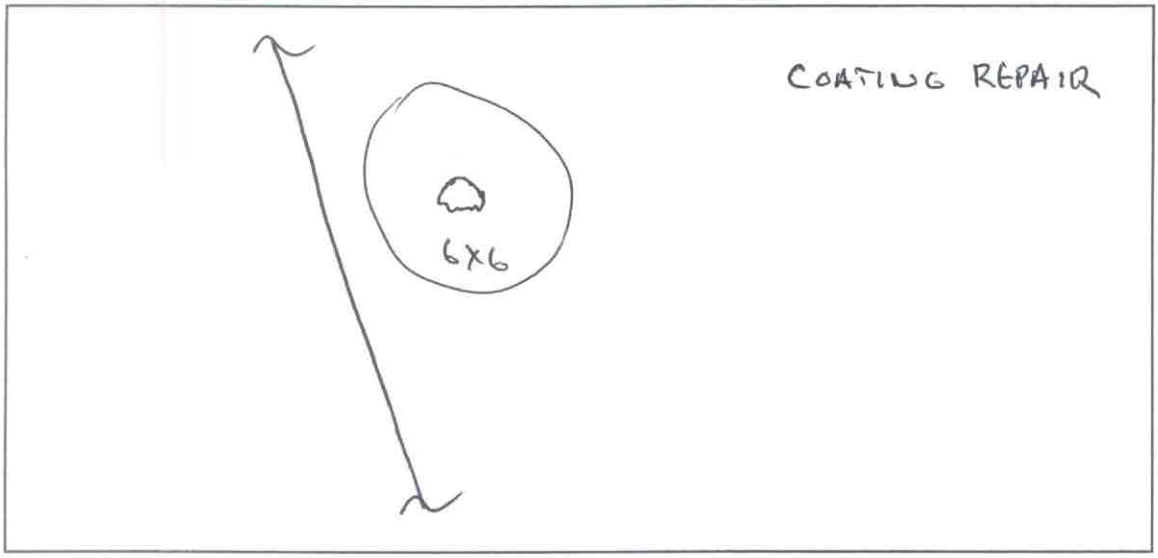

Sketch of Repair Area

Weld Repair N/A

WPS No.: _____

Welder ID: _____

NDT Performed: Visual _____ Vacuum Box _____ Dye Penetrant _____

Rework Required: _____

Repair Acceptable: _____ Date Accepted: _____

Coating Repair

Coating Type: EPOXY

Surface Preparation: ✓ Primer Coat: ✓ Intermediate Coat: ✓ Final Coat: ✓

NDT Performed: Visual: ✓ DFT: ✓ Average DFT: 8-15 mils

Rework Required: N/A

Repair Acceptable: John Zabrell Date Accepted: 4-13-98

DEFECT INSPECTED BY TK & JF 3/16/98

6 X 8 COATING REPAIR

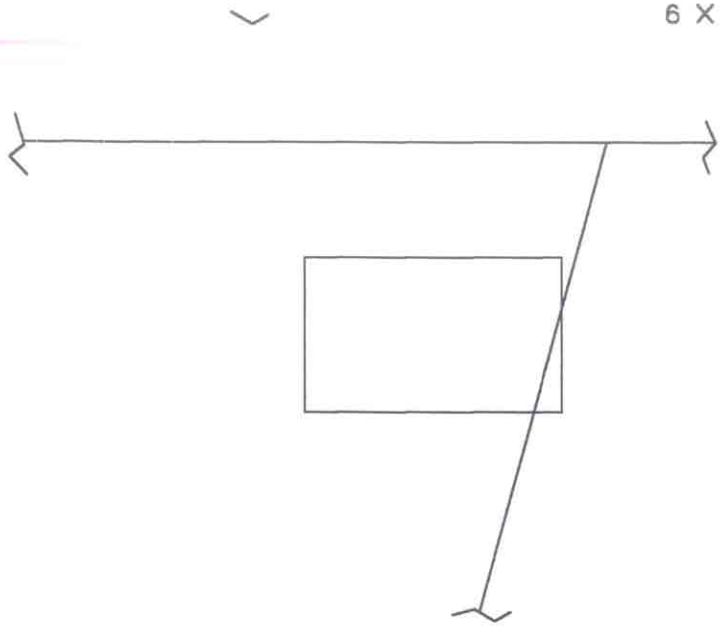

TYPE 8 REPAIR

MID ATLANTIC ENVIRONMENTAL	
EMERGENCY REPAIRS FOR RED HILL TANKS	
Tank #8 RECOMMENDED REPAIR DRAWING	
Repair No.: 017	File:8r017
LOWER DOME	Quadrant: B
Course: 3	PLATE: 8
Drawn by: Tom Kitchen	Date: 5/4/98

Dames & Moore

Emergency Repairs For Red Hill Tanks at the Fleet Industrial & Supply Center

Contract No. N62742-96-C-1356

Repair Record

Tank No.: 8 Repair No.: ADD 017 Type: 8 Location: 88-3

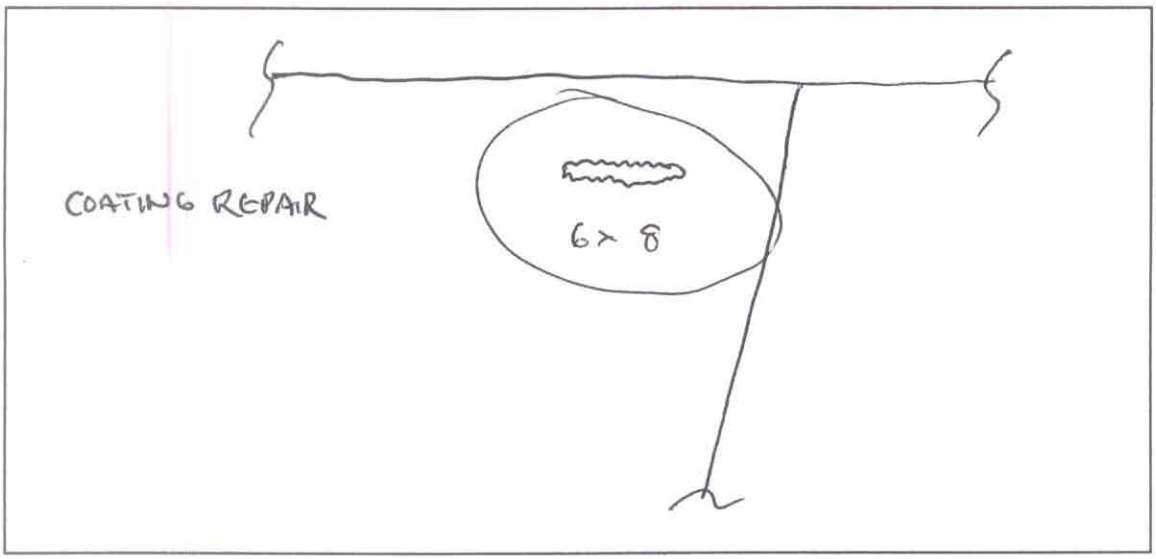

Sketch of Repair Area

Weld Repair N/A

WPS No.: _____

Welder ID: _____

NDT Performed: Visual _____ Vacuum Box _____ Dye Penetrant _____

Rework Required: _____

Repair Acceptable: _____ Date Accepted: _____

Coating Repair

Coating Type: EPOXY

Surface Preparation: ✓ Primer Coat: ✓ Intermediate Coat: ✓ Final Coat: ✓

NDT Performed: Visual: ✓ DFT: ✓ Average DFT: 8-15 mils

Rework Required: N/A

Repair Acceptable: John Zydrell Date Accepted: 4-13-98

DEFECT INSPECTED BY TK & JF 3/16/98

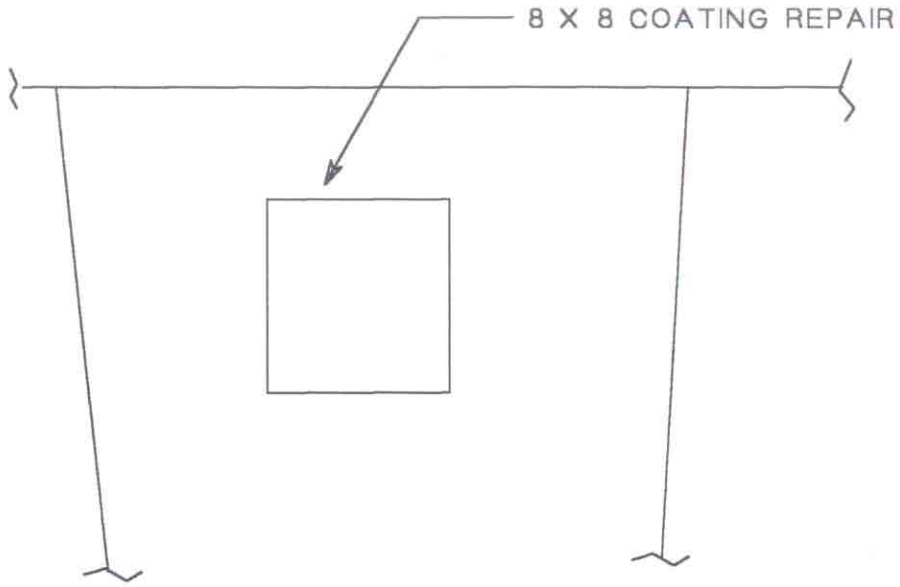

TYPE 8 REPAIR

MID ATLANTIC ENVIRONMENTAL	
EMERGENCY REPAIRS FOR RED HILL TANKS	
Tank #8 RECOMMENDED REPAIR DRAWING	
Repair No.: 018	File:8r018
LOWER DOME	Quadrant: B
Course: 2	PLATE: 10
Drawn by: Tom Kitchen	Date: 5/4/98

Dames & Moore

Emergency Repairs For Red Hill Tanks at the Fleet Industrial & Supply Center

Contract No. N62742-96-C-1356

Repair Record

Tank No.: 8 Repair No.: ADD 018 Type: 8 Location: B10-2

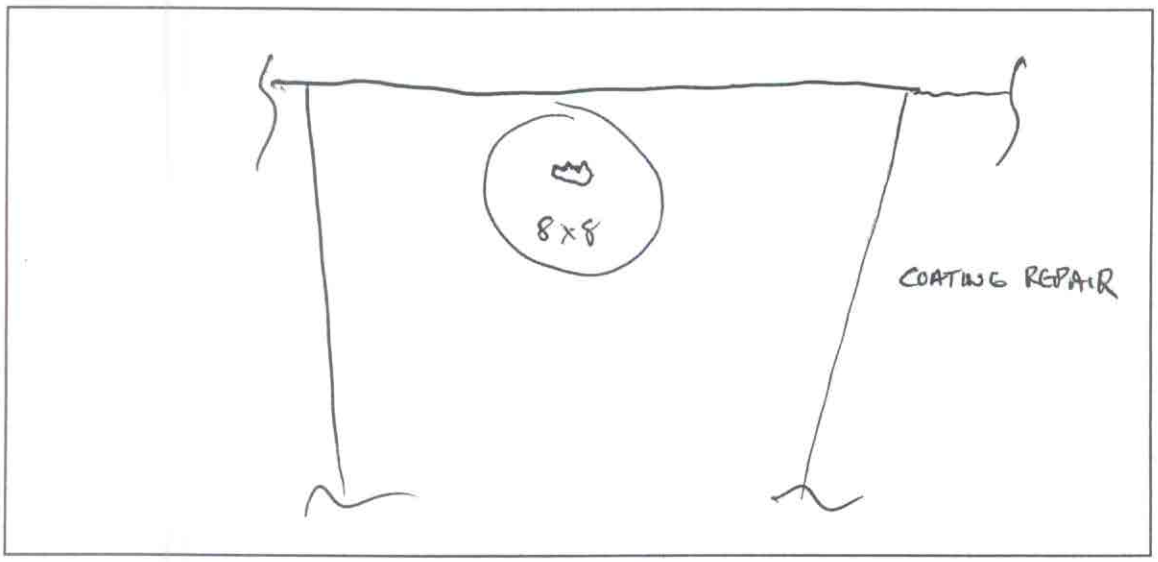

Sketch of Repair Area

Weld Repair N/A

WPS No.: _____

Welder ID: _____

NDT Performed: Visual _____ Vacuum Box _____ Dye Penetrant _____

Rework Required: _____

Repair Acceptable: _____ Date Accepted: _____

Coating Repair

Coating Type: EPOXY

Surface Preparation: ✓ Primer Coat: ✓ Intermediate Coat: ✓ Final Coat: ✓

NDT Performed: Visual: ✓ DFT: ✓ Average DFT: 15-22 mils

Rework Required: N/A

Repair Acceptable: John Bidwell Date Accepted: 4-13-98

DEFECT INSPECTED BY TK & JF 3/16/98

SCATTERED BLISTERS APPROXIMATE AREA OF COATING REPAIR EQUAL 2 SQUARE METERS

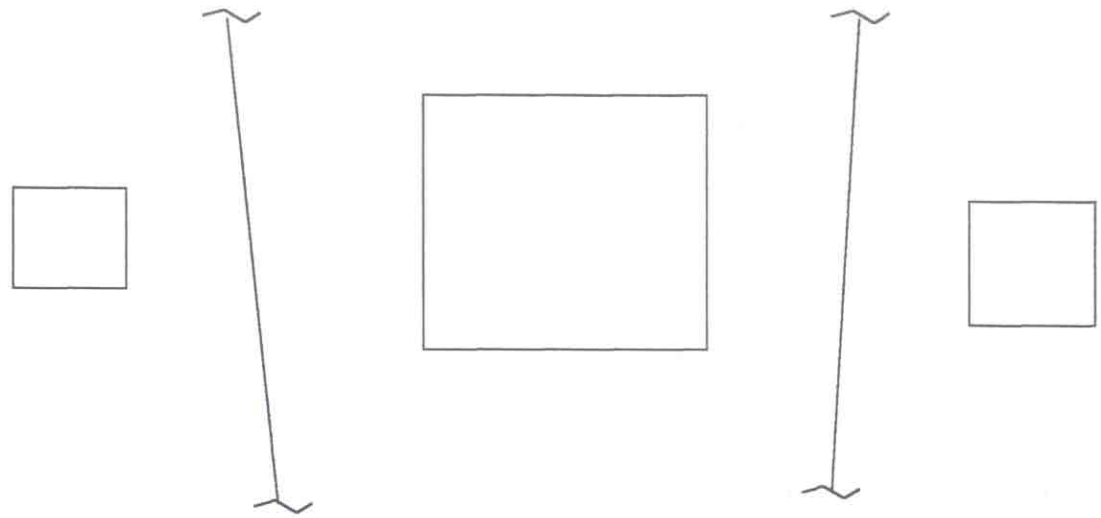

TYPE 8 REPAIR

MID ATLANTIC ENVIRONMENTAL	
EMERGENCY REPAIRS FOR RED HILL TANKS	
Tank #8 RECOMMENDED REPAIR DRAWING	
Repair No.: 019 & 020	File:8r019
LOWER DOME	Quadrant: B
Course: 2	PLATE: 11
Drawn by: Tom Kitchen	Date: 5/4/98

Dames & Moore

Emergency Repairs For Red Hill Tanks at the Fleet Industrial & Supply Center

Contract No. N62742-96-C-1356

Repair Record

Tank No.: 8 Repair No.: ADD 019 Type: 8 Location: B11 - 2

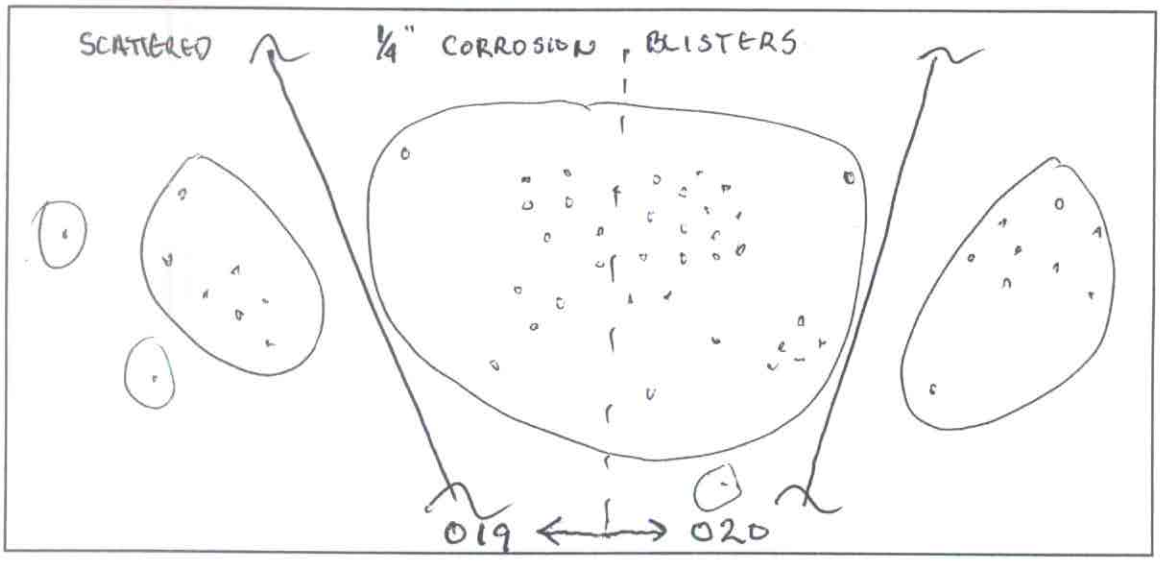

Sketch of Repair Area

Weld Repair N/A

WPS No.: _____

Welder ID: _____

NDT Performed: Visual _____ Vacuum Box _____ Dye Penetrant _____

Rework Required: _____

Repair Acceptable: _____ Date Accepted: _____

Coating Repair

Coating Type: EPOXY

Surface Preparation: ✓ Primer Coat: ✓ Intermediate Coat: ✓ Final Coat: ✓

NDT Performed: Visual: ✓ DFT: ✓ Average DFT: 15-22 mils

Rework Required: N/A

Repair Acceptable: John Zaborell Date Accepted: 4-13-98

Dames & Moore

Emergency Repairs For Red Hill Tanks at the Fleet Industrial & Supply Center

Contract No. N62742-96-C-1356

Repair Record

Tank No.: 8 Repair No.: ADD 019 Type: 8 Location: B11 - 2

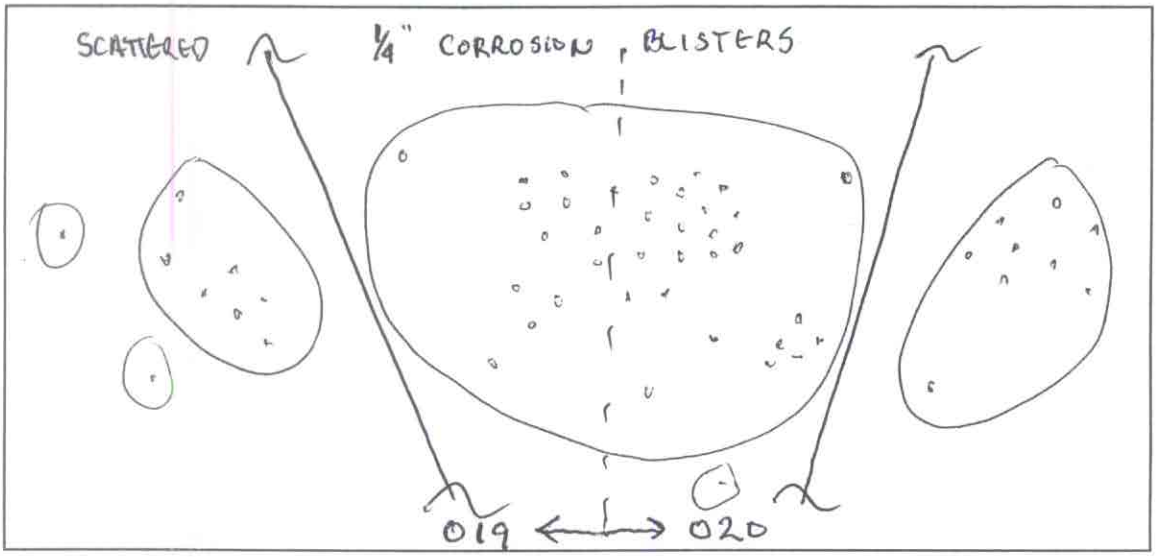

Sketch of Repair Area

Weld Repair N/A

WPS No.: _____

Welder ID: _____

NDT Performed: Visual _____ Vacuum Box _____ Dye Penetrant _____

Rework Required: _____

Repair Acceptable: _____ Date Accepted: _____

Coating Repair

Coating Type: EPOXY

Surface Preparation: ✓ Primer Coat: ✓ Intermediate Coat: ✓ Final Coat: ✓

NDT Performed: Visual: ✓ DFT: ✓ Average DFT: 15.22 mils

Rework Required: N/A

Repair Acceptable: John Zadrell Date Accepted: 4-13-98

Dames & Moore

Emergency Repairs For Red Hill Tanks at the Fleet Industrial & Supply Center
Contract No. N62742-96-C-1356

Repair Record

Tank No.: 8 Repair No.: ADD [redacted] 020 Type: 8 Location: B11 - 2

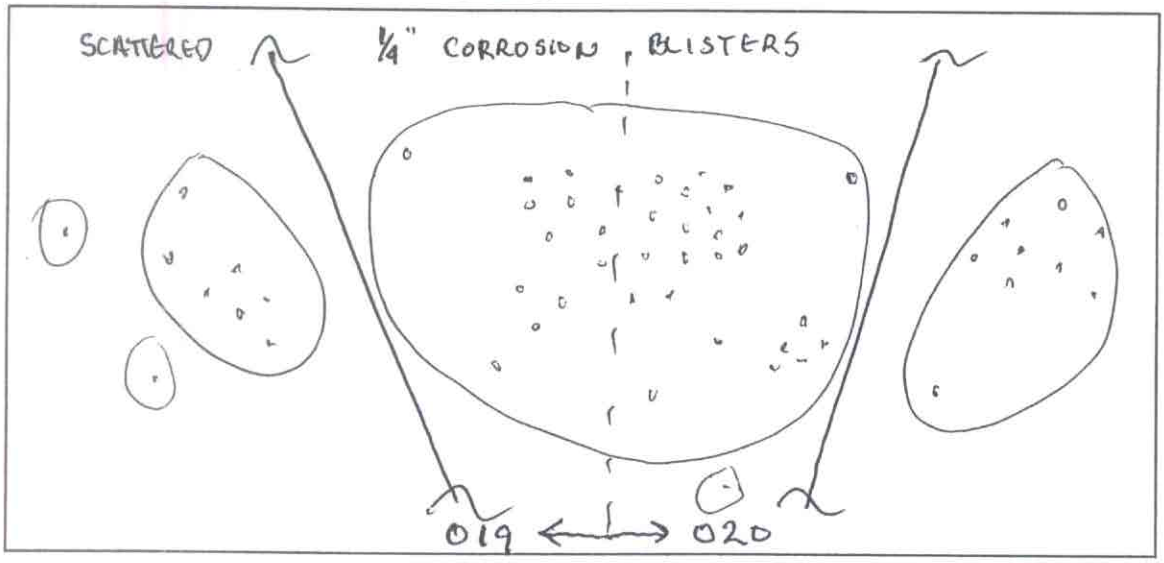

Sketch of Repair Area

Weld Repair N/A

WPS No.: _____

Welder ID: _____

NDT Performed: Visual _____ Vacuum Box _____ Dye Penetrant _____

Rework Required: _____

Repair Acceptable: _____ Date Accepted: _____

Coating Repair

Coating Type: EPOXY

Surface Preparation: ✓ Primer Coat: ✓ Intermediate Coat: ✓ Final Coat: ✓

NDT Performed: Visual: ✓ DFT: ✓ Average DFT: 15-22 mils

Rework Required: N/A

Repair Acceptable: John Zahrell Date Accepted: 4-13-98

DEFECT INSPECTED BY TK & JF 3/16/98

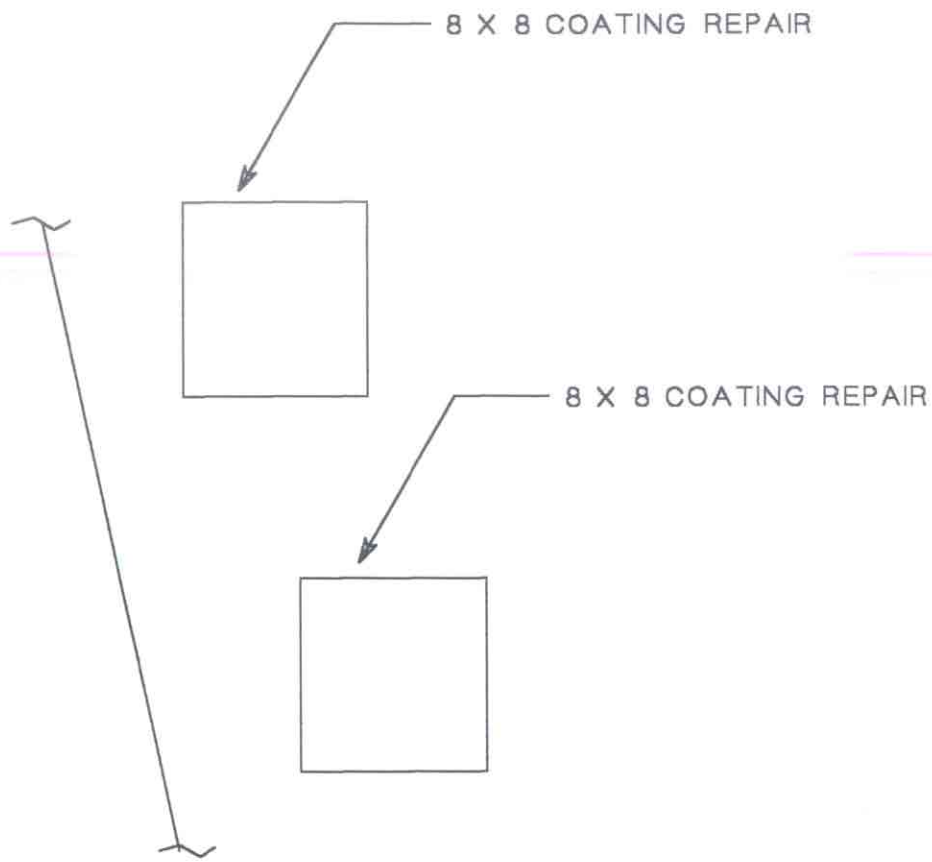

TYPE 8 REPAIR

MID ATLANTIC ENVIRONMENTAL	
EMERGENCY REPAIRS FOR RED HILL TANKS	
Tank #8 RECOMMENDED REPAIR DRAWING	
Repair No.: 021	File:8r021
LOWER DOME	Quadrant: A
Course: 2	PLATE: 2
Drawn by: Tom Kitchen	Date: 5/4/98

Dames & Moore

Emergency Repairs For Red Hill Tanks at the Fleet Industrial & Supply Center

Contract No. N62742-96-C-1356

Repair Record

Tank No.: 8 Repair No.: ADD 021 Type: 8 Location: A2-2

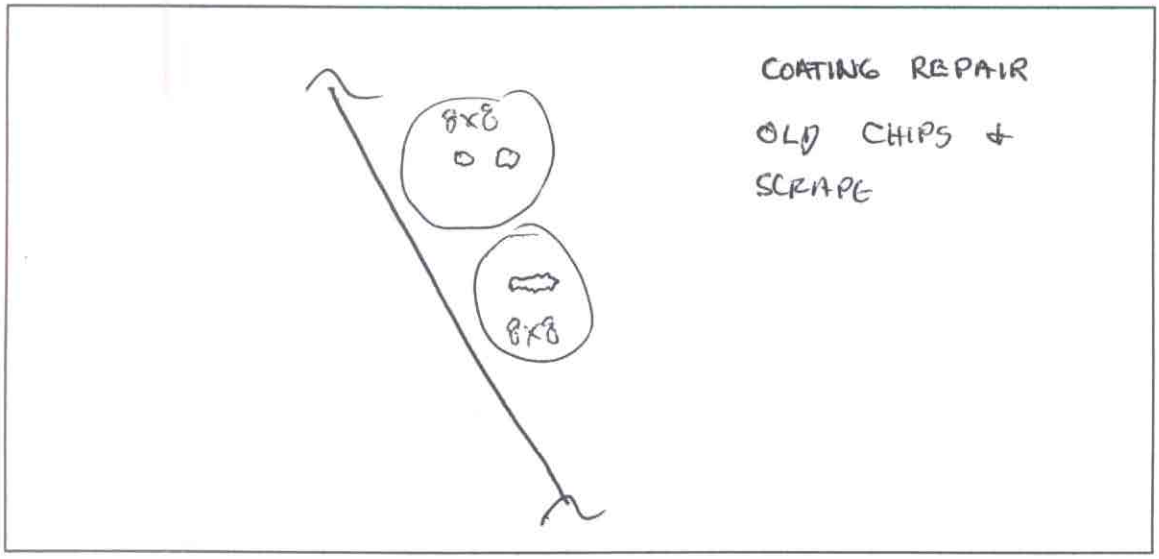

Sketch of Repair Area

Weld Repair N/A

WPS No.: _____

Welder ID: _____

NDT Performed: Visual _____ Vacuum Box _____ Dye Penetrant _____

Rework Required: _____

Repair Acceptable: _____ Date Accepted: _____

Coating Repair

Coating Type: EPOXY

Surface Preparation: ✓ Primer Coat: ✓ Intermediate Coat: ✓ Final Coat: ✓

NDT Performed: Visual: ✓ DFT: ✓ Average DFT: 15-22 mils

Rework Required: N/A

Repair Acceptable: John Zickrell Date Accepted: 4-13-98

DEFECT INSPECTED BY TK & JF 7/1/98

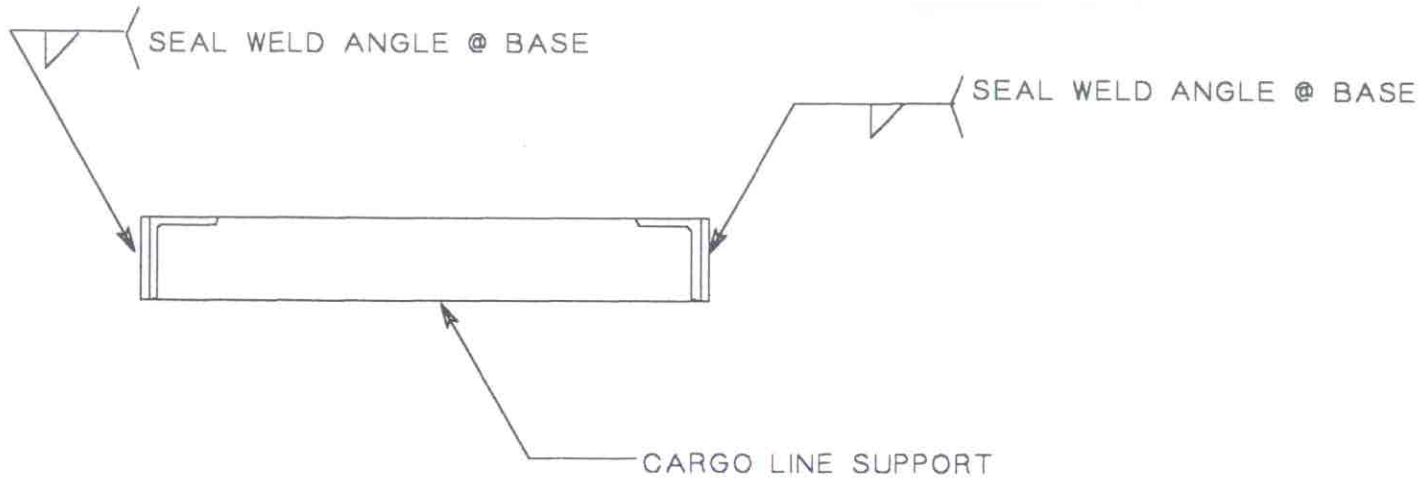

TYPE 10 REPAIR

MID ATLANTIC ENVIRONMENTAL	
EMERGENCY REPAIRS FOR RED HILL TANKS	
Tank #8 RECOMMENDED REPAIR DRAWING	
Repair No.: 022	File:8r022
LOWER DOME	Quadrant: B
Course: 1	PLATE: 12
Drawn by: Tom Kitchen	Date: 71/98

Dames & Moore

Emergency Repairs For Red Hill Tanks at the Fleet Industrial & Supply Center
Contract No. N62742-96-C-1356

Repair Record

Tank No.: 8 Repair No.: 022 Type: 10 Location: B-12-1

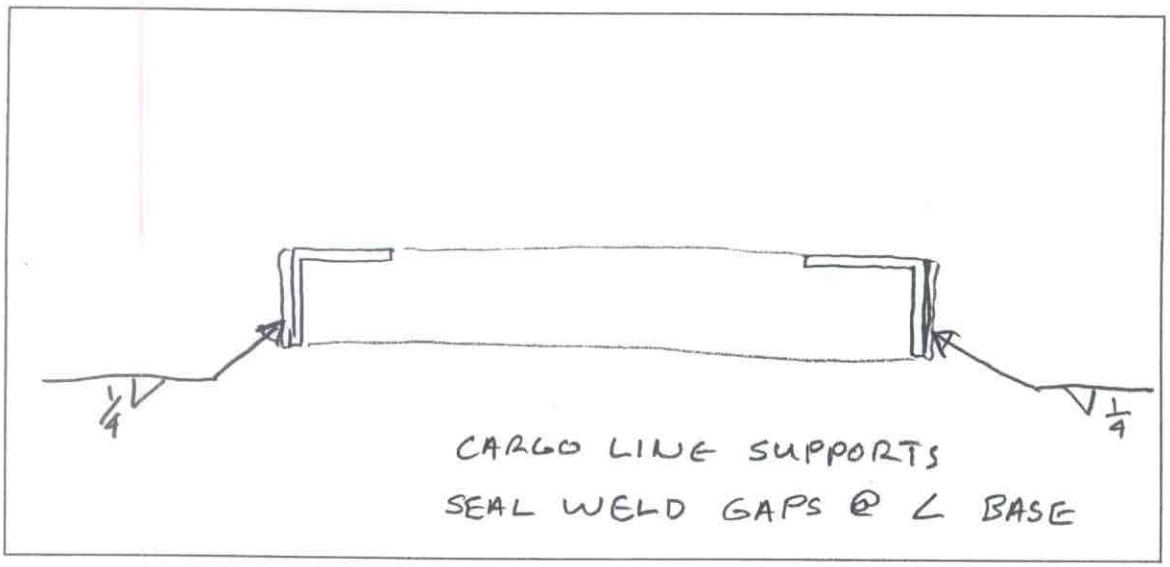

Sketch of Repair Area

Weld Repair

WPS No.: SM1.1-1

Welder ID: John Walsh

NDT Performed: Visual ✓ Vacuum Box _____ Dye Penetrant _____

Rework Required: _____

Repair Acceptable: John Barkell Date Accepted: 7-14-98

Coating Repair N/A

Coating Type: _____

Surface Preparation: _____ Primer Coat: _____ Intermediate Coat: _____ Final Coat: _____

NDT Performed: Visual: _____ DFT: _____ Average DFT: _____

Rework Required: _____

Repair Acceptable: _____ Date Accepted: _____

Section 10

AS-BUILT DRAWINGS

Section 11

Pictures

PICTURES OF PITTING AT BOTTOM OF TANK

Section 12

CONTRACT DRAWINGS