City of Philadelphia
Department of Public Health
Air Management Services

Title V/State Operating Permit No. V06-016

Philadelphia Energy Solutions Refining and Marketing LLC

3144 Passyunk Avenue
Philadelphia, PA 19145

Issuance Date: July 18, 2014
Effective Date: July 18, 2014
Expiration Date: July 18, 2019

SECTION A. SOURCE IDENTIFICATION 4

SECTION B. GENERAL REQUIREMENTS 39

1. DEFINITIONS 39
2. PROPERTY RIGHTS 39
3. PERMIT EXPIRATION 39
4. PERMIT RENEWAL 39
5. TRANSFER OF OWNERSHIP OR OPERATION 40
6. INSPECTION AND ENTRY 40
7. COMPLIANCE REQUIREMENTS 41
8. NEED TO HALT OR REDUCE ACTIVITY NOT A DEFENSE 41
9. DUTY TO PROVIDE INFORMATION 41
10. REOPENING AND REVISING THE TITLE V PERMIT FOR CAUSE 42
11. REOPENING A TITLE V PERMIT FOR CAUSE BY EPA 42
12. SIGNIFICANT OPERATING PERMIT MODIFICATIONS 43
13. MINOR OPERATING PERMIT MODIFICATIONS 43
14. ADMINISTRATIVE OPERATING PERMIT MODIFICATIONS 43
15. SEVERABILITY CLAUSE 43
16. FEE PAYMENT 43
17. AUTHORIZATION FOR DE MINIMIS EMISSIONS INCREASES 44
18. REACTIVATION OF SOURCES 46
19. CIRCUMVENTION 46
20. OPERATIONAL FLEXIBILITY 47
21. APPROVED ECONOMIC INCENTIVES AND EMISSION TRADING PROGRAMS 47
22. PERMIT SHIELD 47

SECTION C. FACILITY WIDE REQUIREMENTS 48

1. FUGITIVE EMISSIONS 48
2. ODOR EMISSIONS LIMITATIONS 49
3. VISIBLE EMISSIONS LIMITATIONS 49
4. NOISE AND VIBRATIONS 50
5. FUEL USAGE 50
6. OPEN BURNING 51
7. AIR POLLUTION EPISODE 51
8. MODIFICATION OF 112 POLLUTANTS WHICH ARE VOCS AND PM-10 51
9. RISK MANAGEMENT 52
10. STRATOSPHERIC OZONE PROTECTION 53
11. SAMPLING, TESTING AND MONITORING PROCEDURES 53
12. RECORDKEEPING REQUIREMENTS 53
13. REPORTING REQUIREMENTS 54
14. PHILADELPHIA TOXIC NOTIFICATION 55
15. EMISSION STATEMENT 55
16. REPORTING OF MALFUNCTIONS 56
17. COMPLIANCE CERTIFICATION 56
18. SUBMISSIONS 57

SECTION D. SOURCE SPECIFIC REQUIREMENTS 57

1. FACILITY 57
2. GROUP 01 – BOILERS 63
3. GROUP 02 – PROCESS HEATERS 70
4. GROUP 03 – FLARE 85
5. GROUP 04 - LOADING FACILITIES AND CONTROL EQUIPMENT 91
6. GROUP 05 – SULFUR RECOVERY UNITS 93
7. GROUP 06 – REFINERY VOC, SOCMI VOC, & EXISTING REFINERY MACT, NSPS, OR NESHAP HAP COMPONENTS SUBJECT TO 40 CFR 60 SUBPART VV 96
8. GROUP 07 – SOCMI OR REFINERY NESHAP COMPONENTS, AND CERTAIN VOC COMPONENTS, SUBJECT TO 40 CFR 63 SUBPART H 114
9. GROUP 08 - EQUIPMENT VOC LEAK COMPONENTS NOT SUBJECT TO NSPS OR NESHAP 134
10. GROUP 09 – COOLING TOWERS 137
11. GROUP 10 – MISCELLANEOUS PROCESS VENTS (GROUP 1) SUBJECT TO 40 CFR 63 SUBPARTS G AND CC 139
12. GROUP 13A – TANKS SUBJECT TO 40 CFR 63 SUBPART G. 140
13. GROUP 13B – INTERNAL FLOATING ROOF TANKS SUBJECT TO 40 CFR 63, SUBPART CC 140
14. GROUP 13C – INTERNAL FLOATING ROOF TANKS SUBJECT TO 40 CFR 60, SUBPART KB 141
15. GROUP 14A – EXTERNAL FLOATING ROOF TANKS SUBJECT TO ONLY LOCAL AND STATE REGULATIONS 146
16. GROUP 14B – EXTERNAL FLOATING ROOF TANKS SUBJECT TO 40 CFR 63, SUBPART CC 146
17. GROUP 14C – EXTERNAL FLOATING ROOF TANKS SUBJECT TO 40 CFR 60, SUBPART KB (OR EQUIVALENT). 150
18. GROUP 15A – GROUP 2 STORAGE TANKS 151
19. GROUP 15B – FIXED ROOF TANKS SUBJECT TO 40 CFR 60 SUBPART KB RECORDKEEPING REQUIREMENTS 152
20. GROUP 17 – MARINE LOADING EQUIPMENT 152
21. GROUP 18 – FLUIDIZED CATALYTIC CRACKING UNITS 155
22. GROUP 19 - INTER-REFINERY PIPELINE EQUIPMENT 163
23. GROUP 20 – ALKYLATION 163
24. GROUP 21 – HYDROGEN PURIFICATION EQUIPMENT 168
25. GROUP 22 – DEGREASING VATS 169
26. GROUP 23 – BUTANE ISOMERIZATION 172
27. GROUP 25A – REFINING WASTEWATER 172
28. GROUP 25B – SOCMI WASTEWATER 191
29. GROUP 26 – BENZENE AND CUMENE PRODUCTION 200
30. GROUP 27 – EMERGENCY GENERATORS AND FIRE PUMPS 201
31. GROUP 28. INTERNAL COMBUSTION ENGINES 205

SECTION E. OPEN BURNING VARIANCE FOR TRAINING 210

SECTION F. NON APPLICABLE REQUIREMENTS 210

SECTION G. ALTERNATIVE MONITORING PROTOCOL FOR FLARES. 211

SECTION H. SUNOCO MARCUS HOOK REFINERY 255

City of Philadelphia
Department of Public Health
Air Management Services

Effective Date: July 18, 2014

Expiration Date: July 18, 2019

Replaces Permit No. V95-038

SECTION A. SOURCE IDENTIFICATION

In accordance with the provisions of the Pennsylvania Code Title 25, Philadelphia Code Title III, and Air Management Regulation (AMR) XIII, the Permittee (Permittee) identified below is authorized by Philadelphia Air Management Services (AMS) to operate the air emission source(s) listed in Table A-1. This facility is subject to all terms and conditions specified in this permit. Nothing in this permit relieves the Permittee from its obligations to comply with all applicable Federal, State and Local laws and regulations.

Facility:	Philadelphia Energy Solutions Refining and Marketing LLC
Owner:	Philadelphia Energy Solutions Refining and Marketing LLC
Location:	3144 Passyunk Avenue, Philadelphia, PA 19145
Mailing Address:	Same
SIC Code(s):	2911
Plant ID:	01501
Facility Contact:	Charles D. Barksdale Jr.
Phone:	(215) 339-2074
Permit Contact:	Charles D. Barksdale Jr.
Phone:	(215) 339-2074
Responsible Official:	James A. Keeler
Title:	General Manager

Edward Wiener, Chief of Source Registration

7/18/14
Date

TABLE A1-FACILITY INVENTORY LIST

ID Group	Source Name	Capacity	Fuel/Material^	Construction Date
Group 01 – Boilers and Heater				
CU-018 (GP)	#37 Boiler	495 MM Btu/hr	Refinery Gas	1952
CU-020 (GP)	#39 Boiler	495 MM Btu/hr	Refinery Gas	1952
CU-021 (GP)	#40 Boiler	660 MM Btu/hr	Refinery Gas	1954
Group 02 – Process Heaters				
CU-004 (GP)	Unit 1232 B-104 Heater	70 MM Btu/hr	Refinery Gas	1954
CU-005 (GP)	Unit 1332 H-1 Debutanizer Heater	45 MM Btu/hr	Refinery Gas	1958
CU-006 (GP)	Unit 1332 H-602 Heater	49 MM Btu/hr	Refinery Gas	1958
CU-007 (GP)	Unit 1332 H-601 Heater	48 MM Btu/hr	Refinery Gas	1958
CU-008 (GP)	Unit 1332 H-600 Heater (IDLED)	21.3 MM Btu/hr	Refinery Gas	1958
CU-009 (GP)	Unit 1332 H-2 Heater	60 MM Btu/hr	Refinery Gas	2005
CU-010 (GP)	Unit 1332 H-401 Heater	233 MM Btu/hr	Refinery Gas	1958
CU-011 (GP)	Unit 1332 H-400 Heater	186 MM Btu/hr	Refinery Gas	1958
CU-012 (GP)	Unit 1332 H-3 Heater	43 MM Btu/hr	Refinery Gas	1958
CU-013 (GP)	Unit 137 F-1 Heater	415 MM Btu/hr	Refinery Gas	1952
CU-014 (GP)	Unit 137 F-2 Heater	155 MM Btu/hr	Refinery Gas	1952
CU-015 (GP)	Unit 137 F-3 Heater	60 MM Btu/hr	Refinery Gas	1974
CU-016 (GP)	Unit 231 B-101 Heater	91 MM Btu/hr	Refinery Gas	1957
CU-017 (GP)	Unit 433 Isostripper H-1 Heater	260 MM Btu/hr	Refinery Gas	1973
CU-101 (PB)	Unit 210 H-101 Heater	183 MMBTU/hr	Refinery Gas	Dec-64
CU-102 (PB)	Unit 210 H-201 Heater	242 MMBTU/hr	Refinery Gas	May-73
CU-103 (PB)	Unit 210 13H-1 Heater	235.4 MMBTU/hr	Refinery Gas	May-73
CU-108 (PB)	Unit 860 2H-1 Heater (IDLED)	49.0 MMBTU/hr	Refinery Gas	Mar-67
CU-109 (PB)	Unit 860 2H-2 Heater	69.8 MMBTU/hr	Refinery Gas	Mar-67

CU-110 (PB)	Unit 860 2H-3 Heater	174.7 MMBTU/hr	Refinery Gas	Mar-67
CU-111 (PB)	Unit 860 2H-4 Heater	99.4 MMBTU/hr	Refinery Gas	Mar-67
CU-112 (PB)	Unit 860 2H-5 Heater	155 MMBTU/hr	Refinery Gas	Mar-67
CU-113 (PB)	Unit 860 2H-6 Heater (IDLED)	36.7 MMBTU/hr	Refinery Gas	Mar-67
CU-114 (PB)	Unit 860 2H-7 Heater	59 MMBTU/hr	Refinery Gas	Mar-67
CU-115 (PB)	Unti 860 2H-8 Heater	49.6 MMBTU	Refinery Gas	Mar-67
CU-118 (PB)	Unit 864 PH-1 Heater	80 MMBTU/hr	Refinery Gas	Aug-71
CU-123 (PB)	Unit 864 PH-7 Heater	45.5 MMBTU/hr	Refinery Gas	Aug-71
CU-124 (PB)	Unit 864 PH-11 Heater	74 MMBTU/hr	Refinery Gas	Aug-71
CU-125 (PB)	Unit 864 PH-12 Heater	85.1 MMBTU/hr	Refinery Gas	Aug-71
CU-126 (PB)	Unit 865 11H-1 Heater	72.2 MMBTU/hr	Refinery Gas	May-73
CU-127 (PB)	Unit 86511H-2 Heater	49.9 MMBTU/hr	Refinery Gas	May-73
CU-128 (PB)	Unit 866 12H-1 Heater	43 MMBTU/hr	Refinery Gas	May-73
CU-129 (PB)	Unit 868 8H-101 Heater Inc.	49.5 MMBTU/hr	Refinery Gas / Natural Gas	7/2003
CU-137 (PB)	Unit 870 (Tier II Low Sulfur Gas Hydrodesulfurization Plant), H1 Heater	97 MMBTU/hr	Refinery Gas / Natural Gas	2004
CU-138 (PB)	Unit 870 (Tier II Low Sulfur Gas Hydrodesulfurization Plant), H2 Heater	53 MMBTU/hr	Refinery Gas / Natural Gas	2004
CU-139	Unit 859 1H-1 Heater	98 MMBTU/hr	Refinery Gas / Natural Gas	2009

Group 03 - Flares

P-117 (GP) - CD012	1231 Flare – Unit 1232		RFG	1946
P-118 (GP) – CD013	1232 Flare – Unit 1232		RFG	Replaced 2005
P-119 (GP) - CD014	433 Flare		RFG	1972
P-642 (PB) CD111	Flare, North Flare in South Yard		RFG	Replaced 2004
P-643 (PB)	Flare, South Flare in South Yard		RFG	1973

CD112	(currently idled)			
P-646 (PB)	Flares (2), Emergency Sulfur Plant		RFG	Replaced 2005

Group 04 - Loading Facilities and Control Equipment

P-129 (GP)	1733 Tank Truck Loading – Cumene			
P-183 (GP)	Unit 1732 benzene railcar unloading station			
P-638 (PB)	Propane Loading Station			
CD-104	LPG Flare	Used by P-638		

Group 05 – Sulfur Recovery Units

P-659 (PB)	North Claus Sulfur Recovery Plant – Unit 867	100 tons/day		
P-660 (PB)	South Claus Sulfur Recovery Plant – Unit 867	100 tons/day		
CD-108	Amine Tail Gas Scrubber – Reduction Control System	Used by P-659 and P-660		
CD-109	Tail Gas Incinerator (TGU-1)	Used by P-659 and P-660		
CD-114	TGU 2			
~~CD-113~~	~~Backup Tail Gas Unit (BUTGU)~~	~~Used by P-659 and P-660~~		~~10/2002~~

Group 06 – Refinery VOC, SOCMI VOC, & Existing Refinery MACT, NSPS, or NESHAP HAP Components Subject to 40 CFR 60 Subpart VV

[40 CFR 60.480, 60.590, & 63.648; 25 Pa Code 129.58; AMR V Section XIII A., 40 CFR 61 Subpart J]

Group 07 – SOCMI or Refinery NESHAP Components, and Certain VOC Components Subject to 40 CFR 63 Subpart H

[40 CFR 63.160-182; 25 Pa Code 129.571; AMR V Section XIII A & B.]

Group 08 – Equipment VOC Leak Components Not Subject to NSPS or NESHAP

[25 Pa Code 129.58, Case-by-case RACT, 25 Pa Code §§129.91-129.95; AMR V Section XIII A.]

Group 09 – Cooling Towers

P-125 (GP)	Cooling Tower 1232 - Unit 1232	50,000 gallons per minute		
P-126 (GP)	Cooling Tower 433 - Unit 433			
P-127 (GP)	Cooling Tower 490 – Units 1332, 231, 1732, and 1733			
P-128 (GP)	Cooling Tower 137 – Unit 137			
P-632 (PB)	Cooling Tower, Unit 868	1,110,000		
P-633 (PB)	Cooling Tower, Unit 210	1,566,000		
P-634 (PB)	Cooling Tower, Unit 864	1,080,000		
P-635 (PB)	Cooling Tower, Complex	3,158,000		

Group 10 – Miscellaneous Process Vents (Group 1) subject to 40 CFR 63 Subparts G and CC

P-184 (GP)	Four vents [one goes to CD-006, and three go to a process heater (CD-006) or to CD-012 or CD-013]	1.Fuel gas from E-401 absorber at Unit 231: controlled to a flare per 63.643(a)(1) 2. Off gas from sour water stripper 8733: controlled to a flare per 63.643(a)(1) 3.Off gas from Merox unit at Unit 433: controlled via heater or flare 4. Vacuum tower off gas at Unit 137 via heater		
CD-006	F-1 Heater	Used by P-184		
P-181	Six vents (go to CD-012 or CD-013)	1. Steam use in UE6, UE12, UE24 2. P004 3. Part of sources P-123 and P-114 4. Extractor Tower PCV, Extractor receiver vent, Water		

		receiver vent, Solvent Regen Ejector vent, Deprop overhead vent, Benzene recycle tower vent 5. Part of source P-115		
P-1002 (PB)	Group 1 Vents 40 CFR 63, Subpart CC	Vents at 210 Unit A/B Vacuum Tower		

Group 13A – Tanks Subject to 40 CFR 63 Subpart G

P-001 (GP)	T-1116, EFR	>40M Gal	Naphtha	1953
P-005 (GP)	T-217, IFR	>40M Gal	Benzene	1991
P-017 (GP)	T-790, IFR	>40M Gal	Benzene	1962
P-018 (GP)	T-791, IFR	>40M Gal	Benzene	1962
P-021 (GP)	T-795, IFR	>40M Gal	Clay Tower BTX	1973
P-022 (GP)	T-798, IFR	>40M Gal	Benzene	1964
P-023 (GP)	T-799, IFR	>40M Gal	Benzene	1964
P-024 (GP)	T-1117, EFR	>40M Gal	Benzene/Toluene	1953
P-025 (GP)	T-1205, IFR	>40M Gal	Benzene	1972
P-029 (GP)	T-1214, IFR	>40M Gal	Benzene	1961
P-523 (PB)	Tank # 121, IFR	>40M Gal	Benzene/Toluene	1940

Group 13B - Internal Floating Roof Tanks subject to 40 CFR 63, Subpart CC

P-012 (GP)	T-272, IFR	>40M Gal	Crude Oil	1971
P-015 (GP)	T-285, IFR	>40M Gal	Naphtha	1971
P-016 (GP)	T-286, IFR	>40M Gal	Naphtha	1948
P-034 (GP)	T-276, IFR	>40M Gal	Naphtha	1945
P-538 (PB)	T-172	>40M Gal	Gasoline	
P-545 (PB)	Tank #190, IFR	>40M Gal	Reformer Feed	1950
P-547 (PB)	Tank #204, IFR	>40M Gal	Dewatering	1931

Group 13C – Internal Floating Roof Tanks Subject to 40 CFR 60, Subpart Kb

P-009 (GP)	T-250, IFR	>40M Gal	Naphtha/Furnace Oil	1988
P-010 (GP)	T-251, IFR	>40M Gal	Naphtha	1993
P-134 (GP)	T-270, IFR	>40M Gal	Recovered Oil	1992
P-135 (GP)	T-767, IFR	>40M Gal	Recovered Oil	1992
P-136 (GP) (temp inactive)	T-768, IFR	>40M Gal	Recovered Oil	1994
P-137 (GP)	T-1101, IFR	>40M Gal	Recovered Oil	2011
P-159 (GP)	T-1086	>40M Gal	Spent caustic	1954
P-160 (GP)	T-1087	>40M Gal	Spent caustic	1954
P-174 (GP)	T-1007	>40M Gal	RCRA CC waste	1990
P-501 (PB)	Tank # 26, IFR	>40M Gal	Ethanol	1995
P-511 (PB)	Tank # 37, IFR	>40M Gal	Gasoline	1994

Group 14A – External Floating Roof Tanks Subject to only Local and State Regulations

Group 14B – External Floating Roof Tanks Subject to 40 CFR 63, Subpart CC

P-502 (PB)	Tank # 27, EFR	>40M Gal	Gasoline components	1976
P-503 (PB)	Tank # 28, EFR	>40M Gal	Alkylate	1958
P-504 (PB)	Tank # 29, EFR	>40M Gal	Reformate	1955
P-507 (PB)	Tank # 33, EFR	>40M Gal	Gasoline	1956
P-508 (PB)	Tank # 34, EFR	>40M Gal	Gasoline	1954
P-509 (PB)	Tank # 35, EFR	>40M Gal	Gasoline	1954
P-512 (PB)	Tank # 38, EFR	>40M Gal	Gasoline	1959
P-513 (PB)	Tank # 39, EFR	>40M Gal	Gasoline	1955

P-514 (PB)	Tank # 40, EFR	>40M Gal	Gasoline	1982
P-521 (PB)	Tank #117, EFR (also subject to NSPS Subpart Ka – less stringent)	>40M Gal	Recovered Oil	1981
P-525 (PB)	Tank # 126, EFR	>40M Gal	Reformer Feed	1955
P-526 (PB)	Tank # 128, EFR	>40M Gal	Reformate	1959
P-527 (PB)	Tank # 129, EFR	>40M Gal	Reformate	1971
P-537 (PB)	Tank # 162, EFR	>40M Gal	Gasoline	1908
P-540 (PB)	Tank # 176, EFR	>40M Gal	Reformer Feed	1967
P-541 (PB)	Tank # 178, EFR	>40M Gal	Gasoline Blending Components	1974
P-542 (PB)	Tank #179, EFR	>40M Gal	Reformer Feed	1974
P-546 (PB)	Tank #191, EFR	>40M Gal	Crude Oil	1958
P-579 (PB)	Tank #826, EFR	>40M Gal	Crude Oil	2002
P-587 (PB)	Tank #840, EFR	>40M Gal	Crude Oil	1953
P-588 (PB)	Tank #841, EFR	>40M Gal	Crude Oil	1953
P-590 (PB)	Tank #843, EFR	>40M Gal	Crude Oil	1954
P-594 (PB)	Tank #847, EFR	>40M Gal	Crude Oil	1954
P-599 (PB)	Tank #881, EFR	>40M Gal	Crude Oil	1958
P-600 (PB)	Tank #882, EFR	>40M Gal	Crude Oil	1959
P-601 (PB)	Tank #883, EFR	>40M Gal	Crude Oil	1961
P-602 (PB)	Tank #884, EFR	>40M Gal	Crude Oil	1974
P-603 (PB)	Tank #885, EFR	>40M Gal	Crude Oil	1974
P-604 (PB)	Tank #886, EFR	>40M Gal	Crude Oil	1974

Group 14C – External Floating Roof Tanks Subject to 40 CFR 60 Subpart Kb Requirements (or equivalent)

P-006 (GP)	T-228, EFR		Stormwater/Process Water	1991
P-155 (GP)	T-844	>40M Gal	#2 sep. water	1976
P-162 (GP)	T-1136	>40M Gal	#4 sep. water	1976
P-624 (PB)	Tank # 7300, EFR	NA	Stormwater/Process Water	1992
P-627 (PB)	Tank #7308, EFR	NA	Stormwater/Process Water	1972

Group 15A – Group 2 Storage Tanks

P-002 (GP)	T-1216, IFR	>40M Gal	Cumene	1975
P-003 (GP)	T-1217, IFR	>40M Gal	Cumene	1961
P-019 (GP)	T-792, Fixed Roof	>40M Gal	Cumene	1962
P-020 (GP)	T-793, Fixed Roof	>40M Gal	Cumene	1962
P-027 (GP)	T-1211, Fixed Roof	>40M Gal	Cumene	1960
P-028 (GP)	T-1213, Fixed Roof	>40M Gal	Cumene	1960
P-030 (GP)	T-1215, Fixed Roof	>40M Gal	Cumene	1961
P-031 (GP)	T-1219, Fixed Roof	>40M Gal	Cumene	1961
P-032 (GP)	T-273, Fixed Roof	>40M Gal	Cat Charge Stock	1941
P-035 (GP)	T-280, Fixed Roof	>40M Gal	Cat Charge Stock	1947
P-036 (GP)	T-282, Fixed Roof	>40M Gal	Low Sulfur Diesel	1947
P-037 (GP)	T-284, Fixed Roof	>40M Gal	Low Sulfur Diesel	1948
P-039 (GP)	T-494, Fixed Roof	>40M Gal	Cutting Oil	1965
P-144 (GP)	T-219	>40M Gal	Cutter stock	1925
P-146 (GP)	T-225	>40M Gal	Non-Commercial # 6 oil	1973
P-147 (GP)	T-227	>40M Gal	Non-Commercial # 6 oil	1954
P-150 (GP)	T-281	>40M Gal	Cat charge stock	1946
P-151 (GP)	T-676	>40M Gal	Non-Commercial # 6 oil	1953
P-153 (GP)	T-794	>40M Gal	Wet glycol solvent	1990
P-154 (GP)	T-796	16.8M Gal	Glycol solvent	1962
P-157 (GP)	T-1038	>40M Gal	Non-Commercial # 6 oil	1972
P-166 (GP)	T-1218	>40M Gal	Cumene	1960
P-167 (GP)	T-1220	>40M Gal	Cumene	1963
P-175 (GP)	T-3000	500 gal	Lube Oil	NA
P-176 (GP)	T-3001	500 gal	Lube Oil	
P-177 (GP)	T-3002	1000 gal	Lube Oil	
P-178 (GP)	T-3004	1000 gal	Lube Oil	
P-179 (GP)	T-3005	500 gal	Lube Oil	
P-515 (PB)	Tank # 42, Cone Roof	>40M Gal	Diesel	2013
P-516 (PB)	Tank # 43, Cone Roof	>40M Gal	Jet/Kero	1958
P-518 (PB)	Tank # 83, Cone Roof	>40M Gal	Super K-1	1950

P-519 (PB)	Tank # 84, Cone Roof	>40M Gal	Jet/Kero	1950
P-520 (PB)	Tank # 85, Cone Roof	>40M Gal	LS Diesel	1955
P-529 (PB)	Tank # 144, Cone Roof	>40M Gal	Main Fract Bottoms	1994
P-530 (PB)	Tank # 145, Cone Roof	>40M Gal	Main Fract Bottoms	1994
P-534 (PB)	Tank # 151, EFR	>40M Gal	Cracking Stocks	1979
P-535 (PB)	Tank # 152, Cone Roof	>40M Gal	Cracking Stocks	1959
P-551 (PB)	Tank #253, Cone Roof	>40M Gal	Heating Oil	1923
P-563 (PB)	Tank #663, Cone Roof	>40M Gal	Asphalt/Cracking Stocks	1959
P-565 (PB)	Tank #666, Cone Roof	>40M Gal	Cracking Stocks	1954
P-567 (PB)	Tank #668, Cone Roof	>40M Gal	Wash Oil	1957
P-571 (PB)	Tank #672, Cone Roof	>40M Gal	Cracking Stocks (Light Cycle Oil)	1957
P-574 (PB)	Tank #821, IFR	>40M Gal	Cracking Stocks	1941
P-575 (PB)	Tank #822, IFR	>40M Gal	Dewatering	1941
P-576 (PB)	Tank #823, Cone Roof	>40M Gal	Cracking Stocks (Low Sulfur Diesel)	1941
P-577 (PB)	Tank #824, Cone Roof	>40M Gal	Cracking Stocks	1941
P-578 (PB)	Tank #825, Cone Roof	>40M Gal	Heating Oil	1954
P-580 (PB)	Tank #831, EFR	>40M Gal	Jet/Kero	1943
P-582 (PB)	Tank #833, IFR	>40M Gal	Cracking Stocks	1950
P-584 (PB)	Tank #835, IFR	>40M Gal	Med Distillate	1953
P-585 (PB)	Tank #836, IFR	>40M Gal	Med Distillate	1954
P-623 (PB)	Tank #7275, Open Top	>40M Gal	Wastewater (Stormwater)	1952
P - (433)	Tank #1051, EFR	>40MGal	Spent Potassium Chloride	

Group 15B – Fixed Roof Tanks Subject to Subpart Kb Recordkeeping Requirements

P-158 (GP)	T-1039	>40M Gal	Non-Commercial # 6 oil	1989
P-171 (GP)	T-1004	>40M Gal	RCRA misc waste	1989
P-172 (GP)	T-1005	>40M Gal	RCRA misc waste	1989

Group 17 – Marine Loading Equipment

P-130 (GP)	Barge Loading – Girard Point			

	Wharf			
CD-011	Flare for P130	Used by P-130		
P-636 (PB)	Marine Barge Loading			

Group 18 – Fluidized Catalytic Cracking Units

P-120 (GP)	FCCU, Unit 1232 Regenerator			1964
CD-004	CO Boiler	580 MMBTU/Hr Used by P-120		
	1232 SCR	Used by P-120		
	Wet Gas Scrubber	Used by P-120		
P-661 (PB)	Fluid Catalytic Cracking Regenerator – Unit 868	47,500 bbl/day on 365 day avg, max 50,000 bbl/any given day		
CD-110	Electrostatic Precipitator	Used by P-661		

Group 19 – Inter-Refinery Pipeline Equipment

P-664 (PB)	Inter-Refinery Pipeline			

Group 20 – Alkylation Unit

P-182 (GP)	Alkylation Unit 433 (Refinery Process Unit)			
CD-014	Flare (Unit 433)	Used by P-182		
P-662 (PB)	Alkylation Unit 869			
CD-111 (P-642)	North Flare South Yard	Used by P-662		
CD-112	South Flare South Yard (idled)	Used by P-662		

Group 21 – Hydrogen Purification

P-674 (PB)	H2 Purification			

Group 22 – Degreasing Vats

P-108 (GP)	Degreasing Vats		Degreaser	NA
(PB)	Machine/Fab Shop - Agitating Parts Washer Model 81	65 gal	SK Premium Solvent, Petroleum Distillates, 100 % VOC, 02 mmHg, MSDS 82658	
(PB)	Machine/Fab Shop - Agitating Parts Washer Model 81	65 gal	SK Premium Solvent, Petroleum Distillates, 100 % VOC, 02 mmHg, MSDS 82658	
(PB)	Machine/Fab Shop – Model SK 34.1R	25 gal	SK Premium Solvent, Petroleum Distillates, 100 % VOC, 02 mmHg, MSDS 82658	
(GP)	Garage – Model E3000	10 gal	SK Premium Solvent, Petroleum Distillates, 100 % VOC, 02 mmHg, MSDS 82658	
(GP)	Bundle Pad – 22 x 6 x 4 Bundle Cleaner	2960 gal	Diesel Fuel	
(GP)	Bundle Pad – 22 x 6 x 4 Bundle Cleaner	4578 gal	Diesel Fuel	
(GP)	3 Boiler House - Agitating Parts Washer Model 81	65 gal	SK Premium Solvent, Petroleum Distillates, 100 % VOC, 02 mmHg, MSDS 82658	
(GP)	3 Boiler House - Agitating Parts Washer Model 81	65 gal	SK Premium Solvent, Petroleum Distillates, 100 % VOC, 02 mmHg, MSDS 82658	
(GP)	I&E Bldg – Model 250 Recycling Parts Washer	20 gal	SK Premium Gold Solvent, MSDS 82655 / 82774	

Group 23 – Butane Isomerization

P-121 (GP)	Butane Isomerization - Unit 331			

Group 25A – Refining Wastewater

P-131 (GP)	4A API Separator – WWT			
CD-002	Carbon Adsorber	Used by P-131		
P-132 (GP)	2B API Separator – WWT			
CD-003	Carbon Adsorber	Used by P-132		
P-639 (PB)	API Separators A&B – Bio Plant			
CD-105	Carbon Adsorption	Used by P-639		
P-114 (GP)	Wastewater – Subject to or exempt from 40 CFR 61 Subpart FF and 40 CFR 63, Subpart CC			
CD-010	Carbon Adsorber	Used by P-114		
P-640 (PB)	Dissolved Nitrogen Floatation Unit A&B – Bio Plant			
CD-106	Carbon Adsorption	Used by P-640		
P-641 (PB)	Bio Plant Sewer System – Refinery			
CD-107	Carbon Adsorption	Used by P-641		
P-667 (PB)	Benzene Wastewater Sources 40 CFR 61, Subpart FF & 40 CFR 63, Subpart CC			
P-141 (GP)	T-1146, T-1147	Roughing Filters at WWTP	Wastewater	NA
CD-007	Carbon Adsorber	Used by P-141		
P-142 (GP)	T-1142, T-1143	Oxidation Tanks at WWTP	Wastewater	NA

Group 25B – SOCMI Wastewater

P-123	SOCMI Wastewater			
P-115	Refining Wastewater			
P-180 (GP)	Cumene Production Unit 1733			
P-181 (GP)	Benzene Production Unit 1732			

Group 26 – Benzene and Cumene Production

P-180 (GP)	Cumene Production Unit 1733			

P-181 (GP)	Benzene Production Unit 1732			
UV-15	Regenerator Bottoms Process Vent			
CUV-12	DIBP Overhead Receiver Process Vent			
CUV-312	Cumene "C" Tower Receiver Process Vent			

Group 27 – Emergency Generator and Fire Pump

EM-001	Caterpillar (model 3412DITTA) Emergency Generator	896 HP	Diesel	2004
FP-010	24PEN4 Fire Pump #4	211 Hp	Diesel	2011
FP-011	24P1 Fire Engine (Haenn's Wharf)	210 Hp	Diesel	2012
FP-012	Fire Pump (1st and Wharf #8)	475 bhp	ULSD	
FP-013	24P2 North Fire Pump (Haenn's Wharf)	210 bhp	ULSD	
FP-014	24P3 South Fire Pump (Short Pier)	350	ULSD	
FP-015	24PEN5 Fire Pump (North Yard)	250 bhp	ULSD	
FP-016	24PEN6 Fire Pump (North Yard Wharf)	250 bhp	ULSD	
FP-017	28P-1150A HF Mitigation Water Pump FP-12#1 (Unit 433)	487 bhp	ULSD	
FP-018	28P-1150B HF Mitigation Water Pump FP+12 #2 (Unit 433)	487 bhp	ULSD	
FP-019	Belmont Firehouse Williams Pump (fire pump) affixed to a trailer	750 bhp	ULSD	

Group 28 – Internal Combustion Engines

IC-002	53P-800C pump	200 bhp	Diesel	
IC-005	FE-5(2) Flood Control Pump Driver	28 bhp	Diesel	
IC-006	Godwin 894572/4 Flood Control Pump Driver	115 bhp	Diesel	
IC-007	B-2623 Flood Control Pump Driver	102 bhp	Diesel	
IC-008	Engine Set 1290 (northside of 8 Sep)	214 bhp	Diesel	
rIC-001	Rental back-up pump (2nd &1st, 3BH sump)	≤ 14 bhp	Diesel	
rIC-002	Rental back-up air compressor (small maintenance air compressors)	≤ 55 bhp	Diesel	
rIC-003	Rental back-up air compressor (small maintenance air compressors)	≤ 55 bhp	Diesel	
rIC-004	Rental back-up air compressor (small maintenance air compressors)	≤ 55 bhp	Diesel	
rIC-005	Rental back-up air compressor (small maintenance air compressors)	≤ 101 bhp	Diesel	
rIC-006	Rental back-up air compressor (small maintenance air compressors)	≤ 101 bhp	Diesel	
rIC-007	Rental back-up pump (WW pump 270 Tk to WWTP)	≤ 144 bhp	Diesel	

Group 29 - Stacks

S-111 (GP)	Used by CU-004, B-104 HTR			
S-112 (GP)	Used by CU-005, H-1 Debutanizer HTR			
S-113 (GP)	Used by CU-006, H-602 HTR			
S-114 (GP)	Used by CU-007, H-601 HTR			
S-115 (GP)	Used by CU-008, H-600 HTR			
S-116 (GP)	Used by CU-009, H-2 HTR			
S-117 (GP)	Used by CU-010, H-401 HTR			
S-117A (GP)	Used by CU-010, H-401 HTR	Back-up stack (dampers normally closed)		
S-117B (GP)	Used by CU-010, H-401 HTR	Back-up stack (dampers normally closed)		
S-117C (GP)	Used by CU-010, H-401 HTR	Back-up stack (dampers normally closed)		
S-118 (GP)	Used by CU-011, H-400 HTR			
S-118A (GP)	Used by CU-011, H-400 HTR	Back-up stack (dampers normally closed)		
S-118B (GP)	Used by CU-011, H-400 HTR	Back-up stack (dampers normally closed)		
S-118C (GP)	Used by CU-011, H-400 HTR	Back-up stack (dampers normally closed)		
S-119 (GP)	Used by CU-012, H-3 HTR			
S-120 (GP)	Used by CU-013, F-1 HTR Used by CU-014, F-2 HTR			
S-122 (GP)	Used by CU-015, F-3 HTR			
S-123A (GP)	Used by CU-016, B-101 HTR			
S-123B (GP)	Used by CU-016, B-101 HTR			
S-123C (GP)	Used by CU-016, B-101 HTR			
S-124 (GP)	Used by CU-017, H-1 Iso Stripper Heater			
S-125 (GP)	Used by CU-018, 37 Boiler Used by CU-020, 39 Boiler			

	Used by CU-021, 40 Boiler			
S-131 (GP)	Used by P-131, 4A API Separator Unit – WWT			
S-132 (GP)	Used by P-132, 2B API Separator Unit – WWT			
S-133 (GP)	Used by CD-004 FCCU/CO Boiler			
S-134 (GP)	Used by P-121 Butane Isomerization			
S-138 (GP)	Used by P-125, 1232 Cooling Tower			
S-139 (GP)	Used by P-126, 433 Cooling Tower			
S-140 (GP)	Used by P-127, 490 Cooling Tower			
S-141 (GP)	Used by P-128, 137 Cooling Tower			
S-142 (GP)	Used by P-129, 1733 Loading Rack			
S-143 (GP)	Used by P-130, Barge Loading – Girard Point Wharf			
S-144 (GP)	Used by P-108 Degreasing Vats			
S-145 (GP)	Used by P-109, 40 CFR 60, Subpart GGG Leaks			
S-146 (GP)	Used by P-110, 40 CFR 63, Subpart CC Leaks			
S-147 (GP)	Used by P-111, 40 CFR 63, Subpart H Leaks			
S-148 (GP)	Used by P-112, 40 CFR 63, Subpart J			
S-149 (GP)	Used by P-113, 29 PA 129.58 Equipment Leaks			
S-150 (GP)	Used by P-114, 40 CFR 61,			

	Subpart FF Wastes			
S-151 (GP)	Used by P-115, Miscellaneous Wastewater			
S-153 (GP)	Used by P-117, 1231 Flare			
S-154 (GP)	Used by P-118, 1232 Flare			
S-155 (GP)	Used by P-119, 433 Flare			
S-156 (GP)	Used by P-120, 1232 FCCU			
S-200 (GP)	Used by P-001, T-1116			
S-201 (GP)	Used by P-002, T-1216			
S-202 (GP)	Used by P-003, T-1217			
S-204 (GP)	Used by P-005, T-217			
S-205 (GP)	Used by P-006, T-228			
S-208 (GP)	Used by P-009, T-250			
S-209 (GP)	Used by P-010, T-251			
S-211 (GP)	Used by P-012, T-272			
S-214 (GP)	Used by P-015, T-285			
S-215 (GP)	Used by P-016, T-286			
S-216 (GP)	Used by P-017, T-790			
S-217 (GP)	Used by P-018, T-791			
S-218 (GP)	Used by P-019, T-792			
S-219 (GP)	Used by P-020, T-793			
S-220 (GP)	Used by P-021, T-795			
S-221 (GP)	Used by P-022, T-798			
S-222 (GP)	Used by P-023, T-799			
S-223 (GP)	Used by P-024, T-1117			
S-224 (GP)	Used by P-025, T-1205			
S-226 (GP)	Used by P-027, T-1211			
S-227 (GP)	Used by P-028, T-1213			
S-228 (GP)	Used by P-029, T-1214			
S-229 (GP)	Used by P-030, T-1215			
S-230 (GP)	Used by P-031, T-1219			
S-231 (GP)	Used by P-032, T-273			

S-232 (GP)	Used by P-033, T-275			
S-233 (GP)	Used by P-034, T-276			
S-234 (GP)	Used by P-035, T-280			
S-235 (GP)	Used by P-036, T-282			
S-236 (GP)	Used by P-037, T-284			
S-238 (GP)	Used by P-039, T-494			
S-242 (GP)	Used by P-043, T-291			
S-243 (GP)	Used by P-044, T-292			
S-244 (GP)	Used by P-045, T-229			
S-245 (GP)	Used by P-134, T-270			
S-246 (GP)	Used by P-135, T-767			
S-247 (GP)	Used by P-136, T-768			
S-248 (GP)	Used by P-137, T-1101			
S-252 (GP)	Used by P-141, Two roughing filters (110 and 111)			
S-253 (GP)	Used by P-142, Two oxidation tanks (101 and 102)			
S-254 (GP)	Used by P-143, 1732 and 1733 Plant Accumulators			
S-801 (PB)	Used by CU-101, Unit 210A, HTR H201			
S-802 (PB)	Used by CU-102, Unit 210B, HTR H201			
S-803 (PB)	Used by CU-103, Unit 210C, HTR 13H1			
S-804 (PB)	Not in use			
S-805 (PB)	Not in use			
S-806 (PB)	Not in use			
S-807 (PB)	Used by CU-108, Unit 860, HTR 2H1 Used by CU-109, Unit 860, HTR 2H2 Used by CU-111, Unit 860, HTR			

	2H4			
S-808 (PB)	Used by CU-108, Unit 860, HTR 2H1 Used by CU-109, Unit 860, HTR 2H2 Used by CU-111, Unit 860, HTR 2H4			
S-809 (PB)	Used by CU-110, Unit 860, HTR 2H3 Used by CU-112, Unit 860, HTR 2H5			
S-810 (PB)	Used by CU-110, Unit 860, HTR 2H3 Used by CU-112, Unit 860, HTR 2H5			
S-811 (PB)	Used by CU-113, Unit 860, HTR 2H6			
S-812 (PB)	Used by CU-114, Unit 860, HTR 2H7			
S-813 (PB)	Used by CU-115, Unit 860, HTR 2H8			
S-818 (PB)	Used by CU-118, Unit 864, HTR PH1			
S-822 (PB)	Used by CU-123, Unit 864, HTR PH7			
S-823 (PB)	Used by CU-124, Unit 864, HTR PH11			
S-824 (PB)	Used by CU-125, Unit 864, HTR PH12			
S-825 (PB)	Used by CU-126, Unit 865, HTR 11H1			
S-826 (PB)	Used by CU-127, Unit 865, HTR			

	11H2			
S-827 (PB)	Used by CU-128, Unit 865, HTR 12H1			
S-828 (PB)	Used by CU-129, FCCU 868, HTR 8H101			
S-829 (PB)	Used by CU-130, H1 Heater			
S-836 (PB)	Used by P-501, Tank #26			
S-837 (PB)	Used by P-502, Tank #27			
S-838 (PB)	Used by P-503, Tank #28			
S-839 (PB)	Used by P-504, Tank #29			
S-840 (PB)	Used by P-505, Tank #30			
S-842 (PB)	Used by P-507, Tank #33			
S-843 (PB)	Used by P-508, Tank #34			
S-844 (PB)	Used by P-509, Tank #35			
S-845 (PB)	Used by P-510, Tank #36			
S-846 (PB)	Used by P-511, Tank #37			
S-847 (PB)	Used by P-512, Tank #38			
S-848 (PB)	Used by P-513, Tank #39			
S-849 (PB)	Used by P-514, Tank #40			
S-850 (PB)	Used by P-515, Tank #42			
S-851 (PB)	Used by P-516, Tank #43			
S-853 (PB)	Used by P-518, Tank #83			
S-854 (PB)	Used by P-519, Tank #84			
S-855 (PB)	Used by P-520, Tank #85			
S-856 (PB)	Used by P-521, Tank #117			
S-858 (PB)	Used by P-523, Tank #121			
S-859 (PB)	Used by P-524, Tank #125			
S-860 (PB)	Used by P-525, Tank #126			
S-861 (PB)	Used by P-526, Tank #128			
S-862 (PB)	Used by P-527, Tank #129			
S-864 (PB)	Used by P-529, Tank #144			
S-865 (PB)	Used by P-530, Tank #145			

S-869 (PB)	Used by P-534, Tank #151			
S-870 (PB)	Used by P-535, Tank #152			
S-872 (PB)	Used by P-537, Tank #162			
S-873 (PB)	Used by P-538, Tank #172			
S-875 (PB)	Used by P-540, Tank #176			
S-876 (PB)	Used by P-541, Tank #178			
S-877 (PB)	Used by P-542, Tank #179			
S-880 (PB)	Used by P-545, Tank #190			
S-881 (PB)	Used by P-546, Tank #191			
S-882 (PB)	Used by P-547, Tank #204			
S-886 (PB)	Used by P-551, Tank #253			
S-902 (PB)	Used by P-567, Tank #668			
S-906 (PB)	Used by P-571, Tank #672			
S-909 (PB)	Used by P-574, Tank #821			
S-910 (PB)	Used by P-575, Tank #822			
S-911 (PB)	Used by P-576, Tank #823			
S-912 (PB)	Used by P-577, Tank #824			
S-913 (PB)	Used by P-578, Tank #825			
S-914 (PB)	Used by P-579, Tank #826			
S-915 (PB)	Used by P-580, Tank #831			
S-917 (PB)	Used by P-582, Tank #833			
S-919 (PB)	Used by P-584, Tank #835			
S-920 (PB)	Used by P-585, Tank #836			
S-922 (PB)	Used by P-587, Tank #840			
S-923 (PB)	Used by P-588, Tank #841			
S-924 (PB)	Used by P-589, Tank #841			
S-929 (PB)	Used by P-594, Tank #847			
S-934 (PB)	Used by P-599, Tank #881			
S-935 (PB)	Used by P-600, Tank #882			
S-936 (PB)	Used by P-601, Tank #883			
S-937 (PB)	Used by P-602, Tank #884			
S-938 (PB)	Used by P-603, Tank #885			

S-939 (PB)	Used by P-604, Tank #886			
S-958 (PB)	Used by P-623, Tank #7275			
S-959 (PB)	Used by P-624, Tank #7300 – Bio Plant			
S-962 (PB)	Used by P-627, Tank #7308 – Bio Plant			
S-963 (PB)	Used by P-628, Tank #7309 – South Yard			
S-966 (PB)	Used by P-632, Cooling Tower – Unit 868			
S-967 (PB)	Used by P-633, Cooling Tower – Unit 210			
S-968 (PB)	Used by P-634, Cooling Tower – Unit 864			
S-969 (PB)	Used by P-635, Cooling Tower – Complex Unit			
S-970 (PB)	Used by P-636, Barge Loading			
S-972 (PB)	Used by P-638, Rail Car Loading			
S-973 (PB)	Used by P-639, Bio Plant DNF Unit A&B			
S-974 (PB)	Used by P-640, Bio Plant Sewer System			
S-975 (PB)	Used by P-641, Bio Plant Sewer System			
S-976 (PB)	Used by P-642, North Flare in South Yard			
S-977 (PB)	Used by P-643, South Flare in South Yard Used by P-662, 869 Alkylation Unit			
S-978 (PB)	Used by P-638, LPG Rail Car and Tank Truck			

	Loading/Unloading			
S-980 (PB)	Used by P-646, Two Emergency Sulfur Plant Flare (Unit 867)			
S-983 (PB)	Used by P-659 and P-660, North and South Claus Sulfur Recovery Plant (Unit 867)			
	TGU -2			
S-985 (PB)	Used by P-661, FCCU (Unit 868)			
S-986 (PB)	Used by P-662, Alkylation Unit 869			
S-987 (PB)	Used by P-664, Inter-refinery Pipeline			
S-988 (PB)	Used by P-665, 40 CFR 60, Subpart GGG Leaks			
S-990 (PB)	Used by P-667, 40 CFR 61, Subpart FF Wastes			
S-994 (PB)	Used by P-671, 25 PA Code 129.58 Equipment Leaks			
S-996 (PB)	Used by P-670, 40 CFR 61, Subpart J Equipment Leaks			
S-997 (PB)	Used by P-674, Hydrogen Purification Unit 861			
S-8701 (PB)	Used by CU-137 (Unit 870 H1 heater)			
S-8702 (PB)	Used by CU-138 (Unit 870 H2 heater)			
S3412 (PB)	Used by EM-001			

Group IN - Insignificant Activities

P-044 (GP)	T-292, IFR (used for odor control	Not in VOL Service	Sour Water	1945

(PB)	Garage – Brake Cleaner Model 26.1	2 gal	Aqueous Brake Cleaner, Armakleen MPC MSDS 82783	
(GP)	Garage – Brake Cleaner Model 26.1	2 gal	Aqueous Brake Cleaner, Armakleen MPC MSDS 82783	

^ - RFG (Refinery Fuel Gas) or Refinery Gas means either refinery gas or natural gas or any mixture thereof.

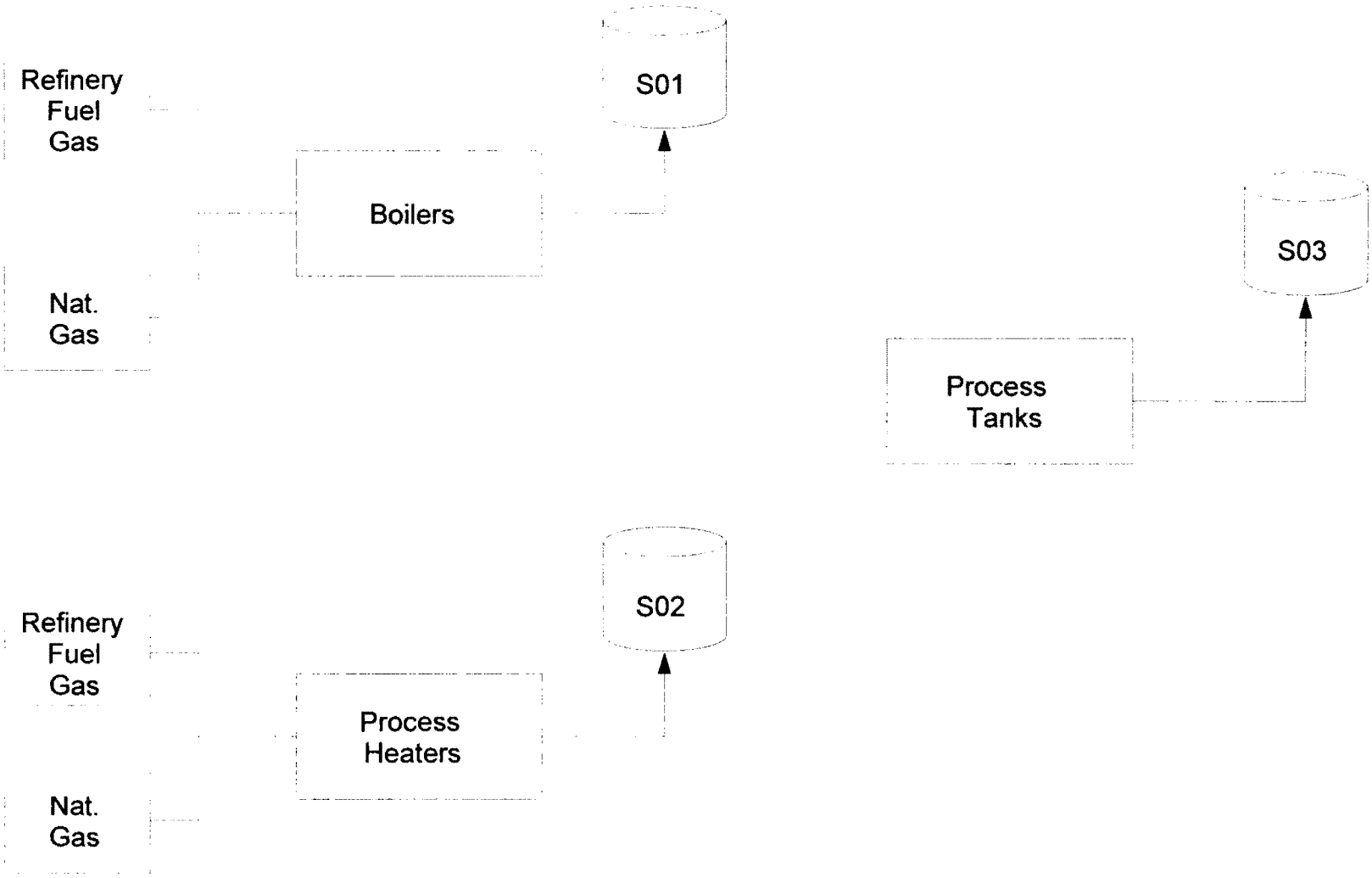
Refinery Fuel Gas
Nat. Gas
Boilers
S01
Process Tanks
S03
Refinery Fuel Gas
Nat. Gas
Process Heaters
S02

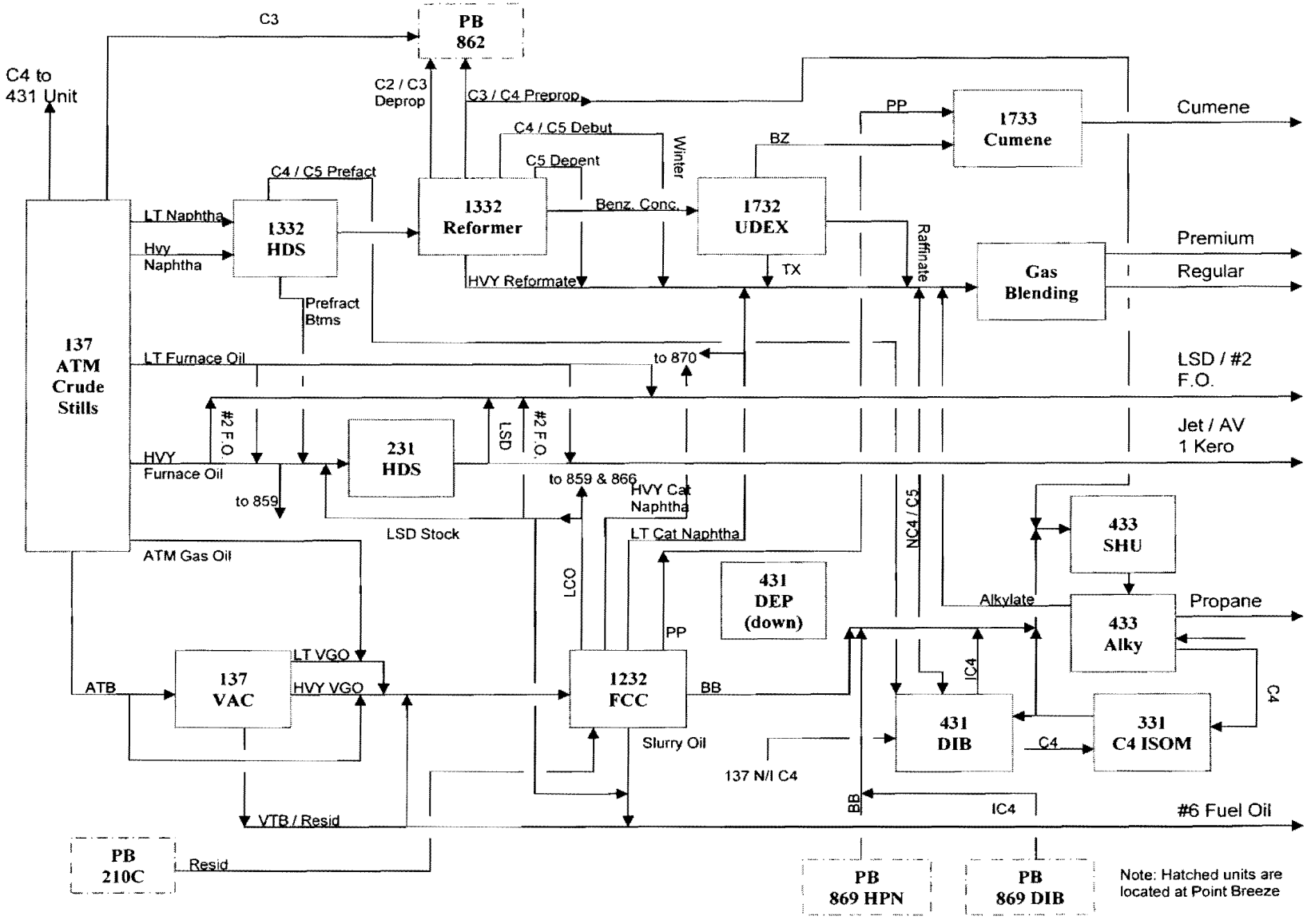

PROCESS FLOW DIAGRAM FOR THE SUNOCO PHILADELPHIA REFINERY GIRARD POINT

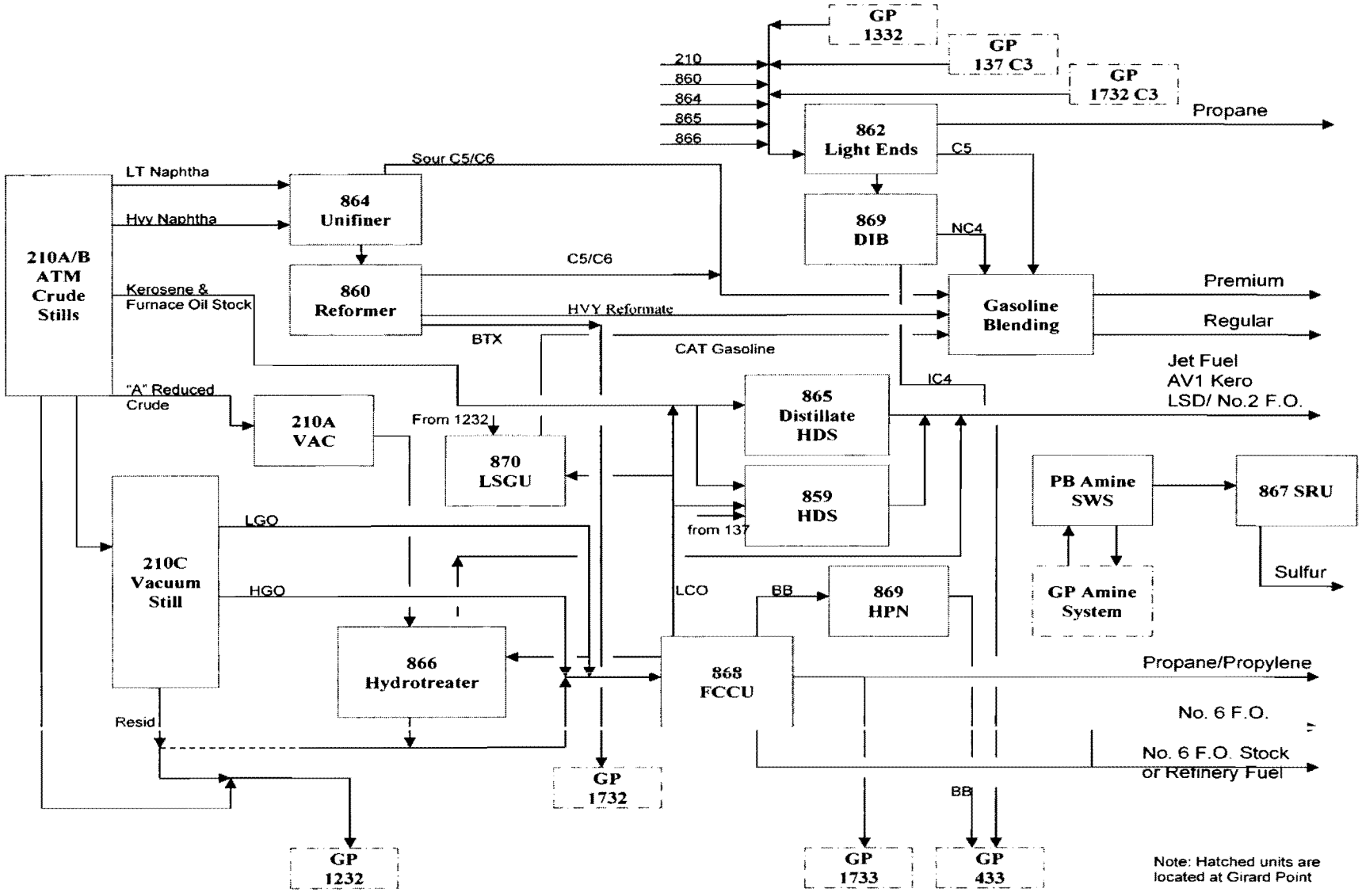

PROCESS FLOW DIAGRAM FOR THE SUNOCO PHILADELPHIA REFINERY POINT BREEZE

FACILITY INVENTORY INDEX

CD-002	Adsorber	Group 25A
CD-003	Adsorber	Group 25A
CD-004	CO Boiler	Group 18
CD-005	Electrostatic Precipitator	Group 18
CD-006	F-1 Heater	Group 10
CD-007	Adsorber	Group 25A
CD-010	Carbon Adsorber	Group 25A
CD-011	Flare for P130	Group 17
CD-014	Flare (Unit 433)	Group 20
CD-103	Refinery Fuel Gas System – Boilers and Heaters	Group 17
CD-104	LPG Flare	Group 04
CD-105	Carbon Adsorption	Group 25A
CD-106	Carbon Adsorption	Group 25A
CD-107	Carbon Adsorption	Group 25A
CD-108	Amine Tail Gas Scrubber – Reduction Control System	Group 05
CD-109	Tail Gas Incinerator (TGU-1)	Group 05
CD-110	Electrostatic Precipitator	Group 18
CD-111 (P-642)	North Flare South Yard	Group 20
CD-112	South Flare South Yard	Group 20
CD-114	Tail Gas Incinerator (TGU-2)	Group 05
CU-004 (GP)	Unit 1232 B-104 Heater	Group 02
CU-005 (GP)	Unit 1332 H-1 Debutanizer Heater	Group 02
CU-006 (GP)	Unit 1332 H-602 Heater	Group 02
CU-007 (GP)	Unit 1332 H-601 Heater	Group 02
CU-008 (GP)	Unit 1332 H-600 Heater	Group 02
CU-009 (GP)	Unit 1332 H-2 Heater	Group 02
CU-010 (GP)	Unit 1332 H-401 Heater	Group 02
CU-011 (GP)	Unit 1332 H-400 Heater	Group 02
CU-012 (GP)	Unit 1332 H-3 Heater	Group 02
CU-013 (GP)	Unit 137 F-1 Heater	Group 02
CU-014 (GP)	Unit 137 F-2 Heater	Group 02
CU-015 (GP)	Unit 137 F-3 Heater	Group 02
CU-016 (GP)	Unit 231 B-101 Heater	Group 02
CU-017 (GP)	Unit 433 Isostripper H-1 Heater	Group 02
CU-018 (GP)	#37 Boiler	Group 01
CU-020 (GP)	#39 Boiler	Group 01
CU-021 (GP)	#40 Boiler	Group 01
CU-101 (PB)	Unit 210 H-101 Heater	Group 02

CU-102 (PB)	Unit 210 H-201 Heater	Group 02
CU-103 (PB)	Unite 210 13H-1 Heater	Group 02
CU-108 (PB)	2H-1 Heater (IDLED)	Group 02
CU-109 (PB)	Unit 860 2H-2 Heater	Group 02
CU-110 (PB)	Unit 860 2H-3 Heater	Group 02
CU-111 (PB)	Unit 860 2H-4 Heater	Group 02
CU-112 (PB)	Unit 860 2H-5 Heater	Group 02
CU-113 (PB)	Unit 860 2H-6 Heater	Group 02
CU-114 (PB)	Unit 860 2H-7 Heater	Group 02
CU-115 (PB)	Unit 860 2H-8 Heater	Group 02
CU-117 (PB)	Unit 861, Heater 3H-1 (Idle)	Group 02
CU-118 (PB)	Unit 864 PH-1 Heater	Group 02
CU-119 (PB)	PH-2 Heater (Idle)	Group 02
CU-120 (PB)	PH-3 Heater (Idle)	Group 02
CU-121 (PB)	PH-4 Heater (Idle)	Group 02
CU-122 (PB)	PH-5 Heater (Idle)	Group 02
CU-123 (PB)	Unit 864 PH-7 Heater	Group 02
CU-124 (PB)	Unit 864 PH-11 Heater	Group 02
CU-125 (PB)	Unit 864 PH-12 Heater	Group 02
CU-126 (PB)	Unit 865 11H-1 Heater	Group 02
CU-127 (PB)	Unit 865 11H-2 Heater	Group 02
CU-128 (PB)	Unit 866 12H-1 Heater	Group 02
CU-129 (PB)	Unit 868 8H-101 Heater	Group 02
CU-137 (PB)	Unit 870 H1 Heater	Group 02
CU-138 (PB)	Unit 870 H2 Heater	Group 02
CU-139 (PB)	Unit 859 1-H1 Heater	Group 02
P-001 (GP)	T-1116, EFR	Group 14B
P-002 (GP)	T-1216, IFR	Group 15A
P-003 (GP)	T-1217, IFR	Group 15A
P-004 (GP)	T-202, IFR	Group 15A
P-005 (GP)	T-217, IFR	Group 13A
P-006 (GP)	T-228, EFR	Group 14C
P-007 (GP)	T-238, Fixed Roof	Group 15A
P-008 (GP)	T-242, EFR	Group 14B
P-009 (GP)	T-250, IFR	Group 13C
P-010 (GP)	T-251, IFR	Group 13C
P-011 (GP)	T-271, Fixed Roof	Group 15B
P-012 (GP)	T-272, IFR	Group 13B
P-013 (GP)	T-279, Fixed Roof	Group 15A
P-015 (GP)	T-285, IFR	Group 13B
P-016 (GP)	T-286, IFR	Group 13B
P-017 (GP)	T-790, IFR	Group 13A
P-018 (GP)	T-791, IFR	Group 13A

P-019 (GP)	T-792, Fixed Roof	Group 15A
P-020 (GP)	T-793, Fixed Roof	Group 15A
P-021 (GP)	T-795, IFR	Group 13A
P-022 (GP)	T-798, IFR	Group 13A
P-023 (GP)	T-799, IFR	Group 13A
P-024 (GP)	T-1117, EFR	Group 13A
P-025 (GP)	T-1205, IFR	Group 13A
P-026 (GP)	T-1208, IFR	Group 13A
P-027 (GP)	T-1211, Fixed Roof	Group 15A
P-028 (GP)	T-1213, Fixed Roof	Group 15A
P-029 (GP)	T-1214, IFR	Group 13A
P-030 (GP)	T-1215, Fixed Roof	Group 15A
P-031 (GP)	T-1219, Fixed Roof	Group 15A
P-032 (GP)	T-273, Fixed Roof	Group 15A
P-033 (GP)	T-275, Fixed Roof	Group 15A
P-034 (GP)	T-276, IFR	Group 13B
P-035 (GP)	T-280, Fixed Roof	Group 15A
P-036 (GP)	T-282, Fixed Roof	Group 15A
P-037 (GP)	T-284, Fixed Roof	Group 15A
P-039 (GP)	T-494, Fixed Roof	Group 15A
P-040 (GP)	T-495, Fixed Roof	Group 15A
P-045 (GP)	T-229, IFR	Group 13C
P-108 (GP)	Degreasing Vats	Group 22
P-114 (GP)	Wastewater – Subject to or exempt from 40 CFR 61 Subpart FF and 40 CFR 63, Subpart CC	Group 25A
P-115	Refining Wastewater	Group 25B
P-117 (GP) - CD012	1231 Flare – Unit 1232	Group 03
P-118 (GP) – CD013	1232 Flare – Unit 1232	Group 03
P-119 (GP) - CD014	433 Flare	Group 03
P-120 (GP)	FCCU, Unit 1232 Regenerator	Group 18
P-121 (GP)	Butane Isomerization - Unit 331	Group 23
P-123	SOCMI Wastewater	Group 25B
P-125 (GP)	Cooling Tower 1232 - Unit 1232	Group 09
P-126 (GP)	Cooling Tower 433 - Unit 433	Group 09
P-127 (GP)	Cooling Tower 490 – Units 1332, 231, 1732, and 1733	Group 09
P-128 (GP)	Cooling Tower 137 – Unit 137	Group 09
P-129 (GP)	1733 Tank Truck Loading – Cumene	Group 04

P-130 (GP)	Barge Loading – Girard Point Wharf	Group 17
P-131 (GP)	4A API Separator – WWT	Group 25A
P-132 (GP)	2B API Separator – WWT	Group 25A
P-134 (GP)	T-270, IFR	Group 13C
P-135 (GP)	T-767, IFR	Group 13C
P-136 (GP)	T-768, IFR	Group 13C
P-137 (GP)	T-1101, IFR	Group 13C
P-141 (GP)	T-1146, T-1147	Group 25A
P-142 (GP)	T-1142, T-1143	Group 25A
P-144 (GP)	T-219	Group 15A
P-145 (GP)	T-223	Group 15A
P-146 (GP)	T-225	Group 15A
P-147 (GP)	T-227	Group 15A
P-148 (GP)	T-267	Group 15A
P-149 (GP)	T-268	Group 15A
P-150 (GP)	T-281	Group 15A
P-151 (GP)	T-676	Group 15A
P-152 (GP)	T-677	Group 15A
P-153 (GP)	T-794	Group 15A
P-154 (GP)	T-796	Group 15A
P-155 (GP)	T-844	Group 14C
P-156 (GP)	T-1108	Group 15A
P-157 (GP)	T-1038	Group 15A
P-158 (GP)	T-1039	Group 15B
P-159 (GP)	T-1086	Group 13C
P-160 (GP)	T-1087	Group 13C
P-161 (GP)	T-1128	Group 15A
P-162 (GP)	T-1136	Group 14C
P-163 (GP)	T-1209	Group 13A
P-164 (GP)	T-1210	Group 15A
P-165 (GP)	T-1212	Group 15A
P-166 (GP)	T-1218	Group 15A
P-167 (GP)	T-1220	Group 15A
P-168 (GP)	T-271	Group 15A
P-170 (GP)	T-277	Group 15A
P-171 (GP)	T-1004	Group 15B
P-172 (GP)	T-1005	Group 15B
P-173 (GP)	T-1006	Group 15B
P-174 (GP)	T-1007	Group 13C
P-175 (GP)	T-3000	Group 15A
P-176 (GP)	T-3001	Group 15A
P-177 (GP)	T-3002	Group 15A
P-178 (GP)	T-3004	Group 15A
P-179 (GP)	T-3005	Group 15A

P-180 (GP)	Cumene Production Unit 1733	Groups 25B, 26
P-181 (GP)	Benzene Production Unit 1732	Groups 25B, 26
P-181	Six vents (go to CD-012 or CD-013)	Group 10
P-182 (GP)	Alkylation Unit 433 (Refinery Process Unit)	Group 20
P-183 (GP)	Unit 1732 benzene railcar unloading station	Group 04
P-184 (GP)	Four vents (one goes to CD-006, and three go to a process heater or to CD-012 or CD-013	Group 10
P-501 (PB)	Tank # 26, IFR	Group 13C
P-502 (PB)	Tank # 27, EFR	Group 14B
P-503 (PB)	Tank # 28, EFR	Group 14B
P-504 (PB)	Tank # 29, EFR	Group 14B
P-505 (PB)	Tank # 30, EFR	Group 14B
P-506 (PB)	Tank # 32, IFR	Group 13B
P-507 (PB)	Tank # 33, EFR	Group 14B
P-508 (PB)	Tank # 34, EFR	Group 14B
P-509 (PB)	Tank # 35, EFR	Group 14B
P-510 (PB)	Tank # 36, EFR	Group 14B
P-511 (PB)	Tank # 37, IFR	Group 13C
P-512 (PB)	Tank # 38, EFR	Group 14B
P-513 (PB)	Tank # 39, EFR	Group 14B
P-514 (PB)	Tank # 40, EFR	Group 14B
P-515 (PB)	Tank # 42, EFR	Group 15A
P-516 (PB)	Tank # 43, Cone Roof	Group 15A
P-517 (PB)	Tank # 44, Cone Roof	Group 15A
P-518 (PB)	Tank # 83, Cone Roof	Group 15A
P-519 (PB)	Tank # 84, Cone Roof	Group 15A
P-520 (PB)	Tank # 85, Cone Roof	Group 15A
P-521 (PB)	Tank #117, EFR (also subject to NSPS Subpart Ka – less stringent)	Group 14B
P-522 (PB)	Tank # 119, IFR	Group 13B
P-523 (PB)	Tank # 121, IFR	Group 13A
P-524 (PB)	Tank # 125, EFR	Group 14B
P-525 (PB)	Tank # 126, EFR	Group 14B
P-526 (PB)	Tank # 128, EFR	Group 14B
P-527 (PB)	Tank # 129, EFR	Group 14B
P-528A (PB)	Tank # 140, Cone Roof	Group 15A
P-529 (PB)	Tank # 144, Cone Roof	Group 15A
P-530 (PB)	Tank # 145, Cone Roof	Group 15A
P-531 (PB)	Tank # 146, EFR	Group 14B
P-532 (PB)	Tank # 149, Cone Roof	Group 15A

P-533 (PB)	Tank # 150, EFR	Group 15A
P-534 (PB)	Tank # 151, EFR	Group 15A
P-535 (PB)	Tank # 152, Cone Roof	Group 15A
P-536 (PB)	Tank # 161, Cone Roof	Group 15A
P-537 (PB)	Tank # 162, EFR	Group 14B
P-538 (PB)	Tank # 172, IFR	Group 13B
P-540 (PB)	Tank # 176, EFR	Group 14B
P-541 (PB)	Tank # 178, EFR	Group 14B
P-542 (PB)	Tank #179, EFR	Group 14B
P-543 (PB)	Tank #181, EFR	Group 14B
P-544 (PB)	Tank #182, IFR	Group 13B
P-545 (PB)	Tank #190, IFR	Group 13B
P-546 (PB)	Tank #191, EFR	Group 14B
P-547 (PB)	Tank #204, IFR	Group 13B
P-550 (PB)	Tank #252, Cone Roof	Group 15A
P-551 (PB)	Tank #253, Cone Roof	Group 15A
P-555 (PB)	Tank #298, Cone Roof	Group 15A
P-563 (PB)	Tank #663, Cone Roof	Group 15A
P-564 (PB)	Tank #665, Cone Roof	Group 15A
P-564A (PB)	Tank #664, Cone Roof	Group 15A
P-565 (PB)	Tank #666, Cone Roof	Group 15A
P-566 (PB)	Tank #667, Cone Roof	Group 15A
P-567 (PB)	Tank #668, Cone Roof	Group 15A
P-568 (PB)	Tank #669, Cone Roof	Group 15A
P-569 (PB)	Tank #670, Cone Roof	Group 15A
P-571 (PB)	Tank #672, Cone Roof	Group 15A
P-574 (PB)	Tank #821, Cone Roof	Group 15A
P-575 (PB)	Tank #822, IFR	Group 15A
P-576 (PB)	Tank #823, IFR	Group 15A
P-577 (PB)	Tank #824, Cone Roof	Group 15A
P-578 (PB)	Tank #825, Cone Roof	Group 15A
P-579 (PB)	Tank #826, EFR	Group 14B
P-580 (PB)	Tank #831, EFR	Group 15A
P-581 (PB)	Tank #832, Cone Roof	Group 15A
P-582 (PB)	Tank #833, IFR	Group 15A
P-583 (PB)	Tank #834, Cone Roof	Group 15A
P-584 (PB)	Tank #835, IFR	Group 15A
P-585 (PB)	Tank #836, IFR	Group 15A
P-587 (PB)	Tank #840, EFR	Group 14B
P-588 (PB)	Tank #841, EFR	Group 14B
P-590 (PB)	Tank #843, EFR	Group 14B
P-591 (PB)	Tank #844, EFR	Group 14C
P-593 (PB)	Tank #846, EFR	Group 14B
P-594 (PB)	Tank #847, EFR	Group 14B

P-595 (PB)	Tank #848, EFR	Group 14A
P-596 (PB)	Tank #849, EFR	Group 14B
P-598 (PB)	Tank #880, EFR	Group 14A
P-600 (PB)	Tank #882, EFR	Group 14B
P-601 (PB)	Tank #883, EFR	Group 14B
P-602 (PB)	Tank #884, EFR	Group 14B
P-603 (PB)	Tank #885, EFR	Group 14B
P-604 (PB)	Tank #886, EFR	Group 14B
P-623 (PB)	Tank #7275, Cone Roof	Group 15A
P-624 (PB)	Tank # 7300, EFR	Group 14C
P-627 (PB)	Tank #7308, EFR	Group 14C
P-632 (PB)	Cooling Tower, Unit 868	Group 09
P-633 (PB)	Cooling Tower, Unit 210	Group 09
P-634 (PB)	Cooling Tower, Unit 864	Group 09
P-635 (PB)	Cooling Tower, Complex	Group 09
P-636 (PB)	Marine Barge Loading	Group 17
P-638 (PB)	Propane Loading Station	Group 04
P-639 (PB)	API Separators A&B – Bio Plant	Group 25A
P-640 (PB)	Dissolved Nitrogen Floatation Unit A&B – Bio Plant	Group 25A
P-641 (PB)	Bio Plant Sewer System – Refinery	Group 25A
P-642 (PB) CD111	Flare, North Flare in South Yard	Group 03
P-643 (PB) CD112	Flare, South Flare in South Yard (IDLED)	Group 03
P-646 (PB)	Flares, Emergency Sulfur Plant	Group 03
P-659 (PB)	North Claus Sulfur Recovery Plant – Unit 867	Group 05
P-660 (PB)	South Claus Sulfur Recovery Plant – Unit 867	Group 05
P-661 (PB)	Fluid Catalytic Cracking Regenerator – Unit 868	Group 18
P-662 (PB)	Alkylation Unit 869	Group 20
P-664 (PB)	Inter-Refinery Pipeline	Group 19
P-667 (PB)	Benzene Wastewater Sources 40 CFR 61, Subpart FF & 40 CFR 63, Subpart CC	Group 25A
P-674 (PB)	H2 Purification	Group 21
P-1002 (PB)	Group 1 Vents 40 CFR 63, Subpart CC	Group 10

SECTION B. GENERAL REQUIREMENTS

1. Definitions

[25 Pa Code §121.1]

Words and terms that are not otherwise defined in this permit shall have the meanings set forth in Section 3 of the Pennsylvania Air Pollution Control Act (35 P.S. §4003) and 25 Pa Code §121.1.

2. Property Rights

[25 Pa Code §127.512(c)(4)]

This permit does not convey property rights of any sort, or any exclusive privileges.

3. Permit Expiration

[25 Pa Code §127.446(a) and (c)]

This operating permit is issued for a fixed term of 5 years and shall expire on the date specified on the front page of this permit. The terms and conditions of the expired permit shall automatically continue pending issuance of a new Title V permit, provided the Permittee has submitted a timely and complete application and paid applicable fees required under 25 Pa Code §127, Subchapter I and AMS is unable, through no fault of the Permittee, to issue or deny a new permit before the expiration of the previous permit. An application is complete if it contains sufficient information to begin processing the application, has the applicable sections completed and has been signed by a responsible official.

4. Permit Renewal

[25 Pa Code §§127.412, 127.413, 127.414, 127.446(e) & 127.503]

(a) The Permittee shall submit a complete application for renewal of the Title V permit at least 6 months and not more than 18 months before the expiration date of this permit. The Permittee shall submit to AMS a timely and complete application.

(b) The application for permit renewal shall include the current permit number, the appropriate renewal fee, a description of any permit revisions and off-permit changes that occurred during the permit term, and any applicable requirements that were promulgated and not incorporated into the permit during the permit term. The application for renewal of the Title V permit shall include submission of supplemental compliance review forms in accordance with 25 Pa Code §127.412(b) or (j).

(c) The Permittee, upon becoming aware that any relevant facts were omitted or incorrect information was submitted in the permit application shall promptly submit such supplementary facts or corrected information during the permit renewal process. The Permittee shall also provide additional information as necessary to address any requirements that become applicable to the source

after the date a complete renewal application was submitted but prior to release of a draft permit.

5. Transfer of Ownership or Operation

[25 Pa Code §§127.450(a)(4), 127.464(a) & AMR I Sec. II.A.5.c.]

(a) In accordance with 25 Pa Code §127.464(a) this permit may not be transferred to another person, except in cases of transfer-of-ownership which are documented and approved to the satisfaction of AMS.

(b) In accordance with 25 Pa Code §127.450(a)(4), a change in ownership or operational control of the source shall be treated as an administrative amendment if:

(1) AMS determines that no other change in the permit is necessary;

(2) A written agreement has been submitted to AMS identifying the specific date of the transfer of permit responsibility, coverage and liability between the current and the new Permittee; and

(3) A compliance review form has been submitted to AMS and the permit transfer has been approved by AMS.

6. Inspection and Entry

[25 Pa Code §127.513, 35 P.S. §4008, §114 of the Clean Air Act & Phila. Code §3-304]

(a) Upon presentation of credentials and other documents as may be required by law for inspection and entry purposes, the Permittee shall allow AMS or authorized representatives of AMS to perform the following:

(1) Enter at reasonable times upon the Permittee's premises where a Title V source is located or emissions related activity is conducted, or where records are kept under the conditions of this permit;

(2) Have access to and copy or remove, at reasonable times, any records that are kept under the conditions of this permit;

(3) Inspect at reasonable times, facilities, equipment including monitoring and air pollution control equipment, practices, or operations regulated or required under this permit;

(4) Sample or monitor, at reasonable times, any substances or parameters for the purpose of assuring compliance with the permit or applicable requirements as authorized by the Clean Air Act, the Pennsylvania Air Pollution Control Act, the Philadelphia Air Management Code, or the regulations promulgated thereunder.

(b) Pursuant to 35 P.S. §4008, no person shall hinder, obstruct, prevent, or interfere with AMS or its personnel in the performance of any duty authorized under the Pennsylvania Air Pollution Control Act, Philadelphia Air Management Code, or regulations adopted thereunder.

(c) Nothing in this permit condition shall limit the ability of the EPA to inspect or enter the premises of the Permittee in accordance with Section 114 or other applicable provisions of the Clean Air Act.

7. Compliance Requirements

[25 Pa Code §§127.25, 127.444, 127.512(c)(1) & AMR I Sec. II.A.5.b.]

(a) The Permittee shall comply with the conditions of this permit. Noncompliance with this permit constitutes a violation of the Clean Air Act, the Pennsylvania Air Pollution Control Act, and/or the Philadelphia Air Management Code and is grounds for one or more of the following:

(1) Enforcement action

(2) Permit termination, revocation and reissuance or modification

(3) Denial of permit renewal application.

(b) A person may not cause or permit the operation of a source subject to 25 Pa Code Article III or the Philadelphia Air Management Code, unless the source(s) and air cleaning devices identified in the application for the plan approval/ installation permit and operating permit and the plan approval/ installation permit issued to the source are operated and maintained in accordance with specifications in the application and conditions in the plan approval/ installation permit and operating permit issued by AMS. A person may not cause or permit the operation of an air contamination source subject to 25 Pa Code Chapter 127 or the Philadelphia Air Management Code in a manner inconsistent with good operating practices.

(c) For purposes of sub-condition (b) of this permit condition, the specifications in applications for plan approvals/ installation permits and operating permits are the physical configurations and engineering design details which AMS determines are essential for the Permittee's compliance with the applicable requirements in this Title V permit.

(d) The Permittee shall not change any installation such that the registered information concerning it is no longer accurate without first notifying AMS.

8. Need to Halt or Reduce Activity Not A Defense

[25 Pa Code §127.512(c)(2)]

It shall not be a defense for a Permittee in an enforcement action that it would have been necessary to halt or reduce the permitted activity in order to maintain compliance with the conditions of this permit.

9. Duty to Provide Information

[25 Pa Code §127.411(d), §127.512(c)(5) & AMR I Sec. II.B. and C.]

(a) The Permittee shall furnish to AMS, within a reasonable time, information that AMS may request in writing to determine whether cause exists for modifying,

revoking and reissuing, or terminating the permit, or to determine compliance with the permit.

(b) Upon request, the Permittee shall also furnish AMS copies of records that the Permittee is required to keep by this permit, or for information claimed to be confidential, the Permittee may furnish such records along with any claim of confidentiality.

10. Reopening and Revising The Title V Permit for Cause

[25 Pa Code §§127.463, 127.512(c)(3), & 127.542]

(a) This Title V permit may be modified, revoked, reopened and reissued or terminated for cause. The filing of a request by the Permittee for a permit modification, revocation, reissuance, or termination, or of a notification of planned changes or anticipated noncompliance does not stay a permit condition.

(b) This permit may be reopened and reissued prior to expiration of the permit under one or more of the following circumstances:

(1) Additional applicable requirements under the Clean Air Act, Pennsylvania Air Pollution Control Act, or Philadelphia Air Management Code become applicable to a Title V facility with a remaining permit term of 3 or more years prior to the expiration date of this permit. AMS will revise the permit as expeditiously as practicable but not later than 18 months after promulgation of the applicable standards or regulations. No such revision is required if the effective date of the requirement is later than the expiration date of this permit, unless the original permit or its terms and conditions has been extended.

(2) Additional requirements, including excess emissions requirements, become applicable to an affected source under the acid rain program. Excess emissions offset plans for an affected source shall be incorporated into the permit upon approval by the Administrator of EPA.

(3) AMS or the EPA determines that this permit contains a material mistake or inaccurate statements were made in establishing the emissions standards or other terms or conditions of this permit.

(4) AMS or the Administrator of EPA determines that the permit must be revised or revoked to assure compliance with the applicable requirements.

(c) Proceedings to revise this permit shall follow the same procedures which apply to initial permit issuance and shall affect only those parts of this permit for which cause to revise exists. The revision shall be made as expeditiously as practicable.

(d) Regardless of whether a revision is made in accordance with (b)(1) above, the Permittee shall meet the applicable standards or regulations promulgated under the Clean Air Act within the time frame required by standards or regulations.

11. Reopening a Title V Permit for Cause by EPA

[25 Pa Code §127.543]

As required by the Clean Air Act and regulations adopted thereunder, this permit may be modified, reopened and reissued, revoked or terminated for cause by EPA in accordance with procedures specified in 25 Pa Code §127.543.

12. Significant Operating Permit Modifications

[25 Pa Code §127.541]

When permit modifications during the term of this permit do not qualify as minor permit modifications or administrative amendments, the Permittee shall submit an application for significant Title V permit modifications in accordance with 25 Pa Code §127.541.

13. Minor Operating Permit Modifications

[25 Pa Code §§121.1, 127.462 & AMR I Sec. II.A.]

(a) The Permittee may make minor permit modifications (as defined in 25 Pa Code §121.1) in accordance with 25 Pa Code §127.462.

(b) Unless precluded by the Clean Air Act or the regulations thereunder, the permit shield described in 25 Pa Code §127.516 (relating to permit shield) shall extend to an operational flexibility change authorized by 25 Pa Code §127.462.

14. Administrative Operating Permit Modifications

[25 Pa Code §127.450]

(a) The Permittee may request administrative operating permit amendments, as defined in §127.450(a), according to the procedures specified in §127.450. Administrative amendments are not authorized for any amendment precluded by the Clean Air Act or the regulations thereunder from being processed as an administrative amendment.

(b) Unless precluded by the Clean Air Act or the regulations thereunder, AMS will, upon taking final action granting a request for an administrative permit amendment in accordance with §127.450(c), allow coverage by the permit shield in 25 Pa Code §127.516 (relating to permit shield) for administrative permit amendments which meet the relevant requirements of 25 Pa Code Article III.

15. Severability Clause

[25 Pa Code §127.512(b) & AMR I Sec. VIII]

The provisions of this permit are severable, and if any provision of this permit is determined by the Environmental Hearing Board (Department of Licenses and Inspections Review Board until the Environmental Hearing Board is approved) or a court of competent jurisdiction to be invalid or unenforceable, such a determination will not affect the remaining provisions of this permit.

16. Fee Payment

[25 Pa Code §§127.704, 127.705 & 127.707]

(a) The Permittee shall pay fees to AMS in accordance with the applicable fee schedules in 25 Pa Code Chapter 127 Subchapter I (relating to plan approval and operating permit fees).

(b) Emission fees. The Permittee shall, on or before September 1 of each year, pay applicable annual Title V emission fees for emissions occurring in the previous calendar year as specified in 25 Pa Code §127.705. The Permittee is not required to pay an ernission fee for emissions of more than 4,000 tons of each regulated pollutant emitted from the facility.

(c) As used in this permit condition, the term "regulated pollutant" is defined as a Volatile Organic Compound, each pollutant regulated under Sections 111 and 112 of the Clean Air Act and each pollutant for which a National Ambient Air Quality Standard has been promulgated, except that carbon monoxide is excluded. Payment shall be made to AMS.

(d) Late Payment. Late payment of emission fees will subject the Permittee to the penalties prescribed in 25 Pa Code §127.707 and may result in the suspension or termination of the Title V permit. The Permittee shall pay a penalty of fifty per centum (50%) of the fee amount, plus interest on the fee amount computed in accordance with 26 U.S.C.A. §6621(a)(2) from the date the emission fee should have been paid in accordance with the time frame specified in 25 Pa Code §127.705(c).

(e) The Permittee shall pay an annual operating permit administration fee according to the fee schedule established in 25 Pa Code §127.704(c) if the facility, identified in subparagraph (iv) of the definition of the term "Title V facility" in 25 Pa Code §121.1, is subject to Title V after the EPA Administrator completes rulemaking requiring regulation of those sources under Title V of the Clean Air Act.

(f) This permit condition does not apply to a Title V facility which qualifies for exemption from emission fees under 35 P.S. §4006.3(f).

17. Authorization for De Minimis Emissions Increases

[25 Pa Code §§127.14(b), 127.449 & Phila. Code §3-306]

(a) This permit authorizes de minimis emission increases from a new or existing source in accordance with 25 Pa Code §§127.14 and 127.449 without the need for a plan approval, Phila. Code §3-306 without the need for an installation permit, or prior issuance of a permit modification. The Permittee shall provide AMS with 7 days prior written notice before commencing any de minimis emission increase that would result from either: (1) a physical change of minor significance under 127.14.(c)(1) and Phila. Code §3-306; or (2) the construction, installation, modification or reactivation of an air contamination source. The written notice shall:

(1) Identify and describe the pollutants that will be emitted as a result of the de minimis increase.

(2) Provide emission rates in tons/year and in terms necessary to establish compliance consistent with any applicable requirement.

AMS may disapprove or condition the de minimis emission increase at any time.

(b) Except as provided below in (c) and (d) of this permit condition, the Permittee is authorized during the term of this permit to make the following de minimis emission increases (expressed in tons per year), up to the following amounts without the need for a plan approval or installation permit or prior issuance of a permit modification:

(1) Four tons of carbon monoxide from a single source during the term of the permit and 20 tons of carbon monoxide at the facility during the term of the permit.

(2) One ton of NO_x from a single source during the term of the permit and five tons of NO_x at the facility during the term of the permit.

(3) One and six-tenths tons of oxides of sulfur from a single source during the term of the permit and eight tons of oxides of sulfur at the facility during the term of the permit.

(4) Six-tenths of a ton of PM-10 from a single source during the term of the permit and three tons of PM-10 at the facility during the term of the permit. This shall include emissions of a pollutant regulated under Section 112 of the Clean Air Act unless precluded by the Clean Air Act, or 25 Pa Code Article III.

(5) One ton of VOCs from a single source during the term of the permit and five tons of VOCs at the facility during the term of the permit. This shall include emissions of a pollutant regulated under Section 112 of the Clean Air Act unless precluded by the Clean Air Act, or 25 Pa Code Article III.

(c) The Permittee is authorized to install the following minor sources without the need for a plan approval or installation permit:

(1) Air conditioning or ventilation systems not designed to remove pollutants generated or released from other sources.

(2) Combustion units rated at 250,000 or less Btu per hour of net load rating.

(3) Laboratory equipment used exclusively for chemical or physical analysis.

(d) This permit does not authorize de minimis emission increases if the emissions increase would cause one or more of the following:

(1) Increase the emissions of the pollutant regulated under Section 112 of the Clean Air Act except as authorized in subparagraph (b)(4) & (5) of this permit condition.

(2) Subject the facility to the prevention of significant deterioration requirements in 25 Pa Code Chapter 127, Subchapter D and/or the new source review requirements in subchapter E.

(3) Violate any applicable requirement of the Air Management Code, the Air Pollution Control Act, the Clean Air Act, or the regulations thereunder.

(4) Changes which are modifications under the provision of Title 1 of the Clean Air Act and emission increases which would exceed the allowable emissions level (expressed as a rate of emissions or in terms of total emissions) under the Title V permit.

(e) Unless precluded by the Clean Air Act or the regulations thereunder, the permit shield described in 25 Pa Code §127.516 (relating to permit shield) applies to de minimis emission increases and the installation of minor sources made pursuant to this permit condition.

(f) Emissions authorized under this permit condition shall be included in the monitoring, recordkeeping and reporting requirements of this permit.

(g) Except for de minimis emission increases allowed under this permit, or sources and physical changes meeting the requirements of 25 Pa Code §127.14, the Permittee is prohibited from making physical changes or engaging in activities that are not specifically authorized under this permit without first applying for a plan approval. A City of Philadelphia Installation Permit is required if the activities are subject to the Philadelphia Air Management Code. In accordance with 25 Pa Code §127.14(b), a plan approval is not required for the construction, modification, reactivation, or installation of the sources creating the de minimis emissions increase.

(h) The Permittee may not meet de minimis emission threshold levels by offsetting emission increases or decreases at the same source.

18. Reactivation of Sources

[25 Pa Code §§127.11, 127.11a, 127.215 & AMR I Sec. II.A.5.]

(a) The Permittee shall notify AMS of any source that is out of operation for more than a year in its semiannual monitoring report.

(b) The Permittee may reactivate a source at the facility that has been out of operation or production for at least one year, but less than or equal to 5 years, if the source is reactivated in accordance with the requirements of 25 Pa Code §§127.11a and 127.215. The reactivated source will not be considered a new source.

(c) A source which has been out of operation or production for more than five years but less than 10 years may be reactivated and will not be considered a new source if the Permittee satisfies the conditions specified in 25 Pa Code §127.11a(b).

19. Circumvention

[25 Pa Code §§121.9, 127.216 & AMR I Sec. VII]

(a) The Permittee may not circumvent the requirements of 25 Pa Code Chapter 127, by causing or allowing a pattern of ownership or development, including the phasing, staging, delaying or engaging in incremental construction, over a geographic area of a facility which, except for the pattern of ownership or

development, would otherwise require a permit or submission of a plan approval application.

(b) No person may permit the use of a device, stack height which exceeds good engineering practice stack height, dispersion technique or other technique which, without resulting in reduction of the total amount of air contaminants emitted, conceals or dilutes an emission of air contaminants which would otherwise be in violation of this permit, the Pennsylvania Air Pollution Control Act, the Philadelphia Air Management Code or the regulations promulgated thereunder, except that with prior approval of AMS, the device or technique may be used for control of malodors.

20. Operational Flexibility

[25 Pa Code §127.3 & AMR I Sec. XII]

(a) The Permittee is authorized to make changes within the Title V facility in accordance with the following provisions in 25 Pa Code Chapter 127 and in Phila. Code §3-306 which implement the operational flexibility requirements of Section 502(b)(10) of the Clean Air Act and Section 6.1(i) of the Pennsylvania Air Pollution Control Act:

(1) Section 127.14 and Phila. Code §3-306, whichever is more stringent (relating to exemptions)

(2) Section 127.447 (relating to alternative operating scenarios)

(3) Section 127.448 (relating to emissions trading at facilities with Federally enforceable emissions caps)

(4) Section 127.449 (relating to de minimis emission increases)

(5) Section 127.450 (relating to administrative operating permit amendments)

(6) Section 127.462 (relating to minor operating permit amendments)

(7) Subchapter H (relating to general plan approvals and operating permits)

(b) Unless precluded by the Clean Air Act or the regulations adopted thereunder, the permit shield authorized under 25 Pa Code §127.516 shall extend to operational flexibility changes made at this Title V facility pursuant to this permit condition and other applicable operational flexibility terms and conditions of this permit.

21. Approved Economic Incentives and Emission Trading Programs

[25 Pa Code §127.512(e)]

No permit revision shall be required under approved economic incentives, marketable permits, emissions trading and other similar programs or processes for changes that are provided for in this Title V permit.

22. Permit Shield

[25 Pa Code §§127.516, 127.450(d), 127.449(f) & 127.462(g)]

(a) The Permittee's compliance with the conditions of this permit shall be deemed in compliance with applicable requirements as of the date of permit issuance if either of the following applies:

(1) The applicable requirements are included and are specifically identified in this permit.

(2) AMS specifically identifies in the permit other requirements that are not applicable to the permitted facility.

(b) Nothing in 25 Pa Code §127.516 or the Title V permit shall alter or affect the following:

(1) The provision of Section 303 of the Clean Air Act, including the authority of the Administrator of the EPA provided thereunder.

(2) The liability of the Permittee for a violation of an applicable requirement prior to the time of permit issuance.

(3) The applicable requirements of the acid rain program, consistent with Section 408(a) of the Clean Air Act.

(4) The ability of the EPA to obtain information from the Permittee under Section 114 of the Clean Air Act.

(c) Unless precluded by the Clean Air Act or regulations thereunder, final action by AMS on administrative amendments, minor and significant permit modifications, and operational flexibility changes shall be covered by the permit shield provided such amendments, modifications and changes meet the relevant requirements of 25 Pa Code Article III.

(d) The permit shield authorized under §127.516 is in effect for the permit terms and conditions in this Title V permit, including administrative operating permit amendments and minor operating permit modifications.

SECTION C. FACILITY WIDE REQUIREMENTS

1. Fugitive Emissions

[25 Pa Code §§123.1, 123.2, & AMR II Sec. VIII]

(a) No person may permit the emission into the outdoor atmosphere of a fugitive air contaminant from a source other than the following:

(1) Construction, or demolition of buildings or structures.

(2) Grading, paving and maintenance of roads and streets.

(3) Use of roads and streets. Emissions from material in or on trucks, railroad cars, and other vehicular equipment are not considered as emissions from use of roads and streets.

(4) Clearing of land.

(5) Stockpiling of materials.

(6) Sources and classes of sources other than those identified in paragraphs 1(a)(1)-1(a)(5) for which the Permittee has obtained a determination from AMS that fugitive emissions from the source, after appropriate control, meet the following requirements:

(i) The emissions are of minor significance with respect to causing air pollution.

(ii) The emissions are not preventing or interfering with the attainment or maintenance of an ambient air quality standard.

(b) The Permittee may not permit fugitive particulate matter from a source specified in paragraphs 1(a)(1)-1(a)(6) if the emissions are visible at the point the emissions pass outside the facility's property.

(c) The Permittee shall take all reasonable actions to prevent particulate matter emitted from a source identified in paragraphs 1(a)(1)-1(a)(6) from becoming airborne. These actions include, but are not limited to, the following:

(1) Use, where possible, of water or chemicals for control of dust in the demolition of buildings or structures, construction operations, the grading of roads, or the clearing of land.

(2) Application of asphalt, oil, water or suitable chemicals on dirt roads, material stockpiles and other surfaces which may give rise to airborne dusts.

(3) Paving and maintenance of roadways.

(4) Prompt removal of earth or other material from paved streets onto which earth or other material has been transported by trucking or earth moving equipment, erosion by water, or other means.

2. Odor Emissions Limitations

[25 Pa Code §123.31(b) & AMR V Sec. XX]

A person may not permit the emission into the outdoor atmosphere of any malodorous air contaminants from any source, in such a manner that the malodors are detectable outside the property of the person on whose land the source is being operated.

3. Visible Emissions Limitations

[25 Pa Code §§123.41, 123.42, 123.43, and AMR II Sec. IV]

(a) A person at the Title V facility may not permit the emission into the outdoor atmosphere of visible air contaminants in such a manner that the opacity of the emission is either of the following:

(1) Equal to or greater than 20% for a period or periods aggregating more than 3 minutes in any one hour.

(2) Equal to or greater than 60% at any time.

(b) These emission limitations do not apply when: [25 Pa Code §123.42]

(1) The presence of uncombined water is the only reason for failure of the emission to meet the limitations.

(2) When the emission results from sources specified in 25 Pa Code §123.1(a)(1)-(9).

(3) When the emission results from the operation of equipment used solely to train and test persons in observing the opacity of visible emissions.

(c) The visible emissions may be measured using either of the following: [25 Pa Code §123.43]

(1) A device approved by AMS and maintained to provide accurate opacity measurements.

(2) Observers, trained and qualified to measure plume opacity with the naked eye or with the aid of devices approved by AMS.

(d) The emission limitations of 20% and 60% as stated above do not apply to facilities which have received a stricter emission limitation in a plan approval or operating permit as part of AMS's Best Available Technology determination, if that limitation is stated elsewhere in this permit.

4. Noise and Vibrations

[Philadelphia Code Chapter 10-400 (Noise and Excessive Vibration)]**

(a) The Permittee shall not create or cause, or permit the creation of sound, sound originating from a property used for a non-residential purpose shall not exceed the following:

(1) 5 decibels above background level measured at the property boundary of the nearest occupied residential property; or

(2) 10 decibels above background level measured at the property boundary of the nearest occupied non-residential property.

(b) Vibration levels shall not exceed 0.15 inches per second beyond any source property boundary.

5. Fuel Usage

[AMR III Sec. I & III. Compliance with the requirement specified in this streamlined permit condition assures compliance with the provisions specified in 25 Pa Code §123.22(e)]

(a) Unless specified in Section D, the Permittee shall use only natural gas, propane, or commercial fuel oil. The maximum sulfur content would be 0.2%, 0.3% and 0.5 % for number 2, 4, and 5 or 6 fuel oil, respectively.

(1) Beginning July 1, 2016, the maximum sulfur content of fuel oil, expressed as parts per million (ppm) by weight or percentage by weight, shall be: [25 Pa Code §123.22(e)(2)(i)]

Grades Commercial Fuel Oil (Consistent with ASTM 396)

No. 2 and lighter oil	500 ppm	(0.05%)
No. 4 oil	2,500 ppm	(0.25%)
No. 5, No. 6 and heavier oil	5,000 ppm	(0.5%)

(2) Commercial fuel oil that was stored in this Commonwealth by the ultimate consumer prior to July 1, 2016, which met the applicable maximum allowable sulfur content for commercial fuel oil through June 30, 2016, in subparagraph (i) at the time it was stored, may be used by the ultimate consumer in this Commonwealth on and after July 1, 2016. [25 Pa Code §123.22(e)(2)(ii)]

(b) When it appears that the delivery of low sulfur fuel is, or is about to be, interrupted because of unavailability, accident, or other emergency conditions, AMS may authorize the use of an alternative fuel supply, involving the least adverse impact on air quality, for a period not to exceed 30 days. Longer periods of time of 120 days each may be authorized by AMS only after review and recommendation made by the Air Pollution Control Board for each extended period of time. Factors to be considered shall include the availability of alternate complying fuels, the availability of sulfur dioxide stack gas removal equipment, and the anticipated effect on air quality in the neighborhood, area and region. The Air Pollution Control Board, after a hearing, shall have the right to adjust, revoke, rescind, and make changes or modifications of any authorizations if there shall occur such change in the condition of availability of low sulfur fuel or the factors set forth in this subsection. [AMR III, Sec. III.C.]

6. Open Burning

[AMR II Sec. II]

The Permittee shall not permit the ignition or continuation of open burning of any materials.

7. Air Pollution Episode

[25 Pa Code Chapter 137 & AMR IV Sec. V, VI & VII]

The Permittee shall reduce its emission according to the approved curtailment plan, when the Philadelphia Health Commissioner or his designee declares an air pollution episode.

8. Modification of 112 Pollutants Which Are VOCs and PM-10

[25 Pa Code §127.512(j)]

Except when precluded by the Clean Air Act, the Permittee may modify the mixture of pollutants regulated under Section 112 of the Clean Air Act (42 U.S.C.A. §7412) which are VOCs or PM-10 if:

(a) The emission limitations of the permit are not violated, and

(b) The Permittee keeps a log which identifies the mixture of pollutants regulated under Section 112 and reports such changes to AMS in the next semiannual report.

9. Risk Management

[25 Pa Code §§127.441(d), 127.512(i) and 40 CFR Part 68]

(a) If required by Section 112(r) of the Clean Air Act, the Permittee shall develop and implement an accidental release program consistent with requirements of the Clean Air Act and 40 CFR Part 68 (relating to chemical accident prevention provisions) and the Federal Chemical Safety Information, Site Security and Fuels Regulatory Relief Act (P.L. 106-40).

(b) When a regulated substance listed in 40 CFR §68.130 is present in a process at the Title V facility in more than the listed threshold quantity, the Permittee shall prepare and implement a risk management plan (RMP) which meets the requirements of Section 112(r) of the Clean Air Act and 40 CFR Part 68 and the Federal Chemical Safety Information, Site Security and Fuels Regulatory Relief Act.

(1) The Permittee shall submit the first RMP to AMS and EPA no later than the latest of the following:

(i) June 21, 1999;

(ii) Three years after the date on which a regulated toxic substance is first listed under §68.130; or

(iii) The date on which a regulated substance is first present above a threshold quantity in a process.

(2) The Permittee shall submit any additional relevant information requested by AMS or EPA concerning the RMP and shall make subsequent submissions of RMPs in accordance with 40 CFR §68.190.

(3) The Permittee shall certify that the RMP is accurate and complete in accordance with the requirements of 40 CFR Part 68 and guidance developed by EPA, including a checklist addressing the required elements of a complete RMP.

(c) As used in this permit condition, and defined in 40 CFR §68.3, the term "process" means any activity involving a regulated substance including any use, storage, manufacturing, handling, or on-site movement of such substances or any combination of these activities. For purposes of this definition, any group of vessels that are interconnected, or separate vessels that are located such that a regulated substance could be involved in a potential release, shall be considered a single process.

(d) If the Title V facility is subject to 40 CFR Part 68, as part of the certification required under this permit, the Permittee shall:

(1) Submit a compliance schedule for satisfying the requirements of 40 CFR Part 68 by the date specified in 40 CFR §68.10(a); or

(2) Certify that the Title V facility is in compliance with all requirements of 40 CFR Part 68 including the registration and submission of the RMP.

(e) If the Title V facility is subject to 40 CFR Part 68, the Permittee shall maintain records supporting the implementation of an accidental release program for five years in accordance with 40 CFR §68.200.

(f) When the Title V facility is subject to the accidental release program requirements of Section 112(r) of the Clean Air Act and 40 CFR Part 68, appropriate enforcement action will be taken by AMS if:

(1) the Permittee fails to register and submit the RMP or a revised plan pursuant to 40 CFR Part 68.

(2) the Permittee fails to certify that the Title V facility is in compliance with the requirements of Section 112(r) of the Clean Air Act, 40 CFR Part 68, and 25 Pa Code §127.512(i).

10. Stratospheric Ozone Protection

[25 Pa Code §127.441(b) and 40 CFR Part 82]

The Permittee shall satisfy applicable requirements of 40 CFR Part 82, Subpart F, Recycling and Emissions Reduction, during the service, maintenance, repair and disposal of equipment containing Class I and Class II refrigerants regulated under such regulations.

11. Sampling, Testing and Monitoring Procedures

[25 Pa Code §§127.441(c) & 127.463(e); Chapter 139; & 114(a)(3), 504(b) of the Clean Air Act & AMR I Sec. III]

(a) The Permittee shall perform the emissions monitoring and analysis procedures or test methods for applicable requirements of this Title V permit. In addition to the sampling, testing and monitoring procedures specified in this permit, the Permittee shall comply with any additional applicable requirements promulgated under the Clean Air Act after permit issuance regardless of whether the permit is revised.

(b) Unless alternative methodology is required by the Clean Air Act (including §§114(a)(3) or 504(b)) and regulations adopted thereunder, the sampling, testing and monitoring required by or used by the Permittee to demonstrate compliance with any applicable regulation or permit condition shall be conducted in accordance with the requirements of 25 Pa Code Chapter 139.

12. Recordkeeping Requirements

[25 Pa Code §127.511 & Chapter 135]

(a) The Permittee shall maintain and make available, upon request by AMS, the following records of monitored information:

(1) The date, place (as defined in the permit) and time of sampling or measurements.

(2) The dates the analyses were performed.

(3) The company or entity that performed the analyses.

(4) The analytical techniques or methods used.

(5) The results of analyses.

(6) The operating conditions as existing at the time of sampling or measurement.

(b) The Permittee shall retain records of the required monitoring data and supporting information for at least five (5) years from the date of the monitoring, sample, measurement, report or application. Supporting information includes calibration and maintenance records and original strip-chart or electronic recordings for continuous monitoring instrumentation, and copies of reports required by the permit.

(c) The Permittee shall maintain and make available to AMS upon request, records including computerized records that may be necessary to comply with the reporting, recordkeeping, and emission statement requirements in 25 Pa Code Chapter 135 (relating to reporting of sources). In accordance with 25 Pa Code Chapter 135, §135.5, such records may include records of production, fuel usage, maintenance of production or pollution control equipment or other information determined by AMS to be necessary for identification and quantification of potential and actual air contaminant emissions. If direct recordkeeping is not possible or practical, sufficient records shall be kept to provide the needed information by indirect means.

13. Reporting Requirements

[25 Pa Code §§127.411(d), 127.442, 127.463(e) 127.511(c), & AMR I Sec. II]

(a) The Permittee shall comply with the reporting requirements for the applicable requirements specified in this Title V permit. In addition to the reporting requirements specified herein, the Permittee shall comply with any additional applicable reporting requirements promulgated under the Clean Air Act after permit issuance regardless of whether the permit is revised.

(b) Pursuant to 25 Pa Code §127.511(c), the Permittee shall submit reports of required monitoring, on or before the following January 31 or July 31, whichever date is earlier, and every six months thereafter, covering the immediately preceding six month periods of July 1 - December 31 and January 1 - June 30 respectively. Instances of deviations (as defined in 25 Pa Code §121.1) from permit requirements shall be clearly identified in the reports. The reporting of deviations shall include the probable cause of the deviations and corrective actions or preventative measures taken, except that sources with continuous emission monitoring systems shall report according to the protocol established

and approved by AMS for the source. The required reports shall be certified by a responsible official.

(c) Any records, reports or information obtained by AMS or referred to in a public hearing shall be made available to the public by AMS except for such records, reports or information for which the Permittee has shown cause that the documents could be considered confidential and protected from disclosure to the public under Section 4013.2 of the Pennsylvania Air Pollution Control Act and consistent with Section 112(d) and 114(c) of the Clean Air Act and 25 Pa Code §127.411(d). The Permittee may not request a claim of confidentiality for any emissions data generated for the Title V facility.

14. Philadelphia Toxic Notification

[AMR VI Sec. II & III]**

(a) The Permittee shall notify AMS of any changes to its "Notice of Toxic Air Contaminant Emissions" within 30 days of the changes.

(b) The requirements of this condition shall not apply to toxic air contaminants emitted from the following:

(1) Combustion process using only commercial fuel, including internal combustion engines;

(2) Retail dry cleaning operations;

(3) Retail and non-commercial storage and handling of motor fuels;

(4) Incineration of waste materials other than liquid, semi-liquid or solid by-product industrial wastes; and

(5) Incidental or minor sources including laboratory-scale operations, fireplaces and household appliances, cooking appliances, general comfort ventilation of occupied spaces, housecleaning operations, residential-scale solvent use and pesticide application, and such other sources or categories of sources which are determined by AMS to be of minor significance for the purposes of this Regulation, or which AMS determines to be more appropriately evaluated by special survey methods.

15. Emission Statement

[25 Pa Code §135.21 & AMR I Sec. II.B.2.]

On or before March 1 of each year, the Permittee shall provide AMS with a statement, in a form as AMS may prescribe, for classes or categories of sources, showing the actual emissions from each source for the previous calendar year and a description of the method used to calculate the emissions. The statement shall contain emission information for the following pollutants:

(1) Oxides of nitrogen and VOCs. The statement for these pollutants shall contain a certification by a company officer or plant manager that the information contained in the statement is accurate. [25 Pa Code 135.21]

(2) Total suspended particulate, PM-10, sulfur oxides, carbon monoxide, hazardous air pollutants, and any other pollutants or information requested by AMS. [Phila. Code Sec. 3-301]

16. Reporting Of Malfunctions

[25 Pa. Code §127.511 & AMR I Sec. II.A.5.]

(a) The Permittee shall, within two (2) hours of knowledge of any occurrence, notify AMS, at 215-685-7580 during business hours and 215-686-4514 during other times, of any malfunction of the source(s) or associated air pollution control devices listed in Table A1 of this permit, which results in, or may result in, the emission of air contaminants in excess of the limitations specified in this permit, or regulation contained in 25 Pa Code Article III or the Philadelphia Air Management Code.

(b) Malfunction(s) which occur at this Title V facility, and pose(s) an imminent danger to public health, safety, welfare and the environment, and would violate permit conditions if the source were to continue to operate after the malfunction, shall immediately be reported to AMS by telephone at the above number.

(c) A written report shall be submitted to AMS within two (2) working days following the (notification of the) incident, and shall describe, at a minimum, the following:

(1) The malfunction(s).

(2) The emission(s).

(3) The duration.

(4) Any corrective action taken.

17. Compliance Certification

[25 Pa Code §127.513]

(a) The Permittee shall submit to AMS and EPA Region III a certification of compliance with each term and condition of this permit including the emission limitations, standards or work practices. This certification shall be submitted by March 1 of each year for the period of the previous calendar year and shall include:

(1) The identification of each term or condition of the permit that is the basis of the certification.

(2) The compliance status.

(3) The methods used for determining the compliance status of the source, currently and over the reporting period.

(4) Whether compliance was continuous or intermittent.

(b) The compliance certifications shall be submitted to AMS and EPA in accordance with the Submissions requirement of this permit specified in Condition #17 of this section.

18. Submissions

[25 Pa Code §§127.402(d) and 127.513(1)]

(a) Reports, test data, monitoring data, notifications, and requests for renewal of the permit shall be submitted to:

Chief of Source Registration
Air Management Services
321 University Ave.
Philadelphia, PA 19104-4543

(b) Any report or notification for the EPA Administrator or EPA Region III should be addressed to:

Associate Director
Office of Enforcement and Permits Review (3AP' 0)
U.S. EPA Region III
1650 Arch Street
Philadelphia, PA 19103-2029

(c) An application, form, report or compliance certification submitted pursuant to this permit condition shall contain a certification by a responsible official as to the truth, accuracy, and completeness as required under 25 Pa Code §127.402(d).

(d) Unless otherwise required by the Clean Air Act or regulations adopted thereunder, this certification and any other certification required pursuant to this permit shall state that based on information and belief formed after reasonable inquiry, the statements and information in the documents are true, accurate, and complete.

SECTION D. SOURCE SPECIFIC REQUIREMENTS

1. Facility

(a) Work Practice Standards

(1) SO2 Sources [SO2 Operating Permit No. SO2-95-039]

(i) The Permittee shall operate its sources consistent with all parameters established in the dispersion model submitted to AMS on August 6, 1999 and listed in the following tables A3 and A4 of SO2 Operating Permit No. SO2-95-039:

TABLE A3-FACILITY INVENTORY LIST (Girard Point Stack Parameters)

Stack ID	COMMENT	UTME	UTMN	Base elevation	Height	Diameter
S-111	1232 FCCU Feed Preheat Furnace B104	482.181	4417.285	4.570	35.052	2.438
S-112	1332 htr H1	482.181	4416.764	4.570	27.432	1.981
S-113	Heater 602	482.176	4416.772	4.570	26.822	1.448
S-114	Heater 601	482.190	4416.808	4.570	25.603	1.372
S-115	Heater 600	482.176	4416.808	4.570	26.822	1.448
S-116	1332 htr H2	482.194	4416.762	4.570	26.822	1.372
S-117	Heater 400 & 401 comb	482.142	4416.809	4.570	30.480	2.286
S-119	1332 htr H3	482.186	4416.756	4.570	27.432	1.981
S-120	AVU 137 UNIT F1 & F2 FUEL BURNING	481.793	4417.475	4.570	60.960	3.962
S-122	AVU 137 UNIT F3 FUEL BURNING	481.774	4417.498	4.570	23.012	1.372
S-123A	B101 htr 231 Stack A	482.150	4416.710	4.570	22.860	1.052
S-123B	B101 htr 231 Stack B	482.153	4416.705	4.570	22.860	1.052
S-123C	B101 htr 231 Stack C	482.156	4416.701	4.570	22.860	1.052
S-124	H1 htr 433 FUEL BURNING	482.072	4417.018	4.570	41.453	2.896
S-125	#3 BOILER HOUSE stack	481.845	4416.765	4.570	60.960	5.791
S-153	1231 Flare	482.348	4417.595	4.570	62.880	1.110
S-154	1232 Flare	482.300	4417.549	4.570	60.360	1.110
S-155	433 Flare	481.960	4417.431	4.570	81.700	1.110
S-156	1232 FCCU Unit/ CO boiler stack	482.096	4417.363	4.570	45.720	2.896

TABLE A4-FACILITY INVENTORY LIST (Point Breeze Stack Parameters)

Stack ID	COMMENT	UTME (km)	UTMN (km)	Base elevation (m)	Height (m)	Diameter (m)
S-801	210A – HTR H101	482.829	4418.297	7.250	41.605	2.254

S-802	210B – HTR H201	482.838	4418.290	7.250	60.817	2.896
S-803	210C – HTR 13H1	482.910	4418.269	7.470	66.396	3.232
S-804	UNIT 859 1H-1 Stack	482.700	4417.991	5.791	33.528	2.134
S-807	MAGNAFORMER 860 - HTRS 2H1, 2H2 & 2H4, STACK A common	482.868	4418.026	5.790	35.636	1.905
S-808	MAGNAFORMER 860 - 2H1, 2H2 & 2H4 STACK B common	482.875	4418.022	5.790	35.636	1.905
S-809	MAGNAFORMER 860 - HTR 2H3 AND 2H5 STACK A common	482.865	4418.014	5.790	33.528	2.045
S-810	MAGNAFORMER 860 - HTRS 2H3 & 2H5 – STACK B common	482.872	4418.010	5.790	33.528	2.045
S-811	MAGNAFORMER 860 - HTR 2H6	482.882	4418.052	5.760	33.528	1.270
S-812	MAGNAFORMER 860 - HTR 2H7	482.885	4418.058	5.760	33.528	1.372
S-813	MAGNAFORMER 860 HTR 2H8	482.888	4418.063	5.760	33.528	1.372
S-818	MAGNAFORMER 864 - HTR PH1	483.132	4418.262	7.890	39.091	1.486
S-819	MAGNAFORMER 864 - HTR PH2 & HTR PH4	483.111	4418.263	7.890	33.528	2.122
S-820	MAGNAFORMER 864 - HTR PH3	483.101	4418.255	7.890	33.528	2.046
S-822	MAGNAFORMER 864 - HTR PH5	483.101	4418.269	7.890	33.528	2.046
S-822	MAGNAFORMER 864 - HTR PH7	483.142	4418.269	7.890	33.528	1.372
S-823	MAGNAFORMER 864 - HTR PH11	483.151	4418.268	7.890	33.528	1.486
S-824	MAGNAFORMER 864 - HTR PH12	483.163	4418.272	7.890	36.576	1.626
S-825	DISTILLATE HDS 865 - HTR 11H1	483.106	4418.379	7.800	42.680	1.830
S-826	DISTILLATE HDS 865 - HTR 11H2	483.119	4418.379	7.800	55.169	1.880
S-827	GAS OIL HDS 866 - HTR 12H1	483.145	4418.382	7.830	38.100	1.524
S-828	FCCU 868 8H-101	483.210	4418.154	6.710	35.947	1.308
S-976	NORTH FLARE - SOUTH YARD	482.807	4417.911	5.300	90.500	2.930
S-977	SOUTH FLARE - SOUTH YARD	482.719	4417.582	3.320	90.130	2.930
S-985	FCCU RETURN STACK 868 8H-103	483.214	4418.253	6.710	60.960	2.700
S-983	UNIT 867 SRU COMBUSTION	482.648	4418.010	5.670	70.100	1.070

(ii) The Permittee shall remodel to demonstrate compliance with the National Ambient Air Quality Standard (NAAQS) for SO_2 if AMS has cause to believe that the attainment or maintenance of the standard is in jeopardy.

(2) Process unit turnarounds. Purging of volatile organic compounds during depressurization of reactors, fractionating columns, pipes, or vessels during unit shut-down, repair, inspection, or startup shall be performed in such a manner as to direct the volatile organic vapors to a fuel gas system, flare, or vapor recovery system until the internal pressure in such equipment reaches 19.7 psia (136 kilopascals). [AMS letter dated 4/14/94; 25 PA Code §129.55(d)]

(3) The Permittee may burn non-commercial fuels in accordance with Air Management Code Section 3-207(2), AMR III, Section 1.A and 25 PA Code §123.22(e)(3).

(4) All Processes must vent to control devices specified in the process flow diagrams included in Section A. of this permit unless changes to the facility's configuration are made pursuant a valid plan approval or installation permit.

(5) Each boiler and heater shall only burn fuel types as listed in Table A-1.

(b) Testing Requirements

[25 PA Code §139]

(1) If at any time AMS has cause to believe that air contaminant emissions from any source(s) listed in Section A of this permit may be in excess of the limitations specified in this permit, or established pursuant to, any applicable rule or regulation contained in 25 PA Code Article III, the Permittee shall be required to conduct whatever test are deemed necessary by AMS to determine the actual emission rate(s).

(2) The following performance tests methods shall be used to demonstrate compliance with the emission limitations:

(i) U.S.E.P.A. Reference Method 7E shall be used for nitrogen oxides.

(ii) U.S.E.P.A. Reference Method 5 and 202 shall be used for particulate matter.

(iii) U.S.E.P.A. Reference Method 9 shall be used for opacity. At a minimum, opacity shall be determined as an average of 24 consecutive observations recorded at 15-second intervals.

(iv) U.S.E.P.A. Reference Method 10 shall be used for carbon monoxide.

(v) ASTM D1266, D129, D1552, D2622 or D270 shall be used for sulfur in fuel.

(3) Compliance determination shall consist of the arithmetic means of results of three separate runs for each source test using U.S.E.P.A. Reference Methods 5, 7E, and 10. The source test shall be consistent with U.S.E.P.A. designated test methods and 25 PA Code §139. The Permittee shall submit a test protocol to AMS for approval at least 30 days before the test date. The test report shall be submitted to AMS within 60 days of completing the stack test.

(4) The Permittee may use alternative test methods to those listed in this section if they are given prior approval by AMS in accordance with 25 Pa Code §139.3 and the Permittee shall only use test methods authorized in accordance with 25 Pa. Code §139.

(5) SO2 Sources

(i) The Permittee shall test for sulfur content of the refinery fuel gas burned on a daily basis.

(ii) The Permittee shall test for sulfur content of the fuel upon receipt of each fuel oil delivery.

(iii) ASTM 4294 for sulfur in fuel can be used when the Permittee supports the data with a quality control plan and demonstrates the ability to accurately perform this test.

(iv) ASTM D5453 shall be used to determine hydrogen sulfide content of the fuel gas streams. The Permittee shall dedicate separate test equipment for liquid streams and gaseous streams. The Permittee shall calibrate the Antek equipment before each use. ASTM 5504 may be used when the Antek equipment is out of service or unavailable.

(c) Monitoring Requirements

[25 PA Code §§127.511 & 139, §§114(a)(3) & 504(b) of Clean Air Act]

The Permittee shall monitor the following :

(1) visible and fugitive emissions during operation daily.

(2) All CEMs shall meet the requirements of 25 PA Code Chapter 139.

(d) Recordkeeping Requirements

[25 PA Code §§127.511, 135.21, 135.5, 139, and SO2 Operating Permit No. SO2-95-039]

The Permittee shall keep the following records:

(1) Records of the daily inspection for visible and fugitive emissions and any corrective actions taken.

(2) Baseline operating records, sampling data concurrent with any emission tests, and any supporting calculations used to determine emissions;

(3) Records of the occurrence or duration of each startup, shutdown, and malfunction of operation of a combustion unit;

(4) Records of the occurrence, duration, and cause (if known) of each malfunction of air pollution equipment or monitoring equipment used to comply with the restrictions or monitoring provisions of this permit;

(5) For monitoring equipment used to comply with the monitoring requirements of this permit, records documenting the completion of installation, calibration checks, and maintenance.

(e) Reporting Requirements

[25 Pa Code §127.511(c) & AMR I Section II]

(1) The Permittee shall quarterly. submit to AMS reports of each CEMs in accordance to Chapter 139 and PA Continuous Source Monitoring Manual.

(2) SO2 Sources

(i) The Permittee shall submit to AMS the CEM report for SO2 in accordance to Chapter 139 procedure quarterly. The report shall contain, at the minimum, the following information:

(A) The date, time duration, and magnitude of excess emissions.

(B) The reason for any excessive emissions.

(C) Corrective action taken.

(D) For each day, the number of valid monitoring hours, the causes for any invalid monitoring hours contained in daily average and corrective actions taken.

(ii) The results of all quality control and quality assurance actions taken. The Permittee shall submit to AMS quarterly reports of the performance of the facility using the City of Philadelphia Monitoring Report Form as required in Section C.11 of this permit. These reports shall be submitted on or before January 31, April 30, July 31, and October 31 for the previous quarter. These reports shall consist of the following:

(A) A description of any deviations from permit requirements that occurred during the three-month reporting period, the probable cause of such deviations, and corrective actions or preventive measures taken;

(B) A description of any malfunction of processes, air pollution control equipment, or monitoring equipment that occurred during the three-month reporting period, the date and duration of the incidents, the probable cause of the incidents, and actions taken to remediate such incidents;

(C) A description of any sources which have not operated in more than one year.

(3) Annual compliance certification in accordance with Section C.16.

(4) General Provisions Applicability to 40 CFR 63 Subparts F, G, and H

(i) Table 3 of 40 CFR 63 Subpart F specifies the provisions of 40 CFR Subpart A that apply and those that do not apply to owners and operators of sources subject to 40 CFR Subparts F, G, and H. [40 CFR 63.103(a)]

(ii) Table 6 of 40 CFR 63 Subpart CC specifies the provisions of 40 CFR Subpart A that apply and those that do not apply to owners and operators of sources subject to 40 CFR Subpart CC. [40 CFR 63.642(c)]

(iii) Table 1 of 40 CFR 63 Subpart Q specifies the provisions of 40 CFR Subpart A that apply and those that do not apply to owners and operators of sources subject to 40 CFR Subpart Q. [40 CFR 63.400(b)]

(iv) Owners and operators of sources subject to 40 CFR Subpart Y must comply with the requirements of 40 CFR Subpart A in accordance with the provisions for applicability of 40 CFR subpart A to 40 CFR Subpart Y Table 1. [40 CFR 63.560(c)]

(5) Semi-Annual Progress Report in accordance with Consent Decree Order 05-CV-2866. Each report shall contain the following:

(i) Progess report on the implementation of the requirement s of "Affirmative Relief/Environmental Projects".

(ii) A summary of the emission data

(iii) Description of any problems anticipated with respect to meeting the requirements of Section V of the Consent Decree.

(iv) Any additional matter that the Permittee believes should be brought to the attention of EPA and AMS.

(6) The above Semi-Annual Progess Report shall be certified by the person responsible for the environmental management at the facility or by person responsible for overseeing the implementation of the Decree as follows: [Decree Order 05-CV-2866]

"I certify under penalty of law that this information was prepared under my direction or supervision in accordance with a system designed to assure that qualified personnel properly gather and evaluate the information submitted. Based on my directions and my inquiry of the person(s) who manage the system, or the person(s) directly responsible for gathering the information, the information submitted is, to the best of my knowledge and belief, true, accurate, and complete."

2. Group 01 – Boilers

Girard Point equipment numbered CU018, CU020, and CU021.

(a) Emission Limitations

(1) Carbon Monoxide (CO) emissions for each unit may not exceed 1% by volume of exhaust gases. [AMR VIII, Section II]

(2) Emission from the No. 3 Boilerhouse (CU-018, CU-020, CU-021) shall not exceed the following in any rolling 12-month period. [AMS Plan Approval 08080, 11/2/10]

(i) 253.7 tons of NOx on rolling 12-month period

(ii) 152.5 tons of SO2 on rolling 12-month period

(iii) 416.8 tons of CO on rolling 12-month period

(iv) 50.6 tons of PM/PM10 on rolling 12-month period

(v) 34.0 tons of VOC on rolling 12-month period

(3) The Permittee shall ensure that the sources listed below do not exceed the following emission limitations:

Source ID	CO	VOC	Particulate[a]	PM-10	NOx	SO_2[d]	Rolling 365 Day Average SO_2 Emission Rate[d]
			Lbs Pollutant/MMBTU				
CU018 (GP)	---[c]	---	0.10[b]	---	0.040[a]	0.53	0.33
CU020 (GP)	---[c]	---	0.10[b]	---	0.040[a]	0.53	0.33
CU021 (GP)	---[c]	---	0.10[b]	---	0.040[a]	0.53	0.33

[a] - Consent Decree, AMS Plan Approval 08080 dated 11/2/10. The emission are based on rolling 365-day basis. NOx emissions are limited to 0.33 lb/MMBTU on rolling 30-day average using the hourly CEM data for each boiler in accordance with RACT Plan Approval 8/1/2000 and amended 10/7/02

[b] - Complies with 25 PA Code 123.11. This streamlined permit condition assures compliance with AMS Regulation II, Section V.

[c] - This source shall comply with the permit condition in 2.(a)(1) of this section.

[d] - SO2 Operating Permit No. SO2-95-039. This streamlined permit condition assures compliance with 25 PA code 123.22, AMS Permit 98001 and AMS approval letter dated March 18, 1998, and AMS Plan Approval 08080 dated 11/2/10

GP - Girard Point

(b) Work Practice Standards

(1) NOx Affected Sources

(i) The Permittee of each NO_x budget source and each NO_x budget unit at the source shall hold NO_x allowances available for compliance deductions under 25 Pa Code 145.54 (relating to compliance), as of the NO_x allowance transfer deadline, in the unit's compliance account and the source's overdraft account in an amount not less than the total NO_x emissions for the control period from the unit, as determined in accordance with 25 Pa Code 145.70-145.76 (relating to recordkeeping and reporting requirements) plus any amount necessary to account for actual heat input under 25 Pa Code 145.42(e) (relating to NO_x allowance allocation) for the control period or to account for excess emissions for a prior control period under 25 Pa Code 145.54(d) or to account for withdrawal from the NO_x budget trading program, or a change in regulatory status, of a NOx budget opt-in unit under 25 Pa Code 145.86 and 145.87 (relating to withdrawal from NO_x Budget Trading Program; and opt-in source change in regulatory status). [25 Pa Code § 145.6(b)(1)]

(ii) Each ton of NOx emitted in excess of the NOx budget emissions limitation shall constitute a separate violation. [25 Pa Code §145.6(b)(2)]

(iii) The Permittee of a NO_x budget unit that has excess emissions in any control period shall do the following: [25 Pa Code § 145.6(c)]

(A) Surrender the NOx allowances required for deduction under 25 Pa Code §145.54(d)(1)

(B) Pay any fine penalty or assessment or comply with other remedy imposed under 25 Pa Code § 145.54(d)(3) of the act.

(iv) Except as provided under 25 Pa Code 145.11 (relating to alternate NOx authorized account representative), each NOx budget source, including all NOx budget units at the source, shall have only one, NOx authorized account representative, with regard to all matters under the NOx Budget Trading Program concerning the source or any NOx budget unit at the source. [25 Pa Code §145.10(a)]

(v) Each submission under the NOx Budget Trading Program shall be submitted, signed and certified by the NOx authorized account representative for each NOx budget source on behalf of which the submission is made. [25 Pa Code 145.10(e)]

(2) Each No 3 Boilerhouse boiler (CU018, CU020, & CU021) shall burn only refinery fuel gas and acid soluble oil (including cutter and line flush material), except that fuel oil burning will be allowed during periods of natural gas curtailment, test runs, and operator training. [AMS Plan Approval 08080, 11/2/10]

(3) Total combustion of acid soluble oil (ASO) at the No. 3 Boiler House shall not exceed 8.92 barrels per day on a rolling 365-day basis. Total combustion of ASO system line wash material at the No. 3 Boiler House shall not exceed 35.7 barrels per day on a rolling 365-day basis. [AMS Plan Approval 08080, 11/2/10]

(4) Total heat input to the No. 3 Boilerhouse (CU-018, CU-020, CU-021) shall not exceed 12,685,000 MMBTU per year (HHV) on a rolling 365-day basis. [AMS Plan Approval 08080, 11/2/10]

(5) The hourly heat input to Boiler Nos. 37 (CU-018) and 39 (CU-020) shall be capped at 495 MMBTU/hr for each boiler. The hourly heat input to Boiler No. 40 (CU-021) shall be capped at 660 MMBTU/hr. [Case-by-case RACT, 25 PA Code Sections 129.91-95, AMS Plan Approval 08080, 11/2/10]

(6) The No. 3 Boilerhouse (CU-018, CU-020, CU-021) shall be equipped with continuous monitors and recorders for NOx and O2. The continuous monitors and recorders shall meet the requirements of 25 PA Code Chapter 139.

(7) An annual adjustment or tune-up shall be performed on the combustion process for each boiler by December 31st of each year not to exceed 12 months between tunings. [Case-by-case RACT, 25 Pa Code §§129.91-95, Section 2G and 3, 25 PA Code §129.93(b)(2)-(5)] The actual test may be performed anywhere between October 1 and December 31 for any source.

(8) The hydrogen sulfide content of the natural gas/refinery fuel gas burned in the boilers is limited to 0.1 gr/dscf. [AMS Permit 94329 dated December 27, 1994, paragraph 3, and AMS Permit 94145 to 94150 dated September 26, 1994, paragraph 3]

(9) The Permittee shall operate Ultra Low NOx burners on CU018, CU020, and CU021 (Girard Point). [Case-by-case RACT, 25 Pa Code §§129.91-95, Section 2A]

(10) The Permittee shall ensure that all fuel burning sources are capped at the heat input specified in the table below:

Source ID	Hourly Heat Input Cap (MMBTU/hr)	Rolling 12-month Heat Input Cap (MMBTU/yr)
CU018 (GP)	495[a]	---
CU020 (GP)	495[a]	---
CU021 (GP)	660[a]	---

[a] - Case-by-case RACT, 25 Pa Code §§129.91-95, Section 2C.

(11) Beginning January 31, 2016, the Permittee shall conduct tune-up for each boiler to demonstrate compliance with 40 CFR 63 Subpart DDDDD

(i) Tune-ups shall be conduction every 5 years on boiler with continuous oxygen trim system. [40 CFR 63.7540(a)(12)]

(ii) Each tune-up shall include: [40 CFR 63.7540(a)(10)]

(A) As applicable, inspect the burner, and clean or replace any components of the burner as necessary (the Permittee may delay the burner inspection until the next scheduled unit shutdown). At units where entry into a piece of process equipment or into a storage vessel is required to complete the tune-up inspections, inspections are required only during planned entries into the storage vessel or process equipment;

(B) Inspect the flame pattern, as applicable, and adjust the burner as necessary to optimize the flame pattern. The adjustment should be consistent with the manufacturer's specifications, if available;

(C) Inspect the system controlling the air-to-fuel ratio, as applicable, and ensure that it is correctly calibrated and functioning properly (the Permittee may delay the inspection until the next scheduled unit shutdown).

(D) Optimize total emissions of CO. This optimization should be consistent with the manufacturer's specifications, if available, and with any NO_x requirement to which the unit is subject;

(E) Measure the concentrations in the effluent stream of CO in parts per million, by volume, and oxygen in volume percent, before and after the adjustments are made (measurements may be either on a dry or wet basis, as long as it is the same basis before and after the adjustments are made). Measurements may be taken using a portable CO analyzer;

(iii) The Permittee may delay the burner inspection for the boiler with continuous oxygen trim system specified in Section D.2(b)(11)(ii)(A) until the next scheduled or unscheduled unit shutdown, but you must inspect each burner at least once every 72 months. [40 CFR 63.7540(a)(12)]

(iv) If the unit is not operating on the required date for a tune-up, the tune-up must be conducted within 30 calendar days of startup. [40 CFR 63.7540(a)(13)]

(c) Testing Requirements

[25 PA Code §139]

(1) NOx Affected Sources

(i) The Permittee shall comply with the initial certification and recertification procedures in accordance with 25 Pa Code §145.71. [25 Pa Code §145.71(b)]

(ii) The NOx authorized account representative shall submit an application to the Department within 45 days after completing all initial certification or recertification tests required under 25 Pa Code 145.71 (relating to initial certification and recertification procedures) including the information required under 40 CFR Part 75, Subpart H. [25 Pa Code §145.74(c)]

(d) Monitoring Requirements

[25 PA Code §§127.511 & 139, §§114(a)(3) & 504(b) of Clean Air Act]

The Permittee shall monitor the following:

(1) The proper operation of each unit in accordance with manufacturers recommended operations and maintenance.

(2) Compliance with the NOx emission limitations listed in Section D.2(a)(5) shall be calculated on a 30-day rolling average based on hourly averages of CEM data. [Case-by-case RACT, 25 Pa Code §§129.91-95, Section 4B]

(3) The fuel type and fuel usage for each boiler.

(4) The Permittee shall monitor all fuel input to boilers with BTU limitations in Section D.2(b)(4),(5), & (11) on a daily basis to ensure capacity limits are not exceeded or install fuel limiting devices on the boilers to keep capacities below the allowable limits. The compliance method must be in place by June 30th 2000. [Case-by-case RACT, 25 Pa Code §§129.91-95]

(5) The Permittee shall demonstrate compliance with the SO2 emission limitations by monitoring the sulfur content of the fuel burned. [SO2 Operating Permit No. SO2-95-039, and Permits 94145 to 94150 dated September 26, 1994, paragraph 6]

(6) NOx Affected Sources

(i) 25 Pa Code 145.6(a) - Standard requirements – Monitoring Requirements.

(A) The Permittee and the NOx authorized account representative of each NOx budget source and each NOx budget unit at the source shall comply with the monitoring requirements of 25 Pa Code 145.70-145.76 (relating to recordkeeping and recording requirements).

(B) The emissions measurements recorded and reported in accordance with 25 Pa Code 145.70-145.76 shall be used to determine compliance by the unit with the NOx budget emissions limitation under 25 Pa Code 145.6(c).

(ii) 25 Pa Code 145.6(b) - Standard requirements – NOx Requirements.

(A) The Permittee of each NOx budget source and each NOx budget unit at the source shall hold NOx allowances available for compliance deductions under 25 Pa Code 145.54 (relating to compliance), as of the NOx allowance transfer deadline, in the unit's compliance account and the source's overdraft account in an amount not less than the total NOx emissions for the control period from the unit, as determined in accordance with 25 Pa Code 145.70-145.76 (relating to recordkeeping and reporting requirements) plus any amount necessary to account for actual heat input under 25 Pa Code 145.42(e) (relating to NOx allowance allocation) for the control period or to account for excess emissions for a prior control period under 25 Pa Code 145.54(d) or to account for withdrawal from the NOx budget trading program, or a change in regulatory status, of a NOx budget opt-in unit under 25 Pa Code 145.86 and 145.87 (relating to withdrawal from NOx Budget Trading Program; and opt-in source change in regulatory status).

(B) A NOx budget unit shall be subject to the above requirements in Section D.2.(d)(7) (ii)(A) starting on May 1, 2003, or the date on which the unit commences operation, whichever is later.

(v) The Permittee of a unit that is not subject to an acid rain emissions limitation shall comply with requirements of 40 CFR 75.62, except that the monitoring plan is only required to include the information required by 40 CFR Part 75, Subpart H. [25 Pa Code §145.74(b)(2)]

(7) The Permittee shall daily monitor the fuel type and fuel usage on a daily basis of the No 3 Boilerhouse to ensure the heat inputs limits are not exceeded. [Case-by-case RACT, 25 PA Code Sections 129.91-95 & SO2 Operating Permit No. SO2-95-039, AMS Plan Approval 02184 dated 5/13/04, AMS Plan Approval 08080, 11/2/10]

(8) The Permittee shall demonstrate compliance with SO2 limits of the No. 3 Boilerhouse boilers by monitoring the sulfur content of fuel burned. [Case-by-case RACT, 25 PA Code Sections 129.91-95 & SO2 Operating Permit No. SO2-95-039, [AMS Plan Approval 08080, 11/2/10]

(9) The Permittee shall monitor and record the concentration of Hydrogen Sulfide in the refinery fuel gas to No. 3 Boilerhouse with a continuous monitoring and recording system. The monitoring system shall meet the requirements of 25 PA Code Chapter 139 and 40 CFR 60.105(a)(4). [AMS Plan Approval 08080, 11/2/10]

(e) Recordkeeping Requirements

[25 PA Code §§127.511, 135.21, 135.5 & 139]

The Permittee shall keep the following records:

(1) Fuel type, fuel usage, and sulfur analysis of the fuel oil burned on a daily basis.

(2) Records of annual adjustments or tuneups. [Case-by-case RACT, 25 Pa Code §§129.91-95, Section 5; 25 PA Code §129.93(b)(3)(i)-(v)]

(3) CEM recorder records.

(4) NOx Affected Sources [NOx Operating Permit]

(i) The Permittee shall monitor and report NOx emissions in accordance with 40 CFR Part 96, Subpart HHHH (relating to monitoring and reporting), and establish a CAIR-authorized account representative and general account, in accordance with 40 CFR Part 96, Subparts BBBB and FFFF (relating to CAIR designated representative for CAIR NOx Ozone Season sources; and CAIR NOx Ozone Season Allowance Tracking System), incorporated into Subchapter D by reference, for the purposes of ensuring continued compliance with the non-EGU NOx Trading Program budget limitation 25 Pa Code 145.8(d)(1) and of retiring CAIR NOx Ozone Season allowances. [25 Pa Code 145.8(d)(2)]

(ii) A CAIR-authorized account representative and general account shall be established in accordance with 40 CFR Part 96, Subparts BB and FF (relating to CAIR designated representative for CAIR NOx sources; and CAIR NOx allowance tracking system), incorporated into 25 Pa Code 145 Subchapter D by reference, for the purpose of retiring CAIR NOx allowances. [25 Pa Code 145.8(d)(3)]

(iii) If the combined NOx emissions from all units subject to 25 Pa Code 145 (in the state of Pennsylvania) exceed 3,438 tons in an ozone season, then a unit whose actual emissions exceed the unit's allowable emissions for that

ozone season, as determined under 25 Pa Code 145.8(d)(5), shall surrender to the Pa DEP by April 30 of the year following the ozone season one CAIR NOx Ozone Season allowance and one CAIR NOx allowance for each ton of excess emissions. A unit whose excess emissions are 0.5 ton or greater of the next excess ton shall surrender 1 full ton of CAIR NOx allowances (banked or current) for that excess emission. Units under common ownership may include the allowable and actual emissions from multiple units to determine whether a unit must surrender allowances. [25 Pa Code 145.8(d)(6)]

(iv) If a facility's allowable emissions exceed the facility's actual emissions for an ozone season, the owner or operator may deduct the difference or any portion of the difference from the actual emissions of units under the facility's common control that are subject to § § 129.201—129.203 (relating to boilers; stationary combustion turbines; and stationary internal combustion engines). [25 Pa Code 145.8(d)(11)]

(5) The Permittee shall keep the following records for the No 3 Boilerhouse boilers: [AMS Plan Approval 08080, 11/2/10]

(i) Daily fuel type, fuel usage, and refinery fuel gas heating value for each boiler.

(ii) No. 3 Boilerhouse rolling 12-month emissions on a monthly basis to demonstrate compliance with the emission limits. NOx emissions shall be determined based on CEM data. Other emissions shall be determined based on AMS-approved stack test data, AP-42 emissions factors, or other AMS-approved emission factors.

(iii) Total heat input to the No. 3 Boilerhouse in MMBTU per year (HHV) on a rolling 365-day basis.

(6) Maintain on-site and submit, if requested by the Administrator, an annual report containing the following information to demonstrate compliance with 40 CFR 63 Subpart DDDDD [40 CFR 63.7540(a)(10)(vi)]

(i) The concentrations of CO in the effluent stream in parts per million by volume, and oxygen in volume percent, measured at high fire or typical operating load, before and after the tune-up of the process heater;

(ii) A description of any corrective actions taken as a part of the tune-up; and

(iii) The type and amount of fuel used over the 12 months prior to the tune-up, but only if the unit was physically and legally capable of using more than one type of fuel during that period. Units sharing a fuel meter may estimate the fuel used by each unit.

(f) Reporting Requirements

(1) NOx Affected Sources

(i) To surrender allowances under 25 Pa Code 145.8(d)(6), the Permittee shall surrender the required CAIR NOx Ozone Season allowances and CAIR NOx allowances to the Pa DEP designated NOx allowance tracking system account and provide to the PA DEP, in writing, the following: [25 Pa Code 145.8(d)(7)]

(A) The serial number of each allowance surrendered.

(B) The calculations used to determine the quantity of allowances required to be surrendered.

(ii) If the Permittee fails to comply with 25 Pa Code 145.8(d)(6), Permittee shall by June 30 surrender three CAIR NOx Ozone Season allowances and three CAIR NOx allowances of the current or later year vintage for each ton of excess emissions as calculated under 25 Pa Code 145.8(d)(6). [25 Pa Code 145.8(d)(8)]

(iii) The surrender of CAIR NOx ozone season allowances and CAIR NOx allowances under 25 Pa Code 145.8(d)(6) does not affect the liability of the owner or operator of the unit for any fine, penalty or assessment, or an obligation to comply with any other remedy for the same violation, under the CAA or the act. [25 Pa Code 145.8(d)(9)]

(A) For purposes of determining the number of days of violation, if a facility has excess emissions for the period May 1 through September 30, each day in that period (153 days) constitutes a day in violation unless the owner or operator of the unit demonstrates that a lesser number of days should be considered.

(B) Each ton of excess emissions is a separate violation.

(2) For each boiler, the Permittee shall submit the following:

(i) Submit all notifications required by 40 CFR 63.7545;

(ii) Submit semiannual compliance reports in accordance with 40 CFR 63.7550 and Table 9 of 40 CFR 63 Subpart DDDDD;

(iii) Submit immediate startup, shutdown, and malfunction reports in accordance with 40 CFR 63.10(d)(5) and Table 9 of 40 CFR 63 Subpart DDDDD.

(iv) Submit a signed statement in the Notification of Compliance Status report that indicates that the Permittee conducted a tune-up of the unit. [40 CFR 63.7530(d)]

(v) The Notification of Compliance Status shall include a signed certification that the energy assessment was completed according to 40 CFR 63 Subpart DDDDD Table and is an accurate depiction of your facility at the time of the assessment. [40 CFR 63.7530(e)]

3. Group 02 – Process Heaters

Girard Point equipment numbered CU004, CU005, CU006, CU007, CU008, CU009, CU010, CU011, CU012, CU013, CU014, CU015, CU016, and CU017. Point Breeze equipment numbered CU101, CU102, CU103, CU108, CU109, CU110, CU111, CU112, CU113, CU114, CU115, CU118, CU123, CU124, CU125, CU126, CU127, CU128, CU129, CU-137, CU-138 and CU-139.

(a) Emission Limitations

(1) Each unit shall not burn any fuel gas that contains hydrogen sulfide (H2S) in excess of 230 mg/dscm (0.10 gr/dscf) [40 CFR 60.104(a)(1), Consent Decree Order 05-CV-2866]

(2) Carbon Monoxide emissions from each heater shall not exceed 1% of the exhaust gases [AMR VIII]

(3) Emission from the 1332 CRU H2 Heater (CU-009) shall not exceed as follows:

(i) Carbon Monoxide emissions shall not exceed 400 ppmdv at 3% oxygen, [40 CFR 63 Subpart DDDDD, Table 1, 25 Pa Code §§127 1, AMS Plan Approval 05124 dated 10/4/05]

(ii) Nitrogen Oxide emission shall not exceed 0.04 lbs/MMBTU at 3% O2 (3-run average) [25 Pa Code 127.1, AMS Plan Approval 05124 dated 10/4/05]

(4) Emission from the 1332 H-401 and H-400 Heaters (CU-010 and CU-011) shall not exceed as follows:

(i) The combined Nitrogen Oxide (NOx) emissions from the heaters shall not exceed 62.7 tons per year on a rolling 12-month basis [AMS Plan Approval 09040, dated 2/1/10]

(ii) Nitrogen Oxides (NOx) emissions into the atmosphere from the shared exit stack of the process heaters after the SCR system shall not exceed 0.06 lb/MMBTU on a 365 rolling operating day basis, calculated daily [AMS Plan Approval 09040, dated 2/1/10]

(A) During these natural draft operating periods the maximum allowable NOx limitation will be 0.156 lb/MMBTU, as defined in the RACT Plan Approval (8/1/2000). All emissions during the natural draft duration shall be counted toward the annual limitation in Section D.3(a)(4)(ii).

(iii) Ammonia (NH3) emission from the shared exit stack of process heaters after the SCR system shall not exceed 1.16 lbs/hr. [25 Pa Code 127.1, AMS Plan Approval 09040, dated 2/1/10]

(iv) Particulate matter emissions from the Heater 1332 H-401 (CU-010) shall not exceed 0.17 lb/MMBTU and 1332 H-400 (CU-011) shall not exceed 0.19 lb/MMBTU [25 PA Code 123.11(a)(2) and AMS Reg. II, Sec. V, AMS Plan Approval 09040, dated 2/1/10]

(5) Emission from the 210 H-201 Heater (CU-102) shall not exceed as follows:

(i) NOx emissions shall not exceed 31.8 ton per year on a rolling 365-day basis [AMS Plan Approval 10180, dated 2/3/11]

(ii) NOx emissions shall not exceed 0.030 lbs/MMBTU on a rolling 365-day basis [AMS Plan Approval 10180, dated 2/3/11]

(iii) Particulate matter emissions shall not exceed 0.10 lbs/MMBTU gross heat input. [AMR II. Section V.2, AMS Plan Approval 10180, dated 2/3/11]

(iv) Sulfur dioxide emissions shall not exceed 500 ppmvd [Plan Approval 10180 dated 2/3/11, Plan Approval 00186 dated 3/22/03, 25 PA Code 123.21(b)]

(7) Emission from the 210 13H-1 Heater (CU-103) shall not exceed as follows:

(i) Sulfur dioxide (SO2) emissions shall not exceed 11.01 tons in any rolling 12-month period. [AMS Plan Approval 02184 dated 8/12/04]

(8) Emission from the 870 H1 and H2 Heaters (CU-137 and CU-138) shall not exceed as follows:

(i) Nitrogen Oxide (NOx) emissions from the heaters shall not exceed 0.035 lb/MMBTU. [AMS Plan Approval 02184, dated 8/12/04]

(ii) Carbon monoxide emissions from the heaters shall not exceed 400 ppmdv at 3% oxygen [25PA Code 127.1 (BAT), AMS Plan Approval 02184, dated 8/12/04]

(9) Emission from the 859 1H-1 Heater (CU-139) shall not exceed as follows:

(i) Carbon monoxide emission shall not exceed 0.0824 lb/MMBTU based on three one-hour stack tests. [AMS Plan Approval 06144 dated 1/28/08]

(10) Emission from the Unit 433 Isostripper H-1 Heater (CU-017) shall not exceed as follows: [AMS Plan Approval 06050, dated 12/4/06, PM, CO, and SO2 limits assure compliance with 25 PA Code 123.11 & 123.22, AMR II Sec VII, AMR VIII Sec II]

(i) NOx emissions shall not exceed 39.9 ton per year on a rolling 365-day basis

(ii) NOx emissions shall not exceed 0.035 lbs/MMBTU on an hourly basis using CEMs

(iii) Particulate matter (total PM/PM10) emissions shall not exceed 8.5 ton per year on a rolling 365-day basis.

(iv) Particulate matter (total PM/PM10) emissions shall not exceed 0.00745 lbs/MMBTU gross heat input.

(v) Carbon monoxide emissions shall not exceed 112.2 ton per year on a rolling 365-day basis.

(vi) Carbon monoxide emissions shall not exceed 0.0985 lbs/MMBTU gross heat input.

(vii) Sulfur dioxide emissions shall not exceed 37.6 ton per year on a rolling 365-day basis.

(viii) Sulfur dioxide emissions shall not exceed 0.033 lbs/MMBTU gross heat input.

(11) Emission from the Unit 859 1H-1 Heater (CU-139) shall not exceed as follows: [AMS Plan Approval 06144, dated 1/29/08, PM, CO, and SO2 limits assure compliance with 25 PA Code 123.11 & 123.22, AMR II Sec VII, AMR VIII Sec II, and 40 CFR Subpart DDDDD Table 1]]

(i) NOx emissions shall not exceed 8.6 ton per year on a rolling 365-day basis

(ii) NOx emissions shall not exceed 0.02 lbs/MMBTU on an hourly based on 3-one-hour stack test

(iii) Particulate matter (total PM/PM10) emissions shall not exceed 3.2 ton per year on a rolling 365-day basis.

(iv) Particulate matter (total PM/PM10) emissions shall not exceed 0.00745 lbs/MMBTU gross heat input.

(v) Carbon monoxide emissions shall not exceed 35.4 ton per year on a rolling 365-day basis.

(vi) Carbon monoxide emissions shall not exceed 0.0825 lbs/MMBTU gross heat input.

(vii) Sulfur dioxide emissions shall not exceed 5.2 ton per year on a rolling 365-day basis.

(viii) Sulfur dioxide emissions shall not exceed 0.033 lbs/MMBTU gross heat input.

(12) Emission from the Unit 868 8H-101 Heater (CU-129) shall not exceed as follows: [25 PA Code 127.1, AMS Plan Approval 03054, dated 7/29/03]

(i) Carbon Monoxide emissions shall not exceed 400 ppmdv at 3% oxygen.

(13) The Permittee shall ensure that the heaters listed below do not exceed the following particulate, NOx emission, and SO2 limitations: [Case-by-case RACT, 25 Pa Code §§129.91-95, SO2 Operating Permit No. SO2-95-039, AMS Plan Approval 05124 dated Oct. 4, 2005]

Table D.3.a.1

	Particulate Limitation (lbs PM/MMBTU)	NOx Limitation (lbs NO_x/ MMBTU/)[a]	SO_2 Limitation[b] (lbs SO_2/MMBTU)	Rolling 365 Day Average Emission Rate[b] (lbs SO_2/MMBTU)
Source ID		**Gas**		
CU-004 GP	0.2[d]	0.177[a]	0.53	0.33
CU-005 GP	0.2[d]	---	0.53	0.33
CU-006 GP	0.2[d]	---	0.53	0.33
CU-007 GP	0.2[d]	---	0.53	0.33
CU-008 GP	0.2[d]	---	0.53	0.33
CU-009 GP	0.10[h]	0.04[h]	0.53	0.33
CU-012 GP	0.2[d]	---	0.53	0.33
CU-014 GP	0.2[d]	0.257[a]	0.53	0.33
CU-015 GP	0.1[d]	0.060[i]	0.53	0.53
CU-016 GP	0.2[d,j]	0.122[a,j]	0.53[j]	0.33[j]
CU-101 PB	0.19[c]	0.089[a]	0.53	0.33
CU-103 PB	0.1[d]	0.104[a]	0.53	0.33
CU-109 PB	0.2[d]	0.350[a]	0.53	0.33
CU-110 PB	0.2	0.163[a]	0.53	0.33
CU-111 PB	0.2[d]	0.270[a]	0.53	0.33
CU-112 PB	0.2[d]	0.163[a]	0.53	0.33
CU-113 PB	0.2[d]	---	0.53	0.33
CU-114 PB	0.2[d]	0.157[a]	0.53	0.33
CU-115 PB	0.2[d]	---	0.53	0.33
CU-118 PB	0.1[d]	0.167[a]	0.53	0.33
CU-123 PB	0.1[d]	---	0.53	0.33

CU-124 PB	0.1[d]	0.145[a]	0.53	0.33
CU-125 PB	0.1[d]	0.119[a]	0.53	0.33
CU-126 PB	0.1[d]	0.113[a]	0.53	0.33
CU-127 PB	0.1[d]	---	0.53	0.33
CU-128 PB	0.1[d]	---	0.53	0.33
CU-129 PB	0.1[d]	---	---	0.33
Quarterly NOx compliance not required for the following sources[n]				
CU-010 GP	0.17[g]	0.06[ag]	0.53	0.33
CU-011 GP	0.19[g]	0.06[ag]	0.53	0.33
CU-013 GP	0.12[c]	0.230[a]	0.53	0.33
CU-017 GP	0.00745[m]	0.035[m]	0.033[m]	0.33
CU-102 PB	0.10[d,k]	0.030[k]	0.53	0.33
CU-137 PB	0.1[d]	0.035[f]		
CU-138 PB	0.1[d]	0.035[f]	---	---
CU-139 PB (859 1H-1)	0.00745[l]	0.02[l]	0.033[l]	

[a] - Case-by-case RACT, 25 Pa Code §§129.91-95.

[b] - SO2 Operating Permit No. SO2-95-039. This streamlined permit condition assures compliance with 25 PA code 123.22.

[c] - Complies with 25 PA Code 123.11. This streamlined permit condition assures compliance with AMS Regulation II, Section V.

[d] - Complies with AMS Regulation II, Section V. This streamlined permit condition assures compliance with 25 PA Code 123.11.

[e] - Complies with Best Available Technology, 25 PA Code 127.1

[f] - AMS Plan Approval 02184 dated May 12, 2004

[g] - AMS Plan Approval 09040 dated February 1, 2010, the NOx emission are 365 rolling operating day basis, calculated daily. During these natural draft operating periods the maximum allowable NOx limitation will be 0.156 lb/MMBTU RACT Plan Approval (8/1/2000).

[h] - AMS Plan Approval 05124 dated October 4, 2005, Complies with AMS Regulation II, Section V. This streamlined permit condition assures compliance with 25 PA Code 123.11.

[i] - AMS Plan Approval 07163 dated February 5, 2008

[j] - AMS Plan Approval 06069 dated June 13, 2006

[k] - AMS Plan Approval 10180 dated February 3, 2011

[l] - AMS Plan Approval 06050 dated December 4, 2006. This streamlined permit condition assures compliance with AMS Regulation II, Section V and 25 PA Code 123.11

[m] - AMS Plan Approval 06144 dated January 29, 2008. This streamlined permit condition assures compliance with AMS Regulation II, Section V and 25 PA Code 123.11

[n] - NOx emission are based on the 30-day rolling average.

GP - Girard Point

PB - Point Breeze

(b) Work Practice Standards

(1) The Permittee shall perform an annual adjustment or tune-up for the specified sources listed in the Table D.3.b.1 below. This adjustment shall include, at a

minimum, the following: [Case-by-case RACT, 25 Pa Code §§129.91-95, Section 2E; 25 PA Code §129.93(b)(2) and (5)]

(i) Inspection, adjustment, cleaning or replacement of fuel-burning equipment, including the burners and moving parts necessary for proper operation as specified by the manufacturer.

(ii) Inspection of the flame pattern or characteristics and adjustments necessary to minimize total emissions of NOx, and to the extent practicable minimize emissions of CO.

(iii) Inspection of the air-to-fuel ratio control system and adjustments necessary to ensure proper calibration and operation as specified by the manufacturer.

(iv) For oil and gas and combination oil/gas fired units requiring an annual adjustment or tune-up on the combustion process, the Permittee shall make the annual adjustment in accordance with the EPA document "Combustion Efficiency Optimization Manual for Operators of Oil and Gas-fired Boilers," September 1983 (EPA-340/1-83-023) or equivalent procedures approved in writing by the AMS.

(2) The Permittee shall ensure that the specified fuel burning sources listed in Table D.3.b.1 shall be operated within the specifications in the table.

Table D.3.b.1

Source ID	Source shall have a Heat Input Cap of: (MMBTU/hr)	Source shall be maintained by the following:	Source shall be equipped with the following:
CU-004	70 [a]	Annual Tuneup or Adjustment [a]	Ultra Low NOx Burner
CU-005	45	Annual Tuneup or Adjustment [a]	
CU-006	49	Annual Tune-up or Adjustment [a]	
CU-007	48	Annual Tune-up or Adjustment [a]	
CU-009	60 [b]	Annual Tune-up or Adjustment [a]	Ultra Low Nox Burners [b] Fuel flow monitor [b]
CU-010	233 [a]	Annual Tune-up or Adjustment [a]	
CU-011	186 [a]	Annual Tuneup or Adjustment [a]	
CU-013	415 [a]	Annual Tune-up or Adjustment [a]	
CU-014	155 [a]	Annual Tune-up or Adjustment [a]	
CU-015	60	Annual Tune-up or Adjustment [a]	Ultra Low NOx Burner Fuel Flow Monitor
CU-016	91 [a]	Annual Tune-up or Adjustment [a]	

CU-017	260 k	Annual Tune-up or Adjustment [a]	Low NOx Burner
CU-101	183	Annual Tune-up or Adjustment [a]	
CU-102	242 [a]	Annual Tune-up or Adjustment [a]	
CU-103	235.4	Annual Tune-up or Adjustment [a]	
CU-109	69.78	Annual Tune-up or Adjustment [a]	
CU-110	174.67	Annual Tune-up or Adjustment [a]	
CU-111	99.44	Annual Tune-up or Adjustment [a]	
CU-112	155	Annual Tune-up or Adjustment [a]	
CU-114	59	Annual Tune-up or Adjustment [a]	
CU-115	49.6	Annual Tune-up or Adjustment [a]	
CU-118	80	Annual Tune-up or Adjustment [a]	
CU-123	45.5	Annual Tune-up or Adjustment [a]	
CU-124	74	Annual Tune-up or Adjustment [a]	
CU-125	85.1	Annual Tune-up or Adjustment [a]	
CU-126	72.2[g]	Annual Tune-up or Adjustment [a]	
CU-127	49.9	Annual Tune-up or Adjustment [a]	
CU-128	43	Annual Tune-up or Adjustment [a]	
CU-129	49.5 [c]	Annual Tune-up or Adjustment [a]	Low NOx Burner [d]
CU-137	97 [e,d]		Ultra Low NOx Burners with flue gas Recirculation [d,e]
CU-138	53 [e,d]		Ultra Low NOx Burners
CU-139	98		Ultra Low NOx Burners

[a] - Case-by-case RACT, 25 Pa Code §§129.91-95. Dated December 6, 2002

[b] - AMS Plan approval 05124 dated October 4, 2005
[c] - AMS Installation Permit 03054 dated July 29, 2003
[d] - 25 Pa Code §§127.1, 25 Pa Code §§127.12(a)(5) complies with Best Available Technology.
[e] - AMS Plan Approval 02184 dated May 12, 2004
[f] - AMS Plan Approval 09040 dated February 1, 2010
[g] - Case-by-case RACT, 25 Pa Code §§129.91-95, AMS Plan Approval 04237 dated August 12, 2005
[k] - AMS Plan Approval 06050 dated December 4, 2006

(3) The Permittee shall operate the SCR system while operating the 1332 H-400/401 (CU-010 & CU-011) heaters except during times required to replace SCR catalyst or to do maintenance to the SCR/air pre-heater system or to operate the heaters at low firing rate during reformer catalyst regenerations. [AMS Plan Approval 09040, dated 2/1/10]

(i) The Permittee shall take a daily NOx sample during these maintenance periods when it is necessary to by-pass the SCR/air pre-heater system and the NOx CEM, and the heaters are operated in natural draft mode. During these natural draft operating periods the maximum allowable NOx limitation will be 0.156 lb/MMBTU, as defined in the RACT Plan Approval (8/1/2000).

(ii) All emissions during the natural draft duration shall be counted toward the annual limitation in Section D.3(a)(4).

(4) Each process heater shall only burn refinery fuel gas or natural gas as listed in Table A-1.

(i) The Permittee shall not burn any fuel gas that contains hydrogen sulfide (H_2S) in excess of 230 mg/dscm (0.10 gr/dscf) [40 CFR 60.104 (a) (1)]

(5) During 1332 H-400/401 (CU-010 & CU-011) heater start-up the SCR system shall be brought into operation as soon as the flue gas temperature has stabilized in the range of 650 to 780 degrees Fahrenheit (F), the temperature range necessary to satisfy the catalyst system [AMS Plan Approval 09040, dated 2/1/10].

(6) The 868 8H-101 (CU-129) shall only fire refinery fuel gas and shall be equipped with low NOx burners. The firing rate shall not exceed 49.5 MMBTU/hr. [AMS Plan Approval 03054 dated 7/2/03]

(7) The fuel throughput of the 859 ULSD Hydrotreater shall be limited to 60,000 barrels per day calculated on a rolling 365 day average [AMS Plan Approval 06144, dated 1/29/08]

(8) The CU-010, CU-011, CU-013, CU-014, CU-017, and CJ-0102 heaters shall be equipped with continuous monitors and recorders for NOx and O_2. The continuous monitors and recorders shall meet the requirements of 25 PA Code Chapter 139. [Consent Decree Order 05-CV-2866]

(9) Beginning January 31, 2016, the Permittee shall conduct tune-up for each process heater to demonstrate compliance with 40 CFR 63 Subpart DDDDD

(i) Annual tune-up shall be conducted on each process heater that do not have continuous oxygen trim system [40 CFR 63 7540(a)(10)]

(ii) Tune-ups shall be conduction every 5 years on process heaters with continuous oxygen trim system. [40 CFR 63.7540(a)(12)]

(iii) Each tune-up shall include: [40 CFR 63.7540(a)(10)]

(A) As applicable, inspect the burner, and clean or replace any components of the burner as necessary (the Permittee may delay the burner inspection until the next scheduled unit shutdown). At units where entry into a piece of process equipment or into a storage vessel is required to complete the tune-up inspections, inspections are required only during planned entries into the storage vessel or process equipment;

(B) Inspect the flame pattern, as applicable, and adjust the burner as necessary to optimize the flame pattern. The adjustment should be consistent with the manufacturer's specifications, if available;

(C) Inspect the system controlling the air-to-fuel ratio, as applicable, and ensure that it is correctly calibrated and functioning properly (the Permittee may delay the inspection until the next scheduled unit shutdown).

(D) Optimize total emissions of CO. This optimization should be consistent with the manufacturer's specifications, if available, and with any NO_x requirement to which the unit is subject;

(E) Measure the concentrations in the effluent stream of CO in parts per million, by volume, and oxygen in volume percent, before and after the adjustments are made (measurements may be either on a dry or wet basis, as long as it is the same basis before and after the adjustments are made). Measurements may be taken using a portable CO analyzer;

(vi) The Permittee may delay the burner inspection for process heaters with continuous oxygen trim system specified in Section D.3(b)(9)(iii)(A) until the next scheduled or unscheduled unit shutdown, but you must inspect each burner at least once every 72 months. [40 CFR 63.7540(a)(12)]

(vii) If the unit is not operating on the required date for a tune-up, the tune-up must be conducted within 30 calendar days of startup. [40 CFR 63.7540(a)(13)]

(c) Testing Requirements

[25 PA Code §139]

(1) Compliance with the emission limits for the combustion sources listed in Section D.3(a)(13) -Table D.3.a.1shall be determined by quarterly stack sampling with a portable NOx analyzer. After one year of sampling, the Permittee may petition AMS for semiannual monitoring. AMS may, at any time, require three one-hour stack tests per fuel type for each unit where fuels can be fired separately. AMS may, at any time, require three one-hour stack tests for dual-fuel type combustion sources where both fuels must be fired at the same time and compliance with emission limits shall be through the use of one set of three one-hour stack tests. [Case-by-case RACT, 25 Pa Code §§129.91-95, Section 4C]

(2) The Permittee shall conduct performance test at the exhaust stack to establish emission factors and demonstrate compliance with NH3 emissions of the 1332 H400/401 (CU-010 & CU-011) heaters. NH3 emissions shall be determined using the average of 3 one-hour tests per the EPA Reference Method CTM 027. [AMS Plan Approval 09040, dated 2/1/10].

(i) Maximum ammonia injection shall be determined based on the performance test. To increase the ammonia injection rate, the Permittee must demonstrate via AMS-approved performance tests that the applicable emission limits can be achieved at the higher rate.

(ii) The NH3 performance test shall be conducted within 5 years of the last performance test.

(3) The Permittee shall conduct a CO performance test on the 1332 CRU H-2 (CU-009) heater on an annual basis in accordance with 40 CFR 63.7515.

(4) The Permittee shall submit a stack test protocol to Air Management Services (AMS) at least 30 days prior to the test date and the test results must be submitted to AMS within 60 days of testing. If at any time AMS has cause to believe that air contaminant emissions from this source is in excess of the limits specified in this permit, the Permittee shall be required to conduct whatever tests are deemed necessary by AMS to determine the actual emission rates.

(d) Monitoring Requirements

[25 PA Code §§127.511 & 139, §§114(a)(3) & 504(b) of Clean Air Act]

The Permittee shall monitor the following:

(1) The Permittee shall utilize an instrument for continuously monitoring and recording the concentration (dry basis) of H_2S in fuel gases before being burned in any fuel gas combustion device. [40 CFR 60.105(a)(4)]

(i) The span value for this instrument is 425 mg/dscm H_2S. 40 CFR

(ii) Fuel gas combustion devices having a common source of fuel gas may be monitored at only one location, if monitoring at this location accurately represents the concentration of H_2S in the fuel gas being burned.

(iii) The performance evaluations for the H_2S monitor shall use Performance Specification 7. Method 11 shall be used for conducting the relative accuracy evaluations.

(iv) H2S shall be monitored at following locations:

H2S CEMs location	SourceID	Source Name
GP Fuel Gas Mix Drum (V-10001)	CU-004	1232-B104
	CU-005	1332-H1
	CU-006	1332-H602
	CU-007	1332-H601
	CU-010	1332-H401
	CU-011	1332-H400
	CU-012	1332-H3

	CU-013	137-F1
	CU-014	137-F2
	CU-015	137-F3
	CU-016	231 B-101
	CU-017	433 H-1
	CU-018	3BH-37
	CU-020	3BH-39
	CU-021	3BH-40
PB Fuel gas Mix Drum (1V148)	CU-101	210 H-101
	CU102	210-H-201
	CU-103	210-13H1
	CU-109	860-2H2
	CU-110	860-2H3
	CU-111	860-2H4
	CU-112	860-2H5
	CU-114	860 2H-7
	CU-115	860 2H-8
	CU-118	864 PH-1
	CU-123	864-PH7
	CU-124	864-PH11
	CU-125	864-PH12
	CU-126	865-11H1
	CU-127	865-11H2
	CU-128	866-12H1
	CU-137	870 H-1
	CU-138	870 H-2
	CU-139	859 1H-1
H2S CEM at 1332 H2 Heater	CU-009	1332-H2
H2S CEM at 868 H-101 Heater	CU-129	868 8H-101

(2) The Permittee shall monitor the refinery fuel gas heating value and consumption daily, when the heater is in operation

(3) The Permittee shall install a parametric emissions monitoring system (PEMS) on the 868 8H 101 heater (CU-129) for Carbon Monoxide. The chosen parameters and software CEM shall accurately predict the emissions. Accuracy of the system shall be demonstrated during a stack test. The parameters and predicted emissions shall be monitored and recorded continuously to ensure compliance with the Carbon Monoxide emission limitation of 400ppmdv at 3% oxygen. [AMS Installation Permit. 03054 dated July 29, 2003]

(4) The Permittee shall install, operate, calibrate, and maintain an instrument for continuously monitoring and recording the concentration by volume (dry basis,

0 percent excess air) of NO_X emissions into the atmosphere, on the exit stack after the 1332 H-400/401 heaters (CU-010 & 011) SCR system. The monitor must include an O_2 monitor for correcting the data for excess air. The NOx and O2 CEMS must comply with PA CSMM Revision 7 and 25 PA Code Chapter 139. [AMS Plan Approval 09040, dated 2/1/10].

(5) For 1332 H-400/401 heaters (CU-010 & 011)

(i) The Permittee shall monitor for NOx, PM, NH3 emissions from the heaters. [AMS Plan Approval 09040, dated 2/1/10].

(ii) The Permittee shall daily monitor the fuel type and fuel usage of the heaters to ensure the capacity limits are not exceeded. [AMS Plan Approval 09040, dated 2/1/10].

(iii) The Permittee shall monitor and record ammonia injection of the heaters SCR system on an hourly basis to ensure compliance. [AMS Plan Approval 09040, dated 2/1/10].

(iv) The Permittee shall continuously monitor flue gas temperature at the inlet of the SCR to ensure good operating practice.. [AMS Plan Approval 09040, dated 2/1/10].

(6) The Permittee shall monitor NOx concentration of Unit 231 B 101 (CU-016) process heater using a portable NOx analyzer semi-annually [AMS Plan Approval 04140 dated 9/14/04, AMS Plan Approval 06069 dated 6/13/06]

(7) The Permittee shall monitor all fuel input and heating values to heaters to assure compliance with Section D.3(b)(2) on a daily basis to ensure capacity limits are not exceeded or install fuel limiting devices on the heaters to keep capacities below the allowable limits. [Case-by-case RACT, 25 Pa Code §§129.91-95]

(8) The fuel type and fuel usage for each process heater. [SO2 Operating Permit No. SO2-95-039]

(e) Recordkeeping Requirements

[25 PA Code §§127.511, 135.21, 135.5 & 139]

The Permittee shall keep the following records:

(1) Data or information required to determine compliance shall be recorded and maintained in a time frame consistent with the averaging period of the requirement. [Case-by-case RACT, 25 Pa Code §§129.91-95, Section 5C]

(2) For combustion units required to perform an annual adjustment or tune-up, the Permittee of the adjusted equipment shall record each adjustment procedure in a permanently bound log book or other method approved by the AMS. This log shall contain, at a minimum, the following information: [Case-by-case RACT, 25 Pa Code §§129.91-95, Section 5; 25 PA Code §129.93(b)(3)(I)-(v)]

(i) The date of the tuning procedure.

(ii) The name of the service company and technicians.

(iii) The final operating rate or load.

(iv) The final CO and NOx emission rates.

(v) The final excess oxygen rate.

(3) Records of periods of excess emissions shall be determined semiannually for all rolling 3-hour periods during which the average concentration of H_2S as measured by the H_2S continuous monitoring system exceeds 230 mg/dscm (0.10 gr/dscf). [40 CFR 60.105(e)(3)(ii)]

(4) The Permitee shall keep records of the following for each heater:

(i) Continuous Hydrogen Sulfide monitoring system records

(ii) Daily refinery gas consumptions, heating value, and sulfur content

(A) Heating value in MMBTU/hr shall be recorded hourly, calulated on a 24-hour (calendar day) average.

(iii) Stack test results

(iv) Continuous PEMS records for Carbon Monoxide for the 868 8H101 (CU1-129) heater.

(v) Maintenance records

(5) For 1332 H-400/401 heaters (CU-010 & 011)

(i) The Permittee shall keep records for NOx, PM, NH3 emissions from the heaters. [AMS Plan Approval 09040, dated 2/1/10].

(A) NOx emissions shall be determined daily based on CEM data. The NOx emission shall be converted to lbs/MMBTU at 0% O_2 using the equation below to ensure compliance.

Lb/MMBTU = (ppmdv)*(1.194×10^{-7})*(F-factor)*(20.9 / (20.9 - % O_2))
where the F factor = scf flue gas per MMBTU calculated daily from daily fuel gas samples.

(B) NH3 emissions shall be determined based on AMS approved stack data and the PM emissions shall be determined based on AP-42 emission factor or other AMS-approved emission factor.

(ii) The Permittee shall daily record the fuel type and fuel usage of the heater to ensure the capacity limits are not exceeded. [AMS Plan Approval 09040, dated 2/1/10].

(iii) The Permittee shall record ammonia injection of heater SCR system on an hourly basis to ensure compliance. [AMS Plan Approval 09040, dated 2/1/10].

(iv) The Permittee shall continuously record flue gas temperature at the inlet of the SCR to ensure good operating practice.. [AMS Plan Approval 09040, dated 2/1/10].

(6) The Permittee shall record the following for Unit 231 B 101 (CU-016): [AMS Plan Approval 04140 dated 9/13/04, AMS Plan Approval 06069 dated 6/13/08]

(i) SO2 emission shall be calculated using fuel sulfur content

(ii) PM, NOx, and CO shall be calculated using AP-42 emission factors or other AMS approved emission factors

(A) If at any time AMS has cause to believe that air containment emission is in excess of the limits specified, the Permittee shall be required to conduct whatever tests deemed necessary by AMS to determine the actual emission rate.

(7) Maintain on-site and submit, if requested by the Administrator, an annual report containing the following information to demonstrate compliance with 40 CFR 63 Subpart DDDDD [40 CFR 63.7540(a)(10)(vi)]

(iv) The concentrations of CO in the effluent stream in parts per million by volume, and oxygen in volume percent, measured at high fire or typical operating load, before and after the tune-up of the process heater;

(v) A description of any corrective actions taken as a part of the tune-up; and

(vi) The type and amount of fuel used over the 12 months prior to the tune-up, but only if the unit was physically and legally capable of using more than one type of fuel during that period. Units sharing a fuel meter may estimate the fuel used by each unit.

(f) Reporting Requirements

(1) The Permittee shall submit CEM and production reports to Air Management Services on a quarterly basis. CEM reports must meet the requirements of the PA CSMM.

(2) For 868 8H-101 (CU-129), written quarterly reports of excess emissions shall include the following information:

(i) The magnitude of excess emissions computed in accordance with 40 CFR 60.13(h), any conversion factor(s) used, and the date and time of commencement and completion of each time period of excess emissions. The process operating time during the reporting period. [40 CFR 60.7(c)(1)]

(ii) Specific identification of each period of excess emissions that occurs during startups, shutdowns, and malfunctions of the affected facility. The nature and cause of any malfunction (if known), the corrective action taken or preventative measures adopted. [40 CFR 60.7(c)(2)]

(iii) The date and time identifying each period during which the continuous monitoring system was inoperative except for zero and span checks and the nature of the system repairs or adjustments. [40 CFR 60.7(c)(3)]

(iv) When no excess emissions have occurred or the continuous monitoring system(s) have not been inoperative, repaired, or adjusted, such information shall be stated in the report. [40 CFR 60.7(c)(4)]

(v) The summary report form shall contain the information and be in the format shown in Figure 1 below unless otherwise specified by the AMS. One summary report form shall be submitted for each pollutant monitored at each affected facility. [40 CFR 60.7(d)]

(A) If the total duration of excess emissions for the reporting period is less than 1 percent of the total operating time for the reporting period and CMS downtime for the reporting period is less than 5 percent of the total operating time for the reporting period, only the summary report form shall be submitted and the excess emission report need not be submitted unless requested by the AMS. [40 CFR 60.7(d)(1)]

(B) If the total duration of excess emissions for the reporting period is 1 percent or greater of the total operating time for the reporting period or the total CMS downtime for the reporting period is 5 percent or greater of the total operating time for the reporting period, the summary report form

and the excess emission report shall both be submitted. [40 CFR 60.7(d)(2)]

FIGURE 1—SUMMARY REPORT— GASEOUS AND OPACITY EXCESS EMISSION AND MONITORING SYSTEM PERFORMANCE

Pollutant (Circle One—SO_2/NOx/ TRS/H_2S/CO/Opacity)
Reporting period dates:
From to:
Company:
Emission Limitation:
Address:
Monitor Manufacturer and Model No.:
Date of Latest CMS Certification or Audit:
Process Unit(s) Description:
Total source operating time in reporting period[1]:

Emission data summary[1]	CMS performance summary[1]
1.Duration of excess emissions in reporting period due to:	1. CMS downtime in reporting period due to:
a. Startup/shutdown	a. Monitor equipment malfunctions
b. Control equipment problems	b. Non-Monitor equipment malfunctions
c. Process problems	c. Quality assurance calibration
d. Other known causes	d. Other known causes
e. Unknown causes	e. Unknown causes
2. Total duration of excess emission	2. Total CMS Downtime
3. Total duration of excess emissions X (100) [Total source operating time] %[2]	3. [Total CMS Downtime] X (100) [Total source operating time] %[2]

[1] For opacity, record all times in minutes. For gases, record all times in hours.
[2] For the reporting period: If the total duration of excess emissions is 1 percent or greater of the total operating time or the total CMS downtime is 5 percent or greater of the total operating time, both the summary report form and the excess emission report described in 40 CFR 60.7(c) shall be submitted.

(C) On a separate page, describe any changes since last quarter in CMS, process or controls. I certify that the information contained in this report is true, accurate, and complete.

Name
Signature

Title
Date

(vi) All requests, reports, applications, submittals, and other communications to the Administrator pursuant to this part shall be submitted in duplicate to the Region III Office, and the AMS [40 CFR 60.4(a)(b)]:

(vii) The Permittee shall submit a signed statement certifying the accuracy and completeness of the information contained in the report. [40 CFR 60.107(f)]

(3) The Permittee shall report excess emission from the process heaters defined as follows: [40 CFR 60.105(e), AMS Plan Approval 09040, dated 2/1/10]

(i) All rolling 3-hour periods during which the average concentration of H_2S as measured by the H_2S continuous monitoring system 230 mg/dscm (0.10 gr/dscf).

(4) For each process heater, the Permittee shall submit the following:

(i) Submit all notifications required by 40 CFR 63.7545;

(ii) Submit semiannual compliance reports in accordance with 40 CFR 63.7550 and Table 9 of 40 CFR 63 Subpart DDDDD;

(iii) Submit immediate startup, shutdown, and malfunction reports in accordance with 40 CFR 63.10(d)(5) and Table 9 of 40 CFR 63 Subpart DDDDD.

(iv) Submit a signed statement in the Notification of Compliance Status report that indicates that the Permittee conducted a tune-up of the unit. [40 CFR 63.7530(d)]

(v) The Notification of Compliance Status shall include a signed certification that the energy assessment was completed according to 40 CFR 63 Subpart DDDDD Table and is an accurate depiction of your facility at the time of the assessment. [40 CFR 63.7530(e)]

4. Group 03 – Flare

Girard Point equipment numbered P-117, P-118, and P-119. Point Breeze equipment numbered P642, P643, and P646.

(a) Emission Limitations

(1) For each flare, emissions of sulfur oxides shall not exceed 0.05 percent by volume. [AMR III, Section II.B]

(2) Hydrogen Sulfide (H2S) content of the fuel gas burned in each flare shall not exceed 0.1 grains per dry standard cubic foot. [Consent Decree Order 05-CV-2866, 40 CFR 60.104.(a)(1), AMS Plan Approval 02184 dated 8/12/04]

(i) The combustion of gases generated by the Startup, Shutdown, or Malfunction of the refinery process unit or releases to flare as a result of relief valve leakage or other emergency malfunction are exempt from the above requirement.

(b) Work Practice Standards

(1) The flares shall be designed for and operated with no visible emissions as determined by the methods specified in Section D.4(c)(2)-(5), except for periods not to exceed a total of 5 minutes during any 2 consecutive hours. [40 CFR 63.11(b)(4) and 40 CFR 60.18(c)(1)]

(2) The flares shall be operated and maintained in conformance with their design. [40 CFR 60.18(d), 40 CFR 63.11(b)(1)]

(3) The flares shall be operated at all times when gases may be vented to them. [40 CFR 63.643(a)(1), 40 CFR 63.11(b)(3), 40 CFR 60.18(e)]

(4) The flares shall be operated with a pilot flame present at all times. The presence of a flare pilot flame shall be monitored using a thermocouple or any other equivalent device to detect the presence of a flame.[40 CFR 63.11(b)(5), 40 CFR 60.18(f)(2)]

(5) Flares shall be operated with a pilot flame present at all times, as determined by the methods specified in paragraphs D.4(c)(2)-(5). [40 CFR 60.18(c)(2)]

(6) The Permittee has the choice of adhering to either the heat content specifications in 40 CFR 60.18(c)(3)(ii) and the maximum tip velocity specifications in 40 CFR 60.18(c)(4), or adhering to the requirements in 40 CFR 60.18(c)(3)(i). [40 CFR 60.18(c)(3)]

(7) Steam-assisted flares shall be used only when the net heating value of the gas being combusted is 11.2 MJ/scm (300 Btu/scf) or greater. The net heating value of the gas being combusted shall be determined by the methods specified in 40 CFR 60.18(f)(3). [40 CFR 60.18(c)(3)(ii)]

(8) Steam-assisted and nonassisted flares shall be designed for and operated with an exit velocity, as determined by the methods specified in 40 CFR 60.18(f)(4), less than 18.3 m/sec (60 ft/sec), except as provided below: [40 CFR 60.18(c)(4)]

(i) Steam-assisted and nonassisted flares designed for and operated with an exit velocity, as determined by the methods specified in 40 CFR 60.18(f)(4), equal to or greater than 18.3 m/sec (60 ft/sec) but less than 122 m/sec (400 ft/sec) are allowed if the net heating value of the gas being combusted is greater than 37.3 MJ/scm (1,000 Btu/scf). [40 CFR 60.18(c)(4)(ii)]

(ii) Steam-assisted and nonassisted flares designed for and operated with an exit velocity, as determined by the methods specified in 40 CFR 60.18(f)(4), less than the velocity, Vmax, as determined by the method specified in 40 CFR 60.18(f)(5), and less than 122 m/sec (400 ft/sec) are allowed. [40 CFR 60.18(c)(4)(iii)]

(9) The Permittee shall investigate the cause of Hydrocarbon Flaring, Acid Gas Flaring and Tail Gas incidents, take reasonable steps to correct and minimize the conditions that have caused or contributed to Hydorcarbon Flaring, Acid Gas Flaring and Tail Gas incidents [Consent Decree Order 05-CV-2866]

(c) Testing Requirements

[25 PA Code §139]

(1) Test methods and procedures for SO_2 from combustion sources shall be equivalent to or modified to produce results equivalent to those which would be obtained by employing procedures specified in PADER Source Testing Manual. Details for sampling equipment are contained in either Appendix A of 40 CFR 60 or the PADER Source Testing Manual [25 PA Code §139.13(1)].

(2) Test Method 22 in Appendix A of 40 CFR 60 shall be used to determine the compliance of flares with the visible emission limitations. The observation

period is 2 hours and shall be used according to Method 22. [40 CFR 63.11(b)(4), 40 CFR 60.18(f)(1)]

(3) The net heating value of the gas being combusted in a flare shall be calculated using the following equation [40 CFR 60.18(f)(3)]:

$$H_T = K \sum_{i=1}^{n} C_i H_i$$

where:

H_T=Net heating value of the sample, MJ/scm; where the net enthalpy per mole of offgas is based on combustion at 25°C and 760 mm Hg, but the standard temperature for determining the volume corresponding to one mole is 20°C;

C_i=Concentration of sample component "i" in ppm on a wet basis, as measured for organics by Reference Method 18 and measured for hydrogen and carbon monoxide by ASTM D1946-77; and

H_i=Net heat of combustion of sample component i, kcal/g mole at 25°C and 760 mm Hg. The heats of combustion may be determined using ASTM D2382-76 if published values are not available or cannot be calculated.

(4) The actual exit velocity of a flare shall be determined by dividing the volumetric flowrate (in units of standard temperature and pressure), as determined by Reference Methods 2, 2A, 2C, or 2D as appropriate; by the unobstructed (free) cross sectional area of the flare tip. [40 CFR 60.18(f)(4)]

(5) The maximum permitted velocity, V_{max}, for flares complying with Section D.3(b)(9)(i) shall be determined by the following equation: [40 CFR 60.18(f)(5)]

$$\text{Log10}\ (V_{max}) = (HT+28.8)/31.7$$

where:

V_{max}=Maximum permitted velocity, M/sec

28.8=Constant

31.7=Constant

H_T=The net heating value as determined in 40 CFR 60.18 (f)(3).

(d) Monitoring Requirements

[25 PA Code §§127.511 & 139, §§114(a)(3) & 504(b) of Clean Air Act]

The Permittee shall monitor the following:

(1) The presence of a flare pilot flame shall be monitored using a thermocouple or any other equivalent device to detect the presence of a flame. [40 CFR 63.11(b)(5), 40 CFR 60.18(f)(2)]

(2) The Permittee shall monitor the fuel type and fuels usage and sulfur content of the fuel burned for each flare pilot on a daily basis. [SC2 Operating Permit]

(3) The Permittee shall monitor that the feed to the flares has not exceeded the worst case scenario used in the modeling demonstration. The Permittee shall

determine SO2 emissions using the same analysis and calculations used in the modeling demonstration. [SO2 Operating Permit]

(4) The Permittee shall monitor these control devices to ensure that they are operated and maintained in conformance with their designs. [40 CFR 60.18(d)]

(5) The flares 1231,1232, and 433 flares shall operate as a fuel gas combustion device, monitoring the fuel gases put into the flare header, with an alternative monitoring system (Alternative Monitoring Protocol for Flares – AMP for flares) as approved by EPA as seen in Section G and subsequent revisions approved by EPA. [Consent Decree Order 05-CV-2866]

(6) SO2 Emission Calculations for the Acid Gas (AG) Flaring [Consent Decree Order 05-CV-2866]

(i) The quantity of SO_2 emissions resulting from AG Flaring Incident shall be calculated by the following formula:

Tons of SO_2 = [FR] [TD] [ConcH_2S] [8.44×10^{-5}].

The quantity of SO_2 emitted shall be rounded to one decimal point. (Thus, for example, for a calculation that results in a number equal to 10.050 tons, the quantity of SO_2 emitted shall be rounded to 10.1 tons, and less than 10.050 shall be rounded to 10.0.) For purposes of determining the occurrence of, or the total quantity of SO_2 emissions resulting from, an AG Flaring Incident that is comprised of intermittent AG Flaring, the quantity of SO_2 emitted shall be equal to the sum of the quantities of SO_2 flared during each 24-hour period starting when the Acid Gas was first flared.

(ii) <u>The rate of SO_2 emissions</u> from AG Flaring Incident shall be expressed in terms of pounds per hour and shall be calculated by the following formula:

ER = [FR] [ConcH_2S] [0.169].

The emission rate shall be rounded to one decimal point. (Thus, for example, for a calculation that results in an emission rate of 19.95 pounds of SO_2 per hour, the emission rate shall be rounded to 20.0 pounds of SO_2 per hour; for a calculation that results in an emission rate of 20.05 pounds of SO_2 per hour, the emission rate shall be rounded to 20.1.)

where

ER = Emission Rate in pounds of SO_2 per hour

FR = Average Flow Rate to Flaring Device(s) during Flaring Incident in standard cubic feet per hour

TD = Total Duration of Flaring Incident in hours

ConcH_2S = Average Concentration of Hydrogen Sulfide in gas during Flaring Incident (or immediately prior to Flaring Incident if all gas is being flared) expressed as a volume fraction (scf H_2S/scf gas)

8.44×10^{-5} = [lb mole H_2S/379 scf H_2S][64 lbs SO_2/lb mole H_2S][Ton/2000 lbs]

0.169 = [lb mole H_2S/379 scf H_2S][1.0 lb mole SO_2/1 lb mole H_2S][64 lb SO_2/1.0 lb mole SO_2]

The flow of gas to the AG Flaring Device(s) ("FR") shall be as measured by the relevant flow meter or reliable flow estimation parameters. Hydrogen sulfide concentration ("ConcH_2S") shall be determined from the Sulfur Recovery Plant feed gas analyzer, from knowledge of the sulfur content of the process gas being flared, by direct measurement by tutwiler or draeger tube analysis or by any other method approved by EPA or the Appropriate Plaintiff/Intervenors. In the event that any of these data points is unavailable or inaccurate, the missing data point(s) shall be estimated according to best engineering judgment.

(7) EPA's determination for 1231/1232 Plant Flare system AMP [dated June 3, 2011]

(i) For the 455 car-seal closed connections, the Permittee shall monitor monthly to determine if these valves have been opened and are still intact. Valves that are found to have broken seals will be reported in the Permittee's semiannual flare report as required by the Consent Decree

(ii) For the 10 pressure control valves listed in Table 1 of AMP in Section G, the Permittee shall use material balances and engineering knowledge to determine whether 500 lbs or more of the SO2 in a 24 hour period has been released when a valve has opened due to malfunction. If this standard is exceeded, a hydrocarbon flaring incident has occurred and will be addressed as one in accordance with the Consent Decree

(iii) For the 7 connections listed in Table 2 of the AMP in Section G, the Permittee shall use approved CEMs to monitor and demonstrate compliance.

(iv) For the 11 connections listed in Table 2 of the AMP in Section G, the Permittee shall conduct a one-time sampling to estimated total SO2 emissions are under 100 lbs/day as allowed under Appendix H of the Consent Decree.

(8) EPA's determination for 433 Unit Plant Flare system AMP [dated June 3, 2011]

(i) For the 5 connections described in the Amp in Section G, the Permittee shall use approved CEMs to monitor and demonstrate compliance.

(ii) No further sampling is required for exempt streams and pressure relief valves.

(iii) The Permittee shall monitor monthly to verify that the seals of the car-sealed valves have not been opened and are intact. Valves that are found to have broken seals will be reported in the Permittee's semiannual flare report as required by the Consent Decree

(e) Recordkeeping Requirements

[25 PA Code §§127.511, 135.21, 135.5 & 139]

The Permittee shall keep the following records:

(1) For all flares, continuous records of presence of pilot flame.

(2) For all flares record the following:

(i) Fuel types, fuel usage, and sulfur analysis of the fuel burned in the pilots on a daily basis. [SO2 Operating Permit No. SO2-95-039]

(A) The sulfur content of the natural gas burnt in the flare pilot may be based on AP-42 factors for combustion sources.

(ii) Occurrences when the feed to the flare has exceeded the worst case analysis for SO2 in the modeling demonstration including the date, time, duration and calculated emissions of the exceedance. [SO2 Operating Permit No. SO2-95-039]

(iii) Date, time, duration, and calculated emissions of any exceedance per Section D.4(d)(3).

(3) SO2 emission for each Acid Gas or Tail Gas Flaring incident. Calculations shall be in accordances with Section D.4(d)(6) [Consent Decree Order 05-CV-2866]

(4) SO2 emission for each Hydrocarbon Flaring Incident. SO2 emission calculations for each Hydrocarbon flaring Incident shall use AG Flaring Incident formulas accordances with Section D.4(d)(6) [Consent Decree Order 05-CV-2866]

(f) Reporting Requirements

(1) Submit an excess emission and continuous monitoring system performance report and/or a summary report to the EPA Administrator and AMS semiannually stating when and how long the pilot flame was not present. [40 CFR 63.10(e)(3)]

(2) No later than 45 days following the end of an Acid Gas Flaring Incident occurring after Date of Entry, the Permittee shall submit to AMS and EPA a report with following: [Consent Decree Order 05-CV-2866]

(i) The date and time that the Acid Gas Flaring Incident started and ended. To the extent that the Acid Gas Flaring Incident involved multiple releases either within a 24-hour period or within subsequent, contiguous, non-overlapping 24-hour periods, the Permittee shall set forth the starting and ending dates and times of each release;

(ii) An estimate of the quantity of sulfur dioxide that was emitted and the calculations that were used to determine that quantity;

(ii) The steps, if any, that the Permittee took to limit the duration and/or quantity of sulfur dioxide emissions associated with the Acid Gas Flaring Incident;

(iii) A detailed analysis that sets forth the Root Cause and all significant contributing causes of that Acid Gas Flaring Incident, to the extent determinable;

(iv) An analysis of the measures, if any, that are available to reduce the likelihood of a recurrence of an Acid Gas Flaring Incident resulting from the same Root Cause or significant contributing causes in the future. If two or more reasonable alternatives exist to address the Root Cause, the analysis shall discuss the alternatives that are available, the probable effectiveness and cost of the alternatives, and whether or not an outside consultant should be retained to assist in the analysis. Possible design, operation and

maintenance changes shall be evaluated. If the Permittee concludes that corrective action(s) is (are) required the report shall include a description of the action(s) and, if not already completed, a schedule for its (their) implementation, including proposed commencement and completion dates. If the Permittee concludes that corrective action is not required, the report shall explain the basis for that conclusion;

(v) A statement that: (a) specifically identifies each of the grounds for stipulated penalties as specified in Paragraphs 56 and 57 of the Consent Decree and describes whether or not the Acid Gas Flaring Incident falls under any of those grounds;

(vi) To the extent that investigations of the causes and/or possible corrective actions still are underway on the due date of the report, a statement of the anticipated date by which a follow-up report fully conforming to the requirements of Paragraphs 53.d and 53.e of the Consent Decree shall be submitted; provided, however, that if the Permittee has not submitted a report or a series of reports containing the information required to be submitted within the 45-day time period set forth (or such additional time as EPA may allow) after the due date for the initial report for the Acid Gas Flaring Incident, the stipulated penalty provisions of Section XI of the Consent Decree shall apply, but the Permittee shall retain the right to dispute, under the dispute resolution provision of this Consent Decree, any demand for stipulated penalties that was issued as a result of Sunoco's failure to submit the report required under this Paragraph within the time frame set forth.

(vii) To the extent that completion of the implementation of corrective action(s), if any, is not finalized at the time of the submission of the report required under this Paragraph, then, by no later than 30 days after completion of the implementation of corrective action(s), the Permittee shall submit a report identifying the corrective action(s) taken and the dates of commencement and completion of implementation.

(3) For each Tail Gas Incident, the Permittee shall follow the same reporting requirements as the Acid Gas Flaring incident in Section D.4(f)(2) [Consent Decree Order 05-CV-2866]

(4) For each Hydrocarbon Flaring Incident, the Permittee shall follow the same reporting requirements as the Acid Gas Flaring incident in Section D.4(f)(2) and shall: [Consent Decree Order 05-CV-2866]

(i) Submit the Hydrocarbon Flaring Incident reports as part of the Semi-Annual Progess Reports in accordance with Section D.1(e)(6)

5. Group 04 - Loading Facilities and Control Equipment

Girard Point equipment numbered P129 and P183. Point Breeze equipment numbered P638 and CD-104 (LPG Flare).

(a) Emission Limitations

(1) The volatile organic compound emission from the operation of the LPG shall not exceed 24 tons per 12-month rolling period. [AMS Approval letter dated

February 7, 1995 for Permit 94105 & 94106 (Item 2). Potential VOC emissions are less than 24 tons per year and are mostly fugitives. Compliance with this requirement is assured by the LDAR program.]

(b) Work Practice Standards

(1) The flare shall be limited to burning natural gas or refinery fuel gas with a maximum concentration of 0.1 gr/dscf of hydrogen sulfide in the refinery fuel gas. [AMS Approval letter dated February 7, 1995 for Permit 94105 & 94106 (Item 3)]

(2) All bypass vent streams shall be equipped with flow indicators and recorders. As an alternative, the Permittee may secure the bypass line valve in the closed position with a car-seal or a lock-and-key type configuration. A visual inspection of the seal or closure mechanism shall be performed at least once every month to ensure that the valve is maintained in the closed position and the vent stream is not diverted through the bypass line. [AMS Approval letter dated February 7, 1995 for Permit 94105 & 94106 (Item 4), 40 CFR 63.645(c)]

(3) The Permittee shall utilize an LDAR program as described for Group 06, Section D.7.(a). [25 PA Code §129.58]

(4) The Permittee shall utilize a carbon adsorber at the benzene railcar unloading station to control benzene vapors from a manual vent on the nitrogen pressurization system. The adsorber should be operated by keeping the outlet below 20 ppm by volume benzene. In the event that the vent is activated, the outlet shall be monitored at the start and the end of the vent period with a portable chromatograph. If a portable chromatograph is not available, a drager tube may be used as a substitute. [AMS Approval letter dated April 20, 2000 for Plan Approval No. 00013]

(c) Testing Requirements

[25 PA Code §139]

(1) For determining the magnitude of VOC leaks, use EPA Method 21 as described for Group 06, Section D.7.(b).

(d) Monitoring Requirements

[25 PA Code §§127.511 & 139, §§114(a)(3) & 504(b) of Clean Air Act]

The Permittee shall monitor the following:

(1) For equipment leaks, utilize the same monitoring techniques and frequencies as used for Group 06, Section D.7.(c).

(2) The Permittee shall monitor and keep records of any emissions that bypass any control devices associated with the benzene unloading operation. [AMS Approval letter dated April 20, 2000 for Plan Approval No. 00013]

(3) Monthly product unloaded from benzene rail cars.

(e) Recordkeeping Requirements

[25 PA Code §§127.511, 135.21, 135.5 & 139]

The Permittee shall keep the following records:

(1) The Permittee shall retain a schematic diagram of the affected vent stream, collection system, fuel system, combustion devices and any bypass system

that is associated with the LPG on site. [AMS Approval letter dated February 7, 1995 for Permit 94105 & 94106 (Item 4)]

(2) Maintain a monitoring log similar to that shown for Group 06, Section D.7.(c)(5).

(3) Records of any emissions that bypass any control devices associated with the benzene unloading operation. [AMS Approval letter dated April 20, 2000 for Plan Approval No. 00013]

(4) Monthly product unloaded from benzene railcars.

(5) For each Group 2 transfer rack, the Permittee shall maintain records in 40 CFR 63.130(f). No other provisions for transfer racks apply to the Group 2 transfer rack. [40 CFR 63.126(c)]

(i) The Permittee of a Group 1 or Group 2 transfer rack shall record, update annually, and maintain the information specified in 40 CFR 63.130(f)(1) – (3) in a readily accessible location on site: [40 CFR 63.130(f)]

(A) An analysis demonstrating the design and actual annual throughput of the transfer rack; [40 CFR 63.130(f)(1)]

(B) An analysis documenting the weight-percent organic HAP's in the liquid loaded. Examples of acceptable documentation include but are not limited to analyses of the material and engineering calculations. [40 CFR 63.130(f)(2)]

(C) An analysis documenting the annual rack weighted average HAP partial pressure of the transfer rack. [40 CFR 63.130(f)(3)]

(1) For Group 2 transfer racks that are limited to transfer of organic HAP's with partial pressure less than 10.3 kilopascals, documentation is required of the organic HAP's (by compound) that are transferred. The rack weighted average partial pressure does not need to be calculated. [40 CFR 63.130(f)(3)(i)]

(2) For racks transferring one or more organic HAP's with partial pressures greater than 10.3 kilopascals, as well as one or more organic HAP's with partial pressures less than 10.3 kilopascals, a rack weighted partial pressure shall be documented. The rack weighted average HAP partial pressure shall be weighted by the annual throughput of each chemical transferred. [40 CFR 63.130(f)(3)(ii)]

(f) Reporting Requirements

(1) Submit quarterly reports as described for Group 06, Section D.7.(d).

6. Group 05 – Sulfur recovery units

Point Breeze equipment numbered P659, P660, CD108 (Amine Tail Gas Scrubber), CD109 (Tail Gas Incinerator – TGU-1), and CD114 (Tail Gas Incinerator – TGU-2)

(a) Emission Limitations

(1) Emissions of SO_2 shall not exceed a concentration of 250 ppm SO_2 by volume on a dry basis at zero percent excess air on a rolling 12-hour average. [40 CFR § 60.104(a)(2)(i), Installation Permit No. 90006 and AMS Permit Approval Condition Letter dated 1/31/91 for P659, AMS Plan Approval 01162 dated

10/8/02, AMS Plan Approval 04322, dated 2/28/06 and AMS Plan Approval 06144, dated 1/29/08]

(2) The combined SO_2 emission rate from P659 and P660 shall not exceed 31.72 lbs/hr. [SO2 Operating Permit No. SO2-95-039. This streamlined permit condition assures compliance with 25 PA Code §129.13, AMS Plan Approval 04322, dated 2/28/06, and Plan Approval 06144, dated 1/29/08]

(3) When operating only one Claus unit (P659 or P660), the SO_2 emission rate from Sulfur Recovery units, shall not exceed 15.36 lbs/hr or 67 tons per rolling 12-month period. [Installation Permit No. 90006 and AMS Permit Approval Condition Letter dated 1/31/91, AMS Plan Approval 01162 dated 10/8/02]

(b) Work Practice

(1) The 867 SRU combined (North and South) sulfur production rate shall be limited to 80 Long ton per day averaged over a rolling 12-month period [Plan Approval 06144, issued 1/29/08].

(c) Testing Requirements

[25 PA Code §139]

(1) The performance evaluations for the SO_2 monitor shall use Performance Specification 2. Methods 6C and 3A, in accordance with 40 CFR 60.106(f)(1) and 40 CFR 60.106(f)(3) respectively, shall be used for conducting the relative accuracy evaluations. [40 CFR 60.105(a)(5)(ii), 40 CFR 60.106(f)(1) and 40 CFR 60.106(f)(3)]

(2) The Permittee shall conduct CEMS performance evaluations at such times as may be required by the EPA Administrator and AMS under section 114 of the Act. The frequency shall be in accordance with 25 Pa Code §139 and the "Source Testing Manual." [40 CFR 60.13(c), 25 Pa Code §139]

(d) Monitoring Requirements

[25 PA Code §§127.511 & 139, §§114(a)(3) & 504(b) of Clean Air Act]

The Permittee shall monitor the following:

(1) The Permittee shall demonstrate compliance with the SO2 emission limitations through the use of Continuous Emission Monitors (CEM) in accordance with 40 CFR Part 60, Subpart J and Appendix B, 40 CFR Part 63, Subpart UUU and 25 PA Code Chapter 139. .[Plan Approval 04322, dated 2/28/06 and Plan Approval 06144, dated 1/29/08]

(2) Continuously monitor and record the concentration (dry basis, zero percent excess air) of SO_2 emissions into the atmosphere. The monitor shall include an oxygen monitor for correcting the data for excess air. [40 CFR 60.105(a)(5)]

(i) The span values for CD-109 (TGU-1) monitor is 500 ppm SO_2 and 12.5 percent O_2. [Installation Permit No. 90006 and AMS Permit Approval Condition Letter dated 1/31/91 for P659]

(ii) The span values for CD-110 (TGU-2) monitor is 500 ppm SO2 and 25 percent O2. [40 CFR 60.105(a)(5), Plan Approval 06144 dated 1/29/08].

(3) The Permittee shall record the SRU sulfur recovery rate daily for each unit and averaged over a rolling 12-month period on a monthly basis for the combined

units [SO2 Operating Permit No. SO2-95-039, AMS Plan Approval 04322, dated 2/28/06, and Plan Approval 06144, dated 1/29/08]

(4) SO2 Emission Calculations for the Tail Gas Incidents. [Consent Decree Order 05-CV-2866]

(i) For Tail Gas Incidents, the Permittee shall follow the same investigative, reporting, corrective action and assessment of stipulated penalty procedures as those set forth in Acid Gas Flaring Incidents. Those procedures shall be applied to TGU shutdowns, bypasses of a TGU, or other events which result in a Tail Gas Incident, including unscheduled shutdowns of a Claus Sulfur Recovery Plant. Notwithstanding the foregoing, stipulated penalties shall not apply to emissions resulting from the scheduled Start-up or Shutdown of a Sulfur Recovery Plant.

(ii) The quantity of SO_2 emissions resulting from a Tail Gas Incident shall be calculated by one of the following methods, based on the type of event:

(A) If Tail Gas is combusted in a flare, the SO_2 emissions are calculated using the methods outlined in Section D.4.(c)(6); or

(B) If Tail Gas exceeding the 250 ppmvd (NSPS J limit) is emitted from a monitored SRP incinerator, then the following formula applies:

$$ER_{TGI} = \sum_{i=1}^{TD_{TGI}} [FR_{Inc.}]_i [\text{Conc. } SO_2 - 250]_i [0.169 \times 10^{-6}] [(20.9 - \%\ O_2)/20.9]_i$$

where:

ER_{TGI} = Emissions in excess of the 250 ppm limit from the Tail Gas Unit at the SRP incinerator, pounds of SO_2 over a 24-hour period

TD_{TGI} = Hours when the incinerator CEM was exceeding 250 ppmvd SO_2 on a rolling twelve hour average, corrected to 0% O2, in each 24-hour period of the Incident

i = Each hour within TD_{TGI}

$FR_{Inc.}$ = Incinerator Exhaust Gas Flow Rate (standard cubic feet per hour, dry basis) (actual stack monitor data or engineering estimate based on the acid gas feed rate to the SRP) for each hour of the Incident

Conc. SO_2 = The average SO_2 concentration (CEMS data) that is greater than 250 ppm in the incinerator exhaust gas, ppmvd corrected to 0% O_2, for each hour of the Incident

% O_2 = O_2 concentration (CEMS data) in the incinerator exhaust gas in volume % on dry basis for each hour of the Incident

0.169×10^{-6} = [lb mole of SO_2 / 379 SO_2] [64 lbs SO_2 / lb mole SO_2] [1×10^{-6}]

Standard conditions = 60 degree F; 14.7 lb_{force}/sq.in. absolute

In the event the concentration SO_2 data point is inaccurate or not available or a flow meter for FR_{Inc}, does not exist or is inoperable, then the Permittee shall estimate emissions based on best engineering judgment.

(e) Recordkeeping Requirements

[25 PA Code §§127.511, 135.21, 135.5 & 139]

The Permittee shall keep the following records:

(1) Record periods of excess emissions when all 12-hour periods during which the average concentration of SO_2 as measured by the SO_2 continuous monitoring system under Section D.6(c)(2) exceeds 250 ppm (dry basis, zero percent excess air). [40 CFR 60.105(e)(4)(i)]

NOTE: All averages shall be determined as the arithmetic average of the applicable 1-hour averages, e.g., the rolling 12-hour average shall be determined as the arithmetic average of 12 contiguous 1-hour averages.

(2) Source shall be periodically observed for process and log data, strip chart, or electronic monitoring media. [SO2 Operating Permit No. SO2-95-039]

(3) The Permittee shall keep continuous emission records. [SO2 Operating Permit No. SO2-95-039, 25 PA Code §139.101(5)]

(4) The Permittee shall record the SRU sulfur recovery rate daily for each unit and averaged over a rolling 12-month period on a monthly basis for the combined units [SO2 Operating Permit No. SO2-95-039, AMS Plan Approval 04322, dated 2/28/06, and Plan Approval 06144, dated 1/29/08]

(5) The Permittee shall record SRU rolling 12-month SO2 emissions on a monthly basis to ensure compliance with Section D.6(a)(2) & (3). Emissions may be allocated based on total SRU emission and North SRU and South SRU sulfur recovery rate.

(6) SO2 emission for each Tail Gas Flaring incident. Calculations shall be in accordances with Section D.6(d)(4) [Consent Decree Order 05-CV-2866]

(f) Reporting Requirements

(1) Report periods of excess emissions when all 12-hour periods during which the average concentration of SO_2 as measured by the SO_2 continuous monitoring system under Section D.6(c)(2) exceeds 250 ppm (dry basis, zero percent excess air). [40 CFR 60.105(e)(4)(i)]

(2) Submit excess emissions and monitoring systems performance report and-or summary report form to the AMS semiannually. More frequent reporting may be required by the AMS. All reports shall be postmarked by the 30th day following the end of each six-month period. [40 CFR 60.7(c)]

7. Group 06 – Refinery VOC, SOCMI VOC, & Existing Refinery MACT, NSPS, or NESHAP HAP Components Subject to 40 CFR 60 Subpart VV

[40 CFR 60.480, 60.590 & 63.648; PA129.58; AMR V Section XIII A. and E., 40 CFR 61 Subpart J]

The following Summary Table is a summary of leak detection and repair regulatory applicability for individual components within each process unit of the refinery:

Summary Table

Regulatory Level:	Federal				Local		Consent Decree
Program Descriptor:	40CFR60 Sub VV Applicbty & Method	40CFR60 Sub GGG Applicbty (VV Mthd)	40CFR63 Sub CC (Electing 40CFR60 Sub VV Method)	40CFR63 Sub H Applicbty & Method	PA 129.58 VOC	PA 129.71 SOCMI VOC	
Applicability & Source Definition Ref.:	60.480(a)	60.590(a)	63.640(a) 63.648(a)	63.100 63.160(a)	121.1 129.58	121.1 129.71	
Source Definition Summary:	VOC comp's. in SOCMI units per 60.489	compressor & group of all equip. within a process unit	all OHAP components in unit unless noted for VOC coverage	all OHAP components in facility CMPU's unless noted for VOC coverage	VOC comp's. in the unit not monitored per NSPS or NESHAP or Pa SOCMI	VOC comp's. in SOCMI units per 60.489 not MON. per NSPS, NESHAP or Pa VOC	
POINT BREEZE PROCESSING AREA:							
210a/b Crude, A/C Vacuum			x		x		x
864 Unifiner			x		x		x
865 Distillate HDS		x			x		x
866 Heavy Oil HDS			x		x		x
868 FCC		x(use MACT)	x		x		x
869 Alkylation HPN & DIB		x(use MACT)	x		x		x
860 Unifiner / Reformer			x		x		x
862 Light Ends			x		x		x
8832 (aka Sludge Incinerator includes GP Waste Water Treatment Plant)					x		x
867 SRU,with SWS, Claus, MDEA/DEA, Incin.			x (DEA)		x		x
867 (includes Bio Plant and PB WWTP)			x		x		x
870(LSG)			x		x		x
859 ULSD		x(GGGa)			x		x
~~Inter-Refy. Pipeline Eqpt. (Mar. Hook)~~		~~x, for 40/61/J~~					
Girard Point Wharf including Marine Vapor Recovery System		x			x		x
Fuel Gas System (GP & PB)		x			x		x
GIRARD POINT PROCESSING AREA:							
137 Crude/Vacuum			x		x		x
1332 Hydrobon			x(+VOC)		x		x
1332 Reformer			x(+VOC)		x		x
231 Distillate HDS			x		x		x
1232 FCC			x		x	x, use MACT	x
1232 CO Boiler					x		x
# 2 Treater					x		
431 C4 & C3 Distillation			x		x	x, use MACT	x
C3/C4 Compressor @ 1332		x			x		x
331 Isomerization		x			x		x
					*		
433 Alkylation (HF)		x (use MACT)	x		x		x
1732 Benzene Recovery	x, use HON			x (+VOC)		x, use HON	x
1733 Cumene Production	x, use HON			x (+VOC)		x, use HON	x
# 3 Boilerhouse					x		x
8733 Sour Water Stripper					x		
531			x		x		x
532 Amine Absorber			x(DEA)				x
Butane Line (between PB & GP)		x			x		x

North Tank Field (NTF)			x		x		x
North Yard Oil Moveement (NYOM) - #3 Farm					x		x
NYOM Propane Terminal (subarea of NYOM)		x			x		x
NYOM Inter Refinery Pipeline (subarea of NYOM)		x			x		x
Schuylkill River Tank Farm					x		x (not required)
South Tank Field (except Scalehouse area)					x		x
Scalehouse (subarea of STF)				x		x	x
South Yard Oil Movement (SYOM) - #1, #4, Farms subareas			x		x		x
SYOM #5 Farm (subarea of SYOM)					x		x
SYOM #2 Farm (subarea of SYOM)			x		x		x
SYOM #2 Farm HON (subarea of SYOM)				x		x	x
SYOM Inter Refinery Pipeline (subarea of SYOM)		x			x		x

(a) Work Practice Standards

(1) PUMPS IN LIGHT LIQUID SERVICE.

(i) Each pump in light liquid service shall be monitored monthly to detect leaks by the methods specified in 40 CFR 60.485(b), except as provided in 40 CFR 60.482-1(c) and 40 CFR 60.482-2(d), 40 CFR 60.482-2(e), and 40 CFR 60.482-2(f). [40 CFR 60.482-2(a)(1)]

(ii) Each pump in light liquid service shall be checked by visual inspection each calendar week for indications of liquids dripping from the pump seal. [40 CFR 60.482-2(a)(2)]

(iii) If an instrument reading of 10,000 ppm or greater is measured, a leak is detected. [40 CFR 60.482-2(b)(1)]

(A) If there are indications of liquids dripping from the pump seal, a leak is detected.

(B) If there are indications of liquids dripping from the pump seal, the Permittee shall follow the procedure specified below in Section D.7.(a)(1)(v)(A) & (B). This requirement does not apply to a pump that was monitored after a previous weekly inspection if the instrument reading for that monitoring event was less than 10,000 ppm and the pump was not repaired since that monitoring event.

(1) Monitor the pump within 5 days as specified in 40 CFR §60.485(b). If an instrument reading of 10,000 ppm or greater is measured, a leak is detected. The leak shall be repaired using the procedures as follows:

(i) A first attempt at repair shall be made no later than 5 calendar days after each leak is detected. First attempts at repair include, but are not limited to, the practices described below, where practicable.

- Tightening the packing gland nuts;
- Ensuring that the seal flush is operating at design pressure and temperature.

(2) Designate the visual indications of liquids dripping as a leak, and repair the leak within 15 days of detection by eliminating the visual indications of liquids dripping.

(iv) LEAKING PUMPS.

(A) When a leak is detected, it shall be repaired as soon as practicable, but not later than 15 calendar days after it is detected, except as provided in 40 CFR 60.482-9. [40 CFR 60.482-2(c)(1)]

(B) A first attempt at repair shall be made no later than 5 calendar days after each leak is detected. [40 CFR 60.482-2(c)(2)]

(v) Each pump equipped with a dual mechanical seal system that includes a barrier fluid system is exempt from the requirements of 40 CFR 60.482-2(a), Provided the following requirements are met:

(A) Each dual mechanical seal system is-

(1) Operated with the barrier fluid at a pressure that s at all times greater than the pump stuffing box pressure; or [40 CFR 60.482-2(d)(1)(i)]

(2) Equipment with a barrier fluid degassing reservoir that is connected by a closed vent system to a control device that complies with the requirements of 40 CFR 60.482-10; or [40 CFR 60.482-2(d)(1)(ii)]

(3) Equipped with a system that purges the barrier fluid into a process stream with zero VOC emissions to the atmosphere. [40 CFR 60.482-2(d)(1)(iii)]

(B) The barrier fluid system is in heavy liquid service or is not in VOC service. [40 CFR 60.482-2(d)(2)]

(C) Each barrier fluid system is equipped with a sensor that will detect failure of the seal system, the barrier fluid system, or both. [40 CFR 60.482-2(d)(3)]

(D) Each pump is checked by visual inspection, each calendar week, for indications of liquids dripping from the pump seals. [40 CFR 60.482-2(d)(4)]

(E) Each sensor as described in 40 CFR 60.482-2(d)(3) is checked daily or is equipped with an audible alarm, and [40 CFR 60.482-2(d)(5)(i)]

(F) The Permittee determines, based on design considerations and operating experience, a criterion that indicates failure of the seal system, the barrier fluid system, or both. [40 CFR 60.482-2(d)(5)(ii)]

(G) LIQUID LEAKS FROM PUMPS IN LIGHT LIQUID SERVICE.

(1) If there are indications of liquids dripping from the pump seal or the sensor indicates failure of the seal system, the barrier fluid system, or both based on the criterion determined in 40 CFR 60.482-2(d)(5)(ii), a leak is detected. [40 CFR 60.482-2(d)(6)(i)]

(2) When a leak is detected, it shall be repaired as soon as practicable, but not later than 15 calendar days after it is detected, except as provided in 40 CFR 60.482-9. [40 CFR 60.482-2(d)(6)(ii)]

(3) A first attempt at repair shall be made no later than 5 calendar days after each leak is detected. [40 CFR 60.482-2(d)(6)(iii)]

(vi) Any pump that is designated, as described in 40 CFR 60.486(e)(1) and (2), for no detectable emission, as indicated by an instrument reading of less than 500 ppm above background, is exempt from the requirements of 40

CFR 60.482-2(a), 40 CFR 60.482-2(c), and 40 CFR 60.482-2(d) if the pump:

(A) Has no externally actuated shaft penetrating the pump housing [40 CFR 60.482-2(e)(1)],

(B) Is demonstrated to be operating with no detectable emissions as indicated by an instrument reading of less than 500 ppm above background as measured by the methods specified in 40 CFR 60.485(c), and. [40 CFR 60.482-2(e)(2)]

(C) Is tested for compliance with 40 CFR 60.482-2(e)(2) initially upon designation, annually, and at other times requested by the EPA Administrator and AMS. [40 CFR 60.482-2(e)(3)]

(vii) If any pump is equipped with a closed vent system capable of capturing and transporting any leakage from the seal or seals to a control device that complies with the requirements of 40 CFR 60.482-10, it is exempt from 40 CFR 60.482-2(a) through 40 CFR 60.482-2(e). [40 CFR 60.482-2(f)]

(2) COMPRESSORS. Each compressor shall be equipped with a seal system that includes a barrier fluid system and that prevents leakage of VOC to the atmosphere, except as provided in 40 CFR 60.482-1(c) and 40 CFR 60.482-3 (h) and 40 CFR 60.482-3(i). [40 CFR 60.482-3(a)]

(i) Each compressor seal system as required in 40 CFR 60.482-3(a) shall be:

(A) Operated with the barrier fluid at a pressure that is greater than the compressor stuffing box pressure; or [40 CFR 60.482-3(b)(1)]

(B) Equipped with a barrier fluid system that is connected by a closed vent system to a control device that complies with the requirements of 40 CFR 60.482-10; or [40 CFR 60.482-3(b)(2)]

(C) Equipped with a system that purges the barrier fluid into a process stream with zero VOC emissions to the atmosphere. [40 CFR 60.482-3(b)(3)]

(ii) The barrier fluid system shall be in heavy liquid service or shall not be in VOC service. [40 CFR 60.482-3(c)]

(iii) Each barrier fluid system as described in 40 CFR 60.482-3(a) shall be equipped with a sensor that will detect failure of the seal system, barrier fluid system, or both. [40 CFR 60.482-3(d)]

(iv) Each sensor as required in 40 CFR 60.482-3(d) shall be checked daily or shall be equipped with an audible alarm. [40 CFR 60.482-3(e)(1)]

(v) The Permittee shall determine, based on design considerations and operating experience, a criterion that indicates failure of the seal system, the barrier fluid system, or both. [40 CFR 60.482-3(e)(2)]

(vi) If the sensor indicates failure of the seal system, the barrier system, or both based on the criterion determined under 40 CFR 60.482-3(e)(2), a leak is detected. [40 CFR 60.482-3(f)]

(vii) When a leak is detected, it shall be repaired as soon as practicable, but not later than 15 calendar days after it is detected, except as provided in 40 CFR 60.482-9. [40 CFR 60.482-3(g)]

(viii) A first attempt at repair shall be made no later than 5 calendar days after each leak is detected. [40 CFR 60.482-3(g)(2)]

(ix) A compressor is exempt from the requirements of 40 CFR 60.482-3(a) and 40 CFR 60.482-3(b), if it is equipped with a closed vent system capable of capturing and transporting any leakage from the seal to a control device that complies with the requirements of 40 CFR 60.482-10, except as provided in 40 CFR 60.482-3(i). [40 CFR 60.482-3(h)]

(x) Any compressor that is designated, as described in 40 CFR 60.486(e)(1) and (2), for no detectable emissions, as indicated by an instrument reading of less than 500 ppm above background, is exempt from the requirements of 40 CFR 60.482-3(a)-(h) if the compressor:

(A) Is demonstrated to be operating with no detectable emissions, as indicated by an instrument reading of less than 500 ppm above background, as measured by the methods specified in 40 CFR 60.485(c); and [40 CFR 60.482-3(i)(1)]

(B) Is tested for compliance with 40 CFR 60.482-3(i)(1) initially upon designation, annually, and at other times requested by the EPA Administrator and AMS. [40 CFR 60.482-3(i)(2)]

(3) PRESSURE RELIEF DEVICES IN GAS/VAPOR SERVICE.

(i) Except during pressure releases, each pressure relief device in gas/vapor service shall be operated with no detectable emissions, as indicated by an instrument reading of less than 500 ppm above background, as determined by the methods specified in 40 CFR 60.485(c). [40 CFR 60.482-5(a)]

(ii) After each pressure release, the pressure relief device shall be returned to a condition of no detectable emissions, as indicated by an instrument reading of less than 500 ppm above background, as soon as practicable, but no later than 5 calendar days after the pressure release, except as provided in 40 CFR 60.482-9. [40 CFR 60.482-4(b)(1)].

(iii) No later than 5 calendar days after the pressure release, the pressure relief device shall be monitored to confirm the conditions of no detectable emissions, as indicated by an instrument reading of less than 500 ppm above background, by the methods specified in 40 CFR 60.485(c). [40 CFR 60.482-4(b)(2)]

(iv) Any pressure relief device that is equipped with a closed vent system capable of capturing and transporting leakage through the pressure relief device to a control device as described in 40 CFR 60.482-10 is exempted from the requirements of 40 CFR 60.482-4(a) and 40 CFR 60.482-4(b). [40 CFR 60.482-4(c)]

(4) SAMPLING CONNECTION SYSTEMS.

(i) Each sampling connection system shall be equipped with a closed-purged, closed-loop, or closed-vent system, except as provided in 40 CFR 60.482-1(c). [40 CFR 60.482-5(a)]

(ii) Each closed-purge, closed-loop, or closed-vent as required in 40 CFR 60.482-5(a) shall comply with the requirements specified in 40 CFR 60.482-5(b)(1) through 40 CFR 60.482-5(b)(4). [40 CFR 60.482-5(b)]

(A) Return the purged process fluid directly to the process line; or [40 CFR 60.482-5(b)(4)]

(B) Collect and recycle the purged process fluid to a process; or [40 CFR 60.482-5(b)(4)]

(C) Be designed and operated to capture and transport all the purged process fluid to a control device that complies with the requirements of 40 CFR 60.482-10. [40 CFR 60.482-5(b)(4)]

(iii) In situ sampling systems and sampling systems without purges are exempt from the requirements of 40 CFR 60.482-5(a) and 40 CFR 60.482-5(b). [40 CFR 60.482-5(c)]

(5) OPEN-ENDED VALVES OR LINES.

(i) Each open-ended valve or line shall be equipped with a cap, blind flange, plug, or a second valve, except as provided in 40 CFR 60.482-1(c). [40 CFR 60.482-6(a)(1)]

(ii) The cap, blind flange, plug, or second valve shall seal the open end at all times except during operations requiring process fluid flow through the open-ended valve or line. [40 CFR 60.482-6(a)(2)]

(iii) Each open-ended valve or line equipped with a second valve shall be operated in a manner such that the valve on the process fluid end is closed before the second valve is closed. [40 CFR 60.482-6(b)]

(iv) When a double block-and-bleed system is being used, the bleed valve or line may remain open during operations that require venting the line between the block valves but shall comply with 40 CFR 60.482-6(a) at all other times. [40 CFR 60.482-6(c)]

(6) VALVES IN GAS-VAPOR SERVICE AND LIGHT LIQUID SERVICE. Each valve shall be monitored monthly to detect leaks by the methods specified in 40 CFR 60.485(b) and shall comply with 40 CFR 60.482-7(b) through 40 CFR 60.482-7(e), except as provided in 40 CFR 60.482-7(f), (g), and (h), 40 CFR 60.483-1,2, and 40 CFR 60.482-1(c). [40 CFR 60.482-7(a)]

(i) If an instrument reading of 10,000 ppm or greater is measured, a leak is detected. [40 CFR 60.482-7(b)]

(ii) Any valve for which a leak is not detected for 2 successive months may be monitored the first month of every quarter, beginning with the next quarter, until a leak is detected. [40 CFR 60.482-7(c)(1)]

(iii) If a leak is detected, the valve shall be monitored monthly until a leak is not detected for 2 successive months. [40 CFR 60.482-7(c)(2)]

(iv) When a leak is detected, it shall be repaired as soon as practicable, but no later than 15 calendar days after the leak is detected, except as provided in 40 CFR 60.482-9. [40 CFR 60.482-7(d)(1)]

(v) A first attempt at repair shall be made no later than 5 calendar days after each leak is detected. [40 CFR 60.482-7(d)(2)]

(vi) First attempts at repair include, but are not limited to, the following best practices where practicable: tightening of bonnet bolts; replacement of

bonnet bolts; tightening of packing gland nuts; and injection of lubricant into lubricated packing. [40 CFR 60.482-7(e)]

(vii) Any valve that is designated, as described in 40 CFR 60.486(e)(2), for no detectable emissions, as indicated by an instrument reading of less than 500 ppm above background, is exempt from the requirements of 40 CFR 60.482-7(a) if the valve:

(A) Has no external actuating mechanism in contact with the process fluid, [40 CFR 60.482-7(f)(1)]

(B) Is operated with emissions less than 500 ppm above background as determined by the method specified in 40 CFR 60.485(c), and [40 CFR 60.482-7(f)(2)]

(C) Is tested for compliance with 40 CFR 60.482-7(f)(2) initially upon designation, annually, and at other times requested by EPA. [40 CFR 60.482-7(f)(3)]

(viii) Any valve that is designated, as described in 40 CFR 60.486(f)(1), as an unsafe-to-monitor valve is exempt from the requirements of 40 CFR 60.482-7(a) if the Permittee demonstrates that the valve is unsafe to monitor because monitoring personnel would be exposed to an immediate danger as a consequence of complying with 40 CFR 60.482-7(a), and the Permittee adheres to a written plan that requires monitoring of the valve as frequently as practicable during safe-to-monitor times. [40 CFR 60.482-7(g)]

(ix) Any valve that is designated, as described in 40 CFR 60.486(f)(2), as a difficult-to-monitor valve is exempt from the requirements of 40 CFR 60.482-7(a) if:

(A) The Permittee of the valve demonstrates that the valve cannot be monitored without elevating the monitoring personnel more than 2 meters above a support surface. [40 CFR 60.482-7(h)(1)]

(B) The process unit within which the valve is located either becomes an affected facility through 40 CFR 60.14 or 40 CFR 60.15 or the Permittee designates less than 3.0 percent of the total number of valves as difficult-to-monitor, and [40 CFR 60.482-7(h)(2)]

(C) The Permittee of the valve follows a written plan that requires monitoring of the valve at least once per calendar year. [40 CFR 60.482-7(h)(3)]

(7) PUMPS AND VALVES IN HEAVY LIQUID SERVICE, PRESSURE RELIEF DEVICES IN LIGHT LIQUID OR HEAVY LIQUID SERVICE, AND FLANGES AND OTHER CONNECTORS.

(i) Pumps and valves in heavy liquid service, pressure relief devices in light liquid or heavy liquid service, and flanges and other connectors shall be monitored within 5 days by the method specified in 40 CFR 60.485(b) if evidence of a potential leak is found by visual, audible, olfactory, or any other detection method. [40 CFR 60.482-8(a)]

(ii) If an instrument reading of 10,000 ppm or greater is measured, a leak is detected. [40 CFR 60.482-8(b)]

(iii) When a leak is detected, it shall be repaired as soon as practicable, but not later than 15 calendar days after it is detected, except as provided in 40 CFR 60.482-9. [40 CFR 60.482-8(c)(1)]

(iv) The first attempt at repair shall be made no later than 5 calendar days after each leak is detected. [40 CFR 60.482-8(c)(2)]

(v) First attempts at repair include, but are not limited to, the best practices described under 40 CFR 60.482-7(e). [40 CFR 60.482-8(d)]

(8) CLOSED VENT SYSTEMS AND CONTROL DEVICES.

(i) Vapor recovery systems (for example, condensers and adsorbers) shall be designed and operated to recover the VOC emissions vented to them with an efficiency of 95 percent or greater or to an exit concentration of 20 parts per million by volume, whichever is less stringent. [40 CFR 60.482-10(b)]

(ii) Enclosed combustion devices shall be designed and operated to reduce the VOC emissions vented to them with an efficiency of 95 percent or greater, or to an exit concentration of 20 parts per million by volume, on a dry basis, corrected to 3 percent oxygen, whichever is less stringent or to provide a minimum residence time of 0.75 seconds at a minimum temperature of 816°C. [40 CFR 60.482-10(c)]

(iii) Flares shall comply with the requirements of 40 CFR 60.18. [40 CFR 60.482-10(d)]

(iv) The Permittee of control devices shall monitor these control devices to ensure that they are operated and maintained in conformance with their designs. [40 CFR 60.482-10(e)]

(v) Except as provided in 40 CFR 60.482-10(i) through 40 CFR 60.482-10(k), each closed vent system shall be inspected according to the procedures and schedule specified in 40 CFR 60.482-10(f)(1) and 40 CFR 60.482-10(f)(2). [40 CFR 60.482-10(f)]

(A) If the vapor collection system or closed vent system is constructed of hard-piping, the Permittee shall conduct an initial inspection according to the procedures in 40 CFR 60.485(b); and conduct annual visual inspections for visible, audible, or olfactory indications of leaks. [40 CFR 60.482-10(f)(1)]

(B) If the vapor collection system or closed vent system is constructed of ductwork, the Permittee shall conduct an initial inspection according to the procedures in 40 CFR 60.485(b); and conduct annual inspections according to the procedures in 40 CFR 60.485(b). [40 CFR 60.482-10(f)(2)]

(vi) Leaks, as indicated by an instrument reading greater than 500 parts per million by volume above background or by visual inspections, shall be repaired as soon as practicable except as provided in 40 CFR 60.482-10(h). [40 CFR 60.482-10(g)]

(A) A first attempt at repair shall be made no later than 5 calendar days after the leak is detected. [40 CFR 60.482-10(g)(1)]

(B) Repair shall be completed no later than 15 calendar days after the leak is detected. [40 CFR 60.482-10(g)(2)]

(vii) Delay of repair of a closed vent system for which leaks have been detected is allowed if the repair is technically infeasible without a process unit shutdown or if the Permittee determines that emissions resulting from immediate repair would be greater than the fugitive emissions likely to result from delay of repair. Repair of such equipment shall be complete by the end of the next process unit shutdown. [40 CFR 60.482-10(h)]

(viii) If a vapor collection system or closed vent system is operated under a vacuum, it is exempt from the inspection requirements of 40 CFR 60.482-10(f)(10)(i) and 40 CFR 60.482-10(f)(2). [40 CFR 60.482-10(i)]

(ix) Any parts of the closed vent system that are designated as described in 40 CFR 60.482-10(l)(1), as unsafe to inspect are exempt from the inspection requirements of 40 CFR 60.482-10(f)(10)(i) and 40 CFR 60.482-10(f)(2) if they comply with the requirements specified in 40 CFR 60.482-10(j)(1) and 40 CFR 60.482-10 (j)(2): [40 CFR 60.482-10(j)]

(A) The Permittee determines that the equipment is unsafe to inspect because inspecting personnel would be exposed to an imminent or potential danger as a consequence of complying with 40 CFR 60.482-10(f)(1)(i) or 40 CFR 60.482-10(f)(2); and [40 CFR 60.482-10(j)(1)]

(B) The Permittee has a written plan that requires inspection of the equipment as frequently as practicable during safe-to-inspect times. [40 CFR 60.482-10(j)(2)]

(x) Any parts of the closed vent system that are designated, as described in 40 CFR 60.482-10(l)(2), as difficult to inspect are exempt from the inspection requirements of 40 CFR 60.482-10(f)(10)(i) and 40 CFR 60.482-10(f)(2) if they comply with the requirements specified in of 40 CFR 60.482-10(k)(1) through 40 CFR 60.482-10(k)(3): [40 CFR 60.482-10(k)]

(A) The Permittee determines that the equipment cannot be inspected without elevating the inspecting personnel more than 2 meters above a support surface; and [40 CFR 60.482-10(k)(1)]

(B) The process unit within which the closed vent system is located becomes an affected facility through 40 CFR 60.14 or 60.15, or the Permittee designates less than 3.0 percent of the total number of closed vent system equipment as difficult to inspect; and [40 CFR 60.482-10(k)(2)]

(C) The Permittee has a written plan that requires inspection of the equipment at least once every 5 years. A closed vent system is exempt from inspection if it is operated under a vacuum. [40 CFR 60.482-10(k)(3)]

(xi) Closed vent systems and control devices shall be operated at all times when emissions may be vented to them. [40 CFR 60.482-10(m)]

(9) ALTERNATIVE STANDARDS FOR VALVES

(i) The Permittee may elect to comply with an allowable percentage of valves leaking of equal to or less than 2.0 percent. [40 CFR 60.483-1(a)]

(ii) The following requirements shall be met if the Permittee wishes to comply with an allowable percentage of valves leaking:

(A) The Permittee must notify the EPA Administrator and AMS that the Permittee has elected to comply with the allowable percentage of valves

leaking before implementing this alternative standard. [40 CFR 60.483-1(b)(1)]

(B) A performance test as specified in 40 CFR 60.483-1(c) shall be conducted initially upon designation, annually, and at other times requested by the EPA Administrator and AMS. [40 CFR 60.483-1(b)(2)]

(C) If a valve leak is detected, it shall be repaired in accordance with 40 CFR 60.482-7(d) and 40 CFR 60.482-7(e). [40 CFR 60.483-1(b)(3)]

(iii) Performance tests shall be conducted in the following manner:

(A) All valves in gas/vapor and light liquid service within the affected facility shall be monitored within 1 week by the methods specified in 40 CFR 60.485(b). [40 CFR 60.483-1(c)(1)]

(B) If an instrument reading of 10,000 ppm or greater is measured, a leak is detected. [40 CFR 60.483-1(c)(2)]

(C) The leak percentage shall be determined by dividing the number of valves for which leaks are detected by the number of valves in gas/vapor and light liquid service within the affected facility. [40 CFR 60.483-1(c)(3)]

(iv) The Permittee who elects to comply with this alternative standard shall not have an affected facility with a leak percentage greater than 2.0 percent. [40 CFR 60.483-1(d)]

(v) ALTERNATIVE STANDARDS FOR VALVES-SKIP PERIOD LEAK DETECTION AND REPAIR.

(A)(1) The Permittee may elect to comply with one of the alternative work practices specified in 40 CFR 60.483-2(b)(2) and 40 CFR 60.483-2(b)(3). [40 CFR 60.483-2(a)]

(2) The Permittee must notify EPA before implementing one of the alternative work practices, as specified in 40 CFR 60.487(d). [40 CFR 60.483-2(a)(2)]

(B)(1) The Permittee shall comply initially with the requirements for valves in gas/vapor service and valves in light liquid service, as described in 40 CFR 60.482-7. [40 CFR 60.483-2(b)(1)]

(2) After 2 consecutive quarterly leak detection periods with the percent of valves leaking equal to or less than 2.0, a Permittee may begin to skip 1 of the quarterly leak detection periods for the valves in gas/vapor and light liquid service. [40 CFR 60.483-2(b)(2)]

(3) After 5 consecutive quarterly leak detection periods with the percent of valves leaking equal to or less than 2.0, the Permittee may begin to skip 3 of the quarterly leak detection periods for the valves in gas/vapor and light liquid service. [40 CFR 60.483-2(b)(3)]

(4) If the percent of valves leaking is greater than 2.0, the Permittee shall comply with the requirements as described in 40 CFR 60.482-7 but can again elect to use 40 CFR 60.483-2. [40 CFR 60.483-2(b)(4)]

(5) The percent of valves leaking shall be determined by dividing the sum of valves found leaking during current monitoring and valves for which

repair has been delayed by the total number of valves subject to the requirements of 40 CFR 60.483-2. [40 CFR 60.483-2(b)(5)]

(6) The Permittee must keep a record of the percent of valves found leaking during each leak detection period. [40 CFR 60.483-2(b)(6)]

(10) DELAY OF REPAIR.

(i) Delay of repair of equipment for which leaks have been detected will be allowed if repair within 15 days is technically infeasible without a process unit shutdown. Repair of this equipment shall occur before the end of the next process unit shutdown. Monitoring to verify repair must occur within 15 days after startup of the process unit. [40 CFR 60.482-9(a)]

(ii) Delay of repair of equipment will be allowed for equipment which is isolated from the process and which does not remain in VOC service. [40 CFR 60.482-9(b)]

Delay of repair for valves will be allowed if:

(A) The Permittee demonstrates that emissions of purged material resulting from immediate repair are greater than the fugitive emissions likely to result from delay of repair, and [40 CFR 60.482-9(c)(1)]

(B) When repair procedures are effected, the purged material is collected and destroyed or recovered in a control device complying with 40 CFR 60.482-10. [40 CFR 60.482-9(c)(2)]

(iii) Delay of repair for pumps will be allowed if:

(A) Repair requires the use of a dual mechanical seal system that includes a barrier fluid system, and [40 CFR 60.482-9(d)(1)]

(B) Repair is completed as soon as practicable, but not later than 6 months after the leak was detected. [40 CFR 60.482-9(d)(2)]

(iv) Delay of repair beyond a process unit shutdown will be allowed for a valve, if valve assembly replacement is necessary during the process unit shutdown, valve assembly supplies have been depleted, and valve assembly supplies had been sufficiently stocked before the supplies were depleted. Delay of repair beyond the next process unit shutdown will not be allowed unless the next process unit shutdown occurs sooner than 6 months after the first process unit shutdown. [40 CFR 60.482-9(e)]

(11) The Permittee shall use the definitions provided in the Federal New Source Performance Standards (NSPS) to designate streams subject to monitoring in order to comply with 25 PA Code §129.58. The testing and monitoring requirements specified in 25 PA Code §129.58 are applied to sources that handle gas or "light" liquids (meeting the definition of 40 CFR 60.485(e)). Heavy liquid shall be monitored based on visual, audible, or olfactory means of detection. A source is considered to be in VOC service if it contacts or contains a gas or liquid that has at least 10% VOC by weight. [AMS Letter dated May 30, 2000, 25 PA Code §129.58(g)]

(12) The Permittee is required to comply with AMR V. Sec. XIII that prohibits the emissions of VOC in a liquid state at the point(s) of discharge into the atmosphere. [AMS Letter dated May 30, 2000 and AMR V. Sec. XIII.A.2.]

(b) Testing Requirements

[25 PA Code §139]

(1) The Permittee shall determine compliance with the standards in 40 CFR 60.482, 40 CFR 60.483, and 40 CFR 60.484 as follows: [40 CFR 60.485(b)]

(i) Method 21 shall be used to determine the presence of leaking sources. The instrument shall be calibrated before use each day of its use by the procedures specified in Method 21. The following calibration gases shall be used: [40 CFR 60.485(b)(1)]

(A) Zero air (less than 10 ppm of hydrocarbon in air); and [40 CFR 60.485(b)(1)(i)]

(B) A mixture of methane or n-hexane and air at a concentration of about, but less than, 10,000 ppm methane or n-hexane. [40 CFR 60.485(b)(1)(ii)]

(2) The Permittee shall determine compliance with the no detectable emission standards in 40 CFR 60.482-2(e), 40 CFR 60.482-3i, 40 CFR 60.482-4, 40 CFR 60.482-7(f), and 40 CFR 60.482-10(e) as follows: [40 CFR 60.485(c)]

(i) The requirements of 40 CFR 60.485(b) shall apply. [40 CF 60.485(c)(1)]

(ii) Method 21 shall be used to determine the background level. All potential leak interfaces shall be traversed as close to the interface as possible. The arithmetic difference between the maximum concentration indicated by the instrument and the background level is compared with 500 ppm for determining compliance. [40 CFR 60.485(c)(2)]

(3) The Permittee shall test each piece of equipment unless he demonstrates that a process unit is not in VOC series, i.e., that the VOC content would never be reasonably expected to exceed 10 percent by weight. For purposes of this demonstration, the following methods and procedures shall be used: [40 CFR 60.485(d)]

(i) Procedures that conform to the general methods in ASTM E-260, E-168, E-169 (incorporated by reference – see 40 CFR 60.17) shall be used to determine the percent VOC content in the process fluid that is contained in or contacts a piece of equipment. [40 CFR 60.485(d)(1)]

(ii) Organic compounds that are considered by the EPA Administrator and AMS to have negligible photochemical reactivity may be excluded from the total quantity of organic compounds in determining the VOC content of the process fluid. [40 CFR 60.485(d)(2)]

(iii) Engineering judgment may be used to estimate the VOC content, if a piece of equipment had not been shown previously to be in service. If the EPA Administrator and AMS disagrees with the judgment, 40 CFR 60.486(d)(1) and (2) shall be used to resolve the disagreement. [40 CFR 60.485(d)(3)]

(4) The Permittee shall demonstrate that an equipment is in light liquid service by showing that all the following conditions apply:

(i) The vapor pressure of one or more of the components is greater than 0.3 kPa at 20° C. Standard reference texts or ASTM D-2879 (incorporated by reference – see 40 CFR 60.17) shall be used to determine the vapor pressures. [40 CFR 60.485(e)(1)]

(ii) The total concentration of the pure components having a vapor pressure greater than 0.3 kPa at 20° C is equal to or greater than 20 percent by weight. [40 CFR 60.485(e)(2)]

(iii) The fluid is a liquid at operating conditions. [40 CFR 60.485(e)(3)]

(5) Samples used in conjunction with 40 CFR 60.486(d), (e), and (g) shall be representative of the process fluid that is contained in or contacts the equipment or the gas being combusted in the flare. [40 CFR 60.485(f)]

(6) The Permittee shall determine compliance with the standards of flares as follows: [40 CFR 60.485(g)]

(i) Method 22 shall be used to determine visible emissions. [40 CFR 60.485(g)(1)]

(ii) A thermocouple or any other equivalent device shall be used to monitor the presence of a pilot flame in the flare. [40 CFR 60.485(g)(2)]

(iii) The maximum permitted velocity (V_{max}) for air-assisted flares shall be computed using the following equation: [40 CFR 60.485(g)(3)]

$V_{max} = 8.706+0.7084H_T$

Where:

V_{max} = maximum permitted velocity, m/sec

H_T = net heating value of the gas being combusted, MJ/scm.

(iv) The net heating value (H_T) of the gas being combusted in a flare shall be computed as follows: [40 CFR 60.485(g)(4)]

$H_T = K\ C_iH_i$

Where:

K = conversion constant, 1.740*10^7 [(g-mole)(MJ)]/[(ppm)(scm)(kcal)]

C_i = concentration of sample component "I", ppm.

H_i = net heat of combustion of sample component "I" at 25° C and 760 mm HG, kcal/g-mole

(v) Method 18 and ASTM D 2504-67 (incorporated by reference – see 40 CFR 60.17) shall be used to determine the concentration of sample component "i." [40 CFR 60.485(g)(5)]

(vi) ASTM D 2382-76 (incorporated by reference – see 40 CFR 60.17) shall be used to determine the net heat of combustion of component "i" if published values are not available or cannot be calculated. [40 CFR 60.485(g)(6)]

(vii) Method 2, 2A, 2C, or 2D, as appropriate, shall be used to determine the actual exit velocity of a flare. If needed, the unobstructed (free) cross-sectional area of the flare tip shall be used. [40 CFR 60.485(g)(7)]

(c) Recordkeeping Requirements

[25 PA Code §§127.511, 135.21, 135.5 & 139]

The Permittee shall keep the following records:

(1) The Permittee of more than one affected facility may comply with the recordkeeping requirements for these facilities in one recordkeeping system if the system identifies each record by each facility. [40 CFR 60.486(a)(2)]

(2) When each leak is detected, as specified in 40 CFR 60.482-2, 40 CFR 60-482-3, 40 CFR 60.482-7, 40 CFR 60.482-8, and 40 CFR 60.483-2, the following requirements apply: [40 CFR 60.486(b)]

(i) A weatherproof and readily visible identification, marked with the equipment identification number, shall be attached to the leaking equipment. [40 CFR 60.486(b)(1)]

(ii) The identification on a valve may be removed after it has been monitored for 2 successive months as specified in 40 CFR 60.482-7(c) and no leak has been detected during those 2 months. [40 CFR 60.486(b)(2)]

(iii) The identification on equipment except on a valve, may be removed after it has been repaired. [40 CFR 60.486(b)(3)]

(3) When each leak is detected as specified in 40 CFR 60.482-2, 40 CFR 60-482-3, 40 CFR 60.482-7, 40 CFR 60.482-8, and 40 CFR 60.483-2, the following information shall be recorded in a log and shall be kept for 5 years in a readily accessible location: [40 CFR 60.486(c)]

(i) The instrument and operator identification numbers and the equipment identification number. [40 CFR 60.486(c)(1)]

(ii) The date the leak was detected and the dates of each attempt to repair the leak. [40 CFR 60.486(c)(2)]

(iii) Repair methods applied in each attempt to repair the leak. [40 CFR 60.486(c)(3)]

(iv) "Above 10,000" if the maximum instrument reading measured by the methods specified in 40 CFR 60.485(a) after each repair attempt is equal to or greater than 10,000 ppm. [40 CFR 60.486(c)(4)]

(v) "Repair delayed" and the reason for the delay if a leak is not repaired within 15 calendar days after discovery of the leak. [40 CFR 60.486(c)(5)]

(vi) The signature of the individual whose decision it was that repair could not be effected without a process shutdown. [40 CFR 60.486(c)(6)]

(vii) The expected date of successful repair of the leak if a leak is not repaired within 15 days. [40 CFR 60.486(c)(7)]

(viii) Dates of process unit shutdown that occur while the equipment is unrepaired. [40 CFR 60.486(c)(8)]

(ix) The date of successful repair of the leak. [40 CFR 60.486(c)(9)]

(4) The following information pertaining to the design requirements for closed vent systems and control devices described in 40 CFR 60.482-10 shall be recorded and kept in a readily accessible location: [40 CFR 60.486(d)]

(i) Detailed schematics, design specifications, and piping and instrumentation diagrams. [40 CFR 60.486(d)(1)]

(ii) The dates and descriptions of any changes in the design specifications. [40 CFR 60.486(d)(2)]

(iii) A description of the parameter or parameters monitored, as required in 40 CFR 60.482-10(e), to ensure that control devices are operated and maintained in conformance with their design and an explanation of why that

parameter (or parameters) was selected for the monitoring. [40 CFR 60.486(d)(3)]

(iv) Periods when the closed vent systems and control devices required in 40 CFR 60.482-2, 40 CFR 60.482-3, 40 CFR 60.482-2, 40 CFR 60.482-5 are not operated as designed, including periods when a flare pilot light does not have a flame. [40 CFR 60.486(d)(4)]

(v) Dates of startups and shutdowns of the closed vent systems and control devices required in 40 CFR 60.482-2, 40 CFR 60.482-3, 40 CFR 60.482-2, 40 CFR 60.482-5. [40 CFR 60.486(d)(5)]

(vi) Identification of all parts of the closed vent system that are designated as unsafe to inspect, an explanation of why the equipment is unsafe to inspect, and the plan for inspecting the equipment. [40 CFR 60.482-10(l)(1)]

(vii) Identification of all parts of the closed vent system that are designated as difficult to inspect, an explanation of why the equipment is difficult to inspect, and the plan for inspecting the equipment. [40 CFR 60.482-10(l)(2)]

(viii) For each inspection during which a leak is detected, a record of the information specified in 40 CFR 60.486(c) [40 CFR 60.482-10(l)(3)].

(ix) For each inspection conducted in accordance with 40 CFR 60.485(b) during which no leaks are detected, a record that the inspection was performed, the date of the inspection, and a statement that no leaks were detected. [40 CFR 60.482-10(l)(4)]

(x) For each visual inspection during which no leaks are detected, a record that the inspection was performed, the date of the inspection, and a statement that no leaks were detected. [40 CFR 60.482-10(l)(5)]

(5) The following information pertaining to all equipment subject to the requirements in 40 CFR 60.482-1 to 60.482-10 shall be recorded in a log that is kept in a readily accessible location: [40 CFR 60.486(e)]

(i) A list of identification numbers for subject equipment. [40 CFR 60.486(e)(1)]

(ii) A list of identification numbers for equipment that are designated for no detectable emissions. [40 CFR 60.486(e)(2)(i)]

(iii) The designation of equipment as subject to the requirements 40 CFR 60.482-2(e), 40 CFR 60.482-3(i), and 40 CFR 60.482-7(f) shall be signed by the Permittee. [40 CFR 60.486(e)(2)(ii)]

(iv) A list of equipment identification numbers for pressure relief devices in gas/vapor service required to comply with 40 CFR 60.482-4. [40 CFR 60.486(e)(3)]

(v) The dates of each compliance test as required in 40 CFR 60.482-2(e), 40 CFR 60.482-3(i), 40 CFR 60.482-4, and 40 CFR 60.482-7(f). [40 CFR 60.486(e)(4)(i)]

(vi) The background level measured during each compliance test. [40 CFR 60.486(e)(4)(ii)]

(vii) The maximum instrument reading measured at the equipment during each compliance test. [40 CFR 60.486(e)(4)(iii)]

(viii) A list of identification numbers for equipment in vacuum service. [40 CFR 60.486(e)(5)]

(ix) The following information pertaining to all valves subject to the requirements of 40 CFR 60.482-7(g) and 40 CFR 60.482-7(h) shall be recorded in a log that is kept in a readily accessible location: [40 CFR 60.486(f)]

(x) A list of identification numbers for valves that are designated as unsafe-to-monitor, an explanation for each valve stating why the valve is unsafe-to-monitor, and the plan for monitoring each valve. [40 CFR 60.486(f)(1)]

(xi) A list of identification numbers for valves that are designated as difficult-to-monitor, an explanation for each valve stating why the valve is difficult-to-monitor, and the schedule for monitoring each value. [40 CFR 60.486(f)(2)]

(6) The following information shall be recorded in a log that is kept in a readily accessible location: [40 CFR 60.486(h)]

(i) Design criterion required in 40 CFR 60.482-2(d)(5) and 40 CFR 60.482-3(e)(2) and explanation of the design criterion; and [40 CFR 60.486(h)(1)]

(ii) Any changes to this criterion and the reasons for the changes. [40 CFR 60.486(h)(2)]

(7) The following information shall be recorded in a log that is kept in a readily accessible location for use in determining exemptions as provided in 40 CFR 60.480(d): [40 CFR 60.486(i)]

(i) An analysis demonstrating the design capacity of the affected facility, [40 CFR 60.486(i)(1)]

(ii) A statement listing the feed or raw materials and products from the affected facilities and an analysis demonstrating whether these chemicals are heavy liquids or beverage alcohol, and [40 CFR 60.486(i)(2)]

(iii) An analysis demonstrating that equipment is not in VOC service. [40 CFR 60.486(i)(3)]

(8) Information and data used to demonstrate that a piece of equipment is not in VOC service shall be recorded in a log that is kept in a readily accessible location. [40 CFR 60.486(j)]

(9) The provisions of 40 CFR 60.7(b) and 40 CFR 60.7(d) do not apply to affected facilities subject to 40 CFR 60.486. [40 CFR 60.486(k)]

(10) The signature of the Permittee (or designate) whose decision it was that a repair could not be effected without a process shutdown is not required to be recorded. Instead, the name of the person whose decision it was that a repair could not be effected without a process shutdown shall be recorded and retained for 2 years. [40 CFR 63.655(d)(1)(i)]

(d) Reporting Requirements

(1) The Permittee subject to the provisions of 40 CFR 60 Subpart VV shall submit semiannual reports to EPA and AMS beginning six months after the initial start-up date. [40 CFR 60.487(a)]

(2) The initial semiannual report to EPA shall include the following information: [40 CFR 60.487(b)]

(i) Process unit identification. [40 CFR 60.487(b)(1)]

(ii) Number of valves subject to the requirements of 40 CFR 60.482-7, excluding those valves designated for no detectable emissions under the provisions of 40 CFR 60.482-7(f). [40 CFR 60.482-7(b)(2)]

(iii) Number of pumps subject to the requirements of 40 CFR 60.482-2, excluding those pumps designated for no detectable emissions under the provisions of 40 CFR 60.482-2(e) and those pumps complying with 40 CFR 60.482-2(f). [40 CFR 60.487(b)(3)]

(iv) Number of compressors subject to the requirements of 40 CFR 60.482-3, excluding those compressors designated for no detectable emissions under the provisions of 40 CFR 60.482-3(i) and those compressors complying with 40 CFR 60.482-3(h). [40 CFR 60.487(b)(4)]

(3) All semiannual reports to EPA shall include the following information, summarized from the information in 40 CFR 60.486: [40 CFR 60.487(c)]

(i) Process unit identification. [40 CFR 60.487(c)(1)]

(ii) For each month during the semiannual reporting period:

(A) Number of valves for which leaks were detected as described in 40 CFR 60.482(7)(b) or 40 CFR 60.483-2, [40 CFR 60.487(c)(2)(i)]

(B) Number of valves for which leaks were not repaired as required in 40 CFR 60.482-7(d)(1), [40 CFR 60.487(c)(2)(ii)]

(C) Number of pumps for which leaks were detected as described in 40 CFR 60.482-2(b) and 40 CFR 60.482-2(d)(6)(i), [40 CFR 60.487(c)(2)(iii)]

(D) Number of pumps for which leaks were not repaired as required in 40 CFR 60.482-2(c)(1) and 40 CFR 60.482-2(d)(6)(ii), [40 CFR 60.487(c)(2)(iv)]

(E) Number of compressors for which leaks were detected as described in 40 CFR 60.482-3(f), [40 CFR 60.487(c)(2)(v)]

(F) Number of compressors for which leaks were not repaired as required in 40 CFR 60.482-3(g)(1), and [40 CFR 60.487(c)(2)(vi)]

(G) The facts that explain each delay of repair and, where appropriate, why a process unit shutdown was technically infeasible. [40 CFR 60.487(c)(2)(vii)]

(iii) Dates of process unit shutdowns which occurred within the semiannual reporting period. [40 CFR 60.487(c)(3)]

(iv) Revisions to items reported according to 40 CFR 60.487(b) if changes have occurred since the initial report or subsequent revisions to the initial report. [40 CFR 60.487(c)(4)]

(4) The Permittee electing to comply with the provisions of 40 CFR 60.483-1 or 40 CFR 60.483-2 shall notify EPA Administrator and AMS of the alternative standard selected 90 days before implementing either of the provisions. [40 CFR 60.487(d)]

8. Group 07 – SOCMI or Refinery NESHAP Components, and Certain VOC Components, Subject to 40 CFR 63 Subpart H

[40 CFR 63.160-182; 25 Pa Code 129.58; AMR V Section XIII A & E, and 40 CFR 63.648(c)]

Refer to Summary Table in Section D.7. that summarizes leak detection and repair regulatory applicabilities for individual components within each process unit of the refinery.

(a) Work Practice Standards

(1) PUMPS. The Permittee shall monitor each pump (in light liquid service) monthly to detect leaks by the method specified in 40 CFR 63.180(b) and shall comply with the requirements of 40 CFR 63.180(a) through 40 CFR 63.180(d), except as provided in 40 CFR 63.162(b) and 40 CFR 63.180(e) through 40 CFR 63.180(j). [40 CFR 63.163(b)(1)]

(2) The instrument reading, as determined by the method as specified in 40 CFR 63.180(b), that defines a leak 1,000 parts per million or greater for all pumps. [40 CFR 63.163(b)(2)(iii)(C)]

(3) Each pump shall be checked by visual inspection each calendar week for indications of liquids dripping from the pump seal. If there are indications of liquids dripping from the pump seal, a leak is detected. [40 CFR 63.163(b)(3)]

(4) PUMP REPAIRS.

(i) When a leak is detected, it shall be repaired as soon as practicable, but not later than 15 calendar days after it is detected, except as provided in 40 CFR 63.163(c)(3) or 40 CFR 63.171. [40 CFR 63.163(c)(1)]

(ii) A first attempt at repair shall be made no later than 5 calendar days after the leak is detected. First attempts at repair include, but are not limited to, the following practices where practicable: [40 CFR 63.163(c)(2)]

(A) Tightening of packing gland nuts. [40 CFR 63.163(c)(2)(i)]

(B) Ensuring that the seal flush is operating at design pressure and temperature. [40 CFR 63.163(c)(2)(ii)]

(iii) Repair is not required unless an instrument reading of 2,000 parts per million or greater is detected. [40 CFR 63.163(c)(3)]

(5) LEAKING PUMPS.

(i) The Permittee shall decide no later than the first monitoring period whether to calculate percent leaking pumps on a process unit basis or on a source-wide basis. Once the Permittee has decided, all subsequent percent calculations shall be made on the same basis. [40 CFR 63.163(d)(1)]

(ii) If the greater of either 10 percent of the pumps in a process unit or three pumps in a process unit leak is calculated on a 6-month rolling average, the Permittee shall implement a quality improvement program for pumps that complies with the requirements of 40 CFR 63.176. [40 CFR 63.163(d)(2)]

(iii) The number of pumps at a process unit shall be the sum of all the pumps in organic HAP service, except that pumps found leaking in a continuous process unit within 1 month after start-up of the pump shall not count in the

percent leaking pumps calculation for that one monitoring period only. [40 CFR 63.163(d)(3)]

(iv) Percent leaking pumps shall be determined by the following equation [40 CFR 63.163(d)(4)]:

$$\%P_L=((P_L-P_S)/(P_T-P_S))\times 100$$

where:

$\%P_L$=Percent leaking pumps

P_L=Number of pumps found leaking as determined through monthly monitoring.

P_T=Total pumps in organic HAP service, including those meeting the criteria in 40 CFR 63.163(d)(6) and 40 CFR 63.163(d)(7).

P_S=Number of pumps leaking within 1 month of start-up during the current monitoring period.

(6) Each pump equipped with a dual mechanical seal system that includes a barrier fluid system is exempt from the requirements of 40 CFR 63.163(a) through 40 CFR 63.163(d), provided the following requirements are met: [40 CFR 63.163(e)]

(i) Each dual mechanical seal system is:

(A) Operated with the barrier fluid at a pressure that is at all times greater than the pump stuffing box pressure; or [40 CFR 63.163(e)(1)(i)]

(B) Equipped with a barrier fluid degassing reservoir that is routed to a process or fuel gas system or connected by a closed-vent system to a control device that complies with the requirements of 40 CFR 63.172; or [40 CFR 63.163(e)(1)(ii)]

(C) Equipped with a closed-loop system that purges the barrier fluid into a process stream. [40 CFR 63.163(e)(1)(iii)]

(ii) The barrier fluid is not in light liquid service. [40 CFR 63.163(e)(2)]

(iii) Each barrier fluid system is equipped with a sensor that will detect failure of the seal system, the barrier fluid system, or both. [40 CFR 63.163(e)(3)]

(iv) Each pump is checked by visual inspection each calendar week for indications of liquids dripping from the pump seal. [40 CFR 63.163(e)(4)]

(A) If there are indications of liquids dripping from the pump seal at the time of the weekly inspection, the pump shall be monitored as specified in 40 CFR 63.180(b) to determine if there is a leak of organic HAP in the barrier fluid. [40 CFR 63.163(e)(4)(i)]

(B) If an instrument reading of 1,000 parts per million or greater is measured, a leak is detected. [40 CFR 63.163(e)(4)(ii)]

(v) Each sensor as described in 40 CFR 63.163(e)(3) is observed daily or is equipped with an alarm unless the pump is located within the boundary of an unmanned plant site. [40 CFR 63.163(e)(5)]

(vi) PRESENCE OF DRIPS.

(A) The Permittee determines, based on design considerations and operating experience, criteria applicable to the presence and frequency of drips and

to the sensor that indicates failure of the seal system, the barrier fluid system, or both. [40 CFR 63.163(e)(6)(i)]

(B) If indications of liquids dripping from the pump seal exceed the criteria established in 40 CFR 63.163(5)(6)(i), or if, based on the criteria established in 40 CFR 63.163(5)(6)(i), the sensor indicates failure of the seal system, the barrier fluid system, or both, a leak is detected. [40 CFR 63.163(e)(6)(ii)].

(C) When a leak is detected, it shall be repaired as soon as practicable, but not later than 15 calendar days after it is detected, except as provided in 40 CFR 63.171. [40 CFR 63.163(e)(6)(iii)]

(D) A first attempt at repair shall be made no later than 5 calendar days after each leak is detected. [40 CFR 63.163(e)(6)(iv)]

(7) Any pump that is designed with no externally actuated shaft penetrating the pump housing is exempt from the requirements of 40 CFR 63.163(a) through 40 CFR 63.163(c). [40 CFR 63.163(f)]

(8) Any pump equipped with a closed-vent system capable of capturing and transporting any leakage from the seal or seals to a process or to a fuel gas system or to a control device that complies with the requirements of 40 CFR 63.172 is exempt from the requirements of 40 CFR 63.163(b) through 40 CFR 63.163(e). [40 CFR 63.163(g)]

(9) If more than 90 percent of the pumps at a process unit meet the criteria in either 40 CFR 63.163(e) or 40 CFR 63.163(f)., the process unit is exempt from the requirements of 40 CFR 63.163(d). [40 CFR 63.163(i)]

(10) Any pump that is designated, as described in 40 CFR 63.181(b)(7)(i), as an unsafe-to-monitor pump is exempt from the requirements of 40 CFR 63.163(b) through 40 CFR 63.163(e) if:

(i) The Permittee determines that the pump is unsafe to monitor because monitoring personnel would be exposed to an immediate danger as a consequence of complying with 40 CFR 63.163(b) through 40 CFR 63.163(d). [40 CFR 63.163(j)(1)]; and

(ii) The Permittee has a written plan that requires monitoring of the pump as frequently as practical during safe-to-monitor times, but not more frequently than the periodic monitoring schedule otherwise applicable. [40 CFR 63.163(j)(2)]

(11) PRESSURE RELIEF DEVICES. Except during pressure releases, each pressure relief device in gas/vapor service shall be operated with an instrument reading of less than 500 parts per million above background except as provided in 40 CFR 63.165(b), as measured by the method specified in 40 CFR 63.180(c). [40 CFR 63.165(a)]

(i) After each pressure release, the pressure relief device shall be returned to a condition indicated by an instrument reading of less than 500 parts per million above background, as soon as practicable, but no later than 5 calendar days after each pressure release, except as provided in 40 CFR 63.171. [40 CFR 63.165(b)(1)]

(ii) No later than 5 calendar days after the pressure release and being returned to organic HAP service, the pressure relief device shall be monitored to confirm the condition indicated by an instrument reading of less than 500 parts per million above background, as measured by the method specified in 40 CFR 63.180(c). [40 CFR 63.165(b)(2)]

(12) Any pressure relief device that is routed to a process or fuel gas system or equipped with a closed-vent system capable of capturing and transporting leakage from the pressure relief device to a control device as described in 40 CFR 63.172 is exempt from the requirements of 40 CFR 63.165(a) and 40 CFR 63.165(b). [40 CFR 63.165(c)]

(13) Any pressure relief device that is equipped with a rupture disk upstream of the pressure relief device is exempt from the requirements of 40 CFR 63.165(a) and 40 CFR 63.165(b), provided the Permittee complies with the requirements in 40 CFR 63.165(d)(2). [40 CFR 63.165(d)(1)]

(14) After each pressure release, a rupture disk shall be installed upstream of the pressure relief device as soon as practicable, but no later than 5 calendar days after each pressure release, except as provided in 40 CFR 63.171. [40 CFR 63.165(d)(2)]

(15) SAMPLING CONNECTION SYSTEMS. Each sampling connection system shall be equipped with a closed-purge, closed-loop, or closed-vent system, except as provided in 40 CFR 63.162(b). Gases displaced during filling of the sample container are not required to be collected or captured. [40 CFR 63.166(a)]

(16) Each closed-purge, closed-loop, or closed-vent system as required in 40 CFR 63.166(a) shall: [40 CFR 63.166(b)]

(i) Return the purged process fluid directly to the process line; or [40 CFR 63.166(b)(1)]

(ii) Collect and recycle the purged process fluid to a process; or [40 CFR 63.166(b)(2)]

(iii) Be designed and operated to capture and transport the purged process fluid to a control device that complies with the requirements of 40 CFR 63.172; or [40 CFR 63.166(b)(3)]

(iv) Collect, store, and transport the purged process fluid to a system or facility identified in 40 CFR 63.166(b)(4)(i), 40 CFR 63.166(b)(4)(ii), or 40 CFR 63.166(b)(4)(iii)]. [40 CFR 63.166(b)(4)]

(A) A waste management unit as defined in 40 CFR 63.111 of subpart G of 40 CFR 63, if the waste management unit is subject to, and operated in compliance with the provisions of subpart G of 40 CFR 63 applicable to group 1 wastewater streams. If the purged process fluid does not contain any organic HAP listed in Table 9 of subpart G of 40 CFR 63, the waster management unit need not be subject to, and operated in compliance with the requirements of 40 CFR 63, subpart G applicable to group 1 wastewater streams provided the facility has an NPDES permit or sends the wastewater to an NPDES permitted facility. [40 CFR 63.166(b)(4)(i)]

(B) A treatment, storage, or disposal facility subject to regulation under 40 CFR part 262, 264, 265, or 266; or [40 CFR 63.166(b)(4)(ii)]

(C) A facility permitted, licensed, or registered by a State to manage municipal or industrial solid waste, if the process fluids are not hazardous waste as defined in 40 CFR part 261. [40 CFR 63.166(b)(4)(iii)]

(17) VALVES IN GAS/VAPOR SERVICE AND IN LIGHT LIQUID SERVICE. The provisions of this section apply to valves that are either in gas service or in light liquid service. The valves shall be monitored to detect leaks by the method specified in 40 CFR 63.180(b). The instrument reading that defines a leak is an instrument reading of 500 parts per million or greater. [40 CFR 63.168(a), 40 CFR 63.168(b)(1) and 40 CFR 63.168(b)(2)(iii)]

(18) The Permittee shall monitor valves for leaks at the intervals specified below: [40 CFR 63.168(d)]

(i) At process units with 2 percent or greater leaking valves, calculated according to 40 CFR 63.168(e), the Permittee shall monitor each valve once per month. [40 CFR 63.168(d)(1)(i)]

(ii) At process units with less than 2 percent leaking valves, the Permittee shall monitor each valve once each quarter, except as provided in 40 CFR 63.168(d)(3) and 40 CFR 63.168(d)(4). [40 CFR 63.168(d)(2)]

(iii) At process units with less than 1 percent leaking valves, the Permittee may elect to monitor each valve once every 2 quarters. [40 CFR 63.168(d)(3)]

(iv) At process units with less than 0.5 percent leaking valves, the Permittee may elect to monitor each valve once every 4 quarters. [40 CFR 63.168(d)(4)]

(19) Percent leaking valves at a process unit shall be determined by the following equation: [40 CFR 63.168(e)(1)]

$$\%V_L=(V_L/(V_T+V_C))\times 100$$

where:

$\%V_L$=Percent leaking valves as determined through periodic monitoring required in 40 CFR 63.168(b) through 40 CFR 63.168(d).

V_L=Number of valves found leaking excluding nonrepairables as provided in 40 CFR 63.168(e)(3)(i).

V_T=Total valves monitored, in a monitoring period excluding valves monitored as required by 40 CFR 63.168(f)(3).

V_C=Optional credit for removed valves=0.67 × net number (i.e., total removed-total added) of valves in organic HAP service removed from process unit after the date set forth in 40 CFR 63.100(k) of subpart F for existing process units, and after the date of initial start-up for new sources. If credits are not taken, then V_C=0.

(20) For use in determining monitoring frequency, as specified 40 CFR 63.168(d), the percent leaking valves shall be calculated as a rolling average of two consecutive monitoring periods for monthly, quarterly, or semiannual monitoring programs; and as an average of any three out of four consecutive monitoring periods for annual monitoring programs. [40 CFR 63.168(e)(2)]

(21) NONREPAIRABLE VALVES.

(i) Nonrepairable valves shall be included in the calculation of percent leaking valves the first time the valve is identified as leaking and nonrepairable and as required to comply with 40 CFR 63.168(e)(3)(ii). Otherwise, a number of nonrepairable valves (identified and included in the percent leaking calculation in a previous period) up to a maximum of 1 percent of the total number of valves in organic HAP service at a process unit may be excluded from calculation of percent leaking valves for subsequent monitoring periods. [40 CFR 63.168(e)(3)(i)]

(ii) If the number of nonrepairable valves exceeds 1 percent of the total number of valves in organic HAP service at a process unit, the number of nonrepairable valves exceeding 1 percent of the total number of valves in organic HAP service shall be included in the calculation of percent leaking valves [40 CFR 63.168(e)(3)(ii)].

(22) LEAKING VALVES.

(i) When a leak is detected, it shall be repaired as soon as practicable, but no later than 15 calendar days after the leak is detected, except as provided in 40 CFR 63.171. [40 CFR 63.168(f)(1)]

(ii) A first attempt at repair shall be made no later than 5 calendar days after each leak is detected. [40 CFR 63.168(f)(2)]

(iii) When a leak has been repaired, the valve shall be monitored at least once within the first 3 months after its repair. [40 CFR 63.168(f)(3)]

(A) The monitoring shall be conducted using as specified in 40 CFR 63.180(b) and 40 CFR 63.180(c), as appropriate, to determine whether the valve has resumed leaking. [40 CFR 63.168(f)(3)(i)]

(B) Periodic monitoring required by 40 CFR 63.168(b) through 40 CFR 63.168(d) may be used to satisfy the requirements of 40 CFR 63.168(f)(3), if the timing of the monitoring period coincides with the time specified in 40 CFR 63.168(f)(3). Alternatively, other monitoring may be performed to satisfy the requirements of 40 CFR 63.168(f)(3), regardless of whether the timing of the monitoring period for periodic monitoring coincides with the time specified in 40 CFR 63.168(f)(3). [40 CFR 63.168(f)(3)(ii)]

(C) If a leak is detected by monitoring that is conducted pursuant to 40 CFR 63.168(f)(3), the Permittee shall follow the provisions of 40 CFR 63.168(f)(3)(iii)(A) and 40 CFR 63.168(f)(3)(iii)(B), to determine whether that valve must be counted as a leaking valve for purposes of 40 CFR 63.168(e). [40 CFR 63.168(f)(3)(iii)]

(1) If the Permittee elected to use periodic monitoring required by 40 CFR 63.168(b) through 40 CFR 63.168(d) to satisfy the requirements of 40 CFR 63.168(f)(3), then the valve shall be counted as a leaking valve. [40 CFR 63.168(f)(3)(iii)(A)]

(2) If the Permittee elected to use other monitoring, prior to the periodic monitoring required by 40 CFR 63.168(b) through 40 CFR 63.168(d), to satisfy the requirements of 40 CFR 63.168(f)(3), then the valve shall

be counted as a leaking valve unless it is repaired and shown by periodic monitoring not to be leaking. [40 CFR 63.168(f)(3)(iii)(B)]

(23) First attempts at repair include, but are not limited to, the following practices where practicable: [40 CFR 63.168(g)]

(i) Tightening of bonnet bolts, [40 CFR 63.168(g)(1)]

(ii) Replacement of bonnet bolts, [40 CFR 63.168(g)(2)]

(iii) Tightening of packing gland nuts, and [40 CFR 63.168(g)(3)]

(iv) Injection of lubricant into lubricated packing. [40 CFR 63.168(g)(4)]

(24) Any valve that is designated, as described in 40 CFR 63.181(b)(7)(i), as an unsafe-to-monitor valve is exempt from the requirements of 40 CFR 63.168(b) through 40 CFR 63.168(f), if: [40 CFR 63.168(h)]

(i) The Permittee determines that the valve is unsafe to monitor because monitoring personnel would be exposed to an immediate danger as a consequence of complying with 40 CFR 63.168(b) through 40 CFR 63.168(d); and [40 CFR 63.168(h)(1)]

(ii) The Permittee has a written plan that requires monitoring of the valve as frequently as practicable during safe-to-monitor times, but not more frequently than the periodic monitoring schedule otherwise applicable. [40 CFR 63.168(h)(2)]

(25) Any valve that is designated, as described in 40 CFR 63.181(b)(7)(ii), as a difficult-to-monitor valve is exempt from the requirements of 40 CFR 63.168(b) through 40 CFR 63.168(d) if: [40 CFR 63.168(h)(2)(i)]

(i) The Permittee of the valve determines that the valve cannot be monitored without elevating the monitoring personnel more than 2 meters above a support surface or it is not accessible at anytime in a safe manner; [40 CFR 63.168(i)(1)]

(ii) The process unit within which the valve is located is an existing source or the Permittee designates less than 3 percent of the total number of valves in a new source as difficult-to-monitor; and [40 CFR 63.168(i)(2)]

(iii) The Permittee of the valve follows a written plan that requires monitoring of the valve at least once per calendar year. [40 CFR 63.168(i)(3)]

(26) CONNECTORS IN GAS/VAPOR AND LIGHT LIQUID SERVICE. The Permittee shall monitor all connectors in gas/vapor and light liquid service, except as provided in 40 CFR 63.162(b) and in 40 CFR 63.174(f) through 40 CFR 63.174(h) at the intervals specified in 40 CFR 63.174(b). [40 CFR 63.174(a)]

(27) The connectors shall be monitored to detect leaks by the method specified in 40 CFR 63.180(b). [40 CFR 63.174(a)(1)]

(28) If an instrument reading greater than or equal to 500 parts per million is measured, a leak is detected. [40 CFR 63.174(a)(2)]

(29) The Permittee shall monitor for leaks at the intervals specified in either 40 CFR 63.174(b)(1) or 40 CFR 63.174(b)(2) and in 40 CFR 63.174(b)(3). [40 CFR 63.174(b)]

(i) For each group of process units within an existing source, by no later than 12 months after the compliance date, the Permittee shall monitor all connectors, except as provided in 40 CFR 63. 174(f) through 40 CFR 63. 174(h). [40 CFR 63.174(b)(1)]

(ii) After conducting the initial survey required in 40 CFR 63.174(b)(1) or 40 CFR 63.174(b)(2), the Permittee shall perform all subsequent monitoring of connectors at the frequencies specified in 40 CFR 63.174(b)(3)(I) through 40 CFR 63.174(b)(3)(v), except as provided in 40 CFR 63.174(c)(2): [40 CFR 63.174(b)(3)]

(A) Once per year (i.e., 12-month period), if the percent leaking connectors in the process unit was 0.5 percent or greater during the last required annual or biennial monitoring period. [40 CFR 63.174(b)(3)(i)]

(B) Once every 2 years, if the percent leaking connectors was less than 0.5 percent during the last required monitoring period. The Permittee may comply with this paragraph by monitoring at least 40 percent of the connectors in the first year and the remainder of the connectors in the second year. The percent leaking connectors will be calculated for the total of all monitoring performed during the 2-year period. [40 CFR 63.174(b)(3)(ii)]

(C) If the Permittee of a process unit in a biennial leak detection and repair program calculates less than 0.5 percent leaking connectors from the 2-year monitoring period, the Permittee may monitor the connectors one time every 4 years. A Permittee may comply with the requirements of this paragraph by monitoring at least 20 percent of the connectors each year until all connectors have been monitored within 4 years. [40 CFR 63.174(b)(3)(iii)]

(D) If a process unit complying with the requirements of 40 CFR 63.174(b) using a 4-year monitoring interval program has greater than or equal to 0.5 percent but less than 1 percent leaking connectors, the Permittee shall increase the monitoring frequency to one time every 2 years. The Permittee may comply with the requirements of this paragraph by monitoring at least 40 percent of the connectors in the first year and the remainder of the connectors in the second year. The Permittee may again elect to use the provisions of 40 CFR 63.174(b)(3)(iii) when the percent leaking connectors decreases to less than 0.5 percent. [40 CFR 63.174(b)(3)(iv)]

(E) If a process unit complying with requirements of 40 CFR 63.174(b)(3)(iii) using a 4-year monitoring interval program has 1 percent or greater leaking connectors, the Permittee shall increase the monitoring frequency to one time per year. The Permittee may again elect to use the provisions of 40 CFR 63.174(b)(3)(iii) when the percent leaking connectors decreases to less than 0.5 percent. [40 CFR 63.174(b)(3)(v)]

(30) NONREPAIRABLE CONNECTORS.

(i) Except as provided in 40 CFR 63.174(c)(1)(ii), each connector that has been opened or has otherwise had the seal broken shall be monitored for leaks

when it is reconnected or within the first 3 months after being returned to organic hazardous air pollutants service. If the monitoring detects a leak, it shall be repaired according to the provisions of 40 CFR 63.174(d), unless it is determined to be nonrepairable, in which case it is counted as a nonrepairable connector for the purposes of 40 CFR 63.174(i)(2). [40 CFR 63.174(c)(1)(i)]

(ii) As an alternative to the requirements in 40 CFR 63.174(c)(1)(i), the Permittee may choose not to monitor connectors that have been opened or otherwise had the seal broken. In this case, the Permittee may not count nonrepairable connectors for the purposes of 40 CFR 63.174(i)(2). The Permittee shall calculate the percent leaking connectors for the monitoring periods described in 40 CFR 63.174(b), by setting the nonrepairable component, C_{AN}, in the equation in 40 CFR 63.174(i)(2) to zero for all monitoring periods. [40 CFR 63.174(c)(1)(ii)]

(iii) The Permittee may switch alternatives described in 40 CFR 63.174(c)(1)(i) and 40 CFR 63.174(c)(1)(ii) at the end of the current monitoring period he is in, provided that it is reported as required in 40 CFR 63.182 and begin the new alternative in annual monitoring. The initial monitoring in the new alternative shall be completed no later than 12 months after reporting the switch. [40 CFR 63.174(c)(1)(iii)]

(31) When a leak is detected, it shall be repaired as soon as practicable, but no later than 15 calendar days after the leak is detected, except as provided in 40 CFR 63.174(g) and 40 CFR 63.171. A first attempt at repair shall be made no later than 5 calendar days after the leak is detected. [40 CFR 63.174(d)]

(32) Any connector that is designated, as described in 40 CFR 63.181(b)(7)(i) as an unsafe-to-monitor connector is exempt from the requirements of 40 CFR 63.174(a) if: [40 CFR 63.174(f)]

(i) The Permittee determines that the connector is unsafe to monitor because personnel would be exposed to an immediate danger as a result of complying with 40 CFR 63.174(a) through 40 CFR 63.174(e); and [40 CFR 63.174(f)(1)]

(ii) The Permittee has a written plan that requires monitoring of the connector as frequently as practicable during safe to monitor periods, but not more frequently than the periodic schedule otherwise applicable. [40 CFR 63.174(f)(2)]

(33) Any connector that is designated, as described in 40 CFR 63.181(b)(7)(iii), as an unsafe-to-repair connector is exempt from the requirements of 40 CFR 63.174(a), 40 CFR 63.174(d), and 40 CFR 63.174(e) if:

(i) The Permittee determines that repair personnel would be exposed to an immediate danger as a consequence of complying with 40 CFR 63.174(d); and [40 CFR 63.174(g)(1)]

(ii) The connector will be repaired before the end of the next scheduled process unit shutdown. [40 CFR 63.174(g)(2)]

(34) INACCESSIBLE CONNECTORS.

(i) Any connector that is inaccessible or is ceramic or ceramic-lined (e.g., porcelain, glass, or glass-lined), is exempt from the monitoring requirements of 40 CFR 63.174(a) and 40 CFR 63.174(c). [40 CFR 63.174(h)(1)]

(ii) An inaccessible connector is one that is:

(A) Buried [40 CFR 63.174(h)(1)(i)];

(B) Insulated in a manner that prevents access to the connector by a monitor probe [40 CFR 63.174(h)(1)(ii)];

(C) Obstructed by equipment or piping that prevents access to the connector by a monitor probe [40 CFR 63.174(h)(1)(iii)];

(D) Unable to be reached from a wheeled scissor-lift or hydraulic-type scaffold which would allow access to connectors up to 7.6 meters (25 feet) above the ground [40 CFR 63.174(h)(1)(iv)];

(E) Inaccessible because it would require elevating the monitoring personnel more than 2 meters above a permanent support surface or would require the erection of scaffold [40 CFR 63.174(h)(1)(v)]; or

(F) Not able to be accessed at any time in a safe manner to perform monitoring. Unsafe access includes, but is not limited to, the use of a wheeled scissor-lift on unstable or uneven terrain, the use of a motorized man-lift basket in areas where an ignition potential exists, or access would require near proximity to hazards such as electrical lines, or would risk damage to equipment. [40 CFR 63.174(h)(1)(vi)]

(ii) If any inaccessible or ceramic or ceramic-lined connector is observed by visual, audible, olfactory, or other means to be leaking, the leak shall be repaired as soon as practicable, but no later than 15 calendar days after the leak is detected, except as provided in 40 CFR 63.171 and 40 CFR 63.174(g). [40 CFR 63.174(h)(2)]

(iii) A first attempt at repair shall be made no later than 5 calendar days after the leak is detected. [40 CFR 63.174(h)(3)]

(35) For use in determining the monitoring frequency, as specified in 40 CFR 63.174(b), the percent leaking connectors shall be calculated as specified in 40 CFR 63.174(i)(1) and 40 CFR 63.174(i)(2). [40 CFR 63.174(i)]

(i) For the first monitoring period, use the following equation: [40 CFR 63.174(i)(1)]

$\% C_L = C_L/(C_t + C_C) \times 100$

where:

$\% C_L$= Percent leaking connectors as determined through periodic monitoring required in 40 CFR 63.174(a) and 40 CFR 63.174(b).

C_L= Number of connectors measured at 500 parts per million or greater.

C_t= Total number of monitored connectors in the process unit.

C_C= Optional credit for removed connectors = 0.67 × net (i.e., total removed—total added) number of connectors in organic hazardous air pollutants service removed from the process unit after the compliance date set forth in the applicable subpart for existing process units, and after

the date of initial start-up for new process units. If credits are not taken, then $C_C = 0$.

(ii) For subsequent monitoring periods, use the following equation [40 CFR 63.174(i)(2)]:

$\% C_L = [(C_L - CAN)/(C_t + C_C)] \times 100$

where:

$\% C_L$= Percent leaking connectors as determined through periodic monitoring required in 40 CFR 63.174(a) and 40 CFR 63.174(b).

C_L= Number of connectors, including nonrepairables, measured at 500 parts per million or greater.

C_{AN}= Number of allowable nonrepairable connectors, as determined by monitoring required in 40 CFR 63.174(b)(3) and 40 CFR 63.174(c), not to exceed 2 percent of the total connector population, C_t.

C_t= Total number of monitored connectors, including nonrepairables, in the process unit.

C_C= Optional credit for removed connectors = 0.67 × net number (i.e., total removed—total added) of connectors in organic hazardous air pollutants service removed from the process unit after the compliance date set forth in the applicable subpart for existing process units, and after the date of initial start-up for new process units. If credits are not taken, then $C_C = 0$.

(36) PUMPS, VALVES, CONNECTORS, AND AGITATORS IN HEAVY LIQUID SERVICE; INSTRUMENTATION SYSTEMS; AND PRESSURE RELIEF DEVICES IN LIQUID SERVICE. Pumps, valves, connectors, and agitators in heavy liquid service, pressure relief devices in light liquid or heavy liquid service, and instrumentation systems shall be monitored within 5 calendar days by the method specified in 40 CFR 63.180(b) if evidence of a potential leak to the atmosphere is found by visual, audible, olfactory, or any other detection method. If such a potential leak is repaired as required in 40 CFR 63.169(c) and 40 CFR 63.169(d), it is not necessary to monitor the system for leaks by the method specified in 40 CFR 63.180(b). [40 CFR 63.169(a)]

(37) If an instrument reading of 10,000 parts per million or greater for agitators, 2,000 parts per million or greater for pumps, or 500 parts per million or greater for valves, connectors, instrumentation systems, and pressure relief devices is measured, a leak is detected. [40 CFR 63.169(b)]

(38) REPAIRS.

(i) When a leak is detected, it shall be repaired as soon as practicable, but not later than 15 calendar days after it is detected. [40 CFR 63.169(c)]

(ii) The first attempt at repair shall be made no later than 5 calendar days after each leak is detected. [40 CFR 63.169(c)(2)]

(iii) For equipment identified in 40 CFR 63.169(a) that is not monitored by the method specified in 40 CFR 63.180(b), repaired shall mean that the visual, audible, olfactory, or other indications of a leak to the atmosphere have been eliminated; that no bubbles are observed at potential leak sites during

a leak check using soap solution; or that the system will hold a test pressure. [40 CFR 63.169(c)(3)]

(iv) First attempts at repair include, but are not limited to, the practices described under 40 CFR 63.163(c)(2) and 40 CFR 63 168(g), for pumps and valves, respectively. [40 CFR 63.169(d)]

(b) Testing Requirements

[25 PA Code §139]

(1) Monitoring shall comply with Method 21 of 40 CFR part 60, appendix A. [40 CFR 63.180(b)(1)]

(2) Except as provided for in 40 CFR 63.180(b)(2)(ii), the detection instrument shall meet the performance criteria of Method 21 of 40 CFR part 60, appendix A, except the instrument response factor criteria in Section 3.1.2(a) of Method 21 shall be for the average composition of the process fluid not each individual VOC in the stream. For process streams that contain nitrogen, water, air, or other inerts which are not organic HAP's or VOC's, the average stream response factor may be calculated on an inert-free basis The response factor may be determined at any concentration for which monitoring for leaks will be conducted. [40 CFR 63.180(b)(2)(i)]

(3) If no instrument is available at the plant site that will meet the performance criteria specified in 40 CFR 63.180(b)(2)(i), the instrument readings may be adjusted by multiplying by the average response factor of the process fluid, calculated on an inert-free basis as described in 40 CFR 63.180(b)(2)(i). [40 CFR 63.180(b)(2)(ii)]

(4) The instrument shall be calibrated before use on each day of its use by the procedures specified in Method 21 of 40 CFR part 60, appendix A. [40 CFR 63.180(b)(3)]

(5) Calibration gases shall be:

(i) Zero air (less than 10 parts per million of hydrocarbon in air) [40 CFR 63.180(b)(4)(i)]; and

(ii) Mixtures of methane in air at the concentrations specified in 40 CFR 63.180(b)(4)(ii)(A) through 40 CFR 63.180(b)(4)(ii)(C). A calibration gas other than methane in air may be used if the instrument does not respond to methane or if the instrument does not meet the performance criteria specified in 40 CFR 63.180(b)(2)(i). In such cases, the calibration gas may be a mixture of one or more of the compounds to be measured in air. [40 CFR 63.180(b)(4)(ii)]

(iii) A mixture of methane or other compounds, as applicable, and air at a concentration of approximately, but less than, 10,000 parts per million methane for agitators; 1,000 parts per million for pumps; and 500 parts per million for all other equipment, except as provided in 40 CFR 63.180(b)(5)(iii). [40 CFR 63.180(b)(4)(ii)(C)]

(6) The instrument may be calibrated at a higher methane concentration than the concentration specified for that piece of equipment. The concentration of the calibration gas may exceed the concentration specified as a leak by no more than 2,000 parts per million. If the monitoring instrument's design allows for

multiple calibration scales, then the lower scale shall be calibrated with a calibration gas that is no higher than 2,000 parts per million above the concentration specified as a leak and the highest scale shall be calibrated with a calibration gas that is approximately equal to 10,000 parts per million. If only one scale on an instrument will be used during monitoring, the Permittee need not calibrate the scales that will not be used during that day's monitoring. [40 CFR 63.180(b)(4)(iii)]

(7) When equipment is monitored for compliance as required in 40 CFR 63.164(i), 63.165(a), and 63.172(f) or when equipment subject to a leak definition of 500 ppm is monitored for leaks as required by subpart H of 40 CFR 63, the Permittee may elect to adjust or not to adjust the instrument readings for background. If the Permittee elects to not adjust instrument readings for background, the Permittee shall monitor the equipment according to the procedures specified in 40 CFR 63.180(b)(1) through 40 CFR 63.180(b)(4). In such case, all instrument readings shall be compared directly to the applicable leak definition to determine whether there is a leak. If the Permittee elects to adjust instrument readings for background, the Permittee shall monitor the equipment according to the procedures specified in 40 CFR 63.180(c)(1) through 40 CFR 63.180(c)(4). [40 CFR 63.180(c)]

(i) The requirements of 40 CFR 63.180(b)(1) through 40 CFR 63.180(b)(4) shall apply. [40 CFR 63.180(c)(1)]

(ii) The background level shall be determined, using the same procedures that will be used to determine whether the equipment is leaking. [40 CFR 63.180(c)(2)]

(iii) The instrument probe shall be traversed around all potential leak interfaces as close to the interface as possible as described in Method 21 of 40 CFR part 60, appendix A. [40 CFR 63.180(c)(3)]

(iv) The arithmetic difference between the maximum concentration indicated by the instrument and the background level is compared with 500 parts per million for determining compliance. [40 CFR 63.180(c)(4)]

(8) Each piece of equipment within a process unit that can reasonably be expected to contain equipment in organic HAP service is presumed to be in organic HAP service unless an owner or operator demonstrates that the piece of equipment is not in organic HAP service. For a piece of equipment to be considered not in organic HAP service, it must be determined that the percent organic HAP content can be reasonably expected not to exceed 5 percent by weight on an annual average basis. For purposes of determining the percent organic HAP content of the process fluid that is contained in or contacts equipment, Method 18 of 40 CFR part 60, appendix A shall be used. [40 CFR 63.180(d)(1)]

(9) A Permittee may use good engineering judgment rather than the procedures in 40 CFR 63.180(d)(1) to determine that the percent organic HAP content does not exceed 5 percent by weight. When A Permittee and the EPA Administrator and AMS do not agree on whether a piece of equipment is not in organic HAP

service, however, the procedures in 40 CFR 63.180(d)(1) shall be used to resolve the disagreement. [40 CFR 63.180(d)(2)(i)]

(10) Conversely, the Permittee may determine that the organic HAP content of the process fluid does not exceed 5 percent by weight by, for example, accounting for 98 percent of the content and showing that organic HAP is less than 3 percent. [40 CFR 63.180(d)(2)(ii)]

(11) If a Permittee determines that a piece of equipment is in organic HAP service, the determination can be revised after following the procedures in paragraph 40 CFR 63.180(d)(1), or by documenting that a change in the process or raw materials no longer causes the equipment to be in organic HAP service. [40 CFR 63.180(d)(3)]

(12) Samples used in determining the percent organic HAP content shall be representative of the process fluid that is contained in or contacts the equipment. [40 CFR 63.180(d)(4)]

(c) Monitoring Requirements

[25 PA Code §§127.511 & 139, §§114(a)(3) & 504(b) of Clean Air Act]

The Permittee shall monitor the following:

(1) Monitoring shall be performed when the equipment is in organic HAP service, in use with an acceptable surrogate volatile organic compound which is not an organic HAP, or is in use with any other detectable gas or vapor. [40 CFR 63.180(b)(5)]

(d) Recordkeeping Requirements

[25 PA Code §§127.511, 135.21, 135.5 & 139]

The Permittee shall keep the following records:

(1) The Permittee of more than one process unit may comply with the recordkeeping requirements for these process units in one recordkeeping system if the system identifies each record by process unit and the program being implemented (e.g., quarterly monitoring, quality improvement) for each type of equipment. All records and information required by this section shall be maintained in a manner that can be readily accessed at the plant site. This could include physically locating the records at the plant site or accessing the records from a central location by computer at the plant site. [40 CFR 63.181(a)]

(2) The following information pertaining to all equipment in each process unit subject to the requirements in 40 CFR 63.162 through 63.174 shall be recorded: [40 CFR 63.181(b)]

(i) A list of identification numbers for subject equipment (except connectors exempt from monitoring and recordkeeping identified in 40 CFR 63.174 and instrumentation systems). Connectors need not be individually identified if all connectors in a designated area or length of pipe are identified as a group, and the number of connectors subject is indicated. With respect to connectors, the list shall be complete no later than the completion of the initial survey required by 40 CFR 63.174(b)(1) or 40 CFR 63.174(b)(2). [40 CFR 63.181(b)(1)(i)]

(ii) A schedule by process unit for monitoring connectors subject to the provisions of 40 CFR 63.174(a) and valves subject to the provisions of 40 CFR 63.168(d). [40 CFR 63.181(b)(1)(ii)]

(iii) Physical tagging of the equipment to indicate that it is in organic HAP service is not required. Equipment may be identified on a plant site plan, in log entries, or by other appropriate methods. [40 CFR 63.181(b)(1)(iii)]

(iv) A list of identification numbers for equipment that the Permittee elects to equip with a closed-vent system and control device, under the provisions of 40 CFR 63.163(g), 40 CFR 63.164(h), 40 CFR 63.165(c), or 40 CFR 63.173(f). [40 CFR 63.181(b)(2)(i)]

(v) A list of identification numbers for compressors that the Permittee elects to designate as operating with an instrument reading of less than 500 parts per million above background, under the provisions of 40 CFR 63.164(i). [40 CFR 63.181(b)(2)(ii)]

(vi) Identification of surge control vessels or bottoms receivers that the Permittee elects to equip with a closed-vent system and control device, under the provisions of 40 CFR 63.170. [40 CFR 63.181(b)(2)(iii)]

(vii) A list of identification numbers for pressure relief devices subject to the provisions in 40 CFR 63.165(a). [40 CFR 63.181(b)(3)(i)]

(viii) A list of identification numbers for pressure relief devices equipped with rupture disks, under the provisions of 40 CFR 63.165(d). [40 CFR 63.181(b)(3)(ii)]

(ix) Identification of instrumentation systems subject to 40 CFR 63 Subpart H. Individual components in an instrumentation system need not be identified. [40 CFR 63.181(b)(4)]

(x) Identification of screwed connectors subject to the requirements of 40 CFR 63.174(c)(2). Identification can be by area or grouping as long as the total number within each group or area is recorded. [40 CFR 63.181(b)(5)]

(xi) The following information shall be recorded for each dual mechanical seal system:

(A) Design criteria required in 40 CFR 63.163(e)(6)(i), 63.164(e)(2), and 63.173(d)(6)(i) and an explanation of the design criteria; and [40 CFR 63.181(b)(6)(i)]

(B) Any changes to these criteria and the reasons for the changes. [40 CFR 63.181(b)(6)(ii)]

(xii) The following information pertaining to all pumps subject to the provisions of 40 CFR 63.163(j), valves subject to the provisions of 40 CFR 63.168(h) and 40 CFR 63.168(i), agitators subject to the provisions of 40 CFR 63.173(h) through 40 CFR 63.173(j), and connectors subject to the provisions of 40 CFR 63.174(f) and 40 CFR 63.174(g) shall be recorded: 40 CFR 63.181(b)(7)]

(A) Identification of equipment designated as unsafe to monitor, difficult to monitor, or unsafe to inspect and the plan for monitoring or inspecting this equipment. [40 CFR 63.181(b)(7)(i)]

(B) A list of identification numbers for the equipment that is designated as difficult to monitor, an explanation of why the equipment is difficult to monitor, and the planned schedule for monitoring this equipment. [40 CFR 63.181(b)(7)(ii)]

(C) A list of identification numbers for connectors that are designated as unsafe to repair and an explanation why the connector is unsafe to repair. [40 CFR 63.181(b)(7)(iii)]

(xiii) A list of valves removed from and added to the process unit, as described in 40 CFR 63.168(e)(1), if the net credits for removed valves is expected to be used. [40 CFR 63.181(b)(8)(i)]

(xiv) A list of connectors removed from and added to the process unit, as described in 40 CFR 63.174(i)(1), and documentation of the integrity of the weld for any removed connectors, as required in 40 CFR 63.174(j). This is not required unless the net credits for removed connectors is expected to be used. [40 CFR 63.181(b)(8)(ii)]

(3) For visual inspections of equipment (e.g., 40 CFR 63.163(b)(3), 40 CFR 63.163(e)(4)(i)), the Permittee shall document that the inspection was conducted and the date of the inspection. The Permittee shall maintain records as specified in 40 CFR 63.181(d) for leaking equipment identified in this inspection. These records shall be retained for 5 years. [40 CFR 63.181(c)]

(4) When each leak is detected, the following information shall be recorded and kept for 5 years:

(i) The instrument and the equipment identification number and the operator name, initials, or identification number. [40 CFR 63.181(d)(1)]

(ii) The date the leak was detected and the date of first attempt to repair the leak. [40 CFR 63.181(d)(2)]

(iii) The date of successful repair of the leak. [40 CFR 63.181(d)(3)]

(iv) Maximum instrument reading measured by Method 21 of 40 CFR part 60, appendix A after it is successfully repaired or determined to be nonrepairable. [40 CFR 63.181(d)(4)]

(v) "Repair delayed" and the reason for the delay if a leak is not repaired within 15 calendar days after discovery of the leak. [40 CFR 63.181(d)(5)]

(A) The Permittee may develop a written procedure that identifies the conditions that justify a delay of repair. The written procedures may be included as part of the startup/shutdown/malfunction plan, required by 40 CFR 63.6(e)(3), for the source or may be part of a separate document that is maintained at the plant site. In such cases, reasons for delay of repair may be documented by citing the relevant sections of the written procedure. [40 CFR 63.181(d)(5)(i)]

(B) If delay of repair was caused by depletion of stocked parts, there must be documentation that the spare parts were sufficiently stocked on-site before depletion and the reason for depletion. [40 CFR 63.181(d)(5)(ii)]

(vi) Dates of process unit shutdowns that occur while the equipment is unrepaired. [40 CFR 63.181(d)(6)]

(vii) Identification, either by list, location (area or grouping), or tagging of connectors that have been opened or otherwise had the seal broken since the last monitoring period required in 40 CFR 63.174(b), as described in 40 CFR 63.174(c)(1), unless the Permittee elects to comply with the provisions of 40 CFR 63.174(c)(1)(ii). [40 CFR 63.181(d)(7)(i)]

(viii) The date and results of monitoring as required in 40 CFR 63.174(c). If identification of connectors that have been opened or otherwise had the seal broken is made by location under 40 CFR 63.181(d)(7)(i), then all connectors within the designated location shall be monitored. [40 CFR 63.181(d)(7)(ii)]

(ix) Copies of the periodic reports as specified in 40 CFR 63.182(d), if records are not maintained on a computerized database capable of generating summary reports from the records. [40 CFR 63.181(d)(9)]

(5) The dates and results of each compliance test required for compressors subject to the provisions in 40 CFR 63.164(i) and the dates and results of the monitoring following a pressure release for each pressure relief device subject to the provisions in 40 CFR 63.165(a) and 40 CFR 63.165(b). The results shall include: [40 CFR 63.181(f)]

(i) The background level measured during each compliance test. [40 CFR 63.181(f)(1)]

(ii) The maximum instrument reading measured at each piece of equipment during each compliance test. [40 CFR 63.181(f)(2)]

(6) The Permittee shall maintain records of the information specified in 40 CFR 63.181(g)(1) through 40 CFR 63.181(g)(3) for closed-vent systems and control devices subject to the provisions of 40 CFR 63.172. The records specified in 40 CFR 63.181(g)(1) shall be retained for the life of the equipment. The records specified in 40 CFR 63.181(g)(2) and 40 CFR 63.181(g)(3) shall be retained for 5 years. [40 CFR 63.181(g)]

(i) The design specifications and performance demonstrations specified in 40 CFR 63.181(g)(1)(i) through 40 CFR 63.181(g)(1)(iv). [40 CFR 63.181(g)(1)]

(A) Detailed schematics, design specifications of the control device, and piping and instrumentation diagrams. [40 CFR 63.181(g)(1)(i)]

(B) The dates and descriptions of any changes in the design specifications. [40 CFR 63.181(g)(1)(ii)]

(C) The flare design (i.e., steam-assisted, air-assisted, or non-assisted) and the results of the compliance demonstration required by 40 CFR 63.11(b) of subpart A of 40 CFR 63 Subpart H. [40 CFR 63.181(g)(1)(iii)]

(D) A description of the parameter or parameters monitored, as required in 40 CFR 63.172(e), to ensure that control devices are operated and maintained in conformance with their design and an explanation of why that parameter (or parameters) was selected for the monitoring. [40 CFR 63.181(g)(1)(iv)]

(ii) Records of operation of closed-vent systems and control devices, as specified in 40 CFR 63.181(g)(2)(i) through 40 CFR 63.181(g)(2)(iii). [40 CFR 63.181(g)(2)]

(A) Dates and durations when the closed-vent systems and control devices required in 40 CFR 63.163 through 40 CFR 63.166, and 40 CFR 63.170 are not operated as designed as indicated by the monitored parameters, including periods when a flare pilot light system does not have a flame. [40 CFR 63.181(g)(2)(i)]

(B) Dates and durations during which the monitoring system or monitoring device is inoperative. [40 CFR 63.181(g)(2)(ii)]

(C) Dates and durations of start-ups and shutdowns of control devices required in 40 CFR 63.163 through 40 CFR 63.166, and 40 CFR 63.170. [40 CFR 63.181(g)(2)(iii)]

(iii) Records of inspections of closed-vent systems subject to the provisions of 40 CFR 63.172, as specified CFR 63.181(g)(3)(i) and 40 CFR 63.181(g)(3)(ii). [40 CFR 63.181(g)(3)]

(A) For each inspection conducted in accordance with the provisions of 40 CFR 63.172(f)(1) or 40 CFR 63.172(f)(2) during which no leaks were detected, a record that the inspection was performed, the date of the inspection, and a statement that no leaks were detected. [40 CFR 63.181(g)(3)(i)]

(B) For each inspection conducted in accordance with the provisions of 40 CFR 63.172(f)(1) or 40 CFR 63.172(f)(2) during which leaks were detected, the information specified in 40 CFR 63.181(d) shall be recorded. [40 CFR 63.181(g)(3)(ii)]

(7) Each Permittee of a process unit subject to the requirements of 40 CFR 63.175 and 40 CFR 63.176 shall maintain the records specified in 40 CFR 63.181(h)(1) through 40 CFR 63.181(h)(9) for the period of the quality improvement program for the process unit. [40 CFR 63.181(h)]

(i) For the Permittee who elects to use a reasonable further progress quality improvement program, as specified in 40 CFR 63.175(d): [40 CFR 63.181(h)(1)]

(A) All data required in 40 CFR 63.175(d)(2). [40 CFR 63.181(h)(1)(i)]

(B) The percent leaking valves observed each quarter and the rolling average percent reduction observed in each quarter. [40 CFR 63.181(h)(1)(ii)]

(C) The beginning and ending dates while meeting the requirements of 40 CFR 63.175(d). [40 CFR 63.181(h)(1)(iii)]

(ii) If the Permittee elects to use a quality improvement program of technology review and improvement, as specified in 40 CFR 63.175(e): [40 CFR 63.181(h)(2)]

(A) All data required in 40 CFR 63.175(e)(2). [40 CFR 63.181(h)(2)(i)]

(B) The percent leaking valves observed each quarter. [40 CFR 63.181(h)(2)(ii)]

(C) Documentation of all inspections conducted under the requirements of 40 CFR 63.175(e)(4), and any recommendations for design or specification changes to reduce leak frequency. [40 CFR 63.181(h)(2)(iii)]

(D) The beginning and ending dates while meeting the requirements of 40 CFR 63.175(e). [40 CFR 63.181(h)(2)(iv)]

(iii) If the Permittee is subject to the requirements of the pump quality improvement program as specified in 40 CFR 63.176: [40 CFR 63.181(h)(3)]

(A) All data required in 40 CFR 63.176(d)(2) [40 CFR 63.181(h)(3)(i)].

(B) The rolling average percent leaking pumps [40 CFR 63.181(h)(3)(ii)].

(C) Documentation of all inspections conducted under the requirements of 40 CFR 63.176(d)(4), and any recommendations for design or specification changes to reduce leak frequency. [40 CFR 63.181(h)(3)(iii)]

(D) The beginning and ending dates while meeting the requirements of 40 CFR 63.176(d). [40 CFR 63.181(h)(3)(iv)]

(iv) If a leak is not repaired within 15 calendar days after discovery of the leak, the reason for the delay and the expected date of successful repair. [40 CFR 63.181(h)(4)]

(v) Records of all analyses required in 40 CFR 63.175(e) and 40 CFR 63.176(d). The records will include the following: [40 CFR 63.181(h)(5)]

(A) A list identifying areas associated with poorer than average performance and the associated service characteristics of the stream, the operating conditions and maintenance practices. [40 CFR 63.181(h)(5)(i)]

(B) The reasons for rejecting specific candidate superior emission performing valve or pump technology from performance trials. [40 CFR 63.181(h)(5)(ii)]

(C) The list of candidate superior emission performing valve or pump technologies, and documentation of the performance trial program items required under 40 CFR 63.175(e)(6)(iii) and 63.176(d)(6)(iii). [40 CFR 63.181(h)(5)(iii)]

(D) The beginning date and duration of performance trials of each candidate superior emission performing technology. [40 CFR 63.181(h)(5)(iv)]

(vi) All records documenting the quality assurance program for valves or pumps as specified in 40 CFR 63.175(e)(7) and 63.176(d)(7). [40 CFR 63.181(h)(6)]

(vii) Records indicating that all valves or pumps replaced or modified during the period of the quality improvement program are in compliance with the quality assurance requirements in 40 CFR 63.175(e)(7) and 40 CFR 63.176(d)(7). [40 CFR 63.181(h)(7)]

(viii) Records documenting compliance with the 20 percent or greater annual replacement rate for pumps as specified in 40 CFR 63.176(d)(8). [40 CFR 63.181(h)(8)]

(ix) Information and data to show the corporation has fewer than 100 employees, including employees providing professional and technical contracted services. [40 CFR 63.181(h)(9)]

(8) The Permittee shall comply with the requirements of either 40 CFR 63.181(i)(1) or 40 CFR 63.181(i)(2), as provided in 40 CFR 63.181(i)(3). [40 CFR 63.181(i)]

(i) Retain information, data, and analyses used to determine that a piece of equipment is in heavy liquid service. [40 CFR 63.181(i)(1)]

(ii) When requested by the EPA Administrator and AMS, demonstrate that the piece of equipment or process is in heavy liquid service. [40 CFR 63.181(i)(2)]

(iii) A determination or demonstration that a piece of equipment or process is in heavy liquid service shall include an analysis or demonstration that the process fluids do not meet the definition of "in light liquid service." Examples of information that could document this include, but are not limited to, records of chemicals purchased for the process, analyses of process stream composition, engineering calculations, or process knowledge. [40 CFR 63.181(i)(3)]

(9) Identification, either by list, location (area or group) of equipment in organic HAP service less than 300 hours per year within a process unit under 40 CFR 63.160. [40 CFR 63.181(j)]

(10) If the Permittee chooses to comply with the requirements of 40 CFR 63.179, they shall maintain the following records: [40 CFR 63.181(k)]

(i) Identification of the process unit(s) and the organic HAP's they handle. [40 CFR 63.181(k)(1)]

(ii) A schematic of the process unit, enclosure, and closed-vent system. [40 CFR 63.181(k)(2)]

(iii) A description of the system used to create a negative pressure in the enclosure to ensure that all emissions are routed to the control device. [40 CFR 63.181(k)(3)]

(e) Reporting Requirements

(1) The Permittee shall submit the following periodic reports. [40 CFR 63.182(d)]

(i) A report containing the information in 40 CFR 63.182(d)(2), 40 CFR 63.182(d)(3), and 40 CFR 63.182(d)(4) shall be submitted semiannually. Each semiannual report shall cover the 6-month period following the preceding period. [40 CFR 63.182(d)(1)]

(ii) For each process unit complying with the provisions of 40 CFR 63.163 through 40 CFR 63.174, the summary information listed in 40 CFR 63.182(d)(2)(i) through 40 CFR 63.182(d)(2)(xvi) for each monitoring period during the 6-month period. [40 CFR 63.182(d)(2)]

(A) The number of valves for which leaks were detected as described in 40 CFR 63.168(b), the percent leakers, and the total number of valves monitored; [40 CFR 63.182(d)(2)(i)]

(B) The number of valves for which leaks were not repaired as required in 40 CFR 63.168(f), identifying the number of those that are determined nonrepairable; [40 CFR 63.182(d)(2)(ii)]

(C) The number of pumps for which leaks were detected as described in 40 CFR 63.168(b), the percent leakers, and the total number of pumps monitored; [40 CFR 63.182(d)(2)(iii)]

(D) The number of pumps for which leaks were not repaired as required in 40 CFR 63.168(c); [40 CFR 63.182(d)(2)(iv)]

(E) The number of compressors for which leaks were detected as described in 40 CFR 63.163(c); [40 CFR 63.182(d)(2)(v)]

(F) The number of compressors for which leaks were not repaired as required in 40 CFR 63.164(g); [40 CFR 63.182(d)(2)(vi)]

(G) The number of agitators for which leaks were detected as described in 40 CFR 63.173(a) and 40 CFR 63.173(b); [40 CFR 63.182(d)(2)(vii)]

(H) The number of agitators for which leaks were not repaired as required in 40 CFR 63.173(c); [40 CFR 63.182(d)(2)(viii)]

(I) Th e number of connectors for which leaks were detected as described in 40 CFR 63.174(a), the percent of connectors leaking, and the total number of connectors monitored; [40 CFR 63.182(d)(2)(ix)]

(J) The number of connectors for which leaks were not repaired as required in 40 CFR 63.174(d), identifying the number of those that are determined nonrepairable; [40 CFR 63.182(d)(2)(xi)]

(K) The facts that explain any delay of repairs and, where appropriate, why a process unit shutdown was technically infeasible. [40 CFR 63.182(d)(2)(xiii)]

(L) The results of all monitoring to show compliance with 40 CFR 63.164(i), 40 CFR 63.165(a), and 40 CFR 63.172(f) conducted within the semiannual reporting period. [40 CFR 63.182(d)(2)(xiv)]

(M) If applicable, the initiation of a monthly monitoring program under 40 CFR 63.168(d)(1)(i), or a quality improvement program under either 40 CFR 63.175 or 40 CFR 63.176. [40 CFR 63.182(d)(2)(xv)]

(N) If applicable, notification of a change in connector monitoring alternatives as described in 40 CFR 63.174(c)(1). [40 CFR 63.182(d)(2)(xvi)]

(O) If applicable, the compliance option that has been selected under 40 CFR 63.172(n). [40 CFR 63.182(d)(2)(xvii)]

9. Group 08 - Equipment VOC Leak Components Not Subject to NSPS or NESHAP

[25 Pa Code 129.58, Case-by-case RACT, 25 Pa Code §§129.91-129.95; AMR V Section XIII.A.]

Refer to Summary Table in Section D.7. that summarizes leak detection and repair regulatory applicabilities for individual components within each process unit of the refinery.

(a) Work Practice Standards

(1) The Permittee shall not allow VOC to be emitted in liquid state at the point of discharge into the atmosphere from leaking pumps, valves, compressors, safety pressure relief devices, flanges, gaskets, seals, connections, joints, fitting or other process equipment. [AMR V. Sec. XIII.A.]

(2) Repair leaking refinery components which have a VOC concentration exceeding 10,000 ppm. [25 PA Code §129.58(a)(2)]

(3) Repair and retest the leaking refinery components as soon as possible. Every reasonable effort shall be made to repair each leak within 15 days unless a refinery unit shutdown is required to make the necessary repair. [25 PA Code §129.58(a)(3)]

(4) Identify leaking refinery components which cannot be repaired until the unit is shutdown for turnaround. [25 PA Code §129.58(a)(4)]

(5) Except for safety pressure relief valves and fittings on all valves 1 inch or smaller, do not install or operate a valve at the end of a pipe or line containing VOCs unless the pipe or line is sealed with a second valve, a blind flange, a plug or a cap. The sealing device may be removed only when a sample is being taken or during maintenance operations. [25 PA Code §129.58(b)]

(6) Pipeline valves and pressure relief valves in gaseous VOC service shall be marked in some manner that will be readily obvious to both refinery personnel performing monitoring and AMS. [25 PA Code §129.58(c)]

(7) The Permittee shall use the definitions provided in the Federal New Source Performance Standards (NSPS) to designate streams subject to monitoring in order to comply with 25 PA Code §129.58. The testing and monitoring requirements specified in 25 PA Code §129.58 are applied to sources that handle gas or "light" liquids (meeting the definition of 40 CFR 60.485(e)). Heavy liquid shall be monitored based on visual, audible, or olfactory means of detection. A source is considered to be in VOC service if it contacts or contains a gas or liquid that has at least 10% VOC by weight. [AMS Letter dated May 30, 2000, 25 PA Code §129.58(g)]

(b) Testing Requirements

[25 PA Code §139]

(1) For determining the magnitude of VOC leaks from petroleum refinery equipment, test methods and procedures shall be equivalent to those specified in EPA Method 21 (40 CFR 60, Appendix A) or as specified in 25 PA §139.4(5). Methane and ethane may be excluded from this measurement. If methane and ethane are excluded, the measurement of methane and ethane together shall be reported. [25 PA §139.14(b)(4)]

(c) Monitoring Requirements

[25 PA Code §§127.511 & 139, §§114(a)(3) & 504(b) of Clean Air Act]

The Permittee shall monitor the following:

(1) Check yearly, by the method referenced in Section D.9.(b)(1), pump seals and pipeline valves in light liquid service. [25 PA Code §129.58(d)(1)(i)]

(2) Check quarterly by the method referenced in Section D.9.(b)(1), compressor seals, pipeline valves in gaseous service, and pressure relief valves in gaseous service. [25 Pa Code §129.58(d)(1)(ii)]

(3) Check monthly, by visual methods, all pump seals. [25 PA Code §129.58(d)(1)(iii)]

(4) For light liquid components, check within 24 hours, by the method referenced in Section D.9.(b)(1), a pump seal from which VOC liquids are observed to be dripping. [25 PA Code §129.58(d)(1)(iv)]

(5) Check, by the method referenced in Section D.9.(b)(1), a relief valve within 24 hours after it has vented to the atmosphere. [25 PA Code §129.58(d)(1)(v)]

(6) Check within 72 hours after repair, by the method referenced in Section D.9.(b)(1), a refinery component that was found leaking. [25 PA Code §129.58(d)(1)(vi)]

(7) Upon the detection of a leaking refinery component, affix a weatherproof and readily visible tag, bearing an identification number and the date upon which the leak is located to the leaking refinery component. This tag shall remain in place until the leaking refinery component is repaired. [25 PA Code §129.58(d)(3)]

(d) Recordkeeping Requirements

[25 PA Code §§127.511, 135.21, 135.5 & 139]

The Permittee shall keep the following records:

(1) Maintain a leaking refinery components' monitoring log which shall contain, at a minimum, the following data:

(i) The name of the process unit where the refinery component is located. [25 PA Code §129.58(e)(1)(i)]

(ii) The type of refinery component— for example, valve, seal. [25 PA Code §129.58(e)(1)(ii)]

(iii) The tag number of refinery component. [25 PA Code §129.58(e)(1)(iii)]

(iv) The dates on which the leaking refinery component was discovered and repaired. [25 PA Code §129.58(e)(1)(iv)]

(v) The date and instrument reading of the recheck procedure after a leaking refinery component was repaired. [25 PA Code §129.58(e)(1)(v)]

(vi) A record of the calibration of the monitoring instrument. [25 PA Code §129.58(e)(1)(vi)]

(vii) Those leaks that cannot be repaired until turnaround. [25 PA Code §129.58(e)(1)(vii)]

(viii) The total number of refinery components checked and the total number of refinery components found leaking. [25 PA Code §129.58(e)(1)(viii)]

(e) Reporting Requirements

(1) The Permittee, upon completion of each yearly and quarterly monitoring procedure, shall do the following:

(i) Submit a report to AMS by the last business day of January, April, July, and October that lists all leaking refinery components that were located during the previous calendar quarter but not repaired within 15 days, all leaking refinery components awaiting unit turnaround, the total number of refinery components inspected and the total number of refinery components found leaking. [25 PA Code §129.58(f)(1)(i)]

(ii) Submit a signed statement with the report attesting to the fact that monitoring and repairs were performed as stipulated in the monitoring program. [25 PA Code §129.58(f)(1)(ii)]

(f) Case-by-case RACT, 25 Pa Code §§129.91-129.95

(1) The Permittee shall utilize a fugitive emission LDAR program for all valves, pumps, flanges, and compressors in VOC service. For any source not covered under an existing LDAR program, monitoring shall be conducted on a quarterly basis for equipment in gaseous service and on an annual basis for equipment in liquid service. [Case-by-case RACT, 25 Pa Code §§129.91-95, Section 2K]

10. Group 09 – Cooling Towers

Girard Point equipment P125, P126, P127, and P128. Point Breeze equipment numbered P632, P633, P634, and P635.

(a) Emission Limitations

(1) Particulate Matter emission from each Cooling Tower shall not exceed 40 lbs/hr [AMR II Sec VII]

(b) Work Practice Standards

(1) The Permittee shall not use chromium-based water treatment chemicals in any affected industrial process cooling tower (IPCT). [40 CFR 63.402]

(2) Each cooling tower and equipments shall be installed, maintained, and operated in accordance with manufacturer's specifications.

(c) Testing Requirements

[25 PA Code §139]

(1) No routine sampling, or analysis is required. However, In accordance with section 114 of the Act, AMS can require cooling water sample analysis of an IPCT if there is information to indicate that the IPCT is not in compliance with the requirements of 40 CFR 63.402. The Permittee of an IPCT may demonstrate compliance through recordkeeping in accordance with 40 CFR 63.404(d) in lieu of a water sample analysis. If cooling water sample analysis is required: [40 CFR 63.404]

(i) The water sample analysis shall be conducted in accordance with Method 7196, Chromium, Hexavalent (Colorimetric), contained in the Third Edition of "Test Methods for Evaluating Solid Waste, Physical/Chemical Methods," EPA Publication SW-846, (November 1986) and its Revision I, (December 1987) which are available from the Government Printing Office, Superintendent of Documents, Washington, DC 20402, (202) 783-3238 (document number 955-001-00000-1; or Method 3500-Cr D, Colorimetric Method, contained in the 18th Edition of "Standard Methods for the Examination of Water and Wastewater" (1992), which is available from the American Public Health Association, 1015 15th Street, NW., Washington, DC 20005. [40 CFR 63.404(a)]

(ii) On or after 3 months after the compliance date, a cooling water sample residual hexavalent chromium concentration equal to or less than 0.5 parts per million by weight shall indicate compliance with 40 CFR 63.402. Alternatively, the Permittee may demonstrate compliance through record keeping in accordance with 40 CFR 63.404(c). [40 CFR 63.404(b)]

(d) Monitoring Requirements

[25 PA Code §§127.511 & 139, §§114(a)(3) & 504(b) of Clean Air Act]

The Permittee shall monitor the following:

(1) Perform daily visual inspection of water basins for presence of hydrocarbon.

(2) Utilize an inspection and maintenance/monitoring program for VOC fugitive emissions from cooling towers. [Case-by-case RACT, 25 Pa Code §§129.91-129.95, Section 2J]

(3) For P127, the Permittee who elects to comply with the requirements of 40 CFR 63.104(a) by monitoring the cooling water for the presence of one or more organic hazardous air pollutants or other representative substances whose presence in cooling water indicates a leak shall comply with the requirements specified in 40 CFR 63.104(b)(1) through 40 CFR 63.104(b)(6). The cooling water shall be monitored for total hazardous air pollutants, total volatile organic compounds, total organic carbon, one or more speciated HAP compounds, or other representative substances that would indicate the presence of a leak in the heat exchange system. [40 CFR 63.104(b). This streamlined permit condition assures compliance with 40 CFR 63.104(a)]

(i) The cooling water shall be monitored monthly for the first 6 months and quarterly thereafter to detect leaks. [40 CFR 63.104(b)(1)]

(ii) For recirculating heat exchange systems (cooling tower systems), the monitoring of speciated hazardous air pollutants or total hazardous air pollutants refers to the hazardous air pollutants listed in table 4 subpart F of 40 CFR 63. [40 CFR 63.104(b)(2)(i)]

(iii) For once-through heat exchange systems, the monitoring of speciated hazardous air pollutants or total hazardous air pollutants refers to the hazardous air pollutants listed in table 9 of subpart G of 40 CFR 63. [40 CFR 63.104(b)(2)(ii)]

(iv) The concentration of the monitored substance(s) in the cooling water shall be determined using any EPA-approved method listed in part 136 of subpart F of 40 CFR 63 as long as the method is sensitive to concentrations as low as 10 parts per million and the same method is used for both entrance and exit samples. Alternative methods may be used upon approval by EPA. [40 CFR 63.104(b)(3)]

(v) The samples shall be collected either at the entrance and exit of each heat exchange system or at locations where the cooling water enters and exits each heat exchanger or any combination of heat exchangers. [40 CFR 63.104(b)(4)]

(vi) For samples taken at the entrance and exit of recirculating heat exchange systems, the entrance is the point at which the cooling water leaves the cooling tower prior to being returned to the process equipment and the exit is the point at which the cooling water is introduced to the cooling tower after being used to cool the process fluid. [40 CFR 63.104(b)(4)(i)]

(vii) For samples taken at the entrance and exit of once-through heat exchange systems, the entrance is the point at which the cooling water enters and the exit is the point at which the cooling water exits the plant site or chemical manufacturing process units. [40 CFR 63.104(b)(4)(ii)]

(viii) For samples taken at the entrance and exit of each heat exchanger or any combination of heat exchangers in chemical manufacturing process units, the entrance is the point at which the cooling water enters the individual heat exchanger or group of heat exchangers and the exit is the point at which the cooling water exits the heat exchanger or group of heat exchangers. [40 CFR 63.104(b)(4)(iii)]

(ix) A minimum of three sets of samples shall be taken at each entrance and exit as defined in 40 CFR 63.104(b)(4). The average entrance and exit concentrations shall then be calculated. The concentration shall be corrected for the addition of any makeup water or for any evaporative losses, as applicable. [40 CFR 63.104(b)(5)]

(x) A leak is detected if the exit mean concentration is found to be greater than the entrance mean using a one-sided statistical procedure at the 0.05 level of significance and the amount by which it is greater is at least 1 part per million or 10 percent of the entrance mean, whichever is greater. [40 CFR 63.104(b)(6)]

(e) Recordkeeping Requirements

[25 PA Code §§127.511, 135.21, 135.5 & 139]

The Permittee shall keep the following records:

(1) The Permittee shall keep record of PM emission to demonstrate compliance with Section D.10(a)(1). Emission shall be calculated using AP-42 emission factor.

(2) To demonstrate compliance with 40 CFR 63.402, in lieu of the water sample analysis provided for in 40 CFR 63.404(a), the Permittee of each IPCT may maintain records of water treatment chemical purchases, including invoices and other documentation that includes invoices and other documentation that includes date(s) of purchase or shipment, trade name or other information to identify composition of the product, and quantity of the product. The Permittee shall maintain these records for at least five years onsite. [40 CFR 63.404(c)]

(3) The Permittee shall maintain copies of the initial notification and the notification of compliance status as required by 40 CFR 63.405 for a period of at least 5 years onsite. [40 CFR 63.405]

(4) Record daily visual inspections of cooling tower water basin in Operators Log.

(5) Records of inspection and maintenance/monitoring program for VOC fugitive emissions from cooling towers.

(f) Reporting Requirements

(1) The Permittee shall report any VOC fugitive emissions present from cooling towers during inspections and actions taken in the semiannual report. [25 Pa Code 129.92(a)(7)]

11. Group 10 – Miscellaneous process vents (Group 1) subject to 40 CFR 63 Subparts G and CC

Girard Point equipment numbered P-184 (four associated vents – vacuum unit gases at Unit 137 go to CD-006 [F-1 Heater at Unit 137]; the other three vents go to a process heater or to flare P-117 [CD-012] or flare P-118 [CD-013]), P-181 (six

associated vents that go to either flare P-117 [CD-012] or flare P-118 [CD-013], and P-184 vents that go to either flare P-117 [CD-012] or flare P-118 [CD-013]. Point Breeze equipment numbered P1002.

(a) Work Practice Standards

(1) Vacuum-producing systems shall vent any volatile organic compounds emitted from the condensers, hot wells, or accumulators of the system to a boiler or process heater. The boiler or heater shall have a heat input design capacity greater than 44 MW (150 MMBTU/hr) and shall reduce emissions of organic HAP's by 98 weight-percent or to a concentration of 20 parts per million by volume, on a dry basis, corrected to 3 percent oxygen, whichever is less stringent. The vent stream shall be introduced into the flame zone, or in a location such that the required percent reduction or concentration is achieved. [40 CFR 63.643(a)(2) and 40 CFR 63.643(b), 25 PA Code §129.55(c)]

(b) Non-Applicable Requirements

(1) Any boiler or process heater with a design heat input capacity greater than or equal to 44 megawatt (150 MMBTU/hr) or any boiler or process heater in which all vent streams are introduced into the flame zone is exempt from testing, monitoring, recordkeeping, and reporting. [40 CFR 63.645(d), 40 CFR 63.644(a)(3), Table 10 of 40 CFR 63, Subpart CC]

12. Group 13A – Tanks Subject to 40 CFR 63 Subpart G.

Girard Point Tanks numbered P-001, P005, P017, P018, P021, P022, P023, P024, P025, P029, and Point Breeze Tank numbered P523.

Girard Point Tanks – Refer to Group 14C. This streamlined permit condition assures compliance with 25 Pa Code 129.56 and AMR V. Sec. II. and 40 CFR 63.110(b)(1) for P-005.

Point Breeze Tank – Refer to Group 13C. This streamlined permit condition assures compliance with 25 Pa Code 129.56 and AMR V. Sec. II. and 40 CFR 63.110(b)(1) for P-523.

13. Group 13B – Internal Floating Roof Tanks subject to 40 CFR 63, Subpart CC

Girard Point Tanks numbered P012, P015, P016, P034, and P538. Point Breeze Tanks numbered P545, and P547. [These streamlined permit conditions assure compliance with 25 Pa Code 129.56 and AMR V. Sec. II.]

(a) Work Practice Standards

(1) All tanks are subject to the same requirements as for Group 13C, Section D.14.(a), with the following exceptions,

(i) The following paragraphs do not apply to storage vessels at existing sources subject to subpart CC of 40 CFR 63: 40 CFR 63.119(b)(5), 40 CFR 63.119(b)(6), 40 CFR 63.119(c)(2), and 40 CFR 63.119(d)(2) (gasketed fittings). [40 CFR 63.646(c)]

(ii) When complying with the inspection requirements of 40 CFR 63.120 of subpart G of 40 CFR 63, the Permittee of storage vessels at existing sources are not required to comply with the provisions for gaskets, slotted membranes, and sleeve seals. [40 CFR 63.646(e)]

(iii) If a cover or lid is installed on an opening on a floating roof, the cover or lid shall remain closed except when the cover or lid must be open for access. [40 CFR 63.646(f)(1)]

(iv) Rim space vents are to be set to open only when the floating roof is not floating or when the pressure beneath the rim seal exceeds the manufacturer's recommended setting. [40 CFR 63.646(f)(2)]

(v) Automatic bleeder vents are to be closed at all times when the roof is floating except when the roof is being floated off or is being landed on the roof leg supports. [40 CFR 63.646(f)(3)]

(b) Monitoring Requirements

[25 PA Code §§127.511 & 139, §§114(a)(3) & 504(b) of Clean Air Act]

The Permittee shall monitor the following:

(1) All tanks are subject to the same monitoring requirements as for Group 13C, Section D.14(c), with the exception of references to the fittings excluded per Section D.13(a)(1)(i).

(c) Recordkeeping Requirements

[25 PA Code §§127.511, 135.21, 135.5 & 139]

The Permittee shall keep the following records:

(1) All tanks are subject to the same recordkeeping requirements as for Group 13C, Section D.14(d), with the exception of references to the fittings excluded per Section D.13(a)(1)(i).

(d) Reporting Requirements

(1) All tanks are subject to the same reporting requirements as for Group 13C, Section D.14(e), with the exception of references to the fittings excluded per Section D.13(a)(1)(i).

14. Group 13C – Internal Floating Roof Tanks subject to 40 CFR 60, Subpart Kb

Girard Point Tanks P009, P010, P134, P135, P-136, P137, P159, P160, and P174. Point Breeze equipment numbered P501 and P511. [These streamlined permit conditions assure compliance with 25 Pa Code 129.56 and AMR V. Sec. II.]

(a) Work Practice Standards

(1) The internal floating roof shall rest or float on the liquid surface (but not necessarily in complete contact with it) inside a storage vessel that has a fixed roof. The internal floating roof shall be floating on the liquid surface at all times, except during initial fill and during those intervals when the storage vessel is completely emptied or subsequently emptied and refilled. When the roof is resting on the leg supports, the process of filling, emptying, or refilling shall be continuous and shall be accomplished as rapidly as possible. [40 CFR 60.112b(a)(1)(i)]

(2) Each internal floating roof shall be equipped with one of the following closure devices between the wall of the storage vessel and the edge of the internal floating roof: [40 CFR 60.112b(a)(1)(ii)]

(i) A foam-or liquid-filled seal mounted in contact with the liquid (liquid-mounted seal). A liquid-mounted seal means a foam-or liquid-filled seal mounted in contact with the liquid between the wall of the storage vessel and the floating roof continuously around the circumference of the tank. [40 CFR 60.112b(a)(1)(ii)(A)]

(ii) Two seals mounted one above the other so that each forms a continuous closure that completely covers the space between the wall of the storage vessel and the edge of the internal floating roof. The lower seal may be vapor-mounted, but both must be continuous. [40 CFR 60.112b(a)(1)(ii)(B)]

(iii) A mechanical shoe seal. A mechanical shoe seal is a metal sheet held vertically against the wall of the storage vessel by springs or weighted levers and is connected by braces to the floating roof. A flexible coated fabric (envelope) spans the annular space between the metal sheet and the floating roof. [40 CFR 60.112b(a)(1)(ii)(C)]

(3) Each opening in a noncontact internal floating roof except for automatic bleeder vents (vacuum breaker vents) and the rim space vents is to provide a projection below the liquid surface. [40 CFR 60.112b(a)(1)(iii)]

(4) Each opening in the internal floating roof except for leg sleeves, automatic bleeder vents, rim space vents, column wells, ladder wells, sample wells, and stub drains is to be equipped with a cover or lid which is to be maintained in a closed position at all times (i.e., no visible gap) except when the device is in actual use. The cover or lid shall be equipped with a gasket. Covers on each access hatch and automatic gauge float well shall be bolted except when they are in use. [40 CFR 60.112b(a)(1)(iv)]

(5) Automatic bleeder vents shall be equipped with a gasket and are to be closed at all times when the roof is floating except when the roof is being floated off or is being landed on the roof leg supports. [40 CFR 60.112b(a)(1)(v)]

(6) Rim space vents shall be equipped with a gasket and are to be set to open only when the internal floating roof is not floating or at the manufacturer's recommended setting. [40 CFR 60.112b(a)(1)(vi)]

(7) Each penetration of the internal floating roof for the purpose of sampling shall be a sample well. The sample well shall have a slit fabric cover that covers at least 90 percent of the opening. [40 CFR 60.112b(a)(1)(vii)]

(8) Each penetration of the internal floating roof that allows for passage of a column supporting the fixed roof shall have a flexible fabric sleeve seal or a gasketed sliding cover. [40 CFR 60.112b(a)(1)(viii)]

(9) Each penetration of the internal floating roof that allows for passage of a ladder shall have a gasketed sliding cover. [40 CFR 60.112b(a)(1)(ix)]

(b) Testing Requirements

[25 PA Code §139]

(1) Available data on the storage temperature may be used to determine the maximum true vapor pressure as determined below. [40 CFR 60.116b(e)]

(i) For vessels operated above or below ambient temperatures, the maximum true vapor pressure is calculated based upon the highest expected calendar-month average of the storage temperature. For vessels operated

at ambient temperatures, the maximum true vapor pressure is calculated based upon the maximum local monthly average ambient temperature as reported by the National Weather Service. [40 CFR 60.116b(e)(1)]

(ii) For crude oil or refined petroleum products the vapor pressure may be obtained by the following: [40 CFR 60.116b(e)(2)]

(A) Available data on the Reid vapor pressure and the maximum expected storage temperature based on the highest expected calendar-month average temperature of the stored product may be used to determine the maximum true vapor pressure from nomographs contained in API Bulletin 2517, unless the EPA Administrator and AMS specifically requests that the liquid be sampled, the actual storage temperature determined, and the Reid vapor pressure determined from the sample(s). [40 CFR 60.116b(e)(2)(i)]

(B) The true vapor pressure of each type of crude oil with a Reid vapor pressure less than 13.8 kPa or with physical properties that preclude determination by the recommended method is to be determined from available data and recorded if the estimated maximum true vapor pressure is greater than 3.5 kPa. [40 CFR 60.116b(e)(2)(ii)]

(2) For other liquids, the vapor pressure: [40 CFR 60.116b(e)(3)]

(i) May be obtained from standard reference texts, or [40 CFR 60.116b(e)(3)(i)]

(ii) Determined by ASTM Method D2879-83; or [40 CFR 60.116b(e)(3)(ii)]

(iii) Measured by an appropriate method approved by the EPA Administrator and AMS; or [40 CFR 60.116b(e)(3)(iii)]

(iv) Calculated by an appropriate method approved by the EPA Administrator and AMS. [40 CFR 60.116b(e)(3)(iv)]

(c) Monitoring Requirements

[25 PA Code §§127.511 & 139, §§114(a)(3) & 504(b) of Clean Air Act]

The Permittee shall monitor the following:

(1) Visually inspect the internal floating roof, the primary seal, and the secondary seal (if one is in service), prior to filling the storage vessel with VOL. If there are holes, tears, or other openings in the primary seal, the secondary seal, or the seal fabric or defects in the internal floating roof, or both, the Permittee shall repair the items before filling the storage vessel. [40 CFR 60.113b(a)(1)]

(2) For vessels equipped with a liquid-mounted or mechanical shoe primary seal, visually inspect the internal floating roof and the primary seal or the secondary seal (if one is in service) through manholes and roof hatches on the fixed roof at least once every 12 months after initial fill. If the internal floating roof is not resting on the surface of the VOL inside the storage vessel, or there is liquid accumulated on the roof, or the seal is detached, or there are holes or tears in the seal fabric, the Permittee shall repair the items or empty and remove the storage vessel from service within 45 days. If a failure that is detected during inspections required in this paragraph cannot be repaired within 45 days and if the vessel cannot be emptied within 45 days, a 30-day extension may be requested from the EPA Administrator and AMS in the inspection report

required in 40 CFR 60.115b(a)(3). Such a request for an extension must document that alternate storage capacity is unavailable and specify a schedule of actions the company will take that will assure that the control equipment will be repaired or the vessel will be emptied as soon as possible. [40 CFR 60.113b(a)(2)]

(3) For vessels equipped with a double-seal system: [40 CFR 60.113b(a)(3)]

(i) Visually inspect the vessel as specified in 40 CFR 60.113b(a)(4) at least every 5 years; or [40 CFR 60.113b(a)(3)(i)]

(ii) Visually inspect the vessel as specified in 40 CFR 60.113b(a)(2). [40 CFR 60.113b(a)(3)(ii)]

(4) Visually inspect the internal floating roof, the primary seal, the secondary seal (if one is in service), gaskets, slotted membranes and sleeve seals (if any) each time the storage vessel is emptied and degassed. If the internal floating roof has defects, the primary seal has holes, tears, or other openings in the seal or the seal fabric, or the secondary seal has holes, tears, or other openings in the seal or the seal fabric, or the gaskets no longer close off the liquid surfaces from the atmosphere, or the slotted membrane has more than 10 percent open area, the Permittee shall repair the items as necessary so that none of the conditions specified in this paragraph exist before refilling the storage vessel with VOL. In no event shall inspections conducted in accordance with this provision occur at intervals greater than 10 years in the case of vessels conducting the annual visual inspection as specified in 40 CFR 60.113b(a)(2) and 40 CFR 60.113b(a)(3)(ii) and at intervals no greater than 5 years in the case of vessels specified in 40 CFR 60.113b(a)(3(i). [40 CFR 60.113b(a)(4)]

(d) Recordkeeping Requirements

[25 PA Code §§127.511, 135.21, 135.5 & 139]

The Permittee shall keep the following records:

(1) The Permittee of each storage vessel shall keep readily accessible records showing the dimension of the storage vessel and an analysis showing the capacity of the storage vessel. The record will be kept for the life of the source. Each storage vessel with a design capacity less than 75 m^3 is exempt except for what is required in D.14(d)(2). [40 CFR 60.116b(a) and (b)]

(2) The Permittee of each storage vessel either with a design capacity greater than or equal to 151 m^3 storing a liquid with a maximum true vapor pressure greater than or equal to 3.5 kPa or with a design capacity greater than or equal to 75 m^3 but less than 151 m^3 storing a liquid with a maximum true vapor pressure greater than or equal to 15.0 kPa shall maintain a record of the VOL stored, the period of storage, and the maximum true vapor pressure of that VOL during the respective storage period. [40 CFR 60.116b(c)]

(3) The Permittee of each storage vessel either with a design capacity greater than or equal to 151 m^3 storing a liquid with a maximum true vapor pressure that is normally less than 5.2 kPa or with a design capacity greater than or equal to 75 m^3 but less than 151 m^3 storing a liquid with a maximum true vapor pressure that is normally less than 27.6 kPa shall notify the EPA Administrator and AMS

within 30 days when the maximum true vapor pressure of the liquid exceeds the respective maximum true vapor pressure values for each volume range. [40 CFR 60.116b(d)]

(4) Keep a record of each inspection performed as required by 40 CFR 60.113b (a)(1), (a)(2), (a)(3) and (a)(4). Each record shall identify the storage vessel on which the inspection was performed and shall contain the date the vessel was inspected and the observed condition of each component of the control equipment (seals, internal floating roof, and fittings). [40 CFR 60.115b(a)(2)]

(e) Reporting Requirements

(1) Notify the EPA Administrator and AMS in writing at least 30 days prior to the filling or refilling of each storage vessel to afford the EPA Administrator and AMS the opportunity to have an observer present. If the inspection is not planned and the Permittee could not have known about the inspection 30 days in advance or refilling the tank, the Permittee shall notify the EPA Administrator and AMS at least 7 days prior to the refilling of the storage vessel. Notification shall be made by telephone immediately followed by written documentation demonstrating why the inspection was unplanned. Alternatively, this notification including the written documentation may be made in writing and sent by express mail so that it is received by the EPA Administrator and AMS at least 7 days prior to the refilling. [40 CFR 60.113b(a)(5)]

(2) Furnish the EPA Administrator and AMS with a report that describes the control equipment and certifies that the control equipment meets the specifications of 40 CFR 60.112b(a)(1) and 40 CFR 60.113b(a)(1). This report shall be an attachment to the notification required by 40 CFR 60.7(a)(3). [40 CFR 60.115b(a)(1)]

(3) If any of the conditions described in 40 CFR 60.113b(a)(2) are detected during the annual visual inspection required by 40 CFR 60.113b(a)(2), a report shall be furnished to the EPA Administrator and AMS within 30 days of the inspection. Each report shall identify the storage vessel, the nature of the defects, and the date the storage vessel was emptied or the nature of and date the repair was made. [40 CFR 60.115b(a)(3)]

(4) After each inspection required by 40 CFR 60.113b(a)(3) that finds holes or tears in the seal or seal fabric, or defects in the internal floating roof, or other control equipment defects listed in 40 CFR 60.113b(a)(3)(ii), a report shall be furnished to the EPA Administrator and AMS within 30 days of the inspection. The report shall identify the storage vessel and the reason it did not meet the specifications of 40 CFR 61.112b(a)(1) or 40 CFR 60.113b(a)(3) and list each repair made. [40 CFR 60.115b(a)(4)]

15. Group 14A – External Floating Roof Tanks subject to only local and State Regulations

16. Group 14B – External Floating Roof Tanks subject to 40 CFR 63, Subpart CC

Point Breeze Tanks P502, P503, P504, P507, P508, P509, P512, P513, P514, P521, P525, P526, P527, P537, P540, P541, P542, P546, P579, P587, P588, P594, P599, P600, P601, P602, P603, and P604. [These streamlined permit conditions assure compliance with 25 Pa Code 129.56 and AMR V. Sec. II.]

(a) Work Practice Standards

(1) Same requirements as for Group 14C, Section D.17(a), except that the gasketed fitting requirements do not apply to this group of tanks.

(b) Testing Requirements

[25 PA Code §139]

(1) For vessels operated above or below ambient temperatures, the maximum true vapor pressure is calculated based upon the highest expected calendar-month average of the storage temperature. For vessels operated at ambient temperatures, the maximum true vapor pressure is calculated based upon the maximum local monthly average ambient temperature as reported by the National Weather Service. [40 CFR 60.116b(e)(1)]

(2) For crude oil or refined petroleum products the vapor pressure may be obtained by the following: [40 CFR 60.116b(e)(2)]

(i) Available data on the Reid vapor pressure and the maximum expected storage temperature based on the highest expected calendar-month average temperature of the stored product may be used to determine the maximum true vapor pressure from nomographs contained in API Bulletin 2517, unless the EPA Administrator and AMS specifically requests that the liquid be sampled, the actual storage temperature determined, and the Reid vapor pressure determined from the sample(s). [40 CFR 60.116b(e)(2)(i)]

(ii) The true vapor pressure of each type of crude oil with a Reid vapor pressure less than 13.8 kPa or with physical properties that preclude determination by the recommended method is to be determined from available data and recorded if the estimated maximum true vapor pressure is greater than 3.5 kPa. [40 CFR 60.116b(e)(2)(ii)]

(3) For other liquids, the vapor pressure: [40 CFR 60.116b(e)(3)]

(i) May be obtained from standard reference texts, or [40 CFR 60.116b(e)(3)(i)]

(ii) Determined by ASTM Method D2879-83; or [40 CFR 60.116b(e)(3)(ii)]

(iii) Measured by an appropriate method approved by the EPA Administrator and AMS; or [40 CFR 60.116b(e)(3)(iii)]

(iv) Calculated by an appropriate method approved by the EPA Administrator and AMS. [40 CFR 60.116b(e)(3)(iv)]

(c) Monitoring Requirements

[25 PA Code §§127.511 & 139, §§114(a)(3) & 504(b) of Clean Air Act]

The Permittee shall monitor the following:

(1) Determine the gap areas and maximum gap widths, between the primary seal and the wall of the storage vessel and between the secondary seal and the wall of the storage vessel according to the following frequency. [40 CFR 60.113b(b)(1)]

(i) Measurements of gaps between the tank wall and the primary seal (seal gaps) shall be performed during the hydrostatic testing of the vessel or within 60 days of the initial fill with VOL and at least once every 5 years thereafter. [40 CFR 60.113b(b)(1)(i)]

(ii) Measurements of gaps between the tank wall and the secondary seal shall be performed within 60 days of the initial fill with VOL and at least once per year thereafter. [40 CFR 60.113b(b)(1)(ii)]

(iii) If any source ceases to store VOL for a period of 1 year or more, subsequent introduction of VOL into the vessel shall be considered an initial fill for the purposes of 40 CFR 60.113b(b)(1)(i) and 40 CFR 60.113b(b)(1)(ii). [40 CFR 60.113b(b)(1)(iii)]

(2) Determine gap widths and areas in the primary and secondary seals individually by the following procedures: [40 CFR 60.113b(b)(2)]

(i) Measure seal gaps, if any, at one or more floating roof levels when the roof is floating off the roof leg supports. [40 CFR 60.113b(b)(2)(i)]

(ii) Measure seal gaps around the entire circumference of the tank in each place where a 0.32-cm diameter uniform probe passes freely (without forcing or binding against seal) between the seal and the wall of the storage vessel and measure the circumferential distance of each such location. [40 CFR 60.113b(b)(2)(ii)]

(iii) The total surface area of each gap described in paragraph 40 CFR 60.113b(b)(2)(ii) shall be determined by using probes of various widths to measure accurately the actual distance from the tank wall to the seal and multiplying each such width by its respective circumferential distance. [40 CFR 60.113b(b)(2)(iii)]

(3) Add the gap surface area of each gap location for the primary seal and the secondary seal individually and divide the sum for each seal by the nominal diameter of the tank and compare each ratio to the respective standards in 40 CFR 60.113b(b)(4). [40 CFR 60.113b(b)(3)]

(4) Make necessary repairs or empty the storage vessel within 45 days of identification in any inspection for seals not meeting the requirements listed in 40 CFR 60.113b(b)(4)(i) and 40 CFR 60.113b(b)(4)(ii): [40 CFR 60.113b(b)(4)]

(i) The accumulated area of gaps between the tank wall and the mechanical shoe or liquid-mounted primary seal shall not exceed 212 cm^2 per meter of tank diameter, and the width of any portion of any gap shall not exceed 3.81 cm. [40 CFR 60.113b(b)(4)(i)]

(A) One end of the mechanical shoe is to extend into the stored liquid, and the other end is to extend a minimum vertical distance of 61 cm above the stored liquid surface. [40 CFR 60.113b(b)(4)(i)(A)]

(B) There are to be no holes, tears, or other openings in the shoe, seal fabric, or seal envelope. [40 CFR 60.113b(b)(4)(i)(B)]

(ii) The secondary seal is to meet the following requirements: [40 CFR 60.113b(b)(4)(ii)]

(A) The secondary seal is to be installed above the primary seal so that it completely covers the space between the roof edge and the tank wall except as provided in [40 CFR 60.113b(b)(2)(iii)]. [40 CFR 60.113b(b)(4)(ii)(A)]

(B) The accumulated area of gaps between the tank wall and the secondary seal shall not exceed 21.2 cm^2 per meter of tank diameter, and the width of any portion of any gap shall not exceed 1.27 cm. [40 CFR 60.113b(b)(4)(ii)(B)]

(C) There are to be no holes, tears, or other openings in the seal or seal fabric. [40 CFR 60.113b(b)(4)(ii)(C)]

(iii) If a failure is detected during an inspection and cannot be repaired within 45 days and if the vessel cannot be emptied within 45 days, a 30-day extension may be requested from the EPA Administrator and AMS in the inspection report required in 40 CFR 60.113b(b)(4). Such extension request must include a demonstration of unavailability of alternate storage capacity and a specification of a schedule that will assure that the control equipment will be repaired or the vessel will be emptied as soon as possible. [40 CFR 60.113b(b)(4)(iii)]

(5) Notify the EPA Administrator and AMS 30 days in advance of any gap measurements required by 40 CFR 60.113b(b)(1) to afford the EPA Administrator and AMS the opportunity to have an observer present. [40 CFR 60.113b(b)(5)]

(6) Visually inspect the external floating roof, the primary seal, secondary seal, and fittings each time the vessel is emptied and degassed. [40 CFR 60.113b(b)(6)]

(i) If the external floating roof has defects, the primary seal has holes, tears, or other openings in the seal or the seal fabric, or the secondary seal has holes, tears, or other openings in the seal or the seal fabric, the Permittee shall repair the items as necessary so that none of the conditions specified in this paragraph exist before filling or refilling the storage vessel with VOL. [40 CFR 60.113b(b)(6)(i)]

(7) For all the inspections required by 40 CFR 60.113b(b)(6), the Permittee shall notify the EPA Administrator and AMS in writing at least 30 days prior to the filling or refilling of each storage vessel to afford the EPA Administrator and AMS the opportunity to inspect the storage vessel prior to refilling. If the inspection required by 40 CFR 60.113b(b)(6) is not planned and the Permittee could not have known about the inspection 30 days in advance of refilling the tank, the Permittee shall notify the EPA Administrator and AMS at least 7 days prior to the refilling of the storage vessel. Notification shall be made by telephone immediately followed by written documentation demonstrating why the inspection was unplanned. Alternatively, this notification including the written documentation may be made in writing and sent by express mail so that it is received by the EPA Administrator and AMS at least 7 days prior to the refilling. [40 CFR 60.113b(b)(6)(ii)]

(d) Recordkeeping Requirements

[25 PA Code §§127.511, 135.21, 135.5 & 139]

The Permittee shall keep the following records:

(1) The Permittee shall keep copies of all records required by 40 CFR 60.116b(b), for the life of the source. [40 CFR 60.116b(a)]

(2) The Permittee of each storage vessel shall keep readily accessible records showing the dimension of the storage vessel and an analysis showing the capacity of the storage vessel. Each storage vessel with a design capacity less than 75 m^3 is subject to no provision of this subpart other than those required by this paragraph. The records of this condition shall be kept for the life of the source. [40 CFR 60.116b(a) and (b)]

(3) The Permittee of each storage vessel either with a design capacity greater than or equal to 151 m^3 storing a liquid with a maximum true vapor pressure greater than or equal to 3.5 kPa or with a design capacity greater than or equal to 75 m^3 but less than 151 m^3 storing a liquid with a maximum true vapor pressure greater than or equal to 15.0 kPa shall maintain a record of the VOL stored, the period of storage, and the maximum true vapor pressure of that VOL during the respective storage period. [40 CFR 60.116b(c)]

(4) The Permittee shall keep a record of each gap measurement performed as required by 40 CFR 60.113b(b). Each record shall identify the storage vessel in which the measurement was performed and shall contain:

(i) The date of measurement. [40 CFR 60.115b(b)(3)(i)]

(ii) The raw data obtained in the measurement. [40 CFR 60.115b(b)(3)(ii)]

(iii) The calculations described in 40 CFR 60.113b (b)(2) and (b)(3). [40 CFR 60.115b(b)(3)(iii)]

(e) Reporting Requirements

(1) Within 60 days of performing the seal gap measurements, the Permittee furnish the EPA Administrator and AMS with a report that contains:

(i) The date of measurement. [40 CFR 60.115b(b)(2)(i)]

(ii) The raw data obtained in the measurement. [40 CFR 60.115b(b)(2)(ii)]

(iii) The calculations described in 40 CFR 60.113b (b)(2) and (b)(3). [40 CFR 60.115b(b)(2)(iii)]

(2) Within 60 days of performing the seal gap measurements required by (c)(1) of this section, The Permittee shall furnish the EPA Administrator and AMS with a report that contains:

(i) The date of measurement. [40 CFR 60.115b(b)(2)(i)]

(ii) The raw data obtained in the measurement. [40 CFR 60.115b(b)(2)(ii)]

(iii) The calculations described in 40 CFR 60.113b (b)(2) and (b)(3). [40 CFR 60.115b(b)(2)(iii)]

(3) After each seal gap measurement that detects gaps exceeding the limitations specified by (c)(4) of this section, the Permittee shall submit a report to the EPA Administrator and AMS within 30 days of the inspection. The report will identify the vessel and contain the information specified in paragraph (e)(2) of

this section and the date the vessel was emptied or the repairs made and date of repair. [40 CFR 60.115b(b)(4)]

(4) The Permittee of each storage vessel either with a design capacity greater than or equal to 151 m^3 storing a liquid with a maximum true vapor pressure that is normally less than 5.2 kPa or with a design capacity greater than or equal to 75 m^3 but less than 151 m^3 storing a liquid with a maximum true vapor pressure that is normally less than 27.6 kPa shall notify the EPA Administrator and AMS within 30 days when the maximum true vapor pressure of the liquid exceeds the respective maximum true vapor pressure values for each volume range. [40 CFR 60.116b(d)]

17. Group 14C – External Floating Roof Tanks subject to 40 CFR 60, Subpart Kb (or equivalent).

Girard Point Tanks P006, P155, and P162. Point Breeze Tanks P624, and P627. [These streamlined permit conditions assure compliance with 25 Pa Code 129.56 and AMR V. Sec. II.]

(a) Work Practice Standards

(1) An external floating roof means a pontoon-type or double-deck type cover that rests on the liquid surface in a vessel with no fixed roof. Each external floating roof must meet the following specifications: [40 CFR 60.112b(a)(2)]

(i) Each external floating roof shall be equipped with a closure device between the wall of the storage vessel and the roof edge. The closure device is to consist of two seals, one above the other. The lower seal is referred to as the primary seal, and the upper seal is referred to as the secondary seal. [40 CFR 60.112b(a)(2)(i)]

(A) The primary seal shall be either a mechanical shoe seal or a liquid-mounted seal. Except as provided in 40 CFR 60.113b(b)(4), the seal shall completely cover the annular space between the edge of the floating roof and tank wall. [40 CFR 60.112b(a)(2)(i)(A)]

(B) The secondary seal shall completely cover the annular space between the external floating roof and the wall of the storage vessel in a continuous fashion except as allowed in 40 CFR 60.113b(b)(4). [40 CFR 60.112b(a)(2)(i)(B)]

(ii) Except for automatic bleeder vents and rim space vents, each opening in a noncontact external floating roof shall provide a projection below the liquid surface. Except for automatic bleeder vents, rim space vents, roof drains, and leg sleeves, each opening in the roof is to be equipped with a gasketed cover, seal, or lid that is to be maintained in a closed position at all times (i.e., no visible gap) except when the device is in actual use. Automatic bleeder vents are to be closed at all times when the roof is floating except when the roof is being floated off or is being landed on the roof leg supports. Rim vents are to be set to open when the roof is being floated off the roof legs supports or at the manufacturer's recommended setting. Automatic bleeder vents and rim space vents are to be gasketed. Each emergency roof drain is to be provided with a slotted membrane fabric cover that covers at least 90 percent of the area of the opening. [40 CFR 60.112b(a)(2)(ii)]

(2) The roof shall be floating on the liquid at all times (i.e., off the roof leg supports) except during initial fill until the roof is lifted off leg supports and when the tank is completely emptied and subsequently refilled. The process of filling, emptying, or refilling when the roof is resting on the leg supports shall be continuous and shall be accomplished as rapidly as possible. [40 CFR 60.112b(a)(2)(iii)]

(b) Testing Requirements

[25 PA Code §139]

(1) Same requirements as for Group 14B, Section D.16(b).

(c) Monitoring Requirements

[25 PA Code §§127.511 & 139, §§114(a)(3) & 504(b) of Clean Air Act]

The Permittee shall monitor the following:

(1) Same requirements as for Group 14B, Section D.16(c).

(d) Recordkeeping Requirements

[25 PA Code §§127.511, 135.21, 135.5 & 139]

The Permittee shall keep the following records:

(1) Same requirements as for Group 14B, Section D.16(d).

(e) Reporting Requirements

(1) Same requirements as for Group 14B, Section D.16(e).

18. Group 15A – Group 2 Storage Tanks

Girard Point Tanks P002, P003, P019, P020, P027, P028, P030, P031, P032, P035, P036, P037, P039, P144, P146, P147, P150, P151, P153, P154, P157, P166, P167, P175, P176, P177, P178, and P179. Point Breeze Tanks P515, P516, P518, P519, P520, P529, P530, P534, P535, P551, P563, P565, P567, P571, P574, P575, P576, P577, P578, P580, P582, P584, P585, and P623. [These streamlined permit conditions assure compliance with 25 Pa Code 129.56 and AMR V. Sec. II. for all tanks except for P-149, P-154, P-175, P-176, P-177, P-178, and P-179. These streamlined permit conditions assure compliance with 25 Pa Code 129.57 for Tank P-154.]

(a) Work Practice.

(1) Each tank shall have maximum true vapor pressure of less than 10.4 kPa (1.5 psia) and the annual average true vapor pressure shall be less than 8.3 kPa (1.2 psia).

(b) Testing Requirements

[25 PA Code §139]

(1) The Permittee may use good engineering judgment or test results to determine the stored liquid weight percent total organic HAP for purposes of group determination. Data, assumptions, and procedures used in the determination shall be documented. [40 CFR 63.646(b)(1)]

(2) When the Permittee and the EPA Administrator and AMS do not agree on whether the annual average weight percent organic HAP in the stored liquid is above or below 4 percent for a storage vessel at an existing source, Method 18 of 40 CFR part 60, appendix A shall be used. [40 CFR 63.646(b)(2)]

(c) Recordkeeping Requirements

[25 PA Code §§127.511, 135.21, 135.5 & 139]

The Permittee shall keep the following records:

(1) Keep records of identification of each storage vessel. [40 CFR 63.655(f)(1)(i)(A)]

(2) Keep a record of any data, assumptions, and procedures used to make a Group 2 determination (e.g., the weight percent total organic HAP of the stored liquid.) [40 CFR 63.655(i)(1)(iv)]

(3) Keep readily accessible records showing the dimensions of the storage vessel and an analysis showing the capacity of the storage vessel. This record shall be kept as long as the storage vessel retains Group 2 status and is in operation. [40 CFR 63.123(a)]

(d) Reporting Requirements

(1) Submit the identification of each Group 2 storage vessel each time a Notification of Compliance Status Report is submitted. [40 CFR 63.655(f)(1)(i)(A)]

19. Group 15B – Fixed Roof Tanks subject to 40 CFR 60 Subpart Kb recordkeeping requirements

Girard Point Tanks P158, P171, and P172. [These streamlined permit conditions assure compliance with 25 Pa Code 129.56 and AMR V. Sec. II.]

(a) Work Practice Standards

(1) The Permittee shall not store in each tank any volatile organic liquid with a maximum true vapor pressure equal to or greater than 5.2 kPa as stored. [40 CFR 60.112b(a)]

(b) Recordkeeping Requirements

[25 PA Code §§127.511, 135.21, 135.5 & 139]

The Permittee shall keep the following records:

(1) The Permittee of each storage vessel shall keep readily accessible records showing the dimension of the storage vessel and an analysis showing the capacity of the storage vessel. Each storage vessel with a design capacity less than 75 m^3 is subject to no provision of subpart J of 40 CFR 60 other than those required by this paragraph. [40 CFR 60.116b(b)]

20. Group 17 – Marine loading equipment

Girard Point P130 and CD011 (Flare for P130). Point Breeze equipment numbered P636 .

(a) Work Practice Standards

(1) Equipment leaks associated with the Marine Vapor Collection and Control System (MVCACS) are applicable to the requirements of Group 7, Section D.8. [AMS Permit Approval Letter Dated May 23, 2001, AMS Installation Permit No. 94110]

(2) For P636, the operation of the MVCACS is limited to 2500 barrels per hour. [AMS Permit Approval Letter Dated May 23, 2001, AMS Installation Permit No. 94110]

(3) Vapors from the operation of the MVCACS shall be fed as a primary fuel to the process heaters and boilers in order to achieve a minimum of 98% destruction efficiency. [AMS Permit Dated May 9, 2001, paragraph 2. This streamlined permit condition assures compliance with 29 PA Code §129.81(1)(i) and (2)]

(4) The vapor collection and transport system employed to carry VOCs to the vapor control system shall be maintained and operated so that it prevents the following: [29 PA Code §129.81(1)(ii)]

(i) A reading equal to or greater than 100% of the lower explosive limit (LEL), measured as propane, at 1 inch (2.5 centimeters) from all points on the perimeter of a potential leak source when measured by the method referenced in §139.14 (relating to emissions of VOCs) during loading operations. [29 PA Code §129.81(1)(ii)(A)]

(ii) Avoidable liquid leaks during loading operations. [29 PA Code §129.81(1)(ii)(B)]

(iii) Visually or audibly detectable leaks in the organic liquid cargo vessel's cargo tanks, hatch covers, storage tanks pressure/vacuum relief valves and associated vapor and liquid lines during loading. [29 PA Code §129.81(1)(ii)(C)]

(5) The pressure and vacuum relief valves on the liquid cargo vessel shall be set to release at no less than 0.7 psig (4.8 kilopascals) of pressure or 0.3 psig (2.1 kilopascals) of vacuum or the highest allowable pressure and vacuum as specified in State or local fire codes, the National Fire Prevention Association guidelines or other National consensus standards acceptable to the Department. [29 PA Code §129.81(1)(iii)]

(c) Monitoring Requirements

[25 PA Code §§127.511 & 139, §§114(a)(3) & 504(b) of Clean Air Act]

The Permittee shall monitor the following:

(1) Monitor the temperature of CD011.

(2) All by-pass vent streams shall be equipped with flow indicators and recorders. [AMS Permit Dated May 23, 2001, paragraph 3, AMS Installation Permit No. 94110]

(3) For P636, the Permittee shall provide verification on a monthly basis that operation of the MVCACS is limited to 2500 barrels per hour.

(4) Emission estimation procedures. For sources with emissions less than 10 or 25 tons and sources with emissions of 10 or 25 tons, the Permittee shall calculate an annual estimate of HAP emissions, excluding commodities exempted by 40 CFR 63.560(d), from marine tank vessel loading operations. Emission estimates and emission factors shall be based on test data, or if test data is not available, shall be based on measurement or estimating techniques generally accepted in industry practice for operating conditions at the source. [40 CFR 63.565(l)]

(d) Recordkeeping Requirements

[25 PA Code §§127.511, 135.21, 135.5 & 139]

The Permittee shall keep the following records:

(1) Maintain records of all measurements, calculations, and other documentation used to identify commodities exempted under 40 CFR 63.560(d); [40 CFR 63.567(j)(1)]

(2) Keep readily accessible records of the emission estimation calculations performed in 40 CFR 63.565(l) for 5 years; and [40 CFR 63.567(j)(2)]

(3) The Permittee of marine tank vessel loading operations specified in 40 CFR 63.560(a)(3) shall retain records of the emissions estimates determined in 40 CFR 63.565(l) and records of their actual throughputs by commodity, for 5 years. [40 CFR 63.567(j)(4)]

(4) Continuously record the temperature of CD011.

(5) For P636, the Permittee shall retain a schematic diagram of the affected vent stream, collection system, fuel system, combustion devices and any by-pass system that is associated with the MVCACS on site. [AMS Permit Dated May 23, 2001, paragraph 4]

(6) For P636, the Permittee shall keep records on a monthly basis that operation of the MVCACS is limited to 2500 barrels per hour.

(e) Reporting Requirements

(1) If a source that otherwise would not be subject to the emissions standards subsequently increases its HAP emissions calculated on a 24-month annual average basis after September 19, 1997 or subsequently increases its gasoline or crude loading throughput calculated on a 24-month annual average basis after September 19, 1996 such that the source becomes subject to the emissions standards, such source shall be subject to the notification requirements of 40 CFR 63.9 of subpart A of 40 CFR 63 and the notification requirements of this paragraph. [40 CFR 63.567(b)(1)]

(2) Initial notification for sources with startup before the effective date. The Permittee of a source with initial startup before the effective date shall notify the AMS and EPA in writing that the source is subject to the relevant standard. The notification shall be submitted not later than 365 days after the effective date of the emissions standards and shall provide the following information: [40 CFR 63.567(b)(2)]

(i) The name and address of the Permittee; [40 CFR 63.567(b)(2)(i)]

(ii) The address (i.e., physical location) of the source; [40 CFR 63.567(b)(2)(ii)]

(iii) An identification of this emissions standard that is the basis of the notification and the source's compliance date; [40 CFR 63.567(b)(2)(iii)]

(iv) A brief description of the nature, size, design, and method of operation of the source; [40 CFR 63.567(b)(2)(iv)]

(v) A statement that the source is a major source. [40 CFR 63.567(b)(2)(v)]

(f) Non-Applicable Requirements

(1) The Permittee is not applicable to 25 Pa Code 129.81(4) – Ballasting requirements. The Girard Point Wharf does not receive crude oil or gasoline cargoes.

21. Group 18 – Fluidized Catalytic Cracking Units

Girard Point equipment numbered CD004, and P120. Point Breeze equipment numbered P661 and CD-110 (ESP used by P661).

(a) Emission Limitations

FCCU 868

(1) The Permittee shall not exceed the allowable emission limitations in the following table for P661 - FCCU Unit 868 during normal operation (except during start up and shut down:

		Emission Limitation		
Pollutants	**Concentration**	**Lbs/hr***	**Lbs/day**	**Tons/yr****
Particulate	1 lb/1000 lb coke	25	600	95
SO_2	500 ppmv	358	5880	600
CO	500 ppmv	54	1,300	100
NOx	None	221	5,304	482
HC	N/A	5	123	23

* During normal operation (except during start up and shut down

** Tons per year shall be calculated on the calendar and the daily rolling average

NOTE: [Plan Approval No. 00184 dated March 22, 2003. This streamlined permit condition assures compliance with Case-by-case RACT, 25 Pa Code §§129.91-95, Section 2H, SO2 Operating Permit No. SO2-95-039, NSPS Subpart J, AMS Approval letter dated November 22, 1999 (Item 3)]

(2) The Permittee shall not exceed the allowable emission limitations below for P661 - FCCU Unit 868 at all times including start up and shut down:

(i) Particular matter emissions shall not exceed forty (40) pounds per hour [AMS II, Section VII]

(ii) Sulfur Oxide emissions shall not exceed [Consent Decree Order 05-02866, on March 21, 2006]

(A) 125 ppmvd SO_2 at 0% O_2 on a 365-day rolling average basis

(B) Beginning January 1, 2016, SO2 emission shall not exceed

25 ppmvd @ 0% O2 on 365-day rolling average

50 ppmvd @ 0% O2 on 7-day rolling average

(iii) Carbon Monoxide emissions shall not exceed one percent (1%) by volume. [AMS Plan Approval 00184, dated March 22, 2002]

FCCU 1232

(3) The Permittee shall not exceed limit of the following tables for P120 - FCCU Unit 1232 [AMS Plan Approval No.04322, February 28, 2006, AMS Plan Approval 11353 dated 7/30/12, Consent Decree Order 05-CV-2866]

Concentration and Emissions		
Pollutant	***Long Term***	***Short Term***

Filterable PM/PM_{10} [a]	0.30 lb/1000 lb coke burn-off, 365-day rolling avg [b]	0.50 lb/1000 lb coke burn-off, 3-run avg
Total PM_{10} [a]		0.014 gr/dscf [d] @ 3% O2, 3 run avg
SO_2 (when CO boiler burn fuel gas with H_2S>0.1 gr/dscf		20 ppmdv @ 0% O2, 3 run rolling avg
SO_2	10 ppmdv @ 0% O2, 365-day rolling avg [c,d,f]	18 ppmdv @ 0% O2, 7-day rolling avg [c,f]
CO	100 ppmdv @ 0% O2, 365-day rolling avg [c,d]	500 ppmdv @ 0% O2, 1-hour avg
NOx	10 ppmdv @ 0% O2, 365-day rolling avg [c,e]	30 ppmdv @ 0% O2, 7-day rolling avg [c,e]

Where:

a. Filterable PM/ PM_{10} emissions per coke burn-off limits are for filterable particulate only, as measured by Method 5B.

b. Total PM/ PM_{10} emission limits include filterable particulate, as measured by Method 5B, and condensable particulate, as measured by Method 202.

c. Limits based on a 7-day or 365-day rolling average include only operating days.

d. PM, CO, and SO_2 concentration limits assure compliance with 40 CFR §§ 60.102(a)(1), 60.103, and 60.104(b)(1), 25 Pa Code §§ 123.13(b) & 123.21(b), AMR II Section VII, and AMR VIII Section II.

e. Consent Decree Order 05-CV-2866. Emission during periods of startup, shutdown, or malfunction shall not be used in determining compliance with the 7-day emission limit.

f. Consent Decree Order 05-CV-2866. SO2 emission from the Wet Gas Scrubber (WGS) Emission during periods of startup, shutdown, or malfunction shall not be used in determining compliance with the 7-day emission limit.

Emission Limits			
Pollutants	***Lbs/hr***	***Lbs/day***	***Tons/yr*** [a]
Total PM/ PM_{10} [b]	40.0	960.0	175.2
SO_2	663	15,980	362.72
CO	723	17,369	633.77
NOx	378	9,073	208.28
VOC	1.88	45.12	8.24
H_2SO_4 [c]	37.98	911.52	166.35
NH_3 [d]	4.39	105.36	19.23

Where:

a. NOx, SO_2, and CO tons per year shall be calculated on a rolling 365-day basis. PM/ PM_{10}, VOC, H_2SO_4, and NH_3 tons per year shall be calculated on a rolling 365-day basis based on AMS approved stack test results, daily process, and coke burn rate.

b. Total PM/ PM_{10} emission limits include filterable particulate, as measured by Method 5B, and condensable particulate, as measured by Method 202.

c. H_2SO_4 emission limits based on a nominal flue gas concentration of 7.5 ppmvd @ 0% O_2.

d. NH_3 emission limits based on a nominal flue gas concentration of 5 ppmvd @ 0% O_2.

(4) CD004 (the CO Boiler at the 1232 FCCU) shall not exceed 500 ppmvd SO_2 at any time. [SO2 Operating Permit No. SO2-95-039]

(5) When the Carbon Monoxide (CO) Boiler is not in operation, the Permittee shall operate the FCCU # 1232 with a CO promoter to maintain the CO concentration below 1% by volume of the exhaust gas. [AMR VIII, Section II]

(b) Work Practice Standards

FCCU 868

(1) FCCU Unit 868 shall not process more than 47,500 barrels per day (calculated on a 365-day rolling average basis). The FCCU may not process more than 50,000 barrels in any given day. [Plan Approval No. 00184 dated March 22, 2002 (Item 12)]

(2) For FCCU Unit 868, the Permittee shall follow good combustion practices controlling the level of excess oxygen and CO promoter in the regenerator to minimize NOx emissions from the regenerator. [Case-by-case RACT, 25 Pa Code §§129.91-95, Section 2H]

(3) The daily average ambient air rate to the FCCU Unit 868 regenerator shall not exceed 5.501 MMscfh. Plan Approval No. 00184 dated March 22, 2002]

(4) The FCCU Unit 868 shall be equipped with an automatic controls system to divert the feed when: [AMS Plan Approval 00184, dated March 22, 2002]

(i) The air blower is not in operation,

(ii) The feed rate falls below 18,000 bbls per day, or

(iii) The reactor temperature drops below 850 °F.

(5) The Permittee shall control and monitor the catalyst bed level in FCCU 868 to prevent high catalyst levels and to reduce excessive catalyst losses [AMS Plan Approval 00184, dated March 22, 2002].

(6) The Permittee shall operate the FCCU 868 in accordance with the Quality Improvement Program submitted to AMS on September 15, 2001. [AMS Plan Approval 00184, dated March 22, 2002]

FCCU 1232

(7) The maximum allowable feed rate shall be limited 90,000 barrels per day calculated on a rolling 365-day average and 100,000 barrels per any single day. [AMS Plan Approval No.04322, February 28, 2006]

(8) The CD004 (CO Boiler at the 1232 FCCU) shall only burn refinery fuel gas or natural gas as auxiliary fuel [AMS Plan Approval 04322, dated February 28, 2006]

(9) The CO Boiler shall comply with 40 CFR Part 60, Subpart J. Compliance shall be demonstrated by continuously monitoring that either the concentration of H2S in the fuel gas does not exceed 0.1 gr/dscf or that the concentration of SO2 in the exhaust gas of the scrubber does not exceed 20 ppm (dry basis, zero percent air) on a 3-hour average [40 CFR §§ 60.104(a)(1), 60.105(a)(3)(ii), 60.105(a)(4), AMS Plan Approval 04322, dated 2/28/06, AMS Plan Approval 11353 dated 7/30/12].

(10) The CO Boiler shall comply with the NO_x requirements of 25 Pa Code §§129.201-204. For this regulation, allowable emissions for the period from May 1 through September 30 of each year shall be calculated using an emission rate of 0.17 lbs NO_x/MMBTU. Actual and allowable emission calculations for this regulation shall follow the AMS-approved implementation plan [AMS Plan Approval 04322, dated 2/28/06, AMS Plan Approval 11353 dated 7/30/12].

(11) In accordance with 25 PA Code § 129.55(d), the purging of VOCs during a unit turnaround shall be performed in a manner as to direct the volatile organic vapors to a fuel gas system, flare, or vapor recovery system until the initial pressure in such equipment reaches 19.7 psia [AMS Plan Approval 04322, dated 2/28/06, AMS Plan Approval 11353 dated 7/30/12].

(12) The Permittee shall, for the Wet Gas Scrubber (WGS) system, establish operating ranges for the pressure of water supplied, the flue gas pressure drop and a minimum pH during the performance test [AMS Plan Approval 04322, dated February 28, 2006].

(13) The Unit 1232 FCCU shall be equipped with continuous monitors and recorders for stack flow rate, NOx, SO2, CO, and O2 at the outlet of the WGS for compliance determination with the above limitations. The continuous monitors must conform to USEPA performance specifications in 40 CFR §§ 60.11, 60.13, 60.105, and Part 60 Appendices A, B, and F, and the PA DEP Continuous Source Monitoring Manual Rev. No. 7, September 2003 (PA CSMM). [AMS Plan Approval 04322, dated February 28, 2006].

(15) The Permittee shall prepare and implement an operation, maintenance, and monitoring plan for the 1232 FCCU, control systems, and monitoring systems as per 40 CFR § 63.1574(f) [AMS Plan Approval 04322, dated February 28, 2006].

(16) Ammonia Slip (after SCR but before WGS) shall be calculated and recorded continuously using the following equations: [AMS Plan Approval 04322, dated February 28, 2006].

NH_3 slip, ppmdv = [a-b*(c*d)/1E6]*1E6/b

Where:

a = NH_3 injection rate = (lbs/hr)/(17 lbs/lb-mol)

b = dry flow rate through SCR = (dscf/hr)/(dscf/lb-mol)

c = change in measured NO_x across SCR = (delta ppmdv @ 0% O_2)

d = correction factor to be determined during performance test

(c) Testing Requirements

[25 PA Code §139]

(1) The continuous emission monitors must conform to USEPA performance specifications in 40 CFR Part 60, Appendix B and PA DEP Continuous Sources Monitoring Manual [AMS Plan Approval 00184, dated March 22, 2002]

(2) Upon AMS request, the Permittee shall conduct performance tests on the 1232 and submit a test report to AMS to determine compliance with the emission

standards for Total and Filterable Particulate/PM10, VOC, H2SO4, and Ammonia (outlet of WGS) and to determine emissions of Air Management Regulation VI Heavy Metals. [AMS Plan Approval 11353 dated 7/30/12].

(i) The Permittee shall conduct performance test for Total and Filterable Particulate/PM10, H2SO4, and Ammonia at least once every 12 months and furnish a written report to the results of each test to AMS.

(A) The Permittee may petition AMS to reduce the frequency of H2SO4 and Ammonia testing to every 5 years if sufficient test results show emissions in pounds per hour are less than one-half of the emission limit.

(ii) The Permittee shall conduct performance test every 5 years for VOC, and if requested by AMS for Heavy Metals.

(iii) The test protocol shall be submitted to AMS for approval at least 30 days before the test date. The test report shall be submitted to AMS within 60 days of completing the stack test.

(iv) Testing shall meet the requirements of 40 CFR Part 60, Subpart J and 40 CFR Part 63, Subpart UUU for determining compliance with any limits from these regulations and the PA Stack Testing Manual.

(v) The 1232 FCCU process rate during testing shall be at a minimum of 95% of the highest daily process rate achieved by the unit since re-starting.

(3) The following methods shall be used to demonstrate compliance:

(i) Modified Method 8 shall be used to demonstrate compliance with H2SO4 limits.

(ii) Method 25A shall be used to demonstrate compliance with VOC limits.

(iii) Method 5B and 202 shall be used to demonstrate compliance with PM emission limits

(iv) Method 7E shall be used to demonstrate compliance with the NOx limits.

(v) Method 6C shall be used to demonstrate compliance with the SO2 limits.

(d) Monitoring Requirements

[25 PA Code §§127.511 & 139, §§114(a)(3) & 504(b) of Clean Air Act]

The Permittee shall monitor the following:

FCCU 868

(1) The FCCU Unit 868 shall be equipped with continuous monitors and recorders for stack flow rate, NOx (including NO2), SO_2, CO, and Opacity for compliance determination with the emission limitations [AMS Plan Approval No. 00184, dated March 22, 2002]

(i) The Permittee shall provide substitute data in accordance with procedures in 40 CFR 75.33 for each CEM for annual emission inventory report.

(2) For FCCU 868, the Permittee shall demonstrate compliance with the SO_2 emission limitations through the use of Continuous Emission Monitors (CEM) in accordance with 25 PA Code Chapter 139 procedures. [Permit No. SO2-95-039]

(3) For FCCU 868, the Permittee shall monitor the process rate on a daily basis. [Permit No. SO2-95-039]

FCCU 1232

(4) The Permittee shall monitor the daily feed rate for Unit 1232 FCC (in relation to P120, the FCC regenerator).

(5) The Permittee shall daily monitor FCCU emissions for SO_2, CO, NOx, Particulate/PM_{10}, VOC, H_2SO_4, and Ammonia

(i) SO2 emission shall be monitored on a 7-day rolling average to demonstrate compliance with the SO_2 emission limits. [40 CFR 60.107(b)(4), AMS Plan Approval 11353, dated 7/30/12]

(6) The Permittee shall monitor the daily process rate of the FCCU and ammonia slip [AMS Plan Approval 11353, dated 7/30/12].

(7) The Wet Gas Scrubber (WGS) System shall continuously monitor the pressure of the water supplied at the discharge of the recirculation pumps supplying water to the EDV-6000 Agglo-Filtering modules, and the flue gas pressure drop across the Agglo-Filtering modules in accordance with the alternative monitoring method for opacity approved by EPA and as established during the most recent performance test [AMS Plan Approval 04322, dated February 28, 2006, AMS Plan Approval 11353, dated 7/30/12].

(8) The Permittee shall daily monitor the type of scrubbing liquid and average pH of the scrubbing liquid at the outlet, as established during the performance test [AMS Plan Approval 04322, dated February 28, 2006].

(9) The Permittee shall monitor the following parameter to assure compliance parameter ranges established with the most recent AMS approved stack test. [AMS Plan Approval 11353, dated 7/30/12].

(i) AFM Recycle Pump Pressure shall be monitored and recorded continuously

(ii) WGS Flue Gas Delta P across the AFM section shall be monitored and recorded continuously

(iii) pH of scrubbing liquid shall be monitored and recorded continuously

(iv) Upper Agglo Pressure shall be monitored and recorded manually on a monthly basis.

(10) The Permittee shall install and monitor an instrument to continuously monitor and record stack flow, NOx, SO_2, CO, and O2 in accordance with PA Continuous Source Monitoring Manual. [AMS Plan Approval 11353, dated 7/30/12].

(i) Moisture shall be calculated based on AMS approved levels based on historical data.

(ii) The Permittee shall provide substitute data in accordance with procedures in 40 CFR 75.33 for each CEM for annual emission inventory report.

(11) For CD004 (the CO Boiler at the 1232 FCCU), CO emissions shall be monitored using a continuous emission monitoring system (CEMS).

(12) Continuous emission monitoring system (CEMS) of CD004 (CO Boiler) shall monitor either the concentration of H_2S in the fuel gas does not exceed 0.1 gr/dscf or that the concentration of SO_2 in the exhaust gas of the scrubber

does not exceed 20 ppm (dry basis, zero percent air) on a 3-hour average. [AMS Plan Approval 04322, dated February 23, 2006]

(13) The Permittee shall monitor average coke burn-off rate and hours of operation daily. The average coke burn-off shall be calculated using Equation 1 in 40 CFR 63.1564 (as follows) and hours of operation for the catalyst regenerator. [AMS Plan Approval 11353, dated 7/30/12].

$$R_c = K_1 Q_r(\%\,CO_2 + \%\,CO) + K_2 Q_a - K_3 Q_r\left(\%\,CO_2 + \frac{\%\,CO}{2} + \%O_2\right) + K_3 Q_{oxy}(\%O_{xy})$$

Where:

R_c = Coke burn-off rate, kg/hr (lb/hr)

Q_r = Volumetric flow rate of exhaust gas from catalyst regenerator before adding air or gas streams.

Q_a = Volumetric flow rate of air to catalytic cracking unit catalyst regenerator, as determined form instruments in the catalytic cracking unit control room, dscm/min (dscf/min)

% CO_2 = Carbon dioxide concentration in regenerator exhaust, percent by volume (dry basis)

% CO = Carbon monoxide concentration in regenerator exhaust, percent by volume (dry basis)

% O_2 = Oxygen concentration in regenerator exhaust, percent by volume (dry basis)

K_1 = Material balance and conversion factor, 0.2982 (kg-min)/hr-dscm-%) (0.0186 (lb-min)/(hr-dscf-%))

K_2 = Material balance and conversion factor, 2.088(kg-min)/hr-dscm-%) (0.1303 (lb-min)/(hr-dscf-%))

K_3 = Material balance and conversion factor, 0.0994 (kg-min)/hr-dscm-%) (0.0062 (lb-min)/(hr-dscf-%))

Q_{oxy} = Volumetric flow rate of oxygen-enriched air stream to regenerator, as determined form instruments in the catalytic cracking unit control room, dscm/min (dscf/min)

$\%O_{xy}$ = Oxygen concentration in oxygen-enriched air stream, percent by volume (dry basis)

(14) The Permittee shall monitor and calculate PM emission using Equation 2 in 40 CFR 63.1564

$$E = (K \times C_s \times Q_{sd}) / R_c$$

Where:

E = Emission rate of PM, kg/1,000 kg (lb/1,000 lb) of coke burn-off

C_s = Concentration of PM, g/dscm (lb/dscf);

Q_{sd} = Volumetric flow rate of the catalytic cracking unit catalyst regenerator flue gas as measured by Method 2 in appendix A to 40 CFR Part 60, dscm/hr (dscf/hr);

R_c = Coke burn-off rate, kg coke/hr (1,000 lb coke/hr); and

K = Conversion factor, 1.0 (kg^2 /g)/(1,000 kg) (1,000 lb/(1,000 lb)).

(e) Recordkeeping Requirements

[25 PA Code §§127.511, 135.21, 135.5 & 139]

FCCU 868

(1) For FCCU 868, the Permittee shall record the process rate on a daily basis. [Permit No. SO2-95-039]

(2) The Permittee shall keep continuous emission records for FCCU 868. [Permit No. SO2-95-039, 25 PA Code §139.101(5)]

FCCU 1232

(3) The Permittee shall record the following: [AMS Plan Approval 11353, dated 7/30/12]

(i) The NOx, CO, and SO2 concentrations and the rolling 365-day emission limits shall be calculated based on 0% O2 and stack flow on a part per million (ppm) basis, hourly basis in lbs/hr, daily basis in lbs/day, and a rolling 12-month basis calculated monthly in tons per year (tpy).

(ii) PM/PM-10, H2SO4, VOC, and Ammonia shall keep record of stack test.

(iii) PM/PM-10, H2SO4, VOC, and Ammonia shall be determined based on approved stack test, daily records of average coke burn-off rate for the FCCU using Equation 1 in 40 CFR 63.1564 and the hours of operation for the catalyst regenerator.

(4) The FCCU process rate daily and on a 365-day rolling average, calculated daily [AMS Plan Approval 04322, dated February 28, 2006, AMS Plan Approval 11353, dated 7/30/12].

(5) The Permittee shall record the following parameter to assure compliance parameter ranges established with the most recent AMS approved stack test. [AMS Plan Approval 11353, dated 7/30/12].

(i) AFM Recycle Pump Pressure shall be monitored and record continuously

(ii) WGS Flue Gas Delta P across the ASM section shall be monitored and record continuously

(iii) pH of scrubbing liquid shall be monitored and record continuously

(iv) Upper Agglo Pressure shall be monitored and record manually on a monthly basis.

(6) The Permittee shall record the average coke burn-off rate and hours of operation daily. The average coke burn-off shall be calculated using Equation 1 in 40 CFR 63.1564 and hours of operation for the catalyst regenerator. [AMS Plan Approval 11353, dated 7/30/12].

(7) Ammonia Slip (after SCR but before WGS) shall be continuously recorded calculated in accordance with Section 21(b)(16) [AMS Plan Approval 04322, dated February 28, 2006, AMS Plan Approval 11353, dated 7/30/12].].

(8) The Permittee shall keep records of the CO CEMS for CD04 (CO Boiler).

(f) Reporting Requirements

(1) The Permittee shall submit CEM and production reports for each FCCU to Air Management Services on a quarterly basis. CEM reports must meet the requirements of the PA CSMM.

(2) The Permittee shall submit *(semi-annually)* reports of excess emission in accordance with 40 CFR 60.7(c) determined as follows. [40 CFR 60.105(e)]

(i) Carbon monoxide: All 1-hour periods during which the average CO concentration as measured by the CO continuous monitoring system exceeds 500 ppm.

(ii) All averages shall be determined as the arithmetic average of the applicable 1-hour averages.

(3) The Permittee shall submit a signed statement certifying the accuracy and completeness of the information contained in the report. [40 CFR 107(g)]

(4) For 1232 FCCU, CEM reports must meet the requirements of PA CSMM. The reports must also list any periods when the CO Boiler burns fuel gas with H2S content greater than 0.1 gr/dscf [AMS Plan Approval 04322, dated February 28, 2006]

(5) The Permittee shall keep records and submit reports in accordance with 40 CFR §60.107 and 40 CFR §63, Subpart UUU [AMS Plan Approval 04322, dated February 28, 2006].

(6) Whenever the CO Boiler is not in operation, the Permittee shall forward to AMS on a weekly basis all hourly averages of CO which exceed 1% by volume of exhaust gases. Reports shall be in accordance with the format and procedures contained in the PA DEP Continuous Source Monitoring Manual. [25 Pa. Code §127.511 & AMR I Sec. II]

22. Group 19 - Inter-Refinery Pipeline Equipment

Point Breeze equipment numbered P-664

(a) Emission Limitations

(1) VOC emission increase due to the operation of the Inter-Refinery Pipeline Project shall not exceed 12 tons per rolling 12-month period. Compliance with this limit is assured by maintaining an LDAR program. [AMS Installation Permit No. 94055 dated 5/9/94]

(b) Work Practice Standards

(1) The Permittee shall utilize an LDAR program as described for Group 06, Section D.7.(a).

(c) Monitoring Requirements

[25 PA Code §§127.511 & 139, §§114(a)(3) & 504(b) of Clean Air Act]

The Permittee shall monitor the following:

(1) Same requirements as Group 06, Section D.7(c).

(d) Recordkeeping Requirements

[25 PA Code §§127.511, 135.21, 135.5 & 139]

The Permittee shall keep the following records:

(1) Same requirements as Group 06, Section D.7(d).

23. Group 20 – Alkylation

Girard Point equipment numbered P182 and CD014 (Flare for P182). Point Breeze equipment numbered P662, CD111 (Flare for P662) and CD112 (Flare for P662).

(a) Emission Limitations

(1) VOC emission from the 869 Alkylation plant (P662) shall not exceed 15.44 tons per rolling 12-month period [AMS Plan Approval 03163, dated 2/5/04].

(b) Work Practice Standards

(1) For P182, SHU catalyst treatment gas shall be routed to a flare that conforms with HAP control requirements under 40 CFR 63.11(b). [Plan Approval Nos. 99128 and 99093, paragraph 3, dated January 28, 2000, Plan Approval 03124, dated January 14, 2004]

(2) For P182, Unit 433 alkylate production shall be limited to 30,000 barrels per day on a rolling 365 day average. [AMS Plan Approval Nos. 06050, dated 12/4/06]

(3) For P662, Unit 869 Alkylation plant Olefin feed shall not exceed 7,500 barrels per stream day and 2,737,500 barrels in any 12-month rolling period [AMS Plan Approval 03163, dated 2/5/04].

(4) For 869 Alkylation Unit P662 - Individual Drain System Requirements [40 CFR 60 Subpart QQQ]

(i) The Permittee may elect to construct and operate a completely closed drain system. [40 CFR 60.693-1(a)]

(ii) Each completely closed drain system shall be equipped and operated with a closed vent system and control device (flare). [40 CFR 60.693-1(b)]

(iii) The Permittee must notify the EPA Administrator and AMS in the report required in 40 CFR 60.7 that they have elected to construct and operate a completely closed drain system. [40 CFR 60.693-1(c)]

(iv) If the Permittee elects to comply with the provisions of section 40 CFR 60.693-1, then they do not need to comply with the provisions of 40 CFR 60.692-2 or 40 CFR 60.694. [40 CFR 60.693-1(d)]

(5) For 869 Alkylation Unit P662 - If the alternative is not done as per 40 CFR 60.693-1 then the following standards for individual drain systems shall take place:

(i) Each drain shall be equipped with water seal controls. [40 CFR 60.692-2(a)(1)]

(ii) Each drain in active service shall be checked by visual or physical inspection initially and monthly thereafter for indications of low water levels or other conditions that would reduce the effectiveness of the water seal controls. [40 CFR 60.692-2(a)(2)]

(iii) Except as provided in 40 CFR 60.692-2(a)(4), each drain out of active service shall be checked by visual or physical inspection initially and weekly thereafter for indications of low water levels or other problems that could result in VOC emissions. [40 CFR 60.692-2(a)(3)]

(iv) As an alternative to the requirements in 40 CFR 60.692-2(a)(3), if the Permittee elects to install a tightly sealed cap or plug over a drain that is out of service, inspections shall be conducted initially and semiannually to ensure caps or plugs are in place and properly installed. [40 CFR 60.692-2(a)(4)]

(v) Whenever low water levels or missing or improperly installed caps or plugs are identified, water shall be added or first efforts at repair shall be made as soon as practicable, but not later than 24 hours after detection, except as provided in 40 CFR 60.692-6. [40 CFR 60.692-2(a)(5)]

(vi) Junction boxes shall be equipped with a cover and may have an open vent pipe. The vent pipe shall be at least 90 cm (3 ft) in length and shall not exceed 10.2 cm (4 in) in diameter. [40 CFR 60.692-2(b)(1)]

(vii) Junction box covers shall have a tight seal around the edge and shall be kept in place at all times, except during inspection and maintenance. [40 CFR 60.692-2(b)(2)]

(viii) Junction boxes shall be visually inspected initially and semiannually thereafter to ensure that the cover is in place and to ensure that the cover has a tight seal around the edge. [40 CFR 60.692-2(b)(3)]

(ix) If a broken seal or gap is identified, first effort at repair shall be made as soon as practicable, but not later than 15 calendar days after the broken seal or gap is identified, except as provided in 40 CFR 60.692-6. [40 CFR 60.692-2(b)(4)]

(x) Sewer lines shall not be open to the atmosphere and shall be covered or enclosed in a manner so as to have no visual gaps or cracks in joints, seals, or other emission interfaces. [40 CFR 60.692-2(c)(1)]

(xi) The portion of each unburied sewer line shall be visually inspected initially and semiannually thereafter for indication of cracks, gaps, or other problems that could result in VOC emissions. [40 CFR 60.692-2(c)(2)]

(xii) Whenever cracks, gaps, or other problems are detected, repairs shall be made as soon as practicable, but not later than 15 calendar days after identification, except as provided in 40 CFR 60.692-6. [40 CFR 60.692-2(c)(3)]

(xiii) Except as provided in 40 CFR 60.692-2(e), each modified or reconstructed individual drain system that has a catch basin in the existing configuration prior to May 4, 1987 shall be exempt from the provisions of this section. [40 CFR 60.692-2(d)]

(xiv) Refinery wastewater routed through new process drains and a new first common downstream junction box, either as part of a new individual drain system or an existing individual drain system, shall not be routed through a downstream catch basin. [40 CFR 60.692-2(e)]

(6) For 869 Alkylation Unit P662 - Sewer Lines.

(i) Sewer lines shall not be open to the atmosphere and shall be covered or enclosed in a manner so as to have no visual gaps or cracks in joints, seals, or other emission interfaces. [40 CFR 60.693-1(e)(1)]

(ii) The portion of each unburied sewer line shall be visually inspected initially and semiannually thereafter for indication of cracks, gaps, or other problems that could result in VOC emissions. [40 CFR 60.693-1(e)(2)]

(iii) Whenever cracks, gaps, or other problems are detected, repairs shall be made as soon as practicable, but not later than 15 calendar days after identification, except as provided in 40 CFR 60.692-6 [40 CFR 60.693-1(e)(3)]

(7) For 869 Alkylation Unit P662 - Access doors and other openings

(i) Access doors and other openings shall be visually inspected initially and semiannually thereafter to ensure that there is a tight fit around the edges and to identify other problems that could result in VOC emissions. [40 CFR 60.693-2(a)(5)(i)]

(ii) When a broken seal or gasket on an access door or other opening is identified, it shall be repaired as soon as practicable, but not later than 30 calendar days after it is identified, except as provided in 40 CFR 60.692-6. [40 CFR 60.693-2(a)(5)(ii)]

(iii) The Permittee must notify the EPA Administrator and AMS in the report required by 40 CFR 60.7 that they have elected to construct and operate a floating roof. [40 CFR 60.693-2(b). This permit condition assures compliance with 25 Pa Code 129.55(a)(2)]

(iv) For portions of the oil-water separator tank where it is infeasible to construct and operate a floating roof, such as the skimmer mechanism and weirs, a fixed roof meeting the requirements of 40 CFR 60.692-3(a) shall be installed. [40 CFR 60.693-2(c). This permit condition assures compliance with 25 Pa Code 129.55(a)(1)]

(v) Except as provided in 40 CFR 60.693-2(c), if a Permittee elects to comply with the provisions of 40 CFR 60.693-2, then the Permittee does not need to comply with the provisions of 40 CFR 60.692-3 or 40 CFR 60.694 applicable to the same facilities. [40 CFR 60.693-2(d)]

(vi) At all times, including periods of startup, shutdown, and malfunction, the Permittee shall, to the extent practicable, maintain and operate any affected facility including associated air pollution control equipment in a manner consistent with good air pollution control practice for minimizing emissions. Determination of whether acceptable operating and maintenance procedures are being used will be based on information available to the EPA Administrator and AMS which may include, but is not limited to, monitoring results, opacity observations, review of operating and maintenance procedures, and inspection of the source. [40 CFR 60.11(d)]

(8) Flare requirements. (see Group 03)

(9) Gas components routed to a flare shall go to a flare that conforms to HAP control requirements under 40 CFR §63.11(b)

(c) Monitoring Requirements

[25 PA Code §§127.511 & 139, §§114(a)(3) & 504(b) of Clean Air Act]

The Permittee shall monitor the following:]

(1) The Permittee shall monitor VOC emissions from 869 Alkylation plant.

(2) The Permittee shall monitor daily and rolling 12-month 869 Alkylation plant olefin feed rate calculated monthly.

(3) Monitoring is required for the flare - see Group 3, Section D.4.(d).

(4) The Permittee shall monitor daily that for P182, Unit 433 alkylate production is limited to 30,000 barrels per day on a rolling 365 day average.

(d) Recordkeeping Requirements

[25 PA Code §§127.511, 135.21, 135.5 & 139]

The Permittee shall keep the following records:

(1) For P662, Unite 869, VOC emission calculations to show compliance with Group 20, Section D.23.(a)(1) [AMS Plan Approval 03163, dated 2/5/04].

(2) For P662, Unite 869, Daily Olefin feed rate and rolling 12-month feed rate calculated monthly to demonstrate compliance with Group 20, Section D.23.(b)(3) [AMS Plan Approval 03163, dated 2/5/04].

(3) For P182, Unit 433 alkylate, record the production rate daily and on a 365-day rolling average, calculated daily. [AMS Plan Approval 06050].

(4) For sewer lines subject to 40 CFR 60.693-1(e), the location, date, and corrective action shall be recorded for inspections required by 40 CFR 60.693-1(e) when a problem is identified that could result in VOC emissions. [40 CFR 60.697(b)(3)]

(5) For completely closed drain systems subject to 40 CFR 60.693-1, the location, date, and corrective action shall be recorded for inspections required by 40 CFR 60.692-5(e) during which detectable emissions are measured or a problem is identified that could result in VOC emissions. [40 CFR 60.697(d)]

(6) Delay of Repair

(i) If an emission point cannot be repaired or corrected without a process unit shutdown, the expected date of a successful repair shall be recorded. [40 CFR 60.697(e)(1)]

(ii) The reason for the delay shall be recorded if an emission point or equipment problem is not repaired or corrected in the specified amount of time. [40 CFR 60.697(e)(2)]

(iii) The signature of the Permittee (or designee) whose decision it was that repair could not be effected without refinery or process shutdown shall be recorded. [40 CFR 60.697(e)(3)]

(iv) The date of successful repair or corrective action shall be recorded. [40 CFR 60.697(e)(4)]

(6) A copy of the design specifications for all applicable equipment shall be kept for the life of the source in a readily accessible location. [40 CFR 60.697(f)(1)]

(7) The following information pertaining to the design specifications shall be kept. [40 CFR 60.697(f)(2)]

(i) Detailed schematics, and piping and instrumentation diagrams. [40 CFR 60.697(f)(2)(i)]

(ii) The dates and descriptions of any changes in the design specifications. [40 CFR 60.697(f)(2)(ii)]

(8) If the Permittee elects to install a tightly sealed cap or plug over a drain that is out of active service, the Permittee shall keep for the life of a facility in a readily accessible location, plans or specifications which indicate the location of such drains. [40 CFR 60.697(g)]

(9) The Permittee shall record daily that for P182, Unit 433 alkylate production is limited to 30,000 barrels per day on a rolling 365 day average. [AMS Plan Approval 06050 dated 12/4/2006]

(e) Reporting Requirements

(1) The Permittee shall submit to the EPA Administrator and AMS semiannually a certification that all of the required inspections have been carried out in accordance with the standards. [40 CFR 60.698(b)(1)]

(2) A report that summarizes all inspections when a water seal was dry or otherwise breached, when a drain cap or plug was missing or improperly installed, or when cracks, gaps, or other problems were identified that could result in VOC emissions, including information about the repairs or corrective action taken, shall be submitted semiannually to the EPA Administrator and AMS. [40 CFR 60.698(c)]

(3) If compliance is delayed pursuant to 40 CFR 60.692-7, the notification required under 40 CFR 60.7(a)(4) shall include the estimated date of the next scheduled refinery or process unit shutdown after the date of notification and the reason why compliance with the standards is technically impossible without a refinery or process unit shutdown. [40 CFR 60.698(e)]

(4) The Permittee shall submit an excess emission and continuous monitoring system performance report and or a summary report to AMS and EPA semiannually. [AMS Plan Approval 03163 dated 2/5/04]

(f) Non-Applicable Requirements

(1) This group is not applicable to the oil-water separator requirements of 40 CFR 60.693-2. This group does not have an independent oil-water separator with a floating roof. This unit sewer system drains to the refinery oily water system which complies with 40 CFR 61 Subpart FF (Group 25A, Section D.27).

24. Group 21 – Hydrogen purification equipment

Point Breeze equipment numbered P674.

(a) Work Practice Standards

(1) Same requirements as for Group 06, Section D.7(a). [25 PA Code §129.58 (a)(2)]

(2) Pumps and compressors. All pumps and compressors handling volatile organic compounds with a vapor pressure of greater than 1.5 psi (10.3 kilopascals) at actual conditions shall have mechanical seals. For the purpose of determining vapor pressure, a temperature no greater than 100°F (37.8°C) shall be used. [AMS letter dated 4/14/94; 25 PA Code §129.55(b)]

(b) Testing Requirements

[25 PA Code §139]

(1) Same requirements as for Group 06, Section D.7(b). [25 PA Code §139.14(b)(4)]

(2) Compressors in hydrogen service are exempt from the requirements of 40 CFR 60.592 if the Permittee demonstrates that a compressor is in hydrogen service. [AMS letter dated 4/14/94; 40 CFR 60.593(b)(1)]

(3) Each compressor is presumed not to be in hydrogen service unless the Permittee demonstrates that the piece of equipment is in hydrogen service. For a piece of equipment to be considered in hydrogen service, it must be determined that the percent hydrogen content can be reasonably expected always to exceed 50 percent by volume. For purposes of determining the percent hydrogen content in the process fluid that is contained in or contacts a compressor, procedures that conform to the general method described in

ASTM E-260, E-168, or E-169 shall be used. [AMS letter dated 4/14/94; 40 CFR 60.593(b)(2)]

(4) The Permittee may use engineering judgment rather than procedures in 40 CFR 60.593(b)(2) to demonstrate that the percent content exceeds 50 percent by volume, provided the engineering judgment demonstrates that the content clearly exceeds 50 percent by volume. When the Permittee and the EPA Administrator or AMS do not agree on whether a piece of equipment is in hydrogen service, however, the procedures in paragraph 40 CFR 60.593(b)(2) shall be used to resolve the disagreement. [AMS letter dated 4/14/94; 40 CFR 60.593(b)(3)]

(c) Monitoring Requirements

[25 PA Code §§127.511 & 139, §§114(a)(3) & 504(b) of Clean Air Act]

The Permittee shall monitor the following:

(1) Same requirements as Group 06, Section D.7(c). [25 PA Code §129.58(g]

(2) Monitor equipment with the hydrogen purification unit. [AMS letter dated 4/14/94]

(d) Recordkeeping Requirements

[25 PA Code §§127.511, 135.21, 135.5 & 139]

The Permittee shall keep the following records:

(1) Same as Group 06, Section D.7(d). [25 PA Code §129.58(g)]

(2) Record equipment with the hydrogen purification unit. [AMS letter dated 4/14/94]

(e) Reporting Requirements

(1) Same requirements as for Group 06, Section D.7(e). [25 PA Code §129.58(g)]

(f) Non-Applicable requirements

(1) The Permittee is not applicable to the regulations for wastewater separators in 25 Pa Code 129.55(a)(1) and (a)(2) or vacuum-producing systems in 25 Pa Code 129.55.

25. Group 22 – Degreasing Vats

Girard Point equipment numbered P108 (PB Fab/Machine Shop small parts degreasers)

(a) Emissions

(1) VOC emissions from each part cleaner/cold cleaning machine shall not exceed 2.7 tons per rolling 12-month basis. [Installation Permit No. 12070-12071, dated May 21, 2012].

(b) Work Practice Standards

(1) No solvent containing methylene chloride (CAS No. 75-09-2), perchloroethylene (CAS No. 127-18-4), trichloroethylene (CAS No. 79-01-6), 1,1,1-trichloroethane (CAS No. 71-55-6), carbon tetrachloride (CAS No. 56-23-5) or chloroform (CAS No. 67-66-3), or any combination of these halogenated HAP solvents, in a total concentration greater than 5 percent by weight, may be used as a cleaning and/or drying agent in any degreaser. [Exempt from 40 CFR §63.460]

(2) The Permittee shall not use any solvent subject to the Federal National emissions standards for hazardous air pollutants (NESHAP) for halogenated solvent cleaners under 40 CFR Part 63 (relating to National emissions standards for hazardous air pollutants for source categories). [AMS Installation Permit No. 12070-71, dated May 21, 2012]

(3) Cold cleaning degreasers which have a degreaser opening which is greater than 10 square feet shall be equipped with:

(i) A cover to prevent evaporation of solvent during periods of non-use. [25 PA Code 129.63(a)(1)(i)]

(ii) Equipment for draining cleaned parts. [25 PA Code 129.63(a)(1)(ii)]

(iii) A permanent, conspicuous label summarizing the operating requirements. [25 PA Code 129.63(a)(1)(iii)]

(4) Be operated in accordance with the following requirements:

(i) Do not dispose of waste solvent or transfer it to another party, such that greater than 20% for the waste solvent (by weight) can evaporate into the atmosphere; store waste solvent only in covered containers. [25 PA Code129.63(a)(2)(i)]

(ii) Close degreaser cover whenever not handling parts in the cleaner. [25 PA Code 129.63(a)(2)(ii)]

(iii) Drain cleaned parts for at least 15 seconds or until dripping ceases. [25 PA Code 129.63(a)(2)(iii)]

(5) Each parts cleaner/cold cleaning machine shall: [AMS Installation Permit No. 12070-71, dated May 21, 2012]

(i) Immersion cold cleaning machines shall have a freeboard ratio of 0.50 or greater [25PA Code 129.63(a)(1)]

(ii)Immersion cold cleaning machines and remote reservoir cold cleaning machines shall have a permanent, conspicuous label summarizing the operating requirements in Section D.25(5)(iv). In addition, the label shall include the following discretionary good operating practices: [25PA Code 129.63(a)(2)(i)]

(A) Cleaned parts should be drained at least 15 seconds or until dripping ceases, whichever is longer. Parts having cavities or blind holes shall be tipped or rotated while the part is draining. During the draining, tipping or rotating, the parts should be positioned so that solvent drains directly back to the cold cleaning machine.

(B) When a pump-agitated solvent bath is used, the agitator should be operated to produce a rolling motion of the solvent with no observable splashing of the solvent against the tank walls or the parts being cleaned.

(C) Work area fans should be located and positioned so that they do not blow across the opening of the degreaser unit.

(iii)Be equipped with a cover that shall be closed at all times except during cleaning of parts or the addition or removal of solvent. For remote reservoir cold cleaning machines which drain directly into the solvent storage

reservoir, a perforates drain with a diameter of not more than 6 inches shall constitute an acceptable cover. [25PA Code 129.63(a)(2)(ii)]

(iv) Cold Cleaning Machines shall be operated in accordance with the following procedures: [25PA Code 129.63(a)(3)]

(A) Waste solvent shall be collected and stored in closed containers. The closed containers may contain a device that allows pressure relief, but does not allow liquid solvent to drain from the container.

(B) Flushing of parts using a flexible hose or other flushing device shall be performed only within the cold cleaning machines. The solvent spray shall be a solid fluid stream, not a atomized or shower spray.

(C) Sponges, fabric, wood, leather, paper products and other absorbent materials may not be cleaned in the cold cleaning machine.

(D) Air agitated solvent baths may not be used.

(E) Spills during solvent transfer and use of the cold cleaning machine shall be cleaned up immediately.

(v) The Permittee may not use, sell or offer for sale for use in a cold cleaning machine any solvent with a vapor pressure of 1.0 millimeter of mercury (mm Hg) or greater and containing greater than 5% VOC by weight, measured at 20C (68F) containing VOCs [25PA Code 129.63(a)(4)]

(A) The above condition does not apply: [25PA Code 129.63(a)(7)]

(I) To cold cleaning machines used in extreme cleaning service;

(II) If the owner or operator of the cold cleaning machine demonstrates, and AMS approves in writing, that compliance will result in unsafe operating conditions;

(III) To immersion cold cleaning machines with a freeboard ratio equal to or greater than 0.75.

(vi) If a person sells or offers for sale any solvent containing VOCs for use in a cold cleaning machine, the person shall provide to the purchaser, the following written information: [25PA Code 129.63(a)(7)]

(A) The name and address of the solvent supplier

(B) The type of solvent including the product or vendor identification number

(C) The vapor pressure of the solvent measured in mm Hg at 20C (68F)

(ii) VOC material shall be kept in covered containers when not in use. [AMR V, Sec. XIII.A.2].

(c) Monitoring Requirements

25 PA Code §§127.511 & 139, §§114(a)(3) & 504(b) of Clean Air Act]

The Permittee shall monitor the following:

(1) The concentration of these solvents may be determined using EPA test method 18, material safety data sheets, or engineering calculations. [40 CFR 63.460(a)]

(2) Proper operation of parts cleaner/cold cleaning machine in accordance with manufacturer's recommended operations and maintenance [Installation Permit 12070-71, dated May 21, 2012]

(c) Recordkeeping Requirements

[25 PA Code §§127.511, 135.21, 135.5 & 139]

The Permittee shall keep the following records:

(1) Records of the type and amount of any solvent with a vapor pressure that is greater than 0.3 kilopascals at 20 degrees Celsius that is added to the vats.

(2) Documentation of the concentration of solvents as determined using EPA test method 18, material safety data sheets, or engineering calculations.

(3) For the parts cleaner/cold cleaning machine, Permittee shall keep the following records: [Installation Permit No. 12070-71, dated May 21, 2012]

(i) monthly solvent usage.

(ii) VOC and HAP content of the solvent added to the parts cleaner/cold cleaner machine.

(iii) VOC emission on a monthly and rolling 12-month basis.

(iv) Records shall be kept for a period of 5 years and shall be produced upon request.

26. Group 23 – Butane Isomerization

Girard Point equipment numbered P121

(a) Work Practice Standards

(1) The Permittee shall reduce emissions of TOC (less methane and ethane) by 98 weight-percent, or to a TOC (less methane and ethane) concentration of 20 ppmv, on a dry basis corrected to 3 percent oxygen, whichever is less stringent. The vent stream shall be introduced into the flame zone of the boiler or process heater. [40 CFR 60.662(a)]

(b) Recordkeeping Requirements

[25 PA Code §§127.511, 135.21, 135.5 & 139]

The Permittee shall keep the following records:

(1) The Permittee who seeks to demonstrate compliance with 40 CFR 60.702(a) using a control device must maintain on file a schematic diagram of the affected vent streams, collection system(s), fuel systems, control devices, and bypass systems as part of the initial report. This schematic diagram must be retained for the life of the system. [40 CFR 60.705(s) and USEPA Region III letter to AMS dated March 29, 1994, paragraph 5]

(c) Non-Applicable Requirements

(1) The EPA has determined that the performance testing and monitoring requirements under NSPS Subpart NNN are waived for the Permittee for vent streams that are combusted as primary fuel in boilers and process heaters. All vent streams from distillation columns, reactors, etc. are accumulated and ducted into the facility fuel gas line. [USEPA Region III letter to AMS dated March 29, 1994, paragraph 4]

27. Group 25A – Refining Wastewater

This section applies to Group 1 (as defined in 40 CFR 63.641) wastewater streams associated with petroleum refining process units – all units except Benzene and

Cumene Production Units, Tank Truck Loading and Railcar Unloading (P-180, P-181, P-129 & P-183).

Girard Point equipment numbered P131, CD002 (Carbon Adsorber for P141), P132, and CD003 (Carbon Adsorber for P132). Point Breeze equipment numbered P639 and CD105 (Carbon Adsorber for P639).

Girard Point equipment P114, and CD010 (Carbon Adsorber for P114). Point Breeze equipment numbered P640, CD106 (Carbon Adsorber for P640), P641, CD107 (Carbon Adsorber for P641), and P667.

EFRTs storing stormwater and process water – Girard Point P141, P142, and CD007 (Carbon Adsorber for P141). Point Breeze equipment numbered P624 and P627.

IFRs – Girard Point Tanks P-012, P-134, P-135, P-136, P-137, P-156, P-160, P-174, and Point Breeze Tanks – P-547, P-575

EFRs – Girard Point Tanks P-006, P-155, P-162 and Point Breeze Tanks – P-521, P-546, P-587, P624, P-627

(a) Work Practice Standards

(1) The Permittee shall meet the following standards for each tank [40 CFR 61.343, 40 CFR 61.351(a)(2)]

(i) Internal Floating Roof Tanks

(A) The internal floating roof shall rest or float on the liquid surface (but not necessarily in complete contact with it) inside a storage vessel that has a fixed roof. The internal floating roof shall be floating on the liquid surface at all times, except during initial fill and during those intervals when the storage vessel is completely emptied or subsequently emptied and refilled. When the roof is resting on the leg supports, the process of filling, emptying, or refilling shall be continuous and shall be accomplished as rapidly as possible. [40 CFR 60.112b(a)(1)(i)]

(B) Each internal floating roof shall be equipped with one of the following closure devices between the wall of the storage vessel and the edge of the internal floating roof: [40 CFR 60.112b(a)(1)(ii)]

(1) A foam- or liquid-filled seal mounted in contact with the liquid (liquid-mounted seal). A liquid-mounted seal means a foam- or liquid-filled seal mounted in contact with the liquid between the wall of the storage vessel and the floating roof continuously around the circumference of the tank.

(2) Two seals mounted one above the other so that each forms a continuous closure that completely covers the space between the wall of the storage vessel and the edge of the internal floating roof. The lower seal may be vapor-mounted, but both must be continuous.

(3) A mechanical shoe seal. A mechanical shoe seal is a metal sheet held vertically against the wall of the storage vessel by springs or weighted levers and is connected by braces to the floating roof. A flexible coated fabric (envelope) spans the annular space between the metal sheet and the floating roof.

(C) Each opening in a noncontact internal floating roof except for automatic bleeder vents (vacuum breaker vents) and the rim space vents is to provide a projection below the liquid surface. [40 CFR 60.112b(a)(1)(iii)]

(D) Each opening in the internal floating roof except for leg sleeves, automatic bleeder vents, rim space vents, column wells, ladder wells, sample wells, and stub drains is to be equipped with a cover or lid which is to be maintained in a closed position at all times (i.e., no visible gap) except when the device is in actual use. The cover or lid shall be equipped with a gasket. Covers on each access hatch and automatic gauge float well shall be bolted except when they are in use. [40 CFR 60.112b(a)(1)(iv)]

(E) Automatic bleeder vents shall be equipped with a gasket and are to be closed at all times when the roof is floating except when the roof is being floated off or is being landed on the roof leg supports. [40 CFR 60.112b(a)(1)(v)]

(F) Rim space vents shall be equipped with a gasket and are to be set to open only when the internal floating roof is not floating or at the manufacturer's recommended setting. [40 CFR 60.112b(a)(1)(vi)]

(G) Each penetration of the internal floating roof for the purpose of sampling shall be a sample well. The sample well shall have a slit fabric cover that covers at least 90 percent of the opening. [40 CFR 60.112b(a)(1)(vii)]

(H) Each penetration of the internal floating roof that allows for passage of a column supporting the fixed roof shall have a flexible fabric sleeve seal or a gasketed sliding cover. [40 CFR 60.112b(a)(1)(viii)]

(I) Each penetration of the internal floating roof that allows for passage of a ladder shall have a gasketed sliding cover. [40 CFR 60.112b(a)(1)(xi)]

(ii) External Floating Roof Tanks

(A) Each external floating roof shall be equipped with a closure device between the wall of the storage vessel and the roof edge. The closure device is to consist of two seals, one above the other. The lower seal is referred to as the primary seal, and the upper seal is referred to as the secondary seal. [40 CFR 60.112b(a)(2)(i)]

(1) The primary seal shall be either a mechanical shoe seal or a liquid-mounted seal. The seal shall completely cover the annular space between the edge of the floating roof and tank wall.

(a) The accumulated area of gaps between the tank wall and the mechanical shoe or liquid-mounted primary seal shall not exceed 212 Cm^2 per meter of tank diameter, and the width of any portion of any gap shall not exceed 3.81 cm. [40 CFR 60.113b(b)(4)(i)]

(i) One end of the mechanical shoe is to extend into the stored liquid, and the other end is to extend a minimum vertical distance of 61 cm above the stored liquid surface.

(ii) There are to be no holes, tears, or other openings in the shoe, seal fabric, or seal envelope.

(2) The secondary seal shall completely cover the annular space between the external floating roof and the wall of the storage vessel in a continuous fashion

(a) The secondary seal is to meet the following requirements: [40 CFR 60.113b(b)(4)(ii)]

(i) The secondary seal is to be installed above the primary seal so that it completely covers the space between the roof edge and the tank wall except as provided in paragraph (b)(2)(iii) of this section.

(ii) The accumulated area of gaps between the tank wall and the secondary seal shall not exceed 21.2 cm^2 per meter of tank diameter, and the width of any portion of any gap shall not exceed 1.27 cm.

(iii) There are to be no holes, tears, or other openings in the seal or seal fabric.

(B) Except for automatic bleeder vents and rim space vents, each opening in a noncontact external floating roof shall provide a projection below the liquid surface. Except for automatic bleeder vents, rim space vents, roof drains, and leg sleeves, each opening in the roof is to be equipped with a gasketed cover, seal, or lid that is to be maintained in a closed position at all times (i.e., no visible gap) except when the device is in actual use. Automatic bleeder vents are to be closed at all times when the roof is floating except when the roof is being floated off or is being landed on the roof leg supports. Rim vents are to be set to open when the roof is being floated off the roof legs supports or at the manufacturer's recommended setting. Automatic bleeder vents and rim space vents are to be gasketed. Each emergency roof drain is to be provided with a slotted membrane fabric cover that covers at least 90 percent of the area of the opening. [40 CFR 60.112b(a)(2)(ii)]

(C) The external floating roof shall be floating on the liquid at all times (i.e., off the roof leg supports) except during initial fill until the roof is lifted off leg supports and when the tank is completely emptied and subsequently refilled. The process of filling, emptying, or refilling when the roof is resting on the leg supports shall be continuous and shall be accomplished as rapidly as possible. [40 CFR 60.112b(a)(2)(iii)]

(2) The Permittee shall meet the following standard for containers [40 CFR 61.345]

(i) The Permittee shall install, operate, and maintain a cover on each container used to handle, transfer, or store waste in accordance with the following requirements:

(A) The cover and all openings (e.g., bungs, hatches, and sampling ports) shall be designed to operate with no detectable emissions as indicated by an instrument reading of less than 500 ppmv above background, initially and thereafter at least once per year by the methods specified in 40 CFR§61.355(h)

(B) Each opening shall be maintained in a closed, sealed position (e.g., covered by a lid that is gasketed and latched) at all times that waste is in the container except when it is necessary to use the opening for waste loading, removal, inspection, or sampling.

(ii) When a waste is transferred into a container by pumping, the Permittee shall perform the transfer using a submerged fill pipe. The submerged fill pipe outlet shall extend to within two fill pipe diameters of the bottom of the container while the container is being loaded. During loading of the waste, the cover shall remain in place and all openings shall be maintained in a closed, sealed position except for those openings required for the submerged fill pipe, and those openings required for venting of the container to prevent physical damage or permanent deformation of the container or cover

(iii) Each cover and all openings shall be visually inspected initially and quarterly thereafter to ensure that they are closed and gasketed properly.

(iv) When a broken seal or gasket or other problem is identified, first efforts at repair shall be made as soon as practicable, but not later than 15 calendar days after identification.

(A) Delay of repair will be allowed if the repair is technically impossible without a complete or partial facility or unit shutdown.[40 CFR 61.350]

(B) Repair of such equipment shall occur before the end of the next facility or unit shutdown. [40 CFR 61.350]

(3) The Permittee shall meet the following standard for individual drain system [40 CFR 61.346(b)]

(i) Each drain shall be equipped with water seal controls or a tightly sealed cap or plug.

(ii) Each junction box shall be equipped with a cover and may have a vent pipe. The vent pipe shall be at least 90 cm (3 ft) in length and shall not exceed 10.2 cm (4 in) in diameter.

(A) Junction box covers shall have a tight seal around the edge and shall be kept in place at all times, except during inspection and maintenance.

(B) One of the following methods shall be used to control emissions from the junction box vent pipe to the atmosphere:

(1) Equip the junction box with a system to prevent the flow of organic vapors from the junction box vent pipe to the atmosphere during normal operation. An example of such a system includes use of water seal controls on the junction box. A flow indicator shall be installed, operated, and maintained on each junction box vent pipe to ensure that organic vapors are not vented from the junction box to the atmosphere during normal operation.

(2) Connect the junction box vent pipe to a closed-vent system and control device in accordance with §61.349 of this subpart.

(iii) Each sewer line shall not be open to the atmosphere and shall be covered or enclosed in a manner so as to have no visual gaps or cracks in joints, seals, or other emission interfaces.

(iv) When a broken seal, gap, crack or other problem is identified, first efforts at repair shall be made as soon as practicable, but not later than 15 calendar days after identification.

(A) Delay of repair will be allowed if the repair is technically impossible without a complete or partial facility or unit shutdown.[40 CFR 61.350]

(B) Repair of such equipment shall occur before the end of the next facility or unit shutdown. [40 CFR 61.350]

(4) The Permittee shall meet the following standard for oil-water separators [40 CFR 61.347]

(i) The Permittee shall install, operate, and maintain a fixed-roof and closed-vent system that routes all organic vapors vented from the oil-water separator to a control device.

(ii) The fixed-roof shall meet the following requirements:

(A) The cover and all openings (e.g., access hatches, sampling ports, and gauge wells) shall be designed to operate with no detectable emissions as indicated by an instrument reading of less than 500 ppmv above background, as determined initially and thereafter at least once per year by the methods specified in 40 CFR §61.355(h).

(B) Each opening shall be maintained in a closed, sealed position (e.g., covered by a lid that is gasketed and latched) at all times that waste is in the oil-water separator except when it is necessary to use the opening for waste sampling or removal, or for equipment inspection, maintenance, or repair.

(C) If the cover and closed-vent system operate such that the oil-water separator is maintained at a pressure less than atmospheric pressure, then paragraph Section 27(a)(4)(ii)(B) does not apply to any opening that meets all of the following conditions:

(1) The purpose of the opening is to provide dilution air to reduce the explosion hazard;

(2) The opening is designed to operate with no detectable emissions as indicated by an instrument reading of less than 500 ppmv above background, as determined initially and thereafter at least once per year by the methods specified in 40 CFR§61.355(h); and

(3) The pressure is monitored continuously to ensure that the pressure in the oil-water separator remains below atmospheric pressure.

(5) The Permittee shall meet the following standard for treatment process [40 CFR 61.348]

Rather than treating the waste onsite, the Permittee shall comply with 40 CFR 61.342(c)(1)(i) by transferring the waste offsite to another facility where the waste is treated in accordance with the requirements of 40 CFR 61.342(c)(1)(i). The Permittee shall: [40 CFR 61.342(f)]

(i) Comply with the standards specified in 40 CFR 61.343 through 61.347 for each waste management unit that receives or manages the waste prior to shipment of the waste offsite. [40 CFR 61.342(f)(1)]

(ii) Include with each offsite waste shipment a notice stating that the waste contains benzene which is required to be managed and treated in accordance with the provisions of subpart FF of 40 CFR 61. [40 CFR 61.342(f)(2)]

(6) The Permittee shall meet the following standard for closed-vent systems and control devices [40 CFR 61.348]

(i) The Permittee shall properly design, install, operate, and maintain the closed-vent system and control device in accordance with the following requirements:

(A) The closed-vent system shall:

(1) Be designed to operate with no detectable emissions as indicated by an instrument reading of less than 500 ppmv above background, as determined initially and thereafter at least once per year by the methods specified in 40 CFR §61.355(h).

(2) Vent systems that contain any bypass line that could divert the vent stream away from a control device used to comply with the provisions of this subpart shall install, maintain, and operate according to the manufacturer's specifications a flow indicator that provides a record of vent stream flow away from the control device at least once every 15 minutes.

(a) The flow indicator shall be installed at the entrance to any bypass line that could divert the vent stream away from the control device to the atmosphere.

(b) Where the bypass line valve is secured in the closed position with a car-seal or a lock-and-key type configuration, a flow indicator is not required.

(c) All gauging and sampling devices shall be gas-tight except when gauging or sampling is taking place.

(d) One or more devices which vent directly to the atmosphere may be used on the closed-vent system provided each device remains in a closed, sealed position during normal operations except when the device needs to open to prevent physical damage or permanent deformation of the closed-vent system resulting from malfunction of the unit in accordance with good engineering and safety practices for handling flammable, explosive, or other hazardous materials.

(ii) A vapor recovery system (carbon adsorption system) shall recover or control the organic emissions vented to it with an efficiency of 95 weight percent or greater, or shall recover or control the benzene emissions vented to it with an efficiency of 98 weight percent or greater.

(iii) Each closed-vent system and control device shall be operated at all times when waste is placed in the waste management unit vented to the control device except when maintenance or repair of the waste management unit cannot be completed without a shutdown of the control device.

(iv) The Permittee shall demonstrate that the efficiency of the vapor recovery system (carbon adsorption system) in Section D.27(a)(6)(ii), by using one of the following methods:

(A) Engineering calculations in accordance with requirements specified in 40 CFR§61.356(f); or

(B) Performance tests conducted using the test methods and procedures that meet the requirements specified in 40 CFR §61.355.

(v) The Administrator may request at any time an owner or operator demonstrate that a control device meets Section D.27(a)(6)(ii) by conducting a performance test using the test methods and procedures as required in 40 CFR §61.355.

(vi) Each closed-vent system and control device shall be visually inspected initially and quarterly thereafter. The visual inspection shall include inspection of ductwork and piping and connections to covers and control devices for evidence of visible defects such as holes in ductwork or piping and loose connections.

(vii) If visible defects are observed during an inspection, or if other problems are identified, or if detectable emissions are measured, a first effort to repair the closed-vent system and control device shall be made as soon as practicable but no later than 5 calendar days after detection. Repair shall be completed no later than 15 calendar days after the emissions are detected or the visible defect is observed.

(A) Delay of repair will be allowed if the repair is technically impossible without a complete or partial facility or unit shutdown .[40 CFR 61.350]

(B) Repair of such equipment shall occur before the end of the next facility or unit shutdown. [40 CFR 61.350]

(viii) The owner or operator of a control device that is used to comply with the provisions of this section shall monitor the control device in accordance with 40 CFR§61.354(c).

(b) Testing Requirements

[25 PA Code §139]

(1) The Permittee shall test equipment for compliance with no detectable emissions as required in 40 CFR 61.343 through 40 CFR 61.347, and 40 CFR 61.349 in accordance with the following requirements: [40 CFR 61.355(h)]

(i) Monitoring shall comply with method 21 from appendix A of 40 CFR part 60. [40 CFR 61.355(h)(1)]

(ii) The detection instrument shall meet the performance criteria of method 21. [40 CFR 61.355(h)(2)]

(iii) The instrument shall be calibrated before use on each day of its use by the procedures specified in method 21. [40 CFR 61.355(h)(3)]

(iv) Calibration gases shall be: [40 CFR 61.355(h)(4)]

(A) Zero air (less than 10 ppm of hydrocarbon in air); and [40 CFR 61.355(h)(4)(i)]

(B) A mixture of methane or n-hexane and air at a concentration of approximately, but less than, 10,000 ppm methane or n-hexane. [40 CFR 61.355(h)(4)(ii)]

(v) The background level shall be determined as set forth in method 21. [40 CFR 61.355(h)(5)]

(vi) The instrument probe shall be traversed around all potential leak interfaces as close as possible to the interface described in method 21. [40 CFR 61.355(h)(6)]

(vii) The arithmetic difference between the maximum concentration indicated by the instrument and the background level is compared to 500 ppm for determining compliance. [40 CFR 61.355(h)(7)]

(2) The Permittee shall determine the annual waste quantity at the point of waste generation by one of the methods provided below: [40 CFR 61.355(b)]

(i) Select the highest annual quantity of waste managed from historical records representing the most recent 5 years of operation or, if the facility has been in service for less than 5 years but at least 1 year, from historical records representing the total operating life of the facility; [40 CFR 61.355(b)(5)]

(ii) Use the maximum design capacity of the waste management unit; or [40 CFR 61.355(b)(6)]

(iii) Use measurements that are representative of maximum waste generation rates. [40 CFR 61.355(b)(7)]

(3) Knowledge of the waste. The Permittee shall provide sufficient information to document the flow-weighted annual average benzene concentration of each waste stream. Examples of information that could constitute knowledge include material balances, records of chemicals purchases, or previous test results provided the results are still relevant to the current waste stream conditions. If test data are used, then the Permittee shall provide documentation describing the testing protocol and the means by which sampling variability and analytical variability were accounted for in the determination of the flow-weighted annual average benzene concentration for the waste stream. When the Permittee and the EPA Administrator and AMS do not agree on determinations of the flow-weighted annual average benzene concentration based on knowledge of the waste, the procedures under 40 CFR 61.355(c)(3) shall be used to resolve the disagreement. [40 CFR 61.355(c)(2)]

(4) The Permittee using performance tests to demonstrate compliance of a treatment process with 40 CFR 61.348(a)(1)(i) shall measure the flow-weighted annual average benzene concentration of the waste stream exiting the treatment process by collecting and analyzing a minimum of three representative samples of the waste stream using the procedures in 40 CFR 61.355(c)(3). The test shall be conducted under conditions that exist when the treatment process is operating at the highest inlet waste stream flow rate and benzene content expected to occur. Operations during periods of startup, shutdown, and malfunction shall not constitute representative conditions for the purpose of a test. The owner or operator shall record all process information as

is necessary to document the operating conditions during the test. [40 CFR 61.355(d)]

(5) The Permittee using performance tests to demonstrate compliance of a treatment process with 40 CFR 61.348(a)(1)(ii) shall determine the percent reduction of benzene in the waste stream on a mass basis by the following procedure: [40 CFR 61.355(e)]

(i) The test shall be conducted under conditions that exist when the treatment process is operating at the highest inlet waste stream flow rate and benzene content expected to occur. Operations during periods of startup, shutdown, and malfunction shall not constitute representative conditions for the purpose of a test. The owner or operator shall record all process information as is necessary to document the operating conditions during the test. [40 CFR 61.355(e)(1)]

(ii) All testing equipment shall be prepared and installed as specified in the appropriate test methods. [40 CFR 61.355(e)(2)]

(iii) The mass flow rate of benzene entering the treatment process (Eb) shall be determined by computing the product of the flow rate of the waste stream entering the treatment process, as determined by the inlet flow meter, and the benzene concentration of the waste stream, as determined using the sampling and analytical procedures specified in 40 CFR 61.355(c)(2) or (c)(3). Three grab samples of the waste shall be taken at equally spaced time intervals over a 1-hour period. Each 1-hour period constitutes a run, and the performance test shall consist of a minimum of 3 runs conducted over a 3-hour period. The mass flow rate of benzene entering the treatment process is calculated as follows: [40 CFR 61.355(e)(3)]

$E_b = K / (n * 10^6) [V_i C_i]$

Where:

E_b = Mass flow rate of benzene entering the treatment process, kg/hr (lb/hr).

K = Density of the waste stream, kg/m^3 (lb/ft^3).

V_i = Average volume flow rate of waste entering the treatment process during each run i, m^3/hr (ft^3/hr).

C_i = Average concentration of benzene in the waste stream entering the treatment process during each run i, ppmw.

n = Number of runs.

(iv) The mass flow rate of benzene exiting the treatment process (Ea) shall be determined by computing the product of the flow rate of the waste stream exiting the treatment process, as determined by the outlet flow meter or the inlet flow meter, and the benzene concentration of the waste stream, as determined using the sampling and analytical procedures specified in 40 CFR 61.355(c)(2) or (c)(3). Three grab samples of the waste shall be taken at equally spaced time intervals over a 1-hour period. Each 1-hour period constitutes a run, and the performance test shall consist of a minimum of 3 runs conducted over the same 3-hour period at which the mass flow rate of benzene entering the treatment process is determined. The mass flow rate

of benzene exiting the treatment process is calculated as follows: [40 CFR 61.355(e)(4)]

$E_a = K / (n * 10^6) [V_i C_i]$

Where:

E_a = Mass flow rate of benzene exiting the treatment process, kg/hr (lb/hr).

K = Density of the waste stream, kg/m^3 (lb/ft^3).

V_i = Average volume flow rate of waste exiting the treatment process during each run i, m^3/hr (ft^3/hr).

C_i = Average concentration of benzene in the waste stream exiting the treatment process during each run i, ppmw.

n = Number of runs.

(6) The Permittee using performance tests to demonstrate compliance of a treatment process with 40 CFR 61.348(a)(1)(iii) shall determine the benzene destruction efficiency for the combustion unit by the following procedure: [40 CFR 61.355(f)]

(i) The test shall be conducted under conditions that exist when the combustion unit is operating at the highest inlet waste stream flow rate and benzene content expected to occur. Operations during periods of startup, shutdown, and malfunction shall not constitute representative conditions for the purpose of a test. The owner or operator shall record all process information necessary to document the operating conditions during the test. [40 CFR 61.355(f)(1)]

(ii) All testing equipment shall be prepared and installed as specified in the appropriate test methods. [40 CFR 61.355(f)(2)]

(iii) The mass flow rate of benzene entering the combustion unit shall be determined by computing the product of the flow rate of the waste stream entering the combustion unit, as determined by the inlet flow meter, and the benzene concentration of the waste stream, as determined using the sampling procedures in 40 CFR 61.355(c)(2) or (c)(3). Three grab samples of the waste shall be taken at equally spaced time intervals over a 1-hour period. Each 1-hour period constitutes a run, and the performance test shall consist of a minimum of 3 runs conducted over a 3-hour period. The mass flow rate of benzene into the combustion unit is calculated as follows: [40 CFR 61.355(f)(3)]

$E_b = K / (n * 10^6) [V_i C_i]$

Where:

E_b = Mass flow rate of benzene entering the combustion unit, kg/hr (lb/hr).

K = Density of the waste stream, kg/m^3 (lb/ft^3).

V_i = Average volume flow rate of waste entering the combustion unit during each run i, m^3/hr (ft^3/hr).

C_i = Average concentration of benzene in the waste stream entering the combustion unit during each run i, ppmw.

n = Number of runs.

(iv) The mass flow rate of benzene exiting the combustion unit exhaust stack shall be determined as follows: [40 CFR 61.355(f)(4)]

(A) The time period for the test shall not be less than 3 hours during which at least 3 stack gas samples are collected and be the same time period at which the mass flow rate of benzene entering the treatment process is determined. Each sample shall be collected over a 1-hour period (e.g., in a tedlar bag) to represent a time-integrated composite sample and each 1-hour period shall correspond to the periods when the waste feed is sampled. [40 CFR 61.355(f)(4)(i)]

(B) A run shall consist of a 1-hour period during the test. For each run: [40 CFR 61.355(f)(4)(ii)]

(1) The reading from each measurement shall be recorded; [40 CFR 61.355(f)(4)(ii)(A)]

(2) The volume exhausted shall be determined using Method 2, 2A, 2C, or 2D from appendix A of 40 CFR part 60, as appropriate. [40 CFR 61.355(f)(4)(ii)(B)]

(3) The average benzene concentration in the exhaust downstream of the combustion unit shall be determined using Method 18 from appendix A of 40 CFR part 60. [40 CFR 61.355(f)(4)(ii)(C)]

(C) The mass of benzene emitted during each run shall be calculated as follows: [40 CFR 61.355(f)(4)(iii)]

M_i = KVC (10 ^-6)

Where:

M_i = Mass of benzene emitted during run i, kg (lb).

V = Volume of air-vapor mixture exhausted at standard conditions, m^3 (ft^3).

C = Concentration of benzene measured in the exhaust, ppmv.

K = Conversion factor, 3.24 kg/m^3 (0.202 lb/ft^3).

(D) The benzene mass emission rate in the exhaust shall be calculated as follows: [40 CFR 61.355(f)(4)(iv)]

$E_a = M_i / T$

Where:

E_a = Mass flow rate of benzene emitted from the combustion unit, kg/hr (lb/hr).

M_i = Mass of benzene emitted from the combustion unit during run i, kg (lb).

T = Total time of all runs, hr.

n = Number of runs.

(v) The benzene destruction efficiency for the combustion unit shall be calculated as follows: [40 CFR 61.355(f)(5)]

$R = ((E_b - E_a)/E_b) * 100)$

Where:

R = Benzene destruction efficiency for the combustion unit, percent.

E_b = Mass flow rate of benzene entering the combustion unit, kg/hr (lb/hr).

E_a = Mass flow rate of benzene emitted from the combustion unit, kg/hr (lb/hr).

(7) The Permittee using performance tests to demonstrate compliance of a wastewater treatment system unit with 40 CFR 61.348(b) shall measure the flow-weighted annual average benzene concentration of the wastewater stream where the waste stream enters an exempt waste management unit by collecting and analyzing a minimum of three representative samples of the waste stream using the procedures in 40 CFR 61.355(c)(3). The test shall be conducted under conditions that exist when the wastewater treatment system is operating at the highest inlet wastewater stream flow rate and benzene content expected to occur. Operations during periods of startup, shutdown, and malfunction shall not constitute representative conditions for the purpose of a test. The owner or operator shall record all process information as is necessary to document the operating conditions during the test. [40 CFR 61.355(g)]

(c) Monitoring Requirements

[25 PA Code §§127.511 & 139, §§114(a)(3) & 504(b) of Clean Air Act]

The Permittee shall monitor the following:

(1) For a waste stream to be exempt from 40 CFR 61.342(c)(1), the Permittee shall demonstrate, at least once per year, that the flow-weighted annual average benzene concentration for the waste stream is less than 10 ppmw as determined by the procedures specified in 40 CFR 61.355(c)(2) or 40 CFR 61.355(c)(3). [40 CFR 61.342(c)(2)]

(2) For a waste stream to be exempt from 40 CFR 61.342(c)(1), the Permittee shall demonstrate, at least once per year, year that the all of the following conditions are met: [40 CFR 61.342(c)(3)(ii)]

(i) The Permittee does not choose to exempt process wastewater, [40 CFR 61.342(c)(3)(ii)(A)]

(ii) The total annual benzene quantity in all waste streams chosen for exemption in 40 CFR 61.342(c)(3)(ii) does not exceed 2.0 Mg/yr as determined in the procedures in 40 CFR 61.355(j), and [40 CFR 61.342(c)(3)(ii)(B)]

(iii) The total annual benzene quantity in a waste stream chosen for exemption, including process unit turnaround waste, is determined for the year in which the waste is generated. [40 CFR 61.342(c)(3)(ii)(C)]

(3) If the Permittee complies with the requirements of 40 CFR 61.348(b), then the Permittee shall monitor each wastewater treatment system to ensure the unit is properly operated and maintained by the appropriate monitoring procedure as follows: [40 CFR 61.354(b)]

(i) For the first exempt waste management unit in each waste treatment train, other than an enhanced biodegradation unit, measure the flow rate, using the procedures of 40 CFR 61.355(b), and the benzene concentration of each waste stream entering the unit at least once per month by collecting and analyzing one or more samples using the procedures specified in 40 CFR 61.355(c)(3). [40 CFR 61.354(b)(1)]

(ii) For each enhanced biodegradation unit that is the first exempt waste management unit in a treatment train, measure the benzene concentration of each waste stream entering the unit at least once per month by collecting and analyzing one or more samples using the procedures specified in 40 CFR 61.355(c)(3). [40 CFR 61.354(b)(2)]

(4) The carbon adsorption system that does not regenerate the carbon bed directly on site in the control device (e.g., a carbon canister), either the concentration level of the organic compounds or the concentration leve of benzene in the exhaust vent stream from the carbon adsorption system shall be monitored on a regular schedule, and the existing carbon shall be replaced with fresh carbon immediately when carbon breakthrough is indicated. [40 CFR 61.354(d)]

(i) The device shall be monitored on a daily basis or at intervals no greater than 20 percent of the design carbon replacement interval, whichever is greater.

(ii) As an alternative to conducting this monitoring, the Permittee may replace the carbon in the carbon adsorption system with fresh carbon at a regular predetermined time interval that is less than the carbon replacement interval that is determined by the maximum design flow rate and either the organic concentration or the benzene concentration in the gas stream vented to the carbon adsorption system.

(5) Equipments of the individual drain systems installed in accordance with Section D.27(a)(3)(i), (ii), & (iii) shall be inspected as follows: [40 CFR 61..346(b)(4)]

(i) Each drain using water seal controls shall be checked by visual or physical inspection initially and thereafter quarterly for indications of low water levels or other conditions that would reduce the effectiveness of water seal controls.

(ii) Each drain using a tightly sealed cap or plug shall be visually inspected initially and thereafter quarterly to ensure caps or plugs are in place and properly installed.

(iii) Each junction box shall be visually inspected initially and thereafter quarterly to ensure that the cover is in place and to ensure that the cover has a tight seal around the edge.

(iv) The unburied portion of each sewer line shall be visually inspected initially and thereafter quarterly for indication of cracks, gaps, or other problems that could result in benzene emissions.

(6) The cover and all openings (e.g., access hatches, sampling ports, and gauge wells) of the fixed-roof shall be monitored initially and once per year by the methods specified in 40 CFR §61.355(h) to determine compliance with SectionD.27(a)(4)(i)(A) [40 CFR 61.347(a)(1)(i)(A)]

(7) The closed-vent system shall be monitored initially and once per year by the methods specified in 40 CFR §61.355(h) to determine compliance with SectionD.27(a)(6)(i)(A)(1) [40 CFR 61.349(a)(1)(i)]

(d) Recordkeeping Requirements

[25 PA Code §§127.511, 135.21, 135.5 & 139]

The Permittee shall keep the following records:

(1) The Permittee of a facility subject to the provisions of 40 CFR 61 subpart FF shall comply with the recordkeeping requirements of 40 CFR 61.356. Each record shall be maintained in a readily accessible location at the facility site for a period not less than five years from the date the information is recorded. [40 CFR 61.356(a)]

(2) The Permittee shall maintain records that identify each waste stream at the facility subject to 40 CFR 61 subpart FF, and indicate whether or not the waste stream is controlled for benzene emissions in accordance with 40 CFR 61 subpart FF. In addition the Permittee shall maintain the following records: [40 CFR 61.356(b)]

(i) For each waste stream not controlled for benzene emissions in accordance with this subpart, the records shall include all test results, measurements, calculations, and other documentation used to determine the following information for the waste stream: waste stream identification, water content, whether or not the waste stream is a process wastewater stream, annual waste quantity, range of benzene concentrations, annual average flow-weighted benzene concentration, and annual benzene quantity. [40 CFR 61.356(b)(1)]

(ii) For each waste stream exempt from 40 CFR 61.342(c)(1) in accordance with 40 CFR 61.342(c)(3), the records shall include: [40 CFR 61.356(b)(2)]

(A) All measurements, calculations, and other documentation used to determine that the continuous flow of process wastewater is less than 0.02 liters (0.005 gallons) per minute or the annual waste quantity of process wastewater is less than 10 Mg/yr (11 ton/yr) in accordance with 40 CFR 61.342(c)(3)(i), or [40 CFR 61.356(b)(2)(i)]

(B) All measurements, calculations, and other documentation used to determine that the sum of the total annual benzene quantity in all exempt waste streams does not exceed 2.0 Mg/yr (2.2 ton/yr) in accordance with 40 CFR 61.342(c)(3)(ii). [40 CFR 61.356(b)(2)(ii)]

(iii) For each facility where the annual waste quantity for process unit turnaround waste is determined in accordance with 40 CFR 61.356(b)(5), the records shall include all test results, measurements, calculations, and other documentation used to determine the following information: identification of each process unit at the facility that undergoes turnarounds, the date of the most recent turnaround for each process unit, identification of each process unit turnaround waste, the water content of each process unit turnaround waste, the annual waste quantity determined in accordance with 40 CFR 61.356(b)(5), the range of benzene concentrations in the waste, the annual average flow-weighted benzene concentration of the waste, and the annual benzene quantity calculated in accordance with 40 CFR 61.356(a)(1)(iii). [40 CFR 61.356(b)(5)]

(3) The Permittee transferring waste off-site to another facility for treatment in accordance with 40 CFR 61.342(f) shall maintain documentation for each offsite waste shipment that includes the following information: Date waste is shipped offsite, quantity of waste shipped offsite, name and address of the

facility receiving the waste, and a copy of the notice sent with the waste shipment. [40 CFR 61.356(c)]

(4) The Permittee using control equipment in accordance with 40 CFR 61.343 through 61.347 shall maintain engineering design documentation for all control equipment that is installed on the waste management unit. The documentation shall be retained for the life of the control equipment. If a control device is used, then the owner or operator shall maintain the control device records required by 40 CFR 61.356(f). [40 CFR 61.356(d)]

(5) The Permittee using a treatment process or wastewater treatment system unit in accordance with 40 CFR 61.348 shall maintain the following records. The documentation shall be retained for the life of the unit. [40 CFR 61.356(e)]

(i) A statement signed and dated by the Permittee certifying that the unit is designed to operate at the documented performance level when the waste stream entering the unit is at the highest waste stream flow rate and benzene content expected to occur. [40 CFR 61.356(e)(1)]

(ii) If engineering calculations are used to determine treatment process or wastewater treatment system unit performance, then the Permittee shall maintain the complete design analysis for the unit. The design analysis shall include for example the following information: Design specifications, drawings, schematics, piping and instrumentation diagrams, and other documentation necessary to demonstrate the unit performance. [40 CFR 61.356(e)(2)]

(iii) If performance tests are used to determine treatment process or wastewater treatment system unit performance, then the Permittee shall maintain all test information necessary to demonstrate the unit performance. [40 CFR 61.356(e)(3)]

(A) A description of the unit including the following information: type of treatment process; manufacturer name and model number; and for each waste stream entering and exiting the unit, the waste stream type (e.g., process wastewater, sludge, slurry, etc.), and the design flow rate and benzene content. [40 CFR 61.356(e)(3)(i)]

(B) Documentation describing the test protocol and the means by which sampling variability and analytical variability were accounted for in the determination of the unit performance. The description of the test protocol shall include the following information: sampling locations, sampling method, sampling frequency, and analytical procedures used for sample analysis. [40 CFR 61.356(e)(3)(ii)]

(C) Records of unit operating conditions during each test run including all key process parameters. [40 CFR 61.356(e)(3)(iii)]

(D) All test results. [40 CFR 61.356(e)(3)(iv)]

(iv) If a control device is used, then the Permittee shall maintain the control device records required by 40 CFR 61.356(f). [40 CFR 61.356(e)(4)]

(6) The Permittee using a closed-vent system and a carbon adsorber shall maintain the following records. The documentation shall be retained for the life of the control device. [40 CFR 61.356(f)]

(i) A statement signed and dated by the Permittee certifying that the closed-vent system and control device is designed to operate at the documented performance level when the waste management unit vented to the control device is or would be operating at the highest load or capacity expected to occur. [40 CFR 61.356(f)(1)]

(ii) If engineering calculations are used to determine control device performance in accordance with 40 CFR 61.349(c), then a design analysis for the control device that includes for example: [40 CFR 61.356(f)(2)]

(A) Specifications, drawings, schematics, and piping and instrumentation diagrams prepared by the Permittee, or the control device manufacturer or vendor that describe the control device design based on acceptable engineering texts. For the carbon adsorption system that regenerates the carbon bed directly on-site in the control device such as a fixed-bed adsorber, the design analysis shall consider the vent stream composition, constituent concentration, flow rate, relative humidity, and temperature. The design analysis shall also establish the design exhaust vent stream organic compound concentration level or the design exhaust vent stream benzene concentration level, number and capacity of carbon beds, type and working capacity of activated carbon used for carbon beds, design total steam flow over the period of each complete carbon bed regeneration cycle, duration of the carbon bed steaming and cooling/drying cycles, design carbon bed temperature after regeneration, design carbon bed regeneration time, and design service life of carbon. [40 CFR 61.356(f)(2)(i)(F)]

(7) The Permittee shall maintain a record for each visual inspection required by 40 CFR 61.343 through 61.347 that identifies a problem (such as a broken seal, gap or other problem) which could result in benzene emissions. The record shall include the date of the inspection, waste management unit and control equipment location where the problem is identified, a description of the problem, a description of the corrective action taken, and the date the corrective action was completed. [40 CFR 61.356(g)]

(8) The Permittee shall maintain a record for each test of no detectable emissions required by 40 CFR 61.343 through 61.347 and 61.349. The record shall include the following information: date the test is performed, background level measured during test, and maximum concentration indicated by the instrument reading measured for each potential leak interface. If detectable emissions are measured at a leak interface, then the record shall also include the waste management unit, control equipment, and leak interface location where detectable emissions were measured, a description of the problem, a description of the corrective action taken, and the date the corrective action was completed. [40 CFR 61.356(h)]

(9) For each treatment process and wastewater treatment system unit operated to comply with 40 CFR 61.348, the Permittee shall maintain documentation that includes the following information regarding the unit operation: [40 CFR 61.356(i)]

(i) Dates of startup and shutdown of the unit. [40 CFR 61.356(i)(1)]

(ii) If measurements of waste stream benzene concentration are performed in accordance with 40 CFR 61.354(a)(1), the Permittee shall maintain records that include date each test is performed and all test results. [40 CFR 61.356(i)(2)]

(iii) If a process parameter is continuously monitored in accordance with 40 CFR 61.354(a)(2), the Permittee shall maintain records that include a description of the operating parameter (or parameters) to be monitored to ensure that the unit will be operated in conformance with these standards and the unit's design specifications, and an explanation of the criteria used for selection of that parameter (or parameters). This documentation shall be kept for the life of the unit. [40 CFR 61.356(i)(3)]

(iv) If measurements of waste stream benzene concentration are performed in accordance with 40 CFR 61.354(b), the Permittee shall maintain records that include the date each test is performed and all test results. [40 CFR 61.356(i)(4)]

(v) Periods when the unit is not operated as designed. [40 CFR 61.356(i)(5)]

(10) For each control device, the Permittee shall maintain documentation that includes the following information regarding the control device operation: [40 CFR 61.356(j)]

(i) Dates of startup and shutdown of the closed-vent system and control device. [40 CFR 61.356(j)(1)]

(ii) A description of the operating parameter (or parameters) to be monitored to ensure that the control device will be operated in conformance with these standards and the control device's design specifications and an explanation of the criteria used for selection of that parameter (or parameters). This documentation shall be kept for the life of the control device. [40 CFR 61.356(j)(2)]

(iii) Periods when the closed-vent system and control device are not operated as designed including all periods and the duration when: [40 CFR 61.356(j)(3)]

(A) Any valve car-seal or closure mechanism required under 40 CFR 61.349(a)(1)(ii) is broken or the by-pass line valve position has changed. [40 CFR 61.356(j)(3)(i)]

(B) The flow monitoring devices required under 40 CFR 61.349(a)(1)(ii) indicate that vapors are not routed to the control device as required. [40 CFR 61.356(j)(3)(ii)]

(iv) If a carbon adsorber is used, then the owner or operator shall maintain records from the monitoring device of the concentration of organics or the concentration of benzene in the control device outlet gas stream. If the concentration of organics or the concentration of benzene in the control device outlet gas stream is monitored, then the owner or operator shall record all 3-hour periods of operation during which the concentration of organics or the concentration of benzene in the exhaust stream is more than 20 percent greater than the design value. If the carbon bed regeneration interval is monitored, then the owner or operator shall record each

occurrence when the vent stream continues to flow through the control device beyond the predetermined carbon bed regeneration time. [40 CFR 61.356(j)(9)]

(v) The Permittee shall maintain records of dates and times when the carbon adsorber is monitored, when breakthrough is measured, and shall record the date and time then the existing carbon in the control device is replaced with fresh carbon. [40 CFR 61.356(j)(10)]

(e) Reporting Requirements

(1) Annual Report. Beginning on the date that the equipment necessary to comply with these standards has been certified, the Permittee shall submit an annual report which includes and/or updates the following information: (If the information in the annual report required by 40 CFR 61.357(a)(1) through 40 CFR 61.357(a)(3) is not changed in the following year, the Permittee may submit a statement to that effect.) [40 CFR 61.357(d)(2)]

(i) Total annual benzene quantity from facility waste determined in accordance with 40 CFR 61.355(a). [40 CFR 61.357(a)(1)]

(ii) A table identifying each waste stream and whether or not the waste stream will be controlled for benzene emissions. [40 CFR 61.357(a)(2)]

(iii) For each waste stream identified as not being controlled for benzene emissions the following information shall be added to the table: [40 CFR 61.357(a)(3)]

(A) Whether or not the water content of the waste stream is greater than 10 percent; [40 CFR 61.357(a)(3)(i)]

(B) Whether or not the waste stream is a process wastewater stream, product tank drawdown, or landfill leachate; [40 CFR 61.357(a)(3)(ii)]

(C) Annual waste quantity for the waste stream; [40 CFR 61.357(a)(3)(iii)]

(D) Range of benzene concentrations for the waste stream; [40 CFR 61.357(a)(3)(iv)]

(E) Annual average flow-weighted benzene concentration for the waste stream; and [40 CFR 61.357(a)(3)(v)]

(F) Annual benzene quantity for the waste stream [40 CFR 61.357(a)(3)(vi)].

NOTE: The information required above should represent the waste stream characteristics based on current configuration and operating conditions. The Permittee only needs to list in the report those waste streams that contact materials containing benzene. [40 CFR 61.357(a)(4)]

(iv) The annual report shall include a table identifying each waste stream chosen for exemption and the total annual benzene quantity in these exempted streams. [40 CFR 61.357(d)(3)]

(v) A summary of all inspections during which detectable emissions are measured or a problem (such as a broken seal, gap or other problem) that could result in benzene emissions is identified, including information about the repairs or corrective action taken. [40 CFR 61.357(d)(8)]

(2) Quarterly Report. Beginning 3 months after the date that the equipment necessary to comply with these standards has been certified, the Permittee

shall submit a report quarterly to the EPA Administrator and AMS that includes: [40 CFR 61.357(d)(6)]

(i) A certification that all of the required inspections have been carried out. [40 CFR 61.357(d)(6)]

(ii) If a treatment process or wastewater treatment system unit is monitored in accordance with 40 CFR 61.354(b), then each period of operation during which the flow-weighted annual average concentration of benzene in the monitored waste stream entering the unit is equal to or greater than 10 ppmw and/or the total annual benzene quantity is equal to or greater than 1.0 mg/yr. [40 CFR 61.357(d)(7)(iii)]

(iii) For the carbon adsorber, each period of operation monitored during which any of the following conditions occur: [40 CFR 61.357(d)(7)(iv)]

(A) Each 3-hour period of operation during which the average concentration of organics or the average concentration of benzene in the exhaust gases from a carbon adsorber, condenser, or other vapor recovery system is more than 20 percent greater than the design concentration level of organics or benzene in the exhaust gas. [40 CFR 61.357(d)(7)(iv)(D)]

(B) Each occurrence when the carbon in a carbon adsorber system that is regenerated directly on site in the control device is not regenerated at the predetermined carbon bed regeneration time. [40 CFR 61.357(d)(7)(iv)(H)]

(C) Each 3-hour period of operation during which the parameters monitored are outside the range of values specified in 40 CFR 61.349(a)(2)(iv)(C), or any other periods specified by the EPA Administrator and AMS for a control device subject to the requirements of 40 CFR 61.349(a)(2)(iv). [40 CFR 61.357(d)(7)(iv)(J)]

(3) For the cover and closed-vent system monitored in accordance with 40 CFR 61.354(g), the Permittee shall submit a report quarterly to the EPA Administrator and AMS that identifies any period in which the pressure in the waste management unit is equal to or greater than atmospheric pressure. [40 CFR 61.357(d)(7)(v)]

28. Group 25B – SOCMI Wastewater

This section applies to HAP wastewater streams associated with SOCMI process units - Benzene and Cumene Production Units, Tank Truck Loading and Railcar Unloading (P-180 and P-181).

(a) Work Practice Standards

(1) The Permittee shall prepare a description of maintenance procedures for management of wastewaters generated from the emptying and purging of equipment in the process during temporary shutdowns for inspections, maintenance, and repair (i.e., a maintenance-turnaround) and during periods which are not shutdowns (i.e., routine maintenance). The descriptions shall: [40 CFR 63.105(b)]

(i) Specify the process equipment or maintenance tasks that are anticipated to create wastewater during maintenance activities. [40 CFR 63.105(b)(1)]

(ii) Specify the procedures that will be followed to properly manage the wastewater and control organic HAP emissions to the atmosphere; and [40 CFR 63.105(b)(2)]

(iii) Specify the procedures to be followed when clearing materials from process equipment. [40 CFR 63.105(b)(3)]

(4) The Permittee shall modify and update the information required by 40 CFR 63.105(b) as needed following each maintenance procedure based on the actions taken and the wastewaters generated in the preceding maintenance procedure. [40 CFR 63.105(c)]

(5) The Permittee shall implement the procedures described in 40 CFR 63.105(b) and 40 CFR 63.105(c) as part of the start-up, shutdown, and malfunction plan required under 40 CFR 63.6(e)(3). [40 CFR 63.105(d)]

(6) The Permittee of a new or existing source using biological treatment for at least one wastewater stream that is Group 1 for Table 9 compounds shall achieve a required mass removal of at least 95 percent for all Table 9 compounds. The Permittee of a new source using biological treatment for at least one wastewater stream that is Group 1 for Table 8 compounds shall achieve a required mass removal of at least 95 percent for all Table 8 compounds. All Group 1 and Group 2 wastewater streams entering a biological treatment unit that are from chemical manufacturing process units subject to 40 CFR 63 Subpart F shall be included in the demonstration of the 95-percent mass removal. The Permittee shall comply with 40 CFR 63.138(g)(1) through (g)(4). [40 CFR 63.138(g), 40 CFR 63.138(a)(1), 40 CFR 63.138(a)(2), 40 CFR 63.138(b)(2), and 40 CFR 63.138(c)(2)]

(i) Except as provided in 40 CFR 63.138(g)(4), the Permittee shall ensure that all Group 1 and Group 2 wastewater streams from chemical manufacturing process units subject to this rule entering a biological treatment unit are treated to destruct at least 95-percent total mass of all Table 8 and/or Table 9 compounds. [40 CFR 63.138(g)(1)]

(ii) For open biological treatment processes compliance shall be determined using the procedures specified in 40 CFR 63.145(g). For closed aerobic biological treatment processes compliance shall be determined using the procedures specified in 40 CFR 63.145(e) or (g). For closed anaerobic biological treatment processes compliance shall be determined using the procedures in 40 CFR 63.145(e). [40 CFR 63.138(g)(2)]

(iii) For each treatment process or waste management unit that receives, manages, or treats wastewater streams, from the point of determination of each Group 1 or Group 2 wastewater stream to the biological treatment unit, the Permittee shall comply with 40 CFR 63.133 through 40 CFR 63.137 for control of air emissions. When complying with this paragraph, the term Group 1 shall mean both Group 1 and Group 2. [40 CFR 63.138(g)(3)]

(iv) If a wastewater stream is in compliance with the requirements in 40 CFR 63.138(b)(1), (c)(1), (d), (e), (f), or (h) before entering the biological treatment unit, the hazardous air pollutants mass of that wastewater is not required to be included in the total mass flow rate entering the biological

treatment unit for the purpose of demonstrating compliance. [40 CFR 63.138(g)(4)]

(7) For each control device or combination of control devices used to comply with the provisions in 40 CFR 63.133 through 63.138, the Permittee shall operate and maintain the control device or combination of control devices in accordance with the requirements of paragraphs (b) through (f) of 40 CFR 63.139. [40 CFR 63.139(a)]

(i) Whenever organic hazardous air pollutants emissions are vented to a control device which is used to comply with the provisions of subpart F of 40 CFR 63, such control device shall be operating. [40 CFR 63.139(b)]

(6) The carbon adsorption system shall reduce the total organic compound emissions, less methane and ethane, or total organic hazardous air pollutants emissions vented to the control device of 95 percent by weight or greater or achieve an outlet total organic compound concentration, less methane and ethane, or total organic hazardous air pollutants concentration of 20 parts per million by volume, whichever is less stringent. [40 CFR 63.139(c)(2)]

(7) For the carbon canister, the design evaluation shall consider the vent stream composition, constituent concentrations, mass or volumetric flow rate, relative humidity, and temperature and shall establish the design exhaust vent stream organic compound concentration level, capacity of carbon bed, type and working capacity of activated carbon used for carbon bed, and design carbon replacement interval based on the total carbon working capacity of the control device and source operating schedule. [40 CFR 63.139(d)(2)(vi)]

(8) Except as provided in 40 CFR 63.140 of subpart F of 40 CFR 63, if gaps, cracks, tears, or holes are observed in ductwork, piping, or connections to covers and control devices during an inspection, a first effort to repair shall be made as soon as practical but no later than 5 calendar days after identification. Repair shall be completed no later than 15 calendar days after identification or discovery of the defect. [40 CFR 63.139(f)]

(9) Inspections. For each wastewater tank, surface impoundment, container, individual drain system, and oil-water separator that receives, manages, or treats a Group 1 wastewater stream, a residual removed from a Group 1 wastewater stream, a recycled Group 1 wastewater stream, or a recycled residual removed from a Group 1 wastewater stream, the Permittee shall comply with the inspection requirements specified in table 11 of 40 CFR 63, Subpart G. [40 CFR 63.143(a)]

(10) Delay of repair. Delay of repair of equipment for which a control equipment failure or a gap, crack, tear, or hole has been identified, is allowed if the repair is technically infeasible without a shutdown (as defined in 40 CFR 63.101) or if the Permittee determines that emissions of purged material from immediate repair would be greater than the emissions likely to result from delay of repair. Repair of this equipment shall occur by the end of the next shutdown. [40 CFR 63.140(a)]

(11) Delay of repair of equipment for which a control equipment failure or a gap, crack, tear, or hole has been identified, is allowed if the equipment is emptied

or is no longer used to treat or manage Group 1 wastewater streams or residuals removed from Group 1 wastewater streams. [40 CFR 63.140(b)]

(12) Delay of repair of equipment for which a control equipment failure or a gap, crack, tear, or hole has been identified is also allowed if additional time is necessary due to the unavailability of parts beyond the control of the Permittee. Repair shall be completed as soon as practical. [40 CFR 63.140(c)]

(b) Testing Requirements

(1) If complying with the 95-percent reduction efficiency requirements, comply with the requirements specified in 40 CFR 63.145(i)(1) through (i)(9). [40 CFR 63.145(i)]

(i) Compare mass destruction efficiency to required efficiency. If complying with the 95 percent reduction efficiency requirement, compliance is demonstrated if the mass destruction efficiency (calculated in Equation WW18) is 95 percent or greater. [40 CFR 63.145(i)(9)]

(2) The Permittee shall submit a request stating the basis for the selected monitoring frequencies and the methods that will be used. [40 CFR 63.143(c), 40 CFR 63.151(f)(1)]

(3) Performance tests for the 95-percent mass removal rate specified in 40 CFR 63.138(g) shall be conducted in accordance with the requirements of 40 CFR 63.145(g)(1), 40 CFR 63.145(e)(3)(ii), 40 CFR 63.145(e)(4)(ii) and 40 CFR 63.145(g)(2). [40 CFR 63.145(g)]

(c) Monitoring Requirements

[25 PA Code §§127.511 & 139, §§114(a)(3) & 504(b) of Clean Air Act]

The Permittee shall monitor the following:

(1) The Permittee shall request approval to monitor appropriate parameters that demonstrate proper operation of the biological treatment unit. The request should include a description of the parameter(s) to be monitored to ensure the control technology or pollution prevention measure is operated in conformance with its design and achieves the specified emission limit, percent reduction, or nominal efficiency, and an explanation of the criteria used to select the parameter(s). The Permittee shall include as part of the submittal the basis for the selected monitoring frequencies and the methods that will be used. [40 CFR 63.143(c), 63.151(f)(1)]

(2) Determine whether a wastewater stream is a Group 1 or Group 2 wastewater stream in accordance with 40 CFR 63.144 (b) and (c). [40 CFR 63.144(b) and 40 CFR 63.144(c)]

(3) Performance tests and design evaluations for control devices. The Permittee shall conduct either a design evaluation as specified in 40 CFR 63.139(d), or a performance test as specified in 40 CFR 63.145(i) for control devices other than flares and 40 CFR 63.145(j) for flares. [40 CFR 63.145(a)(2)]

(4) For each biological treatment unit used to comply with 40 CFR 63.138, the Permittee shall comply with the monitoring requirements specified in table 12 of 40 CFR 63, Subpart G. [40 CFR 63.143(b)]

(5) If the Permittee elects to comply with Item 1 in table 12 of 40 CFR 63, Subpart G, the Permittee shall request approval to monitor appropriate parameters that demonstrate proper operation of the biological treatment unit. The request shall be submitted according to the procedures specified in 40 CFR 63.151(f), and shall include a description of planned reporting and recordkeeping procedures. The Permittee shall include as part of the submittal the basis for the selected monitoring frequencies and the methods that will be used. The EPA Administrator and AMS will specify appropriate reporting and recordkeeping requirements as part of the review of the permit application or by other appropriate means. [40 CFR 63.143(c)]

(6) If the Permittee elects to comply with Item 3 in table 12 of 40 CFR 63, Subpart G, the Permittee shall request approval to monitor appropriate parameters that demonstrate proper operation of the selected treatment process. The request shall be submitted according to the procedures specified in 40 CFR 63.151(f), and shall include a description of planned reporting and recordkeeping procedures. The EPA Administrator and AMS will specify appropriate reporting and recordkeeping requirements as part of the review of the permit application or by other appropriate means. [40 CFR 63.143(d)]

(7) The Permittee shall comply with the requirements in 40 CFR 63.139(d) and with the requirements in 40 CFR 63.143(e)(1), 40 CFR 63.143(e)(2), or 40 CFR 63.143(e)(3). [40 CFR 63.143(e)]

(i) The Permittee shall comply with the following monitoring requirements specified in table 13 of subpart G of 40 CFR 63: [40 CFR 63.143(e)(1)]

(A) Monthly inspections of valves sealed closed with car-seal.

(B) Daily (or at intervals no greater than 20% of the design carbon replacement interval, whichever is greater) monitoring of organic compound concentration of adsorber exhaust; or [Table 13 of subpart G of 40 CFR 63]

(C) The Permittee shall use an organic monitoring device installed at the outlet of the control device and equipped with a continuous recorder. Continuous recorder is defined in 40 CFR 63.111; or [40 CFR 63.143(e)(2)]

(D) The Permittee shall request approval to monitor parameters other than those specified in 40 CFR 63.143(e)(1) or 40 CFR 63.143(e)(2). The request shall be submitted according to the procedures specified in 40 CFR 63.151(f), and shall include a description of planned reporting and recordkeeping procedures. The EPA Administrator and AMS will specify appropriate reporting and recordkeeping requirements as part of the review of the permit application or by other appropriate means. [40 CFR 63.143(e)(3)]

(8) For each parameter monitored in accordance with 40 CFR 63.143(c), 40 CFR 63.143(d), or 40 CFR 63.143(e), the Permittee shall establish a range that indicates proper operation of the treatment process or control device. In order to establish the range, the Permittee shall comply with the requirements

specified in 40 CFR 63.146(b)(7)(ii)(A) and 40 CFR 63.146(b)(8)(ii). [40 CFR 63.143(f)]

(9) Monitoring equipment shall be installed, calibrated, and maintained according to the manufacturer's specifications or other written procedures that provide adequate assurance that the equipment would reasonably be expected to monitor accurately. [40 CFR 63.143(g)]

(d) Recordkeeping Requirements

[25 PA Code §§127.511, 135.21, 135.5 & 139]

The Permittee shall keep the following records:

(1) The Permittee shall maintain a record of the information required by 40 CFR 63.105(b) and 40 CFR 63.105(c) as part of the start-up, shutdown, and malfunction plan. [40 CFR 63.105(e)]

(2) The EPA Administrator and AMS will specify appropriate reporting and recordkeeping requirements as part of the review of the permit application or by other appropriate means for the Permittee electing to comply with Item 1 in table 12 of subpart G of 40 CFR 63. [40 CFR 63.143(c)]

(3) The Permittee transferring a Group 1 wastewater stream or residual removed from a Group 1 wastewater stream in accordance with 40 CFR 63.132(g) shall keep a record of the notice sent to the treatment operator stating that the wastewater stream or residual contains organic hazardous air pollutants which are required to be managed and treated. [40 CFR 63.147(a)]

(4) The Permittee shall keep in a readily accessible location the following records: [40 CFR 63.147(b)]

(i) A record that each waste management unit inspection required by 40 CFR 63.133 through 63.137 was performed. [40 CFR 63.147(b)(1)]

(ii) A record that each inspection for control devices required by 40 CFR 63.139 was performed. [40 CFR 63.147(b)(2)]

(iii) A record of the results of each seal gap measurement required by 40 CFR 63.133(d) and 40 CFR 63.137(c). The records shall include the date of the measurement, the raw data obtained in the measurement, and the calculations described in 40 CFR 63.120(b)(2), 40 CFR 63.120(b)(3), and 40 CFR 63.120(b)(4). [40 CFR 63.147(b)(3)]

(iv) For Item 1 and Item 3 of table 12 of 40 CFR 63, subpart G, the Permittee shall keep the records approved by the EPA Administrator and AMS. [40 CFR 63.147(b)(4)]

(v) Continuous records of the monitored parameters specified in Item 2 of table 12 and table 13 of 40 CFR 63, Subpart G, and in 40 CFR 63.143(e)(2). [40 CFR 63.147(b)(5)]

(vi) Documentation of a decision to use an extension, as specified in 40 CFR 63.133(e)(2) or 40 CFR 63.133(h), which shall include a description of the failure, documentation that alternate storage capacity is unavailable, and specification of a schedule of actions that will ensure that the control equipment will be repaired or the vessel will be emptied as soon as practical. [40 CFR 63.147(b)(6)]

(vii) Documentation of a decision to use a delay of repair due to unavailability of parts, as specified in 40 CFR 63.140(c), shall include a description of the failure, the reason additional time was necessary (including a statement of why replacement parts were not kept on site and when the manufacturer promised delivery), and the date when repair was completed. [40 CFR 63.147(b)(7)]

(5) The Permittee shall keep records of the daily average value of each continuously monitored parameter for each operating day, except as provided below: [40 CFR 63.147(d)]

(i) For carbon adsorbers, the Permittee shall keep the records specified below instead of daily averages. [40 CFR 63.147(d)(2)]

(A) Records of the total regeneration stream mass flow for each carbon bed regeneration cycle. [40 CFR 63.147(d)(2)(i)]

(B) Records of the temperature of the carbon bed after each regeneration cycle. [40 CFR 63.147(d)(2)(ii)]

(6) If the Permittee uses process knowledge to determine the annual average concentration of a wastewater stream as specified in 40 CFR 63.144(b)(3) and/or uses process knowledge to determine the annual average flow rate as specified in 40 CFR 63.144(c)(1), and determines that the wastewater stream is not a Group 1 wastewater stream, the Permittee shall keep in a readily accessible location the documentation of how process knowledge was used to determine the annual average concentration and/or the annual average flow rate of the wastewater stream. [40 CFR 63.147(f)]

(e) Reporting Requirements

(1) The Permittee shall request approval to monitor appropriate parameters that demonstrate proper operation of the biological treatment unit. The request shall be submitted according to the procedures specified in 40 CFR 63.151(f), and shall include a description of planned reporting and recordkeeping procedures. The Permittee shall include as part of the submittal the basis for the selected monitoring frequencies and the methods that will be used. The EPA Administrator and AMS will specify appropriate reporting and recordkeeping requirements as part of the review of the permit application or by other appropriate means. [40 CFR 63.143(c)]

(2) For a control device used to comply with 40 CFR 63.138(b)(1), (c)(1), (d), (e), (f), or (g) for which the Permittee seeks to monitor a parameter other than those specified in table 11, table 12, or table 13 of 40 CFR 63, Subpart G, the Permittee shall submit a request for approval to monitor alternative parameters according to the procedures specified in 40 CFR 63.151(f) or (g).

(3) The Permittee shall submit the information specified in 40 CFR 63.146(b)(1) through (b)(9) as part of the Notification of Compliance Status required by 40 CFR 63.152(b). [40 CFR 63.146(b)]

(i) For each new and existing source, the Permittee shall submit the information specified in table 15 of 40 CFR 63, Subpart G for Table 8 and/or Table 9 compounds. [40 CFR 63.146(b)(2)]

(ii) For each treatment process identified in table 15 of 40 CFR 63, subpart G that receives, manages, or treats a Group 1 wastewater stream or residual removed from a Group 1 wastewater stream, the Permittee shall submit the information specified in table 17 of 40 CFR 63, Subpart G. [40 CFR 63.146(b)(4)]

(iii) For each waste management unit identified in table 15 of 40 CFR 63, Subpart G that receives or manages a Group 1 wastewater stream or residual removed from a Group 1 wastewater stream, the Permittee shall submit the information specified in table 18 of 40 CFR 63, Subpart G. [40 CFR 63.146(b)(5)]

(iv) For each residual removed from a Group 1 wastewater stream, the Permittee shall report the information specified in table 19 of 40 CFR 63, Subpart G. [40 CFR 63.146(b)(6)]

(v) For the nonregenerative carbon adsorber, the Permittee shall report the information specified below. [40 CFR 63.146(b)(7)]

(A) The information on parameter ranges specified in 40 CFR 63.152(b)(2) for the applicable parameters specified in table 13 of 40 CFR 63, Subpart G, unless the parameter range has already been established in the operating permit [40 CFR 63.146(b)(7)(ii)(A)]; and either

(B) The design evaluation specified in 40 CFR 63.139(d)(2) [40 CFR 63.146(b)(7)(ii)(B)]; or

(C) Results of the performance test specified in 40 CFR 63.139(d)(1). Performance test results shall include operating ranges of key process and control parameters during the performance test; the value of each parameter being monitored in accordance with 40 CFR 63.143; and applicable supporting calculations. [40 CFR 63.146(b)(7)(ii)(C)]

(4) For each treatment process, the Permittee shall submit the information specified below: [40 CFR 63.146(b)(8)]

(i) For Items 1 and 2 in table 12 of 40 CFR 63, Subpart G, the Permittee shall submit the information specified below: [40 CFR 63.146(b)(8)(i)]

(A) The information on parameter ranges specified in 40 CFR 63.152(b)(2) for the parameters approved by the EPA Administrator and AMS, unless the parameter range has already been established in the operating permit. [40 CFR 63.146(b)(8)(i)(A)]

(B) Results of the initial measurements of the parameters approved by the EPA Administrator and AMS and any applicable supporting calculations. [40 CFR 63.146(b)(8)(i)(B)]

(ii) For Item 3 in table 12 of 40 CFR 63, Subpart G, the Permittee shall submit the information on parameter ranges specified in 40 CFR 63.152(b)(2), unless the parameter range has already been established in the operating permit. [40 CFR 63.146(b)(8)(ii)]

(5) Except as provided in 40 CFR 63.146(b)(9)(iii), for each waste management unit or treatment process, the Permittee shall submit the information specified in either 40 CFR 63.146(b)(9)(I) or 40 CFR 63.146(b)(9)(ii). [40 CFR 63.146(b)(9)]

(i) The design evaluation and supporting documentation specified in 40 CFR 63.138(j)(1). [40 CFR 63.146(b)(9)(i)]

(ii) Results of the performance test specified in 40 CFR 63.138(j)(2). Performance test results shall include operating ranges of key process and control parameters during the performance test; the value of each parameter being monitored in accordance with 40 CFR 63.143; and applicable supporting calculations. [40 CFR 63.146(b)(9)(ii)]

(iii) If the Permittee elects to use one of the technologies specified in 40 CFR 63.138(h), the Permittee is exempt from the requirements specified in 40 CFR 63.146(b)(9)(I) or 40 CFR 63.146(b)(9)(ii). [40 CFR 63.146(b)(9)(iii)]

(6) For each waste management unit that receives, manages, or treats a Group 1 wastewater stream or residual removed from a Group 1 wastewater stream, the Permittee shall submit as part of the next Periodic Report required by 40 CFR 63.152(c) the results of each inspection required by 40 CFR 63.143(a) in which a control equipment failure was identified. Control equipment failure is defined for each waste management unit in 40 CFR 63.133 through 63.137. Each Periodic Report shall include the date of the inspection, identification of each waste management unit in which a control equipment failure was detected, description of the failure, and description of the nature of and date the repair was made. [40 CFR 63.146(c)]

(7) Except as provided in 40 CFR 63.146(f), for each treatment process used to comply with 40 CFR 63.138(b)(1), (c)(1), or (e), the Permittee shall submit as part of the next Periodic Report required by 40 CFR 63.152(c) the information specified in 40 CFR 63.146(d)(1), 40 CFR 63.146(d)(2), or 40 CFR 63.146(d)(3) for the monitoring required by 40 CFR 63.143(b). [40 CFR 63.146(d)]

(i) For Item 1 in table 12 of 40 CFR 63, Subpart G, the Permittee shall submit the results of measurements that indicate that the biological treatment unit is outside the range established in the Notification of Compliance Status or operating permit. [40 CFR 63.146(d)(1)]

(ii) For Item 2 in table 12 of 40 CFR 63, Subpart G, the Permittee shall submit the monitoring results for each operating day during which the daily average value of a continuously monitored parameter is outside the range established in the Notification of Compliance Status or operating permit. [40 CFR 63.146(d)(2)]

(iii) For Item 3 in table 12 of 40 CFR 63, Subpart G, the Permittee shall submit the monitoring results for each operating day during which the daily average value of any monitored parameter approved in accordance with 40 CFR 63.151(f) was outside the range established in the Notification of Compliance Status or operating permit. [40 CFR 63.146(d)(3)]

(8) Except as provided in 40 CFR 63.146(f), for each control device, the Permittee shall submit as part of the next Periodic Report required by 40 CFR 63.152(c) the information specified in either 40 CFR 63.146(e)(1) or 40 CFR 63.146(e)(2). [40 CFR 63.146(e)]

(i) The information specified in table 20 of 40 CFR 63, Subpart G, or [40 CFR 63.146(e)(1)]

(ii) If the Permittee elects to comply with 40 CFR 63.143(e)(2), i.e., an organic monitoring device installed at the outlet of the control device, the Permittee shall submit the monitoring results for each operating day during which the daily average concentration level or reading is outside the range established in the Notification of Compliance Status or operating permit. [40 CFR 63.146(e)(2)]

(9) Where the Permittee obtains approval to use a treatment process or control device other than one for which monitoring requirements are specified in 40 CFR 63.143, or to monitor parameters other than those specified in table 12 or 13 of 40 CFR 63, Subpart G, the EPA Administrator and AMS will specify appropriate reporting requirements. [40 CFR 63.146(f)]

(10) If an extension is utilized in accordance with 40 CFR 63.133(e)(2) or 40 CFR 63.133(h), the Permittee shall include in the next periodic report the information specified in 40 CFR 63.133(e)(2) or 40 CFR 63.133(h). [40 CFR 63.146(g)]

(f) Non-Applicable Requirements

(1) An open or closed biological treatment process in compliance with 40 CFR 63.138 and using 40 CFR 63.145(g) to demonstrate compliance is not subject to the requirements of 40 CFR 63.133 through 40 CFR 63.137. [40 CFR 63.138(a)(3)]

29. Group 26 – Benzene and Cumene Production

(a) Work Practice Standards

(1) For P181 (Benzene Recovery Unit 1732) the following requirements apply:

(i) Steam use in reboilers UE6, UE12, and UE24 shall not exceed 1.888 million lbs per day on a rolling 365-day basis. [Plan Approval No. 99110 and 99129, paragraph 2, dated December 13, 1999]

(ii) For fugitive leak sources (P112 and P113), see Group 07, Section D.8(a). [Plan Approval No. 99110 and 99129, paragraph 3, dated December 13, 1999]

(iii) For wastewater streams (P114, P115, and P123), see Groups 25A, Section D.27.(a), and 25B, Section D.28.(a). [Plan Approval No. 99110 and 99129, paragraph 4, dated December 13, 1999]

(2) For P180 (Cumene Production Unit 1733) the following requirements apply:

(i) The Cumene production rate from the facility shall be limited to 1.3 billion pounds per year (12,000 barrels per day on a 365-day average basis.) However, the cumene production rate shall not exceed 14,000 barrels on any given day. [Plan Approval No. 99127 and 99092, paragraph 2, dated October 29, 1999.

(3) The Total Resource Effectiveness (TRE) index value of each process vent UV-15, CUV-12, CUV-312 shall be greater than 4.0. [40 CFR 63.113(e), AMR XVI.B.1]

(b) Testing Requirements

(1) Testing requirements are covered by requirements cited for Groups 07, Section D.8.(b), 25A, Section D.27.(b), and 25B, Section D.28.(b).

(c) Monitoring Requirements

[25 PA Code §§127.511 & 139, §§114(a)(3) & 504(b) of Clean Air Act]

The Permittee shall monitor the following:

(1) Monitoring requirements are covered by requirements cited for Groups 07, Section D.8.(c), 25A, Section D.27.(c) and 25B, Section D.28.(c).

(2) Daily steam use in UE6, UE12, and UE24.

(3) Daily cumene production.

(4) Any process change [40 CFR 63.118(c)]

(i) Process change does not include: process upsets, unintentional, temporary process change, and changes that are within the range on which the original TRE calculation was based. [40 CFR 63.115(e)]

(d) Recordkeeping Requirements

[25 PA Code §§127.511, 135.21, 135.5 & 139]

The Permittee shall keep the following records:

(1) Recordkeeping requirements are covered by requirements cited for Groups 07, Section D.8.(d), 25A, Section D.27.(d) and 25B, Section D.28.(d).

(2) Combined steam use in UE6, UE12, and UE24 daily and for a rolling 365-day period.

(3) Cumene production daily and for a 365-day rolling average.

(4) Any process change and any recalculation of the TRE index value in accordance with 40 CFR 63.115(e) [40 CFR 63.118(c)]

(e) Reporting Requirements

(1) Reporting requirements are covered by requirements cited for Groups 07, Section D.8.(e), 25A, Section D.27.(e), and 25B, Section D.28.(e).

(2) Within 180 calendar days, the Permittee shall submit report of process change in accordance with Section 29(c)(4) that causes the process vents UV-15, CUV-12, CUV-312 to become a Group 2 process vent with a TRE less than 4.0. The report may be submitted as part of the next periodic report. The report shall include: [40 CFR 63.118(h)]

(i) A description of the process change,

(ii) The results of the recalculation of the TRE index value required under 40 CFR §63.115(e).

(iii) A statement that the owner or operator will comply with the requirements specified in 40 CFR §63.113(d).

30. Group 27 – Emergency Generators and Fire Pumps

(a) Emission Limitations

(1) Nitrogen Oxides (NOx) emission from each emergency generator and pump shall be less than 100 lbs/hr, 1000 lbs/day, 2.75 tons per ozone season (May 1 – September 30), and 6.6 tons per rolling 12-month period

(2) Particulate Matter emissions from each unite may not exceed 0.04 grain per dry standard cubic foot [25 Pa Code 123.13(c)(1)(i)]

(3) Carbon monoxide (CO) emissions from each unit may not exceed 1% by volume of exhaust gases [AMR VIII]

(4) Emissions from the Fire Pump #4 (FP-010) shall not exceed the following:

(i) Non-methane Hydrocarbon and Nitrogen Oxides (NMHC+NOx) emissions shall not exceed 4.0 g/kW-hr (3.0 g/hp-hr). [40 CFR 60.4205(c) and Table 4]

(ii) Carbon Monoxide (CO) emissions shall not exceed 3.5 g/kW-hr (2.6 g/hp-hr); [40 CFR 60.4205(c) and Table 4]

(iii) Particulate Matter (PM) emissions shall not exceed 0.20 g/kW-hr (0.15 g/hp-hr); [40 CFR 60.4205(c) and Table 4]

(b) Work Practice

(1) Each emergency generator shall be operated only during emergencies, emergency testing, and engine tuning.

(i) Emergencies are defined as when the primary power source for the facility has been rendered inoperable by an unanticipated incident.

(ii) Testing for each generator is limited to 30 minutes per week.

(iii) Engine tuning may be performed on the generator one time per year and is limited to four hours.

(2) Each emergency generator shall operate less than 500 hours per rolling 12-month period. [25 Pa Code §129.93]

(3) Each emergency generator and fire/mitigation pump shall be installed, maintained, and operated in accordance with manufacturer's specifications. [25 Pa Code §129.93]

(4) The Permittee shall only burn No.2 fuel oil in each Fire/Mitigation Pump. The maximum sulfur content of diesel fuel shall be 0.2 % by weight. [25 Pa Code §123.22(e) & AMR III Sec. I & III]

(i) The Fire Pump #4 (FP-010) shall only burn diesel fuel oil. The diesel fuel used in the fire pump shall meet the following requirements:

(A) The diesel fuel used in the emergency generator shall meet the following: [40 CFR 60.4207(b), 40 CFR 80.510(b)]

(1) The maximum sulfur content of the diesel fuel shall be 15 part per million (ppm);

(2) The minimum cetane index shall be 40 or maximum aromatic content of 35 volume percent.

(5) The fire/mitigation pumps shall be operated only during emergencies, testing, and engine tuning. [AMS Installation Permit 11101 dated 6/24/11, AMS Installation Permit 11346-52 dated 2/23/12]

(i) Emergencies are defined as when there is significant drop in pressure in the fire water system or when an actual or suspected release of HF occurs and the mitigation pumps must be activated.

(ii) Testing for the fire pump is limited to 30 minutes per week.

(iii) Engine tuning may be performed on the fire pump one time per year and is limited to four (4) hours.

(6) The Fire/Mitigation Pump shall operate less than 500 hours per rolling 12-month period.

(7) Sound levels produced by the emergency generator or pumps shall not exceed the following:

(i) 5 decibels above background level measured at the property boundary of the nearest occupied residential property: or

(ii) 10 decibels above background level measured at the property boundary of the nearest occupied non-residential property [Philadelphia Code Chapter 10-400 (Noise and Excessive Vibration) §10-403(3)]

(8) Vibration levels shall not exceed 0.15 inches per second beyond any source property boundary. [Philadelphia Code Title 10 Chapter 10-400]

(9) No testing and/or tuning of the Emergency Generators and Fire/Mitigation Pumps shall be performed on a day for which an Air Quality Forecast has predicted an Air Quality Action Day, or on an Air Quality Action Day [AMS XV, Sec III]

(10) Testing and/or tuning of the Emergency Generators and Fire/Mitigation Pumps during the ozone season, when not otherwise prohibited in Section D.30(b)(9), shall only be performed between the hours of 5:00 PM and 11:00 PM, except as follows: [AMS XV, Sec III]

(i) Facilities that are able to demonstrate compliance with Philadelphia Code Chapter 10-400 (Noise and Excessive Vibration) can perform testing and/or tuning between the hours of 5:00 PM and 7:30 AM.

(11) The Emergency Generators and Fire/Mitigation Pumps are exempt from the above condition in Section D.30(b)(9) and (10) during emergencies or emergency repairs regardless of the air quality. [AMS XV, Sec III]

(12) The Fire/Mitigation Pumps may be tested on the seventh day after six consecutive Air Quality Action Days, notwithstanding Section D.30.(b)(9) [AMR XV.Sec III.D]

(13) The Fire/Mitigation pump shall: [40 CFR 63.6602, Table 2c]

(i) Change oil and filter every 500 hours of operation or annually, whichever comes first;

(ii) Inspect air cleaner every 1,000 hours of operation or annually, whichever comes first;

(iii) Inspect all hoses and belts every 500 hours of operation or annually, whichever comes first, and replace as necessary.

(14) The Permittee shall install a non-resettable hour meter if one is not already installed on each emergency generator and Fire/Mitigation pump.

(15) The Permittee shall develop a maintenance plan for the Fire/Mitigation Pumps which must provide to the extent practicable for the maintenance and operation of the engine in a manner consistent with good air pollution control practice for minimizing emissions. [40 CFR 63.6625(e)]

(16) The Permittee must minimize the engine's time spent at idle during startup and minimize the engine's startup time to period needed for appropriate and safe loading of engine, not to exceed 30 minutes. [40 CFR 63.6625(h)]

(17) The Belmont Firehouse Williams Pump (fire pump FP-019) shall operate less than 500 hours per rolling 12 month period. The fire pump shall be operated only during emergencies, testing, tuning, and fire training. [AMS Installation Permit 13170 dated 7/31/13]

(i) Emergencies are defined as the endangerment of lives, of equipment, possessions, and inventories by fire.

(ii) Testing for the Belmont Firehouse Williams Pump (fire pump FP-019) is limited to 30 minutes per week.

(iii) Engine tuning may be performed on the Belmont Firehouse Williams Pump (fire pump FP-019) one time per year and is limited to four hours.

(iv) Fire training is limited to 16 hours per rolling 12 month period.

(18) The Belmont Firehouse Williams Pump (fire pump FP-019) shall be subject to 40 CFR 60 Subpart IIII if the fire pump is stationed at a location or a single site at the facility for a period of 1-year or more. [AMS Installation Permit 13170 dated 7/31/13]

(c) Testing Requirements [25 Pa Code §139]

(1) If at any time AMS has cause to believe that air contaminant emissions from any source(s) listed in Section A of this permit may be in excess of the limitations specified in this permit, or established pursuant to, any applicable rule or regulation contained in 25 PA Code Article III, the Permittee shall be required to conduct whatever test are deemed necessary by AMS to determine the actual emission rate(s).

(2) The following performance tests methods shall be used to demonstrate compliance with the emission limitations:

(i) U.S.E.P.A. Reference Methods 5 and 202 shall be used for particulate matter.

(ii) U.S.E.P.A. Reference Method 9 shall be used for opacity. At a minimum, opacity shall be determined as an average of 24 consecutive observations recorded at 15-second intervals.

(iii) U.S.E.P.A. Reference Method 10 shall be used for carbon monoxide.

(iv) ASTM D1266, D129, D1552, D2622 or D270 shall be used for sulfur in fuel.

(v) Compliance determination shall consist of the arithmetic means of results of three separate runs for each source test using U.S.E.P.A. Reference Methods 5/202 and 10. The source test shall be consistent with U.S.E.P.A. designated test methods and 25 Pa Code §139. The Permittee shall submit a test protocol to AMS for approval at least 30 days before the test date.

(vi) The Permittee may use alternative test methods to those listed in this section if they are given prior approval by AMS in accordance with 25 Pa Code §139.3.

(d) Monitoring Requirements

(1) The proper operation of each emergency generator and fire pump in accordance with manufacturers recommended operations and maintenance, operating hours on a 12-month rolling basis, and sulfur content in fuel oil.

(e) Recordkeeping Requirements

The Permittee shall keep following records;

(1) The Permittee shall provide verification or calculations to demonstrate compliance with the NOx emission limits in Section D.30 (a)(1) on a monthly basis and rolling 12-month basis. Verification may be based on AP-42, manufacturer's certified emission factors, or other AMS-approved emission factors;

(2) Operating hours for each emergency generator and fire/mitigation pump on a 12-month rolling basis

(3) The Air Quality Index (AQI) number or color code shall be determined and recorded when testing or tuning of an Emergency Generator and Fire/Mitigation Pump is conducted, to demonstrate compliance with Section D.30 (b)(9) and (12) [AMS XV, Sec IV]

(4) Monthly fuel type and manifests documenting the sulfur content of diesel fuel.

(5) Manufacturer's engine compliance certification to demonstrate compliance with the applicable emission standards in 40 CFR 60.4205(b) [40 CFR 60.4211(c)]

(6) Occurrence and duration of each malfunction of operation [40 CFR 63.6655(a)(2)]

(7) Oil and Air filter change, inspection of air cleaner, hoses, and belts to demonstration compliance with Section D.30.(b)(13)

(8) Date and location of the Belmont Firehouse Williams Pump (fire pump FP-019) each time the emergency fire pump is relocated to different site at the facility [AMS Installation Permit 13170 dated 7/31/13]

(f) Reporting Requirements

[25 Pa Code §127.442 & AMR I Sec. II]

(1) Any violation of an emission limitation that does not result from a malfunction requiring reporting under Section C.12 shall be reported (by phone call or facsimile transmission) to AMS within 24 hours of detection and followed by written notification within thirty-one (31) days.

31. Group 28. Internal Combustion Engines

(a) Emission Limitations

(1) Nitrogen Oxides (NOx) emission from each source shall be less than 100 lbs/hr, 1000 lbs/day, 2.75 tons per ozone season (May 1 – September 30), and 6.6 tons per rolling 12-month period

(2) Particulate Matter emissions from each unit may not exceed 0.04 grain per dry standard cubic foot [25 Pa Code 123.13(c)(1)(i)]

(3) Carbon monoxide (CO) emissions from each unit may not exceed 1% by volume of exhaust gases [AMR VIII]

(4) Carbon Monoxide (CO) emissions from pumps and air compressors (IC-002, IC-006, IC-007, IC-008, rIC-006, rIC-007) shall be limit to the following: [40 CFR §63.6602, Table 2c]

(i) Each pump and air compressor 100 ≤ hp ≤ 300 hp shall limit the CO concentration in the exhaust to 230 ppmvd or less at 15% O2

(5) Carbon Monoxide (CO) emissions from pumps and air compressors (IC-008) shall not exceed 2.6 g/bhp/hr [AMS Installation Permit 12098-99, dated 8/6/12]

(b) Work Practice

(1) Each units shall only burn fuel types as stated in Table A-1 Group 28.

(2) Sound levels produced by the fire pump shall not exceed the following: [Philadelphia Code Chapter 10-400 (Noise and Excessive Vibration) §10-403(3)]

(i) 5 decibels above background level measured at the property boundary of the nearest occupied residential property; or

(ii) 10 decibels above background level measured at the property boundary of the nearest occupied non-residential property.

(3) Vibration levels shall not exceed 0.15 inches per second beyond any source property boundary. [Philadelphia Code Title 10 Chapter 10-400]

(4) The maximum hours of operation of each pump and air compressor shall be as follows: [AMS Installation Permit 11345, 11362-74 dated 9/14/12, AMS Installation Permit 12000-03 dated 10/12/12]

Sources	Per rolling 12 month average
rIC-001 ≤ 14 BHP pump	7821 hours
rIC-002 ≤ 55 BHP air compressor	2419 hours
rIC-003 ≤ 55 BHP air compressor	2419 hours
rIC-004 ≤ 55 BHP air compressor	2419 hours
rIC-005 ≤ 101 BHP air compressor	2627 hours
rIC-006 ≤ 101 BHP air compressor	2627 hours
rIC-007 ≤ 144 BHP pump	1984 hours
IC-002 (53P-800C pump)	458 hours
IC-005 (FE-5(2) Flood Control Pump Driver)	2300 hours
IC-006 (Godwin 894572/4 Flood Control Pump Driver)	1150 hours
IC-007 (B-2623 Flood Control Pump Driver)	3050 hours
IC-008 (Engine Set 1290 (northside of	360 hours

8 Sep))	

(5) Each pump and air compressor shall meet the minimum Tier level as follows: [AMS Installation Permit 11345, 11362-74 dated 9/14/12, AMS Installation Permit 12000-03 dated 10/12/12]

Sources	Tier Level*
rIC-001 ≤ 14 BHP pump	No Tier
rIC-002 ≤ 55 BHP air compressor	Tier 4
rIC-003 ≤ 55 BHP air compressor	Tier 4
rIC-004 ≤ 55 BHP air compressor	Tier 4
rIC-005 ≤ 101 BHP air compressor	Tier 4
rIC-006 ≤ 101 BHP air compressor	Tier 4
rIC-007 ≤ 144 BHP pump	Tier 3
IC-002 (53P-800C pump)	No Tier
IC-005 (FE-5(2) Flood Control Pump Driver)	No Tier
IC-006 (Godwin 894572/4 Flood Control Pump Driver)	Tier 1
IC-007 (B-2623 Flood Control Pump Driver)	Tier 3
IC-008 (Engine Set 1290 (northside of 8 Sep))	Tier 2

*Tier level are based on 40 CFR 60 Subpart IIII

(6) Each pump and air compressor shall only burn diesel fuel. The diesel fuel shall meet the following requirements assuring compliance with 40 CFR 63.6604, 40 CFR §60.510(b)

(i) The maximum sulfur content of the diesel fuel shall be 15 part per million (ppm);

(ii) The minimum cetane index shall be 40 or maximum aromatic content of 35 volume percent.

(7) For each pump and air compressor less than 100 hp (IC-005, rIC-001, rIC-002, rIC-003, rIC-004): [40 CFR §63.6602, Table 2c, AMS Installation Permit 12000-03 dated 10/12/12]

(i) Change oil and filter every 1000 hours of operation or annually, whichever comes first;

- PES owned diesel pump shall use an oil analysis program as stated in 40 CFR 63.6625(i)

(ii) Inspect air cleaner every 1,000 hours of operation or annually, whichever comes first;

(iii) Inspect all hoses and belts every 500 hours of operation or annually, whichever comes first, and replace as necessary.

(8) The Permittee shall maintain the pump and air compressor less than 100 hp according to the manufacturer's emission-related written instructions or develop your own maintenance plan which must provide to the extent practicable for the maintenance and operation of the engine in a manner consistent with good air pollution control practice for minimizing emissions [40 CFR 63.6625(e)]

(9) The Permittee shall install a non-resettable hour meter if one is not already installed. [assures compliance with 40 CFR 63.6625(f)]

(10) The Permittee must minimize the engine's time spent at idle during startup and minimize the engine's startup time to period needed for appropriate and safe loading of engine, not to exceed 30 minutes. [40 CFR 63.6625(h)]

(c) Testing Requirement

(1) If at any time AMS has cause to believe that air contaminant emissions from any source(s) listed in Section A of this permit may be in excess of the limitations specified in this permit, or established pursuant to, any applicable rule or regulation contained in 25 PA Code Article III, the Permittee shall be required to conduct whatever test are deemed necessary by AMS to determine the actual emission rate(s).

(2) The following performance tests methods shall be used to demonstrate compliance with the emission limitations:

(i) U.S.E.P.A. Reference Methods 5 and 202 shall be used for particulate matter.

(ii) U.S.E.P.A. Reference Method 9 shall be used for opacity. At a minimum, opacity shall be determined as an average of 24 consecutive observations recorded at 15-second intervals.

(iii) U.S.E.P.A. Reference Method 10 shall be used for carbon monoxide.

(iv) ASTM D1266, D129, D1552, D2622 or D270 shall be used for sulfur in fuel.

(v) Compliance determination shall consist of the arithmetic means of results of three separate runs for each source test using U.S.E.P.A. Reference Methods 5/202 and 10. The source test shall be consistent with U.S.E.P.A. designated test methods and 25 Pa Code §139. The Permittee shall submit a test protocol to AMS for approval at least 30 days before the test date. The test report shall be submitted for approval to AMS at least 60 days prior to the test.

(vi) The Permittee may use alternative test methods to those listed in this section if they are given prior approval by AMS in accordance with 25 Pa Code §139.3.

(3) The Permittee shall demonstrate initial compliance with the CO concentration in Section D.31(a)(4) on each pump or air compressor greater than 100 hp (IC-001, IC-002, IC-003, IC-004, IC-006, IC-007, IC-008, IC-009, rIC-006, rIC-007) [40 CFR §63.6610(a) & 40 CFR §63.6612(a)]

(i) The performance test shall comply with 40 CFR 63 Subpart ZZZZ, Table 4 and 40 CFR §63.6620

(ii) During the initial performance test, the Permittee must establish each operating limitation

(d) Monitoring Requirements

The Permittee shall monitor:

(1) The proper operation of each unit in accordance with manufacturers recommended operations and maintenance, operating hours on a 12-month rolling basis, and fuel usage and sulfur content in fuel oil

(2) Each maintenance conducted on each pump and air compressor to demonstrate that the engines are operated and maintained in accordance to the maintenance plan. [40 CFR 63.6625(e) & 40 CFR 63.6655(e)]

(e) Recordkeeping Requirements

The Permittee shall keep following records;

(1) NOx emission per rolling 12-month period, calculated monthly to demonstrate compliance with Section D.31.(a)(1). Verification shall be based on AP-42 factors, manufacturer's specification, or other AMS approved emission factors.

(2) Daily operating hours, operating hours per rolling 12-month period calculated monthly to assure compliance with Section D.31.(b)(4)

(3) Monthly fuel type and manifests documenting the sulfur content of diesel fuel.

(4) Manufacturer's engine compliance certification to demonstrate compliance with the Tier level in Section D.31.(b)(5)

(5) Occurrence and duration of each malfunction of operation [40 CFR 63.6655(a)(2)]

(6) Oil and Air filter change, inspection of air cleaner, hoses, and belts to demonstration compliance with Section D.31.(b)(7)

(7) Performance tests

(f) Reporting Requirements

(1) For each pump and air compressor, the Permittee shall report, in accordance with 40 CFR 63.6650, each instant in which there is a deviation in the emission limitation or operating limitation, [40 CFR 63.6640(b)]

(2) The Permittee shall submit Semi-Annual Compliance reports beginning with May 3, 2013. [40 CFR 63.6650]

(i) Each deviation of emission limitation and operating limitation that occurs during the reporting period shall be reported and the reports must contain the following:

(A) The total operating time of each pump and air compressor at which the deviation occurred during the reporting period.

(B) Information on the number, duration, and cause of deviations (including unknown cause if applicable), as applicable and corrective action taken

(ii) If there are no deviations from any emission limitations or operating limitations, a statement that there were no deviations from the emission limitations or operating limitations during the reporting period;

SECTION E. OPEN BURNING VARIANCE FOR TRAINING

The Permittee may conduct controlled open burning for the firefighting and employee training as follows: [AMS Approval Letter January 25, 2011]

(1) The Permittee shall notify AMS – Facility Compliance Section at 215-685-7580 at least 24 hours prior to any controlled open burning.

(2) All controlled open burning shall follow the parameters specified in January 5, 2011 letter.

(a) The Permittee must obtain approval from AMS prior to changing any of th procedures listed in the January 5, 2011 letter.

(b) AMS may modify or revoke the open burning variance approval if it is determined necessary to prevent air pollution problems.

SECTION F. NON APPLICABLE REQUIREMENTS

AMS has determined that the following regulations are not applicable to the facility:

Pennsylvania Regulations:

25 Pa Code §123.12 – Incinerators

25 Pa Code §129.12 – Sulfuric Acid Plants

25 Pa Code §129.52 – Surface Coating Processes

25 Pa Code §129.54 – Seasonal Incineration Equipment

25 Pa Code §129.59 – Bulk Gasoline Terminals

25 Pa Code §129.60 – Bulk Gasoline Plants

25 Pa Code §129.65 – Ethylene Production Plants

25 Pa Code §129.82 – Control of VOC from gasoline dispensing facilities (Stage II)

NSPS Regulations:

40 CFR 60 Subpart D – Fossil fuel steam gen. units

40 CFR 60 Subpart D(a) – Fossil fuel electric utility boilers

40 CFR 60 Subpart D(c) – Small I/C/I steam gen. units

40 CFR 60 Subpart J – Petroleum refineries – FCC SO2 (no FCC has triggered the SO2 portion of this rule)

40 CFR 60 Subpart GG – Stationary gas turbines

40 CFR 60 Subpart UU – Asphalt roofing plants (stg. blowing of non-roofing asph.)

40 CFR 60 Subpart XX – Bulk Gasoline Terminals

MACT Regulations:

40 CFR 63 Subpart R – Gasoline Distribution (no gasoline loading in refinery)

40 CFR 63 Subpart Y – Mar. Ves. Ldg. – Gaso/Crude/HAP (facility does not trigger loading volume or HAP emission triggers)

40 CFR 63 Subpart DD – Offsite Waste

The following NESHAP regulations have been streamlined as a result of the applicability of related MACT regulations.

40 CFR 61 Subpart J – Bz VHAP Lks (10%w Bz) – 40 CFR 63 Subpart H has subsumed all previous 61/J applicabilities

40 CFR 61 Subpart V – VHAP Equipment Lks – 61/V is the technical section for Subpart J (see comment above)

40 CFR 61 Subpart Y – Bz (product) Storage – 40 CFR 63 Subpart G has subsumed all previous 61/Y applicabilities

40 CFR 61 Subpart Y – Bz (product) Storage – 40 CFR 63 Subpart G has subsumed all previous 61/Y applicabilities

SECTION G. ALTERNATIVE MONITORING PROTOCOL FOR FLARES.

Summary of Alternative Monitoring Protocol/Plan (AMP)
Sunoco Philadelphia Refinery (Girard Point) 1231/1232 Plant Flare System

Submittal Date: July 5, 2010
Due Date: December 31, 2010
Plan Implementation Date: December 31, 2010

Summary

Under a global settlement document entered by Sunoco in USA v. Sunoco, Inc., Civil Action No. 05-02266 (W.D. Pa) (the "Consent Decree"), the 1231/1232 Plant Flare in Philadelphia must be compliant with NSPS Subparts A and J by December 31, 2010. This Document is the Alternative Monitoring Protocol (AMP) submittal required as an option under Appendix H of that Settlement. This document demonstrates the method that Sunoco will use to continuously demonstrate compliance of the 1231/1232 Plant Flare System with the requirements of 40 C.F.R. Part 60, Subparts A and J.

This document identifies all continuous and intermittent streams into the flare system, and for each continuous and intermittent stream, provides the following:

Section 1. - A description of the stream and piping diagram
Section 2. - A statement confirming no crossover or sour gas entry points
Section 3. - An explanation of conditions that ensure low emission rates
Section 4. - Supporting test results using H2S monitoring
Section 5. - A description of how the sampling is representative of normal operation

Section 6. - Identification of a representative process parameter to be monitored as an indicator of stream sulfur
Section 7. - A suggested parameter limit for each gas stream and a review schedule

Note: Attached to this summary are detailed line by line spread sheets that contain each individual flare connection with identifying information. These spreadsheets are segregated into 28 specific areas, by unit or unit area. The P & I D drawings, that locate those connections, are referenced on the spread sheets. These drawings are currently being updated and will be maintained by Sunoco. Due to the sheer volume of information required to support this AMP, this summary sheet's purpose is to provide an overview of the AMP and the methodology that Sunoco used in its creation. The 1231/1232 Plant Flare system may undergo minor, insignificant changes during the life of this AMP. These changes will not significantly alter the AMP. Examples of these changes are: the addition of a new sample point that vents to the flare, the addition of a new relief valve, and/or the addition of a new seal pot. If any changes to the flare trigger additional requirements (such as NSPS Subpart Ja), then those requirements will be incorporated into the AMP as appropriate. If additional monitoring requirements are triggered due to flare modification, Sunoco will comply with those monitoring requirements as appropriate (which may include submission of a revised AMP approval request in accordance with NSPS requirements). Sunoco's Management-Of-Change system will capture any such changes as they occur and the AMP will be updated on an annual basis, if necessary.

Brief description of the 1231/1232 Plant Flare System

The 1231/1232 Plant Flare system services the entire Girard Point side of the Philadelphia Refinery with one exception. The lone exception includes the 433 unit (Alkylation Unit), which is serviced by its own flare. Although there are two distinct flare stacks (1231 and 1232 stacks), only one flare is designed to be operating at any given time. The Girard Point process units serviced by this flare system include the following:

1232 Unit
531 Unit / 8733 Unit
1732 Unit
1733 Unit
1332 Unit
433 Unit (North Butane tank field only)
137 Unit
231 Unit
331 Unit
431 Unit (Including the 431 tank field)

Both flares are steam assisted and are approximately 185 feet above grade with a 24" diameter flare tip. Both flare headers maintain pressure with refinery fuel gas and also have the ability to burn supplemental natural gas. Regarding the 1231 flare, the ability to burn natural gas is inherent in the operational design of this flare. In order for the 1232 flare to burn natural gas, however, a few minor operational adjustments must first be performed.

Both flares are equipped with an IR camera to monitor the presence of a flame. IR camera data is maintained within the refinery PKS system and a real-time status can be accessed using computer monitors in both the Central Control Room and the 1232 Unit blockhouse. In addition, a video camera monitors the operating flare to verify smokeless operation. A video screen of the operating flare can be viewed within the Central Control Room and the 1232 Unit blockhouse.

Each flare has its own knockout drum and the 1231/1232 flare system is operated such that one flare stack is operated at any given time. During normal operation, both flare knockout drums are used in-series with the 1231 flare stack used as the primary flare. Only in the event that the 1232 Unit is shutdown, or when maintenance work is to be performed on the 1231 flare, will the 1232 flare stack be used. Accordingly, the 1231 flare stack is utilized over 90% of the time.

The 1231/1232 flare system is isolated from the other Philadelphia Refinery flare systems, both on the Girard Point and Point Breeze sides of the refinery.

Brief Description of Units Protected by the 1231/1232 Plant Flare System

Fluidized Catalytic Cracking Unit (1232):

The 1232 Fluidized Catalytic Cracking Unit can be divided into three sections; the "cat" side, the recovery side, and the blower/compressor area. On the "cat" side of the process, fresh feed, after being heated, enters the riser where it is vaporized as it is mixed with hot regenerated catalyst from the regenerator. As the feed progresses up the riser, in contact with the catalyst, it is catalytically cracked as 70-75% of the feedstock is converted to gasoline and lighter materials. At the riser outlet, the mixture of catalyst and hydrocarbon vapor enters cyclones in the reactor, where separation of hydrocarbon and catalyst occurs. The hydrocarbon vapors are routed to the Main Fractionator for primary separation. The carbon laden spent catalyst exits the bottom of the reactor cyclone and settles into the Reactor Stripper where rising steam removes any entrained hydrocarbon from the spent catalyst. The catalyst is then transferred into the Regenerator where air contacts the mixture to attain efficient and effective combustion of the carbon off the catalyst. Flue gas and catalyst fines travel up the regenerator and pass through cyclones to recover the entrained catalyst.

The purpose of the Recovery side of the process is to separate and recover the dry gas, C3's, C4's and gasoline (C5+). The net effect of the processing carried out in the Recovery side (i.e. fractionation, absorption and stripping) is that the wet gas and unstabilized gasoline are separated into the desired products. These products consist of heavy catalytic gasoline, light catalytic gasoline, C3's, C4's and dry gas.

The Main Air Blower consists of a 33,000 horsepower electric motor, a gearbox, and axial air compressor. The lube oil, electrical, cooling water, and inlet air filtration systems are also present in this area.

531 Complex

The 531 complex includes four basic subunits/processes including the 531 Amine Treater, the 8733 Sour Water Stripper, the Girard Point fuel gas system, CO Boiler, Selective Catalytic Reduction (SCR) reactor, Wet Gas Scrubber, and the purge Treatment Unit (PTU).

The purpose of the 531 Amine Unit is to remove hydrogen sulfide from the 1232 absorber off-gas stream. The system consists of an absorber tower, two knockout drums, and a flash drum. Sour gas from the 1232 unit is routed through a Sour Gas Knockout Drum and enters the bottom of the C-2 Absorber. A lean amine solution brought in from the 867 Sulfur Recovery Unit flows through Amine Coolers, and enters the C-2 Absorber. In the absorber, the amine solution flows down the column and selectively absorbs H2S from the fuel gas flowing up the column. The C-2 overhead gas, now H2S free, flows through a knockout drum to the refinery fuel gas system. The H2S rich amine from the bottom of the C-2 Tower, combined with rich amine from the 1232 and 231 Units, flows to the D-3 Flash Drum where the steam and hydrocarbon is gassed-off to the 1232 unit. Rich amine is sent to the 867 Sulfur Recovery Unit for regeneration.

Some of the Philadelphia Refinery units produce process water streams that are rich in sulfides, NH3 and phenol. In order to remove these contaminants, the water is routed through the Unit 8733 Sour Water Stripper. Sour water tanks receive water from various units, which is then pumped through a heat

exchanger. The water is then pumped through additional heat exchangers to the top of Stripper Tower C-201. The stripped water is routed to 137 Crude Unit to be used as wash water in the crude feed desalters, while the overhead gas is routed to the 531 COB to be burned.

Any Girard Point process unit gas streams that are to be used for fuel must first flow to the V-10001 Fuel Gas Mix Drum. V-10001 combines and mixes all of these gas streams in order to provide a uniform fuel gas composition for use throughout the refinery. In the drum, liquids are knocked-out and returned to the F-103 Distillate Drum at 1232 FCCU or to the blowdown system. LPG, natural gas or hydrogen can be supplemented to the fuel gas mix system to maintain adequate fuel gas pressure and composition.

The CO Boiler is a pollution control device used to burn the CO in the flue gas from the 1232 FCCU Regenerator. The CO Boiler operates using a combination of refinery fuel gas, sour gas from the 8733 Sour Water Stripper and 1232 unit flue gas CO. This exothermic reaction produces steam for use in the refinery.

UDEX/Benzene Unit (1732)

The primary purpose of the UDEX unit is to recover benzene, which is used to feed the cumene unit (1733). In addition to the end product of benzene, two byproducts are recovered; a toluene mixture and raffinate. Both byproducts are used as gasoline blending components.

The benzene unit is fed by the Depentanizer side draws and bottoms from the catalytic reforming units at the Philadelphia Refinery. The UDEX charge is a combination of benzene, toluene and raffinate. The UDEX unit is essentially split into two sections - the extraction section and the fractionation section. The primary purpose of the extraction section is to separate aromatics from non-aromatics. The fractionation section then separates different aromatics.

In the extraction section, the UDEX charge enters the Extractor Tower where it contacts glycol solvent. The solvent extracts the aromatics, thus separating them from the non-aromatics. The raffinate exits the top of the Extractor Tower, then proceeds through various processes including cooling, coalescing and settling. The aromatic rich solvent exits the bottom of the Extractor Tower and is directed to a Stripper Tower, where steam removes all hydrocarbons from the solvent. The aromatic vapors (called extract) are taken from a side draw and condensed before flowing to an Extractor Receiver, where the extract is separated from wet solvent. The extract is then washed in the extract settler before it is sent to the North Clay Tower Charge Tank. The stripper tower overhead vapors are condensed prior to flowing to the Stripper Receiver.

The fractionation section is fed through Clay Towers from the Clay Tower Charge Tank, in order to remove trace quantities of contaminants. The Clay Tower outlet stream is split between two Benzene Towers, where benzene and toluene are fractionated (separated).

Cumene Unit (1733)

The cumene unit converts propylene and benzene into cumene using catalytic alkylation and trans-alkylation reactions. The unit contains two alkylation reactors which operate in series and one trans-alkylation reactor. The feedstocks (propanes/propylenes and benzene) are first purified because the Zeolite catalyst used in the downstream process is highly susceptible to poisons. Propanes/propylenes (PP) are first treated to remove sodium and light nitrogen compounds, then sent to the Deethanizer to remove light impurities such as ethane, ethylene and water. Downstream purification processes also include the removal of nitrogen, oxygenate and select sulfur compounds, bypassing the PP feed through Arsine Treaters and activated alumina. Benzene feed pretreatment includes pumping the raw material through Clay Treaters, which remove basic nitrogen compounds and water.

In the alkylation reaction, benzene is alkylated with propylene in the liquid phase over a proprietary Zeolite-type catalyst. The alkylation reactor section consists of two reactors with four catalyst beds each. The reactor effluent enters the unit Flash Tower, then continues to the unit Depropanizer, where propane is recovered. Other unit processes include benzene recovery, cumene recovery and DIPB (di-iso-propyl benzene) recovery.

The trans-alkylation reactor converts benzene and a DIPB stream over a proprietary Zeolite-type catalyst to produce cumene. The product stream from this reaction contains cumene and unreacted benzene. The stream is fed to the Recycle Column to separate the benzene and cumene.

Catalytic Reformer Unit (1332)

Light and heavy naphtha, together with stripper overhead gasoline from the 231 Unit, are fed to the Reformer Feed/Effluent Exchangers and then to the Prefractionator. This column separates the lighter components and the heavy ends from the naphtha. The Prefractionator bottoms are sent to the 231 Unit as feed. The Prefractionator off-gasses are sent to the unit 1232 FCCU Low Pressure Distillate Drum (F-103) for recovery. The Prefractionator overhead liquid is caustic treated, then sent to the 431 DIB or used as a gasoline blending stock. The middle cut off the Prefractionator is whole naphtha. A hydrogen stream from the reformer section is mixed with this naphtha before it enters the Hydrobon Feed/Effluent Exchangers. This combined stream then enters a heater and is fed to the reactor. In the reactor, hydrogen reacts with the sulfur and nitrogen compounds in the naphtha to form H2S and NH3, thereby reducing the sulfur and nitrogen in the naphtha to the required low levels specified by the catalyst manufacturer. The reactor effluent enters a series of exchangers before entering the Hydrobon Separator. Hydrogen is removed at this separator and is sent to the hydrogen system. The liquid is sent to the Hydrobon Stripper, where H2S, NH3 and light components are removed and sent to C-703 compressor where it is compressed and sent to 862 Light Ends Unit to recover the hydrocarbon. The stripper bottoms are sent to the reformer section as feed.

The purpose of the Reformer is to increase the octane of treated naphtha. Treated naphtha from the Hydrobon is mixed with a recycled hydrogen stream. The reaction mix is heated in exchangers before entering the first charge heater. The heater reactor feed then enters Reactor #1. Because the reaction is endothermic, the mix leaving Reactor #1 is heated in the 2nd charge heater before entering Reactor #2. The mix leaving the second reactor is once again heated in the 3rd charge heater and then enters Reactor #3. The mix leaving Reactor #3 is sent directly to Reactor #4 without any additional preheating. Reactor catalyst consists of an alumina base with platinum and rhenium metals. A chloride chemical is injected into the feed before the reactors, to promote the catalyst activity. The reforming reaction causes a rearrangement of the naphtha molecules, resulting in an octane boost of the naphtha and the formation of benzene, toluene, and hydrogen. The reactor effluent leaves Reactor #4 and, after heat exchange transfer, enters the Product Separator Drum. In this drum, the hydrogen is separated from the reaction mix. The liquid leaving the Product Separator enters the unit Depropanizer, where propane and lighter materials are separated and sent to the 862 unit for propane recovery. The Depropanizer bottoms are sent to the unit Debutanizer. The Debutanizer produces an overhead butane/pentane liquid which is sent to the 431 DIB to recover isobutane. The bottoms from the Debutanizer is called Reformate, which is fed to the Depentanizer, where all of the benzene and some toluene is separated and sent to the 1732 UDEX plant as feed. The Depentanizer bottoms are sent to gasoline blending.

433 Complex Butane Storage Tankfield

The 433 Unit Complex Butane Storage Tankfield is a system of piping manifolds, pumps and storage spheres designed to receive, store, and transfer butanes in the Philadelphia Refinery. The system is capable of receiving butane directly from several Girard Point process units, then manifolding the transfer a multitude of ways to any of the six storage spheres. The spheres also serve as supplemental feed tanks to three process units in the Girard Point complex. In addition, butanes may be received for storage or transferred from/to Point Breeze and the Schuykill River Tank Farm.

Crude Unit (137)

Raw crude is pumped to this unit and split into two parallel trains. It is then mixed with water and pumped to two spherical Desalters via exchangers. The crude is then fed to a surge drum, where the remaining water and light components of the crude is flashed. The crude is next pumped through an elaborate feed/product heat exchanger train to the Flash Drum, where approximately ¼ of the heated crude is vaporized and sent

directly to the Atmospheric Tower. The remaining liquid crude is heated in the F-1 Atmospheric Furnace before being sent to the Atmospheric Tower. The light ends from the Atmospheric Tower are compressed and mixed with light naphtha in the Recontact Drum to remove light products. The light gas from the Recontact Drum is sent to the FCCU for further recovery. The light naphtha is pumped to the Debutanizer Tower, where additional light ends are removed.

The bottoms from the Atmospheric Tower are heated in the F-2 and F-3 Vacuum Furnaces and then sent to the Vacuum Tower. The non-condensable gases from the Vacuum Tower are currently sent to the F-1 Atmospheric Furnace as an additional fuel source (Note: In the future, these gases will be sent to the 1232 Unit CO Boiler). The condensable gases are sent to crude suction or the heavy furnace oil line.

Gulfiner Unit (231)

The purpose of the 231 Gulfiner is to remove sulfur from distillate utilizing hydrogen in the presence of a catalyst. The Gulfiner is capable of treating virgin distillate from the 137 Crude Unit, as well as Light Cycle Oil from the 1232 FCCU.

Distillate feed is pumped through a series of preheat exchangers in order to recover heat and prepare the feed for treating. The feed, as well as a stream of hydrogen from 1332 Reformer and recycled hydrogen from 231, is heated in the charge heater. The hydrogen and distillate combine and enter two parallel reactors where the sulfur in the distillate is converted to H2S. The reactor effluent is cooled and sent through two separators which separate the distillate from the gas stream containing hydrogen and H2S. The gas stream leaves the separators and enters the Recycle Gas Amine Absorber where H2S is removed using Amine. The hydrogen is recycled through the system.

The liquid from both separators is pumped to the Stripper where both H2S and water are removed, and the flash point is controlled. Under normal operation, the product stream is mixed with 859 Hydrotreater USLD product, treated for pour and rust, and pumped to a Tank Farm.

Gasoline and overhead vapors are products taken off the Stripper overhead. The Stripper overhead gas is treated with Amine in the Fuel Gas Amine Absorber to remove H2S before being sent to the J-405 fuel gas compressor and eventually to C-703 recovery compressor. The gasoline is sent to a 1332 Reformer charge tank.

Fresh (lean) Amine to GFU 231 is supplied by Point Breeze 867 Unit. Two rich Amine streams from the Fuel Gas Absorber and the Recycle Gas Absorber are sent back to 867 where they are treated to remove H2S.

ISOM Unit (331)

The unit uses a Platinum Hydroisomerization Catalyst, under a hydrogen atmosphere in a fixed bed reactor, to complete the conversion of normal butane to isobutane. The butane feed for this unit comes from the sidedraw stream off the 431 Deisobutanizer Tower, and the defluorinated butane stream from the 433 Unit. As the ISOM feedstock must be essentially free of contaminants, butane dryers are used to remove residual moisture and sulfur from the feed stream.

The hydrogen/butane feed stream is injected with a small amount of chloride catalyst promoter and fed though a reactor preheat train, where it exchanges heat with the reactor effluent. After the reactor effluent passes through the preheat exchangers, it is fed to the stabilizer tower, where the isomerate product is separated from the hydrogen and light hydrocarbons. The hot isomerate is usually routed directly to the 431 DIB Tower, however it can be cooled and stored in the North Butane Tank Field. The stabilizer off-gas is routed to a scrubber, where circulating caustic neutralizes the hydrochloric acid generated in the reaction.

Light Ends Unit (431)

Butane feed enters a Deisobutanizer Tower (DIB), which fractionates the feed into isobutane, normal butane, and a bottoms stream containing pentanes and heavier hydrocarbons. The DIB tower contains four beds of packing material and no trays. Pumps transfer material from the DIB Feed Tank to the Feed/Bottoms Exchangers before entering the DIB tower. Once the feed leaves the tubeside of an exchanger, it enters the tower between the third and fourth beds. Raw material fed directly from the 331 ISOM stabilizer bypasses the preheaters and is injected below the top bed. DIB bottoms are cooled and normally sent to the Schuykill River Tank Farm for use in gasoline blending. The DIB sidedraw stream is pressured out of the tower through condensers, which is eventually transferred to the 331 ISOM Feed Tank. Overhead material from the DIB is condensed and then routed to the Reflux Drum. A chromatograph is provided to monitor the composition of all product streams.

Section 1. - A description of the stream and piping diagrams (actual flare connections are attached).

Below is a description of the scope in identifying flare connections.

Flare headers were walked down in the field and matched up with the Process and Instrument Diagrams (P& ID's). All connections to the flare headers were analyzed and logged into spread sheets for that flare. Connections that were found and deemed unnecessary were either physically divorced from the flare by a blind, or the valve at the flare header was closed and a car seal was placed on that valve. The AMP for the 1231/1232 Unit Plant Flare system includes approximately 455 valves with car seals. In general, car-sealed valves will only be opened for special maintenance activities such as a shutdown. These car-sealed valves will be monitored monthly to verify that the valves have not been opened and that the seals are still intact. Valves that are found to have broken seals will be reported in our semiannual flare report required by the Consent Decree. Valves that have car seals broken to support maintenance activities (such as preparing an exchanger for maintenance) will not be reported in the semiannual report. Those car seals will be replaced when the maintenance activity is completed.

The attached spread sheets have a line by line analysis of the flare connection on the 1231/1232 Unit Flare system.

Section 2. - A statement confirming no crossover or sour gas entry points.

There are no crossovers or entry points where H2S can be introduced into the 1231/1232 Plant Flare System.

As noted previously, with the exception of the 433 Unit, the 1231/1232 Plant Flare System services the entire Girard Point side of the Philadelphia Refinery and this flare system is isolated from both the 433 Unit Flare and all other Point Breeze flare systems.

There are a total of 19 sample points where a minimal volume of H2S is vented back to the flare as part of the sampling process (calculations of SO2 from these sample points, required under Appendix H of the Consent Decree, are included as a separate spread sheet). Each of these connections are individually listed in Section 3 and Section 4, and all sample results are included with this summary document.

Section 3. - An explanation of conditions that ensure low emission rates. On the attached spread sheets there are line by line listings of the flare connections. A summary of the connections is below.

Fluidized Catalytic Cracking Unit (1232) Steamdown Header to the Flare

Refer to the spread sheet for the line by line analysis. For the Unit 1232 Steamdown Header portion of the 1231/1232 Plant Flare system, there are 107 connections. Of the 107 connections, 105 have been car-sealed closed. Of the remaining 2 components, both are fuel gas connections.

The item numbers below can be used to locate the item on the spread sheet.

- Item #'s 2-106 are car-sealed closed. In certain circumstances, where operationally appropriate, a group of maintenance vents were isolated by using a single car-seal.

- Item #'s 1 and 107 are fuel gas connections that originate from a common mix drum with an Air Management Services certified CEM that monitors H2S. Continuous monitoring with this certified CEM will be the compliance monitoring method.

Fluidized Catalytic Cracking Unit (1232) "Cat" Recovery Side Flare Header

Refer to the spread sheet for the line by line analysis. For the Unit 1232 "Cat" Recovery Side Flare Header portion of the 1231/1232 Plant Flare system, there are 70 connections. Of the 70 connections; 33 are either car-sealed closed or have been taken out-of-service (OOS) and blinded/capped, 16 are pressure relief valves, 11 are seal pot connections and 1 involves an exempt (steam) source. Of the remaining 9 connections: 2 represent analyzer vents containing H2S streams of <20 ppm each, 2 are bypass valves containing H2S streams of <20 ppm each, 2 are pressure control valves, 2 are analyzer vents containing H2S streams of >162 ppm each, and 1 is an analyzer vent containing an H2S stream between 20-100 ppm..

The item numbers below can be used to locate the item on the spread sheet.

- Item #'s 7, 9, 11, 13, 17, 20, 21, 23, 27, 28, 31-34, 36-41, 59-66, 68 and 69 are car-sealed closed. Item #'s 2, 35, and 52 have been taken OOS and capped/blinded.

- Item #'s 6, 8, 10, 12, 16, 18, 19, 22, 24, 29, 51, 53, 55-57, and 67 are pressure relief valves. According to paragraph 50.b. of the Consent Decree, the combustion of gases generated as a result of relief valve leakage or other emergency malfunction are exempt from the requirements of 40 CFR 60.104(a)(1).

- Item #'s 3, 4, 5, 14, 15, 25, 26, and 42-45 are seal pots which are not designed to leak and operate under pressure between the barrier fluids. A failure of the seal pot would be similar to a relief valve failure.

- Item # 70 is a steam valve which is exempt from monitoring.

- Item #'s 48 and 50 represent analyzer vents each containing H2S streams less than 20 ppm. Relative to the E-304 Bottoms BB Analyzer Vent (#48), the average of 14 samples was 2.9 ppm H2S. The average of 14 samples concerning the Deethanizer Bottoms PP analyzer Vent (#50) was <1 ppm H2S. All sample results are included.

- Item #'s 30 and 54 are bypass valves each containing H2S streams less than 20 ppm. Sample results (included) for these stream were both <3 ppm H2S.

- Item #'s 1 and 58 are pressure control valves that may relieve pressure to the flare during a malfunction. Both pressure controllers are designed and set to relieve overpressure from a malfunction prior to the emergency relief valves opening to the flare. Pressure controllers are utilized in the same fashion as emergency relief valves, however provide the added benefit of a more stable overpressure relief with the ability to avoid any potential reseating problems that can arise with emergency relief valves. Both streams contain greater than 162 ppm H2S. Item #1 is the F-103 pressure controller and item #58 is the pressure controller for the E-201 Absorber. Both control valves are fully instrumented and the data collection system will flag when a malfunction causes these valves to open to the flare. When either of these valves open up to the flare, Sunoco will make a determination using material balances and engineering judgment to determine if the 500 lbs of SO2 standard was exceeded. In the event that standard is exceeded, all required reports will be submitted, and the event will be treated as a hydrocarbon flaring incident that requires a root cause analysis under the Consent Decree.

- Item #'s 46 and 47 represent analyzer vents each containing H2S streams > 162 ppm. However, the contribution of SO2 from these sources are minimal and the total SO2 emissions estimated from purging each sample point to the flare are well under the 100 lbs/day allowed under Appendix H of the Consent Decree.

- Item #49 is an analyzer vent containing an H2S stream between 20-100 ppm H2S. This is the T-9 Bottoms BB vent and the contribution of SO2 from this source is minimal with the total SO2 emissions estimated from purging each sample point to the flare is well under the 100 lbs/day allowed under Appendix H of the Consent Decree.

Fluidized Catalytic Cracking Unit (1232) CO Boiler Flare Header

Refer to the spread sheet for the line by line analysis. For the Unit 1232 CO Boiler Flare Header portion of the 1231/1232 Plant Flare system, there are 7 connections. Of the 7 connections, 1 has been car-sealed closed, 1 is a pressure relief valve and the 5 others represent flare vent latch valves.

The item numbers below can be used to locate the item on the spread sheet.

- Item # 2 is car sealed closed.

- Item # 1 is a pressure relief valve. According to paragraph 50.b. of the Consent Decree, the combustion of gases generated as a result of relief valve leakage or other emergency malfunction are exempt from the requirements of 40 CFR 60.104(a)(1).

- Item #'s 3-7 are flare vent latch valves associated with the 1232 CO Boiler. Of the five valves only one (#5) is associated with H2S in excess of 162 ppm; for the other four latch valves, sour gas concentrations typically range from 20-100 ppm H2S. Latch valves are a type of pressure control valve that may relieve pressure to the flare during a malfunction. Pressure controllers are designed and set to relieve overpressure from a malfunction prior to the emergency relief valves opening to the flare. The item #5 control valve is instrumented and the refinery data collection system will flag when a malfunction causes this valve to open to the flare. When this valve opens up to the flare, Sunoco will make a determination using material balances and engineering judgment to determine if the 500 lbs of SO2 standard was exceeded. In the event that standard is exceeded, all required reports will be submitted, and the event will be treated as a hydrocarbon flaring incident that requires a root cause analysis under the Consent Decree. Regarding the other four latch valves, operators are currently able to determine when these valves trip using various other means (e.g. alarms, flow monitors etc.).

Fluidized Catalytic Cracking Unit (1232) T-9 Area / E-209 Flare Header

Refer to the spread sheet for the line by line analysis. For the Unit 1232 T-9 Area / E-209 Flare Header portion of the 1231/1232 Plant Flare system, there are 9 connections. Of the 9 connections, 5 have been car-sealed closed, 1 is a pressure relief valve and the remaining three are associated with the Debutanizer Overhead Condenser Vent (2) and the Debutanizer Drum Vent (1).

The item numbers below can be used to locate the item on the spread sheet.

- Item #'s 1-4 and 9 are car-sealed closed.

- Item # 5 is a pressure relief valve. According to paragraph 50.b. of the Consent Decree, the combustion of gases generated as a result of relief valve leakage or other emergency malfunction are exempt from the requirements of 40 CFR 60.104(a)(1).

- Item #'s 6 and 7 are vent valves associated with the Debutanizer Overhead Condenser Vent and item #8 is associated with the Debutanizer Drum Vent. Sample results (included) for these three connections are all less than 1 ppm H2S.

Fluidized Catalytic Cracking Unit (1232) Deethanizer Flare Header

Refer to the spread sheet for the line by line analysis. For the Unit 1232 Deethanizer Flare Header portion of the 1231/1232 Plant Flare system, there are 12 connections. Of the 12 connections, 5 are car-sealed closed, 4 are seal pot connections, 2 are associated with drum flare vents and 1 is a pressure relief valve.

The item numbers below can be used to locate the item on the spread sheet.

- Item #'s 2, 4, 5, 7 and 9 are car-sealed closed.

- Item #'s 1, 3, 6, and 8 are seal pots which are not designed to leak and operate under pressure between the barrier fluids. A failure of the seal pot would be similar to a relief valve failure.

- Item #'s 10 and 11 are drum flare vent valves. Item #10 is associated with the Deethanizer Reflux Drum and Item #11 is associated with the Feed Surge Drum. In all stream samples collected for these two connections, H2S was never detected (0 ppm).

- Item # 12 is a pressure relief valve. According to paragraph 50.b. of the Consent Decree, the combustion of gases generated as a result of relief valve leakage or other emergency malfunction are exempt from the requirements of 40 CFR 60.104(a)(1).

Unit 8733 Flare Header to the 1232 Flare

Refer to the spread sheet for the line by line analysis. For the Unit 8733 Flare Header portion of the 1231/1232 Plant Flare system, there are 5 connections. Of the 5 connections, 4 have been either car-sealed closed or taken out-of-service and capped/blinded, and the other is a pressure control valve associated with the Reflux Accumulator Pressure Control Vent.

The item numbers below can be used to locate the item on the spread sheet.

- Item #'s 2, 3 and 5 are car-sealed closed and Item # 4 has been taken out-of-service and capped/blinded.

- Item # 1, associated with the Reflux Accumulator Pressure Control Vent valve, is a pressure control valve that may relieve pressure to the flare during a malfunction. This connection is associated with a sour gas stream. Pressure controllers are designed and set to relieve overpressure from a malfunction prior to the emergency relief valves opening to the flare. This control valve is instrumented and the refinery data collection system will flag when a malfunction causes these valves to open to the flare. When this valve opens up to the flare, Sunoco will make a determination using material balances and engineering judgment to determine if the 500 lbs of SO2 standard was exceeded. In the event that standard is exceeded, all required reports

will be submitted, and the event will be treated as a hydrocarbon flaring incident that requires a root cause analysis under the Consent Decree.

Unit 531 V-10001 Mix Drum Flare Header

Refer to the spread sheet for the line by line analysis. For the Unit 531 V-10001 Mix Drum Flare Header portion of the 1231/1232 Plant Flare system, there are 11 connections. Of the 11 connections, 6 are pressure relief valves, 4 are either car-sealed closed or have been taken out-of-service and blinded/capped, and 1 is a fuel gas connection.

The item numbers below can be used to locate the item on the spread sheet.

- Item #'s 1, 2, 3, 6, 7, and 9 are pressure relief valves. According to paragraph 50.b. of the Consent Decree, the combustion of gases generated as a result of relief valve leakage or other emergency malfunction are exempt from the requirements of 40 CFR 60.104(a)(1).

- Item #'s 4, 8 and 11 are car-sealed closed. Item # 5 has been taken out-of-service and capped/blinded.

- Item # 10 is a fuel gas connection that originates from a common mix drum with an Air Management Services certified CEM that monitors H2S. Continuous monitoring with this certified CEM will be the compliance monitoring method.

Unit 531 V-10001 Mix Drum Blow-down Flare Header

Refer to the spread sheet for the line by line analysis. For the Unit 531 V-10001 Mix Drum Blow-down Flare Header portion of the 1231/1232 Plant Flare system, there are 2 connections. Of the 2 connections, 1 is car-sealed closed and the other represents an exempt liquid stream.

The item numbers below can be used to locate the item on the spread sheet.

- Item #2 is car sealed closed.

- Item #1 represents the liquid level control valve to the blow-down to Drum UV-1010 and is exempt because it is a liquid stream.

Unit 531 Flare Header to the 1232 Flare Continuous / Intermittent Relief Systems

Refer to the spread sheet for the line by line analysis. For the Unit 531 Flare Header Continuous / Intermittent Relief Systems portion of the 1231/1232 Plant Flare system, there are 4 connections. Of the 4 connections, 2 are car-sealed closed, 1 is a pressure relief valve and the other is involved with an exempt stream (steam).

The item numbers below can be used to locate the item on the spread sheet.

- Item #'s 2 and 4 are car-sealed closed.
- Item # 3 is a pressure relief valve. According to paragraph 50.b. of the Consent Decree, the combustion of gases generated as a result of relief valve leakage or other emergency malfunction are exempt from the requirements of 40 CFR 60.104(a)(1).
- Item #1 is a steam line connection, thus exempt from monitoring.

Unit 531 Sweet Gas PV-795 Control Valve to the 1232 Flare

Refer to the spread sheet for the line by line analysis. For the Unit 531 Sweet Gas PV-795 Control Valve portion of the 1231/1232 Plant Flare system, there are 2 connections. Of the 2 connections, 1 is car-sealed closed and the other is a pressure control valve associated with the C-2 Absorber.

The item numbers below can be used to locate the item on the spread sheet.

- Item # 2 is car-sealed closed.
- Item #1 is a pressure control valve associated with the C-2 Absorber which is intermittently activated (estimated 100 times per year). Samples of the associated gas stream (included) averaged less than 20 ppm H2S thus are exempt. In addition, this control valve is fully instrumented and the refinery data collection system records the valve position.

Discussion of H2S Levels in the 1732 / 1733 Units

The following 8 sections contain the Unit 1732/1733 contributions to the 1231/1232 flare system. Overall, the nature of the upstream processes dictate that sulfur not be present in their feed streams. Units 1732 and 1733 are ultimately fed by the Unit 1332 and 860 Reformers. Feed to 1332 and 860 Reformers are hydrotreated to convert all the organic sulfur molecules to H2S and then the feed is stripped to remove the H2S prior to feeding the reformers. Accordingly, the feed naphtha to 1332 and 860 is, on average, less than 0.1 ppmw sulfur. This low level of sulfur in the feed translates into low levels of sulfur both in the 1732 benzene rich feed stream and the 1732 benzene product feeding the 1733 Cumene Unit.

Regarding Unit 1732, the feed streams from the reforming units contain less than 0.1 ppm H2S. This unit employs a liquid/liquid extraction process using tetraethylene glycol with no catalyst reactions occurring. Regarding Unit 1733, the PP feed stream from the Catalyst Cracking Unit (1232) is amine and caustic treated to remove 99% of the sulfur

species. The PP feed stream is then fed to this unit where it is treated through a copper oxide / zinc oxide catalyst bed that adsorbs any remaining sulfur. Hence, negligible amounts of H2S are present when the PP feed enters the cumene unit reactors and towers. Samples are routinely collected of the PP feed stream entering the unit with the average sulfur content less than 1 ppmw.

As described above, the feed streams to these units contain negligible amounts of H2S. Downstream processes in both units do not involve the generation of H2S. Finally, samples have historically and continue to show negligible H2S concentrations throughout these units (< 5 ppm).

Unit 1732 Steamdown Flare Header to UV-698

Refer to the spread sheet for the line by line analysis. For the Unit 1732 Steamdown Flare Header to UV-698 portion of the 1231/1232 Plant Flare system, there are 48 connections. Of the 48 connections, 46 are car-sealed closed or have been taken out-of-service and blinded/capped, 1 is involved with an exempt stream (liquid), and the other is associated with the UV-16 Solvent Regenerator Ejector vent.

The item numbers below can be used to locate the item on the spread sheet.

- Item #'s 3, 6, 7, 10, 15, 16, 19, 21, 27, 29, 30, and 36-39, are car-sealed closed. Item #'s 1, 2, 4, 5, 8, 9, 11-14, 17, 18, 20, 22-26, 28, 31-34, 40, 41, and 43-48 have been taken out-of-service and capped/blinded.

- Item #42 is a liquid stream connection, thus exempt from monitoring.

- Item #35 is a valve associated with the UV-16 Solvent Regenerator vent and, based upon engineering judgment, would contain negligible amounts (<5 ppm) of H2S.

Unit 1732 UV-8 Flare Header to UV-1010

Refer to the spread sheet for the line by line analysis. For the Unit 1732 UV-8 Flare Header to UV-1010 portion of the 1231/1232 Plant Flare system, there are 43 connections. Of the 43 connections, 15 are pressure relief valves, 13 are car-sealed closed or have been taken out-of-service and blinded/capped, 9 represent sampling stations, 5 are associated with receiver vents, and 1 is associated with an aromatics receiver pump.

The item numbers below can be used to locate the item on the spread sheet.

- Item #'s 2, 5, 11, 12, 14, 16, 17, 18, 22, 26 and 38-42 are pressure relief valves. According to paragraph 50.b. of the Consent Decree, the combustion of gases generated as a result of relief valve leakage or other emergency malfunction are exempt from the requirements of 40 CFR 60.104(a)(1).

- Item #'s 3, 4, 6, 9, 13, 15, 19, 20, 23, and 24 are car-sealed closed. Item #'s 1, 8, and 21 have been taken out-of-service and capped/blinded.

- Item #'s 25, and 27-34 are sampling stations in which all samples (included), are less than 5 ppm H2S.

- Item #'s 7, 10, and 35-37 are all associated with receiver vents in which all sample results (included) are less than 5 ppm H2S.

- Item # 43 is associated with the unit Aromatics Recovery Pump in which all samples (included) are less than 5 ppm H2S.

Unit 1732/1733 Miscellaneous Connections to UV-698

Refer to the spread sheet for the line by line analysis. For the Unit 1732/1733 Miscellaneous Connections to UV-698 portion of the 1231/1232 Plant Flare system, there are 2 connections. Of the 2 connections, 1 is car-sealed closed and the other is associated with an exempt (liquid) stream.

The item numbers below can be used to locate the item on the spread sheet.

- Item # 1 is car-sealed closed.

- Item #2 is a liquid stream connection, thus exempt from monitoring.

Unit 1733 CU-V18 Flare Header to UV-1010

Refer to the spread sheet for the line by line analysis. For the Unit 1733 CU-V18 Flare Header to UV-1010 portion of the 1231/1232 Plant Flare system, there are 94 connections. Of the 94 connections, 41 are car-sealed closed or have been taken out-of-service and blinded/capped, 36 are pressure relief valves, 11 represent sampling stations, 3 are related to pressure control valves, 2 related to miscellaneous vents and 1 is a seal pot.

The item numbers below can be used to locate the item on the spread sheet.

- Item #'s 1, 3, 5, 7, 9, 11, 15, 18, 22, 24, 26, 29, 30, 32, 34, 38, 40, 42, 44, 46, 48, 50, 52-54, 57, 59, 63, 65, 68, 71, 77, 79, 80, 84 and 87-90 are car-sealed closed. Item #'s 16 and 55 have been taken out-of-service and capped/blinded.

- Item #'s 2, 4, 6, 8, 10, 14, 17, 21, 23, 25, 31, 33, 37, 39, 41, 43, 45, 47, 49, 51, 56, 58, 62, 64, 67, 70, 73-76, 78, 81-83, 91 and 92 are pressure relief valves. According to paragraph 50.b. of the Consent Decree, the combustion of gases generated as a result

of relief valve leakage or other emergency malfunction are exempt from the requirements of 40 CFR 60.104(a)(1).

- Item #'s 12, 13, 19, 20, 27, 28, 66, 69, 72, 93 and 94 are sampling stations / sampling vents in which all samples (included) are less than 5 ppm H2S.

- Item #'s 36, 85 and 86 are pressure control valves in which H2S samples (included), revealed no or negligible (< 1.0 ppm) H2S streams.

- Item #'s 60 and 61 represent miscellaneous vents in which H2S samples (included), revealed no or negligible (< 1.0 ppm) H2S streams.

- Item #35 is a seal pot.

Unit 1733 Steamdown Flare Header to UV-698

Refer to the spread sheet for the line by line analysis. For the Unit 1733 Steamdown Flare Header to UV-698 portion of the 1231/1232 Plant Flare system, there are 64 connections. Of the 64 connections, 61 are car-sealed closed or have been taken out-of-service and blinded/capped, and the other 3 represent miscellaneous connections further described below.

The item numbers below can be used to locate the item on the spread sheet.

- Item #'s 6, 13-15, 18-21, 24-26, 32, 33, 35, 40, 43-46, and 49-56 are car-sealed closed. Item #'s 1-5, 7-12, 16, 17, 22, 23, 27-30, 36-38, 41, 42, 47, 48, and 57-64 have been taken out-of-service and capped/blinded.

- Item #'s 31, 34 and 39 represent miscellaneous connections in which all sample results (included) revealed no or negligible levels of H2S. Item # 31 is a PP Feed Sample Station. Item # 34 is a Cumene Receiver vent and Item # 39 is a valve associated with the Degassing Drum.

Unit 1733 Seal Pot Vents

Refer to the spread sheet for the line by line analysis. For the Unit 1733 Seal Pot Vents portion of the 1231/1232 Plant Flare system, there are 34 connections. Of the 34 connections, 31 are seal pots and the other 3 are sampling stations.

The item numbers below can be used to locate the item on the spread sheet.

- Item #'s 1-11, and 15-34 are all seal pots. As previously discussed, seal pots are not designed to leak and operate under pressure between the barrier fluids. A failure of the seal pot would be similar to a relief valve failure.

- Item #'s 12-14 are sampling stations in which all samples (included) averaged < 5 ppm H2S in the streams.

Unit 1733 PP Bullets Flare Header

Refer to the spread sheet for the line by line analysis. For the Unit 1733 PP Bullets Flare Header portion of the 1231/1232 Plant Flare system, there are 8 connections. Of the 8 connections, 4 are car-sealed closed, 2 are pressure relief valves and 2 are associated with the truck unloading station vents.

The item numbers below can be used to locate the item on the spread sheet.

- Item #'s 1 and 6-8 are car-sealed closed.

- Item #'s 2 and 3 are pressure relief valves. According to paragraph 50.b. of the Consent Decree, the combustion of gases generated as a result of relief valve leakage or other emergency malfunction are exempt from the requirements of 40 CFR 60.104(a)(1).

- Item #'s 4 and 5 are vents associated with the unit truck unloading station in which all samples (included) revealed no or negligible (< 1 ppm) levels of H2S.

Unit 1733 CU-V8 Flare Header

Refer to the spread sheet for the line by line analysis. For the Unit 1733 CU-V8 Flare Header portion of the 1231/1232 Plant Flare system, there is 1 connection which is a pressure control valve.

The item numbers below can be used to locate the item on the spread sheet.

- Item # 1 is a pressure control valve associated with the Depropanizer Overhead Receiver in which all samples (results included) revealed 0 ppm of H2S in this stream.

Unit 1332 Blowdown Header to UV-1010

Refer to the spread sheet for the line by line analysis. For the Unit 1332 Blowdown Header portion of the 1231/1232 Plant Flare system, there are 71 connections. Of the 71 connections, 65 are either car-sealed closed or have been taken out-of-service and blinded/capped, 5 are pressure relief valves and 1 is a fuel gas connection.

The item numbers below can be used to locate the item on the spread sheet.

- Item #'s 2, 5-7, 9-16, 18-23, 25-35, 37-42, 46, 47, 51, 53-61, and 63-71 are car-sealed closed. Item #'s 1, 3, 4, 36, 43-45, 50 and 52 have been taken out-of-service and capped/blinded.

- Item #'s 8, 17, 24, 48 and 49 are pressure relief valves. According to paragraph 50.b. of the Consent Decree, the combustion of gases generated as a result of relief valve leakage or other emergency malfunction are exempt from the requirements of 40 CFR 104(a)(1).

- Item # 62 is a fuel gas connection with an Air Management Services certified CEM that monitors H2S. Continuous monitoring with this certified CEM will be the compliance monitoring method.

Unit 1332 Flare Header HP-27-G

Refer to the spread sheet for the line by line analysis. For the Unit 1332 Flare Header HP-27-G portion of the 1231/1232 Plant Flare system, there are 64 connections. Of the 64 connections, 28 are either car-sealed closed or have been taken out-of-service and blinded/capped, 6 are pressure relief valves, 5 are associated with exempt streams, 3 are seal pots, 2 are fuel gas connections and 1 is associated with an analyzer building calibration gas vent. Of the remaining 19 components: 10 are vent valves associated with unit compressors; 4 are manual valves associated with reactor catalyst sample chamber vents; 3 are Dopak sample station manual valves associated with vessel 603; one is a Dopak sampling station manual valve associated with the P-3 Hydrobon Charge vent; and 1 is a manual valve on the FRC-708 sampling station.

The item numbers below can be used to locate the item on the spread sheet.

- Item #'s 2, 4, 6, 8-11, 13, 14, 28, 37-39, 43, 44, 46, 58, and 59 are car-sealed closed. Item #'s 25, 45, 47-50, and 54-57 have been taken out-of-service and capped/blinded.

- Item #'s 1, 3, 24, 26, 27, and 51 are pressure relief valves. According to paragraph 50.b. of the Consent Decree, the combustion of gases generated as a result of relief valve leakage or other emergency malfunction are exempt from the requirements of 40 CFR 60.104(a)(1).

- Item #'s 5, 7, 12, 36 and 64 contain an exempt stream (e.g. liquid, steam etc.).

- Item #'s 60 through 62 are seal pots.

- Item #'s 52 and 53 are fuel gas connections with an Air Management Services certified CEM that monitors H2S. Continuous monitoring with this certified CEM will be the compliance monitoring method.

- Item # 33 is an analyzer building calibration gas vent associated with AH-739. Manufacturer specification sheets revealed no/negligible levels of H2S in the stream.

- Item #'s 15-22 are 38C-703 Compressor seal vent connections, which are all crank or packing vents under a nitrogen purge on the flare header side of the packing. During normal operation, tight seals prevent process gas leaks through these connections to the 1231/1232 flare system. Engineering calculations reveal that the contribution of SO2 from these sources at a common, downstream sampling point during normal operation is minimal. However, in order to model worst case conditions, Sunoco assumed a total packing failure of the connection with the highest H2S concentration at the maximum flow rate. Assuming these worst case conditions, the total contribution of SO2 would never exceed 20.26 lbs/day. Accordingly, these connections were placed onto the *de minimus* source list (spreadsheet of all sources attached) and the total of all *de minimus* sources is well below the 100 lbs/day allowed under Appendix H of the Consent Decree.

- Item #'s 34 and 35 are manual vent valves associated with the C-400 compressors located within the reformer side of the unit. Sampling has historically shown and continue to show < 2 ppm H2S in the reformer side of the 1332 unit.

- Item #'s 29-32 are manual valves associated with the V-400 through V-403 reactor catalyst sample chamber vents. These valves, as described in the "bullet" above, are located within the reformer side of the unit and H2S levels do not exceed 2 ppm.

- Item #'s 40-42 are Dopak sample station manual valves associated with vessel 603. These connections are also located within the reformer side of the unit and H2S concentrations do not exceed 2 ppm.

- Item # 63 is a Dopak sampling station manual valve associated with the P-3 Hydrobon Charge vent. At this point within the unit, the H2S has already been stripped-off and only low levels of mercaptan sulfur would be present here.

- Item # 23 is a manual valve on the FRC-708 sampling station. Catalyst sampling has shown < 1 ppm H2S associated with this connection.

Unit 1332 Steamdown Header to UV-698

Refer to the spread sheet for the line by line analysis. For the Unit 1332 Steamdown Header to UV-698 portion of the 1231/1232 Plant Flare system, there are 33 connections. Of the 33 connections, 27 are either car-sealed closed or have been taken out-of-service and blinded/capped, 4 are associated with unconnected lines, 1 is a manual valve associated with a depropanizer overhead sampling station and 1 is a specific gravity analyzer.

The item numbers below can be used to locate the item on the spread sheet.

- Item #'s 22-26 and 30-33 are car-sealed closed. Item #'s 2-7, 9-18, 27 and 29 have been taken out-of-service and capped/blinded.

- Item #'s 1 and 19-21 are associated with lines that are not connected. .

- Item #8 is a manual valve associated with the V-601 depropanizer overhead sampling station. H2S levels during normal operation would not exceed 2 ppm.

- Item # 28 is a specific gravity analyzer that is located within the reformer section of the unit. As discussed in the previous section, H2S levels in this area do not exceed 2 ppm.

Unit 433 North Butane Field Flare Header

Refer to the spread sheet for the line by line analysis. For the Unit 433 North Butane Field Flare Header portion of the 1231/1232 Plant Flare system, there are 41 connections. Of the 41 connections, 21 are either car-sealed closed or have been taken out-of-service and blinded/capped, 2 are seal pots, and 16 are associated with sphere pressure control valves or associated alarm testing vent lines and/or associated by-pass lines. There is also 1 pressure relief valve and 1 pressure control valve associated with V-53 (Fresh Additive Drum PCV).

The item numbers below can be used to locate the item on the spread sheet.

- Item #'s 1-6, 17-23, 39 and 41 are car-sealed closed. Item #'s 7, 10-13, and 16 have been taken out-of-service and capped/blinded.

- Item #'s 14 and 15 are seal pots.

- Item #'s 8, 9, 24-37 are all associated with butane spheres. These connections are either butane sphere pressure control valves, by-pass line valves or alarm testing vent lines. All sample results (included) averaged less than 20 ppm H2S for each sphere. In most cases, the sample result showed 0 ppm H2S.

- Item # 38 is a pressure relief valve. According to paragraph 50.b. of the Consent Decree, the combustion of gases generated as a result of relief valve leakage or other emergency malfunction are exempt from the requirements of 40 CFR 60.104(a)(1).

- Item # 40 is a pressure control valve associated with the V-53 Fresh Additive Drum. There is no H2S associated with this stream.

Unit 137 Flare Header

Refer to the spread sheet for the line by line analysis. For the Unit 137 Flare Header portion of the 1231/1232 Plant Flare system, there are 41 connections. Of the 41

connections, 26 are either car-sealed closed or have been taken out-of-service and blinded/capped, 11 are pressure relief valves, 2 are seal pots, 1 is associated with an exempt stream (steam) and 1 is a pressure control valve.

The item numbers below can be used to locate the item on the spread sheet.

- Item #'s 2-8, 11, 12, 16, 18, 20, 23-27, 33 and 41 are car-sealed closed. Item #'s 15, 31, 32, 34, 35, 36, and 39 have been taken out-of-service and capped/blinded.

- Item #'s 1, 9, 10, 13, 14, 17, 19, 30, 37, 38 and 40 are pressure relief valves. According to paragraph 50.b. of the Consent Decree, the combustion of gases generated as a result of relief valve leakage or other emergency malfunction are exempt from the requirements of 40 CFR 60.104(a)(1).

- Item #'s 28 and 29 are seal pots.

- Item # 21 is associated with an exempt source (steam).

- Item # 22 is a pressure control valve that may relieve pressure to the flare during a malfunction. This connection is associated with a sour gas stream. Pressure controllers are designed and set to relieve overpressure from a malfunction prior to the emergency relief valves opening to the flare. This control valve is instrumented and the refinery data collection system will flag when a malfunction causes these valves to open to the flare. When this valve opens up to the flare, Sunoco will make a determination using material balances and engineering judgment to determine if the 500 lbs of SO2 standard was exceeded. In the event that standard is exceeded, all required reports will be submitted, and the event will be treated as a hydrocarbon flaring incident that requires a root cause analysis under the Consent Decree.

Unit 231 Flare Header

Refer to the spread sheet for the line by line analysis. For the Unit 231 Flare Header portion of the 1231/1232 Plant Flare system, there are 15 connections. Of the 15 connections, 8 are either car-sealed closed or have been taken out-of-service and blinded/capped, 2 are pressure relief valves, 2 are associated with compressor vents, 1 is a fuel gas knockout drum condensate vent, 1 is associated with an exempt stream (steam) and 1 is a pressure control valve.

The item numbers below can be used to locate the item on the spread sheet.

- Item #'s 2, 5, 6, 7, 9, and 11 are car-sealed closed. Item #'s 13 and 14 have been taken out-of-service and capped/blinded.

- Item #'s 1 and 10 are pressure relief valves. According to paragraph 50.b. of the Consent Decree, the combustion of gases generated as a result of relief valve leakage

or other emergency malfunction are exempt from the requirements of 40 CFR 60.104(a)(1).

- Item #'s 3 and 4 are compressor seal oil trap vents in which all samples collected (included) were not detected for H2S.

- Item # 15 is a fuel gas knockout drum condensate vent where an average of H2S samples collected (included) was 9 ppm.

- Item # 12 is associated with an exempt source (steam).

- Item # 8 is a pressure control valve which may relieve pressure to the flare during a malfunction. According to engineering judgment, the associated stream through this valve would contain between 20-100 ppm H2S. Pressure controllers are designed and set to relieve overpressure from a malfunction prior to the emergency relief valves opening to the flare. This control valve is instrumented and the refinery data collection system will flag when a malfunction causes these valves to open to the flare. When this valve opens up to the flare, Sunoco will make a determination using material balances and engineering judgment to determine if the 500 lbs of SO2 standard was exceeded. In the event that standard is exceeded, all required reports will be submitted, and the event will be treated as a hydrocarbon flaring incident that requires a root cause analysis under the Consent Decree

Unit 231 Blowdown and Pumpout Systems

Refer to the spread sheet for the line by line analysis. For the Unit 231 Blowdown and Pumpout Systems portion of the 1231/1232 Plant Flare system, there are 14 connections. Of the 14 connections, all are either car-sealed closed or have been taken out-of-service and blinded/capped.

The item numbers below can be used to locate the item on the spread sheet.

- Item #'s 3-13 are car-sealed closed. Item #'s 1, 2, and 14 have been taken out-of-service and capped/blinded.

Unit 331 ISOM Flare Header

Refer to the spread sheet for the line by line analysis. For the Unit 331 ISOM Flare Header portion of the 1231/1232 Plant Flare system, there are 99 connections. Of the 99 connections, 65 are either car-sealed closed or have been taken out-of-service and blinded/capped, 18 are pressure relief valves, 8 are valves associated with analyzer vents and sampling stations, 4 are valves associated with compressor vents/reliefs, 3 are seal pots and 1 is a valve associated with the hydrogen sweep of the flare header.

The item numbers below can be used to locate the item on the spread sheet.

- Item #'s 6, 9, 13, 14, 16, 17, 19, 22, 24, 26, 28, 37-43, 45, 47, 49-65, 67-76, 79, 80, 83-87, 91 and 95 are car-sealed closed. Item #'s 7, 10, 21, 31, 89, 90, 92, 97 and 98 have been taken out-of-service and capped/blinded.

- Item #'s 5, 8, 11, 15, 18, 23, 25, 27, 32, 33, 44, 46, 48, 77, 78, 88, 93 and 96 are pressure relief valves. According to paragraph 50.b. of the Consent Decree, the combustion of gases generated as a result of relief valve leakage or other emergency malfunction are exempt from the requirements of 40 CFR 60.104(a)(1).

- Item #'s 2, 29, 30, 35, 36, 66, 94 and 99 are valves associated with analyzer vents or sampling stations in which all samples collected (included) were 0 ppm H2S.

- Item #'s 3, 4, 12, and 20 are valves associated with compressor vents and reliefs in which all samples collected (included) were 0 ppm H2S.

- Item # 34, 81 and 82 are seal pots.

- Item # 1 is a valve associated with the hydrogen sweep of the flare header in which all samples collected (included) were 0 ppm H2S.

Unit 431 Flare Header

Refer to the spread sheet for the line by line analysis. For the Unit 431 Flare Header portion of the 1231/1232 Plant Flare system, there are 24 connections. Of the 24 connections, 22 are either car-sealed closed or have been taken out-of-service and blinded/capped and the remaining two are valves associated with sampling stations.

The item numbers below can be used to locate the item on the spread sheet.

- Item #'s 6-13, 15, 16, 18 and 19 are car-sealed closed. Item # s 1-5, and 20-24 have been taken out-of-service and capped/blinded.

- Item #'s 14 and 17 are valves associated with sampling stations in which all samples collected (included) were 1 ppm H2S or less.

#3 Boiler House Blowdown Flare Header

Refer to the spread sheet for the line by line analysis. For the #3 Boiler House Blowdown Flare Header portion of the 1231/1232 Plant Flare system, there are 5 connections. Of the 5 connections, 4 are either car-sealed closed or have been taken out-of-service and blinded/capped, and the remaining item is a fuel gas connection.

The item numbers below can be used to locate the item on the spread sheet.

- Item # 2 is car-sealed closed. Item #'s 3-5 have been taken out-of-service and capped/blinded.

- Item 1 is a fuel gas connection with an Air Management Services certified CEM that monitors H2S. Continuous monitoring with this certified CEM will be the compliance monitoring method. .

Section 4. - Supporting test results using H_2S monitoring

All connections, segregated within the 28 spreadsheets, are further identified below regarding one-time sampling and an indication if further sampling or other evaluative measures are proposed as part of this plan. Regarding one-time sampling, the arithmetic mean of the 7 or 14 samples collected are reported. Where connections are exempt from any future sampling activities, Sunoco has offered a specific explanation. These connections "exempt" from future sampling are summarized, by group, below:

- Car-sealed closed connections. These connections will be inspected monthly to verify that the valves have not been opened and that the seals are still in tact. Valves that are found to have broken seals will be reported in our semiannual flare report required by the Consent Decree. Valves that have car-seals broken to support maintenance activities will not be reported. Those car-seals will be replaced when the maintenance activity is completed.
- Pressure relief valves. According to paragraph 50.b. of the Consent Decree, the combustion of gases generated as a result of relief valve leakage or other emergency malfunction are exempt from the requirements of 40 CFR 60.104(a)(1).
- Out-of-service lines that are capped/plugged or were removed.
- Seal pots. These are safety systems with instrumentation that sense barrier fluid pressure. They are designed for no flow and are treated like relief valves.
- Exempt streams (e.g. steam and liquid connections, etc.)
- Connections in which one time sampling resulted in an average of less than 20 ppm H2S. As you will note, almost all of the connections in this category averaged less than 5 ppm H2S. Sunoco believes that all samples collected were representative of typical refinery operations. It should be mentioned that in all but a few isolated cases, sampling was performed to obtain an average H2S level in accordance with Appendix H. There were a few instances (each described below) where engineering knowledge of the process was used to determine the H2S level of the gaseous stream.

Connections meeting one of the above criteria will not be further addressed relative to any future sampling activities as a result of this monitoring plan. Those connections not exempt, as described above, are further identified in one of two Tables in Section 6/7. Table I lists pressure control valves that do not meet one of the above exemptions. Table II lists all other components that do not meet one of the above exemptions and are not pressure control valves.

Fluidized Catalytic Cracking Unit (1232) Steamdown Header to the Flare

No supporting test results are required for the Fluidized Catalytic Cracking Unit Steamdown Header connections as there are no streams that will use the one time sampling provisions under Appendix H. All but 2 connections from this area of the 1232 unit are car-sealed closed. Accordingly, no further sampling activities are proposed for these connections.

The remaining two connections (#'s 1 and 107 on the attached spreadsheet) originate from a refinery fuel gas mix drum that has an AMS certified CEMS that monitors H2S. These connections are further addressed in Table II of Section 6/7 as Item #'s 1 and 2.

Fluidized Catalytic Cracking Unit (1232) "Cat" Recovery Side Flare Header

Supporting test results are included for the following:

- E-304 Bottoms BB Analyzer Vent (average of 14 samples was 2.9 ppm H2S);
- Deethanizer Bottoms PP Analyzer Vent (average of 14 samples was < 1 ppm H2S);
- F-210 Caustic Accumulator Drum Vent (average of 14 samples was < 1 ppm H2S);
- 12AT667 Absorber Off-gas Analyzer Vent (average of 14 samples was < 1 ppm H2S);
- T-9 Bottoms BB Analyzer Vent (average of 14 samples was 83.15 ppm H2S); and
- F-208 Refrigeration Propane Receiver Vent (all 7 samples were 0 ppm H2S).
- F-210 Caustic Accumulator Drum Vent (average of 14 samples was < 1 ppm H2S).

Six of the above seven sampling events indicated not only less than 20 ppm H2S, but none exceeded 3 ppm H2S. Accordingly, no further sampling activities are proposed for these connections. The one connection with a sampling average greater than 20 ppm (T-9 bottoms – # 49 on the attached spreadsheet) is identified in Table II of Section 6/7 as Item # 3. There are also two other connections (#'s 46 and 47 on the attached spreadsheet) in which the H2S streams exceed 162 ppm. These connections are identified in Table II of Section 6/7 as Item #'s 4 and 5. However, the contribution of SO2 from these sources are minimal and the total SO2 emissions estimated from purging each sample point to the flare are well under the 100 lbs/day allowed under Appendix H of the Consent Decree.

There are two pressure control valves (#'s 1 and 58 on the attached spreadsheet) that contain streams greater than 162 ppm H2S. These valves are described in Section 3 and identified in Table I of Section 6/7 as Item #'s 1 and 2.

All other connections to the FCCU "Cat" Side Recovery portion of this unit are either car-sealed closed, pressure relief valves, taken OOS and capped/blinded, seal pots, or an exempt (steam) valve.

Fluidized Catalytic Cracking Unit (1232) CO Boiler Flare Header

No supporting test results are required for the FCCU CO Boiler Flare Header connections as there are no streams that will use the one time sampling provisions under Appendix H. One connection is car-sealed closed and one connection is a pressure relief valve. The other 5 connections are latch valves, which are a type of pressure control valve that may relieve to the flare in the event of a malfunction. All 5 latch valves are included in Table 1 of Section 6/7 as Item #'s 3 through 7.

Fluidized Catalytic Cracking Unit (1232) T-9 Area / E-209 Flare Header

Supporting test results are included for the C-235A/C Condensers and F-214 Debutanizer Drum Vent in which an average of 14 samples revealed 0.25 ppm H2S. Both of the above two sampling events indicated not only less than 20 ppm H2S, but did not exceed 1 ppm H2S. Accordingly, no further sampling activities are proposed for these connections.

All other connections from this area of the 1232 unit are either car-sealed closed or are pressure relief valves.

Fluidized Catalytic Cracking Unit (1232) Deethanizer Flare Header

Supporting test results are included for the following:

- V-2 Feed Surge Drum Vent (all 7 samples were 0 ppm H2S); and
- V-3 Deethanizer Reflux Drum Vent (all 14 samples were 0 ppm H2S).

Both of the above two sampling events indicated not only less than 20 ppm H2S, but none were detected at any level. Accordingly, no further sampling activities are proposed for these connections.

All other connections to the FCCU Deethanizer Flare Header portion of this unit are either car-sealed closed, are pressure relief valves or are seal pots.

Unit 8733 Flare Header

No supporting test results are required for the Unit 8733 Flare Header connections as there are no streams that will use the one time sampling provisions under Appendix H. The connections from this area of the unit are either car-sealed closed or taken OOS and capped/blinded. Accordingly, no further sampling activities are proposed for these connections.

The one connection (#1 on the attached spreadsheet) is a pressure control valve associated with a sour gas stream that only opens in the event of a malfunction. This valve is included in Table I of Section 6/7 as Item # 8.

Unit 531 V-10001 Mix Drum Flare Header

No supporting test results are required for the Unit 531 V-10001 Mix Drum Flare Header connections as there are no streams that will use the one time sampling provisions under Appendix H. All but 1 of these connections are either car-sealed closed, been taken OOS and blinded/capped, or are pressure relief valves. Accordingly, no further sampling activities are proposed for these connections.

The one connection (#10 on the attached spreadsheet) is a fuel gas connection that originates from a common mix drum with an Air Management Services certified CEM that monitors H2S. This connection is listed in Table II of Section 6/7 as Item #6.

Unit 531 V-10001 Mix Drum Blow-down

No supporting test results are required for the Unit 531 V-10001 Mix Drum Blow-down connections as there are no streams that will use the one time sampling provisions under Appendix H. The connections from this area of the 531 unit are either car-sealed closed or are exempt (liquid stream). Accordingly, no further sampling activities are proposed for these connections.

Unit 531 Flare Header to the 1232 Flare Continuous / Intermittent Relief Systems

No supporting test results are required for the Unit 531 Flare Header as there are no streams that will use the one time sampling provisions under Appendix H. The connections from this area of the 531 unit are either car-sealed closed, are pressure relief valves or are exempt (steam valve). Accordingly, no further sampling activities are proposed for these connections.

Unit 531 Sweet Gas PV-795 Control Valve

Supporting test results are included for the 531 Sweet Gas PC-795 Control Valve which averaged 15.1 ppm H2S over 14 samples and is subject to the <20 ppm H2S exemption. This control valve is intermittently activated (estimated 100 times per year) and is fully instrumented via the refinery data collection system. There is no further sampling activities proposed for this connection.

Unit 1732 Steamdown Flare Header to UV-698

No supporting test results are required for the Unit 1732 Steamdown Flare Header to UV-698 connections as there are no streams that will use the one time sampling provisions under Appendix H. The connections from this area of the 1732 Unit are either car-sealed closed, have been taken OOS and blinded/capped, or are exempt (liquid stream). One valve (#35 on the attached spreadsheet), associated with the UV-16 Solvent Regenerator vent, was not sampled. Based upon engineering knowledge, the gaseous stream through this connection would contain negligible (<5 ppm) of H2S. Accordingly, no further sampling activities are proposed for these connections.

Unit 1732 UV-8 Flare Header to UV-1010

Supporting test results are included for the following:

- 1732 Lean Solvent Dopak Sample (average of 7 samples was 1.1 ppm H2S);
- "A" Tower Benzene Bottoms Dopak Sample (average of 7 samples was < 1 ppm H2S);
- "B" Tower Benzene Bottoms Dopak Sample (average of 7 samples was < 1 ppm H2S);
- "A" Tower Benzene Product Dopak Sample (average of 7 samples was < 1 ppm);
- "B" Tower Benzene Product Dopak Sample (average of 6 samples was < 1 ppm H2S);
- 1732 Extractor Recycle Dopak Sample (average of 7 samples was 1.1 ppm H2S);
- P-40 Aromatics Pump Nitrogen Control/Pressure Sweep (all samples were 0 ppm H2S);
- UV-3 (Stripper Receiver), UV-4 (Extract Overhead) and UV-5 (water Receiver) (all samples were 0 ppm H2S); and
- UV-8 Knockout Drum (all samples were 0 ppm H2S).

All of the sampling performed on this part of the unit indicated not only less than 20 ppm H2S, but all values fell below 5 ppm. In addition, all other connections to the 1732 UV-8 Flare Header to UV-1010 are either car-sealed closed, are pressure relief valves, or have been taken OOS and capped/blinded. Accordingly, no further sampling activities are proposed for these connections.

Unit 1732/1733 Miscellaneous Connections to UV-698

No supporting test results are required for the Unit 1732/1733 Miscellaneous Connections to UV-698 as there are no streams that will use the one time sampling provisions under Appendix H. The connections from these miscellaneous areas of 1732/1733 are either car-sealed closed or are exempt (liquid stream). Accordingly, no further sampling activities are proposed for these connections.

Unit 1733 CU-V18 Flare Header to UV-1010

Supporting test results are included for the following:

- 1733 Depropanizer Overhead Dopak Sample (all 7 samples were 0 ppm H2S)
- CU-V18 Knockout Drum (all 14 samples were 0 ppm H2S);
- Deethanizer Dopak Sample Station (all 14 samples were 0 ppm H2S);
- Arsine Dopak Sample Vent (all 14 samples were 0 ppm H2S);
- Nitrogen Removal Skid Dopak Sample Vent (all 14 samples were 0 ppm H2S);
- Deethanizer Vent Gas Dopak Sample Station (all 14 samples were 0 ppm H2S);
- Benzene Feed Dopak Sample Station (average of 14 samples was 0.37 ppm H2S);
- V-23 Reactor Inlet Dopak Sample (average of 7 samples was 0.44 ppm H2S); and
- DIPB Reflux Dopak Sample (average of 7 samples was 0.62).

All of the sampling performed on this part of the unit indicated not only less than 20 ppm H2S, but all values fell below 1 ppm. In addition, all but three connections to the 1732 CU-V18 Flare Header to UV-1010 are either car-sealed closed, are pressure relief valves, have been taken OOS and capped/blinded or is a seal pot. Accordingly, no further sampling activities are proposed for these connections.

The remaining 3 connections are all pressure control valves (#'s 36, 85 and 86 on the attached spreadsheet) which continuously vent to the flare. Based upon engineering knowledge, the vented gaseous material would not contain H2S. Accordingly, all three connections meet the <20 ppm H2S exemption and no further sampling activities are proposed.

Unit 1733 Steamdown Flare Header to UV-698

Supporting test results are included for the following:

- CU-514 Degassing Drum (all 14 samples were 0 ppm H2S); and
- CU-V312 Cumene Column "C" Vent (all 14 samples were 0 ppm H2S).

All of the sampling performed on this part of the unit indicated not only less than 20 ppm H2S, but all values fell below 1 ppm. In addition, all other connections to the 1733 Steamdown Flare Header to UV-698 are either car-sealed closed or have been taken OOS and capped/blinded. Accordingly, no further sampling activities are proposed for these connections.

Unit 1733 Seal Pot Vents

Supporting test results are included for the following:

- DIPB Bottoms Dopak Sample (average of 7 samples was 4.59 ppm H2S);
- Cumene Bottoms Dopak Sample (average of 7 samples was 0.52 ppm H2S); and
- DIPB Recycle Dopak Sample (average of 6 samples was 0.41 ppm H2S).

All of the sampling performed on this part of the unit indicated not only less than 20 ppm H2S, but all values fell below 5 ppm. In addition, all other connections to the 1733 Seal Pot Vents part of the unit are seal pots. Accordingly, no further sampling activities are proposed for these connections.

Unit 1733 PP Bullets Flare Header

Supporting test results are included for the Truck Unloading Station Vent in which an average of 14 samples revealed < 1 ppm H2S. All other connections to the Unit 1733 PP Bullets Flare Header portion of this unit are either car-sealed closed or are pressure relief valves. Accordingly, no further sampling activities are proposed for these connections

Unit 1733 CU-V8 Flare Header

Supporting test results are included for the HV-008 Pressure Control Valve for the CU-V8 Depropanizer Overhead receiver, in which all 7 samples were 0 ppm H2S. Accordingly, as this connection meets the <20 ppm H2S exemption, no further sampling activities are proposed. There are no other connections associated with this spreadsheet.

Unit 1332 Blowdown Header to UV-1010

No supporting test results are required for the Unit 1332 Blowdown Header to UV-1010 connections as there are no streams that will use the one time sampling provisions under Appendix H. All but one of the connections from this area of the 1332 unit are either car-sealed closed, have been taken OOS and are either blinded / capped, or are pressure relief valves. Accordingly, no further sampling activities are proposed for these connections

There is one connection (# 62 on the attached spreadsheet) that is a fuel gas connection with an AMS certified CEMS that monitors H2S. This connection is listed in Table II of Section 6/7 as Item # 7.

Unit 1332 Flare Header HP-27-G

All but 10 of the connections from this area of the 1332 unit are either car-sealed closed, have been taken OOS and blinded/capped, are pressure relief valves, contain exempt streams or are seal pots. There are also 12 connections for this area, as described in Section 3, that are associated with no/negligible H2S levels. In some cases engineering judgment was used and previously collected samples were used for others. Accordingly, regarding all of the above connections, no further sampling activities are proposed.

The 10 other connections include two (#'s 52 and 53 on the attached spreadsheet) that are fuel gas connections with an AMS certified CEM that monitors H2S. These connections

are listed in Table II of Section 6/7 as Item #'s 8 and 9. The remaining 8 connections (#'s 15-22 on the attached spreadsheet) are associated with unit compressor vent valves (38C-703). The stream through all 8 connections would typically exceed 162 ppm H2S only in the event of a seal leak. These 8 connections are listed in Table II of Section 6/7 as Item #'s 10-17 and a description of their specific monitoring plan is detailed in the following paragraph.

For the eight 38C-703 Compressor seal vent connections, which are all crank or packing vents under a nitrogen purge on the flare header side of the packing. During normal operation, tight seals prevent process gas leaks through these connections to the 1231/1232 flare system. Engineering calculations revealed that the contribution of SO2 from these sources at the common, downstream sampling point during normal operation is minimal. However, in order to model worst case conditions, Sunoco assumed a total packing failure of the connection with the highest H2S concentration at the maximum flow rate. Assuming these worst case conditions, the total contribution of SO2 would never exceed 20.26 lbs/day. Accordingly, these connections were placed onto the *de minimus* source list (spreadsheet of all sources attached) and the total of all *de minimus* sources is well below the 100 lbs/day allowed under Appendix H of the Consent Decree.

Unit 1332 Steamdown Header to UV-698

All but 2 of the connections from this area of the 1332 unit are either car-sealed closed, have been taken OOS and blinded/capped, or are associated with lines that are no longer connected. There is also 1 connection (# 28 on the attached spreadsheet) that is a specific gravity analyzer. Using engineering judgment, H2S levels associated with this stream would not exceed 2 ppm.

The other connection (# 8 on the attached spreadsheet) is associated with the V-601 depropanizer overhead sampling station. According to engineering judgment, typical stream concentrations would not exceed 2 ppm. Accordingly, regarding all of the above connections, no further sampling activities are proposed.

Unit 433 North Butane Field Flare Header

Supporting test results are included for the following:

- 1069 Sphere at the 433 North Butane Tank Field (average of 7 samples was 4.0 ppm H2S)
- 1067 Sphere at the 433 North Butane Tank Field (average of 7 samples was 8.57 ppm H2S);
- 1068 Sphere at the 433 North Butane Tank Field (all 7 samples were 0 ppm H2S);
- 1066 Sphere at the 433 North Butane Tank Field (all 7 samples were 0 ppm H2S);
- 1065 Sphere at the 433 North Butane Tank Field (all 7 samples were 0 ppm H2S); and
- 1064 Sphere at the 433 North Butane Tank Field (all 7 samples were 0 ppm H2S).

All of the sampling performed on this part of the unit were less than 20 ppm H2S. In addition, all but one connection to the 433 North Butane Field Flare Header are either car-sealed closed, have been taken OOS and capped/blinded, are pressure relief valves, or are seal pots. Accordingly, no further sampling activities are proposed for these connections

The one connection (# 40 on the attached spreadsheet) is a pressure control valve associated with the V-53 Fresh Additive Drum and, based upon engineering judgment, would not contain any H2S in the stream. Accordingly, no further sampling activities are proposed for this connection.

Unit 137 Flare Header

No supporting test results are required for the Unit 137 Flare Header connections as there are no streams that will use the one time sampling provisions under Appendix H. Other than one connection, all other connections from this unit are either car-sealed closed, taken OOS and capped/blinded, are pressure relief valves, is a seal pot, or is associated with an exempt stream (steam). Accordingly, no further sampling activities are proposed for these connections

The one connection (# 22 on the attached spreadsheet) is a pressure control valve that is associated with a sour gas stream. This valve would only open in the event of a unit malfunction and is included in Table I of Section 6/7 as Item #9.

Unit 231 Flare Header

Supporting test results are included for the following:

- F-501 Fuel Gas Knockout Drum (average of 14 samples was 8.79 ppm H2S); and
- J-102 Compressor Oil Trap Sweep (all 14 samples were 0 ppm H2S).

All of the sampling performed on this part of the unit were less than 20 ppm H2S. Other than one connection, all other connections to the Unit 231 Flare Header portion of this unit are either car-sealed closed, have been taken OOS and capped/blinded, are pressure relief valves, or is associated with an exempt source (steam). Accordingly, no further sampling activities are proposed for these connections

The one other connection (#8 on the attached spreadsheet) is a pressure control valve with an estimated concentration of 20-100 ppm H2S in the stream. This valve would only open in the event of a unit malfunction and is included in Table I of Section 6/7 as Item #10.

Unit 231 Blowdown and Pumpout Systems

No supporting test results are required for the Unit 231 Blowdown and Pumpout Systems connections as there are no streams that will use the one time sampling provisions under Appendix H. The connections from these miscellaneous areas of Unit 231 are either car-sealed closed or have been taken OOS and capped/blinded. Accordingly, no further sampling activities are proposed for these connections.

Unit 331 ISOM Flare Header

Supporting test results are included for the following:

- ISOM V-12 Knockout Drum (all 14 samples were 0 ppm H2S);
- Stabilizer Bottoms Dopak Sample (all 7 samples were 0 ppm H2S); and
- C-4 Drier Effluent Dopak Sample (all 14 samples were 0 ppm H2S).

All of the sampling performed on this part of the unit were less than 20 ppm H2S. All other connections to the Unit 331 ISOM Flare Header are either car-sealed closed, have been taken OOS and capped/blinded, are pressure relief valves or are seal pots. Accordingly, no further sampling activities are proposed for these connections.

Unit 431 Flare Header

Supporting test results are included for the following:

- DIB Bottoms Dopak Sample (all 14 samples were 0 ppm H2S); and
- Mixed Butane Feed Dopak Sample (all 14 samples, except one which was 1 ppm, were 0 ppm H2S).

All of the sampling performed on this part of the unit were less than 20 ppm H2S. All other connections to the Unit 431 Flare Header portion of this unit are either car-sealed closed or have been taken OOS and capped/blinded. Accordingly, no further sampling activities are proposed for these connections.

#3 Boiler House Blowdown Flare header

No supporting test results are required for the #3 Boiler House Blowdown Flare Header connections as there are no streams that will use the one time sampling provisions under Appendix H. Other than one connection, all other connections from this area are either car-sealed closed or have been taken OOS and blinded / capped. Accordingly, no further sampling activities are proposed for these connections.

The one other connection (#1 on the attached spreadsheet) is a fuel gas connection with an AMS certified CEM that monitors H2S. This connection is included in Table II of Section 6/7 as Item # 18.

Section 5. - A description of how the sampling is representative of normal operation

One time sampling was performed, per Appendix H, for 89 connections. Each of these sampling events has been previously described in Sections 3 and 4. A grouped summary for all 89 connections follow:

- 38 analyzer vent and sample station connection sampling was conducted in which all values fell below 20 ppm H2S. Further, all of these connections were < 5 ppm H2S.
- 26 valves associated with miscellaneous process equipment and vent sampling was conducted in which all values fell below 20 ppm H2S. Further, all of these connections were < 5 ppm H2S.
- 16 valves/bypass sampling was performed on the butane sphere system in which all samples were less than 20 ppm H2S. In all but one case, all values were 0 ppm H2S.
- 5 pressure control valves were sampled which either continuously or intermittently open, in which all samples were less than 20 ppm H2S.
- 2 analyzer vents were sampled in which the H2S concentrations were greater than 20 ppm. In one of those vents, the H2S value fell within the 20-100 ppm range. For the other vent, the H2S value was greater than 162 ppm.
- 1 fuel gas knockout drum vent was sampled in which the average of those samples were 9 ppm H2S.
- 1 sample was collected covering eight 38C-703 Compressor seal vent connections.

Prior to any and all of the above sampling efforts, an analysis of unit operational conditions was assessed to determine if the sample to be collected would be representative of normal operation. In all cases, it was determined that all samples collected were representative of normal operation.

Section 6 and 7 - Identification of a representative process parameter to be monitored as an indicator of stream sulfur and A suggested parameter limit for each gas stream and a review schedule

In summary, a total of 930 connections were evaluated which are contained within 28 segregated spreadsheets. Of the 930 components there are 902, as grouped below, in which no further sampling activities are proposed.

- 455 connections were determined to be car-sealed closed. Car-sealed valves will not be operated during normal operating conditions, and will only be opened under special circumstances such as maintenance activities during a shutdown. These car-sealed valves will be monitored monthly to verify that the valves have not been opened and that the seals are still in tact. Valves that are found to have broken seals will be reported in our semiannual flare report

required by the Consent Decree. Valves that have car seals broken to support maintenance activities (such as preparing an exchanger for maintenance) will not be reported in the semiannual report. Those car seals will be replaced when the maintenance activity is completed. Accordingly, there are no further sampling activities proposed for these 455 connections.

- 156 connections were determined to be out-of-service and capped/blinded or were discovered to be not connected during field investigatory activities. Accordingly, there is no further sampling activities proposed for these 156 connections.
- 122 connections were identified as pressure relief valves. According to paragraph 50.b. of the Consent Decree, the combustion of gases generated as a result of relief valve leakage or other emergency malfunction are exempt from the requirements of 40 CFR 60.104(a)(1). There is no further sampling activities proposed for these connections.
- 57 connections were seal pots which are safety systems with instruments that sense barrier fluid pressure. These vents are designed for no flow and are treated like relief valves. Accordingly, no further sampling activities are proposed for these connections.
- 12 connections were associated with exempt streams (e.g. steam, nitrogen, liquids, etc.) and no further sampling activities are proposed for these connections. .
- 100 connections were connections (valves, vents, etc.) associated with H2S streams less than 20 ppm. In most cases, sample results were less than 5 ppm H2S. In a few isolated instances, as described in Section 4, engineering judgment was used to determine H2S levels.

That leaves 28 components that warrant further discussion and/or evaluation. Included below are two tables in which each of these 28 components are individually listed. Table I includes the pressure control valves and Table II lists all other components.

Table I – Pressure Control Valve Monitoring Plan

Item #	Spreadsheet Name	ID#	Equip #/ Location	Routing Method	Freq	H2S Conc	Monitoring Parameter
1	FCCU Cat Recovery	1	F-103 PCV	Control Valve	Malf only	> 162	Note #1
2	FCCU Cat Recovery	58	E-201 PV-201B	Control Valve	Malf only	> 162	Note #1
3	FCCU CO Boiler	3	HV-347 Latch Valve	Control Valve	Malf only	20 - 100	Note #1
4	FCCU CO Boiler	4	HV-350 Latch Valve	Control Valve	Malf only	20 - 100	Note #1
5	FCCU CO Boiler	5	HV-362 Latch Valve	Control Valve	Malf only	> 162	Note #1

6	FCCU CO Boiler	6	HV-374 Latch Valve	Control Valve	Malf only	20 - 100	Note #1
7	FCCU CO Boiler	7	HV-377 Latch Valve	Control Valve	Malf only	20 - 100	Note #1
8	8733 Flare Header	1	D-201B PV-200B	Control Valve	Malf only	> 162	Note # 1
9	Unit 137 Flare	22	25D-12 PRC580	Control Valve	Malf only	> 162	Note #1
10	Unit 231 Flare header	8	F-401 HVC-533B	Control Valve	Malf only	20 - 100	Note #1

Table 1 Notes:

Note #1 – These are PCV's that only relieve to the flare in the event of a malfunction and are basically used in the same fashion as emergency relief valves. These PCV's are fully instrumented and the refinery data collection system will flag when a malfunction causes these valves to open to the flare. If this occurs, Sunoco will make a determination using material balances and engineering knowledge to determine whether a hydrocarbon flaring incident has occurred within the meaning of the Consent Decree (i.e. 500 lbs or more SO2 in a 24-hour period). In the event that standard is exceeded, all required reports will be submitted, and the event will be treated as a hydrocarbon flaring incident that requires a root cause analysis under the Consent Decree.

Table II – Other Connection Monitoring Plan

Item #	Spreadsheet Name	ID#	Equip #/ Location	Routing Method	Freq	H2S Conc	Monitoring Parameter	Monitoring Limit
1	FCCU Steamdown	1	V-10001 HVC-761	Control Valve	Intermittent	< 20	Note #1	162 ppm
2	FCCU Steamdown	107	749 FG KO Drum Vent	Manual Valve	Intermittent	< 20	Note #1	162 ppm
3	FCCU Cat Recovery	49	T-9 Bottoms Analyzer Vent	-	Continuous	20 - 100	< 100 lbs SO2/ Day calculation	Not Applicable
4	FCCU Cat Recovery	46	E-201 Analyzer Vent	-	Continuous	> 162	< 100 lbs SO2/ Day calculation	Not Applicable
5	FCCU Cat Recovery	47	E-204 Analyzer Vent	-	Continuous	> 162	< 100 lbs SO2/ Day calculation	Not Applicable
6	Unit 531 V-10001 Mix Drum	10	V-10001 PV-796	Control Valve	Intermittent	< 20	Note #1	162 ppm
7	Unit 1332 Blowdown Header	62	V-606 Manual Valve	Manual Valve	Intermittent	< 20	Note #1	162 ppm
8	Unit 1332 at HP-27-G	52	H-2 AE-001	Manual Valve	Continuous	20 - 100	Note #1	162 ppm
9	Unit 1332 at HP	53	H-2 AE-002	Manual Valve	Continuous	20 - 100	Note #1	162 ppm

10	Unit 1332 at HP	15	38C-703 Crank Vent	Manual Valve	Continuous	> 162	< 100 lbs SO2/ Day calculation	Not Applicable
11	Unit 1332 at HP	16	38C-703 Crank Vent	Manual Valve	Continuous	> 162	< 100 lbs SO2/ Day calculation	Not Applicable
12	Unit 1332 at HP	17	38C-703 Packing Vent	Manual Valve	Continuous	> 162	< 100 lbs SO2/ Day calculation	Not Applicable
13	Unit 1332 at HP	18	38C-703 Crank Vent	Manual Valve	Continuous	> 162	< 100 lbs SO2/ Day calculation	Not Applicable
14	Unit 1332 at HP	19	38C-703 Packing Vent	Manual Valve	Continuous	> 162	< 100 lbs SO2/ Day calculation	Not Applicable
15	Unit 1332 at HP	20	38C-703 Crank Vent	Manual Valve	Continuous	> 162	< 100 lbs SO2/ Day calculation	Not Applicable
16	Unit 1332 at HP	21	38C-703 Packing Vent	Manual Valve	Continuous	> 162	< 100 lbs SO2/ Day calculation	Not Applicable
17	Unit 1332 at HP	22	38C-703 Packing Vent	Manual Valve	Continuous	> 162	< 100 lbs SO2/ Day calculation	Not Applicable
18	#3 Boiler House	2	LCV-1001	Control Valve	Intermittent	< 20	Note #1	162 ppm

Table II Notes:

Note #1 - These are fuel gas connections with an Air Management Services CEM that monitors H2S. Continuous monitoring with this certified CEM will be the compliance monitoring method. No further sampling actions are warranted.

Sunoco will implement a specific procedure written to ensure that Sunoco will adhere to all of the provisions contained within this monitoring plan. The procedure addresses the specific process from the discovery of a potential regulatory condition (i.e. car seal valve broken and valve discovered open, PCV opened, etc.) to what internal actions must occur, to ultimate reporting (if necessary).

Submittal Date: July 5, 2010
Due Date: December 31, 2010
Plan Implementation Date: December 31, 2010

Summary

Under a global settlement document entered by Sunoco in USA v. Sunoco, Inc., Civil Action No. 05-02266 (W.D. Pa) (the "Consent Decree"), the 433 Unit Plant Flare in Philadelphia must be compliant with NSPS Subparts A and J by December 31, 2010. This Document is the Alternative Monitoring Protocol (AMP) submittal required as an option under Appendix H of that Settlement. This document demonstrates the method that Sunoco will use to continuously demonstrate compliance of the 433 Unit Plant Flare with the requirements of 40 C.F.R. Part 60, Subparts A and J.

This document identifies all continuous and intermittent streams into the flare system, and for each continuous and intermittent stream, provides the following:

1) A description of the stream and piping diagram
2) A statement confirming no crossover or sour gas entry points
3) An explanation of conditions that ensure low emission rates
4) Supporting test results using H2S monitoring
5) A description of how the sampling is representative of normal operation
6) Identification of a representative process parameter to be monitored as an indicator of stream sulfur
7) A suggested parameter limit for each gas stream and a review schedule

Note: Attached to this summary are detailed line by line spread sheets that contain each individual flare connection with identifying information. The P & I D drawings, that locate these connections, are referenced on the spread sheets. These drawings are currently being updated and will be maintained by Sunoco. Due to the sheer volume of information required to support this AMP, this summary sheet's purpose is to provide an overview of the AMP and the methodology that Sunoco used in its creation. The 433 Unit Plant Flare system may undergo minor, insignificant changes during the life of this AMP. These changes will not significantly alter the Alternate Monitoring Protocol. Examples of these changes are: the addition of a new sample point that vents to the flare, the addition of a new relief valve, and/or the addition of a new seal pot. If any changes to the flare trigger additional requirements (such as NSPS Subpart Ja), then those requirements will be incorporated into the AMP as appropriate. If additional monitoring requirements are triggered due to flare modification, Sunoco will comply with those monitoring requirements as appropriate (which may include submission of a revised AMP approval request in accordance with NSPS requirements). Sunoco's Management-Of-Change system will capture any such changes as they occur and the AMP will be updated on an annual basis, if necessary.

A Brief description of the 433 Unit Plant Flare System

The 433 Unit Plant Flare system services the Hydrofluoric Acid Alkylation Unit (Girard Point "Alky" Unit, also called 433 Unit). The flare is steam assisted and is 250 feet above grade with a 36" diameter flare header. The flare headers maintain pressure with refinery fuel gas. The flare is monitored via a TV camera with monitors located in both the Central Control Room and the 433 Unit blockhouse. The flame is also monitored with an infrared flame monitor that has an output to the refinery PKS data acquisition system.

There are two flare headers servicing the 433 unit, the Acid Flare Header and Non-Acid Flare Header. Discharges to the Acid Flare Header include the Reactor/Settler, Rerun Tower and all associated equipment. These systems discharge to the T-3 Acid Relief Neutralizer (ARN) prior to discharge to the V-23 Flare Knockout Drum. Systems discharging to the Non-Acid Flare Header include the Caustic Treater, Deethanizer, Feed Treater and Isobutane systems and associated equipment. These systems bypass the ARN and are discharged downstream of this neutralizer, which then proceeds to the V-23 Flare Knockout Drum. Accordingly, all discharges to the flare go through Flare Knockout Drum V-23. Liquid from V-23 is pumped to a recovered oil tank.

The 433 Unit Plant Flare system services only the 433 Unit and is isolated from the other flare systems located within the Philadelphia Refinery. There are no interconnections with other refinery process units or processes.

Unit Protected by the 433 Unit Flare

Hydrofluoric Acid Alkylation Unit (433 Unit):

The hydrofluoric acid alkylation process involves a catalytic reaction that combines isobutane with olefins to form alkylate, which is a gasoline boiling range material used as a gasoline blending component. The olefins are propylene, butylene and amylenes (pentenes) with hydrofluoric acid acting as the catalyst. Philadelphia Refinery catalytic cracking units provide most of the feed material (olefins) which is first pretreated to remove impurities. The treated feed is injected into the reactor risers where the feed contacts recirculating HF acid, resulting in an alkylation reaction. Downstream fractionation and product treating refine the reacted products. Acid regeneration is necessary because the process lowers the acid concentration, thereby affecting reaction yields. The circulating HF acid is regenerated in the T-11 rerun column to remove impurities. Fresh acid must be added to the system, as needed, from the acid storage drum (V-19).

1. A description of the stream and piping diagrams (actual flare connections are attached).

Below is a description of the scope in identifying flare connections.

Flare headers were walked down in the field and matched up with the Process and Instrument Diagrams (P& ID). All connections to the flare headers were analyzed and logged into spread sheets for that flare. Connections that were found and deemed unnecessary were either physically divorced from the flare by a blind, or the valve at the flare header was closed and a car seal was placed on that valve. The AMP for the 433 Unit Plant Flare system includes approximately 100 valves with car seals. In general, car-sealed valves will only be opened for special maintenance activities such as a shutdown. These car-sealed valves will be monitored monthly to verify that the valves have not been opened and that the seals are still intact. Valves that are found to have broken seals will be reported in our semiannual flare report required by the Consent Decree. Valves that have car seals broken to support maintenance activities (such as preparing an exchanger for maintenance) will not be reported in the semiannual report. Those car seals will be replaced when the maintenance activity is completed.

The spreadsheets attached have a line by line analysis of the flare connection on the 433 Unit Flare header. There are two separate spreadsheets associated with this monitoring plan which include:

- Non-Acid Flare Header to the 433 Flare Sources; and
- Acid Flare Header to the 433 Flare Sources.

2. **A statement confirming no crossover or sour gas entry points.**

As noted previously, the 433 Unit Flare is isolated. There are no crossovers or entry points where H2S, other than the fuel gas system, can be introduced into the 433 Unit Plant flare stream.

There are no sample points where H2S is vented back to the flare as part of the sampling process.

3. **An explanation of conditions that ensure low emission rates. On the attached spreadsheets there are line by line listings of the flare connections. A summary of the connections is below.**

Overall, the concentration of H2S in any part of this unit is extremely low (< 5 ppm). Unit feedstock consists of butanes/butylenes (BB) from the catalytic cracking units and occasionally propanes/propylenes (PP) from the 1232 catalytic cracking unit. Based upon laboratory samples collected over the past year, BB H2S content from the catalytic cracking units averaged between 0.5 and 2.5 ppm. PP contributes negligible H2S. These feedstocks enter 433 via V-1 surge drum, and are then passed through two caustic treaters to remove any low levels of H2S and mercaptans with a caustic solution. Next, the feed is sent to the Deethanizer which removes any light-ends including ethane, H2S, water, etc. Samples of the deethanized 433 feed over the past year have consistently shown negligible H2S content.

When the deethanized 433 feed (negligible H2S content) reaches the Acid Reaction section, all remaining sulfur compounds (mostly mercaptans) are reacted to Acid Soluble Oil (ASO). ASO is a non-volatile by-product of alkylation. Beyond the reaction section of the unit, there is no H2S.

Another notable safeguard which reduces the possibility of sending H2S to the flare, via any portion of the unit downstream of the reaction section, is the T-3 Acid Relief Neutralizer (ARN). The T-3 ARN operates to neutralize any streams that may contain acidic compounds prior to being routed to the 433 flare. The tower circulates potassium hydroxide (KOH) solution in order to accomplish this neutralization. Any low levels of H2S would be neutralized upon contact with the circulating KOH solution.

The 433 flare is purged with refinery fuel gas supplied from the Girard Point Main Fuel Gas Drum. This source is monitored by an Air Management Services certified CEM. Fuel gas analysis data for the past year averaged 40 ppm H2S.

Non-Acid Flare Header to the 433 Flare Sources

Refer to the Non-Acid Flare Header to the 433 Sources spread sheet for the line by analysis. For the Unit 433 Non-Acid portion of the 433 Unit Plant Flare, there are 103 connections. Of the 103 connections; 45 are car-sealed closed, 39 are pressure relief valves, 8 have been taken out-of-service and/or capped/blinded and 4 are seal pots. Of the remaining 7 connections: 4 are associated with the hydrogen compressor seal / packing gland nitrogen sweep vent; 2 are fuel gas connections; and 1 connection (valve) is associated with the V-907 caustic flash drum vent.

The item numbers below can be used to locate the item on the spread sheet.

- Item #'s 2, 4, 6, 9, 12, 14, 16, 18, 21, 23, 25, 27, 28, 29, 31, 34, 36, 38, 40, 44, 45, 47, 48, 50, 51, 53, 55, 56, 59, 62, 64, 69, 74, 76, 77, 80, 81, 82, 86, 88, 90, 92, 94, 97 and 103 are car-sealed closed. These items are chiefly PSV bypasses.

- Item #'s 1, 3, 5, 8, 10, 11, 13, 15, 17, 19, 20, 22, 24, 26, 30, 33, 35, 37, 39, 43, 49, 57, 58, 60, 61, 63, 65, 66, 67, 68, 70, 73, 79, 85, 89, 93, 96, 98 and 102 are pressure relief valves. According to paragraph 50.b. of the Consent Decree, the combustion of gases generated as a result of relief valve leakage or other emergency malfunction are exempt from the requirements of 40 CFR 60.104(a)(1).

- Item #'s 41, 42, 46, 87, 91 and 95 have been taken out-of-service and/or blinded / capped. Item #'s 71 and 72 were removed.

- Item #'s 52, 54, 100 and 101 are seal pots which are not designed to leak and operate under pressure between the barrier fluids. A failure of the seal pot would be similar to a relief valve failure.

- Item #'s 75, 78, 83 and 84 are associated with the hydrogen compressor seal / packing gland nitrogen sweep vent. All 14 sample results (attached) showed 0 ppm H2S.

- Item #'s 7 and 32 are fuel gas connections that originate from a common mix drum with an Air Management Services certified CEM that monitors H2S. Continuous monitoring with this certified CEM will be the compliance monitoring method.

- Item # 99 is associated with the caustic flash drum vent. All 14 sample results (attached) showed 0 ppm H2S.

Acid Flare Header to the 433 Flare Sources

Refer to the Acid Flare Header to the 433 Flare Sources spread sheet for the line by analysis. For the Unit 433 Acid Relief Flare Header portion of the 433 Unit Plant Flare, there are 110 connections. Of the 110 connections; 61 are either car-sealed closed or have been taken out-of-service, 21 are pressure relief valves, and 11 are seal pots. Of the

remaining 17 connections; 8 are pressure control valves, 4 relate to samplers / analyzers, 3 are fuel gas connections; 1 is a manual valve associated with the loading of fresh acid and 1 connection is associated with an exempt stream (nitrogen).

The 433 Acid Relief Neutralizer (ARN) within this section of the unit operates to neutralize acid containing hydrocarbon streams being vented to the flare by countercurrently contacting the stream with a solution of KOH. Prior to being vented to the flare, via the ARN, all of the acid-containing streams have negligible (< 1 ppm) levels of H2S due to the consumption of the sulfur species in the reaction section of the unit. Any trace H2S would be neutralized in the caustic environment of the ARN.

The item numbers below can be used to locate the flare connection and stream information on the spread sheet.

- Item #s 5, 7, 9, 21-27, 32, 34-41, 43, 46-48, 50, 52, 54, 56, 58-62, 68, 70, 76, 78, 79, 80, 83, 85, 86, 88, 89, 92, 93, 94, 97, 99, 100, 101, 103, 104, 106, 107 and 109 are car-sealed closed. These items are chiefly PSV bypasses. Item #'s 33, 44, and 74 have been taken out-of-service and/or blinded / capped. Item #'s 10, 11, and 57 were removed.

- Item #'s 2, 3, 12, 15, 16, 17, 64, 66, 67, 69, 71, 72, 75, 81, 84, 87, 90, 96, 98, 102 and 105 are pressure relief valves. According to paragraph 50.b. of the Consent Decree, the combustion of gases generated as a result of relief valve leakage or other emergency malfunction are exempt from the requirements of 40 CFR 60.104(a)(1).

- Item #'s 6, 8, 31, 42, 45, 49, 51, 53, 55, 77 and 95 are seal pots which are not designed to leak and operate under pressure between the barrier fluids. A failure of the seal pot would be similar to a relief valve failure.

- Item #'s 4, 13, 18, 73, and 108 represent pressure control emergency block valves that would only be used during operational malfunctions / shutdowns or are associated with the fresh acid part of the unit. Operators in the control room would be notified, via alarm, if any of these events occur. All streams associated with these connections are either post-reaction or fresh acid streams which would contain negligible (< 1 ppm) amounts of H2S. Further, each stream would relieve to the ARN, prior to the flare, which would effectively neutralize any *de minimus* levels of H2S in the stream. Item #'s 65, 82 and 91 are pressure control valves each emitting a continuous stream to the flare. In each case, the stream consists of no H2S and is under a nitrogen blanket.

- Item #'s 28, 29, 30, and 63 are samplers / analyzers within the unit. Item #28 pulls a circulating acid sample which would contain 0 ppm H2S. Item #29 samples recycle isobutene and olefin feed. The recycled isobutene is a post-reaction (0 ppm H2S) product and olefin feed samples have consistently shown 0 ppm hydrogen sulfide levels in this stream. Item #63 samples another post-reactant product (isostripper side

draw) which would also contain 0 ppm H2S. Further, all of these sample connections relieve to the ARN prior to discharge to the flare.

- Item #'s 1, 19 and 110. These items are fuel gas connections that originate from a common mix drum with an Air Management Services certified CEM that monitors H2S. Continuous monitoring with this certified CEM will be the compliance monitoring method.

- Item #14 is a manual valve opened only when fresh acid is loaded. As previously mentioned, there is no (0 ppm) H2S in fresh HF acid.

- Item #20 would only involve a nitrogen purge to the flare and accordingly would be exempt from monitoring.

4. Supporting test results using H_2S monitoring

Non-Acid Flare Header to the 433 Flare Sources – Supporting test results are included for the hydrogen compressor seal / packing gland nitrogen sweep vent (all 14 samples were not detected for H2S) and the caustic flash drum vent (all 14 samples were not detected for H2S). All other connections to the Non-Acid portion of this unit are either: car-sealed closed, pressure relief valves, out-of-service / removed, seal pots or are associated with the fuel gas system, which is being monitored by a CEMs certified in accordance with Philadelphia Air Management Services ("AMS") requirements.

Acid Flare Header to the 433 Flare Sources – No sampling was performed for the Acid Flare Header portion of the unit due to, as previously described, no H2S sources or contributions to the flare system. Most connections in this part of the unit are designed to relieve only during operational malfunctions or shutdowns. When inadvertently relieved, as described above, these connections involve the post-reaction side of the process which consumes sulfur in the reactor or involve fresh acid. Further, residual and low levels of H2S would be neutralized by the ARN prior to discharge to the flare. All connections to the Acid portion of this unit are either: car-sealed closed, out-of-service / removed, pressure relief valves, seal pots, exempt (<20 ppm H2S) or are associated with the fuel gas system, which is being monitored by a CEMs that has been certified in accordance with AMS requirements.

5. A description of how the sampling is representative of normal operation

Non-Acid Flare Header to the 433 Flare Sources – Sampling was conducted for both the hydrogen compressor and the caustic flash drum between 6/11/2007 and 6/25/2007. Operational conditions during this period were evaluated and determined to be representative of normal operation.

Acid Flare Header to the 433 Flare Sources – As described in Section 4, sampling was not conducted in this portion of the unit as there is no H2S.

6. Identification of a representative process parameter to be monitored as an indicator of stream sulfur

Other than one-time sampling performed for the two flare header sources, the 433 Unit Flare connections are either:

- Fuel gas connection monitored with an AMS-certified CEM;
- Exempt pressure relief valves;
- Seal pots which operate like relief valves;
- Associated with nitrogen purging (exempt);
- Connections in which the H2S concentration is < 20 ppm (exempt);
- Car-sealed closed (verified on a monthly basis); or
- Connections taken OOS and blinded/capped.

Accordingly, there are no further sampling activities proposed for any of the connections associated with this monitoring plan. Car-seals and seal pots are regularly checked and the fuel gas CEMs will continuously monitor H2S for those associated connections.

Sunoco will implement a specific procedure written to ensure that Sunoco will adhere to all of the provisions contained within this monitoring plan. The procedure addresses the specific process from the discovery of a potential regulatory condition (i.e. car seal valve broken and valve discovered open, etc.), to what internal actions must occur, to ultimate reporting (if necessary).

7. A suggested parameter limit for each gas stream and a review schedule

Other than one-time sampling performed for the two Non-Acid flare header sources, the 433 Unit Flare connections were either:

- Fuel gas connection monitored with an AMS-certified CEM;
- Exempt pressure relief valves;
- Seal pots which operate like relief valves;
- Associated with nitrogen purging (exempt);
- Connections in which the H2S concentration is < 20 ppm (exempt);
- Car-sealed closed (verified on a monthly basis); or
- Connections taken OOS and blinded/capped.

Accordingly, there are no further sampling activities proposed for any of the connections associated with this monitoring plan. Car seals and seal pots are regularly checked and the fuel gas CEMs will continuously monitor H2S for those associated connections.

Sunoco will implement a specific procedure written to ensure that Sunoco will adhere to all of the provisions contained within this monitoring plan. The procedure addresses the specific process from the discovery of a potential regulatory condition (i.e. car seal valve broken and valve discovered open, etc.), to what internal actions must occur, to ultimate reporting (if necessary).

SECTION H. SUNOCO MARCUS HOOK REFINERY

In August 2012, certain air contaminant sources related to petroleum refining and located in Sunoco Inc.'s Marcus Hook refinery which were permitted under Title V operating permit No. 23-00001 (originally issued on November 18, 2008) and the air contaminant sources located in Sunoco's Philadelphia refinery which are permitted under Title V operating Permit No. V95-038 were determined to be a single facility for New Source Review (NSR), Prevention of Significant Deterioration (PSD) and Title V applicability purposes in accordance with a determination that the facilities were one source. As of July 6, 2013, after the change in ownership of both Marcus Hook and Philadelphia refinery air contaminant sources as well as permanent surrender of crude refining capabilities at Marcus Hook, the two facilities are no longer considered a single facility. However, PES continues to include emissions changes to air contaminant sources at the Marcus Hook refinery that occurred prior to July 6, 2013 for NSR, PSD, and Title V applicability purposes.

* This is a State requirement and is not Federally enforceable.

** This is a Local requirement and is not Federally enforceable.