AS-BUILT INFORMATION HAS BEEN PROVIDED BY OTHERS. REZEK, HENRY, MEISENHEIMER, AND GENDE, INC. ASSUMES NO LIABILITY FOR THE ACCURACY OF THE AS-BUILT INFORMATION SHOWN.

DRAWINGS FOR
SOUTHWEST WASTEWATER PUMP STATION
FOR THE
CITY OF NAPERVILLE, ILLINOIS

PREPARED BY

REZEK, HENRY, MEISENHEIMER AND GENDE, INC.

LIBERTYVILLE, ILLINOIS

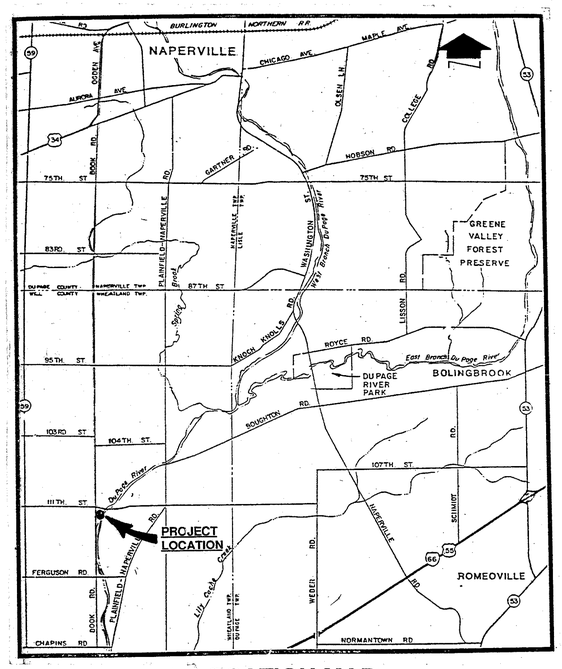

LOCATION MAP

INDEX OF DRAWINGS

GENERAL
G1 COVER SHEET AND INDEX
G2 SITE PLAN
G3 MISCELLANEOUS DETAILS
G4 EROSION CONTROL PLAN
G5 LANDSCAPING PLAN
G6 111TH STREET CROSSING PROFILE

MECHANICAL
M1 PUMP STATION PLAN AND SECTION
M2 PUMP STATION UPPER PLAN AND CONTROL BUILDING

STRUCTURAL
S1 PLANS AND SECTIONS
S2 STRUCTURAL ELEVATIONS
S3 STRUCTURAL SECTIONS

ARCHITECTURAL
A1 PLANS AND ELEVATIONS
A2 MISCELLANEOUS DETAILS

ELECTRICAL
E1 ELECTRICAL PLANS
E2 ONE LINE DIAGRAMS, MOTOR CONTROL CENTER, CONTROL DIAGRAMS
E3 CONTROL, INSTRUMENTATION AND TELEMETRY DIAGRAMS
E4 ELECTRICAL DETAILS AND SCHEDULES

LEGEND

(AB) = AS-BUILT

NOTE

AS-BUILT INFORMATION PROVIDED BY THE CITY OF NAPERVILLE 1/4/95

WILLIAM R. HICKEY 62-37706 REGISTERED PROFESSIONAL ENGINEER OF ILLINOIS

Registration Expires 11/30/95

AS-BUILT

JANUARY, 1993

REV. FEBRUARY, 1993

AS-BUILT INFORMATION HAS BEEN PROVIDED BY OTHERS. REZEK, HENRY, MEISENHEIMER, AND GENDE, INC. ASSUMES NO LIABILITY FOR THE ACCURACY OF THE AS-BUILT INFORMATION SHOWN.

NOTES:
1. BENCHMARK IRON PIPE CENTERLINE BOOK ROAD AND 111th STREET ELEVATION 643.20.

2. CONSTRUCTION TRAFFIC IS TO MAKE RIGHT TURN ONLY INTO AND OUT OF SITE

3. EXCAVATED MATERIALS MAY BE TEMPORARILY STOCKPILED IN THE CONSTRUCTION EASEMENT INDICATED. THE CONTRACTOR IS RESPONSIBLE FOR PROVIDING ADDITIONAL FILL OR DISPOSING OF SURPLUS EXCAVATED MATERIALS AT ITS OWN EXPENSE AS REQUIRED TO PROVIDE THE NEW CONTOURS INDICATED.

4. AT CONTRACT MATCH LINES EXTENSIONS BY OTHERS ARE PLANNED. IF WORK BY OTHERS IS IN PLACE WHEN CONTRACTOR CONSTRUCTS ITS WORK, CONTRACTOR SHALL REMOVE ANY PLUGS, INSTALL ANY REQUIRED COUPLINGS, AND MAKE ALL NECESSARY ALIGNMENT REVISIONS TO MAKE THESE CONNECTIONS. IF WORK BY OTHERS IS NOT IN PLACE. CONTRACTOR SHALL PROVIDE PLUGS AND THRUST BLOCKS AS REQUIRED TO TEST THE WORK AND PREVENT DIRT AND DEBRIS FROM ENTERING PIPE.

5. NO WORK SHALL BE PERMITTED WITHIN THE TREE PROTECTION ZONES. ANY TREES WITHIN THE TREE PROTECTION ZONE WHICH ARE DAMAGED OR DESTROYED SHALL BE REPLACED.

6. BLASTING OPERATIONS TAKE PLACE AT A QUARRY LOCATED TO THE EAST OF THE PROJECT SITE ALONG THE EAST SIDE OF THE DUPAGE RIVER. CONTRACTOR SHALL TAKE INTO ACCOUNT THE EFFECT OF THE BLASTING OPERATIONS ON THE CONTRACTOR'S WORK AND INCLUDE THE COST FOR SAME IN ITS BID.

7. EDGE OF PITS FOR BORING AND JACKING OPERATIONS SHALL BE MAINTAINED A MINIMUM OF 10' FROM EDGE OF PAVEMENT.

8. GRANULAR FILL (CA-6, GRADE 8 OR 9, COMPACTED TO 95% STANDARD PROCTOR) SHALL BE PROVIDED IN INFLUENCE ZONES BELOW ALL SEWERS, MANHOLES, STRUCTURES AND IN INFLUENCE ZONE OF 111th STREET.

9. SELECT BACKFILL (COMPACTED TO 95% STANDARD PROCTOR) MAY BE PROVIDED, IN LIEU OF GRANULAR FILL UNDER FORCEMAIN. PROVIDE BEDDING AS SHOWN ON DETAIL SHEET.

10. V.I.F.: VERIFY DIMENSIONS/ELEVATIONS IN FIELD.

10. CONTRACTOR SHALL CONTACT JULIE (800) 829-0123 TO LOCATE ALL UTILITIES PRIOR TO ANY CONSTRUCTION.

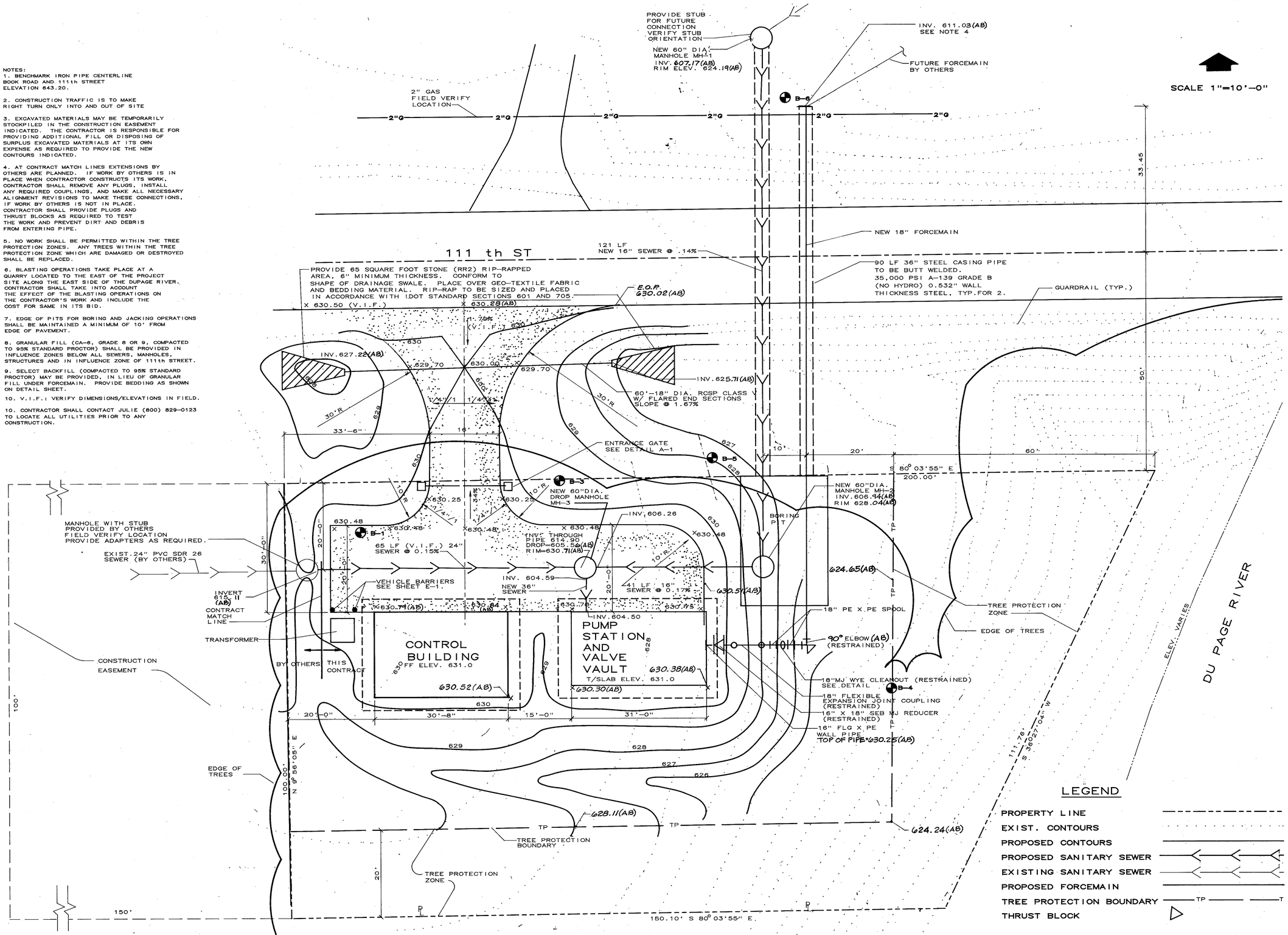

AS-BUILT SITE PLAN

Rezek, Henry, Meisenheimer, and Gende, Inc. — Libertyville, Illinois

SOUTHWEST WASTEWATER PUMP STATION - CITY OF NAPERVILLE, ILLINOIS

Job No. 93080
Date JANUARY, 1993

G-2

AS-BUILT INFORMATION HAS BEEN PROVIDED BY OTHERS. REZEK, HENRY, MEISENHEIMER, AND GENDE, INC. ASSUMES NO LIABILITY FOR THE ACCURACY OF THE AS-BUILT INFORMATION SHOWN.

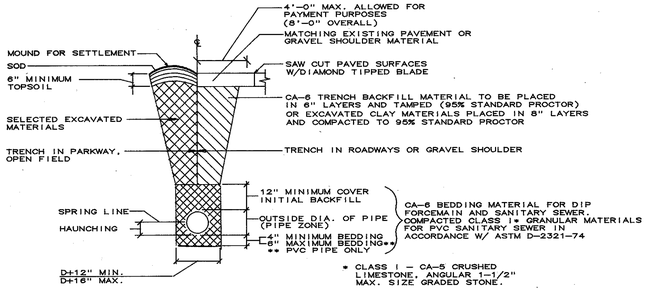

TRENCH DETAIL
N.T.S.

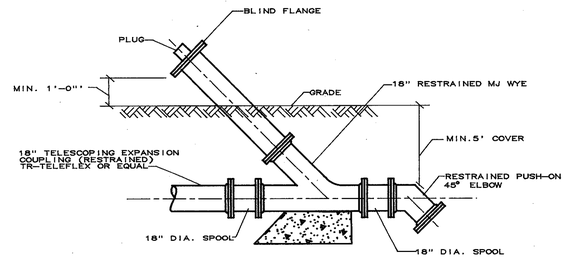

CLEAN-OUT
N.T.S.

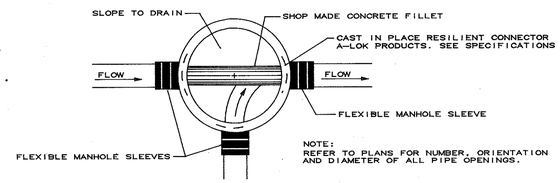

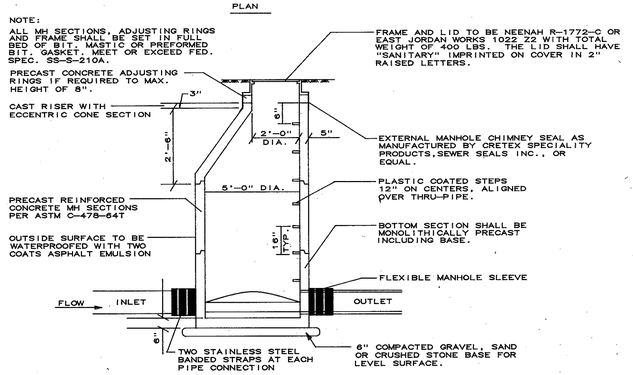

SANITARY MANHOLE
N.T.S.

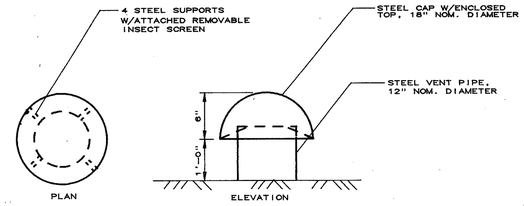

NOTE:
1. VENT PIPE AND CAP SHALL BE CONSTRUCTED TO ALLOW EASY REMOVAL AND REPLACEMENT

VENT PIPE CAP DETAIL
N.T.S.

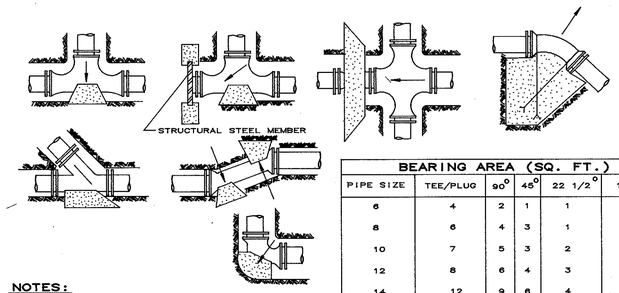

NOTES:

ALL BLOCKING SHALL BE POURED CONCRETE AGAINST UNDISTURBED EARTH.

ALL BENDS OR ELBOWS GREATER THAN 11 1/4° SHALL HAVE THRUST BLOCKING.

BEARING AREA (SQ. FT.)					
PIPE SIZE	TEE/PLUG	90°	45°	22 1/2°	11 1/4°
6	4	2	1	1	1
8	6	4	3	1	1
10	7	5	3	2	1
12	8	6	4	3	2
14	12	9	6	4	3
16	15	12	7	5	3
18	18	15	9	5	4
24	40	30	15	10	5

THRUST BLOCK DETAIL
N. T. S.

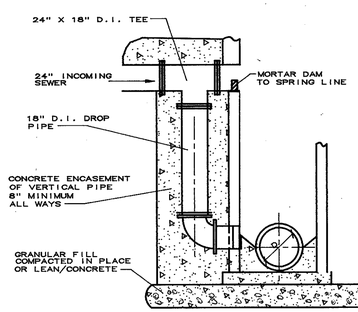

DROP MANHOLE CONNECTION DETAIL
N.T.S.

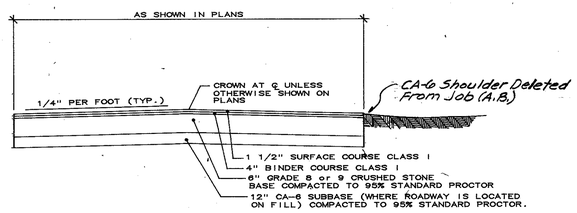

NOTES:

ALL TOPSOIL SHALL BE REMOVED PRIOR TO ROADWAY CONSTRUCTION.

PROOF ROLL AND APPROVAL BY THE ENGINEER WILL BE REQUIRED ON SUBGRADE AND BASE COURSE.

TRENCH BACKFILL UNDER PAVEMENT SHALL BE CA-6. 100% CRUSHED. EXTEND 2 FEET BEYOND THE EDGE OF PAVEMENT.

18" TOTAL COMPACTED BASE AND SUBBASE COURSE CA-6 AGGREGATE COURSE TYPE B, GRADE 8 or 9. 100% CRUSHED. (IDOT Art.301)

THE SURFACE COURSE SHALL BE PLACED WHEN APPROVED BY THE ENGINEER. SURFACE SHALL BE CLEANED AND BITUMINOUS PRIMING MATERIAL SHALL BE APPLIED PRIOR TO FINAL SURFACE COURSE. (IDOT Art. 408.07)

TYPICAL ROADWAY CROSS SECTION
N.T.S.

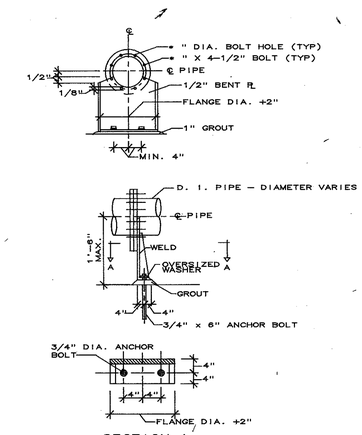

NOTE: * WIDTH VARIES TO MATCH O.D. OF PIPE FLANGE

PIPE ANCHOR DETAIL
N.T.S.

AS-BUILT

MISCELLANEOUS DETAILS

Rezek, Henry, Meisenheimer, and Gende, Inc. — Libertyville, Illinois

SOUTHWEST WASTEWATER PUMP STATION - CITY OF NAPERVILLE, ILLINOIS

Job No. 93080
Date JANUARY, 1993

G-3

AS-BUILT INFORMATION HAS BEEN PROVIDED BY OTHERS. REZEK, HENRY, MEISENHEIMER, AND GENDE, INC. ASSUMES NO LIABILITY FOR THE ACCURACY OF THE AS-BUILT INFORMATION SHOWN.

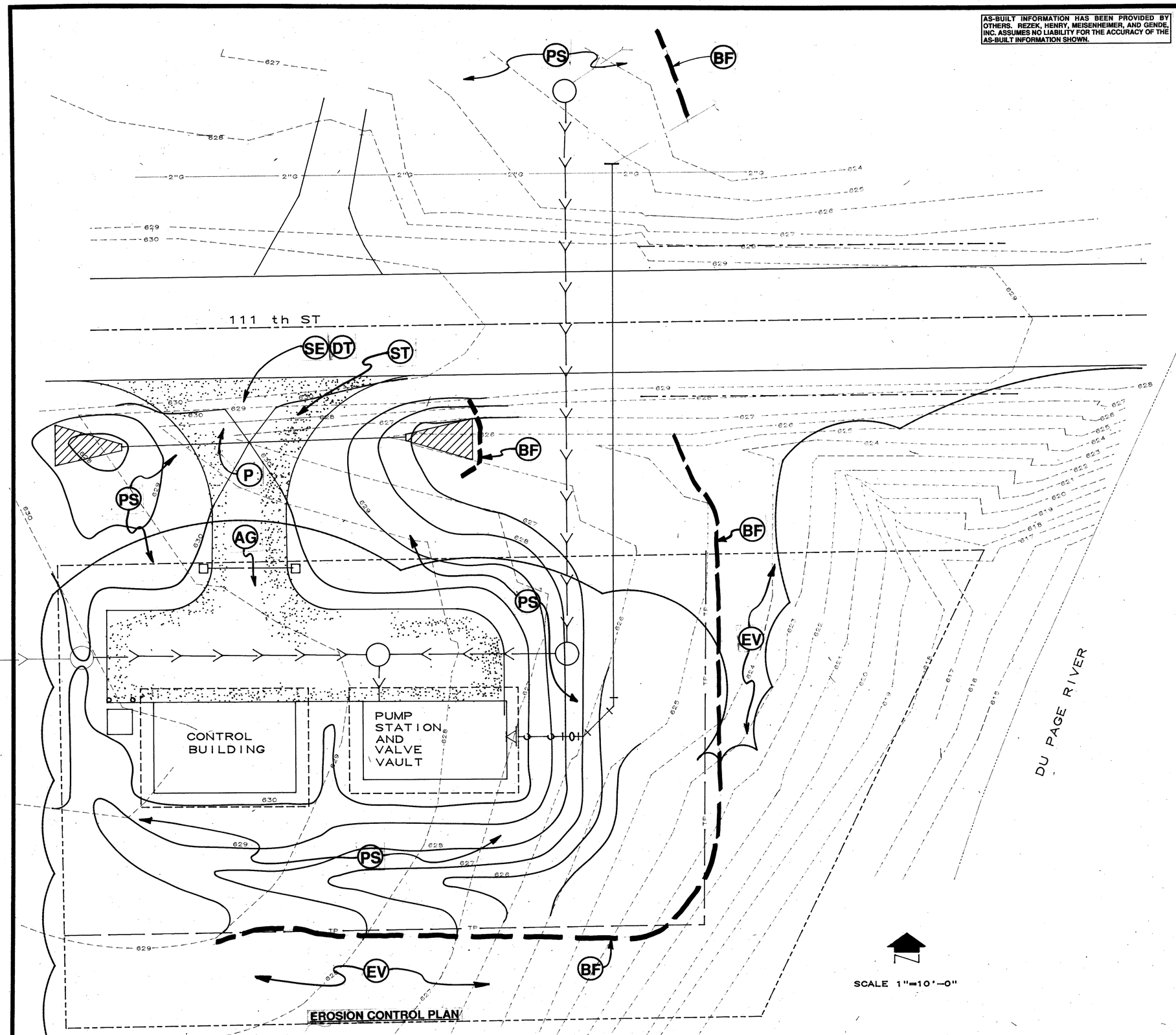

EROSION CONTROL PLAN

ILLINOIS SOIL EROSION AND SEDIMENTATION CONTROL
CONTROL MEASURE SELECTION PROCESS

CONTROL MEASURE GROUP	CONTROL MEASURE	PLAN KEY	CONTROL MEASURE CHARACTERISTICS	TEMPORARY	PERMANENT
VEGETATIVE SOIL COVER	Temporary Seeding		PROVIDES QUICK TEMPORARY COVER TO CONTROL EROSION WHEN PERMANENT SEEDING IS NOT DESIRED OR THE USE OF SEAR IS INAPPROPRIATE.		
	Permanent Seeding		PROVIDES PERMANENT VEGETATIVE COVER TO CONTROL EROSION. FILTERS SEDIMENT FROM WATER. MAY BE PART OF FINAL LANDSCAPE PLAN.		
	Dormant Seeding		SAME AS PERMANENT SEEDING EXCEPT SEEDING IS DONE DURING DORMANT SEASON. HIGHER RATES OF SEED APPLICATION ARE REQUIRED.		
	Sodding		QUICK PERMANENT COVER TO CONTROL EROSION. QUICK WAY TO ESTABLISH VEGETATIVE FILTER STRIP. CAN BE USED ON STEEP SLOPES OR IN DRAINAGEWAYS WHERE SEEDING MAY BE DIFFICULT.		
	Ground Cover		PROVIDES GROUND COVER, SHRUBS AND TREES IN ADDITION TO PERMANENT VEGETATION. MAY BE USED AS PART OF A FINAL LANDSCAPE PLAN ALONG WITH SHRUBS AND TREES.		
NON VEGETATIVE SOIL COVER	Mulching	M	ADDED INSURANCE OF A SUCCESSFUL TEMPORARY OR PERMANENT SEEDING. CONTROLS UNWANTED VEGETATION AND PRESERVES MOISTURE. PROVIDES COVER WHERE VEGETATION CANNOT BE ESTABLISHED.		
	Aggregate Cover	AG	PROVIDES SOIL COVER ON ROADS AND PARKING LOTS AND AREAS WHERE VEGETATION CANNOT BE ESTABLISHED. PREVENTS MUD FROM BEING PICKED UP AND TRANSPORTED OFF SITE.		
	Paving	P	PROVIDES PERMANENT COVER ON PARKING LOTS AND ROADS OR OTHER AREAS WHERE VEGETATION CANNOT BE ESTABLISHED.		
DIVERSIONS	Ridge Diversion		TYPICALLY USED ABOVE SLOPES. USED WHEN AN EXCESS OF SOIL IS AVAILABLE.		
	Channel Diversion		TYPICALLY USED AT TOP OR BASE OF SLOPES. USED WHEN EXCESS SOIL IS NOT AVAILABLE.		
	Combination Diversion		TYPICALLY USED ANYWHERE ON A SLOPE. SOIL TAKEN OUT OF CHANNEL IS USED TO BUILD THE RIDGE.		
	Curb and Gutter		SPECIAL CASE OF DIVERSION. USED IN CONJUNCTION WITH A STREET TO DIVERT WATER FROM AN AREA NEEDING PROTECTION.		
	Benches		SPECIAL CASE OF DIVERSION. CONSTRUCTED WHEN WORKING ON CUT SLOPES TO SHORTEN LENGTHS OF SLOPE AND ADD SLOPE STABILITY.		
WATERWAYS	Bare Channel		PROVIDES AREAS OF CONVEYING RUNOFF TO DESIRED LOCATION. MAY BE USED TO DRAIN DEPRESSIONAL AREAS. ONLY APPLICABLE WHEN VELOCITY OF FLOW IS VERY LOW.		
	Vegetative Channel		PROVIDES ADDED STABILITY TO CHANNEL. USED WHEN VELOCITY OF FLOW IS NOT EXTREMELY FAST.		
	Lined Channel		USED WHEN VEGETATION WILL NOT PROTECT THE CHANNEL AGAINST HIGH VELOCITIES OF FLOW OR WHERE VEGETATION CANNOT BE ESTABLISHED.		
ENCLOSED DRAINAGE	Storm Sewer		CAN BE USED TO CONVEY SEDIMENT LADEN WATER TO SEDIMENT BASIN OR IN CONJUNCTION WITH A WATERWAY.		
	Underdrain		USED TO LOWER WATER TABLE AND INTERCEPT GROUND WATER FOR BETTER VEGETATIVE GROWTH AND SLOPE STABILITY. USED TO CARRY BASE FLOW IN WATERWAYS AND TO DEWATER SEDIMENT BASINS.		
SPILLWAYS	Straight Pipe Spillway		USED FOR RELATIVELY SMALL VERTICAL DROPS AND SMALL FLOWS OF WATER.		
	Drop Inlet Pipe Spillway		SAME AS PIPE SPILLWAY EXCEPT LARGER FLOWS AND LARGE VERTICAL DROPS CAN BE ACCOMMODATED.		
	Weir Spillway		USED FOR RELATIVELY SMALL VERTICAL DROPS AND FLOWS MUCH GREATER THAN PIPE STRUCTURES.		
	Box Inlet Weir Spillway		SAME AS WEIR SPILLWAY EXCEPT LARGER FLOWS CAN BE ACCOMMODATED BECAUSE OF LONGER WEIR LENGTH.		
OUTLETS	Lined Apron		PROTECTS DOWNSTREAM CHANNEL FROM HIGH VELOCITY OF FLOW DISCHARGING FROM STRUCTURES.		
SEDIMENT BASINS	Embankment Sed. Basin		USED WHERE TOPOGRAPHY LENDS ITSELF TO CONSTRUCTING A DAM AND EARTH FILL IS AVAILABLE.		
	Excavated Sed. Basin		USED WHERE EMBANKMENT COULD CAUSE A HAZARD DOWNSTREAM IN CASE OF A FAILURE AND WHEN EXCESS EARTH FILL IS NOT AVAILABLE.		
	Combination Sed. Basin		USED WHEN TOPOGRAPHY IS SUITABLE BUT ADDITIONAL CAPACITY IS NEEDED.		
SEDIMENT FILTERS	Barrier Filter		USED FOR SINGLE LOTS OR DRAINAGE AREAS LESS THAN 1/2 ACRE TO FILTER SEDIMENT FROM RUNOFF.		
	Vegetative Filter		USED ALONG DRAINAGEWAYS OR PROPERTY LINES TO FILTER SEDIMENT FROM RUNOFF. SIZE MUST BE INCREASED IN PROPORTION TO DRAINAGE AREA.		
MUD AND DUST CONTROL	Stabilized Const. Ent.		PREVENT MUD FROM BEING PICKED UP AND CARRIED OFF SITE.		
	Dust and Traffic Control		PREVENTS DUST FROM LEAVING CONSTRUCTION SITE.		

Existing Vegetation (EV) TO REMAIN IN NATURAL STATE

CONSTRUCTION SEQUENCE

1. Install sediment control measures and stabilized construction entrance. (BF) (ST) (SE)
2. Grade site and stockpile soil. (DT) (LA)
3. Preserve existing vegetation. (EV)
4. Install aggregate cover and paving. (AG) (P)
5. Finish grading and spreading topsoil.
6. Permanent seeding and protection of all exposed areas. (PS)
7. Erosion control measures are to be maintained, such as, repairs, until such time as all areas of seeding, etc., are permanently established in conformance with erosion and sedimentation control regulations of Will County, Illinois.

NOTES

1. The following person shall be in responsible charge of maintaining erosion control and detention measures during construction:

   General Contractor

2. All areas of construction or disturbed by construction are to be vegetated as part of this contract.

NOTE: CONTRACTOR IS TO REFER TO "PROCEDURES AND STANDARDS FOR URBAN SOIL EROSION AND SEDIMENTATION CONTROL IN ILLINOIS", REVISED JULY, 1988 FOR ACCEPTABLE EROSION CONTROL PRACTICES

AS-BUILT EROSION CONTROL PLAN

Rezek, Henry, Meisenheimer, and Gende, Inc. — Libertyville, Illinois

SOUTHWEST WASTEWATER PUMP STATION - CITY OF NAPERVILLE, ILLINOIS

Job No. 93080
Date JANUARY 1993

G-4

AS-BUILT INFORMATION HAS BEEN PROVIDED BY OTHERS. REZEK, HENRY, MEISENHEIMER, AND GENDE, INC. ASSUMES NO LIABILITY FOR THE ACCURACY OF THE AS-BUILT INFORMATION SHOWN.

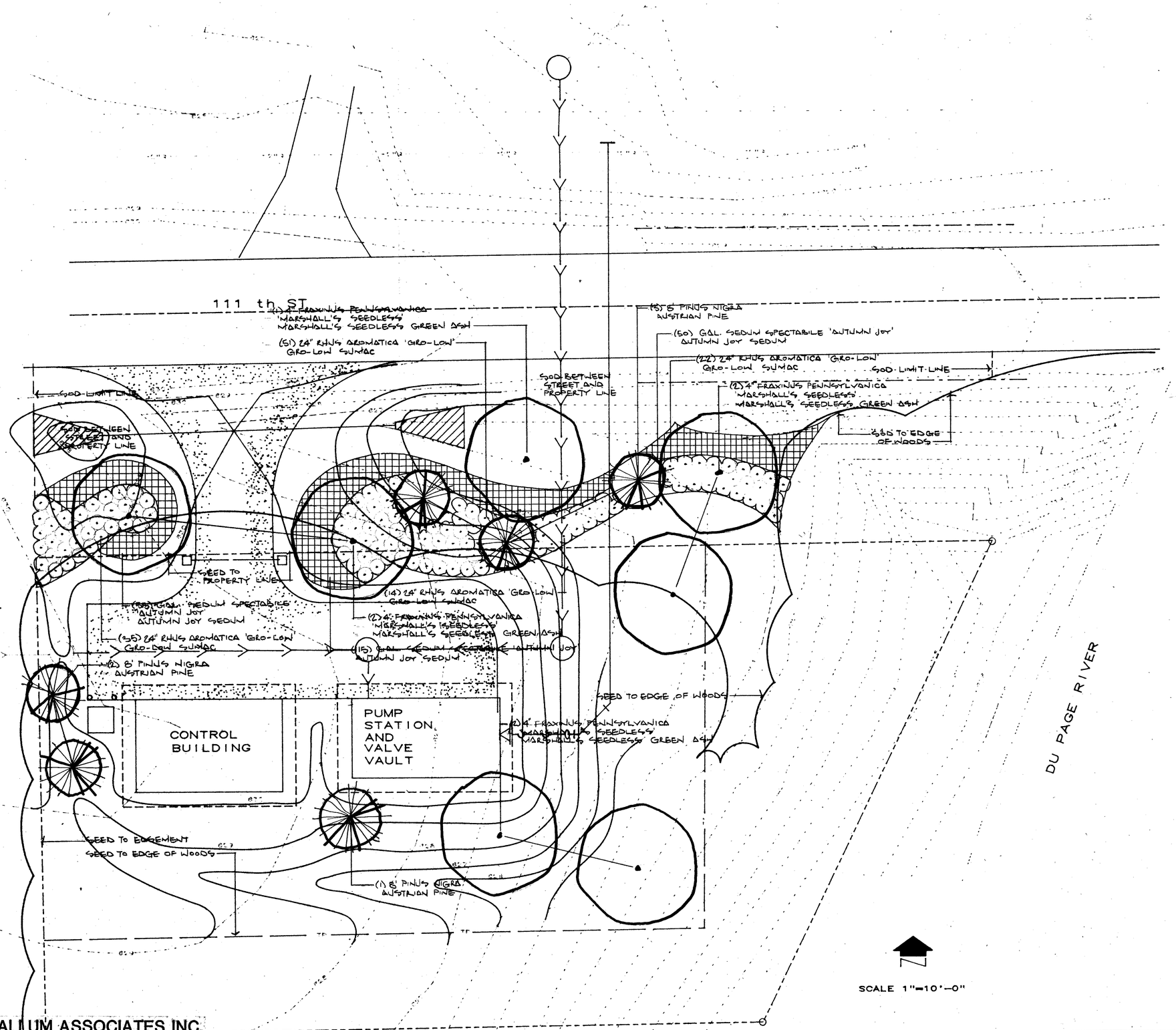

DAVID R. McCALLUM ASSOCIATES INC.

Rezek, Henry, Meisenheimer, and Gende, Inc. — Libertyville, Illinois

SOUTHWEST WASTEWATER PUMP STATION - CITY OF NAPERVILLE, ILLINOIS

AS-BUILT LANDSCAPING PLAN

Job No. [illegible]

Date [illegible]ARY, 1993

G-5

AS-BUILT INFORMATION HAS BEEN PROVIDED BY OTHERS. REZEK, HENRY, MEISENHEIMER, AND GENDE, INC. ASSUMES NO LIABILITY FOR THE ACCURACY OF THE AS-BUILT INFORMATION SHOWN.

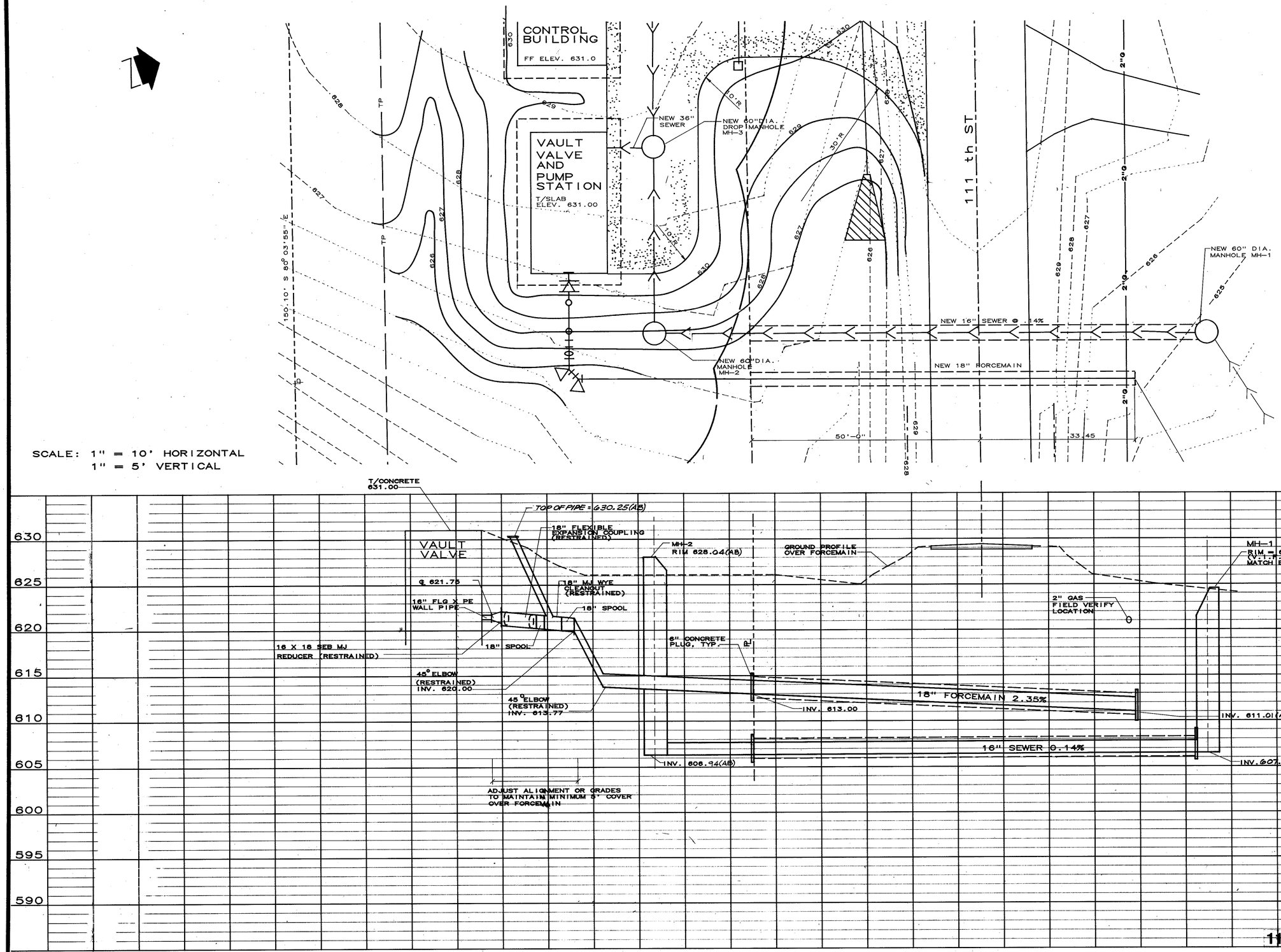

AS-BUILT
111TH STREET CROSSING PLAN

Rezek, Henry, Meisenheimer, and Gende, Inc. — Libertyville, Illinois

SOUTHWEST WASTEWATER PUMP STATION - CITY OF NAPERVILLE, ILLINOIS

Job No. 93080
Date JANUARY, 1993

G-6

AS-BUILT INFORMATION HAS BEEN PROVIDED BY OTHERS. REZEK, HENRY, MEISENHEIMER, AND GENDE, INC. ASSUMES NO LIABILITY FOR THE ACCURACY OF THE AS-BUILT INFORMATION SHOWN.

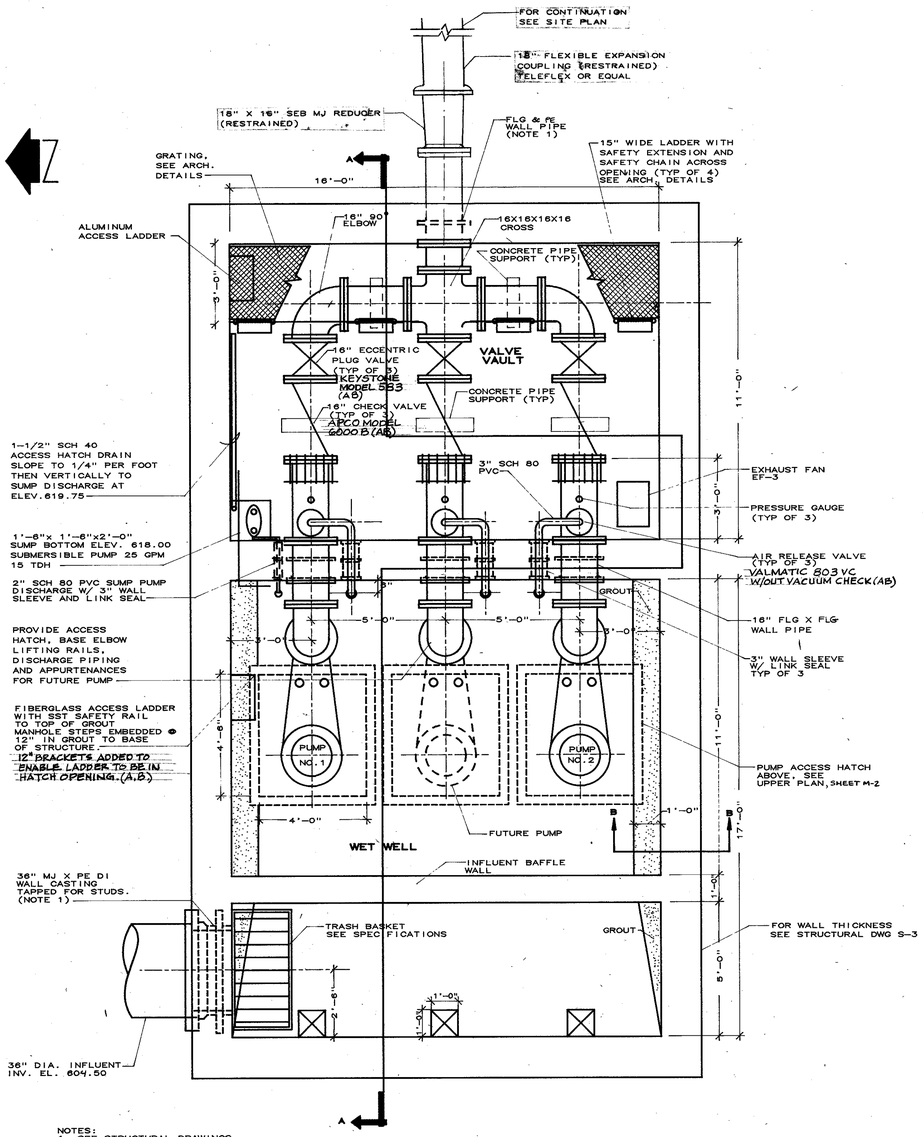

NOTES:
1. SEE STRUCTURAL DRAWINGS FOR WALL THICKNESSES FOR WALL CASTINGS.

PUMP STATION LOWER PLAN
SCALE 3/8"=1'

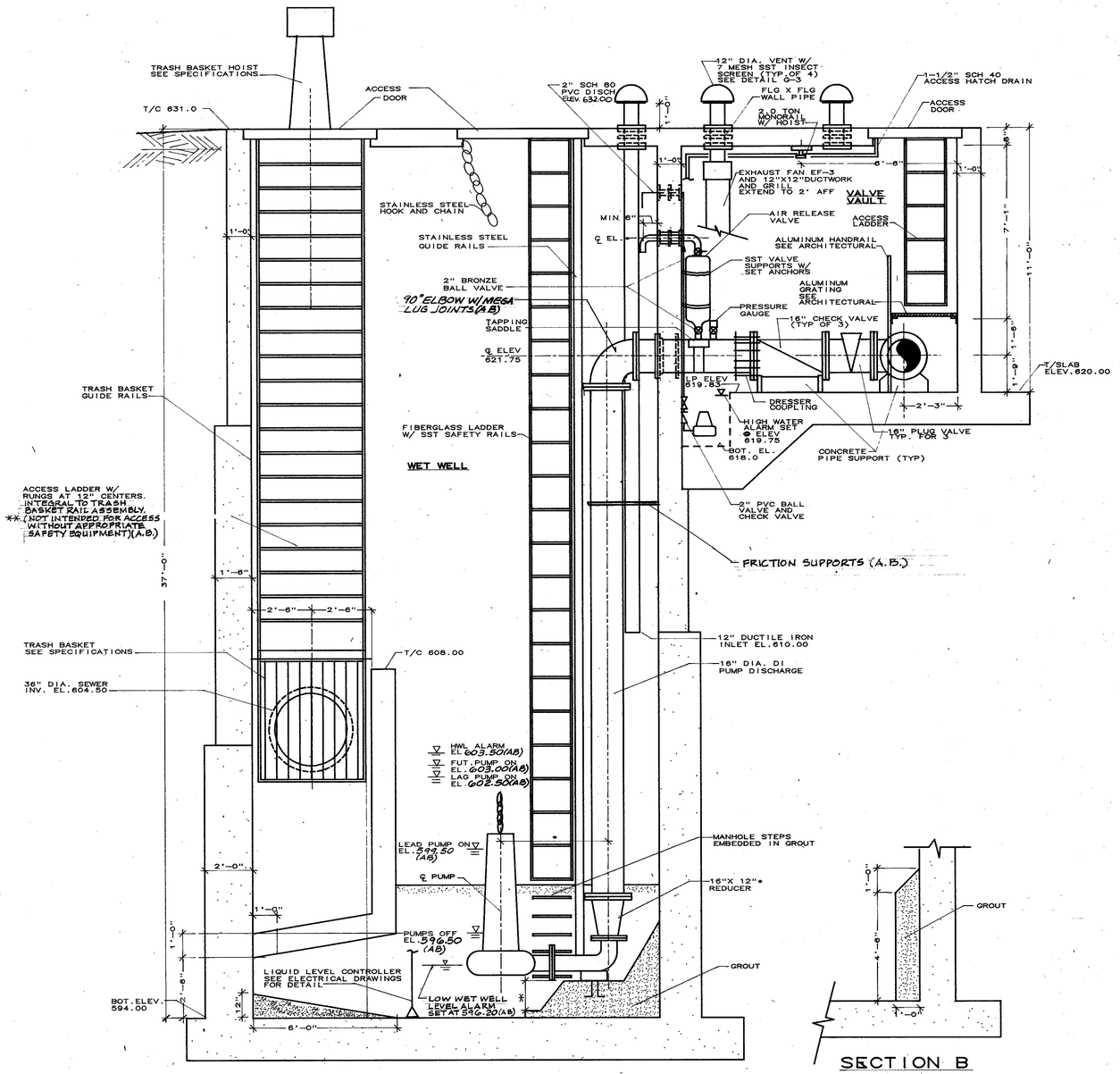

SECTION A
SCALE 3/8"=1'

SECTION B
SCALE 3/8"=1'

NOTES:
1. SELECTED PUMP MANUFACTURER SHALL PROVIDE DETAILED LAYOUT OF PUMPS, PUMP ACCESS HATCHES, GUIDE RAILS, BASE DETAIL, ETC. CONTRACTOR SHALL PROVIDE COMPLETE DETAILS FOR DESIGN CHANGES NECCESSARY FOR INSTALLATION OF THE SELECTED EQUIPMENT. } FLYGT CP 3300-X, 77HP PUMPS (A.B.)
2. *LOCATION AND DIMENSIONS TO BE DETERMINED BY CONTRACTOR AFTER FINAL SELECTION OF EQUIPMENT.

AS-BUILT
PUMP STATION PLAN AND SECTION

AS-BUILT INFORMATION HAS BEEN PROVIDED BY OTHERS. REZEK, HENRY, MEISENHEIMER, AND GENDE, INC. ASSUMES NO LIABILITY FOR THE ACCURACY OF THE AS-BUILT INFORMATION SHOWN.

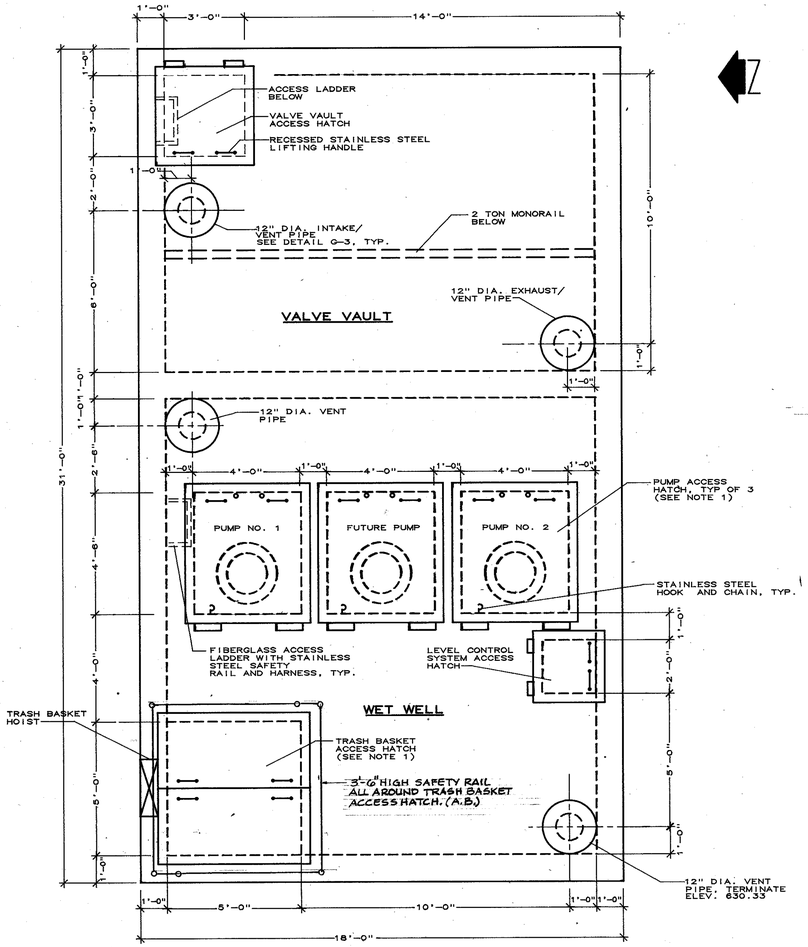

UPPER PLAN — ELEV 631.00

SCALE 3/8"=1'

NOTES:
1. CONTRACTOR SHALL COORDINATE ACCESS HATCH SIZE AND LOCATION WITH EQUIPMENT MANUFACTURER.
2. FOR VENT PIPE DETAIL SEE SHEET G-3.

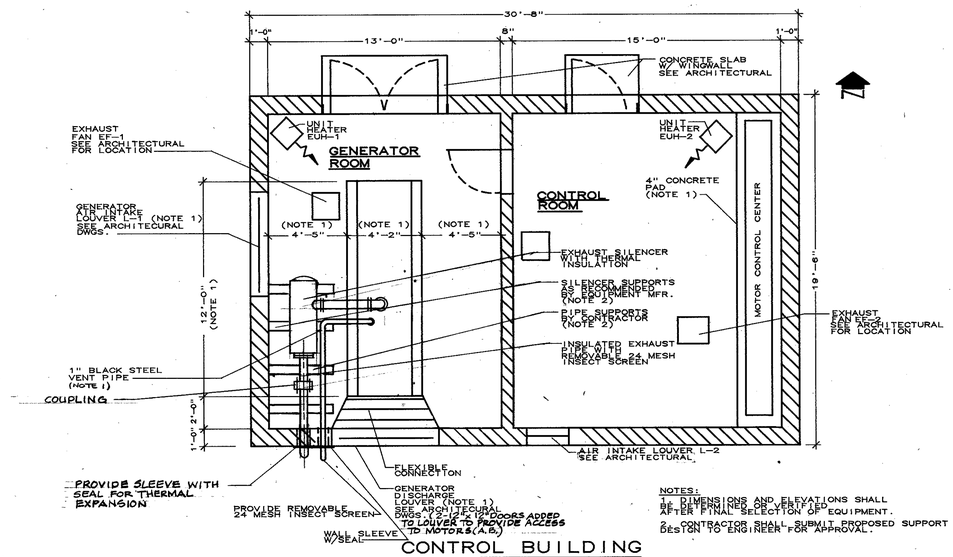

NOTES:
1. DIMENSIONS AND ELEVATIONS SHALL BE DETERMINED OR VERIFIED AFTER FINAL SELECTION OF EQUIPMENT.
2. CONTRACTOR SHALL SUBMIT PROPOSED SUPPORT DESIGN TO ENGINEER FOR APPROVAL.

CONTROL BUILDING

SCALE 1/4"=1'

AS-BUILT
PUMP STATION UPPER PLAN AND CONTROL BUILDING

Rezek, Henry, Meisenheimer, and Gende, Inc. — Libertyville, Illinois	SOUTHWEST WASTEWATER PUMP STATION - CITY OF NAPERVILLE, ILLINOIS	Job No. 93080 / Date JANUARY, 1993	M-2

AS-BUILT INFORMATION HAS BEEN PROVIDED BY OTHERS. REZEK, HENRY, MEISENHEIMER, AND GENDE, INC. ASSUMES NO LIABILITY FOR THE ACCURACY OF THE AS-BUILT INFORMATION SHOWN.

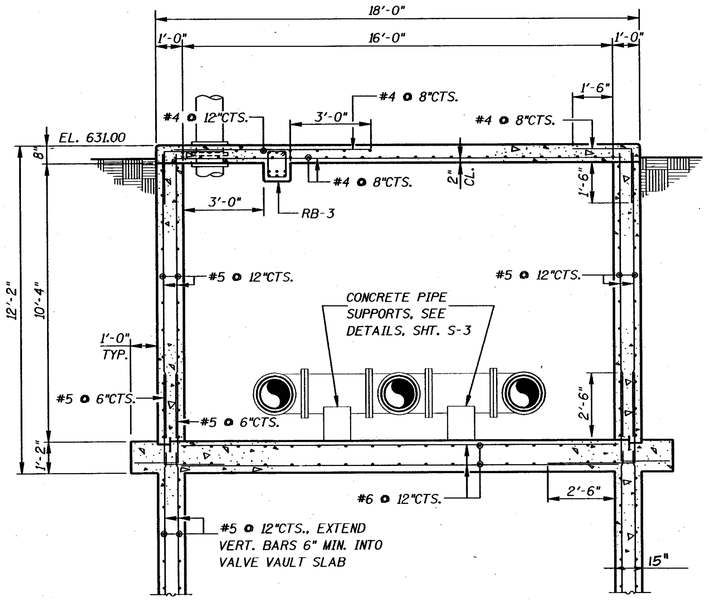

SECTION A-A

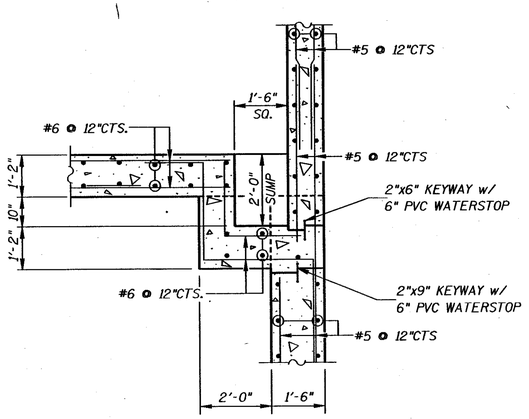

DETAIL AT SUMP

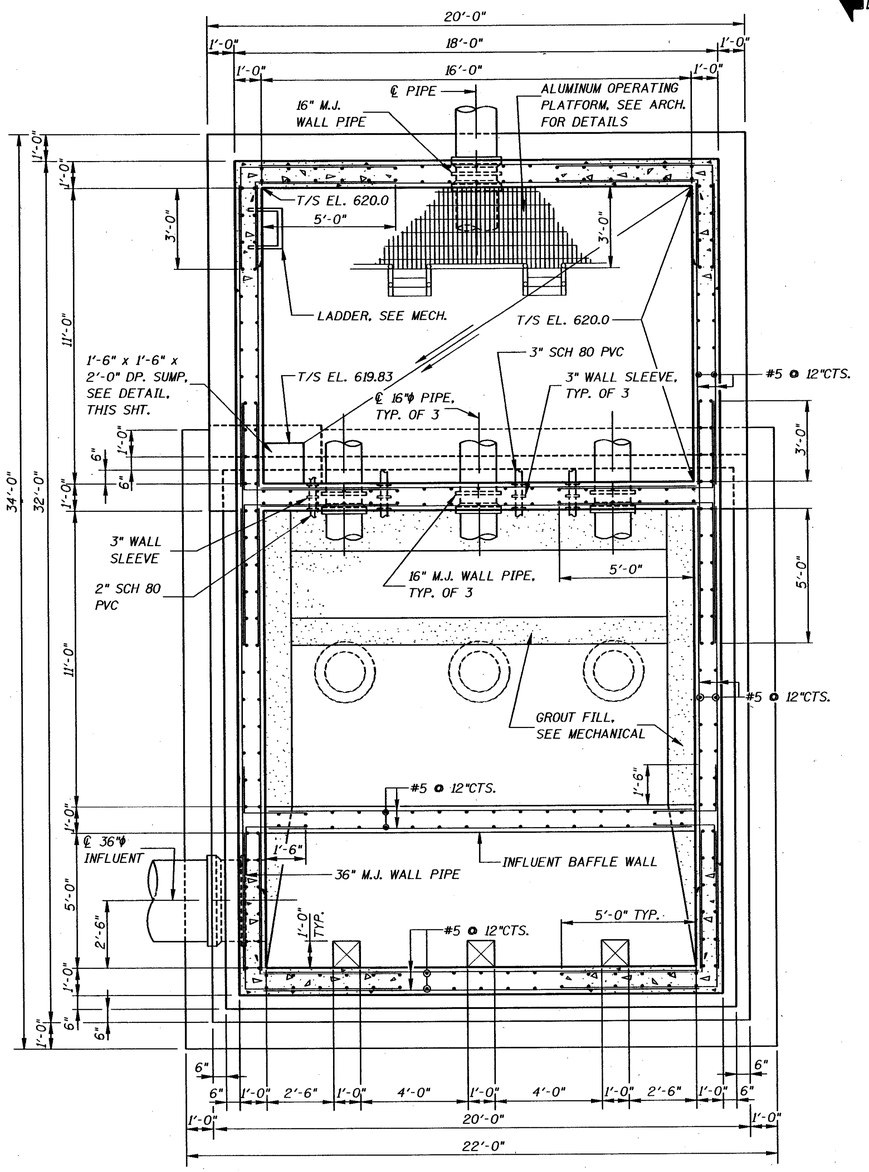

SECTIONAL PLAN AT EL. 624.00

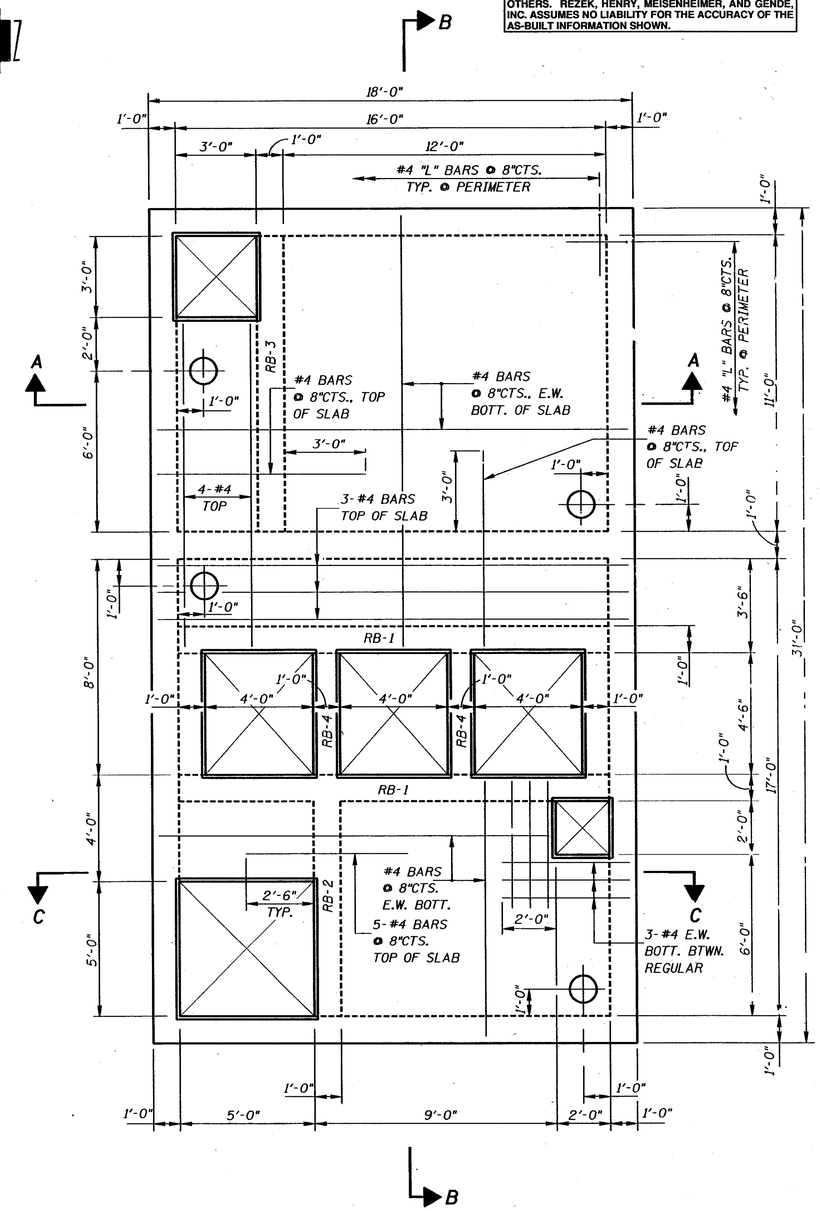

TOP PLAN

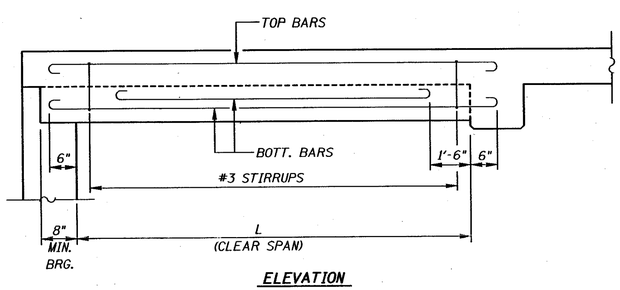

ELEVATION

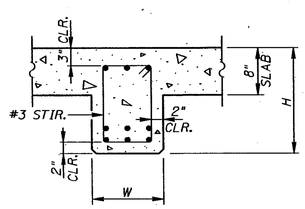

SECTION

TYPICAL BEAM DETAILS

NOTE: BEAMS SHALL BE CAST MONOLITHICALLY WITH SLAB.

BEAM SCHEDULE

MARK	CLR. SPAN	SIZE		MIN. BRG. AT WALLS	REINFORCEMENT				
					MAIN BARS		STIRRUPS		
	L	W	H		BOTT. BARS	TOP BARS	NO. & SIZE	SPACING EA. END	SHAPE
RB-1	16'-0"	12"	18"	8"	6-#5 2 LAYERS	3-#5	19-#3	4 @ 6"; 6 @ 12"	
RB-2	8'-0"	12"	16"	8"	3-#6	3-#4	9-#3	2 @ 6"; 3 @ 12"	
RB-3	11'-0"	12"	16"	8"	3-#6	3-#4	13-#3	3 @ 6"; 4 @ 12"	
RB-4	4'-6"	12"	14"	N/A	2-#5	2-#5	5-#3	1 @ 3"; 2 @ 12"	

NOTE:

1. ALL REINFORCEMENT BARS SHALL BE EPOXY COATED.
2. SEE MECHANICAL PLANS FOR ACCESS HATCHES AND FRAMES.
3. COORDINATE WITH MECHANICAL PLANS AND VERIFY ALL PIPE OPENINGS AND SLEEVES TO BE CAST INTO WALLS AND SLABS.
4. CUT OR SPACE REINFORCEMENT BARS IN FIELD TO MISS PIPE OPENINGS THROUGH WALLS.

AS-BUILT
PLANS AND SECTIONS

Rezek, Henry, Meisenheimer and Gende, Inc. - Libertyville, Illinois

SOUTHWEST WASTEWATER PUMP STATION - CITY OF NAPERVILLE, ILLINOIS

Job No. 93080
Date JANUARY, 1993

S-1

AS-BUILT INFORMATION HAS BEEN PROVIDED BY OTHERS. REZEK, HENRY, MEISENHEIMER, AND GENDE, INC. ASSUMES NO LIABILITY FOR THE ACCURACY OF THE AS-BUILT INFORMATION SHOWN.

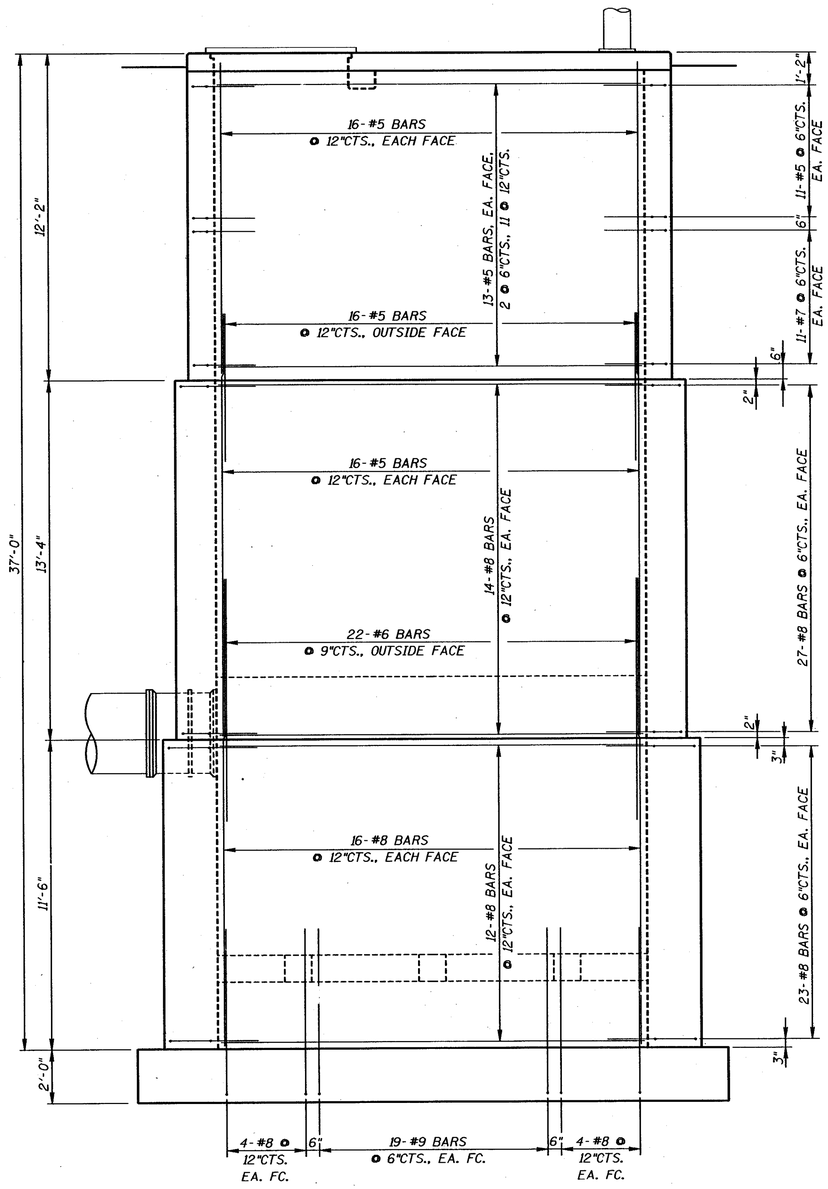

WEST ELEVATION

(EAST ELEVATION SIMILAR)

NOTE:
CUT WATERSTOP AT INFLUENT PIPE TO MATCH PIPE CONTOUR AND EPOXY BOND TO FACE OF WALL PIPE TO FORM CONTINUOUS WATERSTOP.

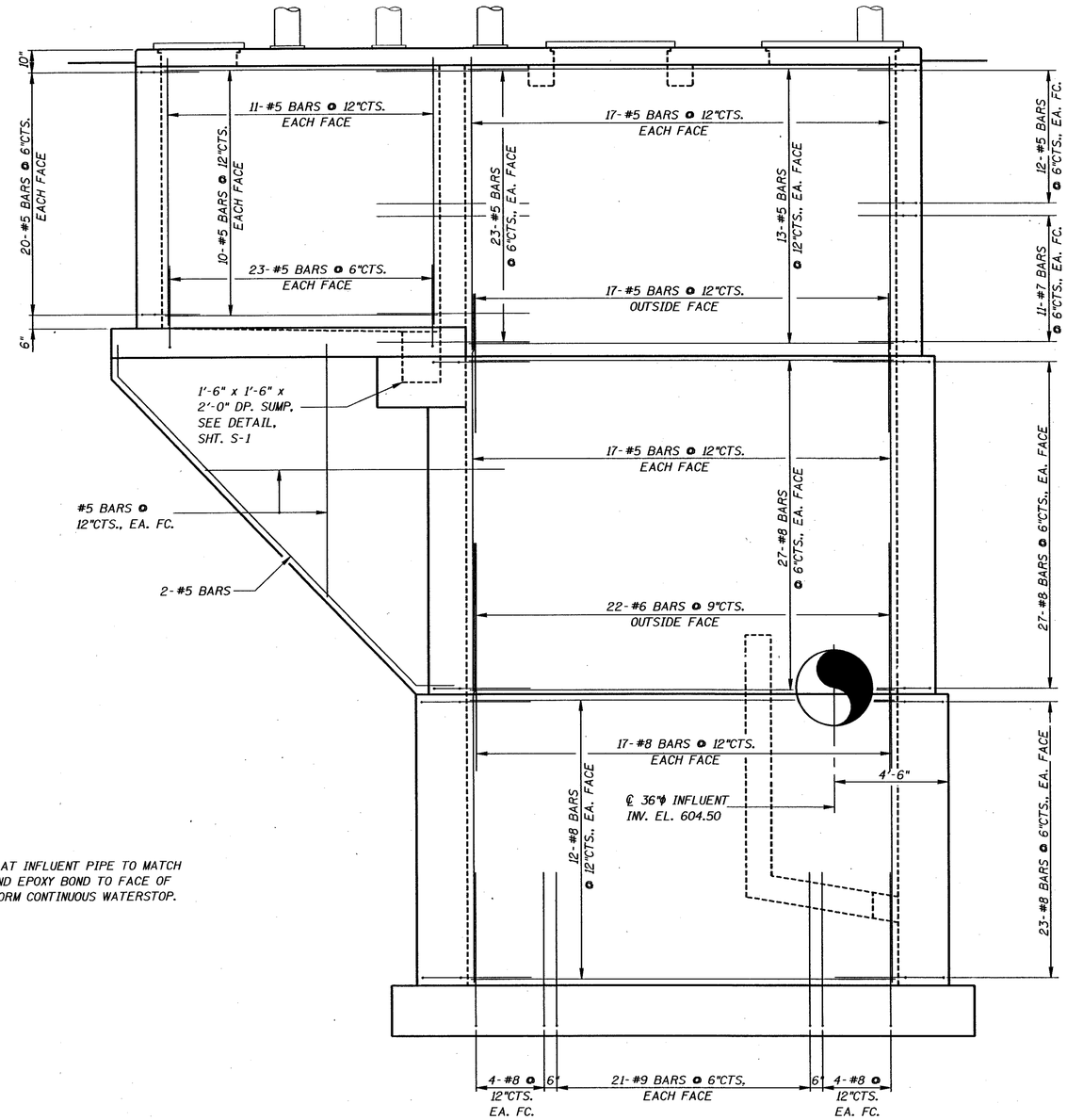

SOUTH ELEVATION

(NORTH ELEVATION OPPOSITE HAND SIMILAR)

AS-BUILT
STRUCTURAL ELEVATIONS

Rezek, Henry, Meisenheimer and Gende, Inc. - Libertyville, Illinois	SOUTHWEST WASTEWATER PUMP STATION - CITY OF NAPERVILLE, ILLINOIS	Job No. 93080 / Date JANUARY, 1993	S-2

AS-BUILT INFORMATION HAS BEEN PROVIDED BY OTHERS. REZEK, HENRY, MEISENHEIMER, AND GENDE, INC. ASSUMES NO LIABILITY FOR THE ACCURACY OF THE AS-BUILT INFORMATION SHOWN.

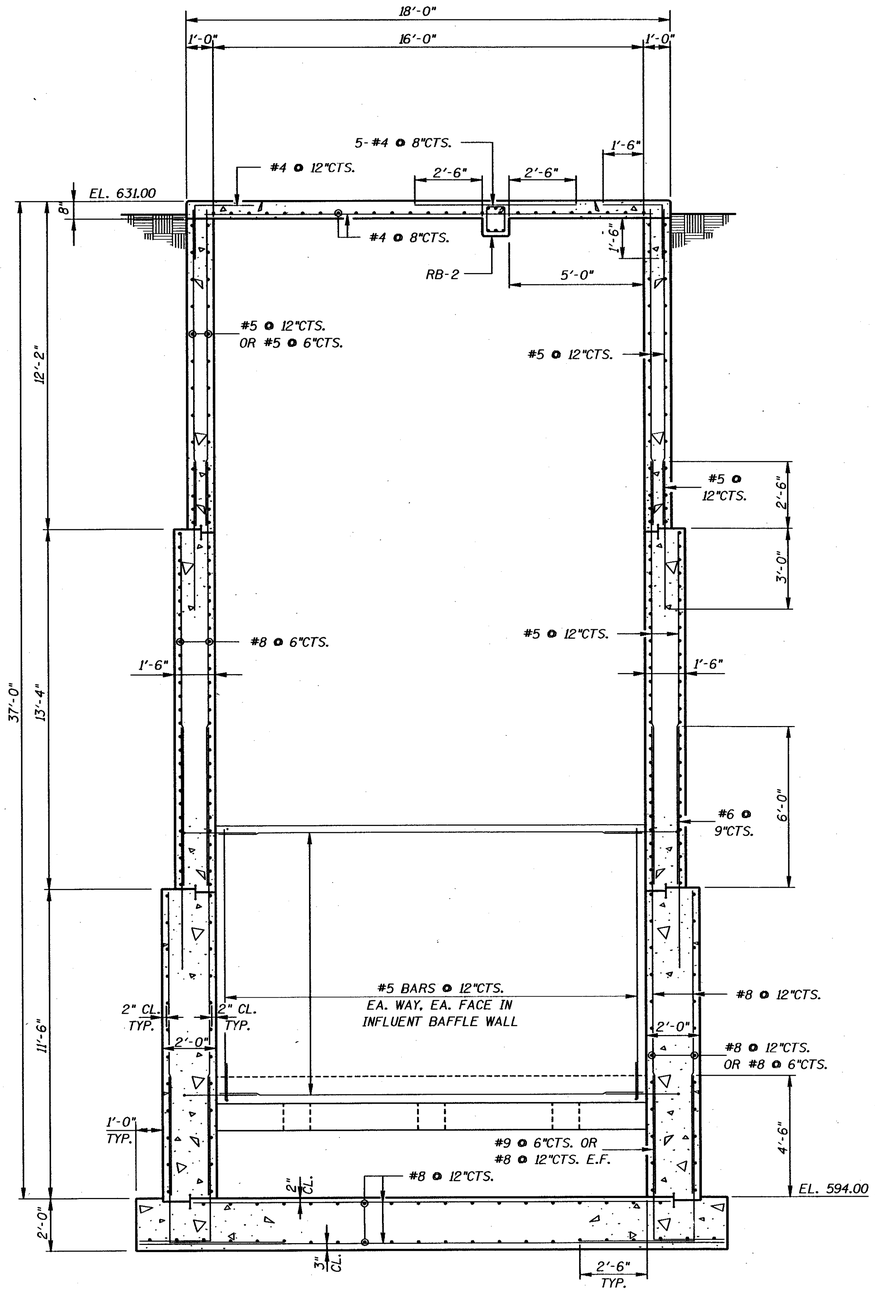

SECTION C-C

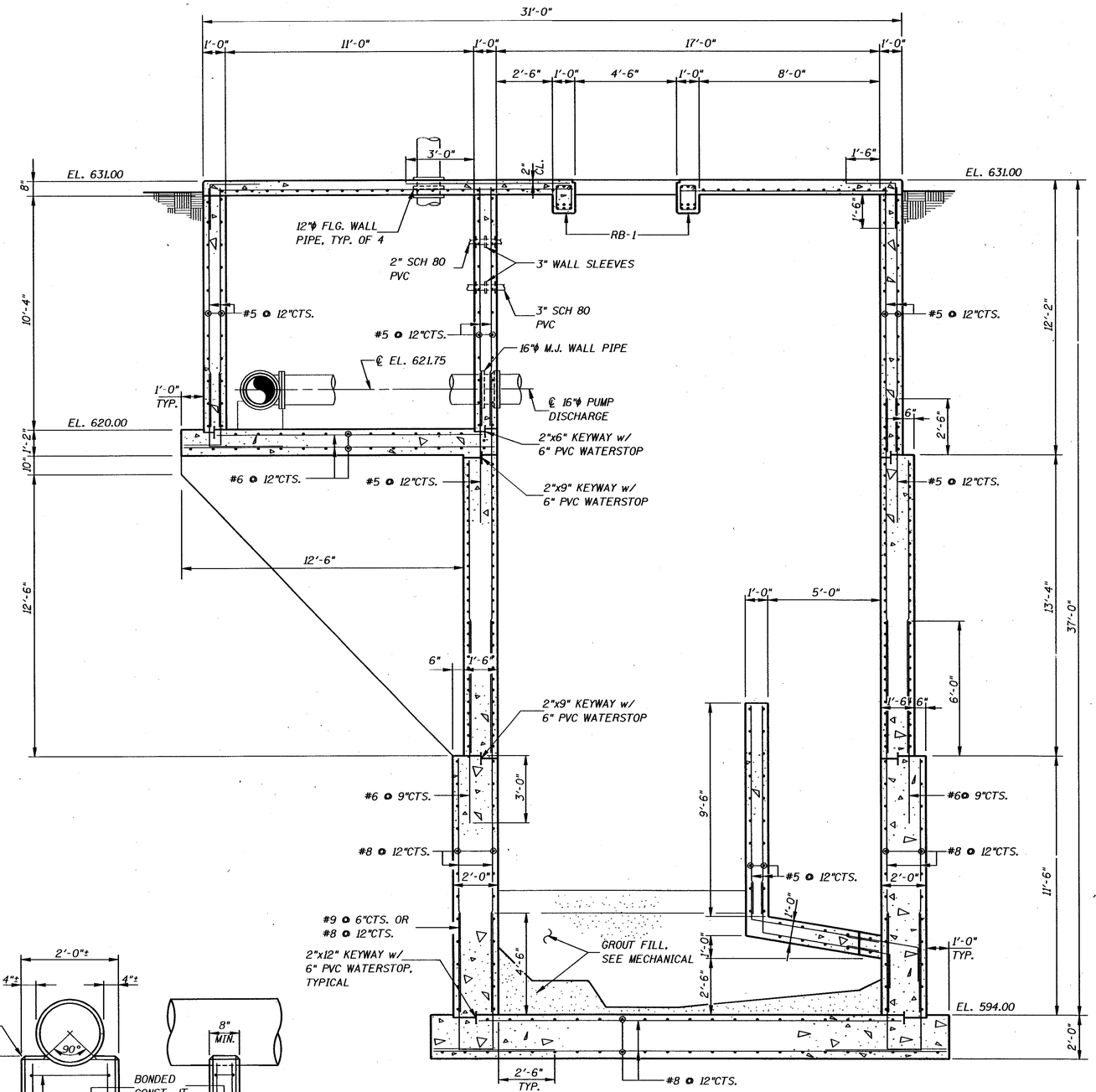

SECTION B-B

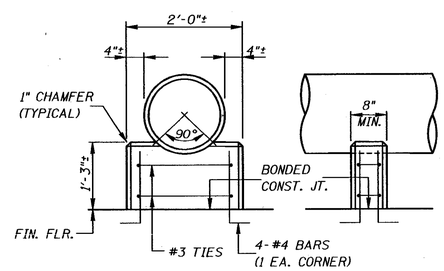

ELEVATION END VIEW

CONCRETE PIPE SUPPORT DETAILS

AS-BUILT
STRUCTURAL SECTIONS

AS-BUILT INFORMATION HAS BEEN PROVIDED BY OTHERS. REZEK, HENRY, MEISENHEIMER, AND GENDE, INC. ASSUMES NO LIABILITY FOR THE ACCURACY OF THE AS-BUILT INFORMATION SHOWN.

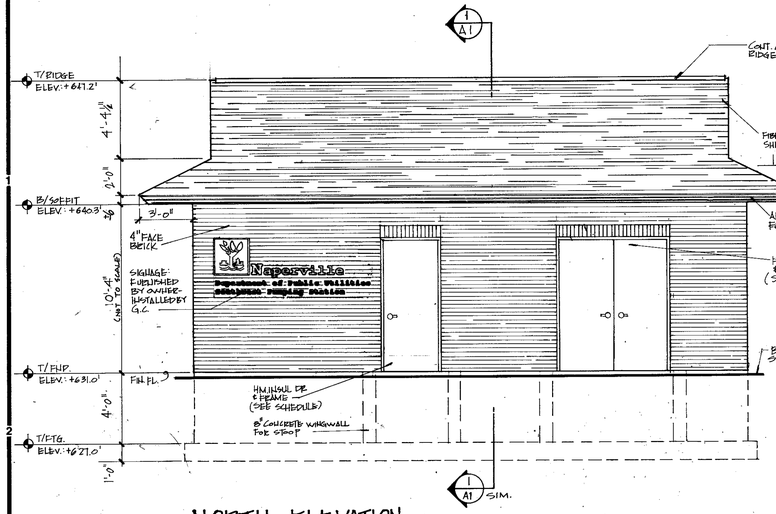

NORTH ELEVATION
1/4"=1'-0"

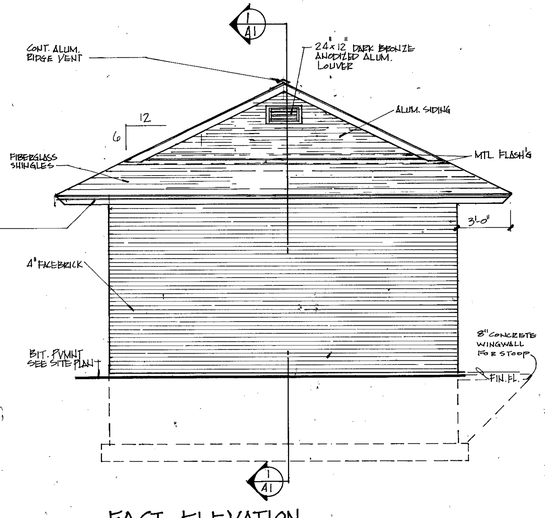

EAST ELEVATION
1/4"=1'-0"

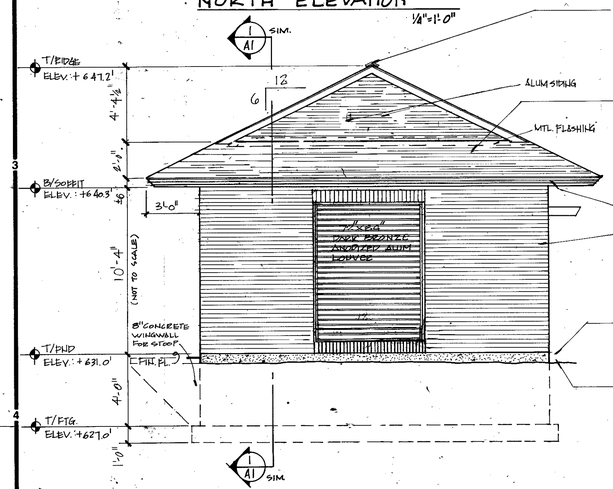

WEST ELEVATION
1/4"=1'-0"

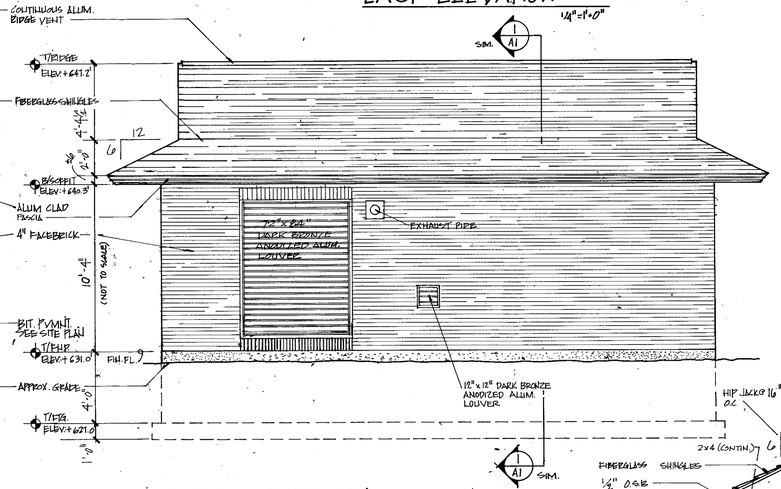

SOUTH ELEVATION
1/4"=1'-0"

MECHANICAL EQUIPMENT LIST

EF-1 Generator RM General Exhaust Fan Carnes, ~~or Approved Equal~~, model VCDB 030. Unit to Exhaust 300 CFM @ 1/8 " SP., 120 V / 1 ϕ Motor.

EF-2 Control RM General Exhaust Fan Carnes, ~~or Approved Equal~~, Model VCDB 030. Unit to Exhaust 250 CFM @ 1/8 " SP., 120 V / 1 ϕ Motor. VIOK 12T3T (A.B)

EF-3 Valve Vault General Exhaust Fan Carnes, ~~or Approved Equal~~ Model ~~VBB-12~~. Unit to Exhaust 900 CFM @ 1/4 " S.P. , 1/4 HP, 120 V / 1 ϕ Motor. 5A (A.B)

EUH-1 Generator RM. Electric Unit Heater Berko or Approved Equal, Model HUH-748-~~TA-5~~. Unit Capacity: 7.5 KW, 480V, 3 Phase. Unit to Have Integral Thermostat and be Complete with all Mounting Hardware. 5A (A.B)

EUH-2 Control RM Electric Unit Heater Berko, or Approved Equal, Model HUH-548-~~TA-5~~. Unit Capacity: 5 KW, 480 volt, 3 phase. Unit to Have Integral Thermostat and be Complete With all Mounting Hardware.

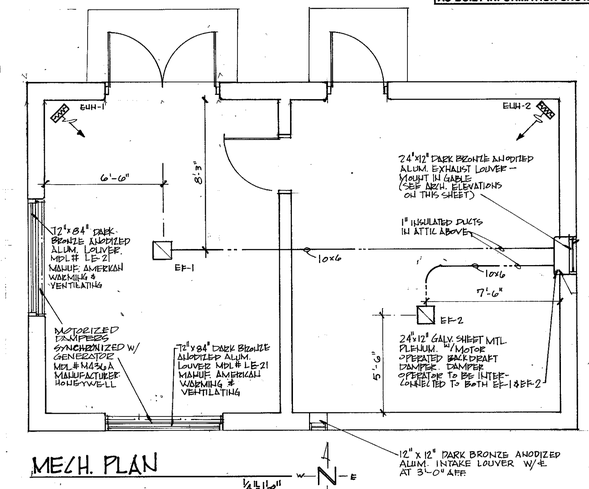

MECH. PLAN
1/4"=1'-0"

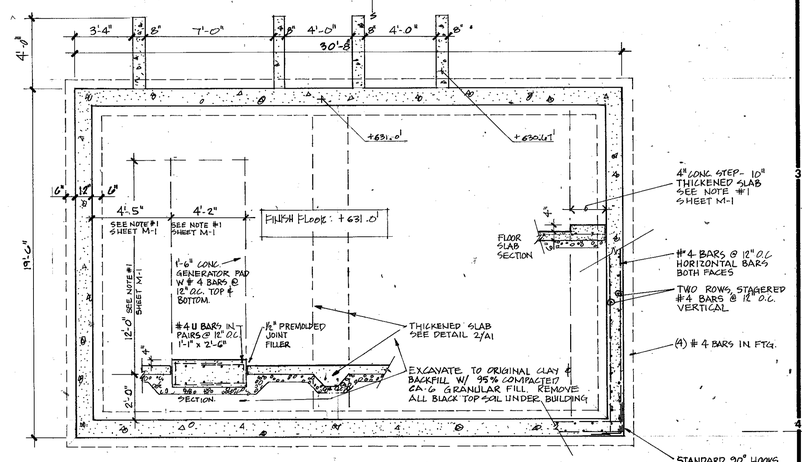

FOUNDATION PLAN
1/4"=1'-0"

ELEVATION - ENTRANCE GATE
1/4"=1'-0"

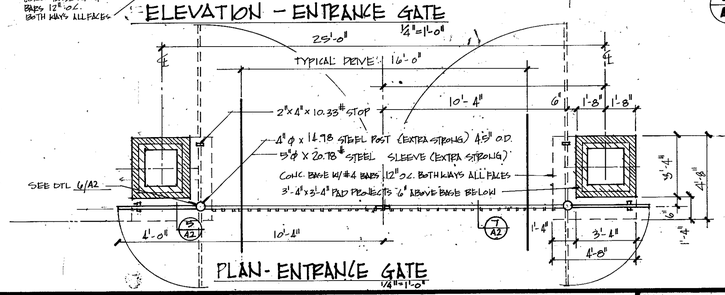

PLAN - ENTRANCE GATE
1/4"=1'-0"

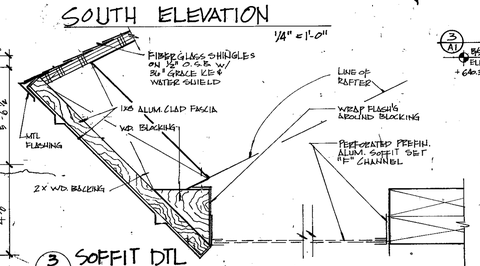

3/A1 SOFFIT DTL

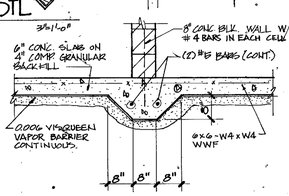

2/A1 THICKENED SLAB
1/2"=1'-0"

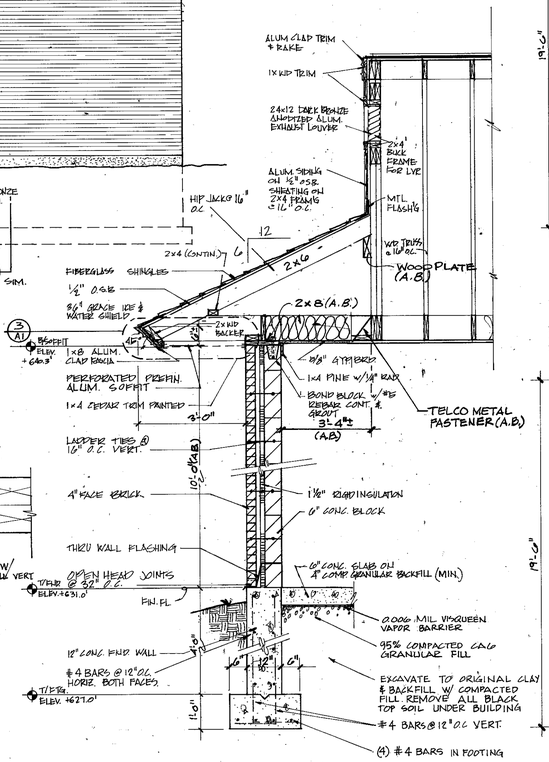

1/A1 TYPICAL WALL SECTION
1/2"=1'-0"

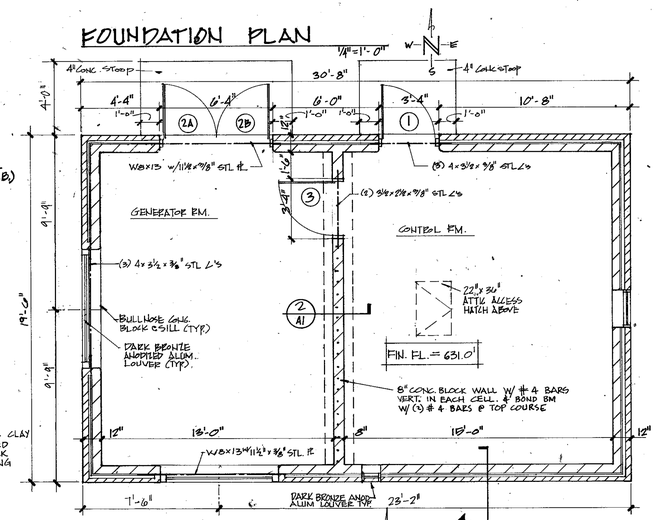

FLOOR PLAN
1/4"=1'-0"

FOR DR & HARDWARE SCHEDULE - SEE SHT. A2

AS-BUILT

PLANS AND ELEVATIONS

Daniel K. Bleck ARCHITECTS, P.C. 350 North Milwaukee Avenue Libertyville, Illinois 60048 (708) 367-9449 Fax (708) 362-0214	REZEK, HENRY, MEISENHEIMER, and GENDE Inc. LIBERTYVILLE, ILLINOIS	NAPERVILLE SOUTHWEST WASTEWATER PUMP STATION	DATE: 2-8-93 REV JANUARY, 1993	RHM&G Job No. 93080 DKB Job No. 5488	SHEET: A-1 OF:

Cad Drafting, Inc. 80574 Form 8031

AS-BUILT INFORMATION HAS BEEN PROVIDED BY OTHERS. REZEK, HENRY, MEISENHEIMER, AND GENDE, INC. ASSUMES NO LIABILITY FOR THE ACCURACY OF THE AS-BUILT INFORMATION SHOWN.

DOOR AND HARDWARE SCHEDULE

DOOR NO.	HINGE	LOCK	KICK	CLOS.	STOP	MISC	SIZE	TYPE	FACE	CORE	FRAME	LABEL	DOOR NO.
1	H1	L1	K1	C1	-	M1,2,3	3'-0"x 7'-2"	T1	H.M.	INSUL.	H.M.	-	1
2A	H1	L1	K1	C1	-	M1,2,3	3'-0"x 7'-2"	T1	H.M.	INSUL.	H.M.	-	2A
2B	H1	L2	K1	C1	-	M1,2,3,4	3'-0"x 7'-2"	T1	H.M.	INSUL.	H.M.	-	2B
3	H1	L3	K1	C1	-	-	3'-0"x 7'-2"	T1	H.M.	-	H.M.	-	3

DOOR TYPES

T1 — OUTSIDE OF DOORS WERE GALVANIZED (A.B.)

DOOR HARDWARE:

SEE SPECIFICATIONS FOR MORE INFORMATION

HINGES:
H1 — 4 1/2" x 4 1/2 HINGES (A.B.)

LOCK SET:
L1 — "SCHLAGE" HEAVY DUTY MORTISE, L SERIES FUNCTION L9453 (ENTRANCE LOCK), LEVER #07, FINISH US10
L2 — "SCHLAGE" HEAVY DUTY MORTISE, L SERIES FUNCTION L0172 (DUMMY TRIM), LEVER #07, FINISH US10
L3 — "SCHLAGE" HEAVY DUTY MORTISE, L SERIES FUNCTION L9010 (PASSAGE LATCH), LEVER #07, FINISH US10

CLOSER:
C1 — "LCN" 4040H, FINISH US10

KICK:
K1 — "BROOKLINE" 14 ga. 12" X 2" LESS THEN WIDTH BOTH SIDES OF DOOR

MISC.:
M1 — JAMB AND HEAD WEATHERSTRIP- "REESE" #77NOUR, POLYURETHANE, DURANODIC DARK BRONZE
M2 — SILL WEATHERSTRIP- "REESE" #2659NFOUR, POLYURETHANE, FINISH DURANODIC DARK BRONZE
M3 — THRESHOLD- "REESE" #483DURVPG, FINISH DURANODIC DARK BRONZE
M4 — EXTENSION FLUSH BOLTS- "HAGER" #281D WITH #280X DUST PROOF STRIKE

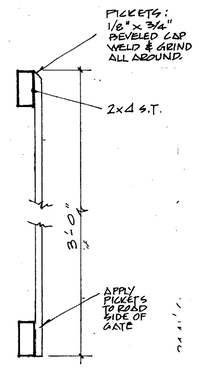

7 / A2 GATE SECTION 1 1/2" = 1'-0"

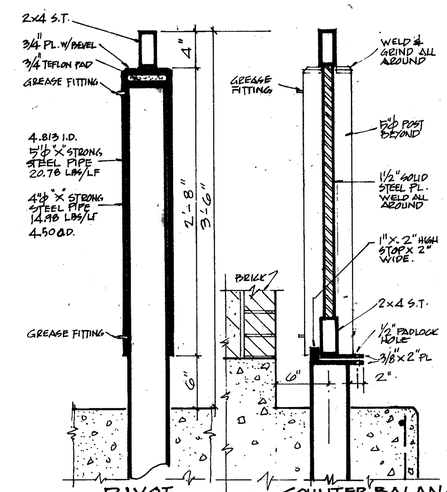

6 / A2 PIVOT POST SEC. 1 1/2" = 1'-0"

5 / A2 COUNTER BALANCE SECTION & STOP DETAIL 1 1/2" = 1'-0"

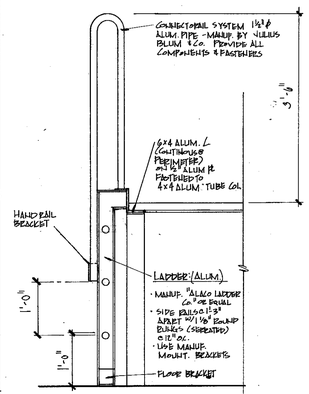

4 / A2 SECTION @ LADDER
PER: O.S.H.A. & CODES. 3/4" = 1'-0"

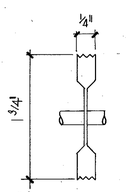

"1" BAR SECTION
FULL SCALE

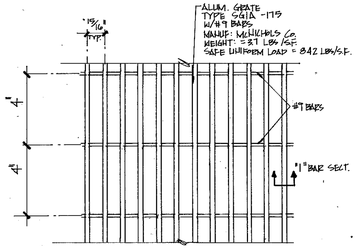

3 / A2 GRATE DETAIL
3/4" = 1'-0"

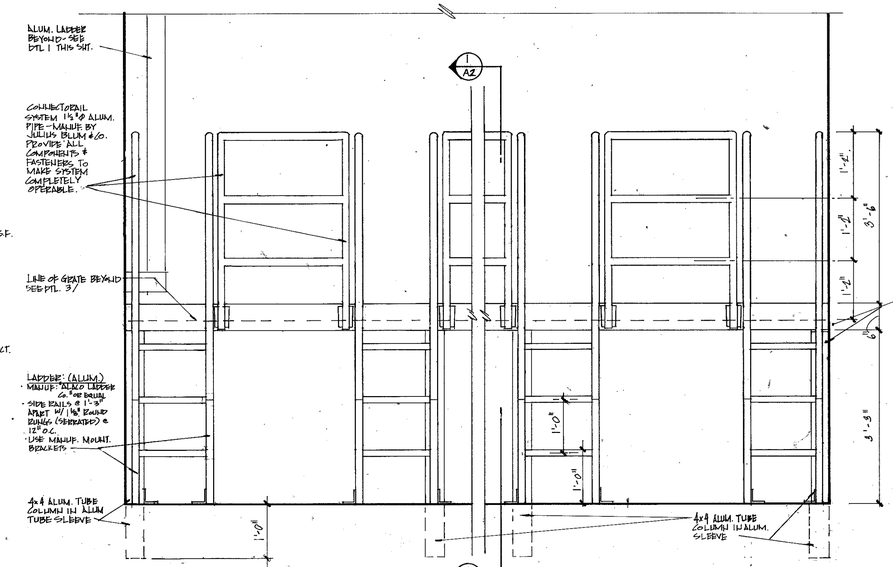

2 / A2 RAIL ELEVATION
3/4" = 1'-0"

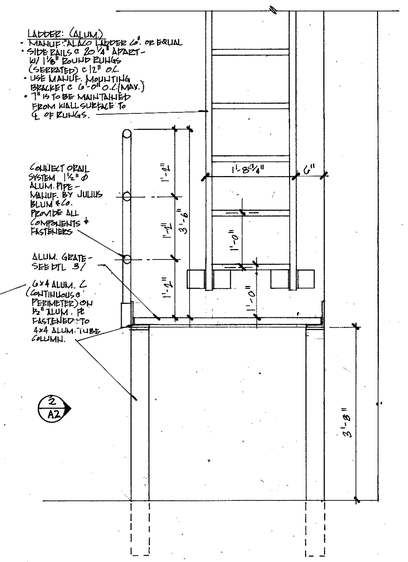

1 / A2 SECTION
3/4" = 1'-0"

AS-BUILT

MISCELLANEOUS DETAILS

Daniel K. Bleck ARCHITECTS, P.C. 350 North Milwaukee Avenue Libertyville, Illinois 60048 (708) 367-9449 Fax (708) 362-0214

REZEK, HENRY, MEISENHEIMER, and GENDE Inc.
LIBERTYVILLE, ILLINOIS

NAPERVILLE SOUTHWEST WASTEWATER PUMP STATION

DATE: 2-8-93 REV. JANUARY, 1993

RHM&G Job No. 93080
DKB Job No. 5488

SHEET: A-2 OF:

Old Bruning, Inc. 60074 Form 9931

AS-BUILT INFORMATION HAS BEEN PROVIDED BY OTHERS. REZEK, HENRY, MEISENHEIMER, AND GENDE, INC. ASSUMES NO LIABILITY FOR THE ACCURACY OF THE AS-BUILT INFORMATION SHOWN.

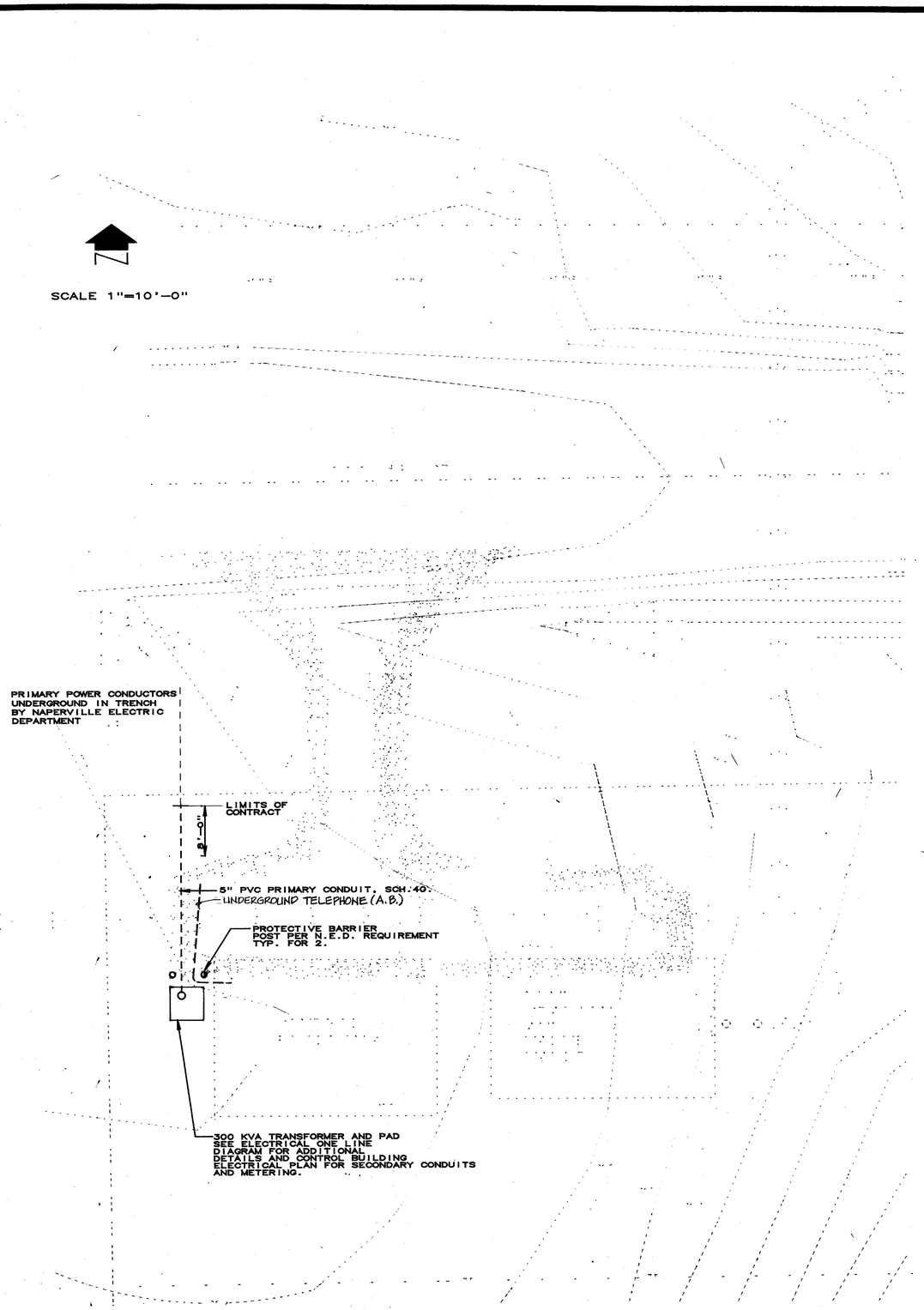

ELECTRICAL SITE PLAN
SCALE: 1" = 10'-0"

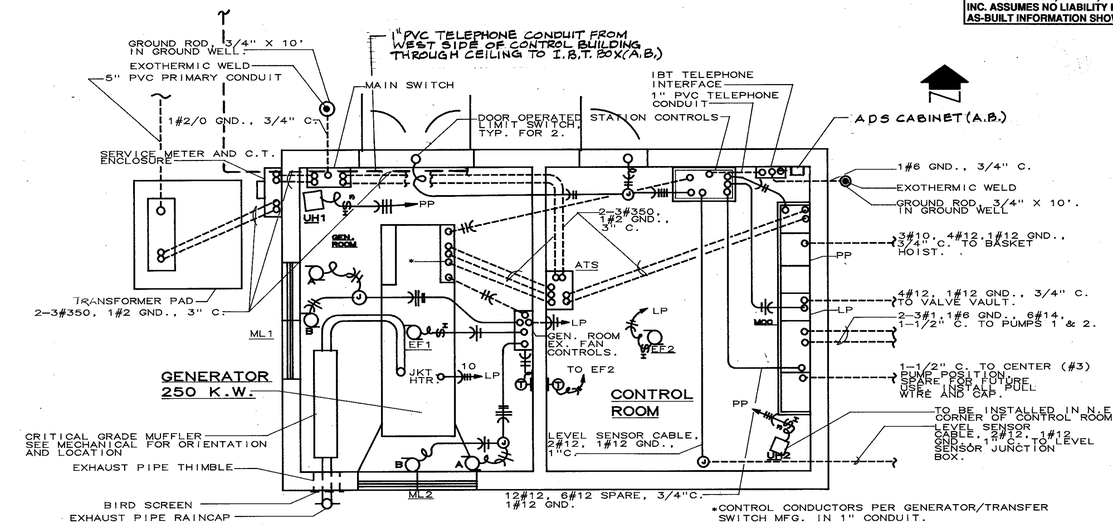

PROVIDE CONDUIT AND WIRE NOT SHOWN TO INTERCONNECT THE OPERATION OF EF-1 AND EF-2 WITH THE MOTORIZED EXHAUST LOUVER LOCATED IN THE ATTIC NOT SHOWN. AND TO CONNECT EF-2 WITH INTAKE LOUVER NOT SHOWN. SEE A-1

POWER PLAN
PUMP STATION CONTROL BUILDING
SCALE: 1/4" = 1'-0"

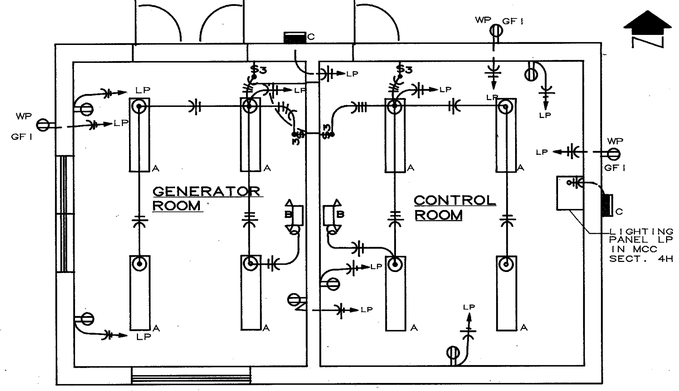

LIGHTING AND RECEPTACLE PLAN
PUMP STATION CONTROL BUILDING
SCALE: 1/4" = 1'-0"

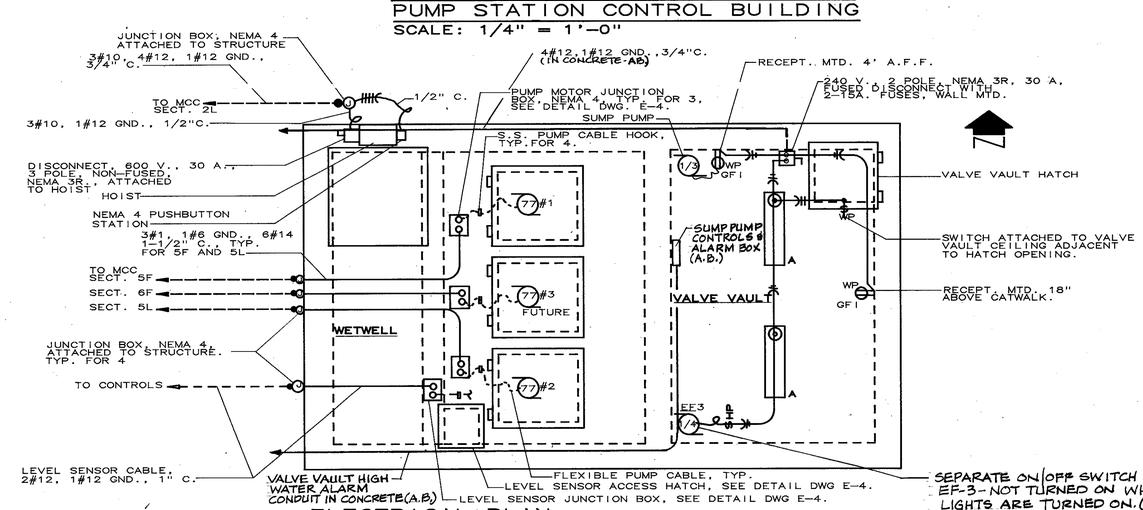

ELECTRICAL PLAN
PUMP STATION WETWELL/ VALVE VAULT
SCALE: 1/4" = 1'-0"

AS-BUILT ELECTRICAL PLANS

AS-BUILT INFORMATION HAS BEEN PROVIDED BY OTHERS. REZEK, HENRY, MEISENHEIMER, AND GENDE, INC. ASSUMES NO LIABILITY FOR THE ACCURACY OF THE AS-BUILT INFORMATION SHOWN.

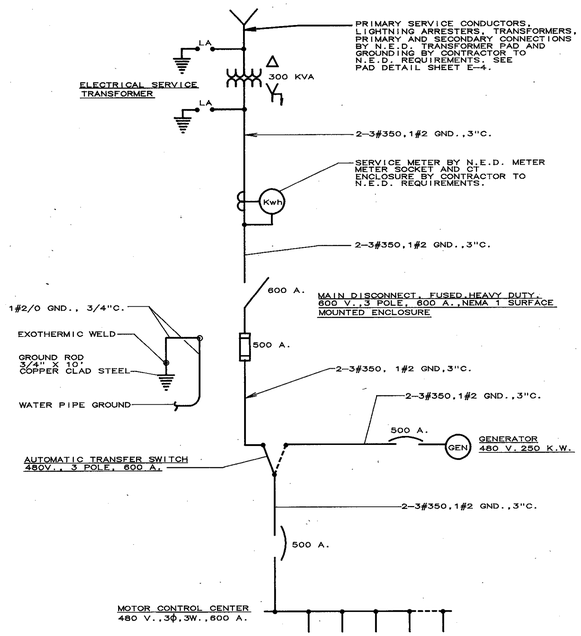

ELECTRICAL DISTRIBUTION SYSTEM ONE LINE DIAGRAM

NTS

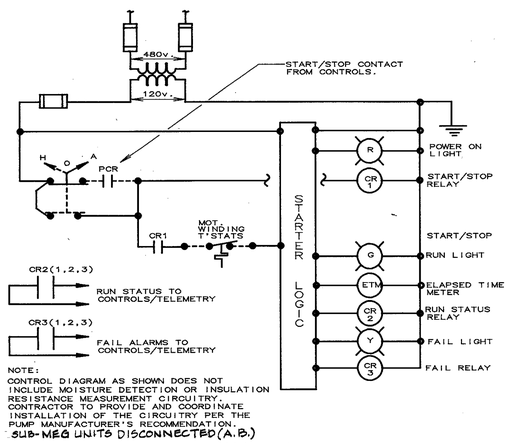

NOTE:
CONTROL DIAGRAM AS SHOWN DOES NOT INCLUDE MOISTURE DETECTION OR INSULATION RESISTANCE MEASUREMENT CIRCUITRY. CONTRACTOR TO PROVIDE AND COORDINATE INSTALLATION OF THE CIRCUITRY PER THE PUMP MANUFACTURER'S RECOMMENDATION.
SUB-MEG UNITS DISCONNECTED (A.B.)

CONTROL DIAGRAM, TYP. RAW SEWAGE PUMP SOLID STATE REDUCED VOLTAGE STARTERS SOUTHWEST PUMP STATION

NTS

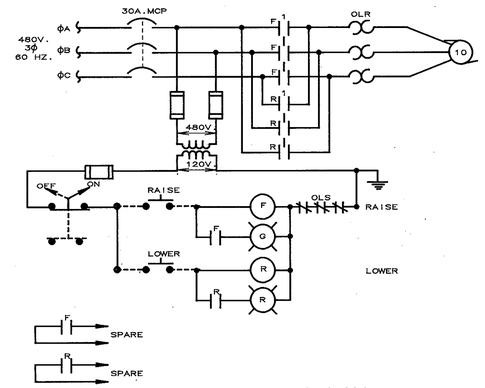

CONTROL DIAGRAM BASKET HOIST

NTS

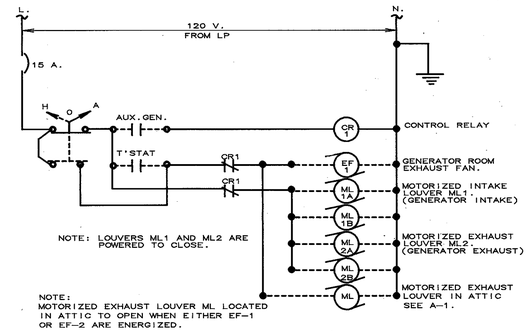

NOTE: LOUVERS ML1 AND ML2 ARE POWERED TO CLOSE.

NOTE:
MOTORIZED EXHAUST LOUVER ML LOCATED IN ATTIC TO OPEN WHEN EITHER EF-1 OR EF-2 ARE ENERGIZED.

CONTROL DIAGRAM GENERATOR ROOM HVAC CONTROLS

NTS

NOTE: (A.B.)
THIS CIRCUIT WAS WIRED SO THAT THE LOUVERS IN THE GENERATOR ROOM WILL OPEN MANUALLY AS WELL AS AUTOMATICALLY.

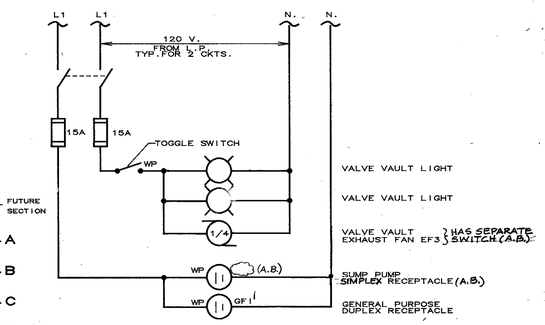

ELECTRICAL CONTROL DIAGRAM VALVE VAULT SOUTHWEST PUMP STATION

NTS

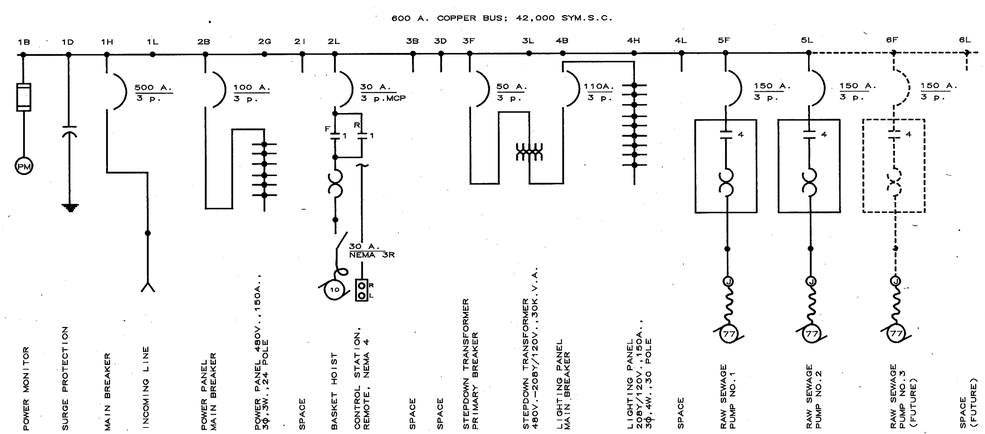

MOTOR CONTROL CENTER ONE-LINE DIAGRAM

NTS

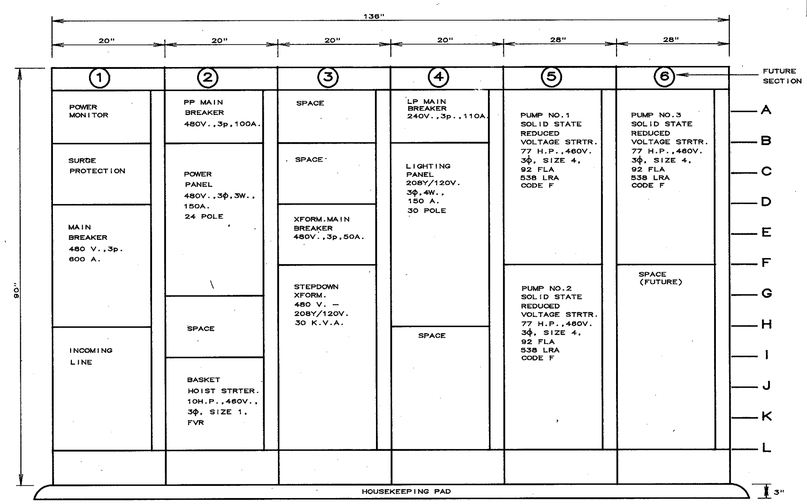

MOTOR CONTROL CENTER ELEVATION

NTS

AS-BUILT
ONE LINE DIAGRAMS, MOTOR CONTROL CENTER, CONTROL DIAGRAMS

AS-BUILT INFORMATION HAS BEEN PROVIDED BY OTHERS. REZEK, HENRY, MEISENHEIMER, AND GENDE, INC. ASSUMES NO LIABILITY FOR THE ACCURACY OF THE AS-BUILT INFORMATION SHOWN.

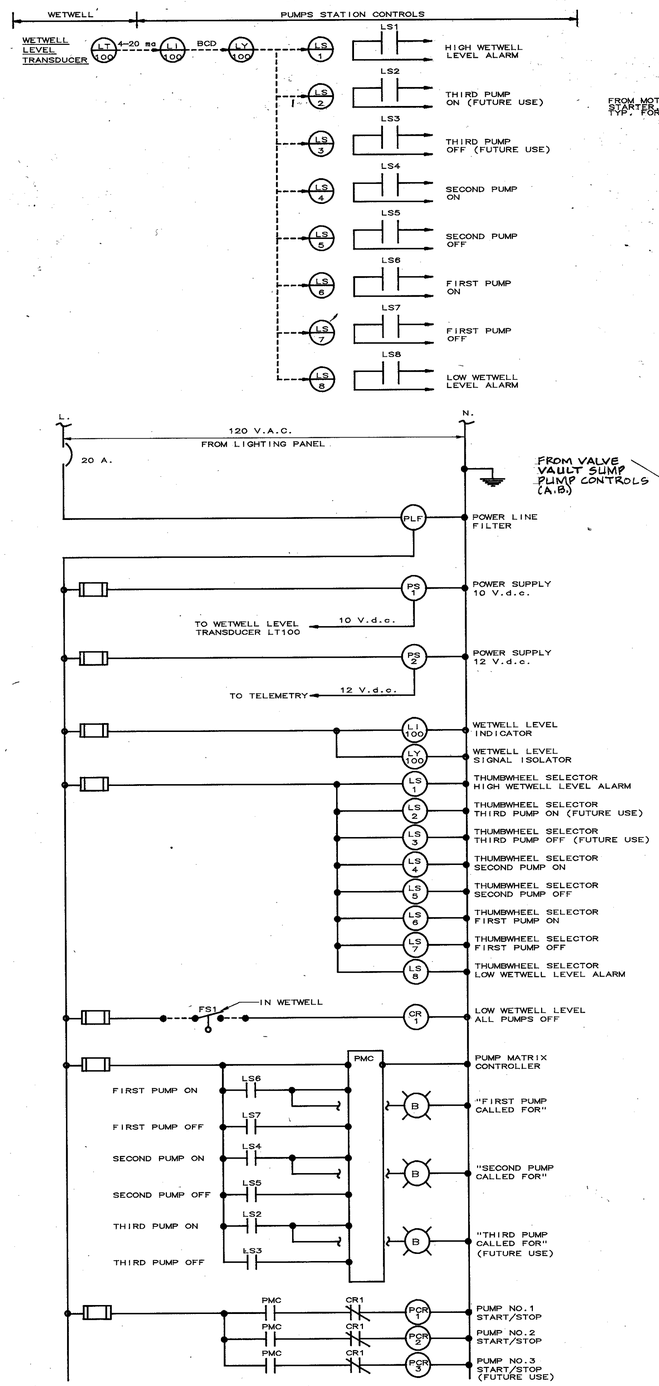

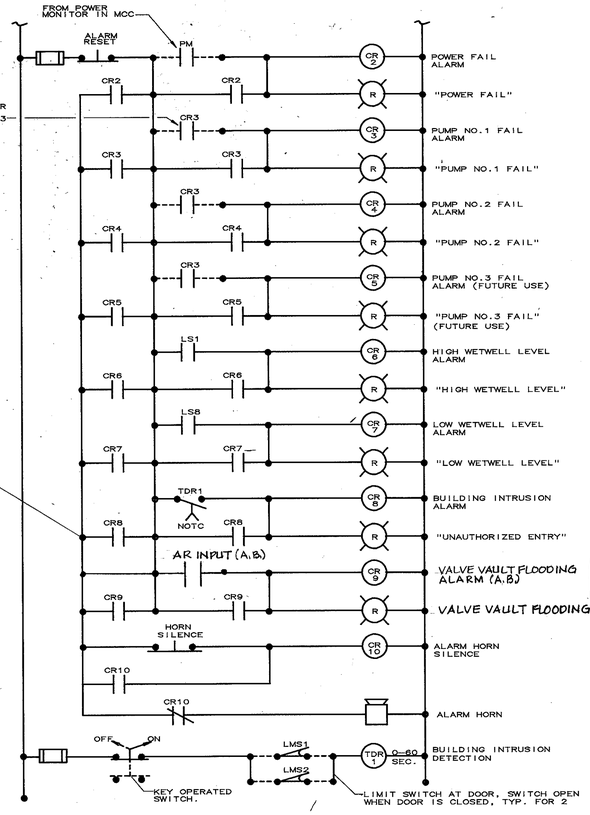

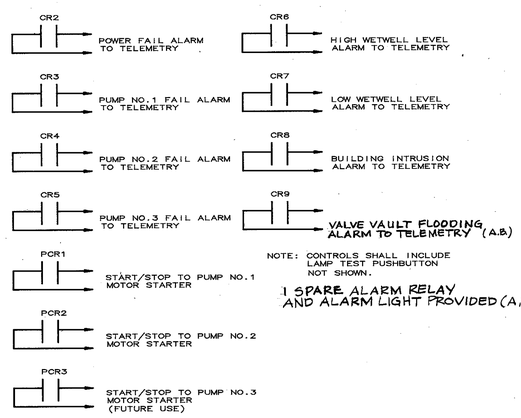

NOTE: CONTROLS SHALL INCLUDE LAMP TEST PUSHBUTTON NOT SHOWN.

1 SPARE ALARM RELAY AND ALARM LIGHT PROVIDED (A.B.)

CONTROL/INSTRUMENTATION DIAGRAM
SOUTHWEST PUMP STATION CONTROLS
NTS

COMBINED INTO 1 - "PUMP FAIL" ALARM @ SPRING BROOK PLANT (A.B.)

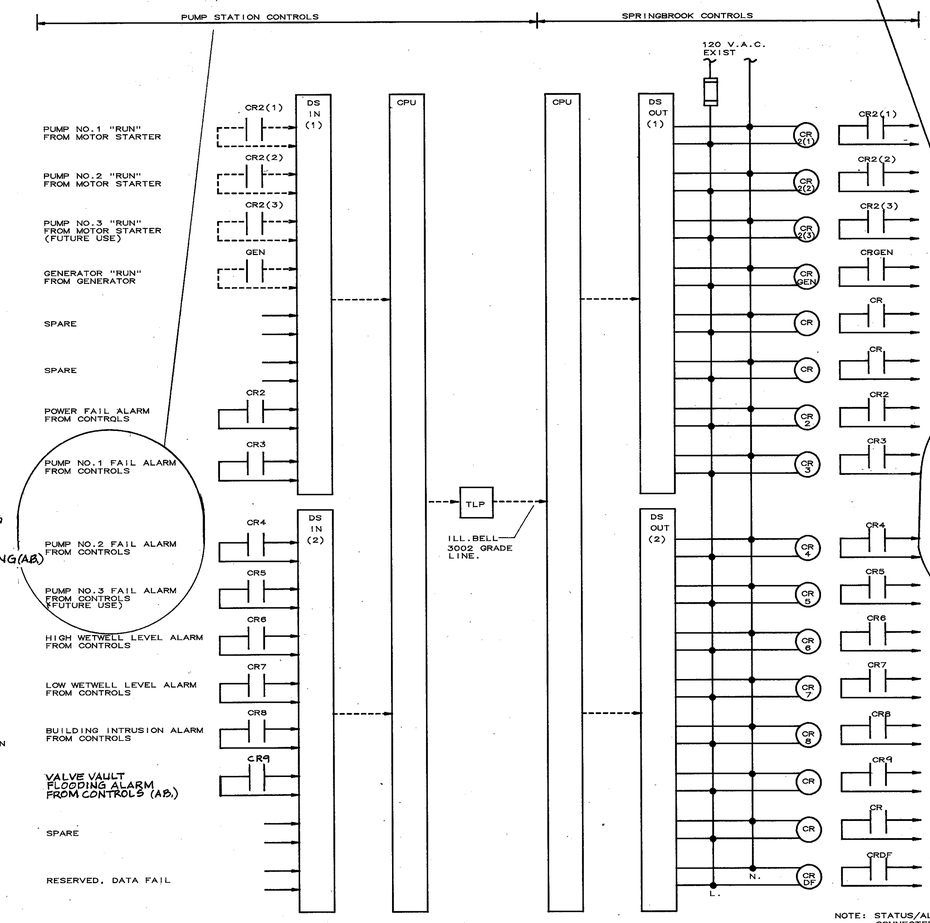

TELEMETRY DIAGRAM
SOUTHWEST PUMP STATION CONTROLS
NTS

NOTE: SPACE SHALL BE PROVIDED IN THE CONTROL ENCLOSURE FOR THE FUTURE ADDITION OF 1 EACH ANALOG INPUT, ANALOG OUTPUT, AND DISCRETE OUTPUT CARDS.

TELEMETRY DIAGRAM
SPRINGBROOK CONTROLS
NTS

NOTE: STATUS/ALARM OUTPUTS TO BE CONNECTED TO EXIST. ANNUNCIATORS AT THE OWNERS DIRECTION.

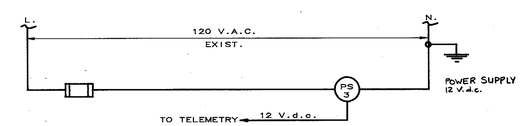

CONTROL DIAGRAM
SPRINGBROOK CONTROLS
NTS

AS-BUILT
CONTROL, INSTRUMENTATION AND TELEMETRY DIAGRAMS

AS-BUILT INFORMATION HAS BEEN PROVIDED BY OTHERS. REZEK, HENRY, MEISENHEIMER, AND GENDE, INC. ASSUMES NO LIABILITY FOR THE ACCURACY OF THE AS-BUILT INFORMATION SHOWN.

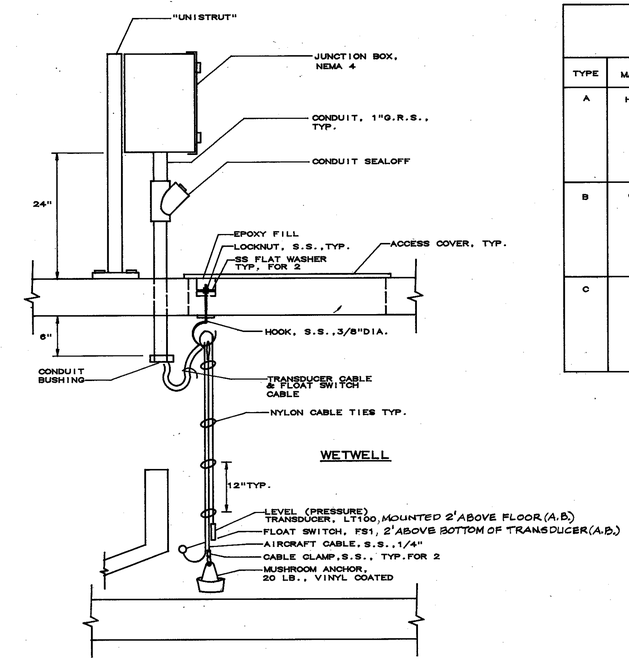

INSTALLATION DETAIL
WETWELL LEVEL TRANSDUCER
NTS

LIGHTING FIXTURE SCHEDULE

TYPE	MANUFACTURER	MODEL	CATALOG NO.	DESCRIPTION
A	HUBBELL	DMT	EDL042R-SPDR-E1 (AB)	INTERIOR FLUORESCENT FIXTURE, 4 FT., SURFACE MOUNTED, WITH ACRYLIC LENS, 2-F40 3150 LUMEN LAMPS, CBM CERTIFIED ENERGY SAVING "P" BALLAST, LINE FUSING, MOUNTING HARDWARE, 120 V. U.L. LISTED FOR DAMP LOCATIONS.
B	CHLORIDE	CMF	CMF25-ACF (120)	EMERGENCY LIGHT FIXTURE, WALL MOUNTED, WITH 2-12 WATT HALOGEN LAMPS, SEALED LEAD CALCIUM BATTERY, INTEGRAL SOLID STATE BATTERY CHARGER, PUSH TO TEST SWITCH, LED CHARGE RATE PILOT LIGHT, LINE FUSING, MOUNTING HARDWARE, 120 VOLT, U.L. LISTED.
C	CROUSE-HINDS	CTL	CTL50SR-254LS HPCT-50-120V-LL (AB)	EXTERIOR LIGHT FIXTURE, WALL MOUNTED, WITH 1-50 WATT H.P.S. LAMP, CBM CERTIFIED BALLAST, LINE FUSING, INTEGRAL PHOTOCELL, POLYCARBONATE LENS AND HOUSING, MOUNTING HARDWARE, 120 VOLT, U.L. LISTED.

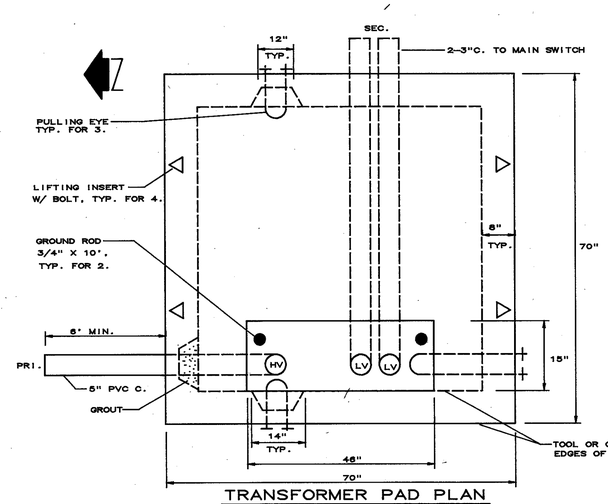

TRANSFORMER PAD PLAN
NTS

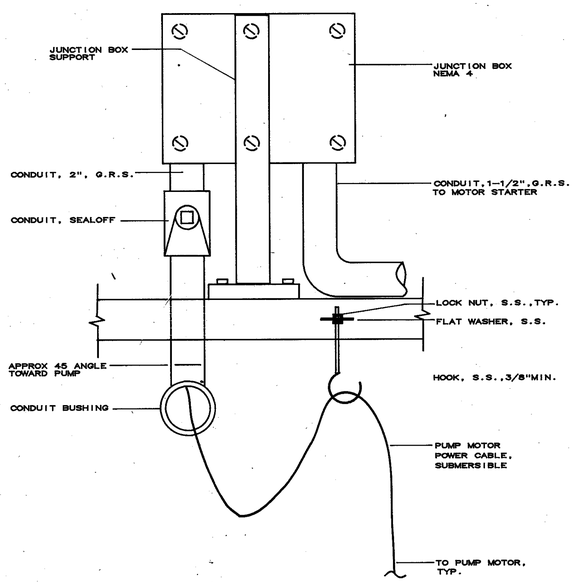

INSTALLATION DETAIL
PUMP MOTOR JUNCTION BOX
NTS

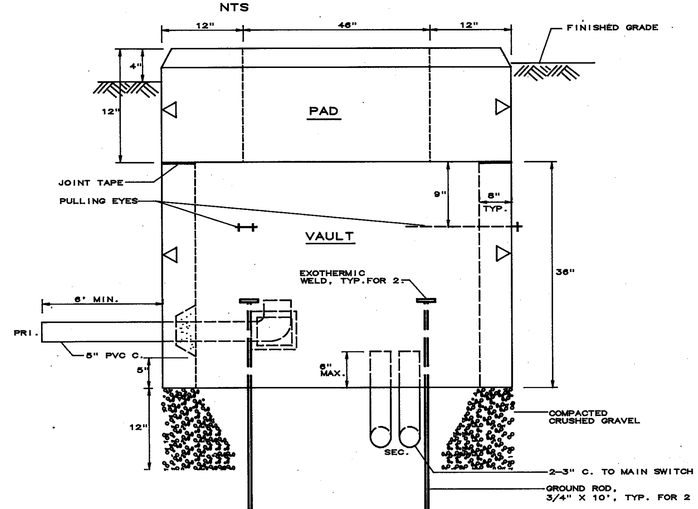

TRANSFORMER PAD ELEVATION
NTS

PANEL PP

SERVICE: 3 ϕ, 4 W.
VOLTAGE: 480 Y/277
MOUNTING: MCC

MAIN BUS: 150 A.
MAINS:
LOCATION: MCC

CKT. BKR. TRIP	CKT. BKR. POLES	CKT. NO.	BRANCH CIRCUT LOAD SERVED	LOAD (KVA)	PHASE LOAD ϕ A (KVA)	ϕ B (KVA)	ϕ C (KVA)	BRANCH CIRCUT LOAD (KVA)	BRANCH CIRCUT LOAD SERVED	CKT. NO.	CKT. BKR. POLES	CKT. BKR. TRIP
15 A.	3	1	UH1, 7.5 K.W.	2.500	4.167			1.667	UH2, 5.0 K.W.	2	3	10 A.
		3		2.500		4.167		1.667		4		
		5		2.500			4.167	1.667		6		
15 A.	3	7	SPARE						SPARE	8	3	20 A.
		9								10		
		11								12		
		13	SPACE						SPACE	14		
		15								16		
		17								18		
		19								20		
		21								22		
		23								24		
		25								26		
		27								28		
		29								30		
		31								32		
		33								34		
		35								36		
		37								38		
		39								40		
		41								42		
			ϕ TOTAL		4.167	4.167	4.167					

FED FROM: 100 A C.B.
FEEDER SIZE: #1/0 MIN.

TOTAL CONNECTED LOAD: 12.501 KVA = 15.04 AMPS
TOTAL DEMAND LOAD: 12.501 KVA = 15.04 AMPS

PANEL LP

SERVICE: 3 ϕ, 4 W.
VOLTAGE: 208Y/120
MOUNTING: MCC

MAIN BUS: 150 A.
MAINS:
LOCATION: MCC

CKT. BKR. TRIP	CKT. BKR. POLES	CKT. NO.	BRANCH CIRCUT LOAD SERVED	LOAD (KVA)	PHASE LOAD ϕ A (KVA)	ϕ B (KVA)	ϕ C (KVA)	BRANCH CIRCUT LOAD (KVA)	BRANCH CIRCUT LOAD SERVED	CKT. NO.	CKT. BKR. POLES	CKT. BKR. TRIP
20 A.	1	1	CONTROL RM LTS.	0.384	0.924			0.540	CONTROL RM. RECEPT.	2	1	20 A.
20 A.	1	3	GENERATOR RM LTS.	0.384		0.924		0.540	GENERATOR RM. RECEPT.	4	1	20 A.
20 A.	1	5	OUTDOOR LTS.	0.288			0.828	0.540	OUTDOOR RECEPT.	6	1	20 A.
20 A.	1	7	VALVE VAULT LTS. & EF3	0.888	1.613			0.725	GEN. RM. EF1 & CONTROLS	8	1	20 A.
20 A.	1	9	VALVE VAULT SUMP & RECEPT.	1.307		1.572		0.265	CONTROL RM. EF2	10	1	20 A.
20 A.	1	11	STATION CONTROLS	1.920			1.920		SPARE	12	1	20 A.
25 A.	3	13	GENERATOR WATER JACKET HEATER, 6000 W.	2.000	2.000				SPARE	14	1	20 A.
		15		2.000		2.000			SPARE	16	2	20 A.
		17		2.000			2.000			18		
		19	SPACE						SPACE	20		
		21								22		
		23								24		
		25								26		
		27								28		
		29								30		
		31								32		
		33								34		
		35								36		
		37								38		
		39								40		
		41								42		
			ϕ TOTAL		4.537	4.496	4.748					

FED FROM: 30 KVA XFORM./110 A.C.B.
FEEDER SIZE: #1/0 MIN.

TOTAL CONNECTED LOAD: 13.781 KVA = 38.3 AMPS
TOTAL DEMAND LOAD: 12.971 KVA = 36.0 AMPS

AS-BUILT
ELECTRICAL DETAILS AND SCHEDULES