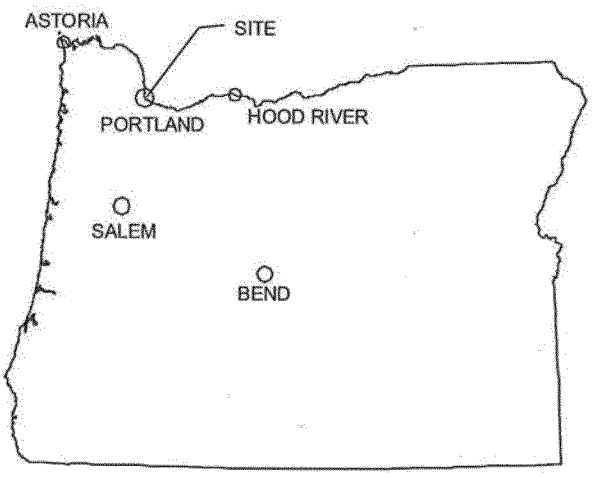


LOCATOR MAP

SHEET INDEX:

1. Cover-Locator
2. Existing Survey
3. Site Photo
4. Tax Map
5. Site Plan Initial Conditions
6. Site Plan Final Conditions
7. Pre-Work Typical Section
8. Post Work Typical Section
9. Typical Details
10. Best Management Practices

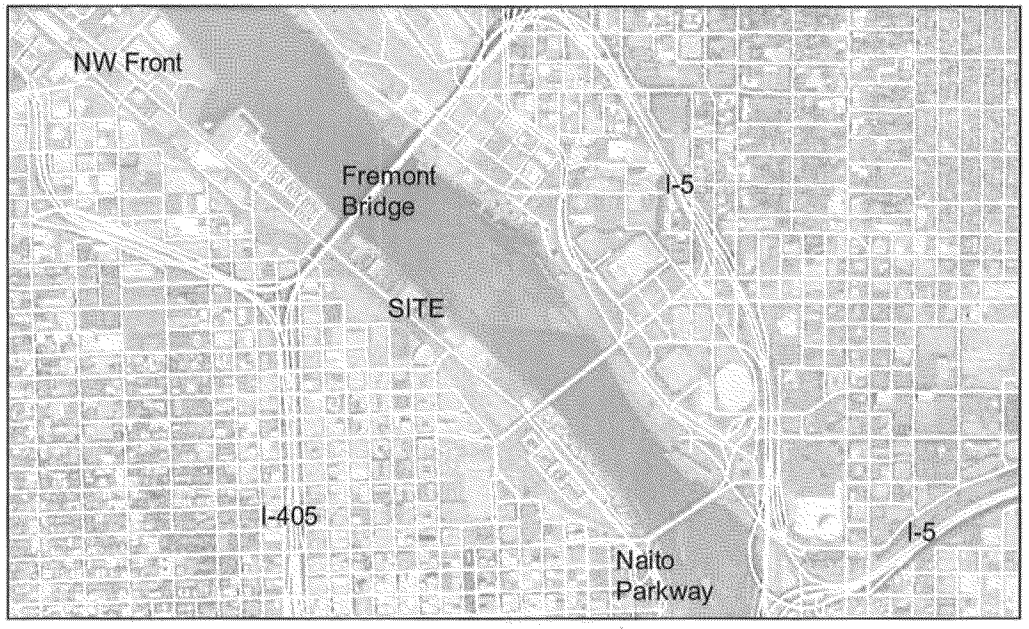


VICINITY MAP

z:\centennialmill4\cad\fs-cm-permit-2016-ph2- final draft.dwg

| | | |
|---|---|---|
| PREPARED BY: Flowing solutions — Flowing Solutions, 3305 SW 87th Avenue, Portland, OR 97225, Phone (503) 297-6331, Fax (503) 297-6053 | SHEET TITLE: COVER-LOCATOR | DATE: 2/23/2016 |
| | PROJECT: CENTENNIAL MILL DECK REMOVAL, 1362 NW NAITO PARKWAY, PORTLAND, OR 97209 | SCALE: NTS |
| | RIVER/MILE: WILLAMETTE, RM 11.4 — DATUM: COP | SHEET: 1/10 |

PHASE 2 FEBRUARY 23, 2016

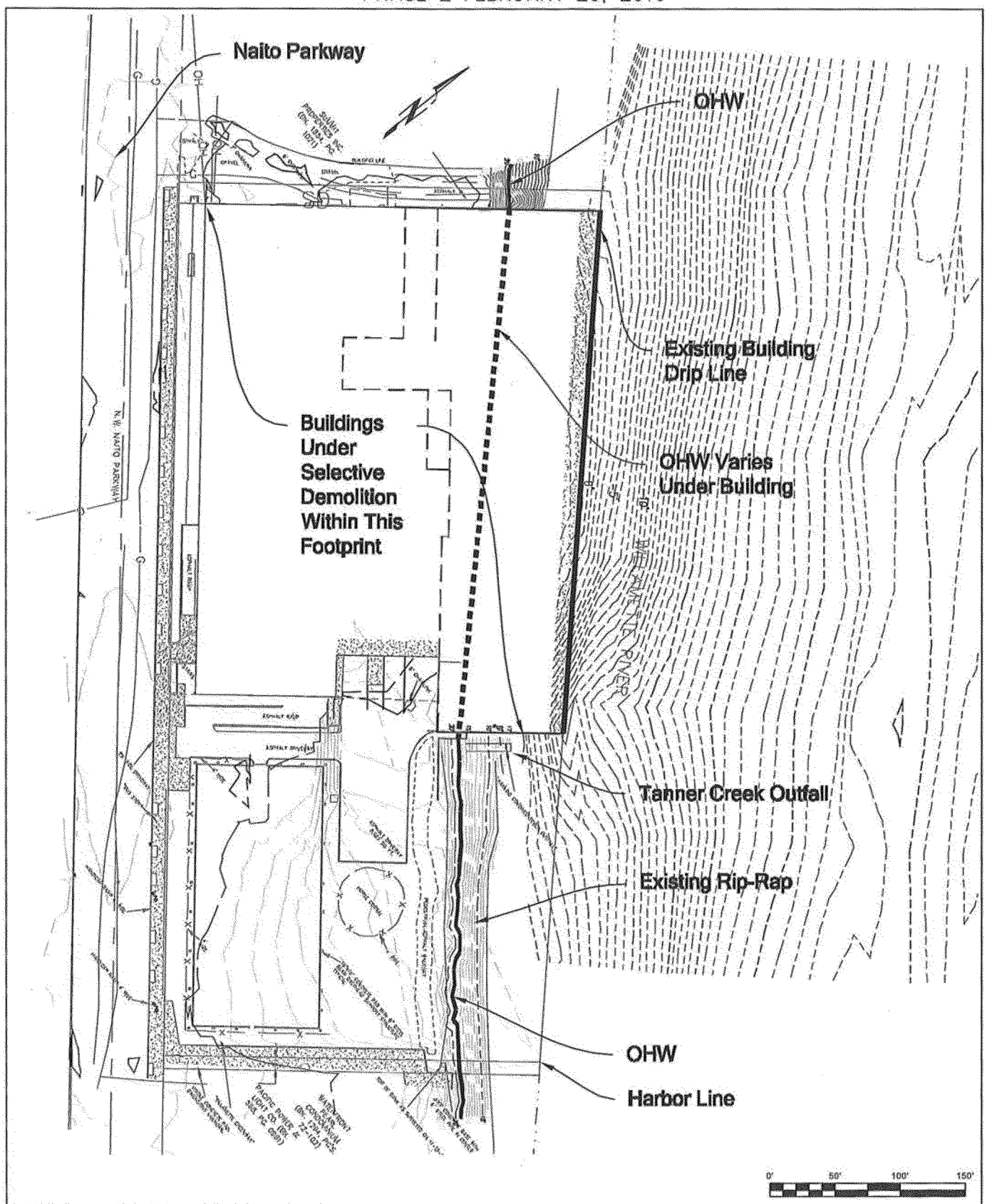


SURVEY – CRANE & MERSETH, OTAK

| PREPARED BY: | SHEET TITLE: EXISTING SURVEY | | DATE: 2/23/2016 |
|---|---|---|---|
| Flowing solutions<br>Flowing Solutions<br>3305 SW 87th Avenue<br>Portland, OR 97225<br>Phone (503) 297-6331<br>Fax (503) 297-6053 | PROJECT: CENTENNIAL MILL DECK REMOVAL<br>1362 NW NAITO PARKWAY<br>PORTLAND, OR 97209 | | SCALE: 1"=60' |
| | RIVER/MILE: WILLAMETTE, RM 11.4 | DATUM: COP | SHEET: 2/10 |

Z:\centennialmill4\cad\fs-cm-permit-2016-ph2- final draft.dwg

PHASE 2 FEBRUARY 23, 2016

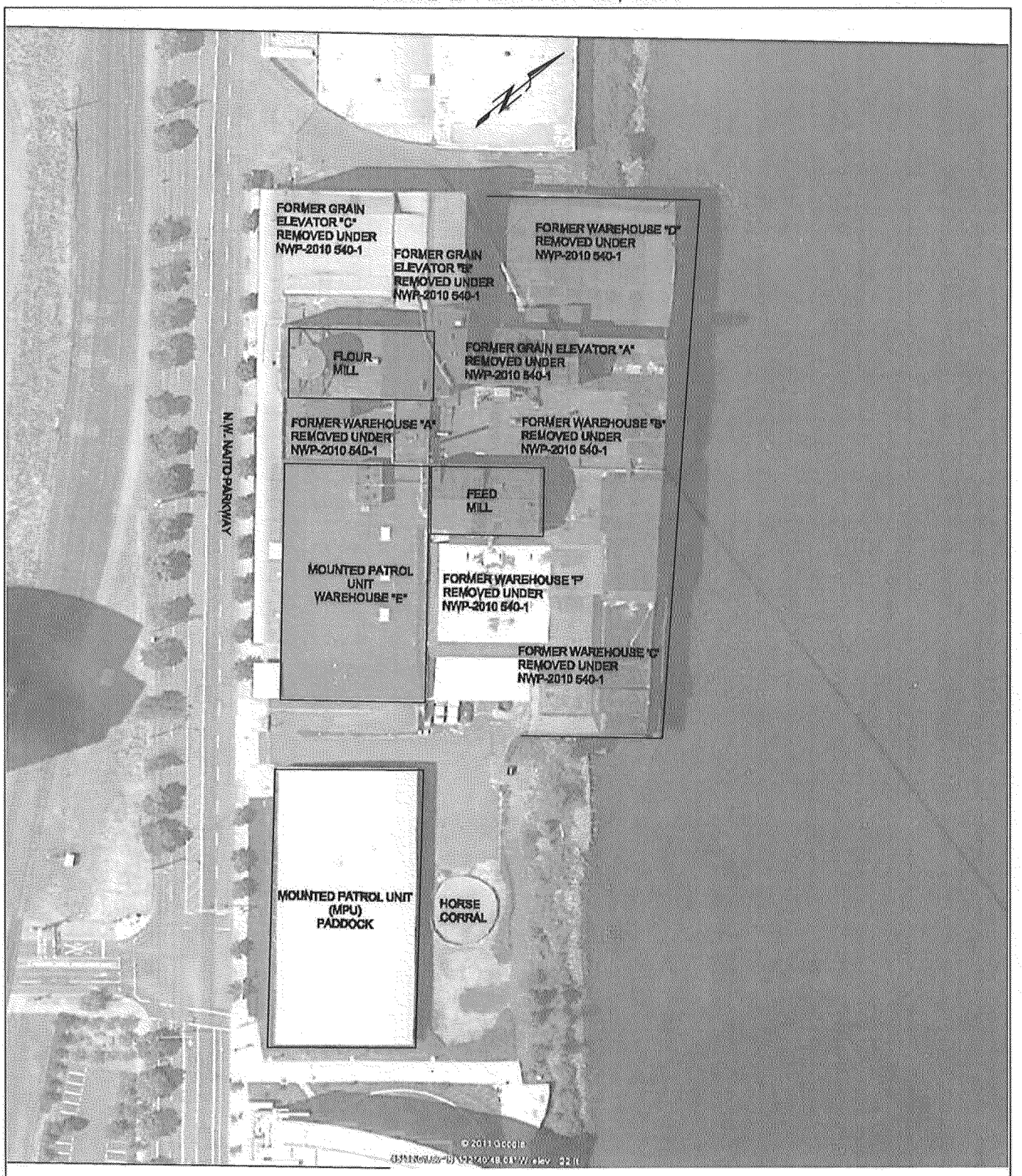


0' 50' 100' 150'

AIR PHOTO – GOOGLE NONRECTIFIED

| | | |
|---|---|---|
| PREPARED BY: Flowing solutions<br>Flowing Solutions<br>3305 SW 87th Avenue<br>Portland, OR 97225<br>Phone (503) 297-6351<br>Fax (503) 297-6053 | SHEET TITLE: SITE PHOTO | DATE: 2/23/2016 |
| | PROJECT: CENTENNIAL MILL DECK REMOVAL<br>1362 NW NAITO PARKWAY<br>PORTLAND, OR 97209 | SCALE: 1"=100' |
| | RIVER/MILE: WILLAMETTE, RM 11.4 — DATUM: COP | SHEET: 3/10 |

z:\centennialmill4\cad\fs-cm-permit-2016-ph2- final draft.dwg

PHASE 2 FEBRUARY 23, 2016

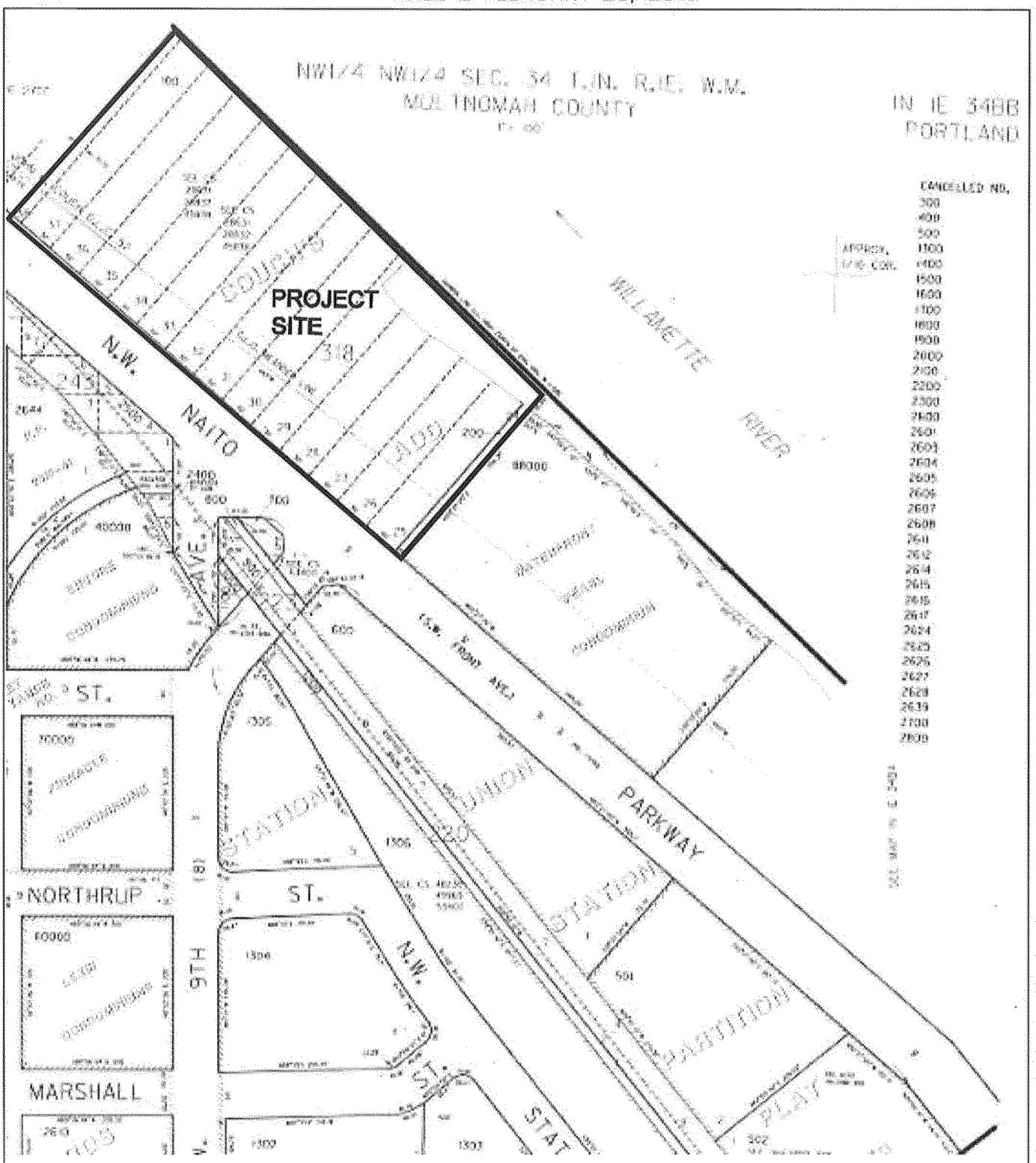


| PREPARED BY: | SHEET TITLE: TAX MAP | | DATE: 2/23/2016 |
|---|---|---|---|
| Flowing solutions<br>Flowing Solutions<br>3305 SW 87th Avenue<br>Portland, OR 97225<br>Phone (503) 297-6331<br>Fax (503) 297-6053 | PROJECT: CENTENNIAL MILL DECK REMOVAL<br>1362 NW NAITO PARKWAY<br>PORTLAND, OR 97209 | | SCALE: NTS |
| | RIVER/MILE: WILLAMETTE, RM 11.4 | DATUM: COP | SHEET: 4/10 |

z:\centennialmill4\cad\fs-cm-permit-2016-ph2- final draft.dwg

PHASE 2 FEBRUARY 23, 2016

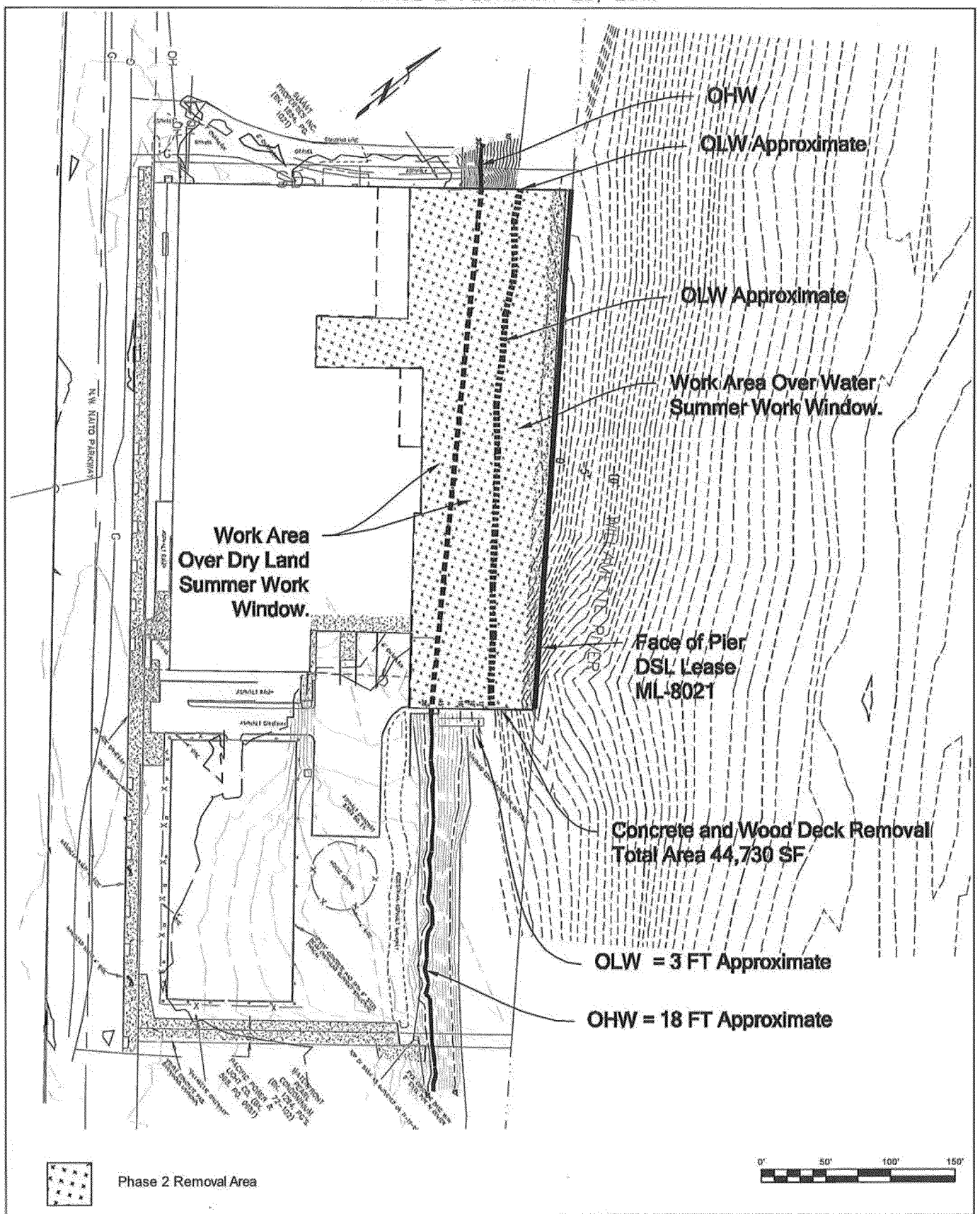


| | | |
|---|---|---|
| PREPARED BY: Flowing solutions — Flowing Solutions, 3305 SW 87th Avenue, Portland, OR 97225, Phone (503) 297-6331, Fax (503) 297-6053 | SHEET TITLE: SITE PLAN INITIAL CONDITIONS | DATE: 2/23/2016 |
| | PROJECT: CENTENNIAL MILL DECK REMOVAL<br>1362 NW NAITO PARKWAY<br>PORTLAND, OR 97209 | SCALE: 1"=100' |
| | RIVER/MILE: WILLAMETTE, RM 11.4 — DATUM: COP | SHEET: 5/10 |

z:\centennialmill4\cad\fs-cm-permit-2016-ph2- final draft.dwg

PHASE 2 FEBRUARY 23, 2016

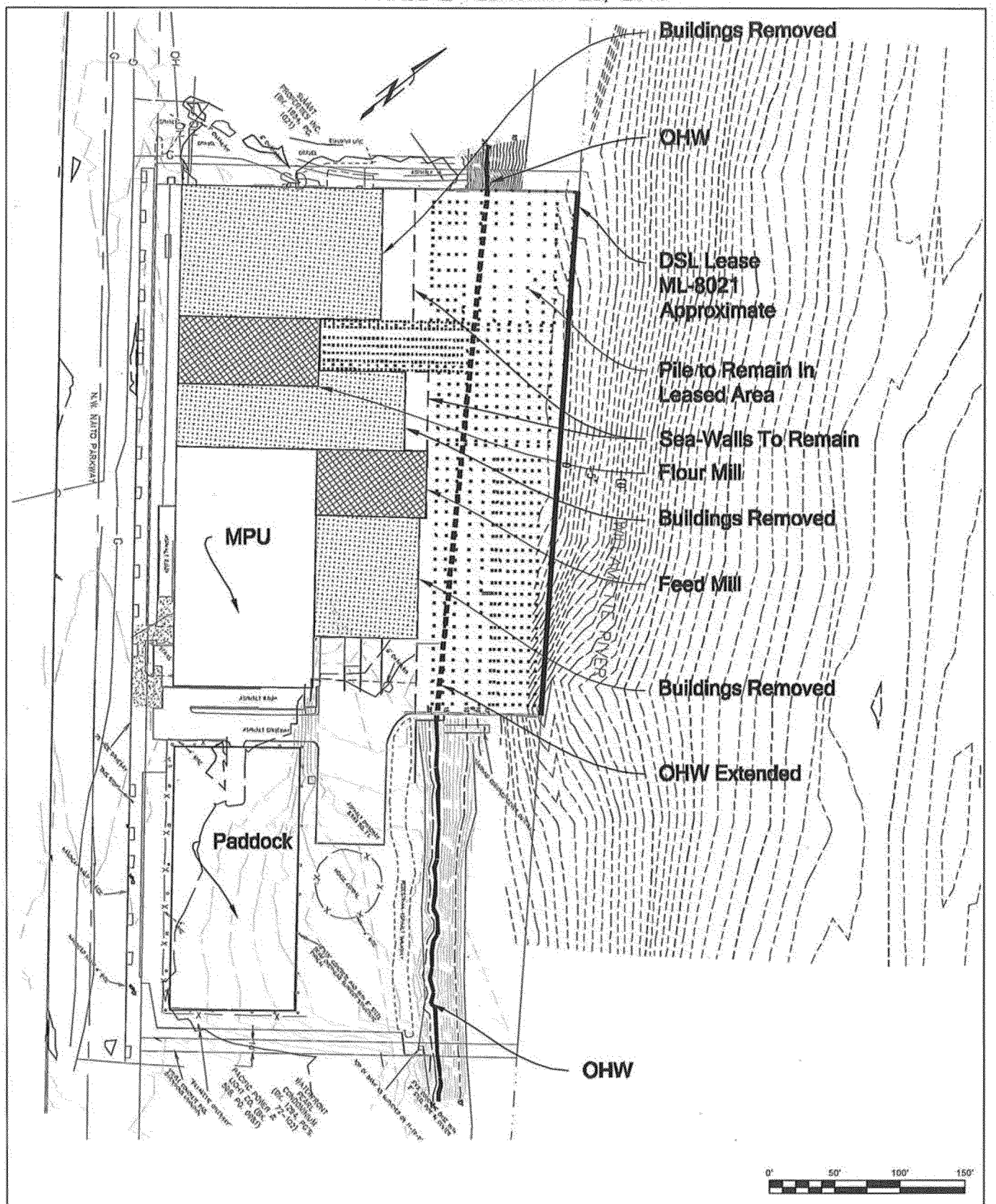


| | | |
|---|---|---|
| PREPARED BY: Flowing solutions<br>Flowing Solutions<br>3305 SW 87th Avenue<br>Portland, OR 97225<br>Phone (503) 297-6331<br>Fax (503) 297-6053 | SHEET TITLE: SITE PLAN FINAL CONDITIONS | DATE: 2/23/2016 |
| | PROJECT: CENTENNIAL MILL DECK REMOVAL<br>1362 NW NAITO PARKWAY<br>PORTLAND, OR 97209 | SCALE: 1"=100' |
| | RIVER/MILE: WILLAMETTE, RM 11.4 — DATUM: COP | SHEET: 6/10 |

z:\centennialmill4\cad\fs-cm-permit-2016-ph2- final draft.dwg

PHASE 2 FEBRUARY 23, 2016

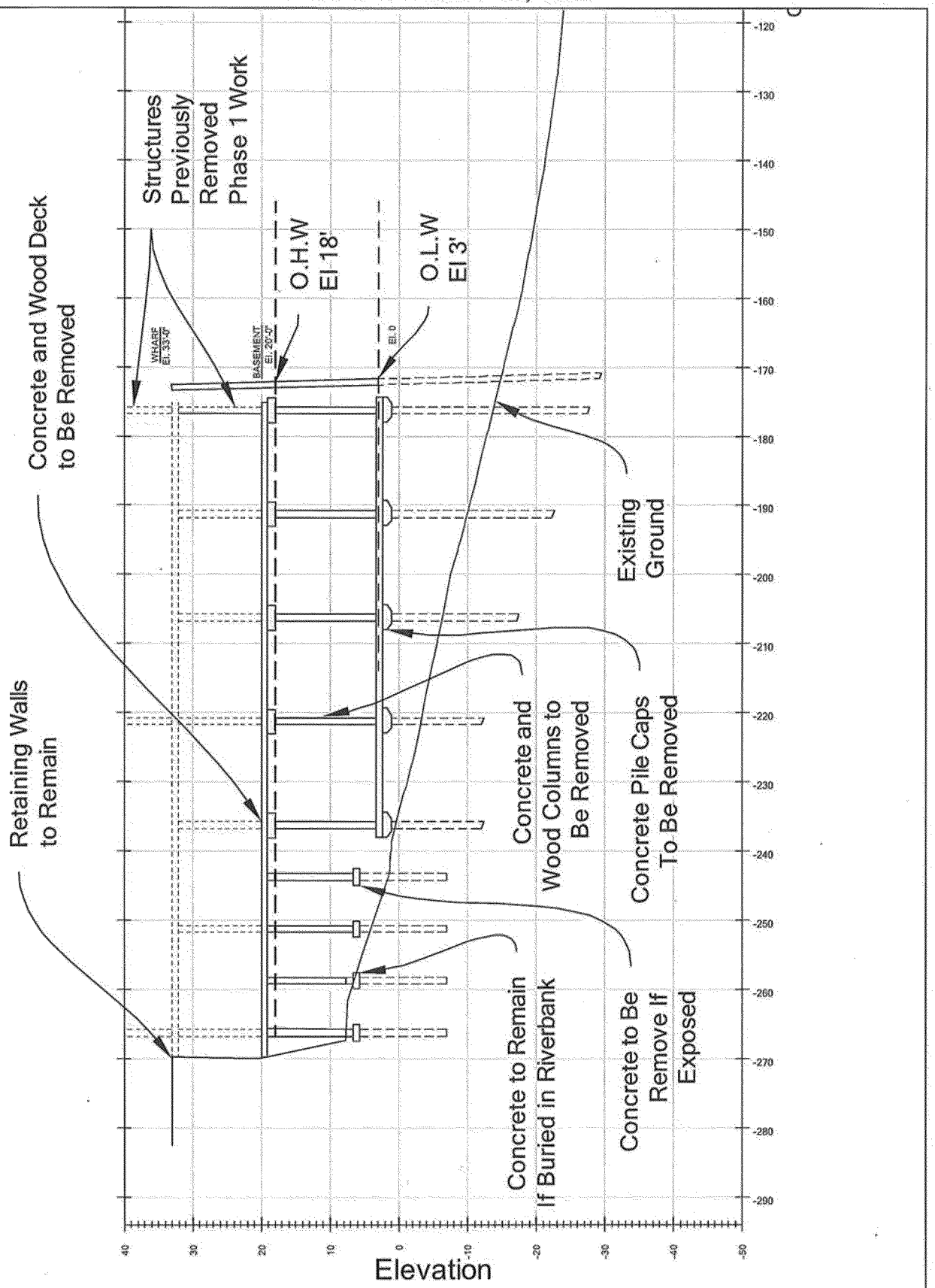


| | | |
|---|---|---|
| PREPARED BY: Flowing solutions — Flowing Solutions, 3305 SW 87th Avenue, Portland, OR 97225, Phone (503) 297-6351, Fax (503) 297-6053 | SHEET TITLE: PREWORK TYPICAL SECTION | DATE: 2/23/2016 |
| | PROJECT: CENTENNIAL MILL DECK REMOVAL, 1362 NW NAITO PARKWAY, PORTLAND, OR 97209 | SCALE: 1"=20' |
| | RIVER/MILE: WILLAMETTE, RM 11.4 — DATUM: COP | SHEET: 7/10 |

z:\centennialmill4\cad\fs-cm-permit-2016-ph2- final draft.dwg

PHASE 2 FEBRUARY 23, 2016

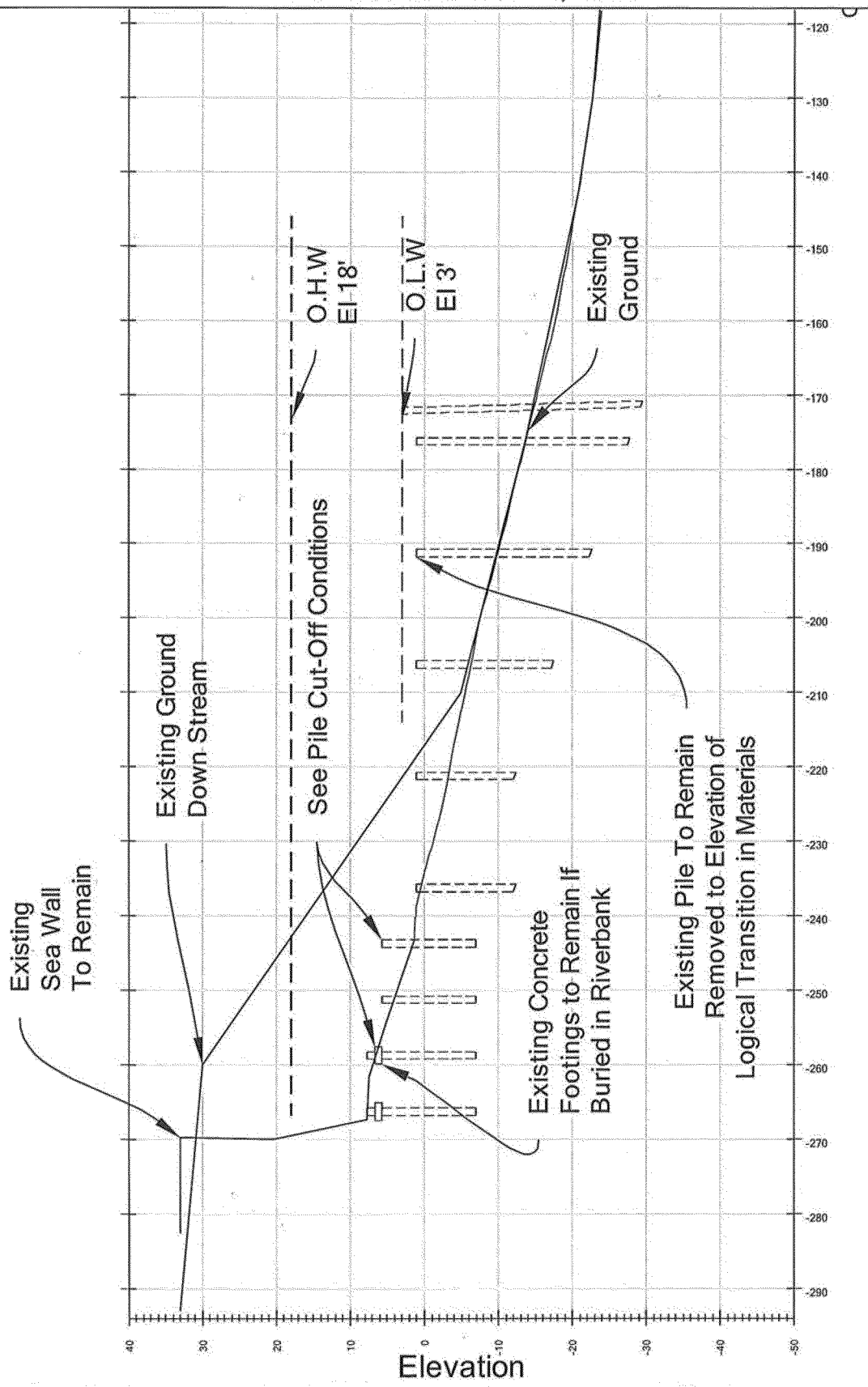


| | | |
|---|---|---|
| PREPARED BY: Flowing solutions — Flowing Solutions, 3305 SW 87th Avenue, Portland, OR 97225, Phone (503) 297-6331, Fax (503) 297-6053 | SHEET TITLE: POST WORK TYPICAL SECTION | DATE: 2/23/2016 |
| | PROJECT: CENTENNIAL MILL DECK REMOVAL, 1362 NW NAITO PARKWAY, PORTLAND, OR 97209 | SCALE: 1"=20' |
| | RIVER/MILE: WILLAMETTE, RM 11.4 — DATUM: COP | SHEET: 8/10 |

z:\centennialmill4\cad\fs-cm-permit-2016-ph2- final draft.dwg

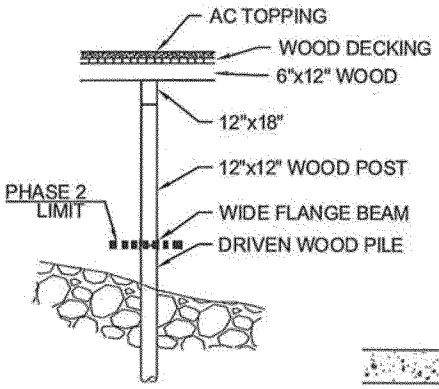


TYPE A

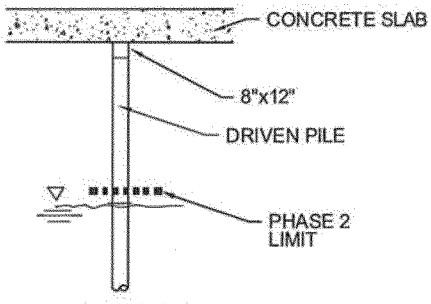


TYPE A2

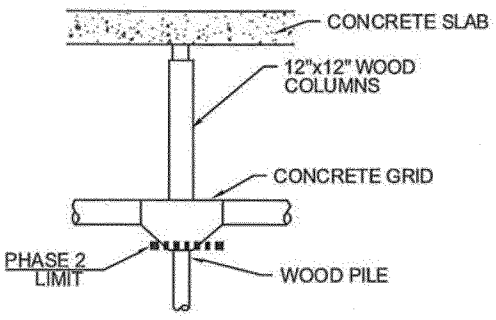


TYPE A1

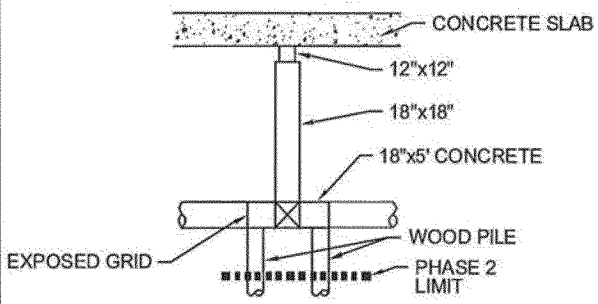


DETAIL B - EXPOSED

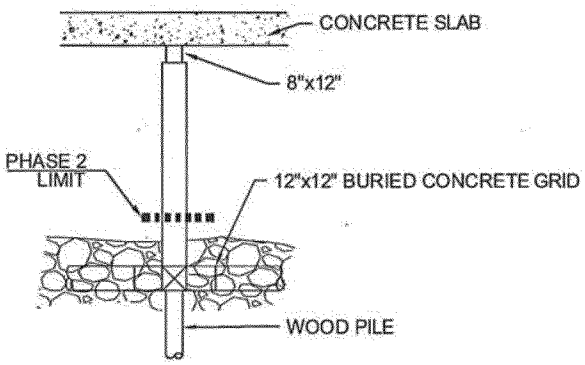


TYPE B - BURIED

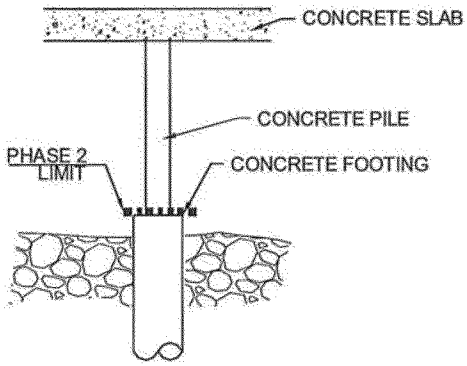


TYPE C

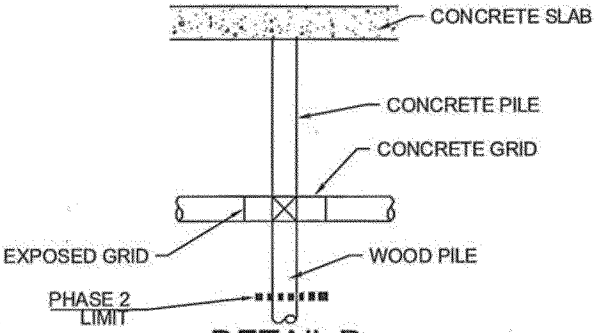


DETAIL D

| | | |
|---|---|---|
| PREPARED BY: Flowing solutions — Flowing Solutions, 3305 SW 87th Avenue, Portland, OR 97225, Phone (503) 297-0331, Fax (503) 297-6053 | SHEET TITLE: TYPICAL DETAILS | DATE: 2/23/2016 |
| | PROJECT: CENTENNIAL MILL DECK REMOVAL, 1362 NW NAITO PARKWAY, PORTLAND, OR 97209 | SCALE: 1"=20' |
| | RIVER/MILE: WILLAMETTE, RM 11.4 — DATUM: COP | SHEET: 9/10 |

z:\centennialmill4\cad\fs-cm-permit-2016-ph2- final draft.dwg

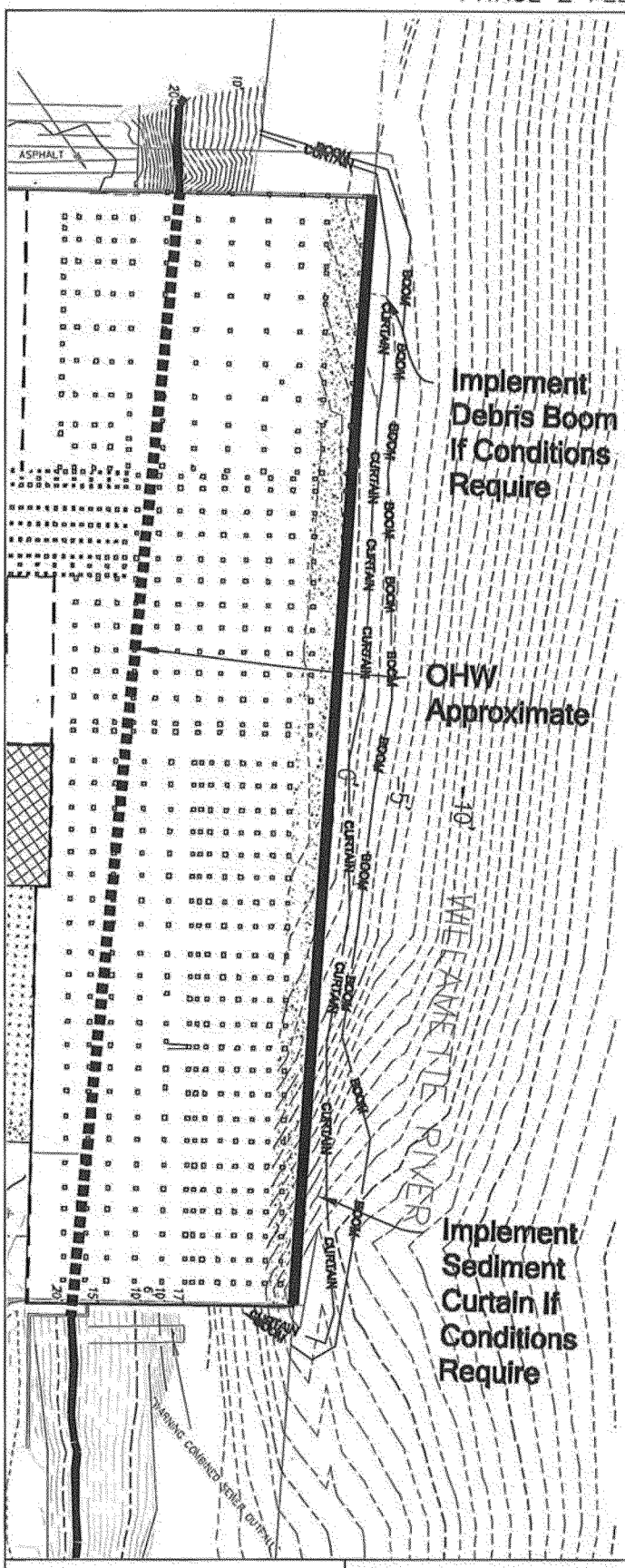


All work will be accomplished from land using land based machinery. Track excavators with shears and picks will dismantle the buildings and Columns

Best Management Practices (BMP's) will be implemented and work stopped and additional BMP's implemented if evidence of impacts to the river occur.

BMP's include:

1. Observe the river twice a day downstream of the work area, mid shift in morning, and mid shift in afternoon and log results on standardized sediment monitoring log, to be kept on site for City inspection. Observations shall note if visible floating discharge and/or debris and/or visible turbidity is leaving the site.
2. If discharge is observed from site, work shall be suspended and cause investigated. If discharge is not determined to be sourced form the site, work may be restarted. If cause of discharge can be isolated and remedied, work may be re-stared with City approval.
3. Spill response kit onsite, sufficiently equipped to address waterbody oil release.

The following BMP's will also be implemented in progressing order, as required:

4. Apply misted water to control airborne dust,
5. Adjust water dust control volume if visible turbidly enters water. Implement standard stormwater BMP control measures as required by approved city erosion control plans.
6. Install floating debris boom around work area adjacent to existing piling foot print
7. Install floating sediment curtain around work area .
8.

| | | |
|---|---|---|
| PREPARED BY: Flowing solutions — Flowing Solutions, 3305 SW 87th Avenue, Portland, OR 97225, Phone (503) 297-6331, Fax (503) 297-6053 | SHEET TITLE: BEST MANAGEMENT PRACTICES (BMP'S) | DATE: 2/23/2016 |
| | PROJECT: CENTENNIAL MILL DECK REMOVAL, 1362 NW NAITO PARKWAY, PORTLAND, OR 97209 | SCALE: NTS |
| | RIVER/MILE: WILLAMETTE, RM 11.4 — DATUM: COP | SHEET: 10/10 |

z:\centennialmill4\cad\fs-cm-permit-2016-ph2- final draft.dwg