Plant ID: 03831
Plant Name: Keystone Station

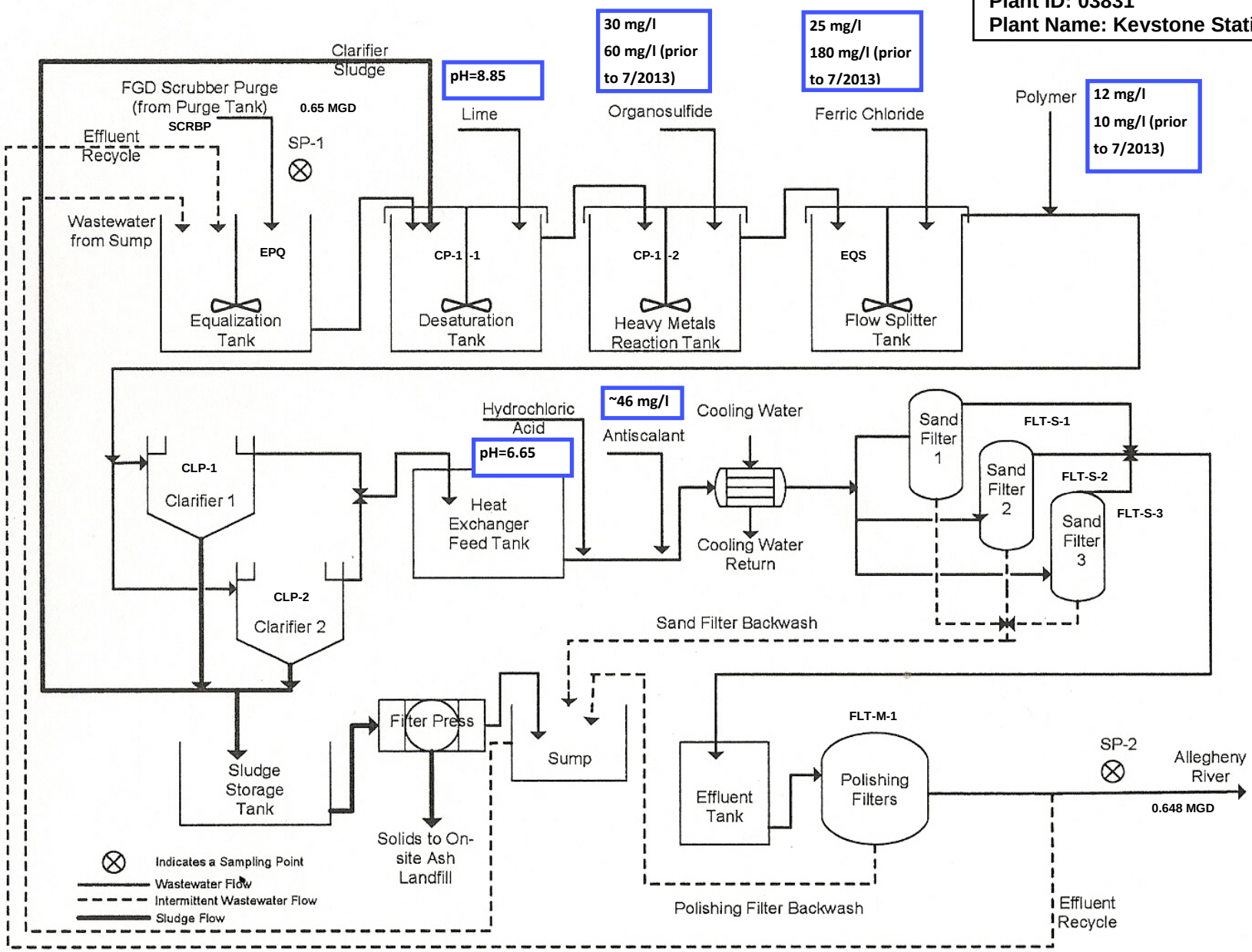

Figure 1. Keystone FGD Wastewater Treatment System Monitoring Program Sampling Points

Flow Block Diagram 2