Safety-Kleen Systems, Inc.

Storage Facility Permit Renewal Application

Safety-Kleen Systems, Inc. Service Cente

Pekin, Illinois

EPA ID# ILD 093862811

STORAGE FACILITY

PERMIT RENEWAL APPLICATION

SAFETY-KLEEN SYSTEMS, INC. SERVICE CENTER

PEKIN, IL

ILD 093862811

DATE REQUIRED: May 2, 2003

safety-kleen ®

HAND DELIVERED

May 1, 2003

Joyce Munie
Illinois Environmental Protection Agency
Division of Land Pollution Control
1021 North Grand Avenue East
Post Office Box 19276
Springfield, Illinois 62794-9276

Re: RCRA Permit Renewal Application for the Safety-Kleen Systems, Inc. Service Center, Pekin, (ILD093862811)

Dear Ms. Munie:

Safety-Kleen Systems, Inc. (S-K) operates a branch service center in Pekin, Illinois (14249 VFW Road) The facility currently operates as a hazardous waste storage facility. The existing facility permit expires on November 2, 2003.

Enclosed with this letter are an original and three copies of the RCRA Permit Renewal Application for storage of hazardous wastes. The permit application was prepared in accordance with applicable Federal and State regulations.

S-K appreciates your assistance with this permit application. If you have any questions regarding this renewal permit application, please contact Mr. Matthew Sauvageau at (847) 468-6701 or myself at (573) 243-1270.

Sincerely,
SAFETY-KLEEN SYSTEMS, INC.

Kevin Farmer

Kevin Farmer
Environmental, Health and Safety Manager
Central Division

044-007

cc: TriHydro Corporation
Regional Administrator, USEPA, Region V (1 copy)

SAFETY-KLEEN
14249 V.F.W. RD. PEKIN, IL 61554 (309) 346-1818 FAX (309) 346-8521

TABLE OF CONTENTS

SECTION	PAGE
FACILITY DESCRIPTION ABSTRACT	**1**
1.0 FACILITY DESCRIPTION	**3**
1.1 Description Of Business Activity	**3**
1.1.1 Parts Cleaner Service	3
1.1.2 Dry Cleaner Service	4
1.1.3 Paint Waste Collection Service	4
1.1.4 Spent Antifreeze Collection	4
1.1.5 Fluid Recovery Service	4
1.2 DESCRIPTION OF THE FACILITY	**5**
1.2.1 Regional Description	6
1.2.2 Waste Management Practices	7
WASTE ANALYSIS PLAN ABSTRACT	**9**
2.0 WASTE ANALYSIS PLAN	**10**
2.1 Introduction	**10**
2.2 Abstract	**10**
2.3 Waste Management/Quality Control Procedures	**11**
2.4 Description Of Wastes	**12**
2.4.1 Used Parts Washer Solvent	12
2.4.2 Wastes Resulting from the Dry Cleaner Service	13
2.4.3 Paint Wastes/Used Lacquer Thinners	14
2.5 Waste Analysis Procedures	**14**
2.6 Qualitative Waste Analysis	**15**
2.6.1 Used Parts Washer Solvent	16
2.6.2 Used Immersion Cleaner	17
2.6.3 Used Dry Cleaning Materials	17
2.6.4 Paint Waste/Used Lacquer Thinner	18
2.7 Quantitative Testing	**20**

2.8 Recharacterization Of Waste Streams **20**

2.9 Waste Analysis Plan Update **20**

2.10 Manifest Review Procedure **21**

2.11 Land Ban Notification/Certification Forms **21**

2.12 Waste Minimization **22**

PREPAREDNESS AND PREVENTION PLAN ABSTRACT **23**

3.0 PREPAREDNESS AND PREVENTION PLAN **24**

3.1 Security Measures **24**

3.2 Inspection Procedures **24**

3.3 Facility Design **26**

3.3.1 Tank Storage 26
3.3.2 Ancillary Equipment 27
3.3.3 Container Storage 27

3.4 Plant Operations- Potential Spill And Fire Sources And Control Procedures **28**

3.4.1 Potential Minor Spill Sources 28
3.4.2 Potential Major Spill Sources 29
3.4.3 Potential Fire Sources 29
3.4.4 Tank Evaluation and Repair Plan 30
3.4.5 External Factors 30

3.5 Internal And External Communications And Alarm System **31**

CONTINGENCY PLAN ABSTRACT **32**

4.0 CONTINGENCY PLAN **33**

4.1 Purpose **33**

4.2 Emergency Coordinator Responsibilities **33**

4.2.1 Responsibilities During An Emergency 33
4.2.2 Remedial Action Responsibilities 34
4.2.3 Reporting Responsibilities 34

4.2.4 Chain Of Command 35
4.2.5 Government Agencies and Local Authorities To Be Notified 36

4.3 Emergency Response Procedures 37

4.3.1 Minor Spills 37
4.3.2 Major Spills 38
4.3.3 Fire Control Procedures 39
4.3.4 Monitoring Requirements 41

4.4 Evacuation Plan 41

4.5 Arrangement With Emergency Response Agencies 41

4.6 Implementation Schedule 42

4.7 Availability And Revision Of The Contingency Plan 42

PERSONNEL TRAINING ABSTRACT 44

5.0 PERSONNEL TRAINING 45

5.1 Outline Of Training Program 45

5.2 Organization Structure And Job Descriptions 45

5.2.1 Branch General Manager 45
5.2.2 Environment, Health and Safety Department 46

5.3 Description Of The Training Program 46

5.3.1 Training of New Branch General Managers 47
5.3.2 Training of New Branch Secretaries 47
5.3.3 Training of New Sales/Service Representatives 47
5.3.4 Training of New Material Handlers 47
5.3.5 Annual Training 48

5.4 Training Records 48

CLOSURE PLAN ABSTRACT 49

6.0 CLOSURE PLAN 50

6.1 Purpose 50

6.2 **Aboveground Storage Tanks And Associated Piping** 50

6.2.1 Removal of Waste Material and Opening The Tank 50
6.2.2 Removal of Residual Waste and Cleaning of the Tank 51
6.2.3 Removal of Tank 52

6.3 **Container Storage Area** 52

6.4 **Solvent Return And Fill Station** 53

6.5 **Flammable Materials Storage Shelter** 53

6.6 **Decontamination Of Cleanup Equipment** 54

6.7 **Closure Criteria** 54

6.8 **Facility Closure Schedule And Certification** 54

6.9 **Post-Closure Plan** 55

6.10 **Notice In Deed And Certification** 55

6.11 **Closure Cost Estimate** 55

6.12 **Financial Assurance Mechanism For Closure** 55

6.13 **Post-Closure Cost Estimate** 55

6.14 **Financial Assurance Mechanism For Post-Closure** 56

6.15 **Liability Requirements** 56

6.15.1 Coverage for Sudden Accidental Occurrences 56
6.15.2 Coverage For Non-sudden Accidental Occurrences 56

7.0 MANAGEMENT OF WASTE IN CONTAINERS 57

7.1 **Description Of Wastes To Be Stored** 57

7.2 **Secondary Containment Structures** 57

7.3 **Prevention Of Runon, Runoff And Accumulation Of Spills** 58

7.4 **Storage Configuration** 58

7.5 **Compatibility Of Wastes And Containers** 58

7.6 **Handling And Management Of Containers** 58

7.7 **Inspections** 59

7.8 **Buffer Zone Requirements** 59

7.9 **Compliance With Land Disposal Restrictions** 59

8.0 MANAGEMENT OF WASTES IN TANKS 60

8.1 **Description Of Tank System** 60

8.2 **Description Of The Containment System** 61

8.3 **Tank Management Practices** 61

8.4 **Standards For Ignitable Wastes** 63

8.5 **Internal Communication** 64

8.6 **Air Emissions For Equipment Leaks** 64

8.7 **Rcra Subpart Cc Organic Air Emission Standards For Tanks And Containers** 64

8.7.1 Container Standards (40 CFR 265.1087) 65
8.7.2 Management Procedures 66

8.8 **Tank Standards (40 Cfr 265.1085)** 67

8.8.1 Service Center Management Procedures 68
8.8.2 Transferring Hazardous Waste 68

8.9 **Miscellaneous Units** 69

8.9.1 Service Center Management Procedures 69

8.10 **Expected Air Emissions From Facility Operations** 69

9.0 OTHER FEDERAL/STATE LAWS 70

9.1 **Air Regulations** 70

9.2 **Water Regulations** 70

9.3 **Chemical-Specific Regulations** 71

9.4 Location-Specific Regulations 71

10.0 PART B CERTIFICATION 73

10.1 Facility Certification 73

10.2 Engineering Certification 73

11.0 POTENTIAL CONTINUING RELEASES AT PERMITTED FACILITIES 74

11.1 Solid Waste Management Units 74

APPENDICES

A. PART A APPLICATION

Exhibit A-1 Part A Application

B. TYPICAL PROCESS FLOW DIAGRAMS/MAPS AND FACILITY DRAWINGS

Figure B-1 Typical Handling Process for Used Parts Washer Solvent
Figure B-2 Typical Solvent Use and Regeneration Loop
Figure B-2a Typical Unit Process for Handling Bulk Antifreeze
Figure B-3 Typical Unit Process For Handling Spent Immersion Cleaner, Dry Cleaning Waste and Paint Waste
Figure B-4 Topographic Map
Figure B-5 Site Location Map
Figure B-6 Zoning Map
Figure B-8 Wind Rose – Peoria, Illinois
Figure B-10 Flood Plain Map
Figure B-11 Traffic Pattern For Antifreeze Tank
Figure B-12 Traffic Pattern for 4-Pack Tank Farm
Figure B-13 Traffic Pattern For Flammable Storage Shelter
Figure B-14 Traffic Pattern For Container Storage Area
Figure B-15 Topographic Details Within 1000 Feet

C. ANALYTICAL DATA

Exhibit C-1 Annual Waste Stream Re-characterization Analysis:
Waste Parts Washer Solvent 105
Waste Parts Washer Solvent 105/150
Waste Parts Washer Solvent 150
Waste Aqueous Parts Cleaner Solution
Waste Aqueous Brake Cleaner
Waste Dry Cleaning Filter Powder
Waste Paint Gun Cleaner
Waste Immersion Cleaner
Waste Parts Washer Sludge
Waste Paint Wastes- Other
Waste Dry Cleaner Bottoms
Waste Parts Washer Tank Bottoms

Table C-1 Parameters and Rationale For Hazardous Waste Analyses
Table C-2 Parameters and Test Methods
Table C-3 Methods Used To Sample Hazardous Waste

D. EQUIPMENT INFORMATION

Tank Figures:

Figure D-1 Solvent Dispenser Tree Installation Details
Figure D-2 Drum Washer Bracket
Figure D-3 Drum Washer Schematic and Details
Figure D-4 Example Container Storage Area Pallet Layout
Figure D-5 Example Flammable Storage Shelter Pallet and Drum Layout
Figure D-6 Container Storage Area with Containment Calculations
Figure D-7 2-Bay Flammable Storage Shelter
Figure D-8 New Return and Fill to Tank Farm Piping Plan
Figure D-8a Used parts Washer Solvent to New Return and Fill Piping Plan
Figure D-8b Pipe Bridge Plan, Elevation, and Details (Proposed)
Figure D-9 Used Parts Washer Solvent 20,000 Gallon Vertical Storage Tank
Figure D-10 Environmental Piping Schematic - Used Parts Washer Solvent
Figure D-11 Used Antifreeze 10,000 Gallon Horizontal Storage Tank
Figure D-12 Environmental Piping/Schematic - Used Antifreeze
Figure D-13 Horizontal Tank Piping Plan
Figure D-14 Used Antifreeze Horizontal Tank Concrete Plan and Details
Figure D-15 Pipe Heat Tracing Details
Figure D-16 Return/Fill and Warehouse Area Process Piping Plan
Figure D-17 Return/Fill and Warehouse Area Exhaust Fan and Ductwork Plan
Figure D-18 Return/Fill and Warehouse Area Power Plan
Figure D-19 4-Pack Tank Farm Plan and Details
Figure D-20 Moorman Bros. Tank Gauge Details
Figure D-21 Used Parts Washer Solvent High Level Alarm System Diagram
Figure D-22 Horizontal Tank Level Gauge
Figure D-23 Used Antifreeze High Level Alarm System Diagram
Figure D-24 Equipment & Lighting Fixture Schedules
Figure D-25 Electrical Panel Board Schedules
Figure D-26 L.C.T. Electronic Control Cabinet Details
Figure D-27 Electrical Details
Figure D-28 SK5213 Pump Control Panel Modifications
Figure D-29 SK5213 Pump Control Panel Modified Wiring Diagram
Figure D-30 Drum Washer Control Panel Diagrams
Figure D-31 Control Wiring Diagram Explosion Proof Box
Figure D-32 Typical Pallet Configuration for 30-Gallon Drum
Figure D-33 Typical Pallet Configuration for 16-Gallon Drum
Figure D-34 Typical Pallet Configuration for 16-Gallon Split Drum
Figure D-35 Typical Pallet Configuration for 5-Gallon Drum

E. ENGINEERING ASSESSMENTS AND OTHER RELATED DATA

Drum and Container Exhibits:

Exhibit E-1 Engineering Assessment- Container Storage Area

Exhibit E-2 Engineering Assessment- Flammable Storage Area
Exhibit E-3 Secondary Containment Calculations;
Container Storage Area
Flammable Storage Area
Return and Fill Area

Tank Exhibits:

Exhibit E-4 Secondary Containment Calculations
Solvent Tank Farm Area
Self-Contained Antifreeze Tank
Exhibit E-5 Ultrasonic Thickness Assessment Results- 7/12/2002
Exhibit E-6 Tank Assessment;
Design and Integrity Assessment Used Solvent Storage Tank System
Exhibit E-7 Tank Assessment;
Design Engineering Assessment Used Antifreeze Tank System
Exhibit E-8 Installation Assessment of Used Antifreeze Tank System
Exhibit E-9 Tank Corrosion Data

F. PROCEDURES TO PREVENT HAZARDS

Exhibit F-1 Example Inspection Log Sheets for: Daily Inspection of Storage Tank System
Exhibit F-2 Example Inspection Log Sheet for: Daily Inspection of Container Storage Area
Exhibit F-3 Example Inspection Log Sheet for: Weekly Inspection of Safety and Emergency Equipment, Security Devices, and Miscellaneous Equipment
Exhibit F-4 Example Inspection Log Sheet for : Daily Inspection of Flammable Storage Area
Exhibit F-5 Example Inspection Log Sheet for: Daily Inspection of Return and Fill Area

Table F-1 Emergency Equipment List

G. EMERGENCY INFORMATION

Figure G-1 Site Emergency Evacuation Plan
Figure G-2 Emergency Equipment Plan

Exhibit G-1 Example Material Safety Data Sheets
Exhibit G-2 Emergency Information
Exhibit G-3 Employee Functions During An Emergency
Exhibit G-4 Standard Operating Procedures
Exhibit G-5 Notifications To Local Authorities

Exhibit G-6 Emergency Equipment List

H. TRAINING INFORMATION

Exhibit H-1 Job Descriptions
Exhibit H-2 Example Training Record Form

Table H-1 New Branch Manager Training
Table H-2 Introductory and Annual Training Topics For Facility Employees

I. CLOSURE AND POST-CLOSURE REQUIREMENTS

Exhibit I-1 Closure Schedule
Exhibit I-2 Closure Cost Estimate
Exhibit I-2a Soil Sampling Plan Outline
Exhibit I-3 Financial Assurance Mechanism For Closure
Exhibit I-4 Hazardous Waste Facility Certificate of Liability Insurance
Exhibit I-5 Notice in Deed of Hazardous Waste Activity on Property

J. OTHER FEDERAL LAWS

Exhibit J-1 Illinois EPA Permit to Operate Emission Source
Exhibit J-2 Illinois EPA Permit to Discharge Stormwater (NPDES)

K. CERTIFICATION DOCUMENTS

Exhibit K-1 Certification Statement
Exhibit K-2 Prior Conduct Certification Information

FACILITY DESCRIPTION

ABSTRACT

CORPORATE HEADQUARTERS:	Safety-Kleen Systems, Inc. 5400 Legacy Drive, Cluster II, Building 3 Plano, Texas 75024 (972) 265-2000
FACILITY ADDRESS:	Safety-Kleen Systems, Inc.(5-136-01) 14249 VFW Road Pekin, IL 61554 (309) 346-1818
GEOGRAPHIC LOCATION:	40° 31' 51" N 89° 39' 38" W
OWNER:	Safety-Kleen Systems, Inc. 5400 Legacy Drive, Cluster II, Building 3 Plano, Texas 75024 (972) 265-2000

DESCRIPTION OF ACTIVITIES: This facility is an accumulation point for various spent materials generated by Safety-Kleen customers, the majority of whom are small quantity generators. Wastes are ultimately shipped to a Safety-Kleen recycling facility or a contract reclaimer for processing.

PROPERTY DESCRIPTION: 2.4 acres with the following structures:

a) One building with offices, a return and fill station, a drum storage area, and product/equipment storage area.

b) Two warehouse buildings for product/equipment and container storage

c) Six above ground storage tanks (4-pack tank farm consisting of one (1) 20,000-gallon tank for clean solvent, one (1) 20,000-gallon tank for spent solvent and two 20,000-gallon tanks for used oil/oily water - all in concrete diking); one self-contained 10,000-gallon tank for spent antifreeze, and one double-walled 12,000-gallon tank for clean solvent.

d) One metal shelter rated for the storage of flammable product and/or containerized waste.

FACILITY TYPE: Storage of regulated wastes in an aboveground tank (S02) and in containers (S01).

STORAGE UNIT	NOMINAL CAPACITY (Gallons)	SECONDARY CONTAINMENT (Gallons)	MATERIALS TO BE STORED
Tank	20,000	39,006	Used Parts Washer Solvent (D001 and codes listed in the "NOTE[1]" below)
Tank	10,000	11,504	Antifreeze (codes listed in the "NOTE[1]" below).

[1]NOTE: D004, D005, D006, D007, D008, D009, D010, D011, D018, D019, D021, D022, D023, D024, D025, D026, D027, D028, D029, D030, D032, D033, D034, D035, D036, D037, D038, D039, D040, D041, D042, and D043

Container Storage - Warehouse	10,560	2,018	Dumpster/Drum Washer Sediment: (D001 and codes listed in the "NOTE[2]" below) Immersion Cleaner (codes listed in the "NOTE[2]" below). Dry Cleaning Waste (F002 and codes listed in the "NOTE[2]" below). Antifreeze (codes listed in the "NOTE[2]" below). Paint Wastes (D001, F003, F005 and codes listed in the "NOTE[2]" below)
Container Storage - Flammable Materials Storage Shed	2,184	1,122	Paint Wastes (D001, F003, F005 and codes listed in the "NOTE[2]" below)

[2]NOTE: D004, D005, D006, D007, D008, D009, D010, D011, D018, D019, D021, D022, D023, D024, D025, D026, D027, D028, D029, D030, D032, D033, D034, D035, D036, D037, D038, D039, D040, D041, D042, and D043

1.0 FACILITY DESCRIPTION

1.1 DESCRIPTION OF BUSINESS ACTIVITY

Safety-Kleen Systems, Inc. is an international service-oriented company whose customers are primarily engaged in automotive repair, industrial maintenance and dry cleaning. The company has been operating since 1968 offering solvents collection and reclamation services for its customers, most of whom generate less than 1,000 kg (2,200 pounds) per month. The Pekin Service Center has been in operation since April 1, 1976 and typically operates Monday through Friday from 6:00 a.m. to approximately 8:30 p.m. The service center Branch General Manager has the ultimate responsibility for the facility's operations. In the event of his/her absence, a qualified designate will assume the responsibility.

Currently, Safety-Kleen offers several services, which involve the accumulation, storage and transfer of used materials. These materials are transported from the Pekin Service Center to one of the Safety-Kleen recycle centers, a contract reclaimer, or other permitted facility. Many of these materials are returned to customers as usable product. A description of each of these services follows. Additional information describing the business activity of the facility is provided in the Part A Application, located in Appendix A.

1.1.1 Parts Cleaner Service

The original service offered by the company in 1968 was the parts cleaner service and it remains the primary business activity. This service involves the leasing of a degreasing unit, which consists of a reservoir and a degreasing area. The reservoir contains a degreaser such as petroleum naphtha solvent, immersion cleaner, or aqueous cleaner. On a regularly scheduled basis, a Safety-Kleen sales representative cleans and inspects the parts cleaner unit and replaces the reservoir of used material with one of clean (most often recycled) product. The drums of used solvent are placed on the route truck and transported back to the service center at the end of each day.

Safety-Kleen has also established a parts cleaner service for users who own their machines. This service, known as the Customer Owned Machine Service (COMS), provides the same solvent reclamation service as described above, to customers regardless of machine model.

The used solvent is transferred from the containers to a storage tank at the service center and containers of product are prepared for the next day's services. Periodically, a tanker truck is dispatched from one of the recycle centers to deliver a load of clean solvent and collect the used solvent at the service center.

A second type of parts washer, the immersion cleaner, is available for the removal of varnish and gum, from such equipment as carburetors and transmissions. This

machine consists of an immersible basket with an agitator affixed to a container of a non-halogenated hydrocarbon mixture. Used immersion cleaner solvents are typically not placed in the used parts washer solvent tank at the facility. The used immersion cleaner solvent remains in the container after delivery to the service center, where it is stored in the container storage area. Periodically, these wastes are transported to a reclaimer and the regenerated solvent is distributed to Safety-Kleen customers for use as a product.

1.1.2 Dry Cleaner Service

In 1984, Safety-Kleen began offering a service for the collection of filter cartridges and still bottoms contaminated with dry cleaning solvents (usually perchloroethylene). These wastes are containerized on the customer's premises and are periodically collected by a Safety-Kleen representative. The containerized waste is accumulated in a contained area of the warehouse for shipment to a Safety-Kleen accumulation center, recycle center, or other reclaimer. Dry cleaning wastes include filter cartridges, powder residue, still residue, and still condensate.

1.1.3 Paint Waste Collection Service

In 1986, Safety-Kleen initiated a paint waste reclamation program to service the automobile body repair business. Paint gun cleaning machines are leased to customers with a reservoir of lacquer thinner (for cleaning the paint guns). On a periodic basis the reservoir is replaced and spent solvent is taken back to the facility for shipment to a reclamation facility. Wastes containing various thinners and paints are also collected in containers on the customer's premises. The Safety-Kleen representative collects these containers and stores them in the container storage area. These wastes are periodically shipped to a reclaimer and the regenerated solvent is distributed to Safety-Kleen customers for use as product.

1.1.4 Spent Antifreeze Collection

In 1990, Safety-Kleen began offering a spent antifreeze (ethylene glycol) collection service for automobile service station customers. The customer, on the customer's premises, deposits spent antifreeze into carboys. The carboy is then pumped into a tanker truck or into drums by a Safety-Kleen representative and transported to the Pekin Service Center. The spent antifreeze is then stored in a tank or in drums until it is shipped to a Safety-Kleen recycle center or other reclaimer.

1.1.5 Fluid Recovery Service

Safety-Kleen offers a fluid recovery service (FRS) to its customers. Under this service, the Pekin Service Center manages hazardous wastes on a ten-day transfer basis. Some non-hazardous wastes are managed through this service as well. This service

involves picking up containerized "FRS" wastes from generators and transporting them to the facility for temporary storage. The containers are accumulated in a transfer waste storage area at the service center for transport to a Safety-Kleen accumulation center, recycle center, or other reclaimer.

Fluid recovery service waste may include cleaning solvents, halogenated solvents, acids and caustics, lacquer thinners and paint wastes, imaging wastes, coolants, and various other hazardous or non-hazardous materials. These wastes are transported in containers that meet DOT specifications (if required), and are segregated at the facility according the DOT requirements in 49 CFR 174.81.

1.2 DESCRIPTION OF THE FACILITY

The Pekin, Illinois Service Center includes the following structures:

a) One building with offices, a return and fill station, a drum storage area, and product/equipment storage area;

b) Two warehouse buildings for product/equipment and container storage;

c) One 20,000-gallon aboveground storage tank for clean solvent, one 20,000-gallon aboveground storage tank for spent solvent, and two 20,000-gallon aboveground tanks for used oil/oily water storage - all in concrete diking; one self-contained 10,000-gallon aboveground storage tank for spent antifreeze, and one double-walled 12,000-gallon aboveground storage tank for clean solvent;

d) One metal shelter for the storage of product and/or containerized waste; and

e) One outdoor return and fill station (to be closed).

The site plan showing current site configuration is provided in Appendix B. At the time of this submittal (May 2, 2003), Safety-Kleen intends to conduct partial closure on the outdoor return and fill station and the container storage area located to the south of the tank farm. Safety-Kleen will complete and permit the indoor return and fill station and container storage area noted as "proposed" on the site plan provided in Appendix B. A Class 2 Permit Modification will be submitted to the Illinois Environmental Protection Agency to modify the existing permit, while this permit renewal application is processed. The remainder of this permit renewal application addresses those units that are not planned for closure.

Descriptions of the surrounding area and of waste management practices at the Pekin Service Center follow. Applicable maps and facility drawings are in Appendix B.

1.2.1 Regional Description

The Pekin Service Center is located in Tazewell County, on VFW Road, which turns east from Route 29 about 1/3 mile south of Powerton Road. This area is zoned for industrial use and to the best of Safety-Kleen's knowledge, no easement or title, deed or usage restrictions exist which may be in conflict with operations at the site.

Tazewell County covers an area of approximately 434,560 acres or 649 square miles. The City of Pekin, where the service center is located, has a population of over 33,000. It is the largest city in the county and serves as a county seat. Pekin is the center of commerce and communications for the county, which is still largely rural.

The primary farming business consists of cash-grain/feed crops, which mainly consist of corn and soybeans. The climate is moderately warm in the summer and cold in the winter. The average summer temperature is 73° F and the average winter temperature is 25.4° F. The total annual precipitation is 56.09 inches with 60% falling between April and September. The average snowfall is 21.70 inches per year. The waste management units at the facility are not located in a 100-year flood plain.

The Pekin Service Center is located on the Dickinson-Onaga Soil Association. These soils in the area are dark brown, very well drained, gently and moderately sloping sandy loams. Overburden is generally 500 feet thick. The facility is located 500 feet above see level, and surface drainage is to the southwest. The nearest surface waters are the Illinois River, Lost Creek, and a small pond, located approximately 1.5, 0.25, and 0.25 miles away respectively. The wind rose for the area is presented in Figure B-8. There are no storm sewers, curbs, drains or sumps to manage storm water runoff. The runoff from the service center does not flow directly to a surface water body.

The facility obtains its drinking water from a shallow well on site. The City of Pekin is served by seven municipal wells developed in sand and gravel with depths ranging from 89 to 154 feet. The nearest well to Pekin Service Center is approximately 1 mile north of the facility.

No oil or gas wells are known to exist within 1 mile of the facility, nor is it within one-quarter mile of any parks, schools, wetlands or critical habitats. The Pekin Service Center does not include any land disposal facilities.

The state of Illinois is located in the relatively stable central lowland physiographic province. In Illinois, most seismic activity occurs in the southern portion of the state in the New Madrid Seismic Zone. In Tazewell and surrounding counties (McLean, Woodford, Logan, Mason, and Peoria), the predominant structural feature is belts of synclines and anticlines. No known structural features, other than horizontal bedding, exist in Tazewell County. No faults that experienced displacement during the Holocene time exist within 200 feet of the facility.

The non-building areas of the facility are either gravel, or paved with asphalt, or concrete, as noted in the site plan in Appendix B. Safety-Kleen construction documents

typically indicate a flexible (asphalt) pavement 3-4 inches thick over an aggregate base 6-8 inches thick for the areas requiring heavy-duty pavement. Based upon the pavement design and the condition of the pavement, it appears the load bearing capacity of the facility is adequate.

The majority of the vehicular traffic and the loading/unloading operations occur at or near the return and fill station/drum storage area and the tank farm area. These areas are paved with asphalt and concrete. The entrance to the facility is on VFW Road, which is the major access road to the facility. The vehicles that daily travel the routes between the service center and its customers use the two-lane approach driveway. The trucks dispatched from the recycle center to deliver and pick up fresh and used solvents perform these activities at the aboveground tank area and at the overhanging doors of the container storage areas.

1.2.2 Waste Management Practices

The Pekin Service Center was designed to facilitate the handling and storage of the wastes resulting from the services offered by Safety-Kleen. The aboveground storage tanks, container storage areas and return and fill station all have secondary containment and the service center has the equipment necessary for employees to safely manage waste onsite. Appendix B contains drawings of the waste management facilities.

Used parts washer solvent is accumulated in a 20,000-gallon aboveground storage tank via the return and fill station. DOT approved drums and containers of used solvent are poured into the dumpster/drum washer unit in the return and fill station. The drawings in Appendix D provide additional details on the dumpster/drum washer unit. The used solvent is then pumped from the dumpster/drum washer into the used solvent storage tank.

The return and fill station has secondary containment in the form of a slope floor and a pit and sump area under the equipment with a total capacity of 1,763 gallons. Construction details of the return/fill area and the dumpster/barrel washer are shown in Appendix D.

Used solvent is picked up from the customer's location in containers and returned to the service center on the route truck. Once at the service center, the containers of used parts washer solvent are removed from the route truck and poured into the dumpster/ drum washer unit. After its contents are poured into the dumpster, each barrel is placed on the washer unit. As the machine is turned on, the barrel rotates on the brush, cleaning the inside and outside of the barrel. The machine is turned off and the barrel is removed. The used solvent drains to the bottom of the machine and is automatically pumped to the used parts washer solvent storage tank. There is a basket in the unit that collects sludge. As necessary, this basket is removed and any sludge is removed and placed into a sludge drum for recycling.

The aboveground tanks have been designed in accordance with NFPA standards and are constructed of carbon steel painted white to reflect sunlight. Each tank is equipped with a high level alarm. The secondary containment of the tank farm is a steel reinforced concrete slab with dike walls with a sump to facilitate removal of liquids (precipitation).

The container storage area is typically used for the storage of (1) sediment from cleaning the dumpster in the return and fill station, (2) used immersion cleaner, (3) dry cleaning waste, (4) paint wastes and gun cleaner wastes, and (5) spent antifreeze containers. Occasionally, during tank cleaning or repair, used parts washer solvents may be stored in containers in the container storage area. Paint wastes, used paint gun cleaner and other flammable wastes may also be stored in the enclosed flammable materials storage shelter. The wastes are not mixed while on site and different wastes are segregated while at the facility. While the wastes are not incompatible with one another, they are segregated for inventory and quality control purposes.

The container storage area has secondary containment in the form of a concrete slab floor with curbing and a concrete trench covered by a metal grate. No more than ten times the volume of the storage area's secondary containment will be stored in a container storage area at any time.

The metal "flammable" storage shelter has containment in the form of interlocking metal pans beneath the shelter. A metal cap is placed over the joints between pans to prevent spills from migrating between the pans. The caps are sealed to further prevent wastes from migrating outside the containment. The metal pans also contain overflow pipes that interconnect the pans. This design allows a potential spill in one pan to drain into adjoining pans without overflowing an individual pan. Drawings in Appendix D provide containment construction details.

The containers in both the container storage area and the enclosed metal shelter will be stored in the configuration shown in Appendix D. Two feet of aisle space will be maintained between rows of pallets and 0.5 feet will be maintained between individual pallets within a row. Containers will be stored no more than 6.5 feet high, or the height of two containers stacked on pallets, whichever is greater.

WASTE ANALYSIS PLAN

ABSTRACT

Waste Description	EPA Waste Code Numbers	Facility Capacity [1]	Annual Amount [2]
Used Parts Washer Solvent	D001 [3]	20,000	189
Dumpster/Drum Washer Sediment	D001 [3]	10,560[4]	3.5
Used Immersion Cleaner	Foot note [3]	10,560[4]	7.0
Dry Cleaning Waste	F002 [3]	10,560[4]	48.0
Paint Waste	D001, F003, F005 [3]	2,184[5] 10,560[4]	14.3
Antifreeze	Foot note [3]	10,000	150

1 The facility capacity is in gallons.
2 The estimated annual amount is in thousands of gallons.
3 and D004 D005 D006 D007 D008 D009 D010 D011 D018 D019 D021 D022 D023 D024 D025 D026 D027 D028 D029 D030 D032 D033 D034 D035 D036 D037 D038 D039 D040 D041 D042 and D043.
4 The maximum volume stored in the container storage area will not exceed 10,560 gal.
5 The maximum volume stored in the flammable materials storage shelter will not exceed 2,184 gal.

2.0 WASTE ANALYSIS PLAN

2.1 INTRODUCTION

This section describes the chemical and physical nature of the hazardous wastes stored at the Pekin Service Center and the waste analysis plan for evaluating the wastes to assure that sufficient information is available for their safe handling and storage, and that the waste being accepted matches the waste described on the manifest. The information submitted is in accordance with the requirements of 40 CFR 270.14 (b)(2) and (3), 40 CFR 264.13, and U.S. EPA Publication PB94-963603, OSWER 9938.4-03, Waste Analysis at Facilities that Generate, Treat, Store, and Dispose of Hazardous Waste.

2.2 ABSTRACT

Safety-Kleen is an international supplier and reclaimer of parts-cleaner solvents known as parts washer solvent and immersion cleaner. Safety-Kleen provides these part-cleaning solvents to businesses engaged in services such as industrial maintenance and automotive repair, where solvents are used to clean oil, grease, and dirt from metal parts. Safety-Kleen primarily operates as a closed-loop waste recovery service. When the solvents can no longer be used effectively, they are collected by Safety-Kleen and replaced with clean solvents. The used solvents are brought back to the Safety-Kleen service center. Safety-Kleen service centers also collect used materials from the dry cleaning industry and paint waste/used lacquer thinners. These materials are routinely picked up from customers and transported to the service center, and then ultimately to a Safety-Kleen approved recycling facility. Lastly, Safety-Kleen collects and handles hazardous 'transfer' wastes and non-hazardous wastes, which are not a subject of this Waste Analysis Plan.

The used solvents of the Safety-Kleen waste streams are the primary feedstock for the generation of Safety-Kleen solvent products. As a result, quality control of the used solvents is necessary to ensure that reclamation occurs in the safest and most efficient manner possible. The purpose of this Waste Analysis Plan is to provide the information needed to manage the hazardous wastes the service center is permitted to store by establishing procedures consisting of 1) Qualitative/Visual Waste Analysis, and 2) Quantitative Waste Analysis. These procedures also provide the quality control of the used solvents for the purpose of reclamation.

Safety-Kleen generates dumpster/drum washer sediment from washing/cleaning drums containing used parts washer solvent (consisting of soils, oils, grease, water, small amounts of solvent, and some metal parts). Safety-Kleen also generates waste solvent tank bottom sediment, discarded personal protective clothing, spill debris, and sampling debris. Characterization of these Safety-Kleen generated wastes is based on knowledge of the waste stream. The dumpster/drum washer sediment and the tank bottom sediment are derived from the used parts washer solvent. These wastes are managed as hazardous

waste according to the Toxic Characteristic Leaching Procedure (TCLP) for metals and organic TCLP codes. The wastes are also ignitable.

Safety-Kleen also generates gloves, rags, used sampling equipment and occasional spill debris from product lines. The characterization of these generated wastes is based on knowledge of the waste stream that generated the used gloves, rags, and spill debris. All waste generated by Safety-Kleen, with the exception of dumpster/drum washer sediment, are stored less than 90 days and are therefore, not a subject of this Waste Analysis Plan.

Safety-Kleen's customers are typically conditionally exempt small quantity generators who operate businesses that generate only one type of hazardous waste. As described above, Safety-Kleen has extensive knowledge of the waste streams it accepts. Knowledge of these waste streams is the basis for this Waste Analysis Plan. This knowledge is confirmed by fingerprint analysis (Qualitative Waste Analysis), and further confirmed by Quantitative Waste Analysis. The following sections of this Waste Analysis Plan provide waste management procedures, and include sections on quality control procedures as well as a description of the wastes, and waste analysis procedures which include sections on Qualitative/Visual Waste Analysis (field testing) and Quantitative Waste Analysis.

2.3 WASTE MANAGEMENT/QUALITY CONTROL PROCEDURES

As discussed earlier in the Facility Description section of this permit application, the materials collected at the service centers are typically collected from generators that use a single process. Safety-Kleen services thousands of customers nationwide, and has operated for over 30 years. As such, the composition and quality of these materials are well known, and the Company's operating experiences have shown that the used materials collected rarely deviate from Company specifications. The used materials managed at the Pekin Service Center are the primary feedstock for the generation of Safety-Kleen products. As a result, control of the used materials is necessary to ensure that reclamation occurs in the safest and most efficient manner possible. Safety-Kleen controls the use and management of its solvents by:

- Limiting the solvents stored to those compatible with one another and their containers.
- Limiting the uses of each type of solvent (for example, dry cleaner waste is only collected from dry cleaners).
- Determining the customer's type of business, the purpose for which he will use the machine, and recording this information on the service document.
- Training the customer to use the machine properly.
- Training employees to inspect used solvent and determine whether or not it is acceptable (Qualitative Waste Analysis).

- Indicating on the service document, every time a waste is collected, whether the used solvent meets Safety-Kleen's acceptance criteria.

- Marking each container with the customer's name, address, and EPA ID number (if applicable).

- Keeping a record of each incoming and outgoing shipment in the operating log at each facility.

- Not combining the containers of spent immersion cleaner, dry cleaning, and paint waste/waste lacquer thinner collected at the Pekin Service Center with other containers of waste. The wastes are stored and transported in the original containers in which they are collected.

- Informing customers of their responsibilities for proper waste management by requiring each customer to sign a service document containing the following information:

    a. Name, address, and EPA ID number of the facility to which the waste is being shipped.
    b. Name and title of the owner/operator.
    c. Generator status (CESQG, SQG, or LQG).
    d. Customer's name, address, and EPA ID number (if applicable); and,
    e. Description and amount of waste generated.

2.4 DESCRIPTION OF WASTES

The Safety-Kleen Pekin Service Center has been operating since April 1976. A permit to store hazardous wastes was issued in November 1993. The hazardous properties of the wastes have been determined by Safety-Kleen's extensive experience in handling these waste streams, knowledge of the processes that produce each waste, and extensive analytical data. Example analytical data is provided in Appendix C. The following sections describe each waste stream.

2.4.1 Used Parts Washer Solvent

Used parts washer solvent is received from customers in containers, and is accumulated in an aboveground storage tank via the return and fill station. Department of Transportation (DOT) approved containers of used solvent (hazardous or non-hazardous) are poured into a dumpster at the return and fill station, which in turn is pumped into the bulk storage tank. The used parts washer solvent consists primarily of the solvent, water, solids (i.e., metal bearing residue), oil, and grease, i.e., the materials washed off of the parts being degreased/cleaned. The used parts washer solvent may be ignitable (D001) and toxic using the Toxic Characteristic Leaching Procedure and carry

the codes D004 through D011, D018, D019, D021 through D030, and D032 through D043.

Used parts washer solvent is compatible with the containers and tanks in which it will be stored. Used parts washer solvent is also compatible with wastes that will be stored or handled in the permitted areas of the facility.

Safety-Kleen generates drum washer sediment from the washing/cleaning of drums previously containing parts washer solvent. This waste consists of soils, oils, grease, water, small amounts of solvent, and small metal parts/shavings. The sediment may be ignitable (D001) and toxic using the Toxic Characteristic Leaching Procedure and carry the codes D004 through D011, D018, D019, D021 through D030, and D032 through D043. This sediment is site generated waste and is only subject to this Waste Analysis Plan when it is stored at the facility for a period of more than 90 days.

Immersion cleaner is collected in containers at the customer's place of business and is then transported to the facility and is stored in the container storage area. Contamination found in immersion cleaner is typical of that found in auto repair shops and may include benzene from gasoline and perchloroethylene and/or trichloroethylene from specialty cleaning solvents. The used material is basically unchanged from its product state, except that oil, grease, and other solids may be entrained in the solvent during cleaning operations. The immersion cleaner may be toxic using the characteristic leaching procedure (D004 through D011, D018, D019, D021 through D030 and D032 through D043).

Used immersion cleaner is compatible with the containers in which it is stored and immersion cleaner wastes are also compatible with other wastes stored in the permitted areas of the facility.

2.4.2 Wastes Resulting from the Dry Cleaner Service

Used dry cleaning materials consist of used filter cartridges, still condensate, powder residue from diatomaceous or other powder filter systems and still bottoms. These materials are placed into containers on the customer's premises. The containers are then placed in the container storage area. The used materials generated by dry cleaners are described in detail in Section 2.6.3.

Wastes generated from dry cleaning operations contain various concentrations of tetrachloroethylene, mineral spirits (petroleum naphtha), trichloro-trifluorethane, and other spent products. Used dry cleaning materials may be listed wastes, carrying the F002 code. Used dry cleaning materials may also be ignitable and exhibit toxicity characteristics under the following RCRA codes: D004 through D011, D018, D019, D021 through D030, and D032 through D043.

Used dry cleaning materials are compatible with the containers in which they are stored. They are also compatible with other wastes stored in the permitted areas of the facility.

2.4.3 Paint Wastes/Used Lacquer Thinners

Paint wastes consist of various lacquer thinners (used paint gun cleaning solvent) waste paint, paint booth filters, and still bottoms from the distillation of waste paint. The primary constituents of the waste are non-halogenated solvents (toluene, xylene, and methyl ethyl ketone). The paint waste/used lacquer thinner reclamation program primarily services automobile body repair shops. The waste is generated through various painting operations at the customer's location, where they are containerized. These materials may carry the following codes: F003, F005, D001, D004 through D011, D018, D019, D021 through D030, and D032 through D043). The waste is collected in containers at the customer's place of business and the containers are transported and stored in the permitted areas at the Pekin Service Center.

The paint wastes/lacquer thinners are compatible with the containers in which they are stored. The waste is also compatible with other wastes stored or handled in the permitted areas of the facility.

2.4.4 Spent Antifreeze

Spent antifreeze is about two-thirds water with the remaining being antifreeze (ethylene glycol) and contaminants. The storage tank for spent antifreeze and warehouse container storage area are both permitted to store wastes with the following TCLP waste codes: D004 through D011, D018, D019, D021 through D030, and D032 through D043). The spent antifreeze is collected in a tanker truck from carboys or placed in drums at the customer's place of business. The material/containers are transported and stored in a permitted unit/area at the Pekin Service Center.

2.5 WASTE ANALYSIS PROCEDURES

The Waste Analysis procedures for the Pekin Service Center are comprised of knowledge of the waste streams handled, coupled with Qualitative Analysis (field testing) and Quantitative Waste Analysis. These procedures have been developed in order to meet Waste Analysis Requirements as found in 40 CFR 264.13. This Waste Analysis Plan also conforms to the requirements of U.S. EPA Publication PB94-963603, OSWER 9938.4-03, *Waste Analysis at Facilities that Generate, Treat, Store, and Dispose of Hazardous Wastes*. The regulations require that before an owner or operator transfers, treats, stores, or disposes of any hazardous waste, a detailed chemical and physical analysis of a representative sample of the waste must be obtained. This analysis, at a minimum, must contain all of the information that must be known to transfer, treat, store, or dispose of the waste. The analysis may include data developed under 40 CFR 261 of the regulations, and existing published or documented data on the hazardous waste stream or on hazardous waste generated from similar processes.

Safety-Kleen services thousands of customers nationwide and has operated for over 30 years. As such, the Company has determined that the wastes generated are well

known, and relatively homogeneous. Through its Recharacterization Process, Safety-Kleen evaluates the homogeneity of its waste streams. From this Recharacterization Process, which is a thorough statistical analysis of the Company's waste streams, Safety-Kleen determines the pervasive TCLP codes for each waste stream. Therefore the presence or absence of specific TCLP codes may change over time. The presence of toxic constituents in small concentrations (PPM) does not affect the handling or management of the wastes at the Pekin Service Center. This does not affect the handling or management standards required, or Safety-Kleen's ability to recycle the material and maintain the health and safety of workers and the environment. The Safety-Kleen Pekin Service Center is permitted for the full range of TCLP codes that could be present in each permitted waste stream. As stated above, the actual codes present in the wastes received may vary slightly each year; however, the permit includes the variety of waste codes that could be pervasive in each stream, and that can be safely managed at the facility.

The regulations also require an owner or operator to inspect and, if necessary, analyze any hazardous waste received at the facility to determine whether it matches the identity of the waste specified on the manifest or shipping paper. This verification, or 'fingerprint' analysis is accomplished through the Qualitative Analysis (field-testing). Detailed chemical analysis will be performed if the waste does not meet the Qualitative/Visual Analysis Criteria. It would never be feasible for Safety-Kleen to perform a detailed chemical analysis of every customer's waste; over 90% of the Safety-Kleen Pekin Service Center's customers are small businesses.

If a particular drum of waste does not meet the acceptance criteria, the Safety-Kleen Service Representative will either sample the waste for testing at a laboratory, to determine if the waste has been contaminated, or reject the waste.

As an additional safeguard, Safety-Kleen requires customers to inform the Company of changes in waste characteristics. Each customer is required to sign documents, which assure that the customer will inform Safety-Kleen of such changes. If Safety-Kleen obtains information indicating that the generator's process has changed to the extent that the composition of the waste stream accepted by Safety-Kleen may have changed, a detailed chemical analysis of the waste will be performed.

2.6 QUALITATIVE WASTE ANALYSIS

Safety-Kleen inspects each drum of waste when it is collected at the customer's location. Safety-Kleen examines the waste for volume, appearance, consistency and odor. The sales representatives are intimately familiar with the characteristics of the waste Safety-Kleen receives, based upon experience and prior training. Based on the known waste characteristics, Safety-Kleen established the specific acceptance criteria set forth below, to be used by Safety-Kleen personnel in their visual inspections. These acceptance criteria enable Safety-Kleen to ensure that the waste being picked up is not contaminated. Acceptance criteria is documented in the service agreement at the time of waste inspection at the customer's location.

A color different from that described below for each solvent may indicate the presence of a foreign material. Similarly, a volume measured in the drum at the time of pickup greater than the expected amount may indicate that something has been added to the solvent. Procedures have been developed to reject or further test the waste if it fails the acceptance criteria.

If a particular drum of waste does not meet the acceptance criteria, the Safety-Kleen service representative will either (1) sample the waste for testing, as described below, to determine whether the waste has been contaminated; or (2) reject the drum of waste. If the waste is sampled for further analysis, the service representative will take a sample of the waste and then seal the drum and label it as a hazardous waste. The drum is left with the customer pending the results of the laboratory tests. The laboratory testing involves analyzing the suspect waste for some or all the following procedures in order to identify the waste composition: flashpoint, pH, water content, specific gravity, and the presence of organic compounds. No laboratory testing is done at the Pekin Service Center.

If the laboratory analysis reveals that the sampled waste is not contaminated, and meets the requirements of the facilities WAP, Safety-Kleen will accept the waste from the customer.

If the laboratory confirms that the waste is contaminated outside of Safety-Kleen's acceptance criteria, the generator will be responsible for securing an alternate means of disposal.

The following is a description of the specific acceptance criteria for each waste stream.

2.6.1 Used Parts Washer Solvent

The qualitative acceptance criteria for determining whether used parts washer solvent has been contaminated are volume, odor, and color, the most significant of which is volume. DOT approved containers of clean solvent are filled with approximately the same amount of solvent (according to container size) each time. Depending on the length of time between services, the quantity of used solvent to be picked up should be similar to the quantity of clean solvent that was originally delivered to the customer. When the amount of liquid is substantially greater than that initially leased, relative to the service term, the Safety-Kleen representative will sample the waste for laboratory testing as described above, or will reject the waste.

In addition to the volume criteria, the odor of the used solvent will clearly indicate whether the waste has been contaminated. Used parts washer solvent has a very distinctive odor. The service representatives are expressly instructed not to deliberately sniff the waste. However, if the parts washer solvent has been contaminated, the service representative would immediately notice a difference in the odor when he/she services the machine.

The used parts washer solvent is also visually inspected for its color. Parts washer solvent, in the product state, has either a greenish tint, a golden tint, or is clear, depending on the material. As the solvent is used, it turns brown in color. The more the solvent is used, the darker it becomes, until it is almost black. However, certain contaminants containing dyes and color pigments (such as transmission fluid, printer's ink, or water-based paint) may change the color of parts washer solvent to other colors. Therefore, if the used parts washer solvent does not appear to be green, brown, or black (or of color appropriate to its normal usage), the service representative will sample the waste for possible contamination as described above, or will reject the waste.

2.6.2 Used Immersion Cleaner

The acceptance criteria for determining by visual inspection whether used immersion cleaner has been contaminated are volume, color and physical state. DOT approved containers containing a specified or known amount of clean immersion cleaner (according to container size) are delivered to the customer. Spent immersion cleaner is picked up from the customer in original containers. Depending on the length of time between services, the quantity of used solvent to pick up should be similar to the quantity of clean solvent that was originally delivered to the customer. If the drum contains significantly more than the amount that was initially delivered, relative to the service term, the Safety-Kleen representative will sample the waste for laboratory testing, or will reject the waste.

Product immersion cleaner is amber in color. As this cleaner becomes dirty, it turns brown in color. The more it is used the darker it becomes, until it is almost black. Therefore, if spent immersion cleaner does not appear to be amber, brown or black, the service representative will either sample the waste for possible contamination or reject the drum of waste.

2.6.3 Used Dry Cleaning Materials

Dry cleaning wastes consist of spent filter cartridges, the powder residue, still condensate (separator water), and still bottoms.

Spent Filter Cartridges

Spent filter cartridges are typically placed in either a 15-gallon ("split 30") drum, which holds three cartridges, or a 16-gallon drum that holds either one jumbo filter cartridge or two smaller cartridges. It is obvious to the service representative whether the items in the drums are filter cartridges. The filter cartridges retain the dry cleaning solvent, oil, grease, and un-dissolved elements (such as lint and soil). The filter construction materials (steel, paper, clay, and/or carbon) are also part of the waste. The solvent retained in the filter cartridge generally amounts to less than 50% of the total cartridge weight, but the cartridges will vary from dry to wet.

Powder Residue

The criteria for the acceptance of powder residue are consistency and color, the former being the more significant criterion of the two. A drum of powder residue should not contain any pure liquid. The service representative will visually inspect and physically shake the container in order to determine if any free liquids are present. As the name implies, it will be dry or "powdery", or have the consistency of a dry paste. If there is any liquid in the drum, the waste will be sampled for contamination or it will be rejected.

The powder residue is also inspected for color and should appear from beige to grayish-black. If the residue is not beige or grayish-black in color, the service representative will investigate the cause or he will sample the waste for contamination, or reject the waste.

Still Condensate

In some cases, dry cleaners will separate water generated from the dry cleaning still from the still residue. In these cases, Safety-Kleen will pick up solvent contaminated separator water in a separate container instead of mixed with the still bottoms. Its appearance is clear or slightly cloudy. Acceptance criteria include color and physical state (it is water-like).

Still Bottoms

After filtration, the dry cleaning solvent is distilled to remove the dissolved materials from the used solvent. These dissolved materials, or still residues, are in liquid or solid form and consist primarily of detergents, oil, grease, vinyl acetate (a sizing compound), water, and solvent. The criteria for the acceptance of dry cleaning still bottoms are consistency and color. The waste should have a highly viscous, tar-like consistency. If the consistency of the waste is too thin or if there is more than 1 inch of free liquid in the drum, the service representative will investigate the cause (some older equipment can produce still residue that is near liquid in form).

In addition to consistency, the still bottom waste is inspected for color. The waste should be dark brown or black in color. If the waste is a different color, the service representative will investigate the cause or he will sample the waste for contamination or will reject the waste.

2.6.4 Paint Waste/Used Lacquer Thinner

Paint wastes handled by Safety-Kleen include both lacquer thinner waste generated from the paint gun cleaning process and other miscellaneous paint waste

including still bottoms from the distillation of lacquer thinner and filters from paint spray booths.

Lacquer Thinner Waste

The significant criterion for determining whether lacquer thinner waste will be accepted is volume. Lacquer thinner is typically provided to customers in 5-gallon pails. The paint gun-cleaning machine, which contains the lacquer thinner, operates as a "closed-loop" system whereby there should never be a combined volume of more than 7½ -gallons of solvent in the two collection pails. The solvent is pumped from a tube in a left-hand pail (facing the machine) through the machine into a right-hand pail. The tube of the left-hand pail extends exactly halfway into the pail (i.e., to the 2 ½-gallon mark). The left-hand pail starts with 5 gallons of clean solvent, which will be pumped out as the machine is used to clean the spray guns. This process will continue until the left-hand pail contains 2 ½-gallons. If the service representative discovers more than a total of 7 ½-gallons of solvent in the two pails, he will investigate the cause or the waste material will be sampled for contamination or the waste will be rejected.

In the event that the customer is not utilizing a Safety-Kleen provided machine to clean his/her spray guns, the volume criteria used to determine acceptance will be similar to that described in Section 2.6.1 above.

Paint Waste

Paint wastes vary in consistency from fluid to highly viscous/solid/semi-solid. These wastes are most often collected from facilities where one process is managed and the possibility of cross-contamination from other chemicals is minimal. Comparable to the handling of immersion cleaner and dry cleaning wastes, containers of paint waste are inspected at the customer's location and transported to the service center for temporary storage.

2.6.5 Spent Antifreeze

Spent antifreeze is collected in carboys at the customer's place of business until it is picked up by Safey-Kleen and pumped into a tanker truck (or drums if a tanker truck is unavailable). Prior to transferring the spent antifreeze into the tanker truck or drums, the Safety-Kleen service representative is responsible for visually inspecting the waste. Spent antifreeze is typically yellowish green to blue or pink to white in color, with traces of orange, red or black discoloration due to ferric oxide. A slight sheen may be present on the surface of the spent antifreeze due to the presence of oils or other petroleum products. Sediment may collect in the carboy due to particulate matter from vehicle engines, rust, dirt, or other matter.

2.7 QUANTITATIVE TESTING

Due to Safety-Kleen's closed loop system, it is highly unlikely that wastes restricted from the facility would be accepted by mistake. Safety-Kleen facilities handle only a limited variety of wastes having well-defined physical and chemical properties. The majority of these wastes are generated from products originally supplied by Safety-Kleen. These permitted wastes are inspected by Safety-Kleen at the time of pickup for compliance with the acceptance criteria and subjected to qualitative analysis.

Based on historical operating and analytical records, it has been determined that the characteristics of Safety-Kleen's customers' waste streams in the past did not significantly change from year to year. Nearly 80% of Safety-Kleen's customers are in the automotive after-market business. Safety-Kleen's records of chemical analyses of their customers' wastes (particularly over the last ten years) demonstrates there has been a continuing reduction in the trace levels of certain TCLP constituents.

In addition to the qualitative testing described above, Safety-Kleen will perform quantitative testing when the waste does not meet the qualitative acceptance criteria and the generator requests Safety-Kleen to do so, or when the generator indicates there is a need to do so. Safety-Kleen also performs Recharacterization Analysis, as described below.

2.8 RECHARACTERIZATION OF WASTE STREAMS

Analyses performed at Safety-Kleen recycle centers are undertaken to safeguard the recycling process and to assure the product quality. In addition, each waste stream is recharacterized as needed. The following tables in Appendix C summarize a typical waste analysis plan practiced at the recycle center for the hazardous materials returned from the service center.

Table C-1 Parameters And Rationale For Hazardous Waste Analyses
Table C-2 Parameters And Test Methods
Table C-3 Methods Used To Sample Hazardous Waste

2.9 WASTE ANALYSIS PLAN UPDATE

Safety-Kleen will submit a modified waste analysis plan prior to the permitted storage of any new waste that is not included in the Part B Permit. Management of such wastes will require approval of the modified waste analysis plan by the IEPA. If a revision of the waste analysis plan requires a permit modification, the modification will be performed the pursuant to 40 CFR 270.42 and 35 Ill. Adm. Code 703.Appendix A,(B). This waste analysis plan will also be modified when sampling and material management methods change. Revision of the plan is the responsibility of the Environment, Health and Safety Department. In addition, waste analysis reports must be maintained at the Pekin Service Center until final closure of the service center.

2.10 MANIFEST REVIEW PROCEDURE

When Safety-Kleen receives or ships hazardous waste, the facility manager or his/her designate must review the manifest and check the information on the manifest for correctness.

Upon discovering a significant manifest discrepancy, the facility manager shall attempt to reconcile the discrepancy with the waste generator or transporter through telephone conversations or otherwise. If the discrepancy is not resolved within fifteen days after receiving the waste, the facility manager shall immediately submit to the Administrator a letter describing the deficiency and the attempts to reconcile it and a copy of the manifest or shipping paper at issue.

Significant manifest discrepancies are differences between the quantity or type of hazardous waste designated on the manifest or shipping paper and the quantity or type of hazardous waste the facility actually receives as follows:

- For bulk waste, significant discrepancies are variations of more than 10% in weight.

- For bulk waste, a significant discrepancy is any variation in piece count, such as a discrepancy of one drum in a truckload.

- Significant discrepancies in waste type are obvious differences which can be discovered by inspection or waste analysis, such as waste solvent substituted for waste acid or toxic constituents not reported on the manifest or shipping paper.

2.11 LAND BAN NOTIFICATION/CERTIFICATION FORMS

In accordance with 40 CFR 268.7, Safety-Kleen will provide notification and/or certification for waste banned from landfills as follows:

1. Printing the notice language on the manifest-such as for core business customers to branch shipments; or

2. Special forms for each regularly handled waste types (e.g., parts washer solvent, immersion cleaner, dry cleaning wastes, etc.); or

3. A general form that must be completed for unique or non-standard waste streams. These wastes will only be handled on a transfer basis, in accordance with 40 CFR 263.12.

This notice is required paperwork for all Safety-Kleen waste types. Shipments lacking the proper notice will not be accepted by any Safety-Kleen facility. When a shipment with the proper notice is received, the notice is kept in the files of the receiving

facility with the manifest or with the pre-print (shipping document) if a manifest is not used as described in 40 CFR 262.20(e).

2.12 WASTE MINIMIZATION

The very basis of Safety-Kleen's business is to provide recycling and reuse options to generators of hazardous waste. Safety-Kleen has taken a very pro-active position of assisting our customers in reducing and minimizing their generation of hazardous waste.

Safety-Kleen complies with the certification requirement of having a program in place that attempts to reduce the volume and toxicity of hazardous waste generated. It is important to note that Safety-Kleen facilities in Illinois are commercial Treatment, Storage, and Disposal (TSD) facilities and the hazardous wastes generated on site are minimal. Almost all of the hazardous waste managed at the facility is received from off site generators. Safety-Kleen's philosophy is that waste minimization goals are best met through the education of our customers on the benefits of waste minimization and by providing services to them, which will assist them in reducing hazardous waste. At the same time, it is prudent business sense to increase the customer base, which augments our closed-loop recycling operations.

Safety Kleen's primary line of business is the parts washer service. Other services include an immersion cleaner service, paint gun cleaner, and dry cleaning service. In each of these services, hazardous wastes from Small and Large Quantity Generators are manifested to the Safety-Kleen operated commercial TSD facility. The wastes are stored until sufficient quantities are accumulated for cost-effective transportation off-site, ultimately to a treatment facility. When hazardous wastes from CESQGs, SQGs, and LQGs are transported off-site, the wastes are manifested with Safety-Kleen as the generator.

A Safety-Kleen TSD facility does generate minimal amounts of hazardous waste during its daily operations. The wastes generated include, but are not limited to, dumpster sludge, PPE, absorbent materials and rags. All generated wastes are sent to a properly licensed facility for disposal.

PREPAREDNESS AND PREVENTION PLAN

ABSTRACT

SECURITY MEASURES-The site is secured as follows:

a. There is a chain link fence with three strands of barbed wire around the facility.

b. Warning signs are posted at all entrances and along the fence.

c. Locks are on all entrances to the facility.

d. There is nighttime outdoor lighting.

e. Electrical controls for all tank operations are inside the various buildings.

INSPECTION PROCEDURES-See Appendix F for an example copy of the facility inspection record.

REQUIRED EQUIPMENT-The emergency equipment requirement is met with the following:

a. Internal communications will be by voice and a loudspeaker paging system.

b. Telephones are available in the office building and the main warehouse area.

c. Fire extinguishers are available at numerous locations in the office, warehouse, tank farm, and metal shelter as indicated on the Emergency Equipment List (see Appendix G).

d. Water is available via the onsite shallow well.

3.0 PREPAREDNESS AND PREVENTION PLAN

3.1 SECURITY MEASURES

The facility is secured with a six-foot high chain link fence topped by three strands of barbed wire. All access gates are locked, and warning signs stating "Danger - Unauthorized Personnel Keep Out", which are visible from 25 feet, are posted at the entrances and at every 50 feet along the fence.

The office/warehouse buildings are secured with locks on all outer doors and warning signs are posted at all entrances to work and waste storage areas. The tanks are inaccessible in that material cannot be added to or removed from them without activating the pumps, the controls for which are inside the office building or located on the trucks. The pumps are not activated unless product or waste is being added to or removed from the tanks by Safety-Kleen personnel. As a result, the tanks and container storage area are accessible only to Safety-Kleen personnel.

3.2 INSPECTION PROCEDURES

The Branch General Manager or designee is responsible for carrying out and documenting the facility inspection (see Appendix F for example forms) for each operating day. He/she must note any repairs that are needed and assure that they are completed. If he/she cannot carry out the repairs him/herself, he/she must notify the Engineering Department and request assistance. Completion of repairs must also be noted on the facility inspection report. Records of the completed inspections will be maintained at the facility for a period of three years following the date of the inspection.

The facility inspection includes the following:

a. **Tank inspections-** At a minimum, each tank must be inspected each operating day. The inspections include checks of the high level alarms and of the volume held (according to the gauge) in each tank. Sudden deviations in the volumes will be investigated and their causes determined. If necessary, repairs must be initiated immediately. Typically, when the tank used to store spent solvent is 85% full, a pickup is scheduled with the Solvent Control Department in Safety-Kleen's corporate headquarters. The solvent level must not exceed 95% of the tank volume at any time. Electrical power to the high level alarm must be tested daily; it will sound when the level of material in the tank reaches 95% of capacity. All storage tanks at this facility are equipped with high-level alarms.

   The piping and secondary containment for the tanks must be checked for leaks, cracks or other deterioration. Any damage to tanks or piping (such as rust, seepage, or loose fixtures) or secondary containment must be noted and repairs initiated.

b. **Solvent dispensing equipment-** The solvent dispensing hose, connections and valves must be inspected for damage (such as cracks or leaks) and proper functioning. The pumps, pipes and fittings must also be checked for damage and proper functioning. Any damage to the solvent dispensing equipment must be noted and repaired.

c. **Container storage areas-** The container storage area (CSA) and flammable materials shelter (FMS) are inspected each operating day and the number and condition of the drums noted. The total volume of the spent materials held in the CSA and FMS shelter must not exceed ten times the volume of their respective secondary containment. The contents of any leaking or suspect drums must be placed in a drum of adequate integrity. Finally, the drums must be properly labeled and marked in accordance with US DOT and Illinois hazardous waste regulations. The secondary containment systems must be inspected for deterioration or failure. If cracks or leaks are detected, they must be repaired immediately.

d. **Return and fill station-** The dumpsters/drum washer (in the return and fill station) must be inspected each operating day for leaks and sediment build-up. Any leaks must be noted and repaired immediately. The secondary containment must be checked for cracks and gaps. Any accumulated liquid must be removed from the secondary containment system.

e. **Safety equipment-** The fire extinguishers must be checked weekly to insure that the units are charged and accessible. In addition, the operation of the telephone loudspeaker/paging system and the eyewash stations must be confirmed and the emergency equipment must be inspected for adequate content and accessibility. A list of required emergency and decontamination equipment is in Appendix F. A facility drawing illustrating the location of emergency equipment is included in Appendix G.

f. **Security-** The operation of each outside light, gate and lock must be checked weekly. In addition, the fence must be inspected for deterioration on a weekly basis. In addition, each lock and sign on or in the warehouse (including access to the return and fill station and power source for the tank pumps) must be checked weekly.

g. **Air Emissions Standards-** Each valve, flange and pump associated with the hazardous waste tank and spent antifreeze tank are marked, and listed on Figure D-10 (Environmental Piping Schematic-Used Solvent) and Figure D-12 (Environmental Piping Schematic – Used Antifreeze) respectively. Compliance with the Subpart BB standard will be achieved through facility inspections each day. A typical inspection form is included in Appendix F. Records of equipment monitoring and repair are maintained in the operating record.

If a potential leak is detected (by visual inspection, audible indication, or excessive odor), it will be noted on the inspection form. The spent parts cleaning solvent managed in the tank system is a heavy liquid (vapor pressure less than 0.3 kilopascals at 20 degrees C) and has a maximum concentration in the vapor phase of 2,000 PPM. Therefore, a photoionizer type instrument will not detect leaks at 10,000 PPM, and a leak will be observed upon visual inspection rather than by monitoring by a photoionizer. Any leak or potential leak must be repaired as soon as practicable, but at least within 15 days, with the first attempt at repair made no later than 5 days after the leak is detected. Additional information on Subpart BB is described in Section 8.6.

3.3 FACILITY DESIGN

The Pekin Service Center was designed to minimize the possibility of spills or fires and to minimize the effects of any accidents, which may occur. Specifications for the storage facilities, secondary containment and other equipment are in the appendices, and descriptions follow.

3.3.1 Tank Storage

The 20,000-gallon storage tank for used parts washer solvent is constructed 3/16" (1/4" thick in the lower third of the tank) carbon steel painted white to reflect sunlight. The waste tank is constructed in accordance with Underwriters Laboratories Standard 142 and is located more than 20 feet from the property line, in accordance with National Fire Protection buffer zone requirements. The secondary containment for the tank consists of a monolithically poured slab and dike wall. Both the slab (six-inch thick) and the wall (8-inch thick) are composed of steel reinforced concrete. The concrete has been sealed with a coating or liner to render it impermeable.

The 10,000-gallon aboveground, horizontal self-contained tank used for the storage of spent antifreeze is constructed of ¼-in carbon steel painted a light color to reflect sunlight and minimize corrosion. The tank has been designed in accordance with Underwriters Laboratories Standard 142 and is located more than 20 feet from the property line, in accordance with Table 2-6 of the *National Fire Protection Buffer Zone Requirements*. The tank is secured within the facility's perimeter fencing. Additional information pertaining to the spent antifreeze tank is included in the engineering drawings in Appendix D and tank assessment reports in Appendix E.

All tanks are equipped with an audible (buzzer) and visual (strobe light) high level alarms system, which will alert employees when the tanks are approximately 95% full. Additional information pertaining to the used parts washer solvent tank and spent antifreeze tank is included in the engineering drawings in Appendix D. Tank assessment reports are provided in Appendix E.

3.3.2 Ancillary Equipment

The proposed return and fill station is located adjacent to the container storage area and will contain a dumpster/drum washer unit. The unit will be approximately 3 feet deep by 6 feet wide by 4 feet high. The top lid will have a sliding door, which allows for adding material and will be closed during operation. The unit has a sump with a maximum design capacity of 40 gallons. The dumpster/drum washer will be tight-piped to the tank and all piping will be aboveground. The dumpster/drum washer is normally closed except during the removal of accumulated sediment. The return and fill area has secondary containment in the form a sloped concrete floor and a concrete pit and sump area under the dumpster/drum washer unit. Secondary containment calculations are provided in Appendix E. An engineering assessment of the return and fill station area and secondary containment is provided in Appendix E. An additional assessment of the return and fill station will be completed following installation of the proposed piping and equipment.

3.3.3 Container Storage

The slab and curbing and containment trench that provide containment for the container storage area are made of steel-reinforced concrete and the concrete has been poured so that no cracks or gaps exist between them. The concrete floor and containment trench are sealed with a coating that is compatible with the waste being stored, to render them impervious so as to contain leaks and spills until the collected material is detected and removed.

The interlocking metal pans beneath the flammable materials storage shelter are designed to contain spills. Construction details of the containment system are provided in Appendix D.

All containerized hazardous wastes are stored in containers that meet DOT specifications and the wastes are compatible with the containers in which they are stored. All containers are marked in accordance with 40 CFR 262.32. Containers are elevated above the concrete floor while in storage. Typical pallet layouts are shown in Appendix D. Pallets of wastes will be stacked up to 6.5 ft. high, or the height of two containers stacked on pallets, whichever is greater. Pallets will be arranged so that containers are visible and accessible from an aisle.

The total volume of materials stored in the container storage areas will not exceed ten fold the volume of the respective secondary containment. Secondary containment calculations for the container storage area and flammable materials storage shelter are provided in Appendix E.

3.4 PLANT OPERATIONS- POTENTIAL SPILL AND FIRE SOURCES AND CONTROL PROCEDURES

Employees must perform their duties in the safest, most efficient manner possible and the service center has been equipped to facilitate these activities. All employees receive training through an on-going Environmental, Health and Safety training program. More information on employee training can be found in Section 5.0.

Wherever possible, containers will be moved using a handcart, and pallets are typically moved using a forklift or pallet jack. Containers of spent solvent are added to a storage tank or placed in the drum storage area. Open drums of solvent must not be left unattended. Listed below are descriptions of situations, which can result in accidents, and the precautions taken to prevent their occurrences.

3.4.1 Potential Minor Spill Sources

The following is a list of activities that have the potential for a minor (when they can be remediated without assistance from a cleanup contractor) pollution incident:

a. **Emptying of containerized solvent into the dumpster/drum washer-** As the containers are emptied into the dumpster/drum washer, solvent can splash out. Employee training emphasizes the importance of taking care in emptying the drums. A secondary containment sump, from which free liquid can be pumped to the storage tank, underlies the return and fill station. The design will contain this type of spill. All accumulated liquids shall be removed on a daily basis.

b. **Filling of containers with solvent product**- A low-pressure hose with an automatic shut-off valve, similar to those used at automotive service stations, is used to fill the containers with clean solvent. Leaking fittings, damaged hoses or carelessness could lead to the discharge of solvent outside of the container. Manual emergency shut-off valves are installed on each hose, should the equipment not function properly. In addition, employee training emphasizes the importance of inspection, maintenance and reporting of conditions with pollution incident potential.

c. **Moving of containers-**When a container is moved, the potential exists for it to tip over. To minimize the potential for spillage of solvent, all containers must be maintained in an upright position and remain tightly covered while in storage or in transit.

d. **Delivery truck transfers-** The cargo should be secured in the route vehicle with straps before transport. Individual containers of waste can tip over or be dropped when being moved on or off the delivery truck. Transfers will be made using a lift-gate, handcart, or hoist, if necessary. If a spill does occur, the amount of waste in the containers is a quantity, which can be collected

with sorbent material. Any contaminated soil that results will be removed and transported to a properly permitted waste treatment or disposal facility for proper disposal.

3.4.2 Potential Major Spill Sources

The following activities have the potential for a major (one for which remedial action will require assistance) pollution incident:

a. **Over filling of storage tanks-**The storage tanks can be over filled with the resulting discharge of materials. The tanks are equipped with high level alarms, which are tested daily. Further, the tank volume is checked before pumping materials into the tank. This will prevent overfilling of the tanks.

b. **Leaking pipelines-**The pipelines and other equipment present a potential for leaks and resultant pollution. Regular inspection of the equipment and the inventory will detect any leaks.

3.4.3 Potential Fire Sources

The following is a list of fire prevention and minimization measures.

a. **Wastes and products are kept away from the ignitable sources-** Personnel must confine smoking and open flames to remote and/or designated areas, separate from any flammable materials. The return and fill area, container storage areas, and aboveground tanks are separated from the office area by fire doors or by distance to minimize the potential for fire to spread or injury to personnel.

b. **Ignitable wastes are handled so that they do not:**

1. **Become subject to extreme heat or pressure, fire or explosion, or a violent reaction-** The spent parts cleaner solvent and containerized wastes are stored in a tank or in containers, none of which are near sources of extreme heat, fire, potential explosion sources or subject to violent reactions. The tanks are vented and the drums kept at ambient temperature to minimize the potential for pressure build-up.

2. **Produce uncontrolled toxic mists, fumes, dust or gases in quantities sufficient to threaten human health-** The vapor pressure of parts cleaner solvent is low (mineral spirits is <1 mm Hg @ 68°F). Toxic mists, fumes, dust or gases will not form in quantities sufficient to threaten human health since strong oxidizers and reactive metals are not handled at this facility and the solvent vaporization will be minimal under normal working conditions.

3. **Produce uncontrolled fires or gases in quantities sufficient to pose a risk of fire or explosion**-see Section 3.4.4: Tank evaluation and repair plan.

4. **Damage the structural integrity of the Safety-Kleen facility**-the parts cleaner solvent and containerized wastes will not cause deterioration of the tank, drums or other structural components of the facility.

c. **Adequate aisle space is maintained** to allow the obstructed movement of personnel, fire protection equipment, and decontamination equipment to any area of the facility operation in an emergency.

d. **No smoking signs are posted** in areas where solvents are handled or stored.

e. **Fire extinguishers must be checked** once per week and tested by the fire extinguisher company once per year.

3.4.4 Tank Evaluation and Repair Plan

The waste stored in the permitted tanks at this facility are parts cleaner solvent and antifreeze, which are compatible with the carbon steel structures. Inspections will be performed each day. The tanks will be checked for leaks, corrosion, or any damage that might affect its integrity. If significant corrosion is noted on a tank, the tank will be removed or repaired. If the corrosion is significant and localized, the tank will immediately be taken out of service and repaired (e.g., a patch welded over the corroded area). Should the corrosion of the vessel be extensive or if the tank is found to be leaking, it will be immediately taken out of service and repaired in accordance with 40 CFR 264.196, or replaced. If the used parts washer solvent tank or used antifreeze tank are taken out of service permanently, Safety-Kleen will remove the tank in accordance with the closure plan (Section 6.0).

In addition to the daily inspection, an ultrasonic thickness test will be performed annually. The tank shell thickness will be checked, using ultrasound, and the tank will be checked for leaks, cracks, and wall thinning. If the shell is indicated as having thinned to a significant degree, an inspection of the interior will be performed to check for corrosion and erosion. Results of the latest thickness test results are included in Appendix E.

3.4.5 External Factors

The design of the facility is such that a harmful spill is highly unlikely to occur from most external factors. The storage tanks are accessible only to Safety-Kleen personnel and the pump switches are located inside the office building of the Service Center. The container storage area is also only accessible to Safety-Kleen personnel.

a. **Vandalism-** Only extreme vandalism could result in a solvent spill or fire. Responses to spills and fires are described in the contingency plan.

b. **Strikes-** A strike would not result in a solvent spill or fire.

c. **Power failure**-A power failure would not result in a spill or fire. Should a power failure occur, all activities that require electricity will cease.

d. **Flooding-** The elevation of the waste management units at the facility is above the projected 100-year flood plain: therefore; a 100-year flood will not affect waste storage activities at the facility.

e. **Storms or cold weather-** The solvent return and fill station is located in an enclosed climate controlled area to eliminate the possibility of rain or snow entering the drum washer/dumpster. No opportunity is foreseen to affect the facility with snow, cold weather or storm water. Extreme weather may force the facility to close or curtail operations.

3.5 INTERNAL AND EXTERNAL COMMUNICATIONS AND ALARM SYSTEM

Internal communication within the building and the main container warehouse is accomplished by voice or by using the telephone intercom paging system. The drivers of Safety-Kleen tanker trucks have citizen's band radios in their trucks as well as access to the building and its telephones. Telephones will be used to report a spill or a fire and to summon assistance from local and/or state emergency response agencies. Emergency response telephone numbers are posted by each facility telephone. Included in these phone numbers is the 24-hour Safety-Kleen Emergency Response Coordinator.

CONTINGENCY PLAN

ABSTRACT

PURPOSE: This plan describes the proper action to be taken by employees during an emergency.

RESPONSIBILITIES: The emergency coordinator or his alternates are responsible for implementing the plan during an emergency.

EMERGENCY COORDINATOR: The emergency coordinator and alternate emergency coordinator for this facility are designated Safety-Kleen employees who have been trained for these positions.

EMERGENCY NOTIFICATIONS:

Tazewell County Sheriff's Department:	309-346-4141 or 911
Cincinnati Township Fire Department:	309-348-3070 or 911
Pekin Police Department	309-346-3132 or 911
Pekin Memorial Hospital	309-347-1151
Safety-Kleen Systems Inc. Incident Notification System	800-468-1760
Illinois Emergency Management Agency (EMA)	217-782-7860
Qualified Emergency Response Contractor	800-468-1760
Tazewell County Local Emergency Planning Committee (LEPC)	309-477-2272
National Response Center	800-424-8802

4.0 CONTINGENCY PLAN

4.1 PURPOSE

The contingency plan describes the actions to be taken by each employee in the event of a spill, fire or other emergency. It includes the information necessary to address emergency situations efficiently and in such a manner as to prevent or minimize hazards to human health or the environment due to fire, explosion, or any other release of hazardous materials to the air, soil, surface water, or groundwater. The contingency plan is to be carried out immediately whenever there is a release of hazardous material, which could threaten human health or the environment.

4.2 EMERGENCY COORDINATOR RESPONSIBILITIES

The emergency coordinator is responsible for implementing the contingency plan during an emergency; however, all employees must be familiar with the procedures in this plan and are responsible for proper implementation of the plan should the emergency coordinator or his/her alternate be unavailable.

The emergency coordinator and his/her alternate are adequately trained to respond in the event of an emergency. The emergency coordinator and alternate emergency coordinator must be familiar with all aspects of this contingency plan, the operations and activities at the facility, the location and characteristics of materials handled, the location of all records within the facility and the facility layout. In addition, these coordinators have the authority to commit the resources necessary to carry out the contingency plan. Their home addresses and telephone numbers, as well as the office telephone number, are listed in Appendix G. Also listed in Appendix G are the typical functions of each employee during an emergency. At least one employee will be at the facility or on call to respond to an emergency situation at all times.

4.2.1 Responsibilities During An Emergency

Whenever there is an imminent or actual emergency situation, the emergency coordinator (or his/her alternate when the emergency coordinator is not available) must immediately:

a. Activate the internal facility communications system to notify all facility personnel,

b. Notify appropriate state or local agencies, and

c. Notify Safety-Kleen's emergency response coordinators using the 24-hour telephone number (currently 800-468-1760).

Whenever there is a release, fire, or explosion, the emergency coordinator must immediately try to identify the character, exact source, amount, and extent of any contamination. Because of the limited number of materials being handled at the facility, he/she may do this by observation or by review of facility records. If necessary, outside laboratories may be contacted to perform chemical analysis.

Concurrently, the emergency coordinator must assess possible hazards to human health or the environment that may result from the release, fire, or explosion. This assessment must consider both direct and indirect effects of the release, fire, or explosion (e.g., the effects of any toxic, irritating, or asphyxiating gases that may be generated or the effects of any hazardous run-off). The emergency coordinator will also evaluate whether a release could potentially threaten offsite property or personnel.

During an emergency, the emergency coordinator must take all measures necessary to ensure that fires, explosions, and releases do not occur, recur, or spread to other areas of the facility. These measures must include, where applicable, stopping processes and operations, collecting and containing released waste, and removing or isolating containers.

4.2.2 Remedial Action Responsibilities

If the environment has been contaminated or there is a potential for contamination as a result of the fire, explosion, or spill, the emergency coordinator must immediately contact the Illinois Emergency Management Agency and the Safety-Kleen Emergency Response Coordinators to report the incident. The proper treatment, storage and/or disposal of the recovered waste, contaminated soil or surface water that results must be arranged by Safety-Kleen and carried out as expeditiously as possible.

The emergency coordinator or his/her alternate must ensure that, in the affected area(s) of the facility:

a. No substance that may be incompatible with the released material is brought on site until cleanup and procedures are completed, and

b. All emergency equipment listed in the contingency plan is cleaned and fit for its intended use before operations are resumed.

4.2.3 Reporting Responsibilities

If the emergency coordinator determines that the facility has had a release that could threaten human health or the environment, the coordinator must report those findings as follows:

a. If the assessment indicates the evacuation of local areas may be advisable, the coordinator must immediately notify appropriate authorities, and

b. The coordinator must immediately notify the Illinois Emergency Management Agency and the Safety-Kleen Emergency Response Coordinators. This notification shall include the following:

(1) Name and telephone number of notifier,
(2) Name and address of facility,
(3) Time and type of incident (e.g., release, fire),
(4) Name and quantity of material(s) involved, to the extent known,
(5) The extent of injuries, if any, and
(6) The possible hazards to human health, or the environment outside the facility.

Safety-Kleen will notify the appropriate state and local authorities that the facility is in compliance with Section 4.2.2 before operations are resumed in the affected area(s) of the facility.

The emergency coordinator must document the time, date, and details of any incident that requires the implementation of the contingency plan. Within 15 days of the incident, Safety-Kleen will submit a written report on the incident to the Illinois Emergency Management Agency and the Illinois EPA's Division of Land Pollution Control Planning and Reporting Section. The report must include:

a. Name, address, and telephone number of the owner or operator,

b. Name, address, and telephone number the facility,

c. Date, time, and type of incident (e.g., fire, explosion),

d. Name and quantity of material(s) involved,

e. The extent of injuries, if any,

f. An assessment of actual or potential hazards to human health or the environment, where this is applicable, and

g. Estimated quantity and disposition of recovered material that results from the incident.

4.2.4 Chain Of Command

Based on the emergency response procedures described above, the chain of command during an emergency is as follows:

a. The person who discovers/causes the spill reports to the emergency coordinator.

b. The emergency coordinator contacts the Illinois Emergency Management Agency and the Safety-Kleen Emergency Response Coordinators.

4.2.5 Government Agencies and Local Authorities To Be Notified

During an emergency, the following government agencies and local authorities must be contacted:

AGENCY OR AUTHORITY	RATIONALE
Sheriff's Department	Notify if there is immediate danger to human health or for evacuation. Media: soils, surface waters, sewers, and air
Police Department	Notify if there is immediate danger to human health or for evacuation. Media: soils, surface waters, sewers, and air.
Fire Department	Notify if there is fire, uncontrolled spill, or air release or other immediate danger. Media: soils, surface waters, and air.
County Emergency Management Agency (LEPC)	Notify if there is immediate danger to human health and potential need for evacuation. Media: Air and surface waters.
Illinois EMA	Notify if there is immediate danger to human health or environment. Media: soils, surface waters, sewers and air.
City Sewer Department	Notify if there is hazardous uncontrolled spill to surface waters or sewers. Media: Sewers or surface water.
Hospital	Notify if there are injuries.
Qualified Emergency Response Contractor	Notify to assist with remedial action to affected media after a release.

4.3 EMERGENCY RESPONSE PROCEDURES

Response actions to be taken in specific emergency situations are described in the sections that follow. Employees must assess the possible hazards to human health or the environment resulting from a release or fire by visually inspecting the area, reviewing material safety data sheets for the material released, estimating the extent of the release, and identifying the media to which it was released (e.g., soil, water and/or air).

4.3.1 Minor Spills

If a spill should occur while pouring spent solvent into a drum washer/dumpster or filling drums with solvent product at the return and fill station, and is contained in the secondary containment at the base of the return and fill station, it will be cleaned up using appropriate equipment (e.g., a wet/dry vacuum, absorbent materials, etc.). Remedial action will not be necessary for this type of spill. Should the spill occur outside the containment, different actions must be taken depending on whether the spill occurs on a paved or on paved area:

a. If the material spills on a paved area, it must be collected with absorbent material. Should water be present when a spill occurs, all of the liquid will be treated as hazardous waste, unless otherwise determined, and pumped into the used solvent storage tank. All storm drains within 50 feet of the spill will be surrounded with sorbent to prevent contamination.

b. If the material spills on an unpaved area, the free liquid must be collected with absorbent material. The sorbent material and any contaminated soil must be collected, drummed, and shipped to a properly permitted disposal facility. Should water be present when a spill occurs, all of the liquid will be treated as hazardous waste, unless otherwise determined, and pumped into the used solvent storage tank. All storm sewer out-falls within 50 feet of the spill will be surrounded with sorbent to prevent contamination. If the spilled material does contaminate the storm sewer, it will be bermed off to block the flow of contaminated materials.

If a spill occurs while moving or delivering drums outside of the warehouse, the response actions described above must be followed. Damaged or leaking containers must be over-packed or their contents transferred to containers of good integrity. Spills inside the building will be prevented from contaminating the environment by the concrete floor, containment trenches, and the secondary containment curbing. In the event of the spill indoors, the doors should be opened to improve the ventilation in a confined area. If solvent is spilled in a non-explosion rated area or is flowing in such, insure that all sources of ignition (e.g., thermostats or light switches) are left in the same position (either on or off) as at the time of the spill. Following instructions of the appropriate material safety data sheet, the worker will enter the area wearing the required personal protective

equipment (e.g. gloves, apron, safety glasses, and/or respirator), collect the liquid, containerize it, and return it to storage.

Cleanups are completed only when the workers have cleaned themselves and emergency equipment with soap and water. If the spill is of a reportable quantity, the cleanliness of the emergency equipment must be confirmed in Safety-Kleen's written report to the Illinois Emergency Management Agency. All minor spills must be reported to the Illinois Emergency Management Agency (if the spill is of a reportable quantity) and the EHS Department.

4.3.2 Major Spills

Any spill which cannot be completely remediated using the methods described in "a" and "b" of Section 4.3.1 is a major spill. A major spill is usually the result of a vehicular accident, tank over-filling, equipment failure or a fire. Spilled material, which escapes collection, can contaminate soil, surface water, groundwater, sanitary sewer systems, and storm sewer systems. Emergency response to this type of spill should be as follows:

a. Assist any injured people.

b. Stop the flow of spilled materials, if possible.

c. Retain, contain or slow the flow of the spilled material if it cannot be stopped. Protect or berm nearby drains or out-falls to storm sewers and surface water.

d. Immediately call the local fire and police departments and report to the emergency coordinator, the Illinois Emergency Management Agency and Safety-Kleen's Emergency Response Coordinators.

e. Immediately deploy the appropriate emergency response equipment and recover the spill to the extent possible to reduce property and environmental damage. Start recovery operations immediately.

f. Contact a qualified spill clean-up contractor, if required, and request clean-up assistance.

The emergency coordinator shall report any incident as soon as possible to the Illinois Emergency Management Agency, 217-782-7860 (24-hour number) and Safety-Kleen's Emergency Response Coordinators using the 24-hour telephone number: 800-468-1760. If required, the emergency coordinator shall also report the incident to the National Response Center (telephone number: 800-424-8802) and the Tazewell County LEPC at 309-477-2272. Upon receiving notification, Safety-Kleen's Emergency Response Coordinators will also complete an internal summary document. This

summary document is maintained at the facility and is also provided to the Environment, Health and Safety-Department.

Spills must be controlled to the fullest extent possible. Personnel must not take health or safety risks; if there's any doubt as to whether a particular action is unsafe, it must be avoided. The source of a release must be stopped by turning off pumps, closing valves, righting tipped drums or taking other appropriate actions. If the flow can not be stopped, a berm should be formed by shoveling dirt or sorbent clay around the free liquid to hold it in one place or at least direct it to the area where it will do the least amount of damage (e.g., the secondary containment area or the tanker truck loading/unloading area).

The free liquid can be collected from the ground or affected surface water using a wet/dry vacuum or hand pump and sorbent clay and towels. The liquids must be drawn and/or added to a tank of good integrity. The affected area must be cleaned and decontaminated. If it is a paved or metal surface, this can be done using a detergent solution. If large amounts of soil or the groundwater are, or may be contaminated, a work plan to perform an extent of contamination study and determine appropriate remediation activities must be developed and approved by the Illinois Emergency Management Agency. A plan to verify that remediation has been effective must also be developed and approved by the Illinois Emergency Management Agency.

The person reporting a spill should be prepared to report the information listed in Section 4.2.3.b. The person reporting should also describe the materials spilled and if possible, an estimate of the quantity spilled, the containment status, and specify any equipment needed.

Contaminated material resulting from remedial actions for major spills will be disposed of at a properly permitted treatment or disposal facility.

4.3.3 Fire Control Procedures

If a fire occurs, personnel must act quickly with the fire extinguisher to put out the fire before it spreads. It is Safety-Kleen's policy that personnel only respond to incipient fires; those that can be extinguished using a fire extinguisher. A fire that cannot be brought under control immediately, or which has the potential to become uncontrollable warrants implementation of the contingency plan.

Vapors of mineral spirits exposed to spark or open flame may flash at temperatures over 105°F. A mineral spirits fire can best be extinguished with foam. If foam is not available, sweeping the fire with water fog can cool it, directing the water spray to push the flames into a confined area, if possible. The flame should not be extinguished until the flow of the solvent has been stopped. Attention should then be directed immediately to extinguishing the flame.

When and if quantities of water are used to control a solvent fire there is a potential for the flow of this contaminated water to be off site. If the emergency coordinator determines that it is safe to work in the area (no inhalation hazards exist), other responders will create a berm of soil or sorbent material along the facility border to prevent runoff from the facility.

Dry cleaning wastes are not flammable, but can produce phosgene gas and hydrochloric acid gas at very high temperatures (about 1200°F). The potential for these materials reaching a decomposition state is minimal, however, Safety-Kleen personnel and local authorities must be aware of the proper response, should a fire affect areas where these wastes are stored. Proper response actions are:

a. Isolate the hazard area and deny entry to unauthorized personnel.

b. Stay upwind; keep out of low areas.

c. Ventilate closed spaces before entering them.

d. Wear positive pressure breathing apparatus and protective clothing.

e. Evacuate a 600-foot radius area endangered by a release of gas.

A fire in the container storage area can best be extinguished by foam, water fog, or water spray. Parts cleaner solvent and immersion cleaner can generate carbon monoxide and other poisonous gases when exposed to heat. Therefore, it is important to wear positive pressure breathing apparatus and full protective clothing in the affected area. If a fire in or near the areas where these wastes are stored occurs:

a. Isolate the area and deny entry to unauthorized personnel.

b. Stay upwind and keep out of low areas.

c. Wear protective clothing and self-contained breathing apparatus.

A dry chemical, or carbon dioxide fire extinguisher, or foam will best extinguish the fire. Cool the containers with water until well after the fire has been extinguished.

Explosions, unstable structures and other hazardous conditions may result in the spread of fire at the facility. Therefore, the site must not be re-entered until the responding fire department has determined that it is safe to do so. Actions must be taken to ensure that fires, explosions or releases do not occur or reoccur. These include removing the source of the problem, repairing or remediating the source of the problem, cooling areas subject to fires and explosions and replacing faulty equipment.

4.3.4 Monitoring Requirements

During an emergency, the emergency coordinator will visually monitor affected parts of the facility for leaks, pressure buildup, gas generation, or ruptures as appropriate. The monitoring will be performed during and after an emergency only if it can be done with no risk to human health or safety.

The Pekin Service Center conducts bulking operations during transfer of used parts washer solvent to the storage tank. If a fire, explosion, or major spill occurs that would require the bulking operation to be stopped, there will be no danger of a buildup of pressure, ruptures, or gas generation resulting from the stoppage. Emergency shutdown of transferring activities (from the return and fill dock to the tank for waste solvent, and from product storage tanks to the return and fill dock) will occur instantaneously as this operation is not a continuous process, but rather is a manual function. The process must be manned in order to operate. Each bulk storage tank is equipped with a pressure/ vacuum vent that operates at two ounces of pressure and one ounce of vacuum. Also, the manway at the top of each tank is provided with long bolts, partially threaded, to allow for emergency venting of the tank in the event of an emergency, as prescribed by the National Fire Protection Association. The tank construction minimizes the possibility of excess pressure buildup in the tank.

4.4 EVACUATION PLAN

Exits are clearly marked in the warehouse and office area and employees are trained to be aware of all potential escape routes. The signal for evacuation is either a verbal or loudspeaker announcement describing the hazard and indicating the need for evacuation. An evacuation is necessary when a release, fire and/or explosion, which has the potential to generate irritating vapors or deplete the available oxygen, has occurred or has the potential to occur. In addition, a release, fire or explosion, which has the potential to injure personnel through physical contact or by damaging structures, will necessitate an evacuation. (It should be noted that the solvents handled by Safety-Kleen are skin and eye irritants at levels below the OSHA airborne concentration limits.)

When an uncontrolled release, fire or explosion has occurred, all personnel are to be evacuated from the area and assemble across VFW Road to assure that all personnel are accounted for and out of the hazardous area. The fire department must be notified at the time of evacuation either from a safe on-site building or from a neighboring facility.

4.5 ARRANGEMENT WITH EMERGENCY RESPONSE AGENCIES

A list of current, potential emergency response contractors is maintained by Safety-Kleen's Emergency Response Coordinators. These contractors will be contacted to provide emergency assistance during a release and/or clean up.

Copies of the current contingency plans are made available to the applicable emergency response agencies. It is requested that each organization keep the contingency plan on file and notify Safety-Kleen if they refuse to enter into an agreement or cannot comply with the procedures outlined within the plan. Documentation of either the agreement or refusal is kept on file at the facility. Material Safety Data Sheets for the on-site materials are available to facility personnel, along with the contingency plan for the purpose of alerting local hospitals of the type of ailments or injuries that may be encountered in a release or fire at the facility. Example material safety data sheets for some of the most common materials handled or stored at the facility are included in Appendix G.

4.6 IMPLEMENTATION SCHEDULE

Any discrepancies or deficiencies found during the routine inspection must be corrected expeditiously to insure that the problem does not lead to an environmental or human health hazard. Where a hazard is imminent or accident has already occurred, remedial action must be taken immediately. The branch general manager has the overall responsibility for correcting any discrepancies found during a routine inspection, and will consult with the corporate environmental and engineering staffs to design an implementation schedule for remedial action.

4.7 AVAILABILITY AND REVISION OF THE CONTINGENCY PLAN

This plan and all revisions to the plan are kept at the facility and regularly updated throughout the operating life of the facility. If the revision of the contingency plan requires a permit modification, the modification will be performed pursuant to 40 CFR 270.42 and 35 Ill. Adm. Code 703. Appendix A (B)(6). Copies of this document are provided to local authorities and organizations listed on the emergency information sheet (Appendix G) and they may be called upon to provide emergency services. In addition, this plan and all revisions to the plan are made readily available to employees working at the facility.

The plan is reviewed and updated, if necessary, whenever:

a. The facility permit is modified to allow new process wastes to be stored, or applicable regulations are revised,

b. The list or location of emergency equipment changes,

c. The facility changes in its design, construction, operation maintenance, or other circumstances in a way that:
   (1) Increases the potential for fires, explosions, or releases of hazardous constituents, or
   (2) Changes the response necessary in an emergency,

d. The names, addresses, or phone numbers of emergency coordinators change,

e. The employee assigned to each emergency task changes, or

f. The plan fails when implemented in an emergency.

PERSONNEL TRAINING

ABSTRACT

OBJECTIVE: The purpose of training is to familiarize employees with environmental regulations, records and emergency procedures so they can perform their jobs in the safest and most efficient manner possible. The program is designed to ensure that facility personnel are able to respond effectively to emergencies by familiarizing them with emergency procedures, emergency equipment and emergency systems.

TIME OF TRAINING

JOB TITLE	Prior To Starting Work	On the Job	Annually	When Regulations or Procedures Change
Branch General Mgr.	X	X	X	X
Branch Secretary	X	X	X	X
Sales/Service Representative	X	X	X	X
Material Handler	X	X	X	X

5.0 PERSONNEL TRAINING

5.1 OUTLINE OF TRAINING PROGRAM

Each employee is trained to operate and maintain the facility safely, and to understand hazards unique to his/her job assignment. New branch general managers must complete an introductory training program before starting a job, with annual review and update thereafter. Appendix H contains example job descriptions, example training outlines, and example training record forms.

5.2 ORGANIZATION STRUCTURE AND JOB DESCRIPTIONS

Environmental compliance and training of branch employees is the responsibility of the branch general manager. The Training Department, in turn, provides a training program to be executed annually. The training program is directed by personnel trained in hazardous waste management procedures and includes instruction on hazardous waste management for facility personnel in accordance with 40 CFR 264.16(a)(2). Example job descriptions for branch personnel are in Appendix H. Any updates to the current forms will be maintained in the individual training files at the facility.

5.2.1 Branch General Manager

The branch general manager is responsible for the business and environmental operations at the service center. The sales/service personnel, secretaries and material handlers report to the branch general manager. The branch general manager or a qualified designee provides the training and materials necessary for the branch employees to execute their duties. With respect to environmental compliance, the branch general manager must:

a. Keep the service center clean and orderly,

b. Execute or designate an employee to execute the daily inspection, keep the written log and remediate any problems,

c. Know the potential hazards of the material and wastes handled onsite,

d. Identify potential spill and fire sources and be able to execute the contingency plan,

e. Inform all employees of their environmental responsibilities,

f. Act in accordance with the contingency plan and notify the proper authorities during an emergency, remediate the situation to the best of his/her abilities, and submit necessary reports to the corporate office, and

g. Maintain all environmental records (such as manifests, training records and spill reports) on file at the facility.

5.2.2 Environment, Health and Safety Department

Safety–Kleen's Environment, Health and Safety (EHS) Department operates out of regional offices, and the corporate office. The EHS Department has personnel on staff who are responsible for training, permits, and compliance issues for the service centers in a given geographic area. The EHS Department must:

a. Execute training of personnel in accordance with environmental regulations and corporate policy,

b. Notify the proper authorities, oversee remedial actions, and submit required reports after an emergency situation has occurred,

c. Assure that environmental permits are submitted and updated as required,

d. Manage any environmental compliance issues which exceed the resources available at the service center level, and

e. Participate in training of new branch general managers.

5.3 DESCRIPTION OF THE TRAINING PROGRAM

Employee training is accomplished using classroom, videotape, written, and on-the-job methods. The Training Department prepares a training program for employees and service center personnel provide documentation that the program has been executed.

An employee is trained prior to start or as soon as he/she begins working, (depending on his/her position) and annually thereafter. The EHS Department ensures that the branch general manager or his/her designate has received adequate training in order to train all branch personnel. Appendix H contains an example training outline, which demonstrates that employees are trained in hazardous waste management procedures. Training is given both initially and annually to employees who manage or handle hazardous waste.

5.3.1 Training of New Branch General Managers

New branch general managers are trained before they begin their new positions. This training is implemented using both in situ and classroom modes. While being trained, a new manager reviews all environmental records and learns the record keeping requirements. These records include manifests, personnel records, training records, facility inspection records, and spill reports.

The training culminates in additional training at the branch general manager's facility, at least one day of which is devoted to environmental training at the direction of an environmental professional. The training consists of an introduction to environmental law and a review of the Part B Permit, including all aspects of the Waste Analysis Plan, Preparedness and Prevention Plan, Contingency Plan, Training Plan, and Closure Plan. Appendix H contains an example outline of the training program. Additional time is spent reviewing past environmental compliance at the facility and regulations unique to the state are discussed as well.

5.3.2 Training of New Branch Secretaries

Branch secretaries are trained in the proper record keeping procedures as soon as they began working for Safety-Kleen. They may be responsible for preparing the documentation, and they must check it for accuracy and completeness and then process or file it as required. Additional training is overseen by the branch general manager or his/her designee and is completed within six months of starting. The training includes some of the items listed in the Example Training Plan that may be applicable to the secretary's job function. In addition, the contingency plan must be reviewed with the branch general manager within the first two weeks of the secretary starting work.

5.3.3 Training of New Sales/Service Representatives

New sales/service representatives are trained on-site during which time they are introduced to manifests, facility inspection records and training records. Depending on staffing, sales/service representatives may be called on to assist with return and fill operations. A sales/service representative may also be trained as a designee for performing the facility inspection. Additional training may be in the form of videotape presentations. A review of the contingency plan must also be completed with the branch general manager before the sales/service representative formally begins his/her new position and annually thereafter. Items such as those listed in the Example Training Plan must be explained within six months of starting.

5.3.4 Training of New Material Handlers

The material handler is trained to maintain the service center and assist the other

branch employees in their tasks. He/she may be a designee to perform the facility inspection. Additional training may be in the form of videotape presentations. A review of the contingency plan must also be completed with the branch general manager before the material handler formally begins his/her new position and annually thereafter. Items such as those listed in the Example Training Plan must be explained within six months of starting.

5.3.5 Annual Training

On an annual basis, employees are trained using a program prepared and updated annually by the EHS Department. It includes updates on environmental regulations, and in-depth review of the contingency plan and a review of RCRA inspection criteria.

All service center employees will review annually training items such as those listed in the Example Training Plan. This review may be in the form of videotapes and classroom instruction, and will include a review, and discussion of the storage facility permit application. In addition, periodic memoranda on changes in environmental regulations/company policy are issued by the EHS Department, and must be read and discussed by service center personnel.

5.4 TRAINING RECORDS

All training must be documented. The records of current employees will be kept on file at the facility until closure. Records for former employees will be kept for at least three years from the date the employee last worked at the facility. If an employee transfers to another Safety-Kleen facility location, the training records will be transferred with the employee. Training documentation will include, at a minimum, the required information described in 40 CFR 264.16(d).

CLOSURE PLAN

ABSTRACT

LOCATION ADDRESS: Safety-Kleen Systems, Inc.(5-136-01)
14249 VFW Road
Pekin, Illinois 61554
US EPA ID number: ILD 093862811

WASTE UNITS TO UNDERGO CLOSURE:

a. **Storage tank systems with associated piping and secondary containment-** one 20,000-gallon storage tank for used parts washer solvent and one 10,000-gallon storage tank for spent antifreeze.

b. **Container storage area in warehouse-** an area with a storage capacity of 10,560 gallons, based on the maximum permitted capacity.

c. **Return and fill station-**the location of this area is adjacent to the container storage area and is shown on the site plan. It contains a drum washer/dumpster unit with a maximum sump capacity of 40 gallons and design capacity of 165 gallons.

d. **Flammable materials storage shelter-**the location of this structure is shown on the site plan. It has a storage capacity of 2,184 gallons.

The above volumes are the maximum amounts which will be stored at this facility.

6.0 CLOSURE PLAN

6.1 PURPOSE

The Pekin Service Center operates as a storage facility for hazardous wastes, and Safety-Kleen believes it is required to be closed in accordance with the closure requirements of 40 CFR 264.112 and 35 Ill. Adm. Code 724, Subpart G. The closure plan abstract on the preceding page includes the maximum inventory of wastes onsite at closure. Closure of the facility will be carried out in accordance with the steps outlined in this plan. Appendix I contains an estimated schedule and cost for the completion of closure. Safety-Kleen will remove or eliminate all hazardous wastes and residuals from the facility. This will eliminate the need for post-closure maintenance, potential post-closure releases of hazardous wastes, their decomposition products, constituents and leachate, and will eliminate releases of contaminated rainfall to the air, groundwater, surface water and soil.

At this time, Safety-Kleen does not anticipate conducting partial closure on any of the hazardous waste storage units that will be active at the Pekin Service Center. If necessary, partial closure of the tank system would involve the procedures described in Section 6.2. Partial closure of the container storage area would involve the procedures described in Section 6.3. Partial closure of the return and fill station would involve procedures described in Section 6.4, and partial closure of the flammable storage shelter would involve the procedures described in Section 6.5. Sections 6.1 and 6.6 would apply to partial closures as well as to a final closure.

6.2 ABOVEGROUND STORAGE TANKS AND ASSOCIATED PIPING

Safety-Kleen will undertake a number of activities to safely clean and decommission the 20,000-gallon aboveground waste storage tank, the 10,000-gallon aboveground spent antifreeze tank, and associated piping. The significant tasks include removing waste materials and providing access to the tank interior, removing residual waste, and cleaning the tank interior, and may include physically removing the tank structures and subsequently back filling and re-grading the area.

6.2.1 Removal of Waste Material and Opening The Tank

Safety-Kleen will complete the following activities to remove the contents of the tank and provide access to the interior of the tank:

a. Pump out the waste material contents of the tank using a pump, vacuum truck, or similar equipment. Transport the waste to a properly permitted treatment and disposal facility.

b. Provide access to the tank using the manway. Depending on the type of opening and the condition of the equipment, a variety of tools may be used to open the manway. Care must be exercised to minimize spark generation when working on the tank.

c. Once the tank has been opened, air quality within the tank will be monitored to determine if positive ventilation is required. The tank will then be inspected to determine the approximate quantity and physical conditions of any remaining waste material. Prior to entering the tank, personnel should have supplied air for respiratory protection and protective clothing.

6.2.2 Removal of Residual Waste and Cleaning of the Tank

Safety-Kleen will complete the following activities to safely remove the residual waste and clean the tank interior:

a. The method used to remove the residual waste material from the tank will depend on the physical properties and quantities of that material. Prior to any person entering the tank, an effort will be made to remove as much liquid and sediment as possible.

b. After removing the majority of the material from the tank, a high-pressure wash system and a detergent solution will be used to rinse residual material from the walls, roof, and floor of the tank. The evacuated material and the rinse solution will be collected, pumped into a tanker truck or containers, and shipped to properly permitted treatment and disposal facility. The quantity of wash fluid used will be kept to a minimum in order to limit the amount of waste generated. If the tank is to remain onsite following closure, the effectiveness of the cleaning will be assessed by collecting a rinsate sample from the tank. The rinsate sample will be analyzed for volatile organic compounds and semi-volatile organic compounds corresponding to the waste codes handled in the tank and in accordance with EPA methods listed in SW-846. If the tank will be cut up and scrapped at closure, a rinsate sample will not be required.

c. The storage tank is considered a confined space (a space having a limited means of egress in which poisonous gases or flammable vapors might accumulate or oxygen deficiency might occur). Confined space entry will be performed by appropriately trained personnel. Confined space entry procedures will be in accordance with applicable regulations (29 CFR Part 1910.146).

6.2.3 Removal of Tank

After the tank interior has been cleaned, the tank and associated structures will be removed and if necessary, the area will be re-graded. Alternatively, Safety-Kleen may elect to re-use the tank system in place. If the tank system is to remain in place then only activities a-d will apply:

a. Disconnect and decontaminate all appurtenant piping and pumping equipment. Decontamination will involve high pressure washing with a detergent solution.

b. Collect, analyze, and dispose of any rinsate as described under Section 6.2.2b above.

c. Inspect the concrete secondary containment structure for any significant unsealed fully penetrating cracks or gaps, which may have allowed a release to the subsurface to have occurred. The inspection will be conducted by an independent professional engineer licensed in Illinois. If unsealed fully penetrating cracks or gaps are observed, their length and orientation will be recorded by the inspecting engineer.

d. Soil samples will be collected beneath unsealed fully penetrating cracks or gaps in accordance with the procedures described in Appendix I, Exhibit I-2a. Soil samples will be analyzed for volatile organic compounds, semi-volatile organic compounds, and metals corresponding to the waste codes managed in the tank using appropriate analytical methods (SW-846).

e. Remove the tank for reuse at another location or cut up and remove the tank, along with appurtenant piping and pumps. Cut up material will be scrapped or disposed of in a properly permitted landfill.

f. Clean, demolish, and remove the concrete dike (concrete slab and walls) and slab that provides secondary containment for the tank. The concrete will be recycled or disposed of in a properly permitted non-RCRA landfill.

g. Alternatively, the tank farm containment area may be left in place following closure. If so, a rinsate sample will be collected to verify the completeness of the decontamination. The rinsate sample will be analyzed as described in Section 6.2.2c.

6.3 CONTAINER STORAGE AREA

The container storage area is used for the storage of drums of used immersion cleaner, dry cleaning waste, and dumpster/drum washer sediment, paint related waste, and FRS waste. At closure, drummed waste will be removed and transported to a

reclaimer after proper packaging, labeling and manifesting. The contents of the drums will be reclaimed and the drums will be cleaned for reuse or recycled.

The concrete floor will be cleaned with a high-pressure wash and detergent. To confirm the effectiveness of cleaning, a rinsate sample will be collected and analyzed as described in Section 6.2.2(b). The secondary containment structure will be inspected as described in Section 6.2.3(c). If required, soil samples will be collected as described in Section 6.2.3(d).

6.4 SOLVENT RETURN AND FILL STATION

The return and fill station is used to collect and return the used parts washer solvent to the waste storage tank. At closure, the sediment in the drum washers/dumpster will be removed and drummed, labeled, manifested and transported off-site for proper treatment and disposal at a Safety-Kleen recycling center or permitted treatment and disposal facility.

The drum washers/dumpster, piping, and dock area will be thoroughly cleaned with a high-pressure wash and detergent solution. Following the final rinse, a rinsate sample will be collected and analyzed as described in Section 6.2.2(b). The components of the return/fill station may be reused by Safety-Kleen or scrapped following the decontamination procedures.

The concrete floor will be cleaned with a high-pressure wash and detergent. To confirm the effectiveness of cleaning, a rinsate sample will be collected and analyzed as described in Section 6.2.2(b). The secondary containment structure will be inspected as described in Section 6.2.3(c). If required, soil samples will be collected as described in Section 6.2.3(d).

6.5 FLAMMABLE MATERIALS STORAGE SHELTER

This metal shelter is used for the storage of containerized flammable wastes. At closure, drummed waste will be removed and transported to a reclaimer after proper packaging, labeling and manifesting. The contents of the drums will be reclaimed and the drums will be cleaned for reuse or recycled.

The metal shelter and secondary containment will be thoroughly cleaned with a high-pressure wash and detergent solution. Following the final rinse, a rinsate sample will be collected and analyzed as described in section 6.2.2(b). The clean structure may be reused by Safety-Kleen or scrapped.

6.6 DECONTAMINATION OF CLEANUP EQUIPMENT

Cleanup equipment will be washed with a detergent solution and the wash water will be pumped into a tanker truck, portable tank or drums which is (are) designated for accumulation and storage of this waste. The rinsate will be shipped off-site for proper disposal. Small equipment (e.g., box, rags, shovels, etc.) and residue will be drummed and disposed in accordance with applicable regulations.

6.7 CLOSURE CRITERIA

To verify completeness of decontamination, rinsate samples will be compared to appropriate cleanup levels (e.g., Illinois (TACO) Tier I standards). If soil sampling and analysis are determined to be necessary, the results will also be compared to appropriate risk-based levels. Site-specific cleanup levels may also be established using appropriate procedures. If the rinsate analytical results exceed appropriate levels, the units will be re-washed and confirmatory samples re-collected. If the soil analytical results exceed appropriate risk-based standards, Safety-Kleen will submit a remedial action plan or closure plan amendment to IEPA for approval. The closure plan amendment will detail procedures for determining the nature and extent of potential impacts, and evaluate potential appropriate remedial actions, if determined to be necessary.

6.8 FACILITY CLOSURE SCHEDULE AND CERTIFICATION

Within 90 days of receiving the final volume of hazardous wastes, Safety-Kleen will remove all hazardous wastes from the site in accordance with the approved closure plan. The Illinois Environmental Protection Agency may approve a longer period if Safety-Kleen demonstrates that the activities required to comply with this paragraph, of necessity, take longer than 90 days to complete or the following requirements are met:

a. The facility has the capacity to receive additional waste,

b. There is a likelihood that personnel other than Safety-Kleen will recommence operation of this site, and/or,

c. Closure of the facility is incompatible with continued operation of the site. In this case, Safety-Kleen will take all steps necessary to prevent threats to human health and the environment.

Safety-Kleen will complete closure activities in accordance with the approved closure plan and within 180 days after receiving the final volume of wastes. The Illinois Environmental Protection Agency may approve a longer period if Safety-Kleen demonstrates that an extension is necessary to achieve closure.

When closure is completed, Safety-Kleen shall submit to the Illinois Environmental Protection Agency certification, both by the operator and by an independent registered professional engineer, that the facility has been closed in accordance with the approved closure plan.

6.9 POST-CLOSURE PLAN

As discussed above, Safety-Kleen will remove all hazardous waste and residuals from the Pekin Service Center during closure. Thus, a post-closure plan is not required at this time.

6.10 NOTICE IN DEED AND CERTIFICATION

Safety-Kleen is the owner of the property on which the Pekin Service Center is located. The facility does not have any hazardous waste disposal units that would potentially be closed as disposal units. However, at the request of IEPA, Safety-Kleen previously prepared a notice indicating that the facility property has been used for hazardous waste management activities. A copy of this notice was previously recorded with the Tazewell County Recorder of Deeds and is included as Exhibit I-5 in Appendix I.

6.11 CLOSURE COST ESTIMATE

Appendix I, Exhibit I-2 contains a cost estimate for closure of the Pekin Service Center. The cost estimate includes the estimated cost for closing permitted storage units in accordance with the procedures described in this closure plan.

6.12 FINANCIAL ASSURANCE MECHANISM FOR CLOSURE

Safety-Kleen provides financial assurance for closure of the Pekin Service Center. Appendix I, Exhibit I-3 contains the current certificate of insurance which is amended annually to reflect the annual inflation increase by using the implicit price deflator as published by the U.S. Department of Commerce. The annual updates are maintained on file at the facility.

6.13 POST-CLOSURE COST ESTIMATE

Safety-Kleen will remove all hazardous wastes and residuals from the Pekin Service Center during closure. Thus, a post-closure cost estimate is not required at this time.

6.14 FINANCIAL ASSURANCE MECHANISM FOR POST-CLOSURE

As discussed above, Safety-Kleen will remove all hazardous wastes and residuals from Pekin Service Center during closure. Thus, the financial assurance mechanism for post-closure is not required at this time.

6.15 LIABILITY REQUIREMENTS

As the owner and operator of a hazardous waste storage facility, Safety-Kleen is required and does maintain liability insurance coverage for the Pekin Service Center.

6.15.1 Coverage for Sudden Accidental Occurrences

Safety-Kleen maintains liability insurance coverage for sudden accidental releases from this facility. Appendix I, Exhibit I-4 contains a copy of the "Hazardous Waste Facility Certificate of Liability Insurance" for Safety-Kleen's current policy.

6.15.2 Coverage For Non-sudden Accidental Occurrences

The Pekin Service Center does not include any surface impoundments, landfills, land treatment facilities, or disposal units. Thus, Safety-Kleen is not required to maintain insurance coverage for non-sudden accidental occurrences.

7.0 MANAGEMENT OF WASTE IN CONTAINERS

7.1 DESCRIPTION OF WASTES TO BE STORED

The container storage area is used for the storage of permitted wastes described in Section 2.0. The area is also used to store Fluid Recovery Service (FRS) waste on a 10-day transfer basis. The permitted waste for storage and the transfer (10-day) waste are segregated at all times. The onsite metal shelter is used to store excess permitted flammable and non-flammable wastes.

Wastes stored in the container storage areas are not mixed while on site and different wastes are segregated in containers, which are labeled as to their contents. Proper hazardous waste labels are affixed to containers at all times. Hazardous waste labels must include the following wording as well as the generator's name and address and the manifest document number: "Hazardous Waste-Federal Law Prohibits Improper Disposal. If Found, Contact The Nearest Police Or Public Safety Authority Or The US Environmental Protection Agency." In addition, it must include the EPA waste codes for the waste, the accumulation start date and the generator's EPA ID number (if required).

7.2 SECONDARY CONTAINMENT STRUCTURES

The container storage area has secondary containment in the form of steel reinforced concrete with curbing with secondary containment trenching. The total volume of waste materials stored in the container storage area will not exceed ten fold the value of secondary containment, less any displacement by pallets for the maximum amount of wastes which can be stored while maintaining adequate aisle space and stacking height, whichever is less. The slab and curbing for the container storage area are made of steel-reinforced concrete and concrete has been poured so that no cracks or gaps exist between them. The entire base is free of cracks and gaps and has been sealed to render it impermeable. The wastes in storage are compatible with the materials in the base and/or sealant. Drawings in Appendix D provide containment details. Secondary containment calculations are shown in Appendix E. The available secondary containment for the container storage area is 2,018 gallons, which allows for the storage of 20,180 gallons of waste. However, no more than 10,560 gallons will be stored in the area at any given time.

The secondary containment for the metal flammable materials storage shelter is in the form of interlocking metal pans. A metal cap is placed over the joints between pans to prevent spills from migrating between the pans. The caps are sealed to further prevent wastes from migrating outside the containment. The metal pans also contain overflow pipes that interconnect the pans. This design allows a potential spill in one pan to drain into adjoining pans without overflowing an individual pan. Drawings in Appendix D provide containment construction details. Secondary containment calculations are also

shown in Appendix E. The available containment volume is 1,122 gallons. However, no more than 2,184 gallons of waste will be stored in this structure.

7.3 PREVENTION OF RUNON, RUNOFF AND ACCUMULATION OF SPILLS

The container storage areas are covered, so collection of precipitation, run-on and runoff are prevented. Any spilled or leaked waste must be removed from secondary containment systems with sufficient frequency to prevent overflow. Daily inspections of the containment systems will result in the removal of any accumulated spilled liquids. Removal of spilled liquids from the secondary containment may be facilitated by the use of a pump and/or absorbent material. Recovered materials resulting from a spill or leak will be containerized and managed as hazardous waste.

7.4 STORAGE CONFIGURATION

At least 2 feet of aisle space will be maintained between rows of pallets and at least 0.5 foot will be maintained between individual pallets within a row to allow unobstructed movement of personnel and spill and fire control equipment in the storage areas. All containers are easily inspected and accessed through the aisles. At no time will a leaking drum be moved to an area without secondary containment. Containers of permitted waste in the storage areas will be placed on pallets. Typical pallet configurations are included in Appendix D. This arrangement will not exceed a stack height of 6.5 feet or the height of two containers stacked on pallets, whichever is greater. No more than ten times the volume of secondary containment (both product and waste) will be stored in the container storage areas at any given time.

7.5 COMPATIBILITY OF WASTES AND CONTAINERS

All containerized wastes are placed in packaging authorized or specified by the Department of Transportation, as described in 49 CFR 172.101. All wastes are segregated according to the Department of Transportation's load and segregation chart as described in 49 CFR 177.848. The wastes stored in the container storage areas are compatible with the containers in which they are stored. Containerized waste types stored in the permitted container storage areas are also compatible with one another.

7.6 HANDLING AND MANAGEMENT OF CONTAINERS

Containers holding hazardous waste must always be closed during storage, except when it is necessary to add or remove waste. In addition, containers holding hazardous waste must not be opened, handled or stored in a manner which may rupture the container or cause it to leak.

Containers must be closed during movement and they must be opened in a contained area whenever possible. Contact with objects that might puncture or otherwise damage the drums must be avoided.

7.7 INSPECTIONS

The container storage area and flammable materials storage shelter must be inspected each operating day. If a container holding hazardous waste is not in good condition, or if it begins to leak, it must be placed into a properly rated salvage container, or its contents transferred into a container of good integrity.

The containment structures must be inspected for cracks, corrosion and other signs of deterioration. Any signs of deterioration must be noted in the inspection record and remediated immediately.

7.8 BUFFER ZONE REQUIREMENTS

Containers holding ignitable waste must not be stored less than 50 feet from the property line. While the entire storage area does meet the 50-foot setback requirements.

7.9 COMPLIANCE WITH LAND DISPOSAL RESTRICTIONS

In accordance with 40 CFR 268.50, each container must be clearly marked to identify its contents and the date the period of accumulation began. No container may be stored for longer than one year.

8.0 MANAGEMENT OF WASTES IN TANKS

8.1 DESCRIPTION OF TANK SYSTEM

The written assessment of the tank system by an independent, qualified, professional engineer required under 40 CFR 264.192 is provided in Appendix E. The entire tank system is aboveground and the piping outside of secondary containment has welded joints.

The 20,000-gallon aboveground, vertical tank used for storage of used parts washer solvent is constructed of 3/16-in. (¼ in. thick in the lower third of the tank) carbon steel painted a light color to reflect sunlight and minimize corrosion. The waste tank has been designed in accordance with Underwriters Laboratories Standard 142 and is located more than 20 feet from the property line, in accordance with Table 2-6 of the *National Fire Protection Buffer Zone Requirements*. The tank farm is secured within the facility's perimeter fencing.

The 10,000-gallon aboveground, horizontal self-contained tank used for the storage of spent antifreeze is constructed of ¼-in carbon steel painted a light color to reflect sunlight and minimize corrosion. The tank has been designed in accordance with Underwriters Laboratories Standard 142 and is located more than 20 feet from the property line, in accordance with Table 2-6 of the *National Fire Protection Buffer Zone Requirements*. The tank is secured within the facility's perimeter fencing.

Each tank is equipped with a pressure/vacuum vent, which operates at 2 oz. of pressure per inch (0.125 psig) and 1 oz. of vacuum per inch (0.0625 psig). The tanks operate at atmospheric pressure and venting is to the atmosphere. Also, the 24-inch manway on the used solvent tank is provided with long bolts, partially threaded, to allow for emergency venting of the tank in the event of an emergency as prescribed by the National Fire Protection Association. The specific gravity of 105°F mineral spirits is 0.8, and the vapor pressure is 0.4 mm Hg @ 68F°. The specific gravity of spent antifreeze is greater than 1.0 and the material is generally two-thirds water, therefore the vapor pressure of the material is not a major concern. Drawings located in Appendix D, provide additional information about the tanks and the high level alarms. Process flow diagrams are contained in Appendix B. There are no bypass systems for the storage tanks.

The tank farm is not subject to conditions that would result in external corrosion. The entire system is inspected each operating day. No severe atmospheric conditions are anticipated that would result in external corrosion. Daily inspections of the tank will detect any leaks within 24-hours of their occurring.

8.2 DESCRIPTION OF THE CONTAINMENT SYSTEM

The secondary containment system for the used parts washer solvent storage tank consists of a monolithically poured slab and dike wall, which are free of cracks and gaps. The slab is 6-inch and the wall is 8-inch thick steel reinforced concrete. A sump is located in the containment area to facilitate removal of liquids (i.e. precipitation). Each tank is equipped with a high level alarm. The 10,000 gallon spent antifreeze tank is a self-contained unit. Tank engineering specifications and secondary containment calculations for the tanks are provided in appendices D and E..

8.3 TANK MANAGEMENT PRACTICES

The used parts washer solvent storage tank, the spent antifreeze tank, and their secondary containment must be inspected each operating day. Detailed instructions for these inspections are in Section 3.2. Volume gauges must be checked to ensure the tanks are not being over filled. Any leaks or signs of deterioration must be noted and remediated immediately. The procedures to remove spilled or leaked material from the secondary containment dike are described in Sections 4.3.1 and 4.3.2. Spilled or leaked waste will be removed immediately upon detection. An ultrasonic shell thickness test must be performed at an interval not to exceed twelve months, and when a failure is imminent or suspected to have occurred.

If during the daily inspection, corrosion is noted, it will be removed and the tank repaired. If corrosion is significant and localized, the tank will be immediately taken out of service and repaired (i.e., a patch welded over the corroded area). Should the corrosion of the vessel be extensive or of the tank or its secondary containment is found to be leaking (as a result of the visual inspection of the tank, its ancillary equipment and secondary containment), the vessel will be immediately taken out of service and replaced. In the case of a tank, which leaks outside of the containment dike, procedures in the facility's contingency plan will be initiated.

Whenever there is any indication of an imminent or possible failure of the tank, it must be remediated in accordance with following provisions. If the tank is removed from service because an imminent or possible failure is expected: 1) waste must not be added to the tank after the tank is removed from service, 2) waste must be contained to the extent possible, 3) measures to stop the leak must be taken, and 4) if the leak can not be stopped by any other means, the waste must be removed from the tank. If the integrity of the tank is questionable, it must be taken out of service and the waste must be removed.

The steps described in the preceding paragraph must be taken immediately upon discovering an imminent or suspected leak. Possible types of repair include welding of patches over holes or thin spots, lining of tanks, patching of cracks in secondary containment and welding of pipes and pipe joints. It may also be necessary to replace affected parts.

The containment structure must be inspected for cracks, corrosion and other signs of deterioration. Any signs of deterioration must be noted and repaired immediately. A sealant will be applied to the tank farm storage pad and sump. The used parts washer solvent is compatible with the tank, the concrete, and the sealant. The tank dike will collect all accumulated liquids, which will be handled as described in this section and in the contingency plan.

All repairs that required the tank system to be removed from service must be certified by an independent professional engineer registered in Illinois, before the system may be used again.

The emergency waste feed cut-off valves, located adjacent to the drum washer/dumpster, may be activated to prevent the used parts washer solvent storage tank from being over filled. The high level alarms will indicate when the tank is 95% full.

When the used parts washer solvent tank is unloaded into a tanker for transport to a reclaimer, or product is delivered to the site, the following procedures will be implemented to prevent the potential for spills to occur:

1. Secure the tractor-trailer for unloading or loading in the location which has easy access to the pump or curb-side of the unit. Set brakes, engage the governor and hook up grounding equipment.

2. Check available tank volumes via gauges or measure with a stick to verify that there is enough volume to transfer each load safely and prevent over fills. Leave all hatches open on storage tanks and on the tanker truck.

3. Make hose connections between storage tank and tanker truck in proper sequence (i.e., to empty vessel first). Double check to ensure all connections are tight and locked.

4. Engage pump and transfer clean product to the appropriate storage tank. Check for leaks along hose, piping and at connections. If a leak is noted, stop the operation immediately and make repairs or make arrangements for repairs.

5. Check the available tanker truck volume. Reverse hose connections and transfer dirty solvent from the used parts washer solvent storage tank to tanker truck. (Again, check for leaks and repair as needed).

6. Drain all hoses before disconnecting to prevent spillage.

7. In the event of a spill, follow the emergency procedures outlined in the contingency plan.

8. Check all paperwork; document proper quantities of material delivered and picked up. Insure all manifests, bills of lading and other related paperwork are in order.

In the event of a spill or leak, the procedures described in the contingency plan will be followed. A minor spill will be handled as described in Section 4.3.1 any major spill as in Section 4.3.2. All accumulated material will be pumped to the used solvent storage tank. Any absorbents used in the cleanup will be containerized, labeled and handled as hazardous waste. All equipment used will be decontaminated.

8.4 STANDARDS FOR IGNITABLE WASTES

The following is a list of fire prevention and minimization measures:

a. **All wastes and products are kept away from ignition sources-** Personnel must confine smoking and open flames to remote areas, separate from any solvent (e.g., the designated smoking area away from all storage/process areas). The return and fill area, container storage areas, and aboveground tanks are separated from the office area by fire doors or by distance to minimize the potential for fire to spread or injury to personnel.

b. **Ignitable wastes are handled so that they do not**:

   1. **Become subject to extreme heat or pressure, fire or explosion, or a violent reaction-** The parts washer solvent waste is stored in a tank, which is separate from sources of extreme heat, fire or potential explosion sources and is not subject to violent reactions. The tanks are vented and are kept at atmospheric temperature to minimize the potential for pressure build up.

   2. **Produce uncontrolled toxic mists, fumes, dust or gases in quantities sufficient to threaten human health-** The vapor pressure of mineral spirits is low (0.4 mm Hg @ 68F) and is reactive with strong oxidizers only. Toxic mists, fumes, dust or gases will not form in quantities sufficient to threaten human health since strong oxidizers are not handled at this facility and the solvent vaporization will be minimal under normal working conditions.

   3. **Produce uncontrolled fires or gases in quantities sufficient to pose a risk of fire or explosion**-See 'a' above and 'c' below.

   4. **Damage the structural integrity of the Safety-Kleen facility**-the parts washer solvent will not cause deterioration of the tank, drums or other structural components of the facility.

c. **"No Smoking" signs are posted**-in areas where solvents are handled for storage.

d. **Fire extinguishers must be checked**-once per week and tested by the fire extinguisher company once per year. These are kept in the warehouse and return and fill station.

8.5 INTERNAL COMMUNICATION

The tanker trucks that serve this facility are equipped with citizen's band radios to facilitate communications. The nearest telephone is located near the loading/unloading area in the office portion of the building. Conversely, the telephone loudspeaker system may be used by employees in the building to alert employees at the tank farm area of an emergency situation.

8.6 AIR EMISSIONS FOR EQUIPMENT LEAKS

Pursuant to Subpart BB of 40 CFR Part 264 and 40 CFR 270.25, Safety-Kleen inspects all regulated units for leaks on an operating daily basis. Compliance with the standard 40 CFR 264.1058 is achieved through daily facility inspections, and if required, leak detection monitoring and repair. Daily inspections of all tank equipment (pumps, flanges, and valves) are conducted in conjunction with the daily inspections of the waste management units. The equipment is inspected for potential leaks by visual, olfactory, audible and any other detection methods. If a potential leak is detected, the piece of equipment will be tagged with the equipment ID Number and the dates which evidence of a potential leak and actual leak were detected as specified in 40 CFR 264.158(c)(1). If evidence of a potential leak is detected, the equipment will be monitored by the method specified in 40 CFR 264.1063(b) and (c). The facility inspection record has been updated to include detailed daily equipment inspection. Records of equipment monitoring and repair are maintained on a separate form in the operating record. A detailed schematic identifying all affected equipment is located in Appendix D (Figure D-10).

8.7 RCRA SUBPART CC ORGANIC AIR EMISSION STANDARDS FOR TANKS AND CONTAINERS

The Safety-Kleen service center in Pekin controls air pollutant emissions for applicable hazardous waste management units pursuant to requirements of RCRA Subpart CC.

Following is the facility's waste determination procedures, tank and container design/management practices, organic emission controls, inspections and monitoring, record-keeping, and reporting requirements.

a. Waste Determination Procedures - For purposes of waste determination, the facility utilizes knowledge developed in the Waste Characteristics portion of the Plan of Operation of the site's hazardous waste permit. For the hazardous wastes which are managed on a transfer basis, the Subpart CC regulation does not apply. However, the facility may use knowledge of the waste based on information included in manifests, shipping papers, or waste certification notices to confirm waste determination for the generator or the ultimate receiving facility.

   Based upon this knowledge, it has been determined that all hazardous waste managed in tanks or applicable containers at this facility may contain an average volatile organic concentration of greater than 500 PPM at the point of waste origination. Therefore, all hazardous waste managed in tanks or containers subject to regulation shall be managed in accordance with applicable Subpart CC, NR 632 and NR 633 standards. Under such a management scenario, no direct measurements will be conducted.

b. Point of Waste Origination - The point of waste origination for all hazardous wastes generated from off-site sources and transported to a Safety-Kleen service center in DOT authorized containers, which will subsequently be managed in tanks or containers on-site, is the facility boundary at the entrance gate.

   For hazardous waste generated on-site, the point of waste origination is the point of hazardous waste generation as defined under hazardous waste regulations.

8.7.1 Container Standards (40 CFR 265.1087)

Containers used to manage organic wastes at this facility are described in detail in the Plan of Operation. Certain features of these units, as they relate to Subpart CC regulations, are described below.

a. Containers managing hazardous wastes at this facility generally fall into three categories.

   1. Hazardous waste containers less than 26 gallons in capacity that are wholly exempt from consideration under Subpart CC. This includes 5-gallon and 15-gallon containers. Even though exempt from Subpart CC, these containers have covers that are designed with no visible gaps, holes, cracks, or other open spaces into the container. The cover openings are equipped with closure devices designed with no visible cracks, holes, gaps, or other open spaces when secured in closed position. In addition, all containers used to handle hazardous waste meet U.S. DOT Performance Oriented Packaging Standards.

2. Containers of hazardous wastes that are transferred through the facility that are "still in the course of transportation" and therefore are exempt from Subpart CC. This includes containers of various sizes (for example, 5-gallon, 15-gallon, 30-gallon, 55-gallon, and larger containers). Even though exempt from Subpart CC, these containers have covers that are designed with no visible gaps, holes, cracks, or other open spaces into the container. The cover openings are equipped with closure devices designed with no visible cracks, holes, gaps, or other open spaces when secured in closed position. In addition, all containers used to handle hazardous waste meet U.S. DOT Performance Oriented Packaging Standards.

3. Level 1 containers for hazardous wastes generated or managed at the facility. These containers are larger than 26 gallons and less than 122 gallons, or the container may be larger than 122 gallons if it does not manage waste considered to be light material service. The Level 1 containers have covers that are designed with no gaps, holes, cracks, or other open spaces into the container. The cover openings are equipped with closure devices designed with no visible cracks, holes, gaps, or other open spaces when secured in closed position. In addition, all containers used to handle hazardous waste meet U.S. DOT Performance Oriented Packaging Standards.

8.7.2 Management Procedures

a. Inspections - Hazardous Waste Received from Off-Site – All hazardous waste received from off-site sources is received in containers. Such containers are visually inspected either at the time they are unloaded for storage or staged for transfer at the facility, or during the facility inspections. This written plan and schedule to perform the inspection requirements of Subpart CC is incorporated into the facility inspection plan by this reference.

   Defective containers will be remediated within 5 days of observation, and initial remediation will be attempted within 24 hours of observation.

   On-Site Generated Hazardous Waste – Containers greater than 26 gallons will be visually inspected upon their initial filling to ensure that all openings are properly closed and/or covered.

   Satellite accumulation containers managed in accordance with 40 CFR 262.34(c)(1) are not subject to Subpart CC requirements.

   Containers Managing On-Site Generated Hazardous Waste - Level 1 containers managed at the service center are not subject to monitoring for no detectable emissions (NDE). Therefore, no monitoring for NDE will be

conducted on such containers. However, they will be closed when not involved in transfer activities.

b. Level 1 Operating Requirements – Whenever hazardous waste is in a Level 1 container, the covers, openings, and closure devices should be closed except as follows:

1. When transferring hazardous waste into or out of the container, including continuous transfer operations.

2. The container must be closed between batch transfers that exceed 15 minutes between transfers.

c. Transferring Hazardous Waste

1. Container to Container – This type of transfer will typically be done at the service center when it is necessary to remove waste from a damaged container to a non-damaged container that will provide containment for the waste, or to place the entire container into a larger container. An example would be placing a 55 gallon container into an 85 gallon overpack or salvage drum. This may occur for both liquid and solid wastes. Only container openings that are necessary to add or remove waste from each container will be open during the transfer.

2. Container to Tank – This type of transfer involving liquids will be done regularly for Level 1 containers. Provided below is an explanation of this activity.

   Subpart CC exempt containers (i.e., 5-gallon, 16-gallon) and Level 1 containers containing hazardous waste are transferred into a Level 1 tank using a closed transfer system. The waste is drained through a filter-housing unit (return & fill dumpster) and piped into a Level 1 tank. The return & fill dumpster will be closed if material will not be added to or removed from the unit for 15 minutes or the person operating the unit leaves the immediate vicinity of the unit. This transfer operation is conducted in a manner that minimizes emissions.

8.8 TANK STANDARDS (40 CFR 265.1085)

Tanks used to manage organic wastes at this facility are described in detail in the Plan of Operation. Certain features of these units, at they relate to the Subpart CC standards, are described below.

8.8.1 Service Center Management Procedures

a. The used parts washer solvent aboveground storage tank and spent antifreeze tank are fixed roof, non-pressurized, quiescent tanks. The used parts washer solvent tank and spent antifreeze tank are Level 1 tanks under Subpart CC. The tank design capacity of the used parts washer solvent tank is less than 20,000 gallons, and the waste in the tank exhibits a vapor pressure of less than 5.2 kPa (11.1 psi). The actual vapor pressure of the material is 0.2 psia, which was determined using knowledge of the waste pursuant to 265.1084(c)(4). The tank design capacity of the spent antifreeze tank is less than 20,000 gallons and the waste in the tank exhibits a vapor pressure of less than 27.6 kPa (4.05 psi). The actual vapor pressure of the material managed in the tank is ≈0.001 psia, which was determined using knowledge of the waste pursuant to 265.1084(c)(4).

   The tanks are designed so that all cover openings can be closed with no visible gaps, holes, cracks, or other open spaces into the interior of the tank. The cover openings are maintained in a closed position at all times except when waste is being added to or removed from the tank, or when necessary sampling or repair/maintenance is performed on the tank.

   The used parts washer solvent tank and spent antifreeze tank are equipped with a variety of closure and/or safety devices (i.e. conservation vents, long-bolted pressure relief manways, pressure relief hatches) that vent to the atmosphere in the event of an emergency or to prevent excessive pressure or vacuum that could rupture the atmospheric storage tank. Opening of pressure-vacuum relief valves and venting to the atmosphere is allowed during normal operations for the purpose of maintaining the internal pressure of the container in accordance with the container design specifications and local building and fire codes. The used parts washer solvent tank and spent antifreeze tank are equipped with a pressure-vacuum vent. The vent is manufactured to discharge when internal tank pressure exceeds 2 oz./in.^{2} or allow external air to enter the tank if the vacuum exceeds 1 oz/in.^{2}.

b. Inspections- Initial visual tank inspections were conducted on the used parts washer solvent tank and spent antifreeze tank. No defects that could result in air emissions were observed in the fixed roof and closure devices or each unit. Visual inspections of the tanks will be conducted on an annual basis.

c. Monitoring – Monitoring for NDE is not required for Level 1 tanks, therefore no such monitoring will be conducted.

8.8.2 Transferring Hazardous Waste

Tank to Tank – This transfer occurs when a tank truck is removing waste solvent or spent antifreeze from the tank for transport to an off-site process

facility. This type of transfer is conducted using a closed system that consists of continuous hard piping and/or flexible hoses that does not allow exposure of liquid hazardous waste to the atmosphere.

8.9 MISCELLANEOUS UNITS

The miscellaneous unit, which manages organic waste at this facility, is described in detail in the Plan of Operation. Certain features of these units, as they relate to the Subpart CC standards, are described below.

8.9.1 Service Center Management Procedures

a. The wet dumpster/drum washer is a non-pressurized, quiescent unit. The unit is designated as a Level 1 unit Subpart CC. The design capacity of the wet dumpster/drum washer is 165 gallons with a maximum sump capacity of 40 gallons. The waste that is transferred through the unit exhibits a vapor pressure of less than 76.6 kPa for units < $75m^3$. The actual vapor pressure of the material is 0.2 psia, which was determined using knowledge of the waste pursuant to 265.1084(c)(4).

   The unit is designed so that the top lid is a cover or fixed roof, such that, openings can be closed with no visible gaps, holes, cracks, or other open spaces into the interior of the unit. While in operation, emissions are controlled by having a very slow solvent spray rate, with the nozzle in a down position. The unit is designed to create no atomization of the solvent. Cover openings are maintained in a closed position at all times except when waste is being added, during periods of routine inspection and maintenance, or removal of accumulated sludge or residues.

b. Inspections- Initial visual tank inspection of the unit will be completed upon installation. Visual inspections of the units are conducted on a daily basis.

c. Monitoring – Monitoring for NDE is not required for Level 1 units, therefore no such monitoring will be conducted.

8.10 EXPECTED AIR EMISSIONS FROM FACILITY OPERATIONS

Safety-Kleen service centers are operated to minimize discharge of pollutants into the air. Section 9.1 discusses this in detail.

9.0 OTHER FEDERAL/STATE LAWS

This section discusses other federal laws that might apply to operations at the Pekin Service Center. Safety-Kleen's compliance with RCRA, the most applicable regulatory requirement, is demonstrated throughout this permit. However, other federal environmental laws might apply. State and local environmental laws are also considered in terms of requirements they might impose on the Pekin Service Center.

9.1 AIR REGULATIONS

Pursuant to the Clean Air Act (CAA), emissions standards for a wide range of pollutants have been established. National Ambient Air Quality Standards (NAAQS) for criteria pollutants have been set for carbon monoxide, nitrogen dioxide, particulate matter (less than 10 microns in size), and sulfur oxides. These pollutants are not handled or emitted by the Pekin Service Center. National Emission Standards for Hazardous Air Pollutants (NESHAP) sets standards for specific pollutants from specific sources (for example, asbestos emissions from asbestos mills). Pekin Service Center operations do not fit the source/pollutant categories. The New Source Performance Standards for Criteria Designate Pollutants regulate the same compounds as the NAAQS and fluorides, sulfuric acid mist, and total reduced sulfur (including hydrogen sulfide). Again, these are not compounds handled by the Pekin Service Center. The Pekin Service Center is not currently required to have any air permits under the federal regulation of the CAA. Safety-Kleen will continue to monitor amendments to the CAA (passed in 1990) so that steps to ensure compliance with applicable standards are taken.

The State of Illinois has established State Air Laws pursuant to the CAA, which are designed not to conflict with federal regulations. By complying with federal air requirements, Safety-Kleen ensures that the majority of State requirements are met. Safety-Kleen previously reviewed Illinois' air regulations and it was determined that the Pekin Service Center is required to maintain an Air Emissions Operating Permit for Small Sources. Safety-Kleen received Air Emissions Operating Permit #179801AAV on May 6, 1991 and continues to operate under the permit's guidelines. A copy of the permit is included in Appendix J, Exhibit J-1.

9.2 WATER REGULATIONS

Clean Water Act

The Clean Water Act (CWA) established guidelines and standards to control direct and indirect discharges of pollutants to United States waters. Discharges are regulated by the National Pollutant Discharge Elimination System (NPDES). The Pekin Service Center is currently permitted under IEPA NPDES Permit No. IL0072036. A copy of the permit is located in Appendix J, Exhibit J-2.

Safe Drinking Water Act

The Safe Drinking Water Act (SDWA) has established three programs designed to protect and improve the quality of the nation's water resources: (1) drinking water standards, (2) the underground injection control (UIC) program, and (3) sole-source and wellhead protection programs. Drinking water standards have been established for specific contaminants determined to have an adverse effect on human health. The Pekin Service Center has no direct discharges of these contaminants to water. In addition, the facility has established inspection and spill prevention procedures to ensure that no indirect discharges are occurring. The Pekin Service Center does not have a high potential for contaminating public water supplies.

9.3 CHEMICAL-SPECIFIC REGULATIONS

This section considers regulations governing specific pollutants not discussed previously. The Pekin Service Center does not treat, store, or dispose of hazardous wastes containing radioactive constituents, pesticides, polychlorinated biphenyls (PCBs), or other material to which federal chemical-specific regulations apply.

9.4 LOCATION-SPECIFIC REGULATIONS

Listed below are federal location-specific regulations and their areas of applicability:

- US EPA's statement of procedures and flood plains management and wetlands protection-facilities located within a 100-year flood plain or near a wetlands area.

- Endangered Species Act- areas determined to be habitats for endangered or threatened species.

- CWA, Section 404-wetlands as defined by US Army Corps of Engineers regulations.

- Wilderness Act-federally-owned areas designated as wilderness areas.

- National Historical Preservation Act-alteration of terrain that threatens significant scientific, prehistoric, historical, or archaeological data or property included in the National Register of historic places.

The waste management units at the Pekin Service Center are not within a 100-year floodplain. The Pekin Service Center is located in an area zoned for industrial use, and the facility does not engage in activities that would fall under the jurisdiction of the above-referenced acts. Safety-Kleen will continue to monitor regulations that might

designate environmental areas of concern impacting the Safety-Kleen Service Center to ensure compliance with any associated regulations.

To the best of Safety-Kleen's knowledge, the Safety-Kleen facility and its operations are not likely to jeopardize the continued existence of any endangered or threatened species, or adversely affect its habitat. The site has been properly zoned and sited, and there is no reason to believe that the facility is endangering any known threatened species.

10.0 PART B CERTIFICATION

10.1 FACILITY CERTIFICATION

The Federal Part A form has been signed conforming to the applicable requirements by a Safety-Kleen official, and is included in Appendix A.

10.2 ENGINEERING CERTIFICATION

Engineering certifications are required for all hazardous waste storage units that are subject to RCRA Part B permitting requirements. These areas have been reviewed as part of the certification process (by a registered professional engineer) of this permit renewal application.

11.0 POTENTIAL CONTINUING RELEASES AT PERMITTED FACILITIES

11.1 SOLID WASTE MANAGEMENT UNITS

RCRA regulated hazardous wastes that are accumulated and stored at the Pekin Service Center for more than 90 days are described in Sections 1 through 10 of this Part B permit application. The potential solid waste management units (SWMUs) include:

- The container storage area
- The flammable materials storage shelter
- The return and fill station
- The (1) 20,000-gallon aboveground tank for used parts washer solvent
- The (1) 10,000-gallon aboveground self-contained tank for spent antifreeze
- The (2) 20,000-gallon aboveground tanks for used oil and oily water.

Information pertaining to these SWMUs, including the physical description of the SWMUs, secondary containment, and the contents has been included in the preceding sections. The closure of all these units is planned for the year 2050.

In addition to the SWMUs described above, there were two 12,000-gallon underground storage tanks (USTs) used for storage of clean and spent solvent. Closure of the former USTs was initiated in 1991, with the tank being removed in 1991 as well. Since that time the area has been "clean closed" and no further action with respect to the former SWMUs is needed. A letter acknowledging the certification of closure of the units was received from the Illinois Environmental Protection agency on October 22, 1997.

At the time of this submittal (May 2, 2003), Safety-Kleen intends to conduct partial closure on the outdoor return and fill station and the container storage area located to the south of the tank farm. Safety-Kleen intends to "clean-close" the units in accordance with the approved closure plan, and no post-closure activities are anticipated at this time.

11.2 HISTORY OF RELEASES

The spill prevention procedures detailed in Section F ensure that any minor spills are detected and cleaned up in an efficient manner protective of human health and the environment. Information regarding any spills on site is kept on file at the facility.

APPENDIX A
PART A APPLICATION

MAIL THE COMPLETED FORM TO: Appropriate EPA Regional or State Office.	United States Environmental Protection Agency **RCRA SUBTITLE C SITE IDENTIFICATION FORM**	
1. Reason for Submittal (See instructions on page 25) CHECK CORRECT BOX(ES)	**Reason for Submittal:** ☐ To provide initial notification (to obtain an EPA ID Number for hazardous waste, universal waste, or used oil activities). ☐ To provide subsequent notification (to update site identification information). ☐ As a component of a First RCRA Hazardous Waste Part A Permit Application. ☒ As a component of a Revised RCRA Hazardous Waste Part A Permit Application (Amendment # Permit Renewal). ☐ As a component of the Hazardous Waste Report.	
2. Site EPA ID Number (See instructions on page 26)	**EPA ID Number:** I L D 0 9 3 8 6 2 8 1 1	
3. Site Name (See instructions on page 26)	**Name:** Safety-Kleen Systems, Inc.	
4. Site Location Information (See instructions on page 26)	**Street Address:** 14249 VFW Road	
	City, Town, or Village: Pekin	**State:** Illinois
	County Name: Tazwell	**Zip Code:** 61554
5. Site Land Type (See instructions on page 26)	**Site Land Type:** ☒ Private ☐ County ☐ District ☐ Federal ☐ Indian ☐ Municipal ☐ State ☐ Other	
6. North American Industry Classification System (NAICS) Code(s) for the (See instructions on page 26)	**A.** 532490	**B.** 562112
	C. 484220	**D.** 484230
7. Site Mailing Address (See instructions on page 27)	**Street or P. O. Box:** same	
	City, Town, or Village:	
	State:	
	Country:	**Zip Code:**
8. Site Contact Person (See instructions on pages 27)	**First Name:** Matthew **MI:** C	**Last Name:** Sauvageau
	Phone Number: 847-468-6701	**Phone Number Extension:** n/a
9. Legal Owner and Operator of the Site (See instructions on pages 27 and 28)	**A. Name of Site's Legal Owner:** Safety-Kleen Systems, Inc.	**Date Became Owner (mm/dd/yyyy):** 05/20/98
	Owner Type: ☒ Private ☐ County ☐ District ☐ Federal ☐ Indian ☐ Municipal ☐ State ☐ Other	
	B. Name of Site's Operator: Safety-Kleen Systems, Inc.	**Date Became Operator (mm/dd/yyyy):** 05/20/98
	Operator Type: ☒ Private ☐ County ☐ District ☐ Federal ☐ Indian ☐ Municipal ☐ State ☐ Other	

EPA ID No. I L D 0 9 3 8 6 2 8 1 1

10. Type of Regulated Waste Activity (Mark 'X' in the appropriate boxes. See instructions on pages 28 to 32)

ɪzardous Waste Activities

1. Generator of Hazardous Waste
(choose only one of the following three categories)

☒ a. LQG: Greater than 1,000 kg/mo (2,200 lbs./mo.) of non-acute hazardous waste; or

☐ b. SQG: 100 to 1,000 kg/mo (220 - 2,200 lbs./mo.) of non-acute hazardous waste; or

☐ c. CESQG: Less than 100 kg/mo (220 lbs./mo.) of non-acute hazardous waste

In addition, indicate other generator activities (check all that apply)

☐ d. United States Importer of Hazardous Waste

☐ e. Mixed Waste (hazardous and radioactive) Generator

For Items 2 through 6, check all that apply:

☒ **2. Transporter of Hazardous Waste**

☒ **3. Treater, Storer, or Disposer of Hazardous Waste (at your site)** Note: A hazardous waste permit is required for this activity.

☐ **4. Recycler of Hazardous Waste (at your site)** Note: A hazardous waste permit may be required for this activity.

5. Exempt Boiler and/or Industrial Furnace

☐ a. Small Quantity On-site Burner Exemption

☐ b. Smelting, Melting, and Refining Furnace Exemption

☐ **6. Underground Injection Control**

B. Universal Waste Activities

1. Large Quantity Handler of Universal Waste (accumulate 5,000 kg or more) [refer to your State regulations to determine what is regulated]. Indicate types of universal waste generated and/or accumulated at your site. (check all boxes that apply):

	Generated	Accumulated
a. Batteries	☐	☐
b. Pesticides	☐	☐
c. Thermostats	☐	☐
d. Lamps	☐	☐
e. Other (specify) _____	☐	☐
f. Other (specify) _____	☐	☐
g. Other (specify) _____	☐	☐

☐ **2. Destination Facility for Universal Waste**
Note: A hazardous waste permit may be required for this activity.

C. Used Oil Activities

1. Used Oil Transporter - Indicate Type(s) of Activity(ies)

☒ a. Transporter

☒ b. Transfer Facility

2. Used Oil Processor and/or Re-refiner - Indicate Type(s) of Activity(ies)

☐ a. Processor

☐ b. Re-refiner

☐ **3. Off-Specification Used Oil Burner**

4. Used Oil Fuel Marketer - Indicate Type(s) of Activity(ies)

☐ a. Marketer Who Directs Shipment of Off-Specification Used Oil to Off-Specification Used Oil Burner

☐ b. Marketer Who First Claims the Used Oil Meets the Specifications

11. Description of Hazardous Wastes (See instructions on page 33)

A. Waste Codes for Federally Regulated Hazardous Wastes. Please list the waste codes of the Federal hazardous wastes handled at your site. List them in the order they are presented in the regulations (e.g., D001, D003, F007, U112). Use an additional page if more spaces are needed.

EPA ID No. I L D 0 9 3 8 6 2 8 1 1

B. Waste Codes for State-Regulated (i.e., non-Federal) Hazardous Wastes. Please list the waste codes of the State-regulated hazardous wastes handled at your site. List them in the order they are presented in the regulations. Use an additional page if more spaces are needed for waste codes.

12. Comments (See instructions on page 33)

13. Certification. I certify under penalty of law that this document and all attachments were prepared under my direction or supervision in accordance with a system designed to assure that qualified personnel properly gather and evaluate the information submitted. Based on my inquiry of the person or persons who manage the system, or those persons directly responsible for gathering the information, the information submitted is, to the best of my knowledge and belief, true, accurate, and complete. I am aware that there are significant penalties for submitting false information, including the possibility of fine and imprisonment for knowing violations. **(See instructions on page 33)**

Signature of owner, operator, or an authorized representative	Name and Official Title (type or print)	Date Signed (mm/dd/yyyy)
	Lin Longshore Sr. VP-Environmental, Health & Safety	3/03/03

OMB #: 2050-0034 Expires 10/31/02

United States Environmental Protection Agency

HAZARDOUS WASTE PERMIT INFORMATION FORM

1. Facility Permit Contact (See instructions on page 35)	First Name: Same as site contact	MI:	Last Name:
	Phone Number:		Phone Number Extension:
2. Facility Permit Contact Mailing Address (See instructions on page 35)	Street or P.O. Box: 1500 East Villa Street		
	City, Town, or Village: Elgin		
	State: Illinois		
	Country: USA		Zip Code: 60120
3. Legal Owner Mailing Address and Telephone Number (See instructions on page 36)	Street or P.O. Box: 5400 Legacy Drive Cluster II, Building 3		
	City, Town, or Village: Plano		
	State: Texas		
	Country: USA	Zip Code: 75024	Phone Number 972-265-2000
4. Operator Mailing Address and Telephone Number (See instructions on page 36)	Street or P.O. Box: 5400 Legacy Drive Cluster II, Building 3		
	City, Town, or Village: Plano		
	State: Texas		
	Country: USA	Zip Code: 75024	Phone Number 972-265-2000
5. Facility Existence Date (See instructions on page 36)	Facility Existence Date (mm/dd/yyyy): April 1, 1976 (date that operations began at this site)		

6. Other Environmental Permits (See instructions on page 36)

A. Permit Type (Enter code)	B. Permit Number	C. Description
R	ILD093862811	RCRA Part B/HSWA
N	IL007203 6	IEPA Stormwater Operating Permit
E	1994-064DE/OP	IEPA Operating Permit
E	1798 01AAV	IEPA Air Operating Permit

7. Nature of Business (Provide a brief description; see instructions on page 37)

This facility includes a local sales/service office, and accumulation/distributibution warehouse and tanks for used solvents, used oils and antifreeze (which are reclaimed at a different location) and products (which include parts cleaning equipment, solvents, and allied products). Safety-Kleen collects used materials from customers on a periodic basis l accumulates the materials in a storage tank, or container storage area. These materials are then shipped to a reclaimation facility for management.

8. Process Codes and Design Capacities (See instructions on page 37)

PROCESS CODE - *Enter the code from the list of process codes below that best describes each process to be used at the facility. Thirteen lines are provided for entering codes. If more lines are needed, attach a separate sheet of paper with the additional information. For "other" processes (i.e., D99, S99, T04 and X99), describe the process (including its design capacity) in the space provided in Item 9.*

B. PROCESS DESIGN CAPACITY- *For each code entered in column A, enter the capacity of the process.*

1. AMOUNT - *Enter the amount. In a case where design capacity is not applicable (such as in a closure/post-closure or enforcement action) enter the total amount of waste for that process.*

2. UNIT OF MEASURE - *For each amount entered in column B(1), enter the code in column B(2) from the list of unit of measure codes below that describes the unit of measure used. Select only from the units of measure in this list.*

C. PROCESS TOTAL NUMBER OF UNITS - *Enter the total number of units for each corresponding process code.*

PROCESS CODE	PROCESS	APPROPRIATE UNITS OF MEASURE FOR PROCESS DESIGN CAPACITY
	Disposal:	
D79	Underground Injection Well Disposal	Gallons; Liters; Gallons Per Day; or Liters Per Day
D80	Landfill	Acre-feet; Hectare-meter; Acres; Cubic Meters; Hectares; Cubic Yards
D81	Land Treatment	Acres or Hectares
D82	Ocean Disposal	Gallons Per Day or Liters Per Day
D83	Surface Impoundment Disposal	Gallons; Liters; Cubic Meters; or Cubic Yards
D99	Other Disposal	Any Unit of Measure Listed Below
	Storage:	
S01	Container	Gallons; Liters; Cubic Meters; or Cubic Yards
S02	Tank Storage	Gallons; Liters; Cubic Meters; or Cubic Yards
S03	Waste Pile	Cubic Yards or Cubic Meters
S04	Surface Impoundment Storage	Gallons; Liters; Cubic Meters; or Cubic Yards
S05	Drip Pad	Gallons; Liters; Acres; Cubic Meters; Hectares; or Cubic Yards
S06	Containment Building Storage	Cubic Yards or Cubic Meters
	Other Storage	Any Unit of Measure Listed Below
	Treatment:	
T01	Tank Treatment	Gallons Per Day; Liters Per Day; Short Tons Per Hour; Gallons Per Hour; Liters Per Hour; Pounds Per Hour; Short Tons Per Day; Kilograms Per Hour; Metric Tons Per Day; or Metric Tons Per Hour
T02	Surface Impoundment Treatment	Gallons Per Day; Liters Per Day; Short Tons Per Hour; Gallons Per Hour; Liters Per Hour; Pounds Per Hour; Short Tons per Day; Kilograms Per Hour; Metric Tons Per Day; or Metric Tons Per Hour
T03	Incinerator	Short Tons Per Hour; Metric Tons Per Hour; Gallons Per Hour; Liters Per Hour; Btu Per Hour; Pounds Per Hour; Short Tons Per Day; Kilograms Per Hour; Gallons Per Day; Liters Per Day; Metric Tons Per Hour; or Million Btu Per Hour
T04	Other Treatment	Gallons Per Day; Liters Per Day; Pounds Per Hour; Short Tons Per Hour; Kilograms Per Hour; Metric Tons Per Day; Metric Tons Per Hour; Short Tons Per Day; Btu Per Hour; Gallons Per Day; Liters Per Hour; or Million Btu Per Hour
T80	Boiler	Gallons; Liters; Gallons Per Hour; Liters Per Hour; Btu Per Hour; or Million Btu Per Hour
T81	Cement Kiln	Gallons Per Day; Liters Per Day; Pounds Per Hour; Short Tons Per Hour; Kilograms Per Hour; Metric Tons Per Day; Metric Tons Per Hour; Short Tons Per Day; Btu Per Hour; Liters Per Hour; Kilograms Per Hour; or Million Btu Per Hour
T82	Lime Kiln	
T83	Aggregate Kiln	
T84	Phosphate Kiln	
T85	Coke Oven	
T86	Blast Furnace	
T87	Smelting, Melting, or Refining Furnace	Gallons Per Day; Liters Per Day; Pounds Per Hour; Short Tons Per Hour; Kilograms Per Hour; Metric Tons Per Day; Metric Tons Per Hour; Short Tons Per Day; Btu Per Hour; Gallons Per Hour; Liters Per Hour; or Million Btu Per Hour
T88	Titanium Dioxide Chloride Oxidation Reactor	
T89	Methane Reforming Furnace	
T90	Pulping Liquor Recovery Furnace	
T91	Combustion Device Used In The Recovery Of Sulfur Values From Spent Sulfuric Acid	
T92	Halogen Acid Furnaces	
T93	Other Industrial Furnaces Listed In 40 CFR §260.10	
T94	Containment Building - Treatment	Cubic Yards; Cubic Meters; Short Tons Per Hour; Gallons Per Hour; Liters Per Hour; Btu Per Hour; Pounds Per Hour; Short Tons Per Day; Kilograms Per Hour; Metric Tons Per Day; Gallons Per Day; Liters Per Day; Metric Tons Per Hour; or Million Btu Per Hour
	Miscellaneous (Subpart X):	
X01	Open Burning/Open Detonation	Any Unit of Measure Listed Below
X02	Mechanical Processing	Short Tons Per Hour; Metric Tons Per Hour; Short Tons Per Day; Metric Tons Per Day; Pounds Per Hour; Kilograms Per Hour; Gallons Per Hour; Liters Per Hour; or Gallons Per Day
X03	Thermal Unit	Gallons Per Day; Liters Per Day; Pounds Per Hour; Short Tons Per Hour; Kilograms Per Hour; Metric Tons Per Day; Metric Tons Per Hour; Short Tons Per Day; Btu Per Hour; or Million Btu Per Hour
X04	Geologic Repository	Cubic Yards; Cubic Meters; Acre-feet; Hectare-meter; Gallons; or Liters
X99	Other Subpart X	Any Unit of Measure Listed Below

UNIT OF MEASURE	UNIT OF MEASURE CODE
Gallons	G
Gallons Per Hour	E
Gallons Per Day	U
Liters	L
Liters Per Hour	H
Liters Per Day	V

UNIT OF MEASURE	UNIT OF MEASURE CODE
Short Tons Per Hour	D
Metric Tons Per Hour	W
Short Tons Per Day	N
Metric Tons Per Day	S
Pounds Per Hour	J
Kilograms Per Hour	R
Million Btu Per Hour	X

UNIT OF MEASURE	UNIT OF MEASURE CODE
Cubic Yards	Y
Cubic Meters	C
Acres	B
Acre-feet	A
Hectares	Q
Hectare-meter	F
Btu Per Hour	I

8. Process Codes and Design Capacities (*Continued*)

EXAMPLE FOR COMPLETING Item 8 (shown in line number X-1 below): A facility has a storage tank, which can hold 533.788 gallons.

Line Number		A. Process Code (From list above)	B. PROCESS DESIGN CAPACITY (1) Amount (Specify)	(2) Unit of Measure (Enter code)	C. Process Total Number of Units	For Official Use Only
X	1	S 0 2	5 3 3 . 7 8 8	G	0 0 1	
	1	S 0 1	12,744	G	0 0 2	
	2	S 0 2	30,000	G	0 0 2	
	3					
	4					
	5					
	6					
	7					
	8					
	9					
1	0					
1	1					
1	2					
1	3					

NOTE: If you need to list more than 13 process codes, attach an additional sheet(s) with the information in the same format as above. Number the lines sequentially, taking into account any lines that will be used for "other" processes (i.e., D99, S99, T04 and X99) in Item 9.

9. Other Processes (*See instructions on page 37 and follow instructions from Item 8 for D99, S99, T04 and X99 process codes*)

Line Number (Enter #s in sequence with Item 8)		A. Process Code (From list above)	B. PROCESS DESIGN CAPACITY (1) Amount (Specify)	(2) Unit of Measure (Enter code)	C. Process Total Number of Units	D. Description of Process
X	1	T 0 4				In-situ Vitrification
	1					
	2					
	3					
	4					

Description of Hazardous Wastes (See instructions on page 37)

A. EPA HAZARDOUS WASTE NUMBER - *Enter the four-digit number from 40 CFR, Part 261 Subpart D of each listed hazardous waste you will handle. For hazardous wastes which are not listed in 40 CFR, Part 261 Subpart D, enter the four-digit number(s) from 40 CFR Part 261, Subpart C that describes the characteristics and/or the toxic contaminants of those hazardous wastes.*

B. ESTIMATED ANNUAL QUANTITY - *For each listed waste entered in column A, estimate the quantity of that waste that will be handled on an annual basis. For each characteristic or toxic contaminant entered in column A, estimate the total annual quantity of all the non-listed waste(s) that will be handled which possess that characteristic or contaminant.*

C. UNIT OF MEASURE - *For each quantity entered in column B, enter the unit of measure code. Units of measure which must be used and the appropriate codes are:*

ENGLISH UNIT OF MEASURE	*CODE*	*METRIC UNIT OF MEASURE*	*CODE*
POUNDS	*P*	*KILOGRAMS*	*K*
TONS	*T*	*METRIC TONS*	*M*

If facility records use any other unit of measure for quantity, the units of measure must be converted into one of the required units of measure, taking into account the appropriate density or specific gravity of the waste.

D. PROCESSES

1. PROCESS CODES:

For listed hazardous waste: For each listed hazardous waste entered in column A select the code(s) from the list of process codes contained in Items 8A and 9A on page 3 to indicate the waste will be stored, treated, and/or disposed at the facility.

For non-listed hazardous waste: For each characteristic or toxic contaminant entered in column A, select the code(s) from the list of process codes contained in Items 8A and 9A on page 3 to indicate all the processes that will be used to store, treat, and/or dispose of all the non-listed hazardous wastes that possess that characteristic or toxic contaminant.

NOTE: THREE SPACES ARE PROVIDED FOR ENTERING PROCESS CODES. IF MORE ARE NEEDED:

1. *Enter the first two as described above.*
2. *Enter "000" in the extreme right box of Item 10.D(1).*
3. *Use additional sheet, enter line number from previous sheet, and enter additional code(s) in Item 10.E.*

2. PROCESS DESCRIPTION: *If a code is not listed for a process that will be used, describe the process in Item 10.D(2) or in Item 10.E(2).*

NOTE: HAZARDOUS WASTES DESCRIBED BY MORE THAN ONE EPA HAZARDOUS WASTE NUMBER - Hazardous wastes that can be described by more than one EPA Hazardous Waste Number shall be described on the form as follows:

1. *Select one of the EPA Hazardous Waste Numbers and enter it in column A. On the same line complete columns B, C and D by estimating the total annual quantity of the waste and describing all the processes to be used to treat, store, and/or dispose of the waste.*
2. *In column A of the next line enter the other EPA Hazardous Waste Number that can be used to describe the waste. In column D(2) on that line enter "included with above" and make no other entries on that line.*
3. *Repeat step 2 for each EPA Hazardous Waste Number that can be used to describe the hazardous waste.*

EXAMPLE FOR COMPLETING Item 10 (shown in line numbers X-1, X-2, X-3, and X-4 below) - A facility will treat and dispose of an estimated 900 pounds per year of chrome shavings from leather tanning and finishing operations. In addition, the facility will treat and dispose of three non-listed wastes. Two wastes are corrosive only and there will be an estimated 200 pounds per year of each waste. The other waste is corrosive and ignitable and there will be an estimated 100 pounds per year of that waste. Treatment will be in an incinerator and disposal will be in a landfill.

Line Number		A. EPA Hazardous Waste No. (Enter code)				B. Estimated Annual Quantity of Waste	C. Unit of Measure (Enter code)	D. PROCESSES (1) PROCESS CODES (Enter code)									(2) PROCESS DESCRIPTION (If a code is not entered in D(1))
X	1	K	0	5	4	900	P	T	0	3	D	8	0				
X	2	D	0	0	2	400	P	T	0	3	D	8	0				
X	3	D	0	0	1	100	P	T	0	3	D	8	0				
X	4	D	0	0	2												Included With Above

19 Description of Hazardous Wastes (*Continued; use additional sheets as necessary*)

Line Number	A. EPA Hazardous Waste No. (Enter code)	B. Estimated Annual Quantity of Waste	C. Unit of Measure (Enter code)	D. PROCESSES (1) PROCESS CODES (Enter code)								D. PROCESSES (2) PROCESS DESCRIPTION (If a code is not entered in D(1))
1	D001	553	T	S	0	1			S	0	2	
2	D004											Included with above
3	D005											Included with above
4	D006											Included with above
5	D007											Included with above
6	D008											Included with above
7	D009											Included with above
8	D010											Included with above
9	D011											Included with above
10	D018											Included with above
11	D019											Included with above
12	D021											Included with above
13	D022											Included with above
14	D023											Included with above
15	D024											Included with above
16	D025											Included with above
17	D026											Included with above
18	D027											Included with above
19	D028											Included with above
20	D029											Included with above
21	D030											Included with above
22	D032											Included with above
23	D033											Included with above
24	D034											Included with above
25	D035											Included with above
26	D036											Included with above
27	D037											Included with above
28	D038											Included with above
29	D039											Included with above
30	D040											Included with above
31	D041											Included with above
32	D042											Included with above
33	D043											Included with above

10. Description of Hazardous Wastes (*Continued; Additional Sheet*)

Line Number	A. EPA Hazardous Waste No. (Enter code)	B. Estimated Annual Quantity of Waste	C. Unit of Measure (Enter code)	E. PROCESSES (1) PROCESS CODES (Enter code)	E. PROCESSES (2) PROCESS DESCRIPTION (If a code is not entered in E(1))
34	F002	75	T	S01	
35	F003	100	T	S01	
36	F005				Included with above

11. Map (See instructions on page 38)

Attach to this application a topographic map, or other equivalent map, of the area extending to at least one mile beyond property boundaries. The map must show the outline of the facility, the location of each of its existing and proposed intake and discharge structures, each of its hazardous waste treatment, storage, or disposal facilities, and each well where it injects fluids underground. Include all springs, rivers and other surface water bodies in this map area. See instructions for precise requirements.

12. Facility Drawing (See instructions on page 39)

All existing facilities must include a scale drawing of the facility (see instructions for more detail).

13. Photographs (See instructions on page 39)

All existing facilities must include photographs (aerial or ground-level) that clearly delineate all existing structures; existing storage, treatment and disposal areas; and sites of future storage, treatment or disposal areas (see instructions for more detail).

14. Comments (See instructions on page 39)

FLAMMABLE MATERIAL STORAGE SHELTER AND WASTE ANTIFREEZE TANK

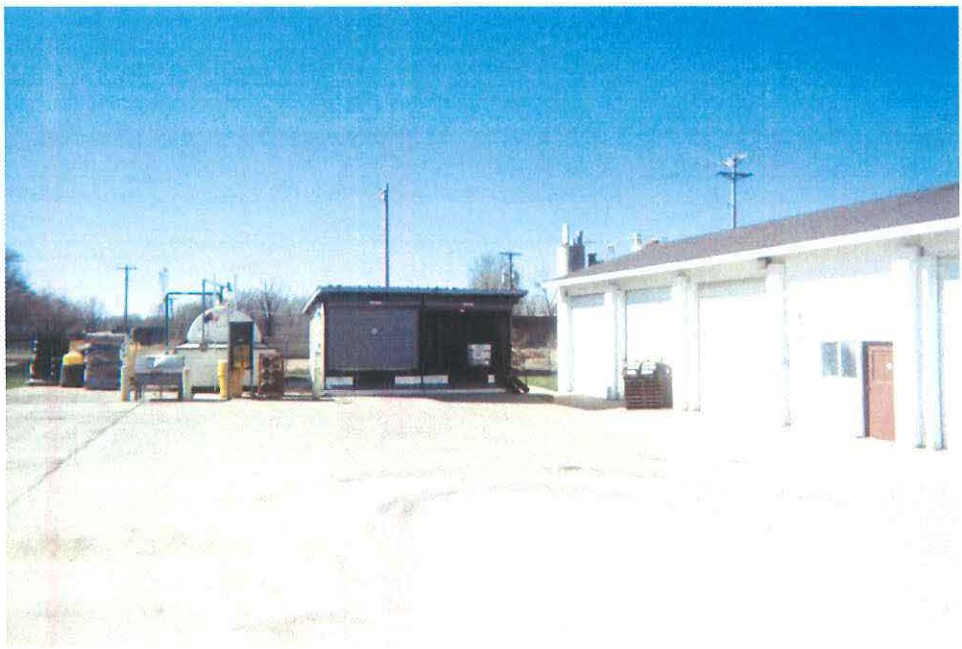

SOUTH VIEW

SOUTHWEST VIEW

PROPOSED CONTAINER STORAGE AREA

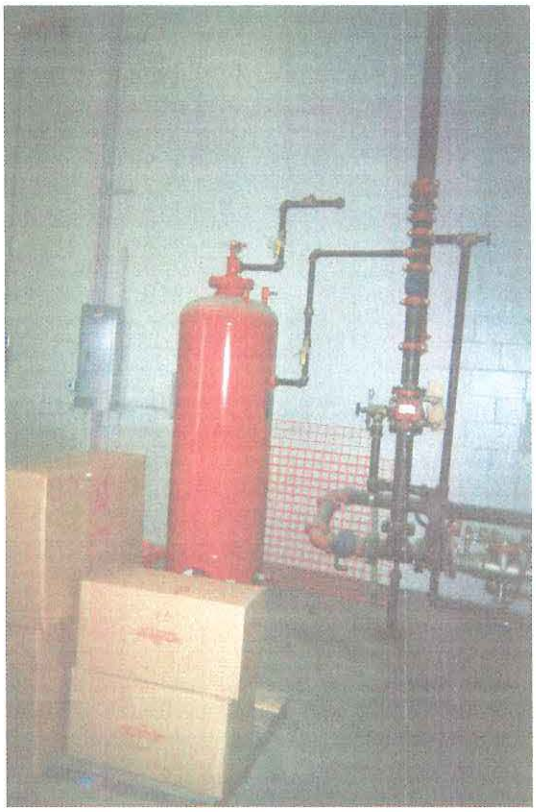

NORTH VIEW (FIRE SUPPRESSION SYSTEM)

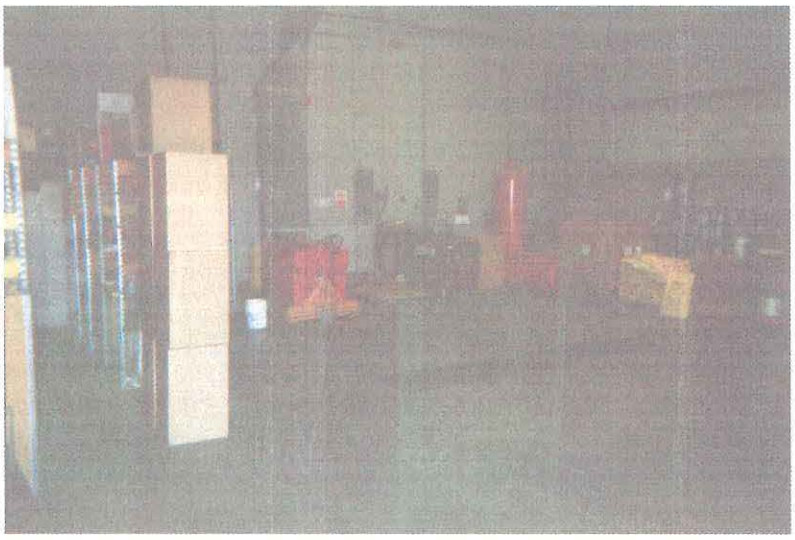

NORTHEAST VIEW

PROPOSED CONTAINER STORAGE AREA (CONT'D)

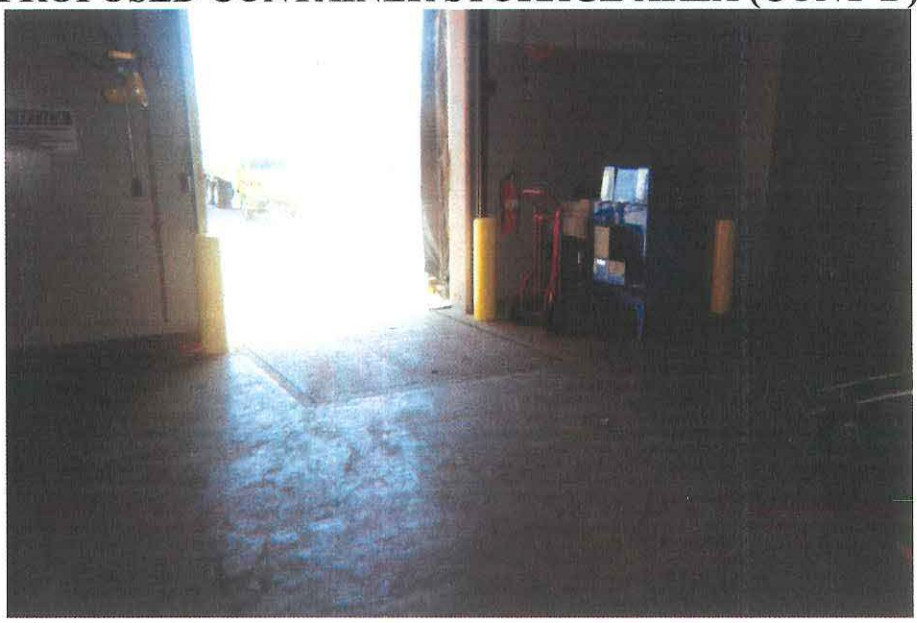

SOUTH/SOUTHWEST VIEW

NORTH WEST VIEW

MINERAL SPIRITS TANK FARM

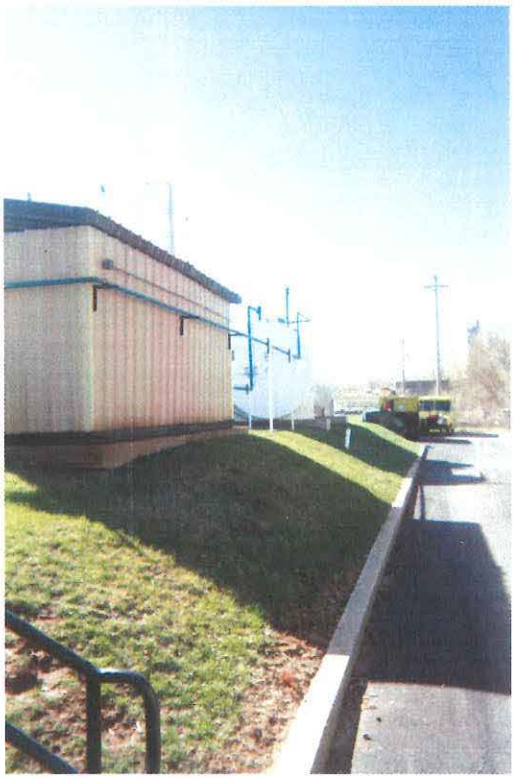

SOUTH VIEW

SOUTH VIEW

PROPOSED RETURN AND FILL AREA

NORTHEAST VIEW

NORTHEAST VIEW

PROPOSED RETURN AND FILL (CONT'D)

NORTH/NORTHEAST VIEW

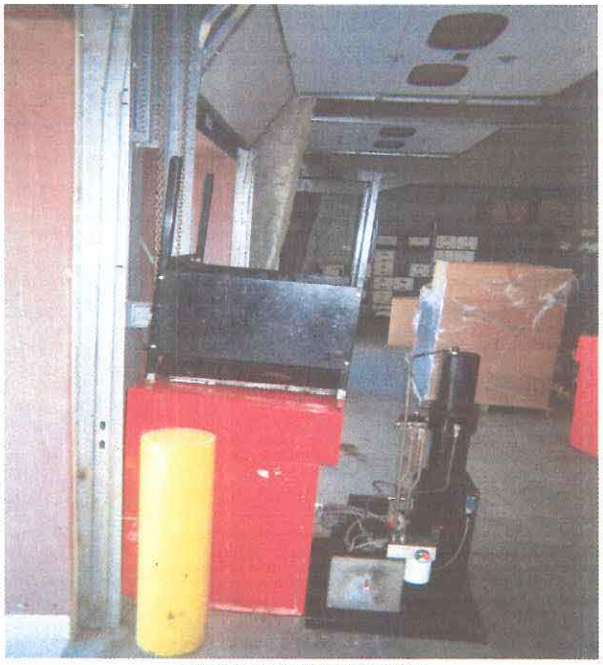

NORTH VIEW

PROPOSED RETURN AND FILL (CONT'D)

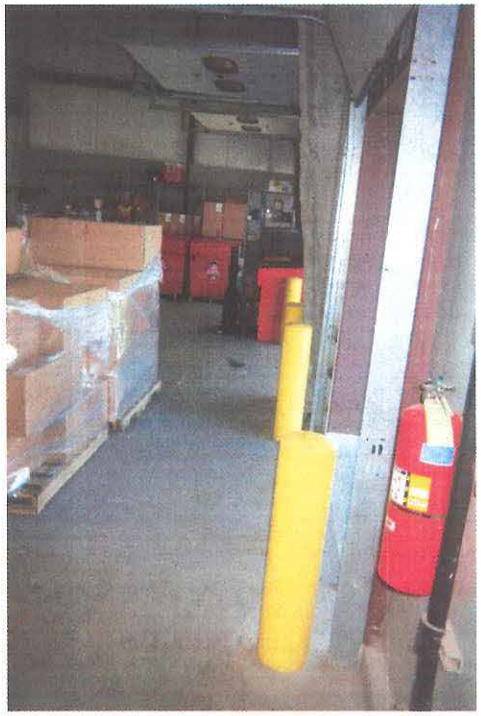

SOUTH VIEW

NORTH VIEW

WEST VIEW

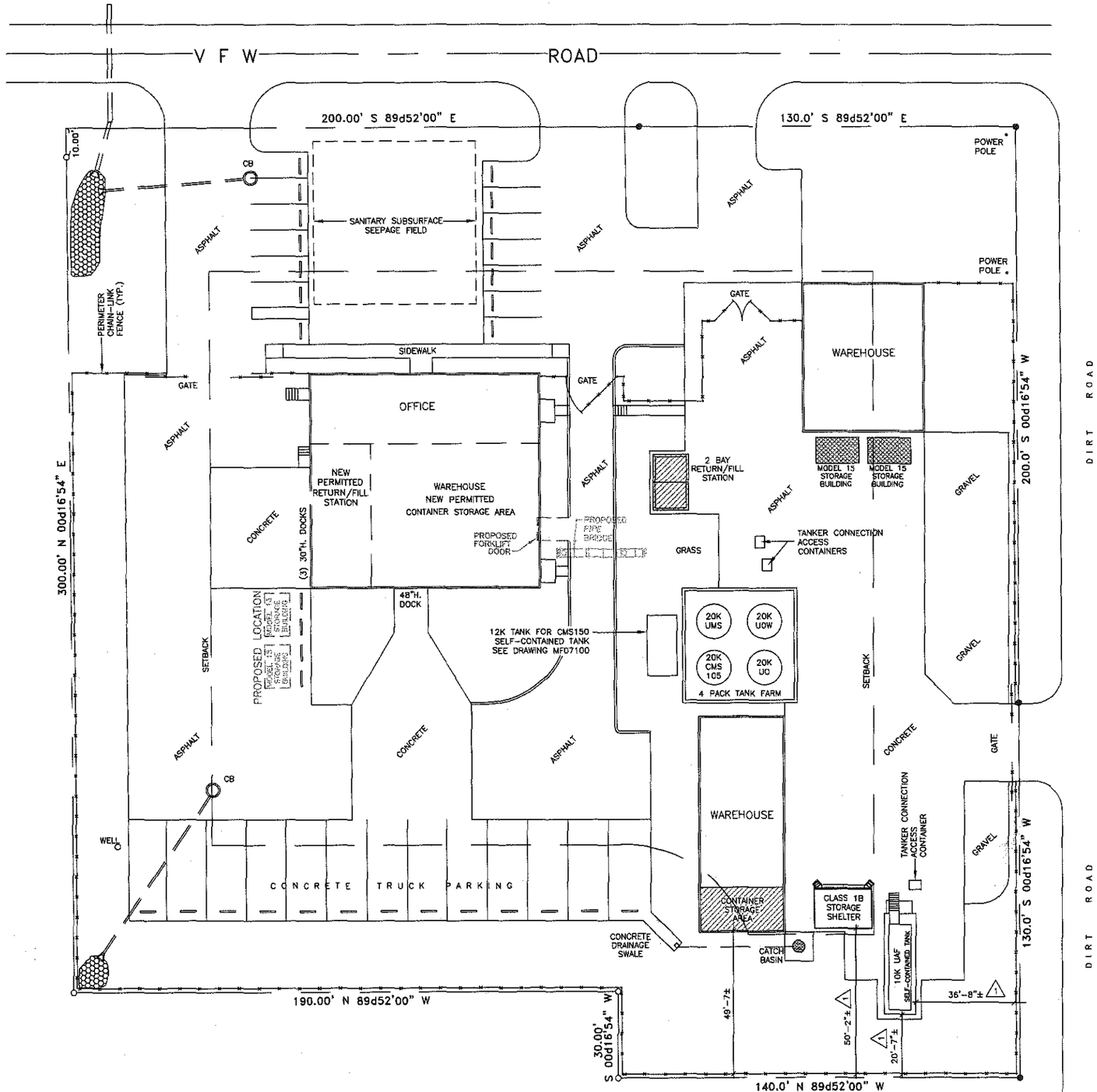

SITE PLAN

EXPLANATION

- UNIT TO BE CLOSED
- UNIT TO BE MOVED
- PROPOSED FUTURE EQUIPMENT LOCATION

signature

4/28/03
date

A TriHydro Corporation representative conducted an on-site field inspection to verify, equipment, components, dimensions and existing conditions on April 10, 2003. Items inaccessible to visual observations were not field verified during this inspection. Revisions to these drawings (based on the inspection) were coordinated through the Safety-Kleen Engineering Department, as necessary.

TriHydro Corporation
Engineering and Environmental Consulting
920 Sheridan Street
Laramie, Wyoming 82070

GENERAL NOTES

1. INDICATES AS BUILT MEASUREMENT OR FIELD VERIFICATION OF EXISTING CONDITION 3-11-93.
2. SITE DETAILS AS INDICATED WERE FIELD VERIFIED 1-24-03.

PROPRIETARY STATEMENT

THIS DRAWING IS THE EXCLUSIVE PROPERTY OF SAFETY-KLEEN CORP. AND IS PROPRIETARY AND CONFIDENTIAL INFORMATION. THIS DRAWING AND THE INFORMATION CONTAINED THEREIN MUST NOT BE DUPLICATED, USED, DIVULGED, REPRODUCED, COPIED, DISCLOSED OR APPROPRIATED IN WHOLE OR IN PART FOR ANY PURPOSE OTHER THAN AS EXPRESSLY AUTHORIZED BY SAFETY-KLEEN CORP. THIS DRAWING MUST BE RETURNED PROMPTLY UPON REQUEST.

Project Solutions Companies
1390 Boone Industrial Drive • Suite 200 • Columbia • MO 65202
• Phone: (573) 443-7100 • Fax: (573) 443-7181 •

NO.	DESCRIPTION	BY	CHK	APPR	DATE
B	REVISED FOR PART B	JEK	KLS	KLS	021703
A	UPDATE SITE PER NEW OFFICE/WAREHOUSE	CWM	GPM		100593

REVISIONS

TITLE
EXISTING SITE PLAN

SAFETY-KLEEN CORP.
1000 N. RANDALL ROAD ELGIN, ILLINOIS 60123 PHONE 708-697-6460

SCALE	BY	CHKD	APPROVED	OPERATIONS	DATE
1" = 20'-0"	R.D.	–	–	–	10/2/91

SERVICE CENTER LOCATION	SC-DWG. NO.-REV. NO.	SHEET NO.
PEKIN, IL.	513601-0002	B

10-4-93 9:06 pm -01 .DWG 9341.20

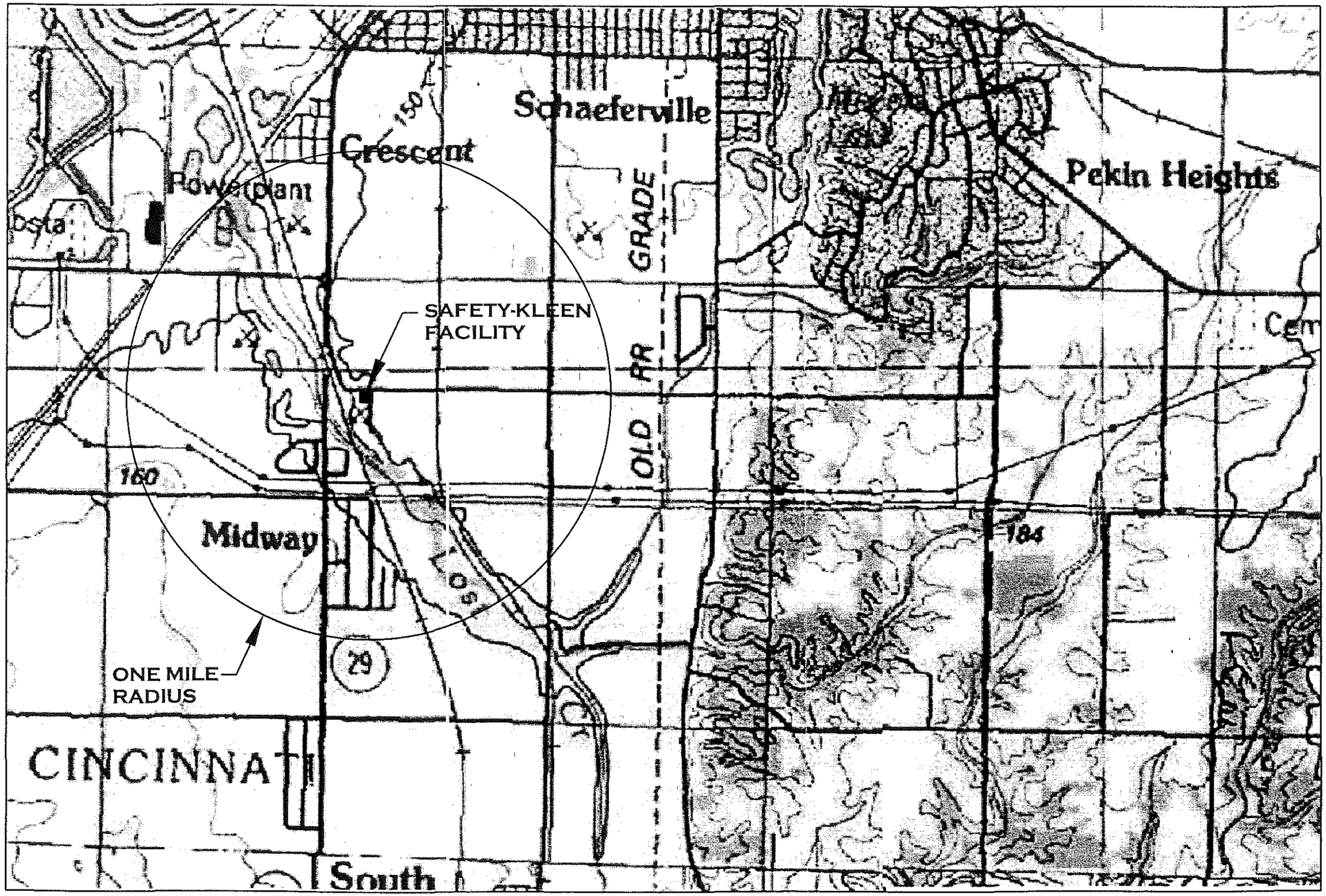

GENERAL NOTES

THIS DRAWING CONTAINS INFORMATION PROPRIETARY TO SAFETY-KLEEN CORPORATION. ANY REPRODUCTION, DISCLOSURE OR USE OF THIS DRAWING IS EXPRESSLY PROHIBITED EXCEPT BY SAFETY-KLEEN OR AS SAFETY-KLEEN MAY AGREE IN WRITING.

NO.	DESCRIPTION	BY	CHK	APPR	DATE

REVISIONS

TITLE

TOPOGRAPHIC MAP (1998)

SAFETY-KLEEN CORP.

777 BIG TIMBER ROAD ELGIN, ILLINOIS 60123 PHONE 708-697-6450

SCALE	BY	CHKD	P.M. APPR.	OP. APPR	DATE
NONE	JEK	-	KLS	-	2-14-03

SERVICE CENTER LOCATION	SC-DWG NUMBER	REV. NO.
PEKIN, IL	FIGURE B-4	

05-04-92

APPENDIX B
PROCESS FLOW DIAGRAMS

Figure B-1
Handling Process for Spent Mineral Spirits

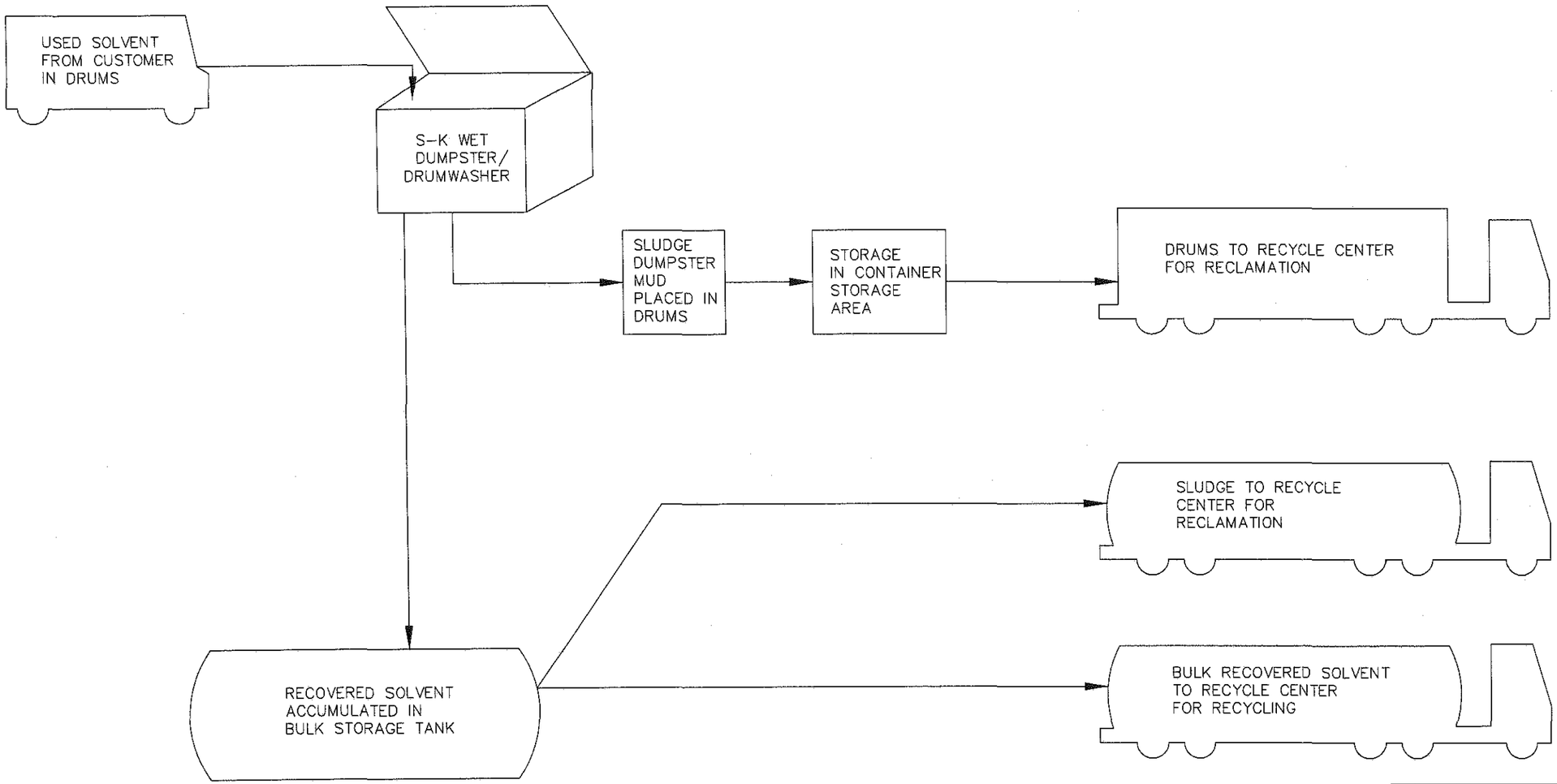

Project Solutions Companies

1390 Boone Industrial Drive • Suite 200 • Columbia • MO 65202
• Phone: (573) 443-7100 • Fax: (573) 443-7181 •

TITLE

FIGURE B-1
HANDLING PROCESS FOR
SPENT MINERAL SPIRITS

SAFETY-KLEEN CORP.
777 BIG TIMBER ROAD ELGIN, ILLINOIS 60123 PHONE 708-697-8460

SCALE	BY	CHKD	P.E. APPR	OP. APPR	DATE
NONE	PROJSOL				2-5-03

SERVICE CENTER LOCATION	SC-DWG-REV NO.	SHEET NO.
STANDARD	BSD 940	

7-15-92 1:00pm MF063020.DWG

Figure B-2
Solvent Use and Regeneration Loop

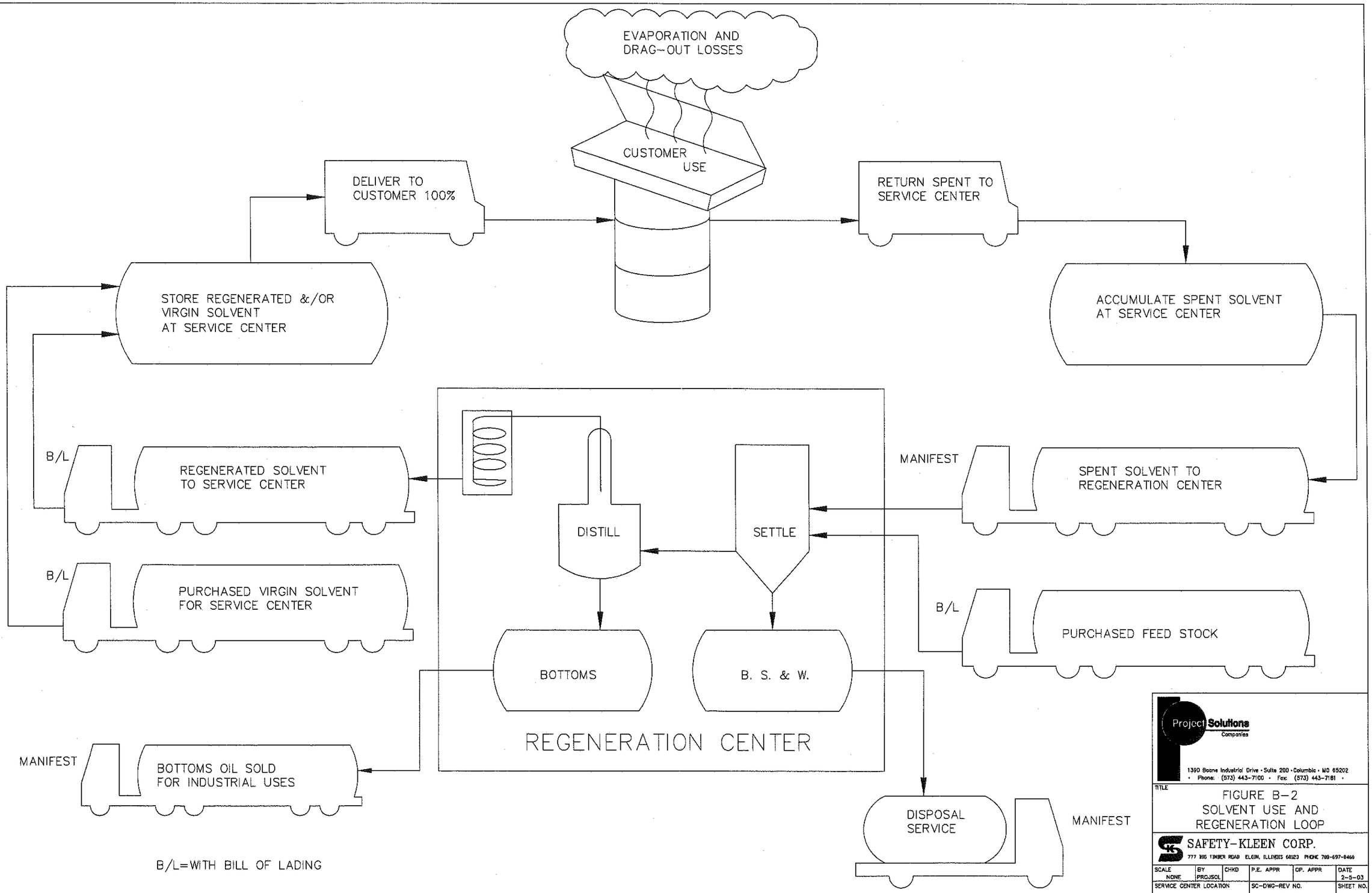
EVAPORATION AND
DRAG-OUT LOSSES
CUSTOMER
USE
DELIVER TO
CUSTOMER 100%
RETURN SPENT TO
SERVICE CENTER
STORE REGENERATED &/OR
VIRGIN SOLVENT
AT SERVICE CENTER
ACCUMULATE SPENT SOLVENT
AT SERVICE CENTER
B/L
REGENERATED SOLVENT
TO SERVICE CENTER
MANIFEST
SPENT SOLVENT TO
REGENERATION CENTER
DISTILL
SETTLE
B/L
PURCHASED VIRGIN SOLVENT
FOR SERVICE CENTER
B/L
PURCHASED FEED STOCK
BOTTOMS
B. S. & W.
REGENERATION CENTER
MANIFEST
BOTTOMS OIL SOLD
FOR INDUSTRIAL USES
DISPOSAL
SERVICE
MANIFEST
B/L=WITH BILL OF LADING
Project Solutions
Companies
1390 Boone Industrial Drive • Suite 200 • Columbia • MO 65202
• Phone: (573) 443-7100 • Fax: (573) 443-7181 •
TITLE
FIGURE B-2
SOLVENT USE AND
REGENERATION LOOP
SAFETY-KLEEN CORP.
777 BIG TIMBER ROAD ELGIN, ILLINOIS 60123 PHONE 708-697-8460
SCALE NONE
BY PRCJSOL
CHKD
P.E. APPR
OP. APPR
DATE 2-5-03
SERVICE CENTER LOCATION STANDARD
SC-DWG-REV NO. BSD 941
SHEET NO.
2-5-03 1:00pm BSD 940

Figure B-2a
Unit Process For Handling Bulk Antifreeze

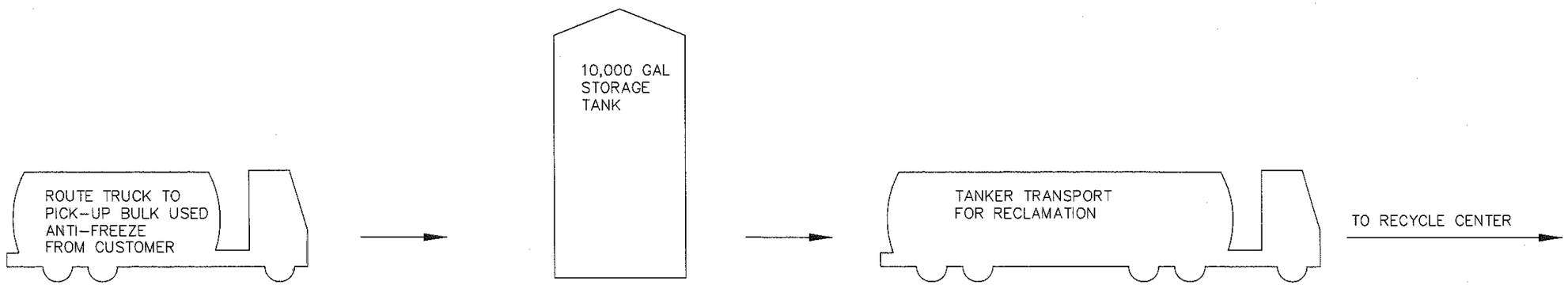

Project Solutions Companies
1390 Boone Industrial Drive • Suite 200 • Columbia • MO 65202
• Phone: (573) 443-7100 • Fax: (573) 443-7161 •

TITLE

FIGURE B-2A
UNIT PROCESS FOR HANDLING
BULK ANTI-FREEZE WASTE

SAFETY-KLEEN CORP.
777 BIG TIMBER ROAD ELGIN, ILLINOIS 60123 PHONE 708-697-8460

SCALE	BY	CHKD	P.E. APPR	OP. APPR	DATE
NONE	PROJSOL				2-5-03

SERVICE CENTER LOCATION	SC-DWG-REV NO.	SHEET NO.
STANDARD	BSD 942	

2-5-03 1:00pm BSD 940

Figure B-3
Unit Process For Handling Spent Immersion Cleaner, Dry Cleaning Waste and Paint Waste

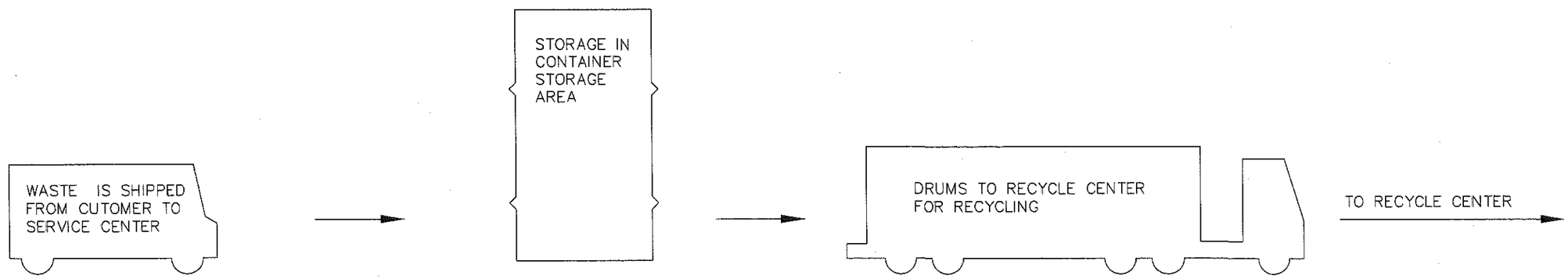

Project Solutions Companies

1380 Boone Industrial Drive • Suite 200 • Columbia • MO 65202
• Phone: (573) 443-7100 • Fax: (573) 443-7181 •

TITLE

FIGURE B-3
UNIT PROCESS FOR HANDLING WASTE IN CONTAINERS

SAFETY-KLEEN CORP.
777 BIG TIMBER ROAD ELGIN, ILLINOIS 60123 PHONE 708-697-8460

SCALE	BY	CHKD	P.E. APPR	OP. APPR	DATE
NONE	PROJSOL				2-5-03

SERVICE CENTER LOCATION	SC-DWG-REV NO.	SHEET NO.
STANDARD	BSD 943	

2-5-03 1:00pm BSD 940

Figure B-4
Topographic Map

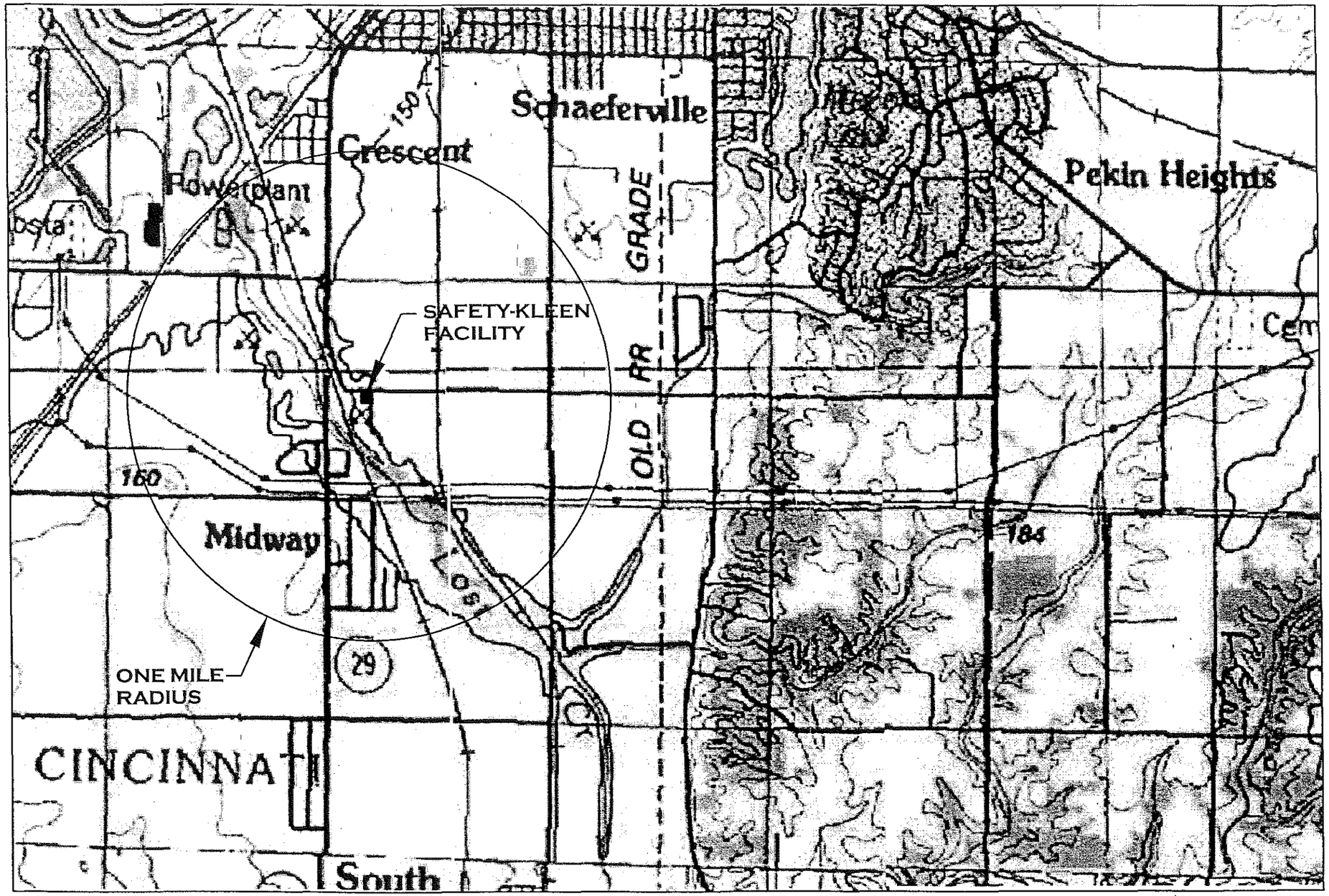

GENERAL NOTES

THIS DRAWING CONTAINS INFORMATION PROPRIETARY TO SAFETY-KLEEN CORPORATION. ANY REPRODUCTION, DISCLOSURE OR USE OF THIS DRAWING IS EXPRESSLY PROHIBITED EXCEPT BY SAFETY-KLEEN OR AS SAFETY-KLEEN MAY AGREE IN WRITING.

TITLE

TOPOGRAPHIC MAP (1998)

SAFETY-KLEEN CORP.

777 BIG TIMBER ROAD ELGIN, ILLINOIS 60123 PHONE 708-697-6460

NO.	DESCRIPTION	BY	CHK	APPR	DATE

REVISIONS

SCALE	BY	CHKD	P.M. APPR.	OP. APPR	DATE
NONE	JEK	–	KLS	–	2-14-03

SERVICE CENTER LOCATION	SC-DWG NUMBER	REV. NO.
PEKIN, IL	FIGURE B-4	

Figure B-5
Site Location Map

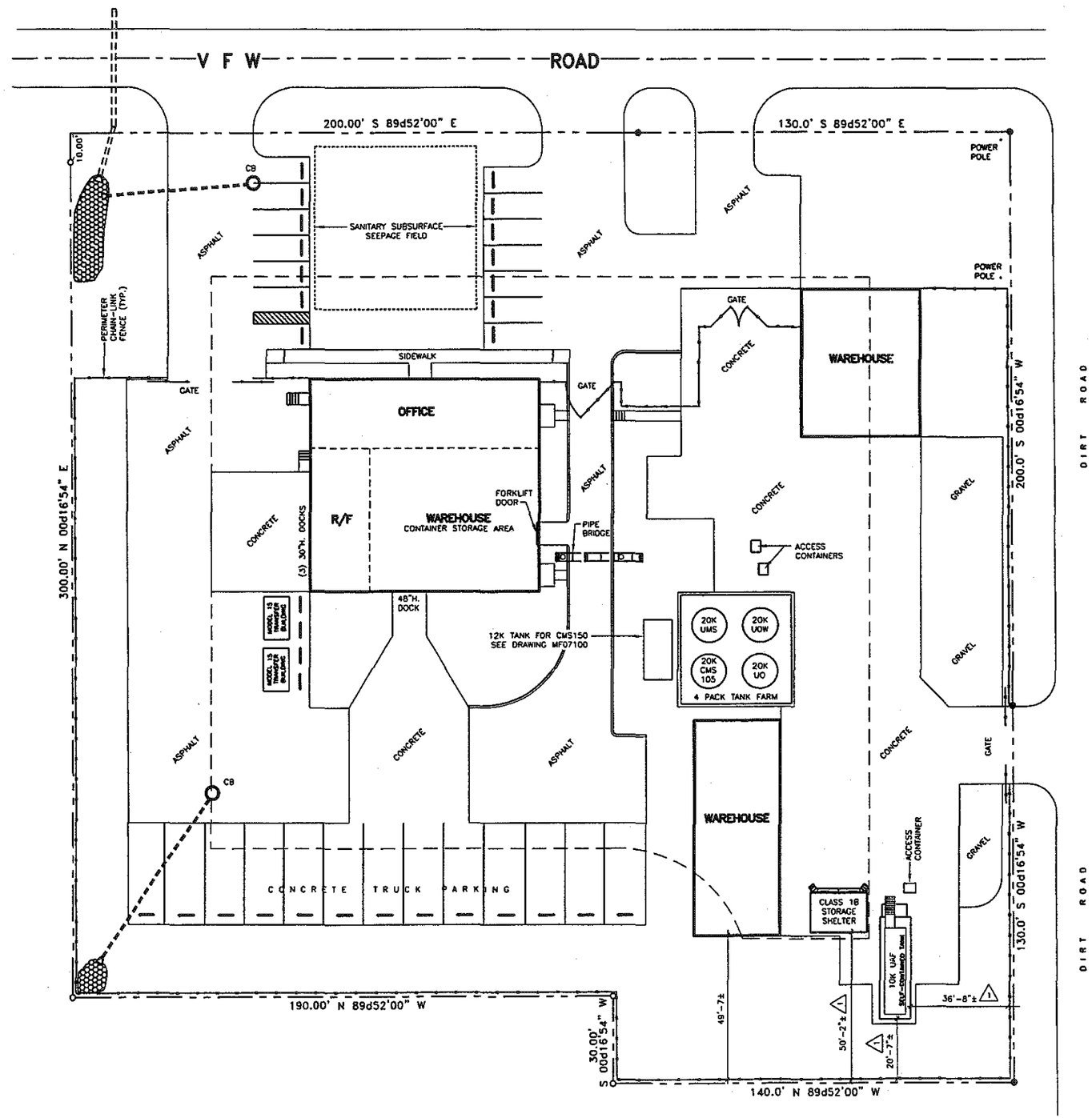

SITE PLAN

0 10 20 40 60

GENERAL NOTES

1. INDICATES AS BUILT MEASUREMENT OR FIELD VERIFICATION OF EXISTING CONDITION 3-11-93.
2. SITE DETAILS AS INDICATED WERE FIELD VERIFIED 1-24-03.

PROPRIETARY STATEMENT

THIS DRAWING IS THE EXCLUSIVE PROPERTY OF SAFETY-KLEEN CORP. AND IS PROPRIETARY AND CONFIDENTIAL INFORMATION. THIS DRAWING AND THE INFORMATION CONTAINED THEREIN MUST NOT BE DUPLICATED, USED, DIVULGED, REPRODUCED, COPIED, DISCLOSED OR APPROPRIATED IN WHOLE OR IN PART FOR ANY PURPOSE OTHER THAN AS EXPRESSLY AUTHORIZED BY SAFETY-KLEEN CORP. THIS DRAWING MUST BE RETURNED PROMPTLY UPON REQUEST.

Project Solutions Companies
1390 Boone Industrial Drive · Suite 200 · Columbia · MO 65202
· Phone: (573) 443-7100 · Fax: (573) 443-7181 ·

TITLE

EXISTING SITE PLAN

NO.	DESCRIPTION	BY	CHK	APPR	DATE
B	REVISED FOR PART B	JCK	KLS	KLS	021703
A	UPDATE SITE PER NEW OFFICE/WAREHOUSE	CWW	GPM		100593

REVISIONS

SAFETY-KLEEN CORP.
1000 N. RANDALL ROAD ELGIN, ILLINOIS 60123 PHONE 708-697-8460

SCALE	BY	CHKD	APPROVED	OPERATIONS	DATE
1" = 20'-0"	R.D.	–	–	–	10/2/91

SERVICE CENTER LOCATION	SC-DWG. NO.-REV. NO.	SHEET NO.
PEKIN, IL	513601-0002	B

Figure B-6
Zoning Map

Figure B-8
Wind Rose – Peoria, Illinois

WIND ROSE PLOT

Station #14842 - PEORIA/GREATER PEORIA ARPT, IL

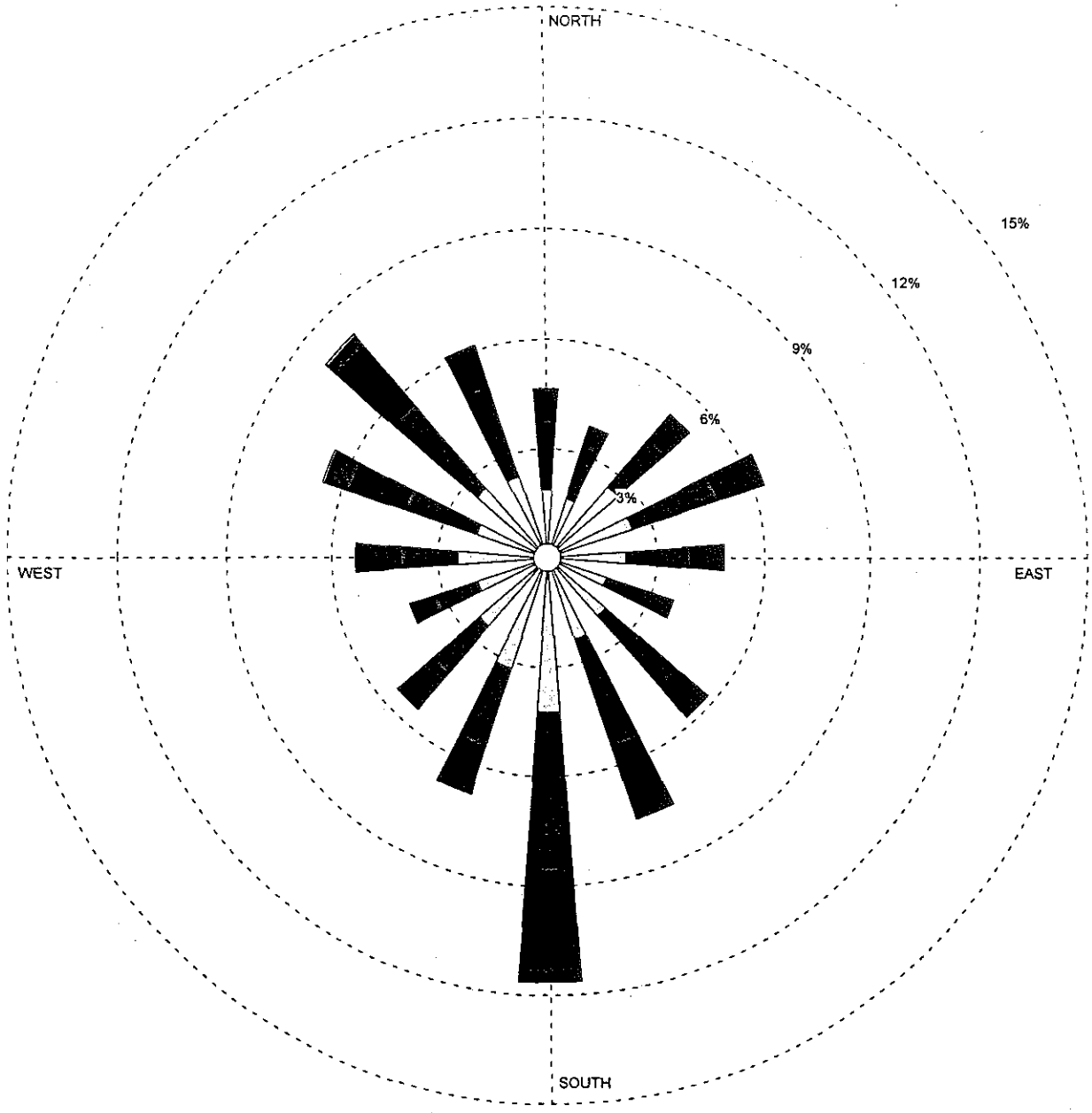

Wind Speed (m/s)	MODELER	DATE	COMPANY NAME
> 11.06 8.49 - 11.06 5.40 - 8.49 3.34 - 5.40 1.80 - 3.34 0.51 - 1.80	JEK-PROJSOLCO	2/18/03	SAFETY-KLEEN CORP. PEKIN, IL. SVC. CTR.
	DISPLAY Wind Speed	UNIT m/s	COMMENTS WIND ROSE PEORIA, IL. 1992
	AVG. WIND SPEED 4.18 m/s	CALM WINDS 3.93%	
	ORIENTATION Direction (blowing from)	PLOT YEAR-DATE-TIME 1992 Jan 1 - Dec 31 Midnight - 11 PM	PROJECT/PLOT NO. FIGURE B-8

WRPLOT View 3.5 by Lakes Environmental Software - www.lakes-environmental.com

Figure B-10
Flood Plain Map

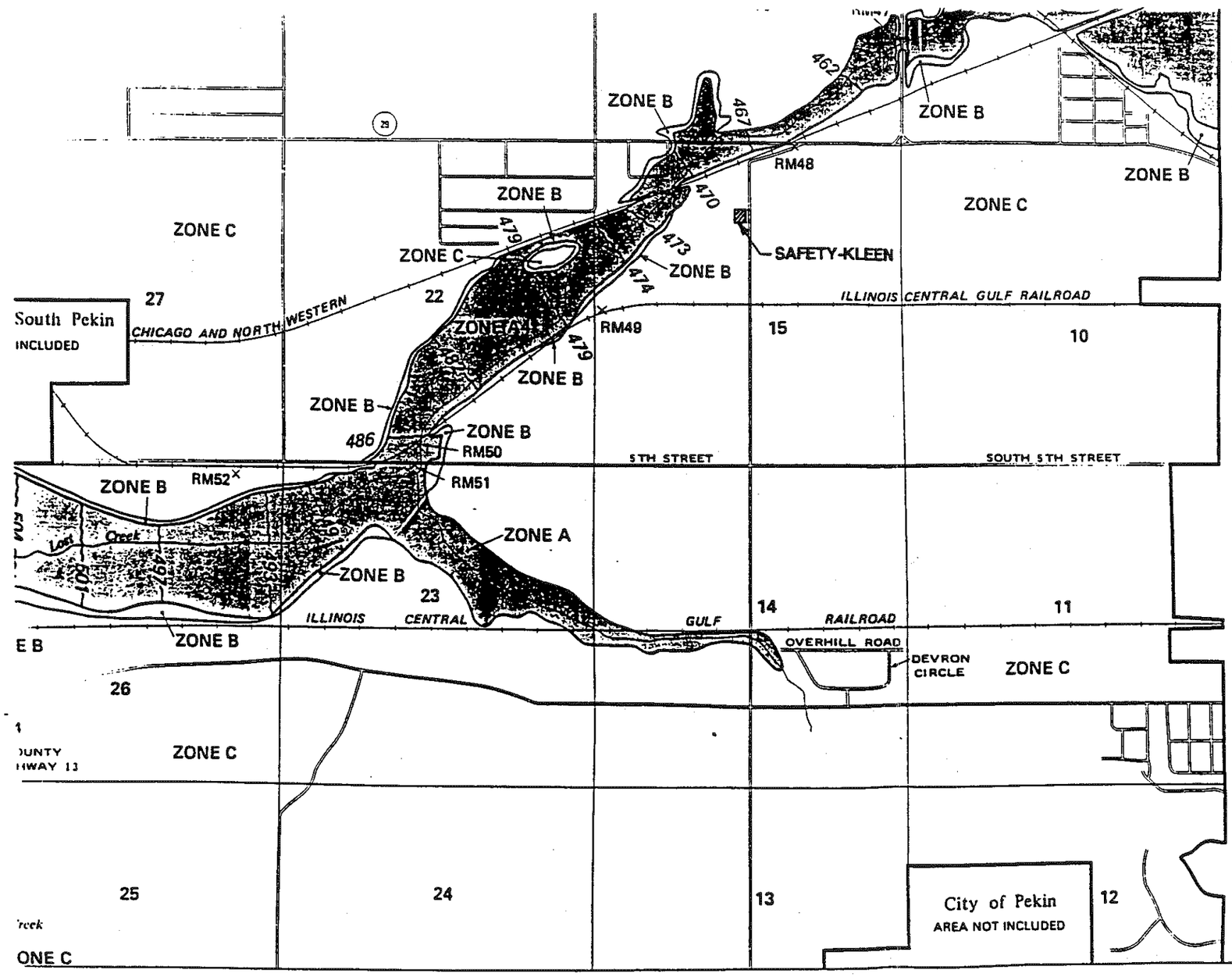

KEY TO MAP

500-Year Flood Boundary	
100-Year Flood Boundary	ZONE B
Zone Designations* With Date of Identification e.g., 12/2/74	ZONE A 12/2/74
100-Year Flood Boundary	ZONE B
500-Year Flood Boundary	
Base Flood Elevation Line With Elevation In Feet**	513
Base Flood Elevation in Feet Where Uniform Within Zone**	(EL 987)
Elevation Reference Mark	RM7 ×
River Mile	• M1.5

**Referenced to the National Geodetic Vertical Datum of 1929

*EXPLANATION OF ZONE DESIGNATIONS

ZONE	EXPLANATION
A	Areas of 100-year flood; base flood elevations and flood hazard factors not determined.
AO	Areas of 100-year shallow flooding where depths are between one (1) and three (3) feet; average depths of inundation are shown, but no flood hazard factors are determined.
AH	Areas of 100-year shallow flooding where depths are between one (1) and three (3) feet; base flood elevations are shown, but no flood hazard factors are determined.
A1-A30	Areas of 100-year flood; base flood elevations and flood hazard factors determined.
A99	Areas of 100-year flood to be protected by flood protection system under construction; base flood elevations and flood hazard factors not determined.
B	Areas between limits of the 100-year flood and 500-year flood; or certain areas subject to 100-year flooding with average depths less than one (1) foot or where the contributing drainage area is less than one square mile; or areas protected by levees from the base flood. (Medium shading)
C	Areas of minimal flooding. (No shading)
D	Areas of undetermined, but possible, flood hazards.
V	Areas of 100-year coastal flood with velocity (wave action); base flood elevations and flood hazard factors not determined.
V1-V30	Areas of 100-year coastal flood with velocity (wave action); base flood elevations and flood hazard factors determined.

NOTES TO USER

Certain areas not in the special flood hazard areas (zones A and V) may be protected by flood control structures.

This map is for flood insurance purposes only; it does not necessarily show all areas subject to flooding in the community or all planimetric features outside special flood hazard areas.

For adjoining map panels, see separately printed Index To Map Panels.

INITIAL IDENTIFICATION: JUNE 2, 1978

FLOOD HAZARD BOUNDARY MAP REVISIONS:

SOURCE:

NATIONAL FLOOD INSURANCE PROGRAM

FIRM
FLOOD INSURANCE RATE MAP

COUNTY OF
TAZEWELL,
ILLINOIS
(UNINCORPORATED AREAS)

PANEL 100 OF 250

COMMUNITY-PANEL NUMBER
170815 0100 B

EFFECTIVE DATE:
AUGUST 1, 1980

U.S. DEPARTMENT OF HOUSING

SAFETY-KLEEN CORP. SERVICE CENTER
PEKIN, ILLINOIS

FIGURE B-10
FLOOD PLAIN MAP

Prepared for:
SAFETY-KLEEN CORP.
777 BIG TIMBER ROAD
ELGIN ILLINOIS 60120

By:
PRC ENVIRONMENTAL MANAGEMENT, INC.

Figure B-11
Traffic Pattern for Antifreeze Tank

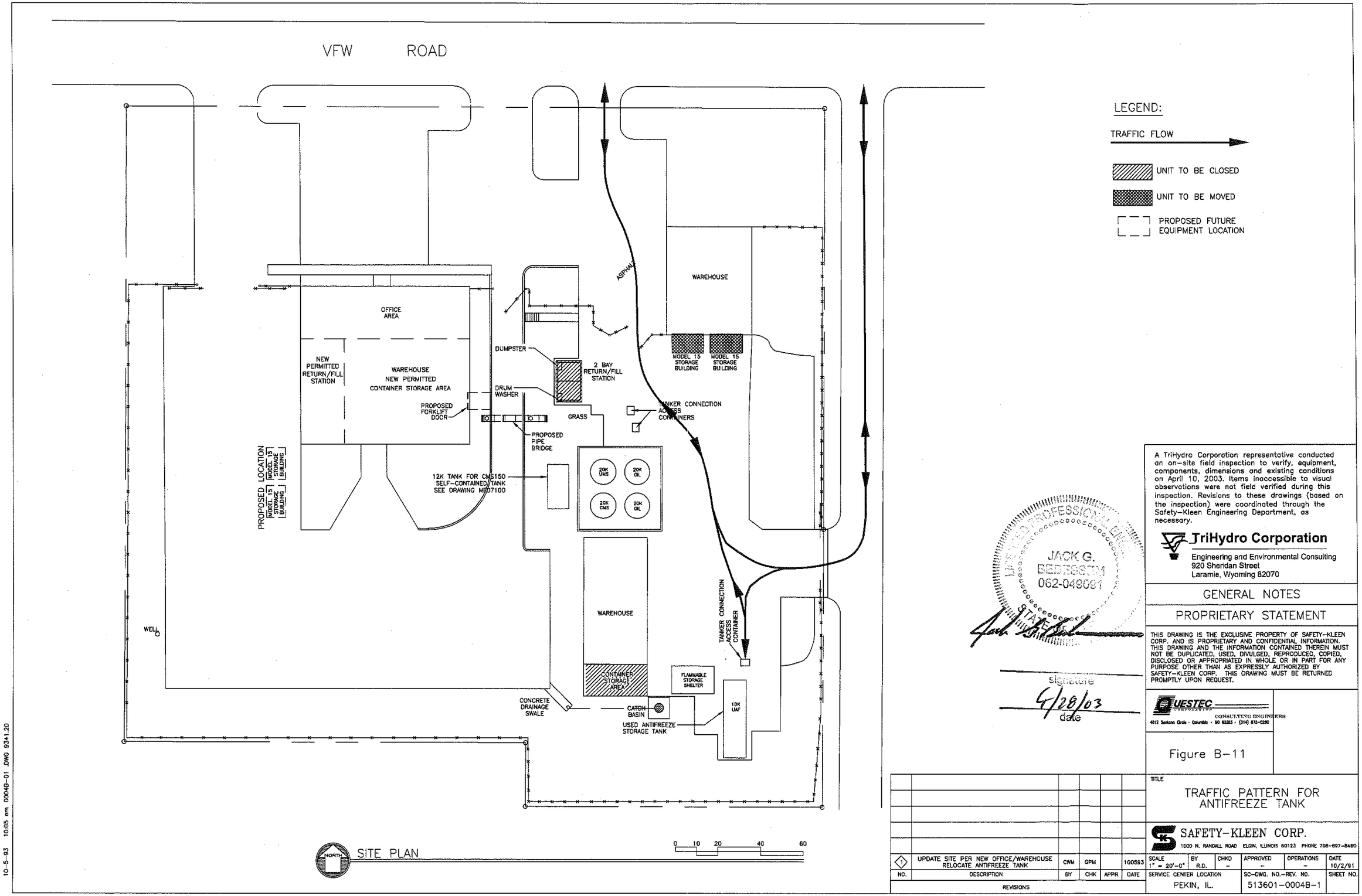

A TriHydro Corporation representative conducted an on-site field inspection to verify, equipment, components, dimensions and existing conditions on April 10, 2003. Items inaccessible to visual observations were not field verified during this inspection. Revisions to these drawings (based on the inspection) were coordinated through the Safety-Kleen Engineering Department, as necessary.

TriHydro Corporation
Engineering and Environmental Consulting
920 Sheridan Street
Laramie, Wyoming 82070

LICENSED PROFESSIONAL ENGINEER
JACK G. BEDESSEM
062-049091
STATE OF WYOMING

signature
4/28/03
date

GENERAL NOTES

PROPRIETARY STATEMENT

THIS DRAWING IS THE EXCLUSIVE PROPERTY OF SAFETY-KLEEN CORP. AND IS PROPRIETARY AND CONFIDENTIAL INFORMATION. THIS DRAWING AND THE INFORMATION CONTAINED THEREIN MUST NOT BE DUPLICATED, USED, DIVULGED, REPRODUCED, COPIED, DISCLOSED OR APPROPRIATED IN WHOLE OR IN PART FOR ANY PURPOSE OTHER THAN AS EXPRESSLY AUTHORIZED BY SAFETY-KLEEN CORP. THIS DRAWING MUST BE RETURNED PROMPTLY UPON REQUEST.

QUESTEC CORPORATION
CONSULTING ENGINEERS
4812 Santana Circle · Columbia · MO 65203 · (314) 875-0280

Figure B-11

TITLE
TRAFFIC PATTERN FOR ANTIFREEZE TANK

SAFETY-KLEEN CORP.
1000 N. RANDALL ROAD ELGIN, ILLINOIS 60123 PHONE 708-697-8460

NO.	DESCRIPTION	BY	CHK	APPR	DATE
1	UPDATE SITE PER NEW OFFICE/WAREHOUSE RELOCATE ANTIFREEZE TANK	CWM	GPM		100593

REVISIONS

SCALE	BY	CHKD	APPROVED	OPERATIONS	DATE
1" = 20'-0"	R.D.	-	-	-	10/2/91

SERVICE CENTER LOCATION	SC-DWG. NO.-REV. NO.	SHEET NO.
PEKIN, IL.	513601-0004B-1	

10-5-93 10:05 am 0004B-01 .DWG 9341.20

Figure B-12
Traffic Pattern for 4-Pack Tank Farm

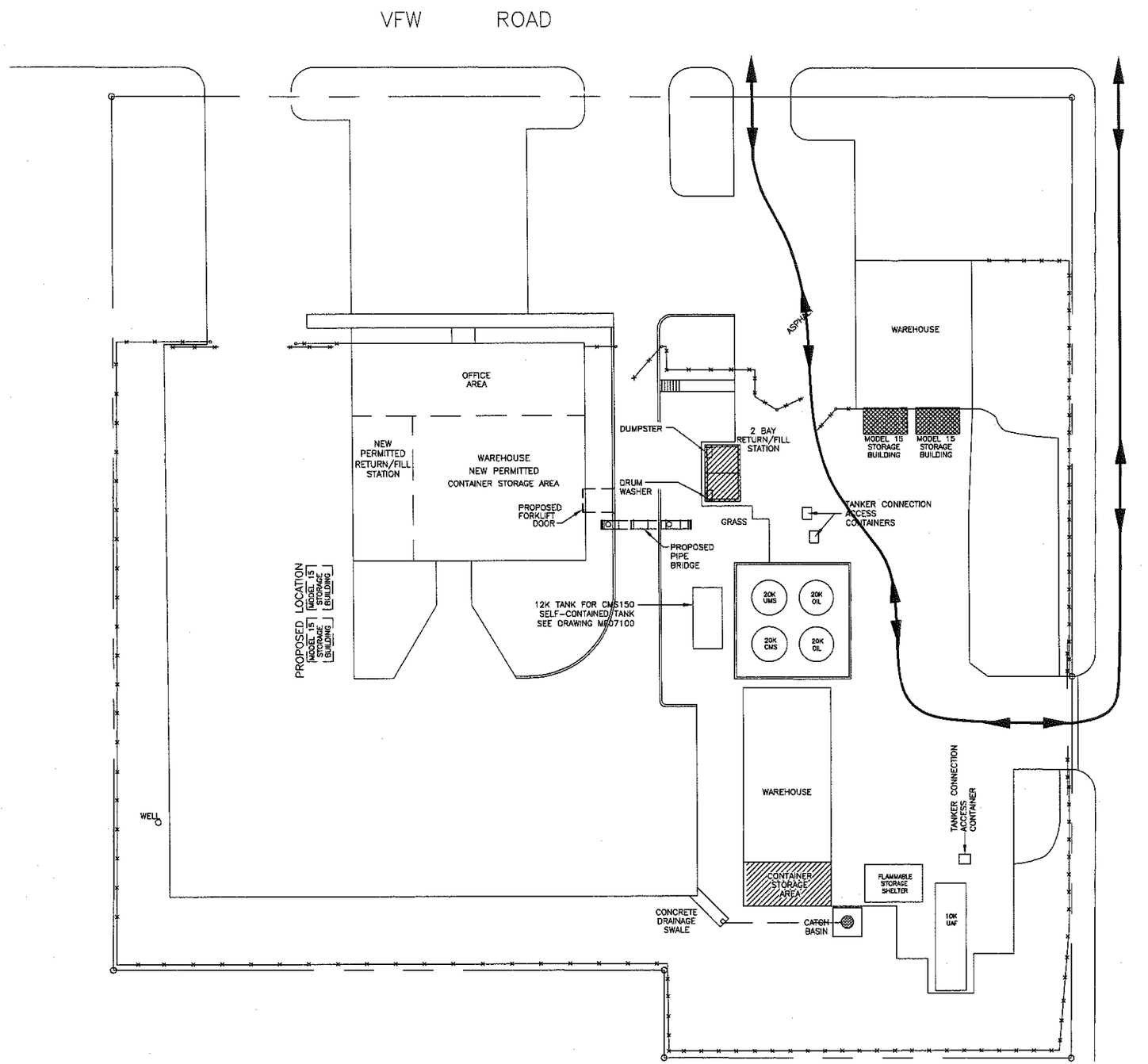

SITE PLAN

LEGEND:

TRAFFIC FLOW

UNIT TO BE CLOSED

UNIT TO BE MOVED

PROPOSED FUTURE EQUIPMENT LOCATION

A TriHydro Corporation representative conducted an on-site field inspection to verify, equipment, components, dimensions and existing conditions on April 10, 2003. Items inaccessible to visual observations were not field verified during this inspection. Revisions to these drawings (based on the inspection) were coordinated through the Safety-Kleen Engineering Department, as necessary.

TriHydro Corporation
Engineering and Environmental Consulting
920 Sheridan Street
Laramie, Wyoming 82070

GENERAL NOTES

PROPRIETARY STATEMENT

THIS DRAWING IS THE EXCLUSIVE PROPERTY OF SAFETY-KLEEN CORP. AND IS PROPRIETARY AND CONFIDENTIAL INFORMATION. THIS DRAWING AND THE INFORMATION CONTAINED THEREIN MUST NOT BE DUPLICATED, USED, DIVULGED, REPRODUCED, COPIED, DISCLOSED OR APPROPRIATED IN WHOLE OR IN PART FOR ANY PURPOSE OTHER THAN AS EXPRESSLY AUTHORIZED BY SAFETY-KLEEN CORP. THIS DRAWING MUST BE RETURNED PROMPTLY UPON REQUEST.

LICENSED PROFESSIONAL ENGINEER JACK G. BEDSORTM 062-049091 STATE OF ILLINOIS

signature

4/28/03
date

QUESTEC CONSULTING ENGINEERS
4612 Sanford Circle • Columbia • MO 65203 • (314) 875-0280

Figure B-12

NO.	DESCRIPTION	BY	CHK	APPR	DATE
1	UPDATE SITE PER NEW OFFICE WAREHOUSE	CWM	GPM		100593

REVISIONS

TITLE
TRAFFIC PATTERN FOR FOUR PACK TANKFARM

SAFETY-KLEEN CORP.
1000 N. RANDALL ROAD ELGIN, ILLINOIS 60123 PHONE 708-697-8460

SCALE	BY	CHKD	APPROVED	OPERATIONS	DATE
1" = 20'-0"	R.D.	-	-	-	10/2/91

SERVICE CENTER LOCATION	SC-DWG. NO.-REV. NO.	SHEET NO.
PEKIN, IL.	513601-0005B-1	

10-5-93 9:58 am B-01 .DWG 9341.20

Figure B-13
Traffic Pattern for Flammable Storage Shelter

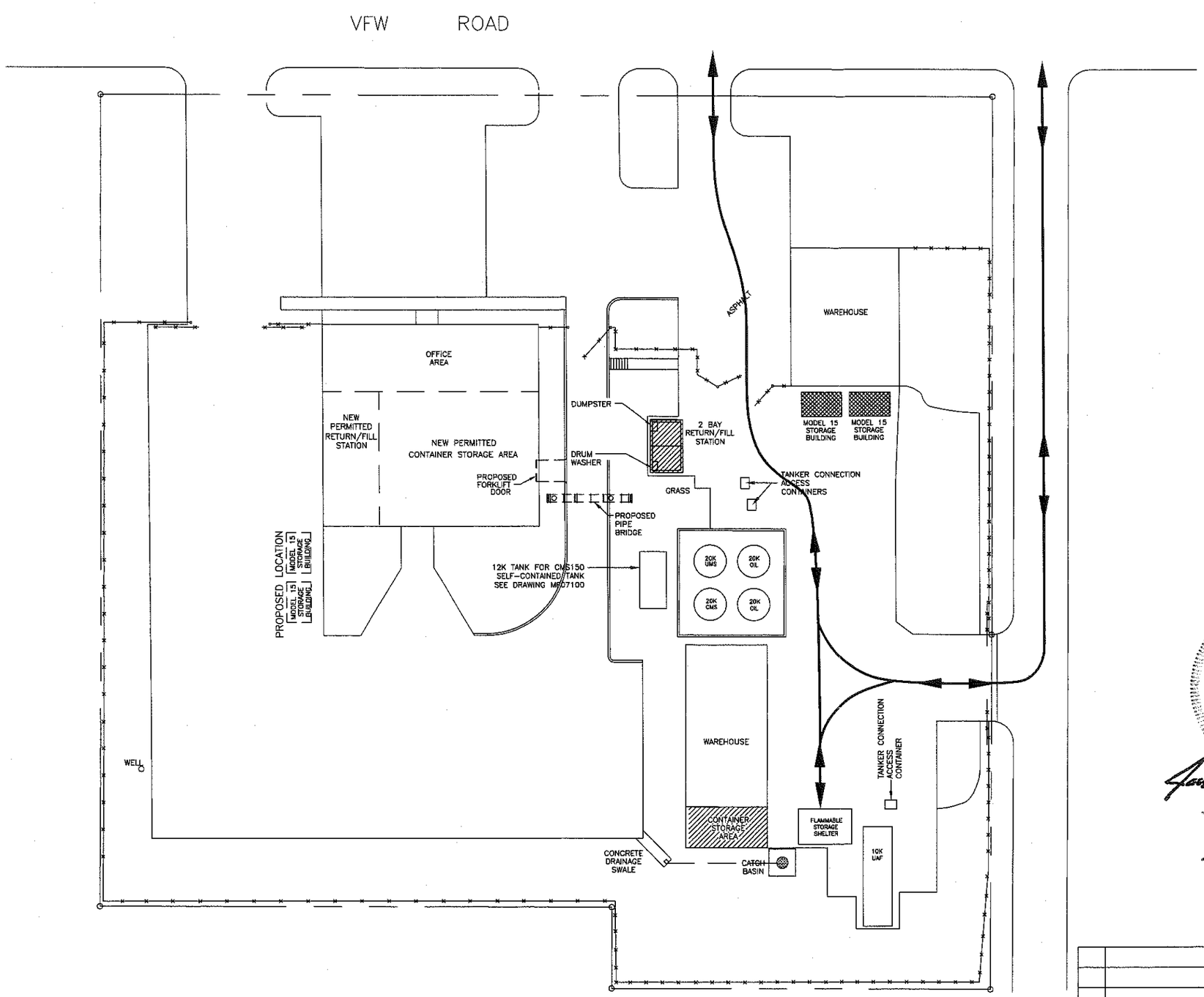

SITE PLAN

LEGEND:

TRAFFIC FLOW

UNIT TO BE CLOSED

UNIT TO BE MOVED

PROPOSED FUTURE EQUIPMENT LOCATION

A TriHydro Corporation representative conducted an on-site field inspection to verify, equipment, components, dimensions and existing conditions on April 10, 2003. Items inaccessible to visual observations were not field verified during this inspection. Revisions to these drawings (based on the inspection) were coordinated through the Safety-Kleen Engineering Department, as necessary.

TriHydro Corporation
Engineering and Environmental Consulting
920 Sheridan Street
Laramie, Wyoming 82070

GENERAL NOTES

PROPRIETARY STATEMENT

THIS DRAWING IS THE EXCLUSIVE PROPERTY OF SAFETY-KLEEN CORP. AND IS PROPRIETARY AND CONFIDENTIAL INFORMATION. THIS DRAWING AND THE INFORMATION CONTAINED THEREIN MUST NOT BE DUPLICATED, USED, DIVULGED, REPRODUCED, COPIED, DISCLOSED OR APPROPRIATED IN WHOLE OR IN PART FOR ANY PURPOSE OTHER THAN AS EXPRESSLY AUTHORIZED BY SAFETY-KLEEN CORP. THIS DRAWING MUST BE RETURNED PROMPTLY UPON REQUEST.

signature

4/28/03
date

QUESTEC CORPORATED
CONSULTING ENGINEERS
4812 Santana Circle · Columbia · MO 65203 · (314) 875-0280

Figure B-13

NO.	DESCRIPTION	BY	CHK	APPR	DATE

REVISIONS

TITLE
TRAFFIC PATTERN FOR FLAMMABLE STORAGE SHELTER

SAFETY-KLEEN CORP.
1000 N. RANDALL ROAD ELGIN, ILLINOIS 60123 PHONE 708-697-5460

SCALE	BY	CHKD	APPROVED	OPERATIONS	DATE
AS SHOWN	CWM	GPM			10-5-93

SERVICE CENTER LOCATION	SC-DWG. NO.-REV. NO.	SHEET NO.
PEKIN, IL.	513601-0012-0	

10-5-93 10:15 or 28-00 .DWG 93341.20

Figure B-14
Traffic Pattern for Container Warehouse

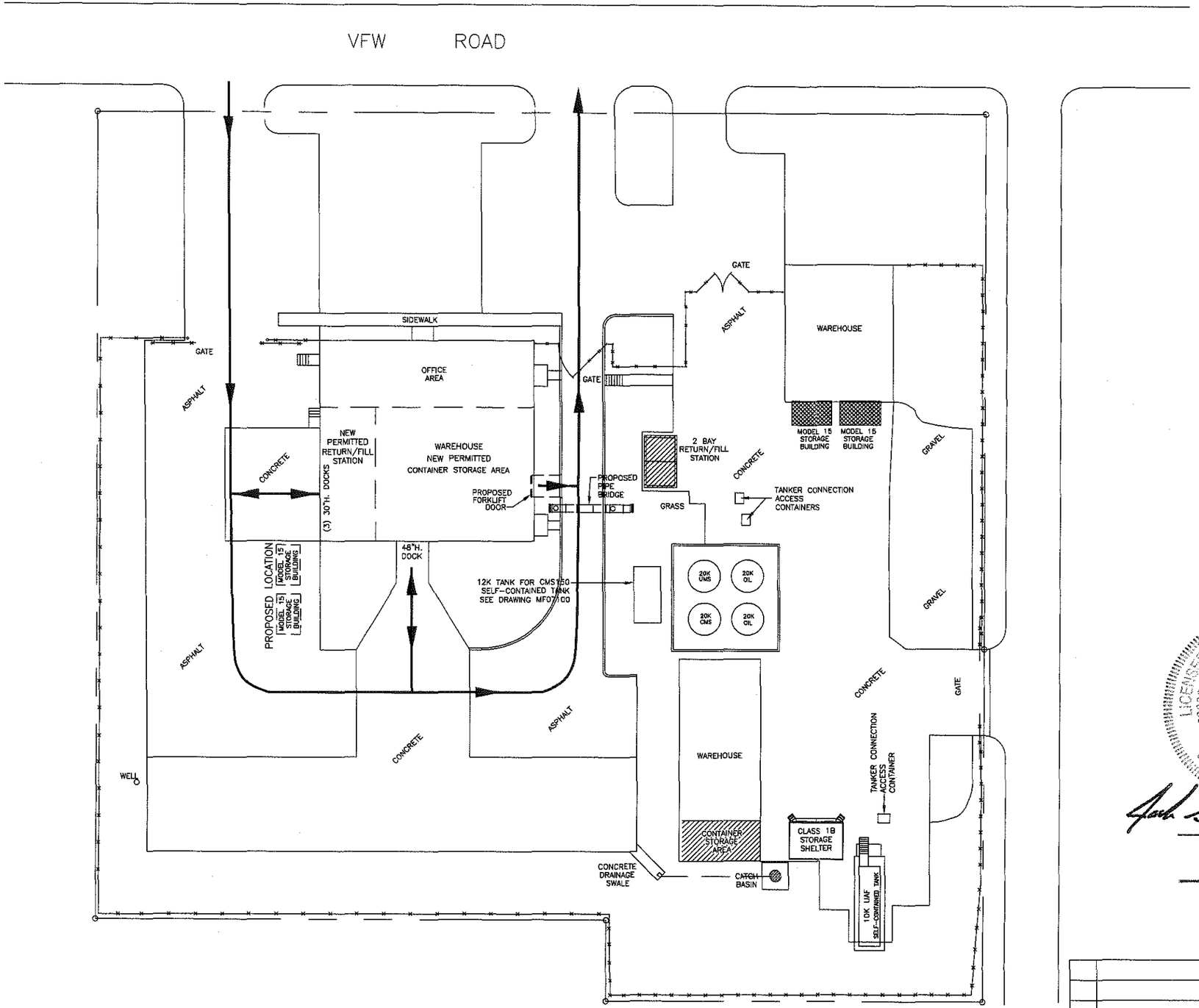

SITE PLAN

0 10 20 40 60

LEGEND:

TRAFFIC FLOW

UNIT TO BE CLOSED

UNIT TO BE MOVED

PROPOSED FUTURE EQUIPMENT LOCATION

A TriHydro Corporation representative conducted an on-site field inspection to verify, equipment, components, dimensions and existing conditions on April 10, 2003. Items inaccessible to visual observations were not field verified during this inspection. Revisions to these drawings (based on the inspection) were coordinated through the Safety-Kleen Engineering Department, as necessary.

TriHydro Corporation
Engineering and Environmental Consulting
920 Sheridan Street
Laramie, Wyoming 82070

LICENSED PROFESSIONAL ENGINEER
JACK G. BEDESSEM
062-046091
STATE OF ILLINOIS

signature

4/28/03
date

PROPRIETARY STATEMENT

THIS DRAWING IS THE EXCLUSIVE PROPERTY OF SAFETY-KLEEN CORP. AND IS PROPRIETARY AND CONFIDENTIAL INFORMATION. THIS DRAWING AND THE INFORMATION CONTAINED THEREIN MUST NOT BE DUPLICATED, USED, DIVULGED, REPRODUCED, COPIED, DISCLOSED OR APPROPRIATED IN WHOLE OR IN PART FOR ANY PURPOSE OTHER THAN AS EXPRESSLY AUTHORIZED BY SAFETY-KLEEN CORP. THIS DRAWING MUST BE RETURNED PROMPTLY UPON REQUEST.

Project Solutions Companies

FIGURE B-14

1390 Boone Industrial Drive • Suite 200 • Columbia • MO 65202
• Phone: (573) 443-7100 • Fax: (573) 443-7181 •

NO.	DESCRIPTION	BY	CHK	APPR	DATE
C	REVISED FOR PART B	JEK	KLS	KLS	021703
B	REVISE TRAFFIC PATTERN	JEK	KLS	KLS	021203
A	UPDATE SITE PER NEW OFFICE/WAREHOUSE	CWM	GPM		100593

REVISIONS

TITLE

TRAFFIC PATTERN FOR CONTAINER STORAGE AREA

SAFETY-KLEEN CORP.
1000 N. RANDALL ROAD ELGIN, ILLINOIS 60123 PHONE 708-697-8460

SCALE	BY	CHKD	APPROVED	OPERATIONS	DATE
1" = 20'-0"	R.D.	–	–	–	10/2/91

SERVICE CENTER LOCATION	SC-DWG. NO.-REV. NO.	SHEET NO.
PEKIN, IL.	513601-0006	C

10-5-93 10:1. J0068-01 .DWG 9341.20

Figure B-15
Topographic Details Within 1000 Feet

APPENDIX C
ANALYTICAL DATA

Exhibit C-1
Annual Waste Stream Re-characterization Analysis;
Parts Washer Solvent 105
Parts Washer Solvent 150
Aqueous Parts Washer Solution
Aqueous Brake Cleaner
Dry Cleaning Filter Powder
Paint Gun Cleaner
Immersion Cleaner
Parts Washer Sludge
Paint Wastes- Other
Dry Cleaner Bottoms
Parts Washer Tank Bottoms

WASTE STREAMS		WASTE CODE CHANGES - NATIONAL			
2002 SKDOT #	General Description	2002 Federal Waste Codes (From 2001 Data)	2003 Federal Waste Codes (From 2002 Data)	Waste Code Changes from 2002 to 2003	2003 NATIONAL SKDOT #
839	Aqueous Brake Cleaner	D039	D039	No Changes	839
11478 (L) 11479 (S) 14480 (LIQ AND SOLID MIX)	Branch Contaminated Debris	F001, F002, F003, F005, D001, D006, D007, D008, D011, D018, D022, D027, D028, D035, D039, D040	F001, F002, F003, F005, D001, D006, D007, D008, D011, D018, D022, D027, D028, D035, D036, D038 D039, D040	Add D036 & D038	15555 (SOLID AND LIQ MIX) 15556 (S) 15557(L)
950	Immersion Cleaner (IC 699)	D006, D008, D018, D027, D039, D040	D006, D008, D018, D027, D038, D039, D040	Add D038	456
704 801(RQ)	Parts Washer Solvent 105 Recycled	D001, D018, D039, D040	D001, D018, D039, D040	No Changes	704 801(RQ)
11657 (Bulk)	Parts Washer Solvents (Bulked) / Combination of 105 and 150 (Aqueous, where applicable)	D001, D018, D039, D040	D001, D018, D039, D040	No Changes	11657 (Bulk)
11656	Parts Washer Solvent Sludge/Dumpster Mud	D001, D039	D001, D039	No Changes	11656
11659	Parts Washer Solvent Tank Bottoms (bulk)**	D039	D039, D040	Add D040	15000
717	Parts Washer Solvent 150	D039	D039	No Changes	717
11658 12606(RQ)	Paint Gun Cleaner (SK)	F005, F003, D001, D018, D035, D039, D040	F005, F003, D001, D018, D035, D038, D039, D040	Add D038	12800 12801(RQ - high cap)
11653	Paint Waste Other ***	F005, F003, D001, D018, D035, D039, D040	F005, F003, D001, D018, D035, D036, D038, D039, D040	Add D036 & D038	12674 (ANY SIZE) 12675(30) 12676(55)
12627	Dry Cleaner (Perc) Bottoms	F002, D007,D039, D040	F002, D007,D039, D040	No Changes	12627
906	Dry Cleaner (Perc) Filter Powder	F002, D039	F002, D039	No Changes	906
569	Dry Cleaning Naphtha (Mineral Spirits)	D001, D039	D001, D039	No Changes	569

** Parts washer solvent tank bottoms are SK-generated wastes from the cleanout of solvent storage tanks. Safety-Kleen does not accept this waste stream from non-SK generators.

*** This DOT is acceptable to use for any size container of paint waste. For those states that require 30-gal paint waste to be listed separately, use SK DOT 12675; for states that require 55-gal paint waste to be listed separately, use SK DOT 12676.

Aqueous Brake Cleaner

				Sample Number	2014670	C2J300280001	C2J300280001X	2054681	2058150	2058153	2095616	C2J110184001
				Year	2000	2002	2002	2000	2000	2000	2001	2002
Analysis	Number of Samples	90 UCL for the 50th Percentile	Waste Code	Reg Limit	Albuquerque,NM	Albuquerque,NM	Albuquerque,NM	Avon,NY	Avon,NY	Avon,NY	Avon,NY	Avon,NY
BNA												
2,4,5-Trichlorophenol	68	ND	D041	400	<5.0	<5.0	<5.0	<5.0	<5.0	<0.50	<5.0	<5.0
2,4,6-Trichlorophenol	68	ND	D042	2	<2.0	<2.0	<2.0	<2.0	<2.0	<0.50	<2.0	<2.0
2,4-Dinitrotoluene	68	ND	D030	0.13	<0.13	<0.13	<0.13	<0.13	<0.13	<0.10	<0.13	<0.13
2-Methylphenol	68	ND	D023	200	<5.0	<5.0	<5.0	<5.0	<5.0	<50	<5.0	<5.0
3+4-Methylphenol	69	ND	D024/25	200	<5.0	<5.0	<5.0	<5.0	<5.0	<50	<5.0	<5.0
Hexachlorobenzene	68	ND	D032	0.13	<0.13	<0.13	<0.13	<0.13	<0.13	<0.10	<0.13	<0.13
Hexachlorobutadiene	68	ND	D033	0.5	<0.20	<0.20	<0.20	<0.20	<0.20	<0.50	<0.20	<0.20
Hexachloroethane	68	ND	D034	3	<0.50	<0.50	<0.50	<0.50	<0.50	<0.50	<0.50	<0.50
Nitrobenzene	68	ND	D036	2	<0.40	<0.40	<0.40	<0.40	<0.40	<0.50	<0.40	<0.40
Pentachlorophenol	68	ND	D037	100	<5.0	<5.0	<5.0	<5.0	<5.0	<0.50	<5.0	<5.0
Pyridine	68	ND	D038	5	<1.0	<1.0	<1.0	<1.0	<1.0	<0.54	<1.0	<1.0
METALS												
Arsenic	68	ND	D004	5	<5.00	<5.00	<5.00	<5.00	<5.00	<5.00	<5.00	<5.00
Barium	68	3.2	D005	100	2.33	0.926	12.7	1.79	<0.500	6.04	1.63	0.528
Cadmium	68	ND	D006	1	<0.500	<0.500	<0.500	<0.500	<0.500	<0.500	<0.500	<0.500
Chromium	68	ND	D007	5	<0.500	<0.500	<0.500	<0.500	<0.500	<0.500	<0.500	<0.500
Lead	68	ND	D008	5	<4.00	<4.00	<4.00	<4.00	<4.00	<4.00	<4.00	<4.00
Mercury	68	ND	D009	0.2	<0.10	<0.10	<0.10	<0.10	<0.10	<0.100	<0.10	<0.10
Selenium	68	ND	D010	1	<0.45	<0.45	<0.45	<0.45	<0.45	<0.45	<1.00	<0.45
Silver	68	ND	D011	5	<0.500	<0.500	<0.500	<0.500	<0.500	<0.500	<0.500	<0.500
Misc												
Flash Point	65	>200	D001	140	>200	>200	**69**	>200	>200	>200	>200	>200
pH	73	9.93	D002	2-12.5	10.6	10.12	8.6	9.2	8.32	11.3	9.42	9.93
VOA												
1,1-Dichloroethylene	68	ND	D029	0.7	<0.20	<0.20	<0.20	<0.20	<0.20	<2.0	<0.20	<2.0
1,2-Dichloroethane	68	ND	D028	0.5	<0.20	<0.20	<0.20	<0.20	<0.20	<2.0	<0.20	<2.0
1,4-Dichlorobenzene	68	ND	D027	7.5	<0.20	<0.20	<0.20	<0.20	<0.20	<2.0	<0.20	<2.0
Benzene	68	ND	D018	0.5	<0.20	<0.20	<0.20	<0.20	<0.20	<2.0	<0.20	<2.0
Carbon Tetrachloride	68	ND	D019	0.5	<0.20	<0.20	<0.20	<0.20	<0.20	<2.0	<0.20	<2.0
Chlorobenzene	68	ND	D021	100	<0.20	<0.20	<0.20	<0.20	<0.20	<2.0	<0.20	<2.0
Chloroform	68	ND	D022	6	<0.20	<0.20	<0.20	<0.20	<0.20	<2.0	<0.20	<2.0
Methyl Ethyl Ketone	68	ND	D035	200	<0.50	<0.50	<0.50	<0.50	<0.50	<5.0	<0.50	<5.0
Tetrachloroethylene	68	13.81	D039	0.7	<0.20	**1.43**	**1.776**	**2.743**	<0.20	**93.85**	**9.002**	**34.82**
Trichloroethylene	68	0.2	D040	0.5	<0.20	<0.20	<0.20	<0.20	<0.20	<2.0	<0.20	<2.0
Vinyl Chloride	68	ND	D043	0.2	<0.14	<0.14	<0.14	<0.14	<0.14	<1.4	<0.14	<1.4

Aqueous Brake Cleaner

				Sample Number	C2I25035200	C2J010167001	2027938	2094166	2094170	2094177	C2K200260001	2050730
				Year	2002	2002	2000	2001	2001	2001	2002	2000
Analysis	Number of Samples	90 UCL for the 50th Percentile	Waste Code	Reg Limit	Boise,ID	Clackamas,OR	Cohoes,NY	Cohoes,NY	Cohoes,NY	Cohoes,NY	Cohoes,NY	Columbus,GA
BNA												
2,4,5-Trichlorophenol	68	ND	D041	400	<5.0	<5.0	<5.0	<5.0	<5.0	<5.0	<5.0	<5.0
2,4,6-Trichlorophenol	68	ND	D042	2	<2.0	<2.0	<2.0	<2.0	<2.0	<2.0	<2.0	<2.0
2,4-Dinitrotoluene	68	ND	D030	0.13	<0.13	<0.13	<0.13	<0.13	<0.13	<0.13	<0.13	<0.13
2-Methylphenol	68	ND	D023	200	<5.0	<5.0	<5.0	<5.0	<5.0	<5.0	<5.0	<5.0
3+4-Methylphenol	69	ND	D024/25	200	<5.0	<5.0	<5.0	<5.0	<5.0	<5.0	<5.0	<5.0
Hexachlorobenzene	68	ND	D032	0.13	<0.13	<0.13	<0.13	<0.13	<0.13	<0.13	<0.13	<0.13
Hexachlorobutadiene	68	ND	D033	0.5	<0.20	<0.20	<0.20	<0.20	<0.20	<0.20	<0.20	<0.20
Hexachloroethane	68	ND	D034	3	<0.50	<0.50	<0.50	<0.50	<0.50	<0.50	<0.50	<0.50
Nitrobenzene	68	ND	D036	2	<0.40	<0.40	<0.40	<0.40	<0.40	<0.40	<0.40	<0.40
Pentachlorophenol	68	ND	D037	100	<5.0	<5.0	<5.0	<5.0	<5.0	<5.0	<5.0	<5.0
Pyridine	68	ND	D038	5	<1.0	<1.0	<1.0	<1.0	<1.0	<1.0	<1.0	<1.0
METALS												
Arsenic	68	ND	D004	5	<5.00	<5.00	<5.00	<5.00	<5.00	<5.00	<5.00	<5.00
Barium	68	3.2	D005	100	1.06	0.854	2.1	1.78	2.02	1.17	<0.500	5.54
Cadmium	68	ND	D006	1	<0.500	<0.500	<0.500	<0.500	<0.500	<0.500	<0.500	<0.500
Chromium	68	ND	D007	5	<0.500	<0.500	<0.500	<0.500	<0.500	<0.500	<0.500	<0.500
Lead	68	ND	D008	5	<4.00	<4.00	<4.00	<4.00	<4.00	<4.00	<4.00	<4.00
Mercury	68	ND	D009	0.2	<0.10	<0.10	<0.10	<0.10	<0.10	<0.10	<0.10	<0.10
Selenium	68	ND	D010	1	<0.45	<0.45	<0.45	<0.45	<0.45	<0.45	<0.45	<0.45
Silver	68	ND	D011	5	<0.500	<0.500	<0.500	<0.500	<0.500	<0.500	<0.500	<0.500
Misc												
Flash Point	65	>200	D001	140	>200	>200	>200	>200	>200	>200	>200	>200
pH	73	9.93	D002	2-12.5	10.25	9.86	7.42	9.66	9.47	7.9	11.03	11.81
VOA												
1,1-Dichloroethylene	68	ND	D029	0.7	<0.20	<0.20	<0.20	<2.0	<0.20	<0.20	<0.20	<2.0
1,2-Dichloroethane	68	ND	D028	0.5	<0.20	<0.20	<0.20	<2.0	<0.20	<0.20	<0.20	<2.0
1,4-Dichlorobenzene	68	ND	D027	7.5	<0.20	<0.20	<0.20	<2.0	<0.20	<0.20	<0.20	<2.0
Benzene	68	ND	D018	0.5	<0.20	<0.20	<0.20	<2.0	<0.20	<0.20	<0.20	<2.0
Carbon Tetrachloride	68	ND	D019	0.5	<0.20	<0.20	<0.20	<2.0	<0.20	<0.20	<0.20	<2.0
Chlorobenzene	68	ND	D021	100	<0.20	<0.20	<0.20	<2.0	<0.20	<0.20	<0.20	<2.0
Chloroform	68	ND	D022	6	<0.20	<0.20	<0.20	<2.0	<0.20	<0.20	<0.20	<2.0
Methyl Ethyl Ketone	68	ND	D035	200	<0.50	<0.50	<0.50	<5.0	<0.50	<0.50	<0.50	<5.0
Tetrachloroethylene	68	13.81	D039	0.7	0.618	**2.145**	0.686	**1615**	**2.104**	**2.889**	**25.76**	**131.2**
Trichloroethylene	68	0.2	D040	0.5	<0.20	<0.20	<0.20	**2.814**	**0.781**	0.2	<0.20	<2.0
Vinyl Chloride	68	ND	D043	0.2	<0.14	<0.14	<0.14	<1.4	<0.14	<0.14	<0.14	<1.4

Aqueous Brake Cleaner

				Sample Number	2090891	C2K080349001	2010698	2075111	2134788	2065470	2096469
				Year	2001	2002	2000	2001	2002	2000	2001
Analysis	Number of Samples	90 UCL for the 50th Percentile	Waste Code	Reg Limit	Columbus,GA	Columbus,GA	Denton,TX	Denton,TX	Denton,TX	Dodge City,KS	Dodge City,KS
BNA											
2,4,5-Trichlorophenol	68	ND	D041	400	<5.0	<5.0	<5.0	<5.0	<5.0	<5.0	<5.0
2,4,6-Trichlorophenol	68	ND	D042	2	<2.0	<2.0	<2.0	<2.0	<2.0	<2.0	<2.0
2,4-Dinitrotoluene	68	ND	D030	0.13	<0.13	<0.13	<0.13	<0.13	<0.13	<0.13	<0.13
2-Methylphenol	68	ND	D023	200	<5.0	<5.0	<5.0	<5.0	<5.0	<5.0	<5.0
3+4-Methylphenol	69	ND	D024/25	200	<5.0	<5.0	<5.0	<5.0	<5.0	<5.0	<5.0
Hexachlorobenzene	68	ND	D032	0.13	<0.13	<0.13	<0.13	<0.13	<0.13	<0.13	<0.13
Hexachlorobutadiene	68	ND	D033	0.5	<0.20	<0.20	<0.20	<0.20	<0.20	<0.20	<0.20
Hexachloroethane	68	ND	D034	3	<0.50	<0.50	<0.50	<0.50	<0.50	<0.50	<0.50
Nitrobenzene	68	ND	D036	2	<0.40	<0.40	<0.40	<0.40	<0.40	<0.40	<0.40
Pentachlorophenol	68	ND	D037	100	<5.0	<5.0	<5.0	<5.0	<5.0	<5.0	<5.0
Pyridine	68	ND	D038	5	<1.0	<1.0	<1.0	<1.0	<1.0	<1.0	<1.0
METALS											
Arsenic	68	ND	D004	5	<5.00	<5.00	<5.00	<5.00	<5.00	<5.00	<5.00
Barium	68	3.2	D005	100	1.17	1.19	4.36	1.17	2.91	2.90	1.57
Cadmium	68	ND	D006	1	<0.500	<0.500	<0.500	<0.500	<0.500	<0.500	<0.500
Chromium	68	ND	D007	5	<0.500	<0.500	<0.500	<0.500	<0.500	<0.500	<0.500
Lead	68	ND	D008	5	<4.00	<4.00	<4.00	<4.00	<4.00	<4.00	<4.00
Mercury	68	ND	D009	0.2	<0.10	<0.100	<0.10	<0.10	<0.10	<0.10	<0.10
Selenium	68	ND	D010	1	<0.45	<0.45	<0.45	<0.45	<0.45	<0.45	<0.45
Silver	68	ND	D011	5	<0.500	<0.500	<0.500	<0.500	<0.500	<0.500	<0.500
Misc											
Flash Point	65	>200	D001	140	>200	>200	**99**	**120**	>200	>200	>200
pH	73	9.93	D002	2-12.5	8.95	9.09	9.76	10.57	9.81	9.89	10.27
VOA											
1,1-Dichloroethylene	68	ND	D029	0.7	<0.20	<0.20	<2.0	<0.20	<0.20	<0.20	<2.0
1,2-Dichloroethane	68	ND	D028	0.5	<0.20	<0.20	<2.0	<0.20	<0.20	<0.20	<2.0
1,4-Dichlorobenzene	68	ND	D027	7.5	<0.20	<0.20	<2.0	<0.20	<0.20	<0.20	<2.0
Benzene	68	ND	D018	0.5	<0.20	<0.20	<2.0	<0.20	<0.20	<0.20	<2.0
Carbon Tetrachloride	68	ND	D019	0.5	<0.20	<0.20	<2.0	<0.20	<0.20	<0.20	<2.0
Chlorobenzene	68	ND	D021	100	<0.20	<0.20	<2.0	<0.20	<0.20	<0.20	<2.0
Chloroform	68	ND	D022	6	<0.20	<0.20	<2.0	<0.20	<0.20	<0.20	<2.0
Methyl Ethyl Ketone	68	ND	D035	200	<0.50	<0.50	<5.0	<0.50	<0.50	<0.50	<5.0
Tetrachloroethylene	68	13.81	D039	0.7	**2.043**	**2.369**	**236.1**	**12.61**	**22.21**	**25.14**	**17.09**
Trichloroethylene	68	0.2	D040	0.5	<0.20	<0.20	**2.691**	<0.20	0.255	<0.20	<2.0
Vinyl Chloride	68	ND	D043	0.2	<0.14	<0.14	<1.4	<0.14	<0.14	<0.14	<1.4

Aqueous Brake Cleaner

Analysis	Number of Samples	90 UCL for the 50th Percentile	Waste Code	Reg Limit	Dodge City,KS	Edwardsville,KS	Garden City,GA	Garden City,GA	Gering,NE	Gering,NE	Gering,NE
				Sample Number	C2H290219001	2016672	2025717	2139851	2011428	2075116	C2K150379001
				Year	2002	2000	2000	2002	2000	2001	2002
BNA											
2,4,5-Trichlorophenol	68	ND	D041	400	<5.0	<5.0	<5.0	<5.0	<5.0	<5.0	<5.0
2,4,6-Trichlorophenol	68	ND	D042	2	<2.0	<2.0	<2.0	<2.0	<2.0	<2.0	<2.0
2,4-Dinitrotoluene	68	ND	D030	0.13	<0.13	<0.13	<0.13	<0.13	<0.13	<0.13	<0.13
2-Methylphenol	68	ND	D023	200	<5.0	<5.0	<5.0	<5.0	<5.0	<5.0	<5.0
3+4-Methylphenol	69	ND	D024/25	200	<5.0	<5.0	<5.0	<5.0	<5.0	<5.0	<5.0
Hexachlorobenzene	68	ND	D032	0.13	<0.13	<0.13	<0.13	<0.13	<0.13	<0.13	<0.13
Hexachlorobutadiene	68	ND	D033	0.5	<0.20	<0.20	<0.20	<0.20	<0.20	<0.20	<0.20
Hexachloroethane	68	ND	D034	3	<0.50	<0.50	<0.50	<0.50	<0.50	<0.50	<0.50
Nitrobenzene	68	ND	D036	2	<0.40	<0.40	<0.40	<0.40	<0.40	<0.40	<0.40
Pentachlorophenol	68	ND	D037	100	<5.0	<5.0	<5.0	<5.0	<5.0	<5.0	<5.0
Pyridine	68	ND	D038	5	<1.0	<1.0	<1.0	<1.0	<1.0	<1.0	<1.0
METALS											
Arsenic	68	ND	D004	5	<5.00	<5.00	<5.00	<5.00	<5.00	<5.00	<5.00
Barium	68	3.2	D005	100	0.906	1.33	6.33	0.514	0.505	1.53	7.44
Cadmium	68	ND	D006	1	<0.500	<0.500	<0.500	<0.500	<0.500	<0.500	<0.500
Chromium	68	ND	D007	5	<0.500	<0.500	<0.500	<0.500	<0.500	<0.500	<0.500
Lead	68	ND	D008	5	<4.00	<4.00	<4.00	<4.00	<4.00	<4.00	<4.00
Mercury	68	ND	D009	0.2	<0.100	<0.10	<0.10	<0.10	<0.10	<0.10	<0.10
Selenium	68	ND	D010	1	<0.45	<0.45	<0.45	<0.45	<0.45	<0.45	<0.45
Silver	68	ND	D011	5	<0.500	<0.500	<0.500	<0.500	<0.500	<0.500	<0.500
Misc											
Flash Point	65	>200	D001	140	>200	>200	>200	>200	>200	>200	>200
pH	73	9.93	D002	2-12.5	9.38	10.86	9.28	9.60	9.51	10.10	9.53
VOA											
1,1-Dichloroethylene	68	ND	D029	0.7	<0.20	<0.20	<0.20	<0.20	<0.20	<2.0	<2.0
1,2-Dichloroethane	68	ND	D028	0.5	<0.20	<0.20	<0.20	<0.20	<0.20	<2.0	<2.0
1,4-Dichlorobenzene	68	ND	D027	7.5	<0.20	<0.20	<0.20	<0.20	<0.20	<2.0	<2.0
Benzene	68	ND	D018	0.5	<0.20	<0.20	<0.20	<0.20	<0.20	<2.0	<2.0
Carbon Tetrachloride	68	ND	D019	0.5	<0.20	<0.20	<0.20	<0.20	<0.20	<2.0	<2.0
Chlorobenzene	68	ND	D021	100	<0.20	<0.20	<0.20	<0.20	<0.20	<2.0	<2.0
Chloroform	68	ND	D022	6	<0.20	<0.20	<0.20	<0.20	<0.20	<2.0	<2.0
Methyl Ethyl Ketone	68	ND	D035	200	<0.50	<0.50	<0.50	<0.50	<0.50	<5.0	5.663
Tetrachloroethylene	68	13.81	D039	0.7	**3.243**	<0.20	<0.20	**3.097**	**2.165**	**112.5**	**60.07**
Trichloroethylene	68	0.2	D040	0.5	<0.20	<0.20	<0.20	<0.20	<0.20	<2.0	<2.0
Vinyl Chloride	68	ND	D043	0.2	<0.14	<0.14	<0.14	<0.14	<0.14	<1.4	<1.4

Aqueous Brake Cleaner

				Sample Number	2056821	2085848	2085853	2085878	C2J170104001	C2J170119001
				Year	2000	2001	2001	2001	2002	2002
Analysis	Number of Samples	90 UCL for the 50th Percentile	Waste Code	Reg Limit	Lackawanna,NY	Lackawanna,NY	Lackawanna,NY	Lackawanna,NY	Lackawanna,NY	Lackawanna,NY
BNA										
2,4,5-Trichlorophenol	68	ND	D041	400	<5.0	<5.0	<5.0	<5.0	<50	<5.0
2,4,6-Trichlorophenol	68	ND	D042	2	<2.0	<2.0	<2.0	<2.0	<20	<2.0
2,4-Dinitrotoluene	68	ND	D030	0.13	<0.13	<0.13	<0.13	<0.13	<1.3	<0.13
2-Methylphenol	68	ND	D023	200	<5.0	<5.0	<5.0	<5.0	<50	<5.0
3+4-Methylphenol	69	ND	D024/25	200	<5.0	<5.0	<5.0	<5.0	<50	<5.0
Hexachlorobenzene	68	ND	D032	0.13	<0.13	<0.13	<0.13	<0.13	<1.3	<0.13
Hexachlorobutadiene	68	ND	D033	0.5	<0.20	<0.20	<0.20	<0.20	<2.0	<0.20
Hexachloroethane	68	ND	D034	3	<0.50	<0.50	<0.50	<0.50	<5.0	<0.50
Nitrobenzene	68	ND	D036	2	<0.40	<0.40	<0.40	<0.40	<4.0	<0.40
Pentachlorophenol	68	ND	D037	100	<5.0	<5.0	<5.0	<5.0	<50	<5.0
Pyridine	68	ND	D038	5	<1.0	<1.0	<1.0	<1.0	<10.0	<1.0
METALS										
Arsenic	68	ND	D004	5	<5.00	<5.00	<5.00	<5.00	<5.00	<5.00
Barium	68	3.2	D005	100	1.49	4.33	10.4	<0.500	<0.500	1.03
Cadmium	68	ND	D006	1	<0.500	<0.500	<0.500	<0.500	<0.500	<0.500
Chromium	68	ND	D007	5	<0.500	<0.500	<0.500	<0.500	<0.500	<0.500
Lead	68	ND	D008	5	<4.00	<4.00	<4.00	<4.00	<4.00	<4.00
Mercury	68	ND	D009	0.2	<0.10	<0.10	<0.10	<0.10	<0.10	<0.10
Selenium	68	ND	D010	1	<0.45	<0.45	<0.45	<0.45	<0.45	<0.45
Silver	68	ND	D011	5	<0.500	<0.500	<0.500	<0.500	<0.500	<0.500
Misc										
Flash Point	65	>200	D001	140	>200	>200	>200	146	>200	>200
pH	73	9.93	D002	2-12.5	9.59	10.94	9.72	10.70	8.10	9.85
VOA										
1,1-Dichloroethylene	68	ND	D029	0.7	<2.0	<0.20	<0.20	<0.20	<2.0	<0.20
1,2-Dichloroethane	68	ND	D028	0.5	<2.0	<0.20	<0.20	<0.20	<2.0	<0.20
1,4-Dichlorobenzene	68	ND	D027	7.5	<2.0	<0.20	<0.20	<0.20	<2.0	<0.20
Benzene	68	ND	D018	0.5	<2.0	<0.20	<0.20	<0.20	<2.0	<0.20
Carbon Tetrachloride	68	ND	D019	0.5	<2.0	<0.20	<0.20	<0.20	<2.0	<0.20
Chlorobenzene	68	ND	D021	100	<2.0	<0.20	<0.20	<0.20	<2.0	<0.20
Chloroform	68	ND	D022	6	<2.0	<0.20	<0.20	<0.20	<2.0	<0.20
Methyl Ethyl Ketone	68	ND	D035	200	<5.0	0.603	<0.50	0.996	<5.0	<0.50
Tetrachloroethylene	68	13.81	D039	0.7	**821.7**	**13.81**	**5.216**	**12.28**	**83.24**	**14.8**
Trichloroethylene	68	0.2	D040	0.5	<2.0	<0.20	<0.20	**0.719**	<2.0	<0.20
Vinyl Chloride	68	ND	D043	0.2	<1.4	<0.14	<0.14	<0.14	<1.4	<0.14

Aqueous Brake Cleaner

				Sample Number	C2J170124001	2054241	2094862	2141698	C2J170217001	2055667	2055668
				Year	2002	2000	2001	2002	2002	2000	2000
Analysis	Number of Samples	90 UCL for the 50th Percentile	Waste Code	Reg Limit	Lackawanna,NY	Morrow,GA	Morrow,GA	Morrow,GA	Nepean,ON	No_ Amityville,NY	No_ Amityville,NY
BNA											
2,4,5-Trichlorophenol	68	ND	D041	400	<5.0	<5.0	<5.0	<5.0	<5.0	<5.0	<5.0
2,4,6-Trichlorophenol	68	ND	D042	2	<2.0	<2.0	<2.0	<2.0	<2.0	<2.0	<2.0
2,4-Dinitrotoluene	68	ND	D030	0.13	<0.13	<0.13	<0.13	<0.13	<0.13	<0.13	<0.13
2-Methylphenol	68	ND	D023	200	<5.0	<5.0	<5.0	<5.0	<5.0	<5.0	<5.0
3+4-Methylphenol	69	ND	D024/25	200	<5.0	<5.0	<5.0	<5.0	<5.0	<5.0	<5.0
Hexachlorobenzene	68	ND	D032	0.13	<0.13	<0.13	<0.13	<0.13	<0.13	<0.13	<0.13
Hexachlorobutadiene	68	ND	D033	0.5	<0.20	<0.20	<0.20	<0.20	<0.20	<0.20	<0.20
Hexachloroethane	68	ND	D034	3	<0.50	<0.50	<0.50	<0.50	<0.50	<0.50	<0.50
Nitrobenzene	68	ND	D036	2	<0.40	<0.40	<0.40	<0.40	<0.40	<0.40	<0.40
Pentachlorophenol	68	ND	D037	100	<5.0	<5.0	<5.0	<5.0	<5.0	<5.0	<5.0
Pyridine	68	ND	D038	5	<1.0	<1.0	<1.0	<1.0	<1.0	<1.0	<1.0
METALS											
Arsenic	68	ND	D004	5	<5.00	<5.00	<5.00	<5.00	<5.00	<5.00	<5.00
Barium	68	3.2	D005	100	1.50	1.47	1.49	0.763	4.90	<0.500	0.964
Cadmium	68	ND	D006	1	<0.500	<0.500	<0.500	<0.500	<0.500	<0.500	<0.500
Chromium	68	ND	D007	5	<0.500	<0.500	<0.500	<0.500	<0.500	<0.500	<0.500
Lead	68	ND	D008	5	<4.00	<4.00	<4.00	<4.00	<4.00	<4.00	<4.00
Mercury	68	ND	D009	0.2	<0.10	<0.10	<0.10	<0.100	<0.100	<0.10	<0.10
Selenium	68	ND	D010	1	<0.008	<0.45	<0.45	<0.45	<0.45	<0.45	<0.45
Silver	68	ND	D011	5	<0.500	<0.500	<0.500	<0.500	<0.500	<0.500	<0.500
Misc											
Flash Point	65	>200	D001	140	>200	>200	>200	>200	>200	>200	>200
pH	73	9.93	D002	2-12.5	9.60	9.68	9.72	8.28	9.18	10.71	7.94
VOA											
1,1-Dichloroethylene	68	ND	D029	0.7	<2.0	<2.0	<2.0	<0.20	<0.20	<0.20	<0.20
1,2-Dichloroethane	68	ND	D028	0.5	<2.0	<2.0	<2.0	<0.20	<0.20	<0.20	<0.20
1,4-Dichlorobenzene	68	ND	D027	7.5	<2.0	<2.0	<2.0	<0.20	<0.20	<0.20	<0.20
Benzene	68	ND	D018	0.5	<2.0	<2.0	<2.0	<0.20	<0.20	<0.20	<0.20
Carbon Tetrachloride	68	ND	D019	0.5	<2.0	<2.0	<2.0	<0.20	<0.20	<0.20	<0.20
Chlorobenzene	68	ND	D021	100	<2.0	<2.0	<2.0	<0.20	<0.20	<0.20	<0.20
Chloroform	68	ND	D022	6	<2.0	<2.0	<2.0	<0.20	<0.20	<0.20	<0.20
Methyl Ethyl Ketone	68	ND	D035	200	<5.0	<5.0	<5.0	<0.50	<0.50	<0.50	<0.50
Tetrachloroethylene	68	13.81	D039	0.7	**91.07**	**173**	**207.4**	<0.20	0.427	<0.20	**10.25**
Trichloroethylene	68	0.2	D040	0.5	<2.0	<2.0	<2.0	<0.20	<0.20	<0.20	<0.20
Vinyl Chloride	68	ND	D043	0.2	<1.4	<1.4	<1.4	<0.14	<0.14	<0.14	<0.14

Aqueous Brake Cleaner

				Sample Number	2055669	2084413	2084414	2084705	2143980
				Year	2000	2001	2001	2001	2002
Analysis	Number of Samples	90 UCL for the 50th Percentile	Waste Code	Reg Limit	No_ Amityville,NY	No_ Amityville,NY	No_ Amityville,NY	No_ Amityville,NY	No_ Amityville,NY
BNA									
2,4,5-Trichlorophenol	68	ND	D041	400	<5.0	<5.0	<5.0	<5.0	<0.75
2,4,6-Trichlorophenol	68	ND	D042	2	<2.0	<2.0	<2.0	<2.0	<0.75
2,4-Dinitrotoluene	68	ND	D030	0.13	<0.13	<0.13	<0.13	<0.13	<0.10
2-Methylphenol	68	ND	D023	200	<5.0	<5.0	<5.0	<5.0	<50
3+4-Methylphenol	69	ND	D024/25	200	<5.0	<5.0	<5.0	<5.0	<50
Hexachlorobenzene	68	ND	D032	0.13	<0.13	<0.13	<0.13	<0.13	<0.10
Hexachlorobutadiene	68	ND	D033	0.5	<0.20	<0.20	<0.20	<0.20	<0.25
Hexachloroethane	68	ND	D034	3	<0.50	<0.50	<0.50	<0.50	<0.50
Nitrobenzene	68	ND	D036	2	<0.40	<0.40	<0.40	<0.40	<0.50
Pentachlorophenol	68	ND	D037	100	<5.0	<5.0	<5.0	<5.0	<1.3
Pyridine	68	ND	D038	5	<1.0	<1.0	<1.0	<1.0	<1.3
METALS									
Arsenic	68	ND	D004	5	<5.00	<5.00	<5.00	<5.00	<0.500
Barium	68	3.2	D005	100	5.76	<5.00	7.92	8.83	20.2
Cadmium	68	ND	D006	1	<0.500	<0.500	<0.500	<0.500	<0.050
Chromium	68	ND	D007	5	<0.500	<0.500	<0.500	<0.500	<0.050
Lead	68	ND	D008	5	<4.00	<4.00	<4.00	<4.00	<0.400
Mercury	68	ND	D009	0.2	<0.10	<0.0008	<0.040	<0.10	<0.0008
Selenium	68	ND	D010	1	<0.45	<0.45	<0.45	<0.45	<0.750
Silver	68	ND	D011	5	<0.500	<0.500	<0.500	<0.500	<0.050
Misc									
Flash Point	65	>200	D001	140	>200	>200		>200	**132**
pH	73	9.93	D002	2-12.5	10.56	11.03	9.72	9.87	9.58
VOA									
1,1-Dichloroethylene	68	ND	D029	0.7	<0.20	<0.20	<0.20	<0.20	<1.0
1,2-Dichloroethane	68	ND	D028	0.5	<0.20	<0.20	<0.20	<0.20	<1.0
1,4-Dichlorobenzene	68	ND	D027	7.5	<0.20	<0.20	<0.20	<0.20	<1.0
Benzene	68	ND	D018	0.5	<0.20	<0.20	<0.20	<0.20	<1.0
Carbon Tetrachloride	68	ND	D019	0.5	<0.20	<0.20	<0.20	<0.20	<1.0
Chlorobenzene	68	ND	D021	100	<0.20	<0.20	<0.20	<0.20	<1.0
Chloroform	68	ND	D022	6	<0.20	<0.20	<0.20	<0.20	<1.0
Methyl Ethyl Ketone	68	ND	D035	200	<0.50	4.081	<1.0	<1.0	<2.5
Tetrachloroethylene	68	13.81	D039	0.7	**2.077**	**29.61**	0.448	0.403	**5.96**
Trichloroethylene	68	0.2	D040	0.5	<0.20	<0.20	<0.20	<0.20	<1.0
Vinyl Chloride	68	ND	D043	0.2	<0.14	<0.14	<0.14	<0.14	<1.0

Aqueous Brake Cleaner

				Sample Number	2143997	2144002	2097540	C2K080285001	2045070	2094376
				Year	2002	2002	2001	2002	2000	2001
Analysis	Number of Samples	90 UCL for the 50th Percentile	Waste Code	Reg Limit	No_ Amityville,NY	No_ Amityville,NY	Oklahoma City,OK	Oshawa,ON	St_ Charles,MO	St_ Charles,MO
BNA										
2,4,5-Trichlorophenol	68	ND	D041	400	<5.0	<5.0	<5.0	<<<<<<0.05	<<<<<<0.05	<<<<<<0.05
2,4,6-Trichlorophenol	68	ND	D042	2	<2.0	<2.0	<2.0	1.1	<<<<<<0.05	<<<<<<0.05
2,4-Dinitrotoluene	68	ND	D030	0.13	<0.13	<0.13	<0.13	<<<<<<0.05	<<<<<<0.05	<<<<<<0.05
2-Methylphenol	68	ND	D023	200	<5.0	<5.0	<5.0	0.093	0.094	0.064
3+4-Methylphenol	69	ND	D024/25	200	<5.0	<5.0	<5.0	0.42	0.16	0.14
Hexachlorobenzene	68	ND	D032	0.13	<0.13	<0.13	<0.13	<<<<<<0.05	<<<<<<0.05	<<<<<<0.05
Hexachlorobutadiene	68	ND	D033	0.5	<0.20	<0.20	<0.20	<<<<<<0.05	<<<<<<0.05	<<<<<<0.05
Hexachloroethane	68	ND	D034	3	<0.50	<0.50	<0.50	<<<<<<0.05	<<<<<<0.05	<<<<<<0.05
Nitrobenzene	68	ND	D036	2	<0.40	<0.40	<0.40	<<<<<<0.05	<<<<<<0.05	<<<<<<0.05
Pentachlorophenol	68	ND	D037	100	<5.0	<5.0	<5.0	<<<<<<3	<<<<<<3	<<<<<<3
Pyridine	68	ND	D038	5	<1.0	<1.0	<1.0	<<<<<<0.05	<<<<<<0.05	<<<<<<0.05
METALS										
Arsenic	68	ND	D004	5	<5.00	<5.00	<5.00	0.016	<<<<<<0.01	<<<<<<0.1
Barium	68	3.2	D005	100	6.04	<5.00	11.0	9.3	1.6	6.2
Cadmium	68	ND	D006	1	<0.500	<0.500	<0.500	0.017	0.019	<<<<<<0.05
Chromium	68	ND	D007	5	<0.500	<0.500	<0.500	0.24	0.012	0.077
Lead	68	ND	D008	5	<4.00	<4.00	<4.00	0.17	0.009	0.033
Mercury	68	ND	D009	0.2	<0.040	<0.040	<0.040	0.00063	<<<<<<0.002	<<<<<<0.002
Selenium	68	ND	D010	1	<0.45	<0.45	<0.45	0.013	<<<<<<0.005	<<<<<<0.05
Silver	68	ND	D011	5	<0.500	<0.500	<0.500	<<<<<<0.005	<<<<<<0.005	<<<<<<0.05
Misc										
Flash Point	65	>200	D001	140	>200	>200	>200			>201
pH	73	9.93	D002	2-12.5	9.93	9.88	9.91	9.7		7.9
VOA										
1,1-Dichloroethylene	68	ND	D029	0.7	<2.0	<2.0	<2.0	<<<<<<2.5	<<<<<<0.2	<<<<<<0.5
1,2-Dichloroethane	68	ND	D028	0.5	<2.0	<2.0	<2.0	<<<<<<2.5	<<<<<<0.2	<<<<<<0.5
1,4-Dichlorobenzene	68	ND	D027	7.5	<2.0	<2.0	<2.0	<<<<<<2.5	<<<<<<0.2	<<<<<<0.5
Benzene	68	ND	D018	0.5	<2.0	<2.0	**2.516**	<<<<<<2.5	<<<<<<0.2	<<<<<<0.5
Carbon Tetrachloride	68	ND	D019	0.5	<2.0	<2.0	<2.0	<<<<<<2.5	<<<<<<0.2	<<<<<<0.5
Chlorobenzene	68	ND	D021	100	<2.0	<2.0	<2.0	<<<<<<2.5	<<<<<<0.2	<<<<<<0.5
Chloroform	68	ND	D022	6	<2.0	<2.0	<2.0	<<<<<<2.5	<<<<<<0.2	<<<<<<0.5
Methyl Ethyl Ketone	68	ND	D035	200	<10.0	<10.0	<10.0	<<<<<<2.5	<<<<<<0.2	<<<<<<0.5
Tetrachloroethylene	68	13.81	D039	0.7	**438.3**	**552.3**	**367.9**	**90**	0.29	**8.5**
Trichloroethylene	68	0.2	D040	0.5	<2.0	<2.0	<2.0	<<<<<<2.5	<<<<<<0.2	<<<<<<0.5
Vinyl Chloride	68	ND	D043	0.2	<1.4	<1.4	<1.4	<<<<<<2.5	<<<<<<0.2	<<<<<<0.5

Aqueous Brake Cleaner

				Sample Number	2037498	2037514	2037516	2046052	2046053	2083412	2083694	2083703
				Year	2000	2000	2000	2000	2000	2001	2001	2001
Analysis	Number of Samples	90 UCL for the 50th Percentile	Waste Code	Reg Limit	Syracuse,NY	Syracuse,NY	Syracuse,NY	Syracuse,NY	Syracuse,NY	Syracuse,NY	Syracuse,NY	Syracuse,NY
BNA												
2,4,5-Trichlorophenol	68	ND	D041	400	<<<<<<0.05	<<<<<<0.05	<<<<<<0.05	<<<<<<0.05	<<<<<<0.05	<<<<<<0.05	<<<<<<0.05	<<<<<<0.05
2,4,6-Trichlorophenol	68	ND	D042	2	<<<<<<0.05	<<<<<<0.05	<<<<<<0.05	<<<<<<0.05	<<<<<<0.05	<<<<<<0.05	<<<<<<0.05	<<<<<<0.05
2,4-Dinitrotoluene	68	ND	D030	0.13	<<<<<<0.05	<<<<<<0.05	<<<<<<0.05	<<<<<<0.05	<<<<<<0.05	<<<<<<0.05	<<<<<<0.05	<<<<<<0.05
2-Methylphenol	68	ND	D023	200	<<<<<<0.05	<<<<<<0.05	0.051	<<<<<<0.05	<<<<<<0.05	<<<<<<0.05	0.23	<<<<<<0.05
3+4-Methylphenol	69	ND	D024/25	200	<<<<<<0.05	<<<<<<0.05	<<<<<<0.05	<<<<<<0.05	<<<<<<0.05	<<<<<<0.05	<<<<<<0.05	<<<<<<0.05
Hexachlorobenzene	68	ND	D032	0.13	<<<<<<0.05	<<<<<<0.05	<<<<<<0.05	<<<<<<0.05	<<<<<<0.05	<<<<<<0.05	<<<<<<0.05	<<<<<<0.05
Hexachlorobutadiene	68	ND	D033	0.5	<<<<<<0.05	<<<<<<0.05	<<<<<<0.05	<<<<<<0.05	<<<<<<0.05	<<<<<<0.05	<<<<<<0.05	<<<<<<0.05
Hexachloroethane	68	ND	D034	3	<<<<<<0.05	<<<<<<0.05	<<<<<<0.05	<<<<<<0.05	<<<<<<0.05	<<<<<<0.05	<<<<<<0.05	<<<<<<0.05
Nitrobenzene	68	ND	D036	2	<<<<<<0.05	<<<<<<0.05	<<<<<<0.05	<<<<<<0.05	<<<<<<0.05	<<<<<<0.05	<<<<<<0.05	<<<<<<0.05
Pentachlorophenol	68	ND	D037	100	<<<<<<3	<<<<<<3	<<<<<<3	<<<<<<3	<<<<<<3	<<<<<<3	<<<<<<3	<<<<<<3
Pyridine	68	ND	D038	5	<<<<<<0.05	<<<<<<0.05	<<<<<<0.05	<<<<<<0.05	<<<<<<0.05	<<<<<<0.05	<<<<<<0.05	<<<<<<0.05
METALS												
Arsenic	68	ND	D004	5	<<<<<<0.1	<<<<<<0.1	<<<<<<0.1	<<<<<<0.1	<<<<<<0.5	<<<<<<0.5	<<<<<<0.5	<<<<<<0.5
Barium	68	3.2	D005	100	3.2	9.4	20.4	21.8	<<<<<<10	15.5	29.1	32.5
Cadmium	68	ND	D006	1	<<<<<<0.05	0.066	0.14	0.083	<<<<<<0.25	0.28	0.47	0.36
Chromium	68	ND	D007	5	<<<<<<0.05	0.24	0.58	0.48	<<<<<<0.25	1	1.3	0.8
Lead	68	ND	D008	5	<<<<<<0.03	0.16	0.26	0.14	0.17	7	0.56	0.33
Mercury	68	ND	D009	0.2	<<<<<<0.002	<<<<<<0.002	<<<<<<0.002	<<<<<<0.002	<<<<<<0.002	<<<<<<0.002	<<<<<<0.002	<<<<<<0.002
Selenium	68	ND	D010	1	<<<<<<0.05	<<<<<<0.05	<<<<<<0.05	<<<<<<0.05	<<<<<<0.25	<<<<<<0.25	<<<<<<0.25	<<<<<<0.25
Silver	68	ND	D011	5	<<<<<<0.05	<<<<<<0.05	<<<<<<0.05	<<<<<<0.05	<<<<<<0.25	<<<<<<0.25	<<<<<<0.25	<<<<<<0.25
Misc												
Flash Point	65	>200	D001	140	148	151	158	151	159	148	151	149
pH	73	9.93	D002	2-12.5	10.2	10.7	10.7	10.6	10.8	10.7	9.9	10.6
VOA												
1,1-Dichloroethylene	68	ND	D029	0.7	<<<<<<0.2	<<<<<<2.5	<<<<<<2.5	<<<<<<1.2	<<<<<<0.2	<<<<<<0.2	<<<<<<200	<<<<<<0.2
1,2-Dichloroethane	68	ND	D028	0.5	<<<<<<0.2	<<<<<<2.5	<<<<<<2.5	<<<<<<1.2	<<<<<<0.2	<<<<<<0.2	<<<<<<200	<<<<<<0.2
1,4-Dichlorobenzene	68	ND	D027	7.5	<<<<<<0.2	<<<<<<2.5	<<<<<<2.5	<<<<<<1.2	<<<<<<0.2	<<<<<<0.2	<<<<<<200	<<<<<<0.2
Benzene	68	ND	D018	0.5	<<<<<<0.2	<<<<<<2.5	<<<<<<2.5	<<<<<<1.2	<<<<<<0.2	<<<<<<0.2	<<<<<<200	<<<<<<0.2
Carbon Tetrachloride	68	ND	D019	0.5	<<<<<<0.2	<<<<<<2.5	<<<<<<2.5	<<<<<<1.2	<<<<<<0.2	<<<<<<0.2	<<<<<<200	<<<<<<0.2
Chlorobenzene	68	ND	D021	100	<<<<<<0.2	<<<<<<2.5	<<<<<<2.5	<<<<<<1.2	<<<<<<0.2	<<<<<<0.2	<<<<<<200	<<<<<<0.2
Chloroform	68	ND	D022	6	<<<<<<0.2	<<<<<<2.5	<<<<<<2.5	<<<<<<1.2	<<<<<<0.2	<<<<<<0.2	<<<<<<200	<<<<<<0.2
Methyl Ethyl Ketone	68	ND	D035	200	<<<<<<0.2	<<<<<<2.5	<<<<<<2.5	<<<<<<1.2	<<<<<<0.2	<<<<<<0.2	**2600**	<<<<<<0.2
Tetrachloroethylene	68	13.81	D039	0.7	**5.9**	**52**	**48**	**24**	<<<<<<0.2	<<<<<<0.2	<<<<<<200	<<<<<<0.2
Trichloroethylene	68	0.2	D040	0.5	<<<<<<0.2	<<<<<<2.5	<<<<<<2.5	<<<<<<1.2	<<<<<<0.2	<<<<<<0.2	<<<<<<200	<<<<<<0.2
Vinyl Chloride	68	ND	D043	0.2	<<<<<<0.2	<<<<<<2.5	<<<<<<2.5	<<<<<<1.2	<<<<<<0.2	<<<<<<0.2	<<<<<<200	<<<<<<0.2

Aqueous Brake Cleaner

Analysis	Number of Samples	90 UCL for the 50th Percentile	Waste Code	Reg Limit	Sample Number C2J150260001	C2J150266001	C2J150272001	2138808	2091679	2018163	C2K150382001
				Year	2002	2002	2002	2002	2001	2000	2002
					Syracuse,NY	Syracuse,NY	Syracuse,NY	Tallahassee,FL	Tulsa,OK	Wichita,KS	Wichita,KS
BNA											
2,4,5-Trichlorophenol	68	ND	D041	400	<<<<<<0.05		<<<<<<0.05	<<<<<0.05	<<<0.05	<<<0.05	<<<0.05
2,4,6-Trichlorophenol	68	ND	D042	2	<<<<<<0.05		<<<<<<0.05	<<<<<0.05	<<<0.05	<<<0.05	<<<0.05
2,4-Dinitrotoluene	68	ND	D030	0.13	<<<<<<0.05		<<<<<<0.05	**0.67**	<<<0.05	<<<0.05	**2**
2-Methylphenol	68	ND	D023	200	<<<<<<0.05		<<<<<<0.05	<<<<<0.05	<<<0.05	<<<0.05	<<<0.05
3+4-Methylphenol	69	ND	D024/25	200	<<<<<<0.05		0.05	<<<<<0.05	<<<0.05	<<<0.05	0.17
Hexachlorobenzene	68	ND	D032	0.13	<<<<<<0.05		<<<<<<0.05	<<<<<0.05	<<<0.05	<<<0.05	<<<0.05
Hexachlorobutadiene	68	ND	D033	0.5	<<<<<<0.05		<<<<<<0.05	<<<<<0.05	<<<0.05	<<<0.05	<<<0.05
Hexachloroethane	68	ND	D034	3	<<<<<<0.05		<<<<<<0.05	<<<<<0.05	<<<0.05	<<<0.05	<<<0.05
Nitrobenzene	68	ND	D036	2	<<<<<<0.05		**2.6**	<<<<<0.05	<<<0.05	<<<0.05	<<<0.05
Pentachlorophenol	68	ND	D037	100	<<<<<<3		<<<<<<3	<<<<<3	<<<3	<<<3	<<<3
Pyridine	68	ND	D038	5	<<<<<<0.05		<<<<<<0.05	<<<<<0.05	<<<0.05	<<<0.05	<<<0.05
METALS											
Arsenic	68	ND	D004	5	<<<<<<0.5		<<<<<<0.5	<<<<<0.5	<<<0.5	<<<0.5	<<<0.5
Barium	68	3.2	D005	100	<<<<<<10		49.8	<<<<<10	31.1	<<<10	11.4
Cadmium	68	ND	D006	1	<<<<<<0.25		<<<<<<0.25	<<<<<0.25	<<<0.25	<<<0.25	<<<0.25
Chromium	68	ND	D007	5	<<<<<<0.25		1.6	<<<<<0.25	0.57	<<<0.25	<<<0.25
Lead	68	ND	D008	5	0.39		3.1	<<<<<0.15	0.2	<<<0.15	0.24
Mercury	68	ND	D009	0.2	0.0032		<<<<<<0.002	<<<<<0.002	<<<0.002	<<<0.002	<<<0.002
Selenium	68	ND	D010	1	<<<<<<0.25		<<<<<<0.25	<<<<<0.25	<<<0.25	<<<0.25	<<<0.25
Silver	68	ND	D011	5	1.3		<<<<<<0.25	<<<<<0.25	<<<0.25	<<<0.25	<<<0.25
Misc											
Flash Point	65	>200	D001	140		156	143	143	143	149	146
pH	73	9.93	D002	2-12.5	9.8		10.3	11	11	9.9	10.2
VOA											
1,1-Dichloroethylene	68	ND	D029	0.7	<<<<<<0.2		<<<<<<0.2	<<<<<2.5	<<<0.2	<<<0.2	<<<10
1,2-Dichloroethane	68	ND	D028	0.5	<<<<<<0.2		<<<<<<0.2	<<<<<2.5	<<<0.2	<<<0.2	<<<10
1,4-Dichlorobenzene	68	ND	D027	7.5	<<<<<<0.2		<<<<<<0.2	<<<<<2.5	<<<0.2	<<<0.2	<<<10
Benzene	68	ND	D018	0.5	<<<<<<0.2		<<<<<<0.2	<<<<<2.5	<<<0.2	<<<0.2	<<<10
Carbon Tetrachloride	68	ND	D019	0.5	<<<<<<0.2		<<<<<<0.2	<<<<<2.5	<<<0.2	<<<0.2	<<<10
Chlorobenzene	68	ND	D021	100	<<<<<<0.2		<<<<<<0.2	<<<<<2.5	<<<0.2	<<<0.2	<<<10
Chloroform	68	ND	D022	6	<<<<<<0.2		<<<<<<0.2	<<<<<2.5	<<<0.2	<<<0.2	<<<10
Methyl Ethyl Ketone	68	ND	D035	200	<<<<<<0.2		<<<<<<0.2	<<<<<2.5	<<<0.2	<<<0.2	<<<10
Tetrachloroethylene	68	13.81	D039	0.7	<<<<<<0.2		**0.78**	**40**	<<<0.2	**1.6**	**140**
Trichloroethylene	68	0.2	D040	0.5	<<<<<<0.2		<<<<<<0.2	<<<<<2.5	<<<0.2	<<<0.2	<<<10
Vinyl Chloride	68	ND	D043	0.2	<<<<<<0.2		<<<<<<0.2	<<<<<2.5	<<<0.2	<<<0.2	<<<10

Dry Cleaner Bottoms

				Sample Number	2011425	2013631	2013632	2015455	2015470	2015481	2016045	2017642
				Year	2000	2000	2000	2000	2000	2000	2000	2000
Analysis	**Number of Samples**	**90 UCL for the 50th Percentile**	**Waste Code**	**Reg Limit**	Gering,NE	Denton,TX	Denton,TX	Omaha,NE	Albuquerque,NM	Omaha,NE	Sioux Falls,SD	Grand Island,NE
BNA												
2,4,5-Trichlorophenol	106	ND	D041	400	<20.09	<0.040	<0.040	<2.5	<40.4	<200	<200	<200
2,4,6-Trichlorophenol	106	ND	D042	2	<20.09	<0.040	<0.040	<2.5	<40.4	<200	<200	<200
2,4-Dinitrotoluene	106	ND	D030	0.13	<11.418	<0.040	<0.040	<0.50	<8.08	<40	<40	<40
2-Methylphenol	106	ND	D023	200	<20.09	<0.040	<0.040	<2.5	<40.4	<200	<200	<200
3+4-Methylphenol	106	ND	D024/25	200	<20.09	<0.040	<0.040	<2.5	<40.4	<200	<200	<200
Hexachlorobenzene	106	ND	D032	0.13	<16.818	<0.040	<0.040	<0.50	<8.08	<40	<40	<40
Hexachlorobutadiene	106	ND	D033	0.5	<20.09	<0.040	<0.040	<2.5	<40.4	<200	<200	<200
Hexachloroethane	106	ND	D034	3	<20.09	<0.040	<0.040	<2.5	<40.4	<200	<200	<200
Nitrobenzene	106	ND	D036	2	<20.09	<0.040	<0.040	<2.5	<40.4	<200	<200	<200
Pentachlorophenol	106	ND	D037	100	<20.09	<0.20	<0.20	<2.5	<40.4	<200	<200	<200
Pyridine	106	ND	D038	5	<21.49	<0.040	<0.040	<2.5	<40.4	<200	<210	<210
METALS												
Arsenic	106	ND	D004	5	<0.95	<0.500	<0.500	<5.00	<5	<5.00	<5.00	<5.00
Barium	105	2.23	D005	100	0.64	0.200	0.137	<0.500	0.548	<0.500	1.14	1.10
Cadmium	106	ND	D006	1	0.116	<0.050	<0.050	<0.500	<0.5	<0.500	<0.500	<0.500
Chromium	106	8.7	D007	5	2.544	<0.050	<0.050	<0.500	2.209	<0.500	**18.0**	**14.0**
Lead	106	ND	D008	5	1.58	<0.400	<0.400	<4.00	4.339	<4.00	<4.00	4.28
Mercury	106	0.0339	D009	0.2	0.0339	<0.0008	<0.0008	<0.10	0.0557	**0.246**	**0.238**	0.125
Selenium	106	ND	D010	1	<0.72	<0.750	<0.750	<0.45	<0.008	<0.45	<0.008	<0.45
Silver	106	ND	D011	5	<0.095	<0.050	<0.050	<0.500	<0.5	<0.500	<0.500	<0.500
Misc												
Flash Point	103	>200	D001	140	>200	>200	>200	**135**	>200	>200	>200	>200
pH	109	6.2	D002	2-12.5	7.72	4.1	5.9	7.6	6.5	6.9	4.5	6.96
VOA												
1,1-Dichloroethylene	104	ND	D029	0.7	**2.2**	<2.0	<2.0	<2.0	<2.4	<40	<40	<40
1,2-Dichloroethane	104	ND	D028	0.5	<2	<2.0	<2.0	<2.0	<2	<20	<20	<20
1,4-Dichlorobenzene	103	ND	D027	7.5	2.43	<2.0	<2.0	<2.0	<2.6	<50	<50	<50
Benzene	104	ND	D018	0.5	<2	<2.0	<2.0	<2.0	<2	<20	<20	<20
Carbon Tetrachloride	104	ND	D019	0.5	<2	<2.0	<2.0	<2.0	<2	<20	<20	<20
Chlorobenzene	104	ND	D021	100	<2	<2.0	<2.0	<2.0	<2	<20	<20	<20
Chloroform	104	ND	D022	6	<2	<2.0	<2.0	<2.0	2.08	<20	<20	<20
Methyl Ethyl Ketone	104	3.4	D035	200	<5	<5.0	<5.0	<5.0	5.44	<50	**382**	124
Tetrachloroethylene	104	23500	D039	0.7	**1427.83**	**173.9**	**156.7**	**412.8**	**29182**	**137000**	**93100**	**89100**
Trichloroethylene	104	ND	D040	0.5	**8.06**	<2.0	<2.0	<2.0	**211.6**	**882**	**81.8**	**84**
Vinyl Chloride	104	ND	D043	0.2	<1.41	<1.4	<1.4	<1.4	<1.42	<15	<15	<15

Dry Cleaner Bottoms

				Sample Number	2018168	2018182	2021394	2025735	2039387	2042970	2045075
				Year	2000	2000	2000	2000	2000	2000	2000
Analysis	**Number of Samples**	**90 UCL for the 50th Percentile**	**Waste Code**	**Reg Limit**	Wichita,KS	Edwardsville,KS	Fargo,ND	Garden City,GA	Englewood,CO	Sioux Falls,SD	St_ Charles,MO
BNA											
2,4,5-Trichlorophenol	106	ND	D041	400	<200	<0.50	<200	<0.50	<0.50	<0.50	<0.50
2,4,6-Trichlorophenol	106	ND	D042	2	<200	<0.50	<200	<0.50	<0.50	<0.50	<0.50
2,4-Dinitrotoluene	106	ND	D030	0.13	<40	<0.10	<40	<0.10	<0.10	<0.10	<0.10
2-Methylphenol	106	ND	D023	200	<200	<0.50	<200	<50	<50	<50	<50
3+4-Methylphenol	106	ND	D024/25	200	<200	<0.50	<200	<50	<50	<50	<50
Hexachlorobenzene	106	ND	D032	0.13	<40	<0.10	<40	<0.10	<0.10	<0.10	<0.10
Hexachlorobutadiene	106	ND	D033	0.5	<200	<0.50	<200	<0.50	<0.50	<0.50	<0.50
Hexachloroethane	106	ND	D034	3	<200	<0.50	<200	<0.50	<0.50	<0.50	<0.50
Nitrobenzene	106	ND	D036	2	<200	<0.50	<200	<0.50	<0.50	<0.50	<0.50
Pentachlorophenol	106	ND	D037	100	<200	<0.50	<200	<0.50	<0.50	<0.50	<0.50
Pyridine	106	ND	D038	5	<200	<0.50	<210	<0.54	<0.54	<0.54	<0.54
METALS											
Arsenic	106	ND	D004	5	<5.00	<0.500	<5.00	<0.500	<0.500	<0.500	<0.500
Barium	105	2.23	D005	100	3.93	0.459	2.76	0.925	0.776	0.244	0.093
Cadmium	106	ND	D006	1	<0.500	<0.050	0.663	<0.050	<0.050	<0.050	<0.050
Chromium	106	8.7	D007	5	**14.2**	0.547	**33.8**	<0.050	0.065	0.706	0.327
Lead	106	ND	D008	5	**8.58**	<0.400	**8.65**	<0.400	<0.400	<0.400	<0.400
Mercury	106	0.0339	D009	0.2	<0.040	0.004	<0.040	<0.0008	0.0009	<0.0008	0.004
Selenium	106	ND	D010	1	<0.008	<0.750	<0.008	<0.750	<0.750	<0.750	<0.750
Silver	106	ND	D011	5	<0.500	<0.050	<0.500	<0.050	<0.050	<0.050	<0.050
Misc											
Flash Point	103	>200	D001	140	>200	>200	>200	>200	>200	>200	>200
pH	109	6.2	D002	2-12.5	6.34	6.62	6.27	6.8	5.44	6.85	6.82
VOA											
1,1-Dichloroethylene	104	ND	D029	0.7	<40	<2.0	<40	<2.0	<0.20	<0.20	<2.0
1,2-Dichloroethane	104	ND	D028	0.5	<20	<2.0	<20	<2.0	<0.20	<0.20	<2.0
1,4-Dichlorobenzene	103	ND	D027	7.5	<50	<2.0	<50	<2.0	<0.20	<0.20	<2.0
Benzene	104	ND	D018	0.5	<20	<2.0	<20	<2.0	<0.20	<0.20	<2.0
Carbon Tetrachloride	104	ND	D019	0.5	<20	<2.0	<20	<2.0	<0.20	<0.20	<2.0
Chlorobenzene	104	ND	D021	100	<20	<2.0	<20	<2.0	<0.20	<0.20	<2.0
Chloroform	104	ND	D022	6	<20	<2.0	<20	<2.0	<0.20	<0.20	<2.0
Methyl Ethyl Ketone	104	3.4	D035	200	<50	<5.0	<50	15.55	<0.50	<0.50	<5.0
Tetrachloroethylene	104	23500	D039	0.7	**94600**	**3203**	**72100**	**649**	**1521**	**183.8**	**393**
Trichloroethylene	104	ND	D040	0.5	**22.1**	<2.0	**34.3**	<2.0	<0.20	<0.20	<2.0
Vinyl Chloride	104	ND	D043	0.2	<15	<1.4	<15	<1.4	<0.14	<0.14	<1.4

Dry Cleaner Bottoms

				Sample Number	2050725	2051059	2054249	2056113	2058622	2060914	2066740	2066955
				Year	2000	2000	2000	2000	2000	2000	2000	2000
Analysis	Number of Samples	90 UCL for the 50th Percentile	Waste Code	Reg Limit	Columbus,GA	Pineville,LA	Morrow,GA	Albuquerque,NM	Norcross,GA	Medley,FL	El Monte,CA	Sacramento,CA
BNA												
2,4,5-Trichlorophenol	106	ND	D041	400	<0.50	<200	<200	<0.50	<200	<0.50	<200	<0.50
2,4,6-Trichlorophenol	106	ND	D042	2	<0.50	<200	<200	<0.50	<200	<0.50	<200	<0.50
2,4-Dinitrotoluene	106	ND	D030	0.13	<0.10	<40	<40	<0.10	<40	<0.10	<40	<0.10
2-Methylphenol	106	ND	D023	200	<50	<200	<200	<50	<200	<50	<200	<50
3+4-Methylphenol	106	ND	D024/25	200	<50	<200	<200	<50	<200	<50	<200	<50
Hexachlorobenzene	106	ND	D032	0.13	<0.10	<40	<40	<0.10	<40	<0.10	<40	<0.10
Hexachlorobutadiene	106	ND	D033	0.5	<0.50	<200	<200	<0.50	<200	<0.50	<200	<0.50
Hexachloroethane	106	ND	D034	3	<0.50	<200	<200	<0.50	<200	<0.50	<200	<0.50
Nitrobenzene	106	ND	D036	2	<0.50	<200	<200	<0.50	<200	<0.50	<200	<0.50
Pentachlorophenol	106	ND	D037	100	<0.50	<200	<200	<0.50	<200	<0.50	<200	<0.50
Pyridine	106	ND	D038	5	<0.54	<210	<210	<0.54	<210	<0.54	<210	<0.54
METALS												
Arsenic	106	ND	D004	5	<0.500	<5.00	<5.00	<0.500	<5.00	<5.00	<5.00	<0.500
Barium	105	2.23	D005	100	0.297	3.15	3.05	0.513	1.47	1.25	5.34	0.205
Cadmium	106	ND	D006	1	<0.050	<0.500	<0.500	<0.050	<0.500	<0.500	<0.500	<0.050
Chromium	106	8.7	D007	5	0.073	**8.44**	**14.1**	0.308	**17.2**	<0.500	**46.1**	0.137
Lead	106	ND	D008	5	<0.400	4.45	<4.00	<0.400	<4.00	<4.00	**8.82**	<0.400
Mercury	106	0.0339	D009	0.2	0.002	<0.10	<0.10	0.002	<0.10	<0.10	0.165	<0.0008
Selenium	106	ND	D010	1	<0.750	<0.45	<0.45	<0.750	<0.45	<0.45	<0.45	<0.750
Silver	106	ND	D011	5	<0.050	<0.500	<0.500	<0.050	<0.500	<0.500	0.885	<0.050
Misc												
Flash Point	103	>200	D001	140	>200	>200	>200	>200	>200	>200	>200	>200
pH	109	6.2	D002	2-12.5	7.54	5.69	5.95	6.91	5.37	5.07	4.57	5.83
VOA												
1,1-Dichloroethylene	104	ND	D029	0.7	<2.0	<4.0	<0.80	<0.20	<0.80	<0.20	<4.0	<2.0
1,2-Dichloroethane	104	ND	D028	0.5	<2.0	<2.0	<0.40	<0.20	<0.40	<0.20	<2.0	<2.0
1,4-Dichlorobenzene	103	ND	D027	7.5	<2.0	**8**	**10.1**	<0.20	**18.9**	<0.20	**15.6**	<2.0
Benzene	104	ND	D018	0.5	<2.0	<2.0	<0.40	<0.20	<0.40	<0.20	<2.0	<2.0
Carbon Tetrachloride	104	ND	D019	0.5	<2.0	<2.0	<0.40	<0.20	<0.40	<0.20	<2.0	<2.0
Chlorobenzene	104	ND	D021	100	<2.0	<2.0	<0.40	<0.20	<0.40	<0.20	18.5	<2.0
Chloroform	104	ND	D022	6	<2.0	<2.0	0.94	<0.20	0.81	<0.20	<2.0	<2.0
Methyl Ethyl Ketone	104	3.4	D035	200	<5.0	<5.0	<1.0	<0.50	<1.0	<0.50	<5.0	<5.0
Tetrachloroethylene	104	23500	D039	0.7	**113.9**	**60400**	**94700**	**100.8**	**14200**	**1348**	**102000**	**839.6**
Trichloroethylene	104	ND	D040	0.5	<2.0	**7.3**	**291**	<0.20	**2.4**	**22.02**	**50.2**	<2.0
Vinyl Chloride	104	ND	D043	0.2	<1.4	<1.5	<0.30	<0.14	<0.30	<0.14	<1.5	<1.4

Dry Cleaner Bottoms

Analysis	Number of Samples	90 UCL for the 50th Percentile	Waste Code	Reg Limit	Oakland,CA	Los Angeles,CA	Santa Anna,CA	Salida,CA	Fresno,CA	Highland,CA	Gering,NE	Omaha,NE	Fargo,ND
				Sample Number	2066957	2066965	2067064	2067120	2067244	2067351	2075117	2078445	2078800
				Year	2000	2000	2000	2000	2000	2000	2001	2001	2001
BNA													
2,4,5-Trichlorophenol	106	ND	D041	400	<0.50	<56.36	<200	<0.50	<0.50	<0.50	<200	<2.5	<0.50
2,4,6-Trichlorophenol	106	ND	D042	2	<0.50	<56.36	<200	<0.50	<0.50	<0.50	<200	<2.5	<0.50
2,4-Dinitrotoluene	106	ND	D030	0.13	<0.10	<11.272	<40	<0.10	<0.10	<0.10	<40	<0.50	<0.10
2-Methylphenol	106	ND	D023	200	<50	<92	<200	<50	<50	<50	<200	<250	<50
3+4-Methylphenol	106	ND	D024/25	200	<50	<92	<200	<50	<50	<50	<200	<250	<50
Hexachlorobenzene	106	ND	D032	0.13	<0.10	<11.272	<40	<0.10	<0.10	<0.10	<40	<0.50	<0.10
Hexachlorobutadiene	106	ND	D033	0.5	<0.50	<56.36	<200	<0.50	<0.50	<0.50	<200	<2.5	<0.50
Hexachloroethane	106	ND	D034	3	<0.50	<56.36	<200	<0.50	<0.50	<0.50	<200	<2.5	<0.50
Nitrobenzene	106	ND	D036	2	<0.50	<56.36	<200	<0.50	<0.50	<0.50	<200	<2.5	<0.50
Pentachlorophenol	106	ND	D037	100	<0.50	<56.36	<200	<0.50	<0.50	<0.50	<200	<2.5	<0.50
Pyridine	106	ND	D038	5	<0.54	<60.305	<210	<0.54	<0.54	<0.54	<210	<2.5	<0.54
METALS													
Arsenic	106	ND	D004	5	<0.500	<5.00	<5.00	<0.500	<0.500	<0.500	<5.00	<5.00	<0.500
Barium	105	2.23	D005	100	0.577	2.435	7	0.117	0.173	0.334	3.73	<0.500	0.625
Cadmium	106	ND	D006	1	0.201	0.549	<0.500	<0.050	<0.050	<0.050	**1.60**	<0.500	<0.050
Chromium	106	8.7	D007	5	0.050	**8.158**	**31.3**	0.448	0.147	0.281	**25.6**	**9.33**	0.109
Lead	106	ND	D008	5	<0.400	4.549	<4.00	<0.400	<0.400	<0.400	**98.9**	**86.3**	0.760
Mercury	106	0.0339	D009	0.2	<0.0008	<0.100	**0.374**	0.0063	0.0011	0.014	**0.23**	<0.10	<0.0008
Selenium	106	ND	D010	1	<0.750	<0.45	<0.45	<0.750	<0.750	<0.750	<0.45	<0.45	<0.750
Silver	106	ND	D011	5	0.052	0.637	0.576	<0.050	<0.050	<0.050	<0.500	<0.500	<0.050
Misc													
Flash Point	103	>200	D001	140	**128**	>200	>200	>200	>200	>200	>200	>200	>200
pH	109	6.2	D002	2-12.5	6.99	6.3	6.24	6.14	7.18	6.39	5.58	7.21	6.47
VOA													
1,1-Dichloroethylene	104	ND	D029	0.7	<0.20	<3.44		<0.20	<2.0	<0.20	<4.0	<2.0	<0.40
1,2-Dichloroethane	104	ND	D028	0.5	<0.20	<2.0		<0.20	<2.0	<0.20	<2.0	<2.0	<0.40
1,4-Dichlorobenzene	103	ND	D027	7.5	<0.20	**10.712**		<0.20	<2.0	<0.20	<5.0	<2.0	<0.40
Benzene	104	ND	D018	0.5	<0.20	<2.0		<0.20	<2.0	<0.20	<2.0	<2.0	<0.40
Carbon Tetrachloride	104	ND	D019	0.5	<0.20	<2.0		<0.20	<2.0	<0.20	<2.0	<2.0	<0.40
Chlorobenzene	104	ND	D021	100	<0.20	5.024		<0.20	<2.0	<0.20	<2.0	<2.0	<0.40
Chloroform	104	ND	D022	6	<0.20	<2.0		<0.20	<2.0	<0.20	**6.1**	<2.0	<0.40
Methyl Ethyl Ketone	104	3.4	D035	200	0.894	<5.0		<0.50	<5.0	<0.50	<5.0	<5.0	<1.0
Tetrachloroethylene	104	23500	D039	0.7	0.399	**71712**		**191**	**358.6**	**9908**	**28000**	**5780**	**59.46**
Trichloroethylene	104	ND	D040	0.5	<0.20	**57.08**		<0.20	<2.0	0.263	**639**	<2.0	<0.40
Vinyl Chloride	104	ND	D043	0.2	<0.14	<1.472		<0.14	<1.4	<0.14	<1.5	<1.4	<0.28

Dry Cleaner Bottoms

				Sample Number	2080693	2081028	2081029	2082217	2083129	2084682	2085443
				Year	2001	2001	2001	2001	2001	2001	2001
Analysis	Number of Samples	90 UCL for the 50th Percentile	Waste Code	Reg Limit	Sioux Falls,SD	Lackawanna,NY	Lackawanna,NY	Albuquerque,NM	Grand Island,NE	Garden City,GA	Clackamas,OR
BNA											
2,4,5-Trichlorophenol	106	ND	D041	400	<300	<0.040	<0.040	<0.50	<3.8	<300	<0.15
2,4,6-Trichlorophenol	106	ND	D042	2	<300	<0.040	<0.040	<0.50	<3.8	<300	<0.15
2,4-Dinitrotoluene	106	ND	D030	0.13	<40	<0.0080	<0.0080	<0.10	<0.50	<40	<0.020
2-Methylphenol	106	ND	D023	200	<400	<4.0	<4.0	<50	<5.0	<400	<10.0
3+4-Methylphenol	106	ND	D024/25	200	<500	<4.0	<4.0	<50	<6.3	<500	<10.0
Hexachlorobenzene	106	ND	D032	0.13	<40	<0.0080	<0.0080	<0.10	<0.50	<40	<0.020
Hexachlorobutadiene	106	ND	D033	0.5	<100	<0.040	<0.040	<0.50	<2.5	<200	<0.10
Hexachloroethane	106	ND	D034	3	<200	<0.040	<0.040	<0.50	<2.5	<200	<0.10
Nitrobenzene	106	ND	D036	2	<200	<0.040	<0.040	<0.50	<2.5	<200	<0.10
Pentachlorophenol	106	ND	D037	100	<520	<0.040	<0.040	<0.50	<6.5	<520	<0.26
Pyridine	106	ND	D038	5	<580	<0.043	<0.043	<0.54	<7.3	<580	<0.29
METALS											
Arsenic	106	ND	D004	5	<5.00	<0.500	<0.500	<0.500	<5.00	<5.00	<0.500
Barium	105	2.23	D005	100	0.703	0.179	0.299	0.283	9.50	3.40	0.728
Cadmium	106	ND	D006	1	<0.500	<0.050	<0.050	<0.050	<0.50	<0.500	<0.050
Chromium	106	8.7	D007	5	**14.2**	0.353	0.102	0.542	**21.4**	**17.2**	0.475
Lead	106	ND	D008	5	<4.00	0.890	<0.400	<0.400	**7.31**	<4.00	<0.400
Mercury	106	0.0339	D009	0.2	0.183	0.003	<0.0008	<0.0008	0.112	0.187	0.008
Selenium	106	ND	D010	1	<0.45	<0.750	<0.750	<0.750	<0.008	<0.45	<0.750
Silver	106	ND	D011	5	<0.500	<0.050	<0.050	<0.050	0.790	<0.500	<0.050
Misc											
Flash Point	103	>200	D001	140	>200	**102**	>200	>200	>200	**69**	>200
pH	109	6.2	D002	2-12.5	6.66	5.84	4.58	6.28	2.29	6.30	6.70
VOA											
1,1-Dichloroethylene	104	ND	D029	0.7	<2.0	<1.0	<1.0	<1.0		<40	<2.0
1,2-Dichloroethane	104	ND	D028	0.5	<1.0	<1.0	<1.0	<1.0		<20	<2.0
1,4-Dichlorobenzene	103	ND	D027	7.5	<2.5	<1.0	<1.0	<1.0		<50	<2.0
Benzene	104	ND	D018	0.5	**6.4**	<1.0	<1.0	<1.0		<20	<2.0
Carbon Tetrachloride	104	ND	D019	0.5	<1.0	<1.0	<1.0	<1.0		<20	<2.0
Chlorobenzene	104	ND	D021	100	<1.0	<1.0	<1.0	<1.0		<20	<2.0
Chloroform	104	ND	D022	6	<1.0	<1.0	<1.0	<1.0		<20	<2.0
Methyl Ethyl Ketone	104	3.4	D035	200	<2.5	<2.0	<4.0	<2.0		<50	<5.0
Tetrachloroethylene	104	23500	D039	0.7	**13800**	**324**	**346**	**61.3**		**99600**	**401.5**
Trichloroethylene	104	ND	D040	0.5	**318**	**1.99**	<1.0	<1.0		**72.7**	<2.0
Vinyl Chloride	104	ND	D043	0.2	<0.75	<1.0	<1.5	<1.0		<15	<1.4

Dry Cleaner Bottoms

				Sample Number	2087150	2088993	2089018	2089523	2089526	2089535	2089780	2090618
				Year	2001	2001	2001	2001	2001	2001	2001	2001
Analysis	**Number of Samples**	**90 UCL for the 50th Percentile**	**Waste Code**	**Reg Limit**	Fresno,CA	Highland,CA	Wichita,KS	Los Angeles,CA	Salida,CA	El Monte,CA	Columbus,GA	Santa Anna,CA
BNA												
2,4,5-Trichlorophenol	106	ND	D041	400	<300	<300	<300	<300	<300	<0.15	<300	<300
2,4,6-Trichlorophenol	106	ND	D042	2	<300	<300	<300	<300	<300	<0.15	<300	<300
2,4-Dinitrotoluene	106	ND	D030	0.13	<40	<40	<40	<40	<40	<0.020	<40	<40
2-Methylphenol	106	ND	D023	200	<400	<400	<400	<400	<400	<10.0	<400	<400
3+4-Methylphenol	106	ND	D024/25	200	<500	<500	<500	<500	<500	<10.0	<500	<500
Hexachlorobenzene	106	ND	D032	0.13	<40	<40	<40	<40	<40	<0.020	<40	<40
Hexachlorobutadiene	106	ND	D033	0.5	<200	<100	<200	<100	<100	<0.050	<100	<100
Hexachloroethane	106	ND	D034	3	<200	<200	<200	<200	<200	<0.10	<200	<200
Nitrobenzene	106	ND	D036	2	<200	<200	<200	<200	<200	<0.10	<200	<200
Pentachlorophenol	106	ND	D037	100	<520	<520	<520	<520	<520	<0.26	<520	<520
Pyridine	106	ND	D038	5	<580	<580	<580	<580	<580	<0.29	<580	<580
METALS												
Arsenic	106	ND	D004	5	<5.00	<5.00	<5.00	<5.00	<5.00	<0.500	<5.00	<5.00
Barium	105	2.23	D005	100	2.23	3.08	1.62	1.08	<0.500	0.668	0.785	3.69
Cadmium	106	ND	D006	1	<0.500	<0.500	<0.500	<0.500	<0.500	<0.050	<0.500	<0.500
Chromium	106	8.7	D007	5	**9.75**	**26.1**	**9.08**	**13.6**	<0.500	0.109	**11.3**	**25.7**
Lead	106	ND	D008	5	<4.00	<4.00	<4.00	<4.00	<4.00	<0.400	<4.00	<4.00
Mercury	106	0.0339	D009	0.2	0.199	<0.10	<0.10	0.114	0.172	<0.0008	0.145	0.146
Selenium	106	ND	D010	1	<0.45	0.870	0.470	<0.45	<0.45	<0.750	<0.45	<0.45
Silver	106	ND	D011	5	<0.500	0.739	<0.500	<0.500	<0.500	<0.050	<0.500	<0.500
Misc												
Flash Point	103	>200	D001	140	>200	>200	>200	>200	>200	>200	>200	>200
pH	109	6.2	D002	2-12.5	5.99	5.98	5.27	3.76	6.84	4.04	3.37	4.70
VOA												
1,1-Dichloroethylene	104	ND	D029	0.7	<2.0	<4.0	<4.0	**43.1**	<2.0	<2.0	<40	<40
1,2-Dichloroethane	104	ND	D028	0.5	<1.0	<2.0	<2.0	<20	<1.0	<2.0	<20	<20
1,4-Dichlorobenzene	103	ND	D027	7.5	**8.4**	<5.0	**7.7**	<50	4.6	<2.0	**123**	**173**
Benzene	104	ND	D018	0.5	<1.0	**4.4**	<2.0	**25.1**	<1.0	<2.0	<20	<20
Carbon Tetrachloride	104	ND	D019	0.5	<1.0	<2.0	<2.0	<20	**1.7**	<2.0	<20	<20
Chlorobenzene	104	ND	D021	100	18.2	<2.0	<2.0	**452**	<1.0	<2.0	<20	**174**
Chloroform	104	ND	D022	6	<1.0	<2.0	<2.0	<20	1	<2.0	<20	<20
Methyl Ethyl Ketone	104	3.4	D035	200	3.4	38.5	11.2	91	6.8	<5.0	96.2	62.2
Tetrachloroethylene	104	23500	D039	0.7	**119000**	**15600**	**32500**	**189000**	**23700**	**520.2**	**238000**	**278000**
Trichloroethylene	104	ND	D040	0.5	**381**	**9.8**	**7.9**	**4520**	**349**	<2.0	**547**	**1130**
Vinyl Chloride	104	ND	D043	0.2	<0.75	<1.5	<1.5	<15	<0.75	<1.4	<15	<15

Dry Cleaner Bottoms

				Sample Number	2091969	2092412	2094370	2094858	2095419	2096461	2096699	2097091
				Year	2001	2001	2001	2001	2001	2001	2001	2001
Analysis	Number of Samples	90 UCL for the 50th Percentile	Waste Code	Reg Limit	Sacramento,CA	Tulsa,OK	Pineville,LA	Morrow,GA	Englewood,CO	Dodge City,KS	Medley,FL	Oklahoma City,OK
BNA												
2,4,5-Trichlorophenol	106	ND	D041	400	<300	<300	<0.15	<300	<0.15	<0.15	<300	<300
2,4,6-Trichlorophenol	106	ND	D042	2	<300	<300	<0.15	<300	<0.15	<0.15	<300	<300
2,4-Dinitrotoluene	106	ND	D030	0.13	<40	<40	<0.020	<40	<0.020	<0.020	<40	<40
2-Methylphenol	106	ND	D023	200	<400	<400	<10.0	<400	<10.0	<10.0	<400	<400
3+4-Methylphenol	106	ND	D024/25	200	<500	<500	<10.0	<400	<10.0	<10.0	<400	<400
Hexachlorobenzene	106	ND	D032	0.13	<40	<40	<0.020	<40	<0.020	<0.020	<40	<40
Hexachlorobutadiene	106	ND	D033	0.5	<200	<100	<0.050	<200	<0.050	<0.050	<100	<200
Hexachloroethane	106	ND	D034	3	<200	<200	<0.10	<200	<0.10	<0.10	<200	<200
Nitrobenzene	106	ND	D036	2	<200	<200	<0.10	<200	<0.10	<0.10	<200	<200
Pentachlorophenol	106	ND	D037	100	<520	<520	<0.26	<520	<0.26	<0.26	<520	<520
Pyridine	106	ND	D038	5	<580	<580	<0.25	<500	<0.25	<0.25	<500	<500
METALS												
Arsenic	106	ND	D004	5	<5.00	<5.00	<0.500	<5.00	<0.500	<0.500	<5.00	<5.00
Barium	105	2.23	D005	100	2.15	2.43	0.159	1.96	0.210	0.677	0.873	5.07
Cadmium	106	ND	D006	1	<0.500	<0.500	0.085	<0.500	<0.050	<0.050	<0.500	<0.500
Chromium	106	8.7	D007	5	**17.0**	**12.1**	0.105	**19.0**	<0.050	**46.6**	**17.0**	**11.7**
Lead	106	ND	D008	5	<4.00	<4.00	<0.400	<4.00	<0.400	0.453	<4.00	4.55
Mercury	106	0.0339	D009	0.2	0.122	0.139	<0.0008	0.108	<0.0008	0.007	0.106	<0.10
Selenium	106	ND	D010	1	<0.45	<0.45	<0.750	<0.45	<0.750	<0.750	<0.45	<0.45
Silver	106	ND	D011	5	<0.500	<0.500	<0.050	<0.500	<0.050	<0.050	<0.500	<0.500
Misc												
Flash Point	103	>200	D001	140	>200	>200	>200	>200	>200	>200	>200	>200
pH	109	6.2	D002	2-12.5	5.75	6.30	7.36	6.22	3.82	5.28	6.59	5.72
VOA												
1,1-Dichloroethylene	104	ND	D029	0.7	<4.0	<1.6	<2.0	<4.0	<2.0	<2.0	<2.0	<4.0
1,2-Dichloroethane	104	ND	D028	0.5	<2.0	<0.80	<2.0	<2.0	<2.0	<2.0	<1.0	<2.0
1,4-Dichlorobenzene	103	ND	D027	7.5	<5.0	2.8	<2.0	**8.9**	<2.0	<2.0	**17.7**	<5.0
Benzene	104	ND	D018	0.5	<2.0	<0.80	<2.0	<2.0	<2.0	<2.0	<1.0	<2.0
Carbon Tetrachloride	104	ND	D019	0.5	<2.0	1	<2.0	<2.0	<2.0	<2.0	<1.0	<2.0
Chlorobenzene	104	ND	D021	100	2.6	<0.80	<2.0	<2.0	<2.0	<2.0	20.9	<2.0
Chloroform	104	ND	D022	6	<2.0	**85.1**	<2.0	<2.0	<2.0	<2.0	<1.0	<2.0
Methyl Ethyl Ketone	104	3.4	D035	200	17.2	6.2	<5.0	<5.0	<5.0	<5.0	41.4	<5.0
Tetrachloroethylene	104	23500	D039	0.7	**44000**	**23500**	**81.36**	**52100**	**75.95**	**996.5**	**26600**	**17400**
Trichloroethylene	104	ND	D040	0.5	**18**	**192**	<2.0	**42.8**	<2.0	<2.0	**94.5**	**4.5**
Vinyl Chloride	104	ND	D043	0.2	<1.5	<0.60	<1.4	<1.5	<1.4	<1.4	<0.75	<1.5

Dry Cleaner Bottoms

				Sample Number	2097327	2098942	2099681	2106935	2118893	2120224	2122011	2122338
				Year	2001	2001	2001	2001	2001	2001	2001	2001
Analysis	Number of Samples	90 UCL for the 50th Percentile	Waste Code	Reg Limit	Avon,NY	Greer,SC	Rohnert Park,CA	Oakland,CA	Rohnert Park,CA	Highland,CA	Santa Anna,CA	Fresno,CA
BNA												
2,4,5-Trichlorophenol	106	ND	D041	400	<0.15	<15.1425	<300	<0.15	<0.15	<0.15	<0.15	<0.15
2,4,6-Trichlorophenol	106	ND	D042	2	<0.15	<15.1425	<300	<0.15	<0.15	<0.15	<0.15	<0.15
2,4-Dinitrotoluene	106	ND	D030	0.13	<0.020	<2.019	<40	<0.020	<0.020	<0.020	<0.020	<0.020
2-Methylphenol	106	ND	D023	200	<10.0	<29.5	<400	<10.0	<10.0	<10.0	<10.0	<10.0
3+4-Methylphenol	106	ND	D024/25	200	<10.0	<29.5	<400	<10.0	<10.0	<10.0	<10.0	<10.0
Hexachlorobenzene	106	ND	D032	0.13	<0.020	<2.019	<40	<0.020	<0.020	<0.020	<0.020	<0.020
Hexachlorobutadiene	106	ND	D033	0.5	<0.050	<10.095	<200	<0.050	<0.10	<0.050	<0.10	<0.10
Hexachloroethane	106	ND	D034	3	<0.10	<10.095	<200	<0.10	<0.10	<0.10	<0.10	<0.10
Nitrobenzene	106	ND	D036	2	<0.10	<10.095	<200	<0.10	<0.10	<0.10	<0.10	<0.10
Pentachlorophenol	106	ND	D037	100	<0.26	<26.247	<520	<0.26	<0.26	<0.26	<0.26	<0.26
Pyridine	106	ND	D038	5	<0.25	<25.2375	<500	<0.25	<0.25	<0.25	<0.25	<0.25
METALS												
Arsenic	106	ND	D004	5	<0.500	<0.725	<5.00	<0.500	<0.500	<0.500	<0.500	<0.500
Barium	105	2.23	D005	100	0.145	0.618	3.63	0.184	0.052	0.100	0.413	0.199
Cadmium	106	ND	D006	1	<0.050	<0.0725	<0.500	<0.050	<0.050	<0.050	<0.050	<0.050
Chromium	106	8.7	D007	5	0.424	0.831	**11.2**	0.319	0.095	0.367	0.105	0.158
Lead	106	ND	D008	5	<0.400	1.187	**5.34**	<0.400	<0.400	<0.400	<0.400	<0.400
Mercury	106	0.0339	D009	0.2	<0.0008	<0.00576	0.105	<0.0008	<0.0008	0.004	0.001	0.003
Selenium	106	ND	D010	1	<0.750	<0.735	<0.45	<0.750	<0.750	<0.750	<0.750	<0.750
Silver	106	ND	D011	5	<0.050	<0.0725	<0.500	<0.050	<0.050	<0.050	<0.050	<0.050
Misc												
Flash Point	103	>200	D001	140	160	>200	>200	>200	>200	>200	157	137
pH	109	6.2	D002	2-12.5	6.81	5.70	6.59	7.11	5.73	9.63	6.55	6.65
VOA												
1,1-Dichloroethylene	104	ND	D029	0.7	<0.20	<1.952	<4.0	<0.20	<2.0	<0.20	<2.0	<2.0
1,2-Dichloroethane	104	ND	D028	0.5	<0.20	<1.936	<2.0	<0.20	<2.0	<0.20	<2.0	<2.0
1,4-Dichlorobenzene	103	ND	D027	7.5	<0.20	<1.96	<5.0	<0.20	<2.0	<0.20	<2.0	<2.0
Benzene	104	ND	D018	0.5	<0.20	<1.936	<2.0	<0.20	<2.0	<0.20	<2.0	<2.0
Carbon Tetrachloride	104	ND	D019	0.5	<0.20	<1.936	<2.0	<0.20	<2.0	<0.20	<2.0	<2.0
Chlorobenzene	104	ND	D021	100	<0.20	2.632	7.4	<0.20	<2.0	0.489	<2.0	<2.0
Chloroform	104	ND	D022	6	<0.20	<1.936	<2.0	<0.20	<2.0	<0.20	<2.0	<2.0
Methyl Ethyl Ketone	104	3.4	D035	200	<0.50	<4.84	7.4	<1.0	<10.0	<1.0	<10.0	<10.0
Tetrachloroethylene	104	23500	D039	0.7	<0.20	**37355.2**	**42000**	**909.4**	**137.1**	**3140**	**115.4**	**1230**
Trichloroethylene	104	ND	D040	0.5	<0.20	**3.164**	**107**	<0.20	**2.28**	<0.20	<2.0	<2.0
Vinyl Chloride	104	ND	D043	0.2	<0.14	<1.356	<1.5	<0.14	<1.4	<0.14	<1.4	<1.4

Dry Cleaner Bottoms

				Sample Number	2122887	2123633	2126770	2131638	2138070	2138281	2139779	2139799
				Year	2001	2001	2001	2002	2002	2002	2002	2002
Analysis	Number of Samples	90 UCL for the 50th Percentile	Waste Code	Reg Limit	El Monte,CA	Oakland,CA	Salida,CA	Los Angeles,CA	Medley,FL	Greer,SC	Garden City,GA	Los Angeles,CA
BNA												
2,4,5-Trichlorophenol	106	ND	D041	400	<0.75	<0.15	<0.75	<300	<300	<300	<0.15	<0.15
2,4,6-Trichlorophenol	106	ND	D042	2	<0.75	<0.15	<0.75	<300	<300	<300	<0.15	<0.15
2,4-Dinitrotoluene	106	ND	D030	0.13	<0.10	<0.020	<0.10	<40	<40	<40	<0.020	<0.020
2-Methylphenol	106	ND	D023	200	<50	<10.0	<50	<400	<400	<400	<10.0	<10.0
3+4-Methylphenol	106	ND	D024/25	200	<50	<10.0	<50	<400	<400	<400	<10.0	<10.0
Hexachlorobenzene	106	ND	D032	0.13	<0.10	<0.020	<0.10	<40	<40	<40	<0.020	<0.020
Hexachlorobutadiene	106	ND	D033	0.5	<0.50	<0.10	<0.25	<200	<100	<200	<0.050	<0.050
Hexachloroethane	106	ND	D034	3	<0.50	<0.10	<0.50	<200	<200	<200	<0.10	<0.10
Nitrobenzene	106	ND	D036	2	<0.50	<0.10	<0.50	<200	<200	<2000	<0.10	<0.10
Pentachlorophenol	106	ND	D037	100	<1.3	<0.26	<1.3	<520	<520	<520	<0.26	<0.26
Pyridine	106	ND	D038	5	<1.3	<0.25	<1.3	<500	<500	<500	<0.25	<0.25
METALS												
Arsenic	106	ND	D004	5	<0.500	<5.00	<5.00	<5.00	<5.00	<5.00	<0.500	<0.500
Barium	105	2.23	D005	100	2.43	1.13	<0.500	4.13	6.19	<5.00	<0.500	<0.500
Cadmium	106	ND	D006	1	<0.050	<0.500	<0.500	<0.500	<0.500	0.662	<0.050	<0.050
Chromium	106	8.7	D007	5	0.391	<0.500	<0.500	**9.50**	**16.5**	**22.3**	0.211	0.330
Lead	106	ND	D008	5	<0.400	<4.00	<4.00	<4.00	<4.00	4.50	<0.400	<0.400
Mercury	106	0.0339	D009	0.2	0.003	<0.10	<0.10	0.192	0.174	0.087	0.0009	0.003
Selenium	106	ND	D010	1	<0.750	<0.45	<0.45	<0.45	<0.45	<0.45	<0.750	<0.750
Silver	106	ND	D011	5	0.129	<0.500	<0.500	<0.500	<0.500	<0.500	<0.050	<0.050
Misc												
Flash Point	103	>200	D001	140	169	>200	>200	169	>200	>200	>200	>200
pH	109	6.2	D002	2-12.5	5.02	6.22	5.66	6.17	4.22	4.38	4.80	5.25
VOA												
1,1-Dichloroethylene	104	ND	D029	0.7	<2.0	<0.20	<0.20	7	<0.80	<8.0	<0.20	<0.20
1,2-Dichloroethane	104	ND	D028	0.5	<2.0	<0.20	<0.20	<0.40	<0.40	<4.0	<0.20	<0.20
1,4-Dichlorobenzene	103	ND	D027	7.5	<2.0	<0.20	<0.20	6.2	5.4	<10.0	<0.20	<0.20
Benzene	104	ND	D018	0.5	<2.0	<0.20	<0.20	<0.40	<0.40	<4.0	<0.20	<0.20
Carbon Tetrachloride	104	ND	D019	0.5	<2.0	<0.20	<0.20	<0.40	<0.40	<4.0	<0.20	<0.20
Chlorobenzene	104	ND	D021	100	<2.0	<0.20	<0.20	26.4	<0.40	<4.0	<0.20	<0.20
Chloroform	104	ND	D022	6	<2.0	<0.20	<0.20	<0.40	4.4	<4.0	<0.20	<0.20
Methyl Ethyl Ketone	104	3.4	D035	200	<10.0	<1.0	<1.0	<1.0	<1.0	<10.0	<1.0	<1.0
Tetrachloroethylene	104	23500	D039	0.7	**376.8**	**104.3**	**1860**	**23800**	**265000**	**67300**	**551.3**	**618.9**
Trichloroethylene	104	ND	D040	0.5	<2.0	<0.20	<0.20	**33.6**	**363**	**5.5**	<0.20	<0.20
Vinyl Chloride	104	ND	D043	0.2	<1.4	<0.14	<0.14	<0.30	<0.30	<3.0	<0.14	<0.14

Dry Cleaner Bottoms

				Sample Number	2139976	2140178	2140182	2140435	2140478	2141141	2141471	2141679	2142077
				Year	2002	2002	2002	2002	2002	2002	2002	2002	2002
Analysis	Number of Samples	90 UCL for the 50th Percentile	Waste Code	Reg Limit	Columbus,GA	Salida,CA	Salida,CA	Fresno,CA	El Monte,CA	Norcross,GA	Oakland,CA	Morrow,GA	Highland,CA
BNA													
2,4,5-Trichlorophenol	106	ND	D041	400	<300	<0.75	<0.75	<300	<0.75	<0.15	<0.75	<0.15	<300
2,4,6-Trichlorophenol	106	ND	D042	2	<300	<0.75	<0.75	<300	<0.75	<0.15	<0.75	<0.15	<300
2,4-Dinitrotoluene	106	ND	D030	0.13	<40	<0.10	<0.10	<40	<0.10	<0.020	<0.10	<0.020	<40
2-Methylphenol	106	ND	D023	200	<400	<50	<50	<400	<50	<10.0	<50	<10.0	<400
3+4-Methylphenol	106	ND	D024/25	200	<400	<50	<50	<400	<50	<10.0	<50	<10.0	<400
Hexachlorobenzene	106	ND	D032	0.13	<40	<0.10	<0.10	<40	<0.10	<0.020	<0.10	<0.020	<40
Hexachlorobutadiene	106	ND	D033	0.5	<100	<0.25	<0.25	<100	<0.25	<0.10	<0.25	<0.050	<200
Hexachloroethane	106	ND	D034	3	<200	<0.50	<0.50	<200	<0.50	<0.10	<0.50	<0.10	<200
Nitrobenzene	106	ND	D036	2	<200	<0.50	<0.50	<200	<0.50	<0.10	<0.50	<0.10	<200
Pentachlorophenol	106	ND	D037	100	<520	<1.3	<1.3	<520	<1.3	<0.26	<1.3	<0.26	<520
Pyridine	106	ND	D038	5	<500	<1.3	<1.3	<500	<1.3	<0.25	<1.3	<0.25	<500
METALS													
Arsenic	106	ND	D004	5	<5.00	<0.500	<0.500	<5.00	<5.00	<0.500	<0.500	<0.500	<5.00
Barium	105	2.23	D005	100	<5.00	<0.500	<0.500	<5.0	<5.00	<0.500	0.556	<0.500	<5.00
Cadmium	106	ND	D006	1	<0.500	<0.050	<0.050	<0.500	<0.500	<0.050	<0.050	<0.050	<0.500
Chromium	106	8.7	D007	5	**9.58**	<0.050	<0.050	**19.4**	<0.500	0.097	0.475	0.094	**13.0**
Lead	106	ND	D008	5	<4.00	<0.400	<0.400	**9.43**	<4.00	<0.400	<0.400	<0.400	<4.00
Mercury	106	0.0339	D009	0.2	0.148	0.003	0.001	<0.10	<0.10	<0.0008	0.004	<0.0008	**0.248**
Selenium	106	ND	D010	1	<0.45	<0.750	<0.750	<0.45	<0.45	<0.750	<0.750	<0.750	<0.45
Silver	106	ND	D011	5	<0.500	<0.050	<0.050	<0.500	<0.500	<0.050	<0.050	<0.050	<0.500
Misc													
Flash Point	103	>200	D001	140	>200	>200	>200	>200	>200	>200	>200	**102**	>200
pH	109	6.2	D002	2-12.5	3.98	5.59	5.93	6.03	6.84	6.69	5.00	3.16	4.58
VOA													
1,1-Dichloroethylene	104	ND	D029	0.7	<0.80	<2.0	<2.0	<4.0	<0.10	<0.20	<1.0	<0.20	**3.9**
1,2-Dichloroethane	104	ND	D028	0.5	<0.40	<2.0	<2.0	<2.0	<0.10	<0.20	<1.0	<0.20	<0.20
1,4-Dichlorobenzene	103	ND	D027	7.5	**16.2**	<2.0	<2.0	**7.8**	<0.10	<0.20	<1.0	<0.20	4.3
Benzene	104	ND	D018	0.5	<0.40	<2.0	<2.0	<2.0	<0.10	<0.20	<1.0	<0.20	<0.20
Carbon Tetrachloride	104	ND	D019	0.5	<0.40	<2.0	<2.0	<2.0	<0.20	<0.20	<1.0	<0.20	<0.20
Chlorobenzene	104	ND	D021	100	<0.40	<2.0	<2.0	32.2	<0.10	<0.20	<1.0	<0.20	**128**
Chloroform	104	ND	D022	6	<0.40	<2.0	<2.0	<2.0	<0.10	<0.20	<1.0	<0.20	0.35
Methyl Ethyl Ketone	104	3.4	D035	200	<1.0	<10.0	<10.0	<5.0	<0.10	<1.0	<2.5	<1.0	<0.50
Tetrachloroethylene	104	23500	D039	0.7	**21200**	**46.78**	**140.1**	**39200**	**141.2**	**74.76**	**625**	**93.29**	**15400**
Trichloroethylene	104	ND	D040	0.5	**37.7**	<2.0	<2.0	**25.8**	<0.10	<0.20	<1.0	<0.20	**3.2**
Vinyl Chloride	104	ND	D043	0.2	<0.30	<1.4	<1.4	<1.5	<0.10	<0.14	<1.0	<0.14	<0.15

Dry Cleaner Bottoms

				Sample Number	2142089	2142996	2145246	2145824	C2F210329002	C2F210329003	C2F210329003R2
				Year	2002	2002	2002	2002	2002	2002	2002
Analysis	Number of Samples	90 UCL for the 50th Percentile	Waste Code	Reg Limit	Macon,GA	Santa Anna,CA	Rohnert Park,CA	Englewood,CO	Pineville,LA	Pineville,LA	Pineville,LA
BNA											
2,4,5-Trichlorophenol	106	ND	D041	400	<0.15	<42.129	<0.75	<0.15		<<<<<<20	
2,4,6-Trichlorophenol	106	ND	D042	2	<0.15	<42.129	<0.75	<0.15		<<<<<<20	
2,4-Dinitrotoluene	106	ND	D030	0.13	<0.020	<5.6172	<0.10	<0.020		<<<<<<20	
2-Methylphenol	106	ND	D023	200	<10.0	<64.6	<50	<10.0		<<<<<<20	
3+4-Methylphenol	106	ND	D024/25	200	<10.0	<64.6	<50	<10.0		<<<<<<20	
Hexachlorobenzene	106	ND	D032	0.13	<0.020	<5.6172	<0.10	<0.020		<<<<<<20	
Hexachlorobutadiene	106	ND	D033	0.5	<0.050	<28.043	<0.50	<0.10		<<<<<<20	
Hexachloroethane	106	ND	D034	3	<0.10	<28.086	<0.50	<0.10		<<<<<<20	
Nitrobenzene	106	ND	D036	2	<0.10	<28.086	<0.50	<0.10		<<<<<<20	
Pentachlorophenol	106	ND	D037	100	<0.26	<73.0236	<1.3	<0.26		<<<<<<1200	
Pyridine	106	ND	D038	5	<0.25	<70.215	<1.3	<0.25		<<<<<<20	
METALS											
Arsenic	106	ND	D004	5	<5.00	<1.13	<0.500	<0.500		<<<<<<1	
Barium	105	2.23	D005	100	<5.00		<0.500	<0.500		<<<<<<20	
Cadmium	106	ND	D006	1	<0.500	<0.113	<0.050	<0.050		0.54	
Chromium	106	8.7	D007	5	<0.500	**197.6**	0.709	0.159		**16.4**	
Lead	106	ND	D008	5	<4.00	1.027	<0.400	<0.400		**50**	
Mercury	106	0.0339	D009	0.2	<0.040	0.019	0.004	<0.0008		<<<<<<0.033	
Selenium	106	ND	D010	1	<0.45	<0.708	<0.750	<0.750		<<<<<<0.5	
Silver	106	ND	D011	5	<0.500	0.108	<0.050	<0.050		1.4	
Misc											
Flash Point	103	>200	D001	140	>200	>200	>200	>200	>180		
pH	109	6.2	D002	2-12.5	6.07	5.40	6.36	4.64	6.4		
VOA											
1,1-Dichloroethylene	104	ND	D029	0.7	<1.0	0.166	<2.0	<0.20			<<<<<<2500
1,2-Dichloroethane	104	ND	D028	0.5	<1.0	<0.113	<2.0	<0.20			<<<<<<2500
1,4-Dichlorobenzene	103	ND	D027	7.5	<1.0	1.647	<2.0	<0.20			<<<<<<2500
Benzene	104	ND	D018	0.5	<1.0	<0.113	<2.0	<0.20			<<<<<<2500
Carbon Tetrachloride	104	ND	D019	0.5	<1.0	<0.113	<2.0	<0.20			<<<<<<2500
Chlorobenzene	104	ND	D021	100	<1.0	1.153	<2.0	<0.20			<<<<<<2500
Chloroform	104	ND	D022	6	<1.0	0.117	<2.0	<0.20			<<<<<<10000
Methyl Ethyl Ketone	104	3.4	D035	200	<2.5	<0.2825	<10.0	<1.0			<<<<<<2500
Tetrachloroethylene	104	23500	D039	0.7	**8177**	**1588**	**4979**	**87.16**			**270000**
Trichloroethylene	104	ND	D040	0.5	<1.0	**1.82**	<2.0	<0.20			<<<<<<2500
Vinyl Chloride	104	ND	D043	0.2	<1.0	<0.1065	<1.4	<0.14			<<<<<<1000

Dry Cleaner Bottoms

				Sample Number	C2G090250001	C2G090250001X	C2G160289001	C2G160289001R2	C2G160289001X	C2I250326001	C2I250326002
				Year	2002	2002	2002	2002	2002	2002	2002
Analysis	Number of Samples	90 UCL for the 50th Percentile	Waste Code	Reg Limit	Albuquerque,NM	Albuquerque,NM	Dodge City,KS	Dodge City,KS	Dodge City,KS	Boise,ID	Boise,ID
BNA											
2,4,5-Trichlorophenol	106	ND	D041	400	<<<<<<20		<<<<<<20			21	
2,4,6-Trichlorophenol	106	ND	D042	2	<<<<<<20		<<<<<<20			<<<<<<20	
2,4-Dinitrotoluene	106	ND	D030	0.13	<<<<<<20		**20**			<<<<<<20	
2-Methylphenol	106	ND	D023	200	<<<<<<20		44			<<<<<<20	
3+4-Methylphenol	106	ND	D024/25	200	<<<<<<20		<<<<<<20			33	
Hexachlorobenzene	106	ND	D032	0.13	<<<<<<20		<<<<<<20			<<<<<<20	
Hexachlorobutadiene	106	ND	D033	0.5	<<<<<<20		<<<<<<20			<<<<<<20	
Hexachloroethane	106	ND	D034	3	<<<<<<20		<<<<<<20			<<<<<<20	
Nitrobenzene	106	ND	D036	2	<<<<<<20		<<<<<<20			<<<<<<20	
Pentachlorophenol	106	ND	D037	100	<<<<<<600		<<<<<<600			<<<<<<600	
Pyridine	106	ND	D038	5	<<<<<<20		<<<<<<20			<<<<<<20	
METALS											
Arsenic	106	ND	D004	5	<<<<<<1		<<<<<<1			<<<<<<1	
Barium	105	2.23	D005	100	<<<<<<20		20.3			<<<<<<20	
Cadmium	106	ND	D006	1	<<<<<<0.5		0.72			<<<<<<0.5	
Chromium	106	8.7	D007	5	**13.4**		**32.8**			**7.5**	
Lead	106	ND	D008	5	1.4		**13.7**			4.5	
Mercury	106	0.0339	D009	0.2	<<<<<<0.033		<<<<<<0.033			<<<<<<0.033	
Selenium	106	ND	D010	1	0.56		<<<<<<0.5			<<<<<<0.5	
Silver	106	ND	D011	5	0.87		1.3			<<<<<<0.5	
Misc											
Flash Point	103	>200	D001	140	>200				>201	153	
pH	109	6.2	D002	2-12.5		8.7	7.2			6	
VOA											
1,1-Dichloroethylene	104	ND	D029	0.7	<<<<<<12000		<<<<<<500				<<<<<<0.5
1,2-Dichloroethane	104	ND	D028	0.5	<<<<<<12000		<<<<<<500				<<<<<<0.5
1,4-Dichlorobenzene	103	ND	D027	7.5	<<<<<<12000		<<<<<<500				0.7
Benzene	104	ND	D018	0.5	<<<<<<12000		<<<<<<500				<<<<<<0.5
Carbon Tetrachloride	104	ND	D019	0.5	<<<<<<12000		<<<<<<500				<<<<<<0.5
Chlorobenzene	104	ND	D021	100	<<<<<<12000		<<<<<<500				<<<<<<0.5
Chloroform	104	ND	D022	6	<<<<<<50000		<<<<<<2000				<<<<<<2
Methyl Ethyl Ketone	104	3.4	D035	200	<<<<<<12000		<<<<<<500				<<<<<<0.5
Tetrachloroethylene	104	23500	D039	0.7	**1100000**			**660000**			**420000**
Trichloroethylene	104	ND	D040	0.5	<<<<<<12000		<<<<<<500				**170**
Vinyl Chloride	104	ND	D043	0.2	<<<<<<5000		<<<<<<200				<<<<<<0.2

Dry Cleaner Bottoms

				Sample Number	C2J010152001	C2J300289001	C2J300289001R2	C2K130112001	C2K130112001R2	C2K130114001
				Year	2002	2002	2002	2002	2002	2002
Analysis	Number of Samples	90 UCL for the 50th Percentile	Waste Code	Reg Limit	Clackamas,OR	St_ Charles,MO	St_ Charles,MO	Grand Island,NE	Grand Island,NE	Grand Island,NE
BNA										
2,4,5-Trichlorophenol	106	ND	D041	400	59	<<<<<<20		<<20		<<0.05
2,4,6-Trichlorophenol	106	ND	D042	2	<<<<<20	<<<<<<20		<<20		<<0.05
2,4-Dinitrotoluene	106	ND	D030	0.13	<<<<<20	<<<<<<20		<<20		<<0.05
2-Methylphenol	106	ND	D023	200	56	<<<<<<20		<<20		<<0.05
3+4-Methylphenol	106	ND	D024/25	200	75	<<<<<<20		<<20		1.1
Hexachlorobenzene	106	ND	D032	0.13	<<<<<20	<<<<<<20		<<20		<<0.05
Hexachlorobutadiene	106	ND	D033	0.5	<<<<<20	<<<<<<20		<<20		<<0.05
Hexachloroethane	106	ND	D034	3	<<<<<20	<<<<<<20		<<20		<<0.05
Nitrobenzene	106	ND	D036	2	<<<<<20	<<<<<<20		<<20		<<0.05
Pentachlorophenol	106	ND	D037	100	<<<<<600	<<<<<<600		<<600		<<3
Pyridine	106	ND	D038	5	**29**	<<<<<<20		<<20		<<0.05
METALS										
Arsenic	106	ND	D004	5	<<<<<1	<<<<<<1		<<1		<<1
Barium	105	2.23	D005	100	<<<<<20	<<<<<<20		<<20		<<20
Cadmium	106	ND	D006	1	<<<<<0.5	<<<<<<0.5		<<0.5		<<0.5
Chromium	106	8.7	D007	5	0.55	**7.6**		**13.3**		<<0.5
Lead	106	ND	D008	5	<<<<<0.3	1.8		4		<<0.3
Mercury	106	0.0339	D009	0.2	<<<<<0.033	<<<<<<0.033		<<0.033		<<0.033
Selenium	106	ND	D010	1	<<<<<0.5	0.64		0.52		<<0.5
Silver	106	ND	D011	5	<<<<<0.5	<<<<<<0.5		<<0.5		<<0.5
Misc										
Flash Point	103	>200	D001	140	>201			142		140
pH	109	6.2	D002	2-12.5	3.2			6.4		6.4
VOA										
1,1-Dichloroethylene	104	ND	D029	0.7	<<<<<2.5		<<<<<<10000		<<10000	<<12
1,2-Dichloroethane	104	ND	D028	0.5	<<<<<2.5		<<<<<<10000		<<10000	<<12
1,4-Dichlorobenzene	103	ND	D027	7.5			<<<<<<10000		<<10000	<<12
Benzene	104	ND	D018	0.5	<<<<<2.5		<<<<<<10000		<<10000	<<12
Carbon Tetrachloride	104	ND	D019	0.5	<<<<<2.5		<<<<<<10000		<<10000	<<12
Chlorobenzene	104	ND	D021	100	<<<<<2.5		<<<<<<10000		<<10000	<<12
Chloroform	104	ND	D022	6	<<<<<2.5		<<<<<<40000		<<40000	<<13
Methyl Ethyl Ketone	104	3.4	D035	200	<<<<<2.5		<<<<<<10000		<<10000	<<12
Tetrachloroethylene	104	23500	D039	0.7	**57**		**960000**		**1400000**	**21000**
Trichloroethylene	104	ND	D040	0.5	<<<<<2.5		<<<<<<10000		<<10000	<<12
Vinyl Chloride	104	ND	D043	0.2	<<<<<5		<<<<<<4000		<<4000	<<12

Dry Cleaner Bottoms

Analysis	Number of Samples	90 UCL for the 50th Percentile	Waste Code	Reg Limit	C2K130147001	C2K130147002	C2K130147002R2	C2K130174001	C2K130174001R2	C2K130244001
				Year	2002	2002	2002	2002	2002	2002
					Sacramento,CA	Sacramento,CA	Sacramento,CA	Rohnert Park,CA	Rohnert Park,CA	Los Angeles,CA
BNA										
2,4,5-Trichlorophenol	106	ND	D041	400		<<<20		<<<<<<20		<<<<<20
2,4,6-Trichlorophenol	106	ND	D042	2		<<<20		<<<<<<20		<<<<<20
2,4-Dinitrotoluene	106	ND	D030	0.13		<<<20		<<<<<<20		<<<<<20
2-Methylphenol	106	ND	D023	200		<<<20		<<<<<<20		<<<<<20
3+4-Methylphenol	106	ND	D024/25	200		<<<20		<<<<<<20		<<<<<20
Hexachlorobenzene	106	ND	D032	0.13		<<<20		<<<<<<20		<<<<<20
Hexachlorobutadiene	106	ND	D033	0.5		<<<20		<<<<<<20		<<<<<20
Hexachloroethane	106	ND	D034	3		<<<20		<<<<<<20		<<<<<20
Nitrobenzene	106	ND	D036	2		<<<20		<<<<<<20		<<<<<20
Pentachlorophenol	106	ND	D037	100		<<<600		<<<<<<600		<<<<<600
Pyridine	106	ND	D038	5		<<<20		<<<<<<20		<<<<<20
METALS										
Arsenic	106	ND	D004	5		<<<1		<<<<<<1		<<<<<1
Barium	105	2.23	D005	100		<<<20		31		<<<<<20
Cadmium	106	ND	D006	1		<<<0.5		<<<<<<0.5		<<<<<0.5
Chromium	106	8.7	D007	5		**12.5**		**21.8**		0.79
Lead	106	ND	D008	5		**14.1**		**6.7**		0.33
Mercury	106	0.0339	D009	0.2		<<<0.033		0.062		<<<<<0.033
Selenium	106	ND	D010	1		<<<0.5		<<<<<<0.5		<<<<<0.5
Silver	106	ND	D011	5		<<<0.5		0.56		<<<<<0.5
Misc										
Flash Point	103	>200	D001	140	>200					>200
pH	109	6.2	D002	2-12.5	4.6					5.6
VOA										
1,1-Dichloroethylene	104	ND	D029	0.7			<<<20000		<<<<<<20000	
1,2-Dichloroethane	104	ND	D028	0.5			<<<20000		<<<<<<20000	
1,4-Dichlorobenzene	103	ND	D027	7.5			<<<80000		<<<<<<80000	
Benzene	104	ND	D018	0.5			<<<20000		<<<<<<20000	
Carbon Tetrachloride	104	ND	D019	0.5			<<<20000		<<<<<<20000	
Chlorobenzene	104	ND	D021	100			<<<20000		<<<<<<20000	
Chloroform	104	ND	D022	6			<<<80000		<<<<<<80000	
Methyl Ethyl Ketone	104	3.4	D035	200			<<<80000		<<<<<<80000	
Tetrachloroethylene	104	23500	D039	0.7			**990000**		**170000**	
Trichloroethylene	104	ND	D040	0.5			<<<20000		<<<<<<20000	
Vinyl Chloride	104	ND	D043	0.2			<<<8000		<<<<<<8000	

Dry Cleaner Bottoms

				Sample Number	C2K130244001R2	C2K130249001	C2K130343001	C2K130343001	C2K130345001	C2K130345001R2	C2K130376001
				Year	2002	2002	2002	2002	2002	2002	2002
Analysis	Number of Samples	90 UCL for the 50th Percentile	Waste Code	Reg Limit	Los Angeles,CA	Gering,NE	Oakland,CA	Santa Anna,CA	El Monte,CA	El Monte,CA	Wichita,KS
BNA											
2,4,5-Trichlorophenol	106	ND	D041	400		<<<<<0.5	<<<<<1.2	<<<<<1.2	<<<<<20		<<<<<20
2,4,6-Trichlorophenol	106	ND	D042	2		<<<<<0.5	<<<<<1.2	<<<<<1.2	<<<<<20		<<<<<20
2,4-Dinitrotoluene	106	ND	D030	0.13		<<<<<0.5	<<<<<1.2	<<<<<1.2	<<<<<20		<<<<<20
2-Methylphenol	106	ND	D023	200		<<<<<0.5	<<<<<1.2	<<<<<1.2	<<<<<20		<<<<<20
3+4-Methylphenol	106	ND	D024/25	200		<<<<<0.5	<<<<<1.2	<<<<<1.2	<<<<<20		<<<<<20
Hexachlorobenzene	106	ND	D032	0.13		<<<<<0.5	<<<<<1.2	<<<<<1.2	<<<<<20		<<<<<20
Hexachlorobutadiene	106	ND	D033	0.5		<<<<<0.5	<<<<<1.2	<<<<<1.2	<<<<<20		<<<<<20
Hexachloroethane	106	ND	D034	3		<<<<<0.5	<<<<<1.2	<<<<<1.2	<<<<<20		<<<<<20
Nitrobenzene	106	ND	D036	2		<<<<<0.5	<<<<<1.2	<<<<<1.2	<<<<<20		<<<<<20
Pentachlorophenol	106	ND	D037	100		<<<<<2.5	<<<<<6.2	<<<<<6.2	<<<<<600		<<<<<600
Pyridine	106	ND	D038	5		<<<<<1	<<<<<2.5	<<<<<2.5	<<<<<20		<<<<<20
METALS											
Arsenic	106	ND	D004	5		<<<<<0.5	<<<<<0.5	<<<<<0.5	<<<<<1		<<<<<1
Barium	105	2.23	D005	100		<<<<<10	<<<<<10	<<<<<10	<<<<<20		<<<<<20
Cadmium	106	ND	D006	1		<<<<<0.1	<<<<<0.1	<<<<<0.1	<<<<<0.5		<<<<<0.5
Chromium	106	8.7	D007	5		<<<<<0.5	<<<<<0.5	<<<<<0.5	**10.9**		**18.9**
Lead	106	ND	D008	5		<<<<<0.5	<<<<<0.5	<<<<<0.5	3.8		**6.4**
Mercury	106	0.0339	D009	0.2		<<<<<0.0002	<<<<<0.002	<<<<<0.002	0.061		<<<<<0.033
Selenium	106	ND	D010	1		<<<<<0.25	<<<<<0.25	<<<<<0.25	<<<<<0.5		<<<<<0.5
Silver	106	ND	D011	5		<<<<<0.5	<<<<<0.5	<<<<<0.5	0.8		<<<<<0.5
Misc											
Flash Point	103	>200	D001	140		>200	>201	>201	192		>200
pH	109	6.2	D002	2-12.5		7.1	6.1	6.1	6.1		5.7
VOA											
1,1-Dichloroethylene	104	ND	D029	0.7	<<<<<20000	<<<<<25	<<<<<2.5	<<<<<2.5		<<<<<20000	
1,2-Dichloroethane	104	ND	D028	0.5	<<<<<20000	<<<<<25	<<<<<2.5	<<<<<2.5		<<<<<20000	
1,4-Dichlorobenzene	103	ND	D027	7.5	<<<<<20000	<<<<<25	<<<<<2.5	<<<<<2.5		<<<<<20000	
Benzene	104	ND	D018	0.5	<<<<<20000	<<<<<25	<<<<<2.5	<<<<<2.5		<<<<<20000	
Carbon Tetrachloride	104	ND	D019	0.5	<<<<<20000	<<<<<25	<<<<<2.5	<<<<<2.5		<<<<<20000	
Chlorobenzene	104	ND	D021	100	<<<<<20000	<<<<<25	<<<<<2.5	<<<<<2.5		<<<<<20000	
Chloroform	104	ND	D022	6	<<<<<80000	<<<<<25	<<<<<2.5	<<<<<2.5		<<<<<80000	
Methyl Ethyl Ketone	104	3.4	D035	200	<<<<<20000	<<<<<25	<<<<<2.5	<<<<<2.5		<<<<<20000	
Tetrachloroethylene	104	23500	D039	0.7	**1900000**	**520**	**51**	**51**		**1800000**	
Trichloroethylene	104	ND	D040	0.5	<<<<<20000	<<<<<25	<<<<<2.5	<<<<<2.5		<<<<<20000	
Vinyl Chloride	104	ND	D043	0.2	<<<<<8000	<<<<<25	<<<<<2.5	<<<<<2.5		<<<<<8000	

Dry Cleaner Bottoms

				Sample Number	C2K130376001R2	C2K130388001	C2K130388001R2	C2K140303001	C2K140303001R2	C2K150375001
				Year	2002	2002	2002	2002	2002	2002
Analysis	Number of Samples	90 UCL for the 50th Percentile	Waste Code	Reg Limit	Wichita,KS	Highland,CA	Highland,CA	Salida,CA	Salida,CA	Santa Anna,CA
BNA										
2,4,5-Trichlorophenol	106	ND	D041	400		<<<<<20		<<<<<20		<<20
2,4,6-Trichlorophenol	106	ND	D042	2		<<<<<20		<<<<<20		<<20
2,4-Dinitrotoluene	106	ND	D030	0.13		<<<<<20		<<<<<20		<<20
2-Methylphenol	106	ND	D023	200		<<<<<20		<<<<<20		<<20
3+4-Methylphenol	106	ND	D024/25	200		<<<<<20		<<<<<20		<<20
Hexachlorobenzene	106	ND	D032	0.13		<<<<<20		<<<<<20		<<20
Hexachlorobutadiene	106	ND	D033	0.5		<<<<<20		<<<<<20		<<20
Hexachloroethane	106	ND	D034	3		<<<<<20		<<<<<20		<<20
Nitrobenzene	106	ND	D036	2		<<<<<20		<<<<<20		<<20
Pentachlorophenol	106	ND	D037	100		<<<<<600		<<<<<600		<<600
Pyridine	106	ND	D038	5		<<<<<20		<<<<<20		<<20
METALS										
Arsenic	106	ND	D004	5		<<<<<1		<<<<<1		<<1
Barium	105	2.23	D005	100		<<<<<20		<<<<<20		21.9
Cadmium	106	ND	D006	1		<<<<<0.5		<<<<<0.5		<<0.5
Chromium	106	8.7	D007	5		**10.7**		**8.7**		**26.4**
Lead	106	ND	D008	5		4.6		2.1		**5.6**
Mercury	106	0.0339	D009	0.2		<<<<<0.033		<<<<<0.033		0.15
Selenium	106	ND	D010	1		0.62		**1.8**		<<0.5
Silver	106	ND	D011	5		<<<<<0.5		<<<<<0.5		1.8
Misc										
Flash Point	103	>200	D001	140		>200		>201		>201
pH	109	6.2	D002	2-12.5		4.1		4.2		5.7
VOA										
1,1-Dichloroethylene	104	ND	D029	0.7	<<<<<20000		<<<<<20000		<<<<<20000	
1,2-Dichloroethane	104	ND	D028	0.5	<<<<<20000		<<<<<20000		<<<<<20000	
1,4-Dichlorobenzene	103	ND	D027	7.5	<<<<<80000		<<<<<80000		<<<<<80000	
Benzene	104	ND	D018	0.5	<<<<<20000		<<<<<20000		<<<<<20000	
Carbon Tetrachloride	104	ND	D019	0.5	<<<<<20000		<<<<<20000		<<<<<20000	
Chlorobenzene	104	ND	D021	100	<<<<<20000		<<<<<20000		<<<<<20000	
Chloroform	104	ND	D022	6	<<<<<80000		<<<<<80000		<<<<<80000	
Methyl Ethyl Ketone	104	3.4	D035	200	<<<<<80000		<<<<<80000		<<<<<80000	
Tetrachloroethylene	104	23500	D039	0.7	**1000000**		**1500000**		**940000**	
Trichloroethylene	104	ND	D040	0.5	<<<<<20000		<<<<<20000		<<<<<20000	
Vinyl Chloride	104	ND	D043	0.2	<<<<<8000		<<<<<8000		<<<<<8000	

Dry Cleaner Bottoms

				Sample Number	C2K150375001R2	C2K220121001	C2K260249001	C2K260249001R2	C2L130147001	C2L130147001R2
				Year	2002	2002	2002	2002	2002	2002
Analysis	Number of Samples	90 UCL for the 50th Percentile	Waste Code	Reg Limit	Santa Anna,CA	Omaha,NE	Clackamas,OR	Clackamas,OR	Sacramento,CA	Sacramento,CA
BNA										
2,4,5-Trichlorophenol	106	ND	D041	400		<<0.05	<20		<20	
2,4,6-Trichlorophenol	106	ND	D042	2		<<0.05	<20		<20	
2,4-Dinitrotoluene	106	ND	D030	0.13		<<0.05	<20		<20	
2-Methylphenol	106	ND	D023	200		<<0.05	<20		<20	
3+4-Methylphenol	106	ND	D024/25	200		<<0.05	<20		<20	
Hexachlorobenzene	106	ND	D032	0.13		<<0.05	<20		<20	
Hexachlorobutadiene	106	ND	D033	0.5		<<0.05	<20		<20	
Hexachloroethane	106	ND	D034	3		<<0.05	<20		<20	
Nitrobenzene	106	ND	D036	2		<<0.05	<20		<20	
Pentachlorophenol	106	ND	D037	100		<<3	<600		<600	
Pyridine	106	ND	D038	5		<<0.05	<20		<20	
METALS										
Arsenic	106	ND	D004	5		<<1	<1		<1	
Barium	105	2.23	D005	100		<<20	<20		<20	
Cadmium	106	ND	D006	1		<<0.5	<0.5		<0.5	
Chromium	106	8.7	D007	5		2.7	**17.1**		**89.4**	
Lead	106	ND	D008	5		2.7	**9.6**		**11.5**	
Mercury	106	0.0339	D009	0.2		<<0.033	0.073		0.068	
Selenium	106	ND	D010	1		0.54	0.72		0.82	
Silver	106	ND	D011	5		<<0.5	<0.5		<0.5	
Misc										
Flash Point	103	>200	D001	140			159		>200	
pH	109	6.2	D002	2-12.5			4		6.1	
VOA										
1,1-Dichloroethylene	104	ND	D029	0.7	<<20000	<<26		<20000		<20000
1,2-Dichloroethane	104	ND	D028	0.5	<<20000	<<26		<20000		<20000
1,4-Dichlorobenzene	103	ND	D027	7.5	<<80000	<<26		<80000		<80000
Benzene	104	ND	D018	0.5	<<20000	<<26		<20000		<20000
Carbon Tetrachloride	104	ND	D019	0.5	<<20000	<<26		<20000		<20000
Chlorobenzene	104	ND	D021	100	<<20000	<<26		<20000		<20000
Chloroform	104	ND	D022	6	<<80000	<<26		<80000		<80000
Methyl Ethyl Ketone	104	3.4	D035	200	<<80000	<<26		<80000		<80000
Tetrachloroethylene	104	23500	D039	0.7	**1100000**	**240000**		**930000**		**470000**
Trichloroethylene	104	ND	D040	0.5	<<20000	<<26		<20000		<20000
Vinyl Chloride	104	ND	D043	0.2	<<8000	<<26		<8000		<8000

Dry Cleaner Filter Powder PERC

				Sample Number	2013628	2013629	2013630	2015454	2015612	2016043	2017632
				Year	2000	2000	2000	2000	2000	2000	2000
Analysis	Number of Samples	90 UCL for the 50th Percentile	Waste Code	Reg Limit	Denton,TX	Denton,TX	Denton,TX	Omaha,NE	Albuquerque,NM	Sioux Falls,SD	Grand Island,NE
BNA											
2,4,5-Trichlorophenol	51	ND	D041	400	<0.040	<0.040	<0.040	<200	<0.10	<0.10	<0.10
2,4,6-Trichlorophenol	51	ND	D042	2	<0.040	<0.040	<0.040	<200	<0.10	<0.10	<0.10
2,4-Dinitrotoluene	51	ND	D030	0.13	<0.040	<0.040	<0.040	<40	<0.020	<0.020	<0.020
2-Methylphenol	51	ND	D023	200	<0.040	<0.040	<0.040	<200	<0.10	<0.10	<0.10
3+4-Methylphenol	53	ND	D024/25	200	<0.040	<0.040	<0.040	<200	<0.10	<0.10	<0.10
Hexachlorobenzene	51	ND	D032	0.13	<0.040	<0.040	<0.040	<40	<0.020	<0.020	<0.020
Hexachlorobutadiene	51	ND	D033	0.5	<0.040	<0.040	<0.040	<200	<0.10	<0.10	<0.10
Hexachloroethane	51	ND	D034	3	<0.040	<0.040	<0.040	<200	<0.10	<0.10	<0.10
Nitrobenzene	51	ND	D036	2	<0.040	<0.040	<0.040	<200	<0.10	<0.10	<0.10
Pentachlorophenol	51	ND	D037	100	<0.20	<0.20	<0.20	<200	<0.10	<0.10	<0.10
Pyridine	51	ND	D038	5	<0.040	<0.040	<0.040	<210	<0.10	<0.11	<0.11
METALS											
Arsenic	51	ND	D004	5	<0.500	<0.500	<0.500	<5.00	<0.500	<0.500	<0.500
Barium	51	0.381	D005	100	0.414	0.375	0.374	<0.500	0.729	0.157	0.526
Cadmium	51	ND	D006	1	<0.050	<0.050	<0.050	<0.500	<0.050	<0.050	<0.050
Chromium	51	0.090	D007	5	0.084	0.090	0.090	<0.500	<0.050	<0.050	0.252
Lead	51	ND	D008	5	<0.400	<0.400	<0.400	<4.00	<0.400	<0.400	<0.400
Mercury	51	ND	D009	0.2	<0.0008	<0.0008	<0.0008	0.165	<0.0008	<0.0008	<0.0008
Selenium	51	ND	D010	1	<0.750	<0.750	<0.750	<0.45	<0.750	<0.750	<0.750
Silver	51	ND	D011	5	<0.050	<0.050	<0.050	<0.500	<0.050	<0.050	<0.050
Misc											
Flash Point	44	>200	D001	140	>200	>200	>200	>200	>200	>200	>200
pH	50	6.93	D002	2-12.5	6.5	6.3	6.7	7.2	6.5	7.0	7.9
VOA											
1,1-Dichloroethylene	51	ND	D029	0.7	<2.0	<2.0	<2.0	<4.0	<2.0	<0.20	<2.0
1,2-Dichloroethane	51	ND	D028	0.5	<2.0	<2.0	<2.0	<2.0	<2.0	<0.20	<2.0
1,4-Dichlorobenzene	51	ND	D027	7.5	<2.0	<2.0	<2.0	<5.0	<2.0	<0.20	<2.0
Benzene	51	ND	D018	0.5	<2.0	<2.0	<2.0	<2.0	<2.0	<0.20	<2.0
Carbon Tetrachloride	51	ND	D019	0.5	<2.0	<2.0	<2.0	**8.5**	<2.0	<0.20	<2.0
Chlorobenzene	51	ND	D021	100	<2.0	<2.0	<2.0	<2.0	<2.0	<0.20	<2.0
Chloroform	51	ND	D022	6	<2.0	<2.0	<2.0	**7.3**	<2.0	<0.20	<2.0
Methyl Ethyl Ketone	51	ND	D035	200	<5.0	<5.0	<5.0	<5.0	<5.0	<0.50	<5.0
Tetrachloroethylene	51	150.4	D039	0.7	**180.7**	**341.6**	**307.5**	**17800**	**253**	**129.6**	**455.4**
Trichloroethylene	51	ND	D040	0.5	<2.0	<2.0	<2.0	**502**	<2.0	<0.20	<2.0
Vinyl Chloride	51	ND	D043	0.2	<1.4	<1.4	<1.4	<1.5	<1.4	<0.14	<1.4

Dry Cleaner Filter Powder PERC

				Sample Number	2018161	2018170	2021399	2025722	2033640	2042967	2045547	2050713
				Year	2000	2000	2000	2000	2000	2000	2000	2000
Analysis	Number of Samples	90 UCL for the 50th Percentile	Waste Code	Reg Limit	Edwardsville,KS	Wichita,KS	Fargo,ND	Garden City,GA	Omaha,NE	Sioux Falls,SD	St_ Charles,MO	Columbus,GA
BNA												
2,4,5-Trichlorophenol	51	ND	D041	400	<12.0376	<0.040	<0.50	<0.040	<0.10	<0.50	<0.10	<0.040
2,4,6-Trichlorophenol	51	ND	D042	2	<12.0376	<0.040	<0.50	<0.040	<0.10	<0.50	<0.10	<0.040
2,4-Dinitrotoluene	51	ND	D030	0.13	<2.4376	<0.040	<0.10	<0.040	<0.020	<0.10	<0.020	<0.0080
2-Methylphenol	51	ND	D023	200	<12.0376	<0.040	<50	<0.040	<10.0	<50	<10.0	<4.0
3+4-Methylphenol	53	ND	D024/25	200	<12.0376	<0.040	<50	<0.040	<10.0	<50	<10.0	<4.0
Hexachlorobenzene	51	ND	D032	0.13	<2.4376	<0.040	<0.10	<0.040	<0.020	<0.10	<0.020	<0.0080
Hexachlorobutadiene	51	ND	D033	0.5	<12.0376	<0.040	<0.50	<0.040	<0.10	<0.50	<0.10	<0.040
Hexachloroethane	51	ND	D034	3	<12.0376	<0.040	<0.50	<0.040	<0.10	<0.50	<0.10	<0.040
Nitrobenzene	51	ND	D036	2	<12.0376	<0.040	<0.50	<0.040	<0.10	<0.50	<0.10	<0.040
Pentachlorophenol	51	ND	D037	100	<12.188	<0.20	<0.50	<0.20	<0.10	<0.50	<0.10	<0.040
Pyridine	51	ND	D038	5	<12.0376	<0.040	<0.54	<0.040	<0.11	<0.50	<0.11	<0.043
METALS												
Arsenic	51	ND	D004	5	<0.77	<0.500	<0.500	<0.500	<0.500	<0.500	<0.500	<0.500
Barium	51	0.381	D005	100	0.296	0.084	0.273	0.363	0.337	0.269	0.683	0.847
Cadmium	51	ND	D006	1	<0.077	<0.050	0.06	<0.050	<0.050	<0.050	<0.050	<0.050
Chromium	51	0.090	D007	5	0.083	<0.050	0.253	<0.050	<0.050	<0.050	0.088	<0.050
Lead	51	ND	D008	5	<0.616	<0.400	<0.400	<0.400	<0.400	<0.400	<0.400	<0.400
Mercury	51	ND	D009	0.2	0.016	<0.0008	<0.0008	<1.00	<0.0008	<0.0008	<0.0008	<0.0008
Selenium	51	ND	D010	1	<0.70545	<0.750	<0.750	<0.750	<0.750	<0.750	<0.750	<0.750
Silver	51	ND	D011	5	<0.077	<0.050	<0.050	<0.050	<0.050	<0.050	<0.050	<0.050
Misc												
Flash Point	44	>200	D001	140	>200	>200	>200	>200	>200	>200	>200	>200
pH	50	6.93	D002	2-12.5	7.54	8.7	7.3	6.87	7.23	6.91	6.34	7.21
VOA												
1,1-Dichloroethylene	51	ND	D029	0.7	<2.12	<2.0	<2.0	<2.0	<2.0	<0.20	<0.20	<0.20
1,2-Dichloroethane	51	ND	D028	0.5	<2	<2.0	<2.0	<2.0	<2.0	<0.20	<0.20	<0.20
1,4-Dichlorobenzene	51	ND	D027	7.5	<2.18	<2.0	<2.0	<2.0	<2.0	<0.20	<0.20	<0.20
Benzene	51	ND	D018	0.5	<2	<2.0	<2.0	<2.0	<2.0	<0.20	<0.20	<0.20
Carbon Tetrachloride	51	ND	D019	0.5	<2	<2.0	<2.0	<2.0	<2.0	<0.20	<0.20	<0.20
Chlorobenzene	51	ND	D021	100	2.012	<2.0	<2.0	<2.0	<2.0	<0.20	<0.20	<0.20
Chloroform	51	ND	D022	6	<2	<2.0	<2.0	<2.0	<2.0	<0.20	<0.20	<0.20
Methyl Ethyl Ketone	51	ND	D035	200	<5	<5.0	<5.0	<5.0	<5.0	<0.50	<0.50	<0.50
Tetrachloroethylene	51	150.4	D039	0.7	**1389.1**	**102**	**53.34**	**150.4**	**123.8**	**201.2**	**129.1**	**12.53**
Trichloroethylene	51	ND	D040	0.5	**9.32**	<2.0	<2.0	<2.0	**8.131**	**9.398**	**1.108**	<0.20
Vinyl Chloride	51	ND	D043	0.2	<1.406	<1.4	<1.4	<1.4	<1.4	<0.14	<0.14	<0.14

Dry Cleaner Filter Powder PERC

				Sample Number	2050727	2054247	2058621	2078371	2078798	2080683	2081027	2081032
				Year	2000	2000	2000	2001	2001	2001	2001	2001
Analysis	Number of Samples	90 UCL for the 50th Percentile	Waste Code	Reg Limit	Pineville,LA	Morrow,GA	Norcross,GA	Omaha,NE	Fargo,ND	Sioux Falls,SD	Lackawanna,NY	Lackawanna,NY
BNA												
2,4,5-Trichlorophenol	51	ND	D041	400	<0.10	<0.10	<0.50	<0.50	<0.10	<0.040	<0.040	<0.040
2,4,6-Trichlorophenol	51	ND	D042	2	<0.10	<0.10	<0.50	<0.50	<0.10	<0.040	<0.040	<0.040
2,4-Dinitrotoluene	51	ND	D030	0.13	<0.020	<0.020	<0.10	<0.10	<0.020	<0.040	<0.040	<0.040
2-Methylphenol	51	ND	D023	200	<10.0	<10.0	<50	<50	<10.0	<0.040	<0.040	<0.040
3+4-Methylphenol	53	ND	D024/25	200	<10.0	<10.0	<50	<50	<10.0	<0.040	<0.040	<0.040
Hexachlorobenzene	51	ND	D032	0.13	<0.020	<0.020	<0.10	<0.10	<0.020	<0.040	<0.040	<0.040
Hexachlorobutadiene	51	ND	D033	0.5	<0.10	<0.10	<0.50	<0.50	<0.10	<0.040	<0.040	<0.040
Hexachloroethane	51	ND	D034	3	<0.10	<0.10	<0.50	<0.50	<0.10	<0.040	<0.040	<0.040
Nitrobenzene	51	ND	D036	2	<0.10	<0.10	<0.50	<0.50	<0.10	<0.040	<0.040	<0.040
Pentachlorophenol	51	ND	D037	100	<0.10	<0.10	<0.50	<0.50	<0.10	<0.20	<0.20	<0.20
Pyridine	51	ND	D038	5	<0.11	<0.10	<0.54	<0.54	<0.11	<0.061	<0.061	<0.061
METALS												
Arsenic	51	ND	D004	5	<0.500	<0.500	<0.500	<0.500	<0.500	<0.500	<0.500	<0.500
Barium	51	0.381	D005	100	0.273	1.32	0.381	0.108	0.701	0.313	0.266	0.262
Cadmium	51	ND	D006	1	<0.050	0.158	<0.050	<0.050	<0.050	<0.050	<0.050	<0.050
Chromium	51	0.090	D007	5	0.08	0.167	0.057	<0.050	0.058	<0.050	<0.050	<0.050
Lead	51	ND	D008	5	<0.400	<0.400	<0.400	<0.400	<0.400	<0.400	<0.400	<0.400
Mercury	51	ND	D009	0.2	<0.0008	<0.0008	<0.0008	<0.0008	<0.0008	<0.0008	<0.0008	<0.0008
Selenium	51	ND	D010	1	<0.750	<0.750	<0.750	<0.750	<0.750	<0.750	<0.750	<0.750
Silver	51	ND	D011	5	<0.050	<0.050	<0.050	<0.050	<0.050	<0.050	<0.050	<0.050
Misc												
Flash Point	44	>200	D001	140	>200		>200	>200	>200	>200	>200	>200
pH	50	6.93	D002	2-12.5	7.34	6.76	7.36	7.69	6.77	6.53	6.71	5.78
VOA												
1,1-Dichloroethylene	51	ND	D029	0.7	<0.20	<0.20	<2.0	<0.20	<0.20	<1.0	<1.0	<0.25
1,2-Dichloroethane	51	ND	D028	0.5	<0.20	<0.20	<2.0	<0.20	<0.20	<1.0	<1.0	<0.25
1,4-Dichlorobenzene	51	ND	D027	7.5	<0.20	<0.20	<2.0	<0.20	<0.20	<1.0	<1.0	<0.25
Benzene	51	ND	D018	0.5	<0.20	<0.20	<2.0	<0.20	<0.20	<1.0	<1.0	<0.25
Carbon Tetrachloride	51	ND	D019	0.5	<0.20	<0.20	<2.0	<0.20	<0.20	<1.0	<1.0	<0.25
Chlorobenzene	51	ND	D021	100	<0.20	<0.20	<2.0	<0.20	<0.20	<1.0	<1.0	<0.25
Chloroform	51	ND	D022	6	<0.20	<0.20	<2.0	<0.20	<0.20	<1.0	<1.0	<0.25
Methyl Ethyl Ketone	51	ND	D035	200	<0.50	<0.50	<5.0	<0.50	<0.50	<4.0	<4.0	<0.50
Tetrachloroethylene	51	150.4	D039	0.7	**180.5**	**9.23**	**131.9**	**150.8**	**543.5**	**321**	**188**	**122**
Trichloroethylene	51	ND	D040	0.5	<0.20	<0.20	<2.0	<0.20	<0.20	**2.81**	<1.0	<0.25
Vinyl Chloride	51	ND	D043	0.2	<0.14	<0.14	<1.4	<0.14	<0.14	<1.5	<1.5	<0.25

Dry Cleaner Filter Powder PERC

				Sample Number	2081033	2083103	2084690	2085457	2088820	2089781	2092410	2094860
				Year	2001	2001	2001	2001	2001	2001	2001	2001
Analysis	Number of Samples	90 UCL for the 50th Percentile	Waste Code	Reg Limit	Lackawanna,NY	Grand Island,NE	Garden City,GA	Clackamas,OR	Wichita,KS	Columbus,GA	Tulsa,OK	Morrow,GA
BNA												
2,4,5-Trichlorophenol	51	ND	D041	400	<0.040	<0.15	<0.040	<0.15	<0.15	<0.15	<0.15	<0.15
2,4,6-Trichlorophenol	51	ND	D042	2	<0.040	<0.15	<0.040	<0.15	<0.15	<0.15	<0.15	<0.15
2,4-Dinitrotoluene	51	ND	D030	0.13	<0.040	<0.020	<0.040	<0.020	<0.020	<0.020	<0.020	<0.020
2-Methylphenol	51	ND	D023	200	<0.040	<10.0	<0.040	<10.0	<10.0	<10.0	<10.0	<10.0
3+4-Methylphenol	53	ND	D024/25	200	<0.040	<10.0	<0.040	<10.0	<10.0	<10.0	<10.0	<10.0
Hexachlorobenzene	51	ND	D032	0.13	<0.040	<0.020	<0.040	<0.020	<0.020	<0.020	<0.020	<0.020
Hexachlorobutadiene	51	ND	D033	0.5	<0.040	<0.10	<0.040	<0.10	<0.050	<0.050	<0.050	<0.10
Hexachloroethane	51	ND	D034	3	<0.040	<0.10	<0.040	<0.10	<0.10	<0.10	<0.10	<0.10
Nitrobenzene	51	ND	D036	2	<0.040	<0.10	<0.040	<0.10	<0.10	<0.10	<0.10	<0.10
Pentachlorophenol	51	ND	D037	100	<0.20	<0.26	<0.20	<0.26	<0.26	<0.26	<0.26	<0.26
Pyridine	51	ND	D038	5	<0.061	<0.29	<0.040	<0.29	<0.29	<0.29	<0.29	<0.25
METALS												
Arsenic	51	ND	D004	5	<0.500	<0.500	<0.500	<0.500	<0.500	<0.500	<0.500	<0.500
Barium	51	0.381	D005	100	0.227	0.306	0.244	0.429	0.296	0.268	0.284	0.515
Cadmium	51	ND	D006	1	<0.050	<0.050	<0.050	<0.050	<0.050	<0.050	<0.050	0.101
Chromium	51	0.090	D007	5	<0.050	<0.050	0.060	0.319	<0.050	0.050	<0.050	0.273
Lead	51	ND	D008	5	<0.400	<0.400	<0.400	<0.400	<0.400	<0.400	<0.400	<0.400
Mercury	51	ND	D009	0.2	<0.0008	<0.0008	<0.0008	<0.0008	<0.0008	<0.0008	<0.0008	<0.0008
Selenium	51	ND	D010	1	<0.750	<0.750	<0.750	<0.750	<0.750	<0.750	<0.750	<0.750
Silver	51	ND	D011	5	<0.050	<0.050	<0.050	<0.050	<0.050	<0.050	<0.050	<0.050
Misc												
Flash Point	44	>200	D001	140	>200	>200	>200	>200	>200	>200	>200	>200
pH	50	6.93	D002	2-12.5	6.93	6.88	8.62	7.29	6.61	6.21	6.40	6.35
VOA												
1,1-Dichloroethylene	51	ND	D029	0.7	<1.0	<0.80	<2.0	<2.0	<2.0	<2.0	<2.0	<2.0
1,2-Dichloroethane	51	ND	D028	0.5	<1.0	<0.80	<2.0	<2.0	<2.0	<2.0	<2.0	<2.0
1,4-Dichlorobenzene	51	ND	D027	7.5	<1.0	<0.80	<2.0	<2.0	<2.0	<2.0	<2.0	<2.0
Benzene	51	ND	D018	0.5	<1.0	<0.80	<2.0	<2.0	<2.0	<2.0	<2.0	<2.0
Carbon Tetrachloride	51	ND	D019	0.5	<1.0	<0.80	<2.0	<2.0	<2.0	<2.0	<2.0	<2.0
Chlorobenzene	51	ND	D021	100	<1.0	<0.80	<2.0	<2.0	<2.0	<2.0	<2.0	<2.0
Chloroform	51	ND	D022	6	<1.0	<0.80	<2.0	<2.0	<2.0	<2.0	<2.0	<2.0
Methyl Ethyl Ketone	51	ND	D035	200	<4.0	<2.0	<5.0	<5.0	<5.0	<5.0	<5.0	<5.0
Tetrachloroethylene	51	150.4	D039	0.7	**119**	**166.8**	**163.5**	**85.53**	**118.2**	**99.34**	**80.97**	**94.5**
Trichloroethylene	51	ND	D040	0.5	<1.0	<0.80	<2.0	<2.0	**2.194**	<2.0	<2.0	<2.0
Vinyl Chloride	51	ND	D043	0.2	<1.5	<0.56	<1.4	<1.4	<1.4	<1.4	<1.4	<1.4

Dry Cleaner Filter Powder PERC

Analysis	Number of Samples	90 UCL for the 50th Percentile	Waste Code	Reg Limit	Dodge City,KS	Oklahoma City,OK	Avon,NY	Avon,NY	Greer,SC	Greer,SC	Garden City,GA	Columbus,GA	Morrow,GA
				Sample Number	2096468	2097092	2097331	2097346	2098940	2138344	2139790	2139980	2141686
				Year	2001	2001	2001	2001	2001	2002	2002	2002	2002
BNA													
2,4,5-Trichlorophenol	51	ND	D041	400	<0.15	<0.15	<0.15	<0.15	<0.15	<0.15	<0.15	<0.040	<0.15
2,4,6-Trichlorophenol	51	ND	D042	2	<0.15	<0.15	<0.15	<0.15	<0.15	<0.15	<0.15	<0.040	<0.15
2,4-Dinitrotoluene	51	ND	D030	0.13	<0.020	<0.020	<0.020	<0.020	<0.020	<0.020	<0.020	<0.040	<0.020
2-Methylphenol	51	ND	D023	200	<10.0	<10.0	<10.0	<10.0	<10.0	<10.0	<10.0	<0.040	<10.0
3+4-Methylphenol	53	ND	D024/25	200	<10.0	<10.0	<10.0	<10.0	<10.0	<10.0	<10.0	<0.040	<10.0
Hexachlorobenzene	51	ND	D032	0.13	<0.020	<0.020	<0.020	<0.020	<0.020	<0.020	<0.020	<0.040	<0.020
Hexachlorobutadiene	51	ND	D033	0.5	<0.050	<0.050	<0.050	<0.050	<0.10	<0.050	<0.050	<0.040	<0.050
Hexachloroethane	51	ND	D034	3	<0.10	<0.10	<0.10	<0.10	<0.10	<0.10	<0.10	<0.040	<0.10
Nitrobenzene	51	ND	D036	2	<0.10	<0.10	<0.10	<0.10	<0.10	<0.10	<0.10	<0.040	<0.10
Pentachlorophenol	51	ND	D037	100	<0.26	<0.26	<0.26	<0.26	<0.26	<0.26	<0.26	<0.20	<0.26
Pyridine	51	ND	D038	5	<0.25	<0.25	<0.25	<0.25	<0.25	<0.25	<0.25	<0.040	<0.25
METALS													
Arsenic	51	ND	D004	5	<0.500	<0.500	<0.500	<0.500	<0.500	<0.500	<0.500	<0.500	<0.500
Barium	51	0.381	D005	100	0.134	0.358	0.407	0.068	0.316	<0.500	<0.500	<0.500	<0.500
Cadmium	51	ND	D006	1	0.061	<0.050	<0.050	<0.050	<0.050	<0.050	<0.050	<0.050	<0.050
Chromium	51	0.090	D007	5	0.274	<0.050	<0.050	<0.050	<0.050	0.059	0.255	<0.050	0.092
Lead	51	ND	D008	5	<0.400	<0.400	<0.400	<0.400	<0.400	<0.400	<0.400	<0.400	<0.400
Mercury	51	ND	D009	0.2	<0.0008	<0.0008	<0.0008	<0.0008	<0.0008	<0.0008	<0.0008	<0.0008	<0.0008
Selenium	51	ND	D010	1	<0.750	<0.750	<0.750	<0.750	<0.750	<0.750	<0.750	<0.750	<0.750
Silver	51	ND	D011	5	<0.050	<0.050	<0.050	<0.050	<0.050	<0.050	<0.050	<0.050	<0.050
Misc													
Flash Point	44	>200	D001	140	>200	>200	>200	>200	>200		>200	>200	>200
pH	50	6.93	D002	2-12.5	7.24	7.21	6.77	7.12	9.42	6.15	6.69	6.67	5.93
VOA													
1,1-Dichloroethylene	51	ND	D029	0.7	<2.0	<2.0	<2.0	<0.20	<2.0	<0.20	<0.20	<0.20	<0.20
1,2-Dichloroethane	51	ND	D028	0.5	<2.0	<2.0	<2.0	<0.20	<2.0	<0.20	<0.20	<0.20	<0.20
1,4-Dichlorobenzene	51	ND	D027	7.5	<2.0	<2.0	<2.0	<0.20	<2.0	<0.20	<0.20	<0.20	<0.20
Benzene	51	ND	D018	0.5	<2.0	<2.0	<2.0	<0.20	<2.0	<0.20	<0.20	<0.20	<0.20
Carbon Tetrachloride	51	ND	D019	0.5	<2.0	<2.0	<2.0	<0.20	<2.0	<0.20	<0.20	<0.20	<0.20
Chlorobenzene	51	ND	D021	100	<2.0	<2.0	<2.0	<0.20	<2.0	<0.20	<0.20	<0.20	<0.20
Chloroform	51	ND	D022	6	<2.0	<2.0	<2.0	<0.20	<2.0	<0.20	<0.20	<0.20	<0.20
Methyl Ethyl Ketone	51	ND	D035	200	<5.0	<5.0	<5.0	<0.50	<5.0	<1.0	<1.0	<1.0	<1.0
Tetrachloroethylene	51	150.4	D039	0.7	**84.64**	**341.2**	**103.9**	**107.4**	**76.81**	**197.2**	**206.1**	**83.95**	**85.3**
Trichloroethylene	51	ND	D040	0.5	<2.0	<2.0	<2.0	0.476	<2.0	0.427	<0.20	<0.20	<0.20
Vinyl Chloride	51	ND	D043	0.2	<1.4	<1.4	<1.4	<0.14	<1.4	<0.14	<0.14	<0.14	<0.14

Dry Cleaner Filter Powder PERC

				Sample Number	2142344	C2F210335001	C2F210335001R2	C2G160287001	C2J010137001	C2J010137001R2	C2J300261001
				Year	2002	2002	2002	2002	2002	2002	2002
Analysis	Number of Samples	90 UCL for the 50th Percentile	Waste Code	Reg Limit	Norcross,GA	Pineville,LA	Pineville,LA	Dodge City,KS	Clackamas,OR	Clackamas,OR	Albuquerque,NM
BNA											
2,4,5-Trichlorophenol	51	ND	D041	400	<0.15	<<<<<<0.1		<<<<<<0.1	<<<<<<0.1		<<<<<<0.1
2,4,6-Trichlorophenol	51	ND	D042	2	<0.15	<<<<<<0.1		<<<<<<0.1	<<<<<<0.1		<<<<<<0.1
2,4-Dinitrotoluene	51	ND	D030	0.13	<0.020	<<<<<<0.1		<<<<<<0.1	<<<<<<0.1		<<<<<<0.1
2-Methylphenol	51	ND	D023	200	<10.0	<<<<<<0.1		<<<<<<0.1	<<<<<<0.1		<<<<<<0.1
3+4-Methylphenol	53	ND	D024/25	200	<10.0	<<<<<<0.1		<<<<<<0.1	<<<<<<0.1		<<<<<<0.1
Hexachlorobenzene	51	ND	D032	0.13	<0.020	<<<<<<0.1		<<<<<<0.1	<<<<<<0.1		<<<<<<0.1
Hexachlorobutadiene	51	ND	D033	0.5	<0.050	<<<<<<0.1		<<<<<<0.1	<<<<<<0.1		<<<<<<0.1
Hexachloroethane	51	ND	D034	3	<0.10	<<<<<<0.1		<<<<<<0.1	<<<<<<0.1		<<<<<<0.1
Nitrobenzene	51	ND	D036	2	<0.10	<<<<<<0.1		<<<<<<0.1	<<<<<<0.1		<<<<<<0.1
Pentachlorophenol	51	ND	D037	100	<0.26	<<<<<<0.5		<<<<<<0.5	<<<<<<0.5		<<<<<<0.5
Pyridine	51	ND	D038	5	<0.25	<<<<<<0.2		<<<<<<0.2	<<<<<<0.2		<<<<<<0.2
METALS											
Arsenic	51	ND	D004	5	<0.500	<<<<<<0.5		<<<<<<0.5	<<<<<<0.5		<<<<<<0.5
Barium	51	0.381	D005	100	<0.500	<<<<<<10		<<<<<<10	<<<<<<10		<<<<<<10
Cadmium	51	ND	D006	1	<0.050	<<<<<<0.1		<<<<<<0.1	<<<<<<0.1		<<<<<<0.1
Chromium	51	0.090	D007	5	<0.050	<<<<<<0.5		<<<<<<0.5	<<<<<<0.5		<<<<<<0.5
Lead	51	ND	D008	5	<0.400	<<<<<<0.5		<<<<<<0.5	<<<<<<0.5		<<<<<<0.5
Mercury	51	ND	D009	0.2	<0.0008	<<<<<<0.0002		<<<<<<0.0002	<<<<<<0.0002		<<<<<<0.0002
Selenium	51	ND	D010	1	<0.750	<<<<<<0.25		<<<<<<0.25	<<<<<<0.25		<<<<<<0.25
Silver	51	ND	D011	5	<0.050	<<<<<<0.5		<<<<<<0.5	<<<<<<0.5		<<<<<<0.5
Misc											
Flash Point	44	>200	D001	140	>200						
pH	50	6.93	D002	2-12.5	6.18	4.7		6.8	6.1		6
VOA											
1,1-Dichloroethylene	51	ND	D029	0.7	<0.10	<<<<<<1		<<<<<<5	<<<<<<0.05		<<<<<<3.8
1,2-Dichloroethane	51	ND	D028	0.5	<0.10	<<<<<<1		<<<<<<5	<<<<<<0.05		<<<<<<3.8
1,4-Dichlorobenzene	51	ND	D027	7.5	<0.10	<<<<<<1		<<<<<<5	<<<<<<0.05		<<<<<<3.8
Benzene	51	ND	D018	0.5	<0.10	<<<<<<1		<<<<<<5	<<<<<<0.05		<<<<<<3.8
Carbon Tetrachloride	51	ND	D019	0.5	<0.10	<<<<<<1		<<<<<<5	<<<<<<0.05		<<<<<<3.8
Chlorobenzene	51	ND	D021	100	<0.10	<<<<<<1		<<<<<<5	<<<<<<0.05		<<<<<<3.8
Chloroform	51	ND	D022	6	<0.10	<<<<<<1		<<<<<<5	<<<<<<0.05		<<<<<<3.8
Methyl Ethyl Ketone	51	ND	D035	200	<0.25	<<<<<<1		<<<<<<5		0.16	<<<<<<3.8
Tetrachloroethylene	51	150.4	D039	0.7	**85.9**		**15**	**140**		**2.3**	**91**
Trichloroethylene	51	ND	D040	0.5	<0.10	<<<<<<1		<<<<<<5	<<<<<<0.05		<<<<<<3.8
Vinyl Chloride	51	ND	D043	0.2	<0.10	<<<<<<1		<<<<<<5	<<<<<<0.05		<<<<<<3.8

Dry Cleaner Filter Powder PERC

				Sample Number	C2J300293001	C2J300293001R2	C2K130230001	C2K130235001	C2K130335001	C2K220114001	C2K220114001R2
				Year	2002	2002	2002	2002	2002	2002	2002
Analysis	Number of Samples	90 UCL for the 50th Percentile	Waste Code	Reg Limit	St_ Charles,MO	St_ Charles,MO	Grand Island,NE	Grand Island,NE	Wichita,KS	Omaha,NE	Omaha,NE
BNA											
2,4,5-Trichlorophenol	51	ND	D041	400	<<<<<<0.1		<<<<<0.1	<<<<<0.1	<<<<<0.1	<<<0.1	
2,4,6-Trichlorophenol	51	ND	D042	2	<<<<<<0.1		<<<<<0.1	<<<<<0.1	<<<<<0.1	<<<0.1	
2,4-Dinitrotoluene	51	ND	D030	0.13	<<<<<<0.1		<<<<<0.1	<<<<<0.1	<<<<<0.1	<<<0.1	
2-Methylphenol	51	ND	D023	200	<<<<<<0.1		<<<<<0.1	<<<<<0.1	<<<<<0.1	<<<0.1	
3+4-Methylphenol	53	ND	D024/25	200	<<<<<<0.1		<<<<<0.1	<<<<<0.1	<<<<<0.1	<<<0.1	
Hexachlorobenzene	51	ND	D032	0.13	<<<<<<0.1		<<<<<0.1	<<<<<0.1	<<<<<0.1	<<<0.1	
Hexachlorobutadiene	51	ND	D033	0.5	<<<<<<0.1		<<<<<0.1	<<<<<0.1	<<<<<0.1	<<<0.1	
Hexachloroethane	51	ND	D034	3	<<<<<<0.1		<<<<<0.1	<<<<<0.1	<<<<<0.1	<<<0.1	
Nitrobenzene	51	ND	D036	2	<<<<<<0.1		<<<<<0.1	<<<<<0.1	<<<<<0.1	<<<0.1	
Pentachlorophenol	51	ND	D037	100	<<<<<<0.5		<<<<<0.5	<<<<<0.5	<<<<<0.5	<<<0.5	
Pyridine	51	ND	D038	5	<<<<<<0.2		<<<<<0.2	<<<<<0.2	<<<<<0.2	<<<0.2	
METALS											
Arsenic	51	ND	D004	5	<<<<<<0.5		<<<<<0.5	<<<<<0.5	<<<<<0.5	<<<0.5	
Barium	51	0.381	D005	100	<<<<<<10		<<<<<10	<<<<<10	<<<<<10	<<<10	
Cadmium	51	ND	D006	1	<<<<<<0.1		<<<<<0.1	<<<<<0.1	<<<<<0.1	<<<0.1	
Chromium	51	0.090	D007	5	<<<<<<0.5		<<<<<0.5	<<<<<0.5	<<<<<0.5	<<<0.5	
Lead	51	ND	D008	5	<<<<<<0.5		<<<<<0.5	<<<<<0.5	<<<<<0.5	<<<0.5	
Mercury	51	ND	D009	0.2	<<<<<<0.0002		<<<<<0.0002	<<<<<0.0002	<<<<<0.0002	<<<0.0002	
Selenium	51	ND	D010	1	<<<<<<0.25		<<<<<0.25	<<<<<0.25	<<<<<0.25	<<<0.25	
Silver	51	ND	D011	5	<<<<<<0.5		<<<<<0.5	<<<<<0.5	<<<<<0.5	<<<0.5	
Misc											
Flash Point	44	>200	D001	140			**139**	**139**	**139**	**139**	
pH	50	6.93	D002	2-12.5			7.4	6.4	6.2	7.5	
VOA											
1,1-Dichloroethylene	51	ND	D029	0.7		<<<<<<10	<<<<<10	<<<<<5	<<<<<5		<<<4
1,2-Dichloroethane	51	ND	D028	0.5		<<<<<<10	<<<<<10	<<<<<5	<<<<<5		<<<4
1,4-Dichlorobenzene	51	ND	D027	7.5		<<<<<<10	<<<<<10	<<<<<5	<<<<<5		<<<4
Benzene	51	ND	D018	0.5		<<<<<<10	<<<<<10	<<<<<5	<<<<<5		<<<4
Carbon Tetrachloride	51	ND	D019	0.5		<<<<<<10	<<<<<10	<<<<<5	<<<<<5		<<<4
Chlorobenzene	51	ND	D021	100		<<<<<<10	<<<<<10	<<<<<5	<<<<<5		<<<4
Chloroform	51	ND	D022	6		<<<<<<10	<<<<<10	<<<<<5	<<<<<5		<<<4
Methyl Ethyl Ketone	51	ND	D035	200		<<<<<<10	<<<<<10	<<<<<5	5.1		<<<4
Tetrachloroethylene	51	150.4	D039	0.7		**240**	**240**	**94**	**99**		**130**
Trichloroethylene	51	ND	D040	0.5		<<<<<<10	<<<<<10	<<<<<5	<<<<<5		**5.8**
Vinyl Chloride	51	ND	D043	0.2		<<<<<<10	<<<<<10	<<<<<5	<<<<<5		<<<4

Dry Cleaner Filter Powder PERC

Analysis	Number of Samples	90 UCL for the 50th Percentile	Waste Code	Reg Limit	Omaha,NE	Clackamas,OR
				Sample Number	C2K220114001X	C2K260255001
				Year	2002	2002
BNA						
2,4,5-Trichlorophenol	51	ND	D041	400		<0.1
2,4,6-Trichlorophenol	51	ND	D042	2		<0.1
2,4-Dinitrotoluene	51	ND	D030	0.13		<0.1
2-Methylphenol	51	ND	D023	200		<0.1
3+4-Methylphenol	53	ND	D024/25	200		<0.1
Hexachlorobenzene	51	ND	D032	0.13		<0.1
Hexachlorobutadiene	51	ND	D033	0.5		<0.1
Hexachloroethane	51	ND	D034	3		<0.1
Nitrobenzene	51	ND	D036	2		<0.1
Pentachlorophenol	51	ND	D037	100		<0.5
Pyridine	51	ND	D038	5		<0.2
METALS						
Arsenic	51	ND	D004	5		<0.5
Barium	51	0.381	D005	100		<10
Cadmium	51	ND	D006	1		<0.1
Chromium	51	0.090	D007	5		<0.5
Lead	51	ND	D008	5		<0.5
Mercury	51	ND	D009	0.2		<0.0002
Selenium	51	ND	D010	1		<0.25
Silver	51	ND	D011	5		<0.5
Misc						
Flash Point	44	>200	D001	140	**139**	
pH	50	6.93	D002	2-12.5		6.5
VOA						
1,1-Dichloroethylene	51	ND	D029	0.7		<5
1,2-Dichloroethane	51	ND	D028	0.5		<5
1,4-Dichlorobenzene	51	ND	D027	7.5		<5
Benzene	51	ND	D018	0.5		<5
Carbon Tetrachloride	51	ND	D019	0.5		<5
Chlorobenzene	51	ND	D021	100		<5
Chloroform	51	ND	D022	6		<5
Methyl Ethyl Ketone	51	ND	D035	200		<5
Tetrachloroethylene	51	150.4	D039	0.7		**110**
Trichloroethylene	51	ND	D040	0.5		**5.5**
Vinyl Chloride	51	ND	D043	0.2		<5

Immersion Cleaner

Analysis	Number of Samples	90 UCL for the 50th Percentile	Waste Code	Reg Limit	Denton,TX	Gering,NE	Fargo,ND	Omaha,NE	Albuquerque,NM	Sioux Falls,SD	Edwardsville,KS	Grand Island,NE	Wichita,KS
				Sample Number	2008939	2011423	2015451	2015460	2015471	2016044	2017094	2017633	2018174
				Year	2000	2000	2000	2000	2000	2000	2000	2000	2000
BNA													
2,4,5-Trichlorophenol	104	ND	D041	400	<200	<200	<200	<200	<200	<200	<200	<200	<200
2,4,6-Trichlorophenol	104	ND	D042	2	<200	<200	<200	<200	<200	<200	<200	<200	<200
2,4-Dinitrotoluene	104	ND	D030	0.13	<40	<110	<40	<40	<40	<40	<40	<40	<40
2-Methylphenol	104	ND	D023	200	<200	<200	<200	<200	<200	<200	<200	<200	<200
3+4-Methylphenol	104	ND	D024/25	200	<200	<200	<200	<200	<200	<200	<200	<200	<200
Hexachlorobenzene	104	ND	D032	0.13	<40	<170	<40	<40	<40	<40	<40	<40	<40
Hexachlorobutadiene	104	ND	D033	0.5	<200	<200	<200	<200	<200	<200	<200	<200	<200
Hexachloroethane	104	ND	D034	3	<200	<200	<200	<200	<200	<200	<200	<200	<200
Nitrobenzene	104	ND	D036	2	<200	<200	<200	<200	<200	<200	<200	<200	<200
Pentachlorophenol	104	ND	D037	100	<200	<200	<200	<200	<200	<200	<200	<200	<200
Pyridine	104	ND	D038	5	<200	<210	<210	<200	<200	<210	<210	<210	<200
METALS													
Arsenic	104	ND	D004	5	<5.00	<5.00	<5.00	<5.00	<5.00	<5.00	<5.00	<5.00	<5.00
Barium	104	0.735	D005	100	0.735	<0.500	<0.500	0.543	<0.500	<0.500	**131**	<0.500	0.649
Cadmium	104	1.52	D006	1	<0.500	<0.500	**1.91**	**27.6**	**30.6**	**3.89**	**1.41**	<0.500	**20.8**
Chromium	104	ND	D007	5	<0.500	<0.500	<0.500	4.95	1.66	0.871	<0.500	<0.500	2.28
Lead	104	7.1	D008	5	**5.62**	<4.00	4.92	**140**	**51.0**	**42.5**	<4.00	<4.00	**343**
Mercury	104	ND	D009	0.2	<0.100	<0.10	<0.040	<0.040	<0.040	<0.10	<0.10	<0.10	0.163
Selenium	104	ND	D010	1	<0.45	<0.45	<0.008	<0.008	<0.008	<0.45	<0.45	<0.45	<0.008
Silver	104	ND	D011	5	<0.500	<0.500	<0.500	<0.500	<0.500	<0.500	<0.500	<0.500	2.81
Misc													
Flash Point	104	164	D001	140	>200	>200	155	142	145	>200	>200	>200	155
pH	107	9.83	D002	2-12.5	8.52	9.51	10.3	9.6	9.6	10	9.7	10.0	8.74
VOA													
1,1-Dichloroethylene	104	ND	D029	0.7	<4.0	<4.0	<4.0	<4.0	<4.0	<4.0	<4.0	<4.0	<4.0
1,2-Dichloroethane	104	ND	D028	0.5	<2.0	<2.0	<2.0	<2.0	<2.0	<2.0	<2.0	<2.0	<2.0
1,4-Dichlorobenzene	104	140	D027	7.5	**159**	**279**	**176**	**424**	**219**	**105**	**206**	**61**	**188**
Benzene	104	ND	D018	0.5	<2.0	<2.0	<2.0	<2.0	**6.8**	**4.2**	<2.0	<2.0	**3**
Carbon Tetrachloride	104	ND	D019	0.5	<2.0	<2.0	<2.0	<2.0	<2.0	<2.0	<2.0	<2.0	<2.0
Chlorobenzene	104	7.3	D021	100	9.9	14.6	14.6	16.8	10.6	8.8	13.3	4.5	4.5
Chloroform	104	ND	D022	6	<2.0	<2.0	<2.0	<2.0	<2.0	<2.0	<2.0	<2.0	<2.0
Methyl Ethyl Ketone	104	ND	D035	200	<5.0	<5.0	5.3	<5.0	<5.0	5.4	<5.0	<5.0	<5.0
Tetrachloroethylene	104	215	D039	0.7	**61.1**	**166**	**344**	**1170**	**36**	**240**	**50.2**	**82.3**	**34.8**
Trichloroethylene	104	9.1	D040	0.5	**3.6**	**18.2**	**16.6**	**6.8**	**3.8**	**17.7**	<2.0	**21.5**	**2**
Vinyl Chloride	104	ND	D043	0.2	<1.5	<1.5	<1.5	<1.5	<1.5	<1.5	<1.5	<1.5	<1.5

Immersion Cleaner

Analysis	Number of Samples	90 UCL for the 50th Percentile	Waste Code	Reg Limit	Garden City,GA	Salt Lake City,UT	Englewood,CO	Salida,CA	Sioux Falls,SD	St_ Charles,MO	Columbus,GA	Norcross,GA
				Sample Number	2025726	2029160	2039388	2039392	2042540	2045072	2050711	2050735
				Year	2000	2000	2000	2000	2000	2000	2000	2000
BNA												
2,4,5-Trichlorophenol	104	ND	D041	400	<200	<200	<200	<200	<200	<200	<200	<200
2,4,6-Trichlorophenol	104	ND	D042	2	<200	<200	<200	<200	<200	<200	<200	<200
2,4-Dinitrotoluene	104	ND	D030	0.13	<40	<40	<40	<40	<40	<40	<40	<40
2-Methylphenol	104	ND	D023	200	<200	<200	<200	<200	<200	<200	<200	<200
3+4-Methylphenol	104	ND	D024/25	200	<200	<200	<200	<200	<200	<200	<200	<200
Hexachlorobenzene	104	ND	D032	0.13	<40	<40	<40	<40	<40	<40	<40	<40
Hexachlorobutadiene	104	ND	D033	0.5	<200	<200	<200	<200	<200	<200	<200	<200
Hexachloroethane	104	ND	D034	3	<200	<200	<200	<200	<200	<200	<200	<200
Nitrobenzene	104	ND	D036	2	<200	<200	<200	<200	<200	<200	<200	<200
Pentachlorophenol	104	ND	D037	100	<200	<200	<200	<200	<200	<200	<200	<200
Pyridine	104	ND	D038	5	<210	<210	<210	<210	<210	<210	<210	<210
METALS												
Arsenic	104	ND	D004	5	<5.00	<5.00	<5.00	<5.00	<5.00	<5.00	<5.00	<5.00
Barium	104	0.735	D005	100	<0.500	<0.500	<0.500	<0.500	<0.500	<0.500	<0.500	<0.500
Cadmium	104	1.52	D006	1	<0.500	**1.68**	**1.13**	**1.07**	**2.51**	0.735	<0.500	**2.84**
Chromium	104	ND	D007	5	<0.500	<0.500	<0.500	<0.500	0.584	0.658	0.589	0.566
Lead	104	7.1	D008	5	<4.00	<4.00	<4.00	**7.42**	**20.5**	**92.4**	<4.00	<4.00
Mercury	104	ND	D009	0.2	<0.100	<0.10	<0.10	<0.100	<0.10	<0.10	<0.10	<0.10
Selenium	104	ND	D010	1	<0.45	<0.45	<0.45	<0.45	<0.45	<0.45	<0.45	<0.45
Silver	104	ND	D011	5	<0.500	<0.500	<0.500	<0.500	<0.500	<0.500	<0.500	<0.500
Misc												
Flash Point	104	164	D001	140	>200	164	158	150	153	>200	164	**128**
pH	107	9.83	D002	2-12.5	10.3	8.99	7.37	9.76	10.38	8.9	10.43	10.17
VOA												
1,1-Dichloroethylene	104	ND	D029	0.7	<0.40	<0.80	<4.0	<4.0	<4.0	<4.0	<1.6	<2.0
1,2-Dichloroethane	104	ND	D028	0.5	<0.20	<0.40	<2.0	<2.0	<2.0	<2.0	<0.80	<2.0
1,4-Dichlorobenzene	104	140	D027	7.5	**224**	**202**	**168**	**84.7**	**137**	**264**	**131**	**49.2**
Benzene	104	ND	D018	0.5	<0.20	**0.57**	**2.1**	<2.0	**4**	<2.0	<0.80	<2.0
Carbon Tetrachloride	104	ND	D019	0.5	<0.20	<0.40	<2.0	<2.0	<2.0	<2.0	<0.80	<2.0
Chlorobenzene	104	7.3	D021	100	19.1	7.4	5.3	<2.0	7.3	3.6	9.2	9.167
Chloroform	104	ND	D022	6	<0.20	<0.40	<2.0	<2.0	<2.0	<2.0	<0.80	<2.0
Methyl Ethyl Ketone	104	ND	D035	200	2	<1.0	<5.0	<5.0	15	<5.0	9.3	6.994
Tetrachloroethylene	104	215	D039	0.7	**382**	**45.3**	**31.8**	**193**	**163**	**4.2**	**393**	**350.7**
Trichloroethylene	104	9.1	D040	0.5	**7.6**	**5.7**	**8.8**	**23.4**	**35.5**	<2.0	**26.9**	**15.06**
Vinyl Chloride	104	ND	D043	0.2	<0.15	<0.30	<1.5	<1.5	<1.5	<1.5	<0.60	<1.4

Immersion Cleaner

Analysis	Number of Samples	90 UCL for the 50th Percentile	Waste Code	Reg Limit	Macon,GA	Pineville,LA	Greer,SC	Morrow,GA	Dodge City,KS	Salt Lake City,UT	Medley,FL	Sacramento,CA	Santa Anna,CA
				Sample Number	2051052	2051057	2052972	2054243	2055257	2059286	2060916	2066749	2067062
				Year	2000	2000	2000	2000	2000	2000	2000	2000	2000
BNA													
2,4,5-Trichlorophenol	104	ND	D041	400	<200	<200	<200	<200	<200	<200	<200	<200	<200
2,4,6-Trichlorophenol	104	ND	D042	2	<200	<200	<200	<200	<200	<200	<200	<200	<200
2,4-Dinitrotoluene	104	ND	D030	0.13	<40	<40	<40	<40	<40	<40	<40	<40	<40
2-Methylphenol	104	ND	D023	200	<200	<200	<200	<200	<200	<200	<200	<200	<200
3+4-Methylphenol	104	ND	D024/25	200	<200	<200	<200	<200	<200	<200	<200	<200	<200
Hexachlorobenzene	104	ND	D032	0.13	<40	<40	<40	<40	<40	<40	<40	<40	<40
Hexachlorobutadiene	104	ND	D033	0.5	<200	<200	<200	<200	<200	<200	<200	<200	<200
Hexachloroethane	104	ND	D034	3	<200	<200	<200	<200	<200	<200	<200	<200	<200
Nitrobenzene	104	ND	D036	2	<200	<200	<200	<200	<200	<200	<200	<200	<200
Pentachlorophenol	104	ND	D037	100	<200	<200	<200	<200	<200	<200	<200	<200	<200
Pyridine	104	ND	D038	5	<210	<210	<210	<210	<210	<210	<210	<210	<210
METALS													
Arsenic	104	ND	D004	5	<5.00	<5.00	<5.00	<5.00	<5.00	<5.00	<5.00	<5.00	<5.00
Barium	104	0.735	D005	100	<0.500	<0.500	<0.500	<0.500	0.768	1.53	<0.500	6.00	<0.500
Cadmium	104	1.52	D006	1	**123**	<0.500	0.662	<0.500	**9.29**	<0.500	**138**	**133**	**19.1**
Chromium	104	ND	D007	5	1.61	<0.500	<0.500	<0.500	0.653	<0.500	**5.22**	**8.88**	0.570
Lead	104	7.1	D008	5	**21.2**	<4.00	**113**	4.42	**38.3**	**35.3**	**5.68**	**68.6**	**17.6**
Mercury	104	ND	D009	0.2	<0.10	0.178	<0.100	<0.10	<0.100	<0.10	<0.10	<0.100	<0.10
Selenium	104	ND	D010	1	<0.45	<0.45	<0.45	<0.45	<0.45	<0.45	<0.45	0.73	<0.45
Silver	104	ND	D011	5	<0.500	<0.500	<0.500	<0.500	<0.500	<0.500	<0.500	<0.500	<0.500
Misc													
Flash Point	104	164	D001	140	>200	>200	>200	>200	>200	156	145	>200	>200
pH	107	9.83	D002	2-12.5	10.07	9.49	9.82	9.96	9.26	9.87	9.98	9.36	9.16
VOA													
1,1-Dichloroethylene	104	ND	D029	0.7	<0.40	<4.0	<0.40	<0.40	<4.0	<2.0	<2.0	<0.80	<1.6
1,2-Dichloroethane	104	ND	D028	0.5	<0.20	<2.0	<0.20	<0.20	<2.0	<1.0	<1.0	<0.40	<0.80
1,4-Dichlorobenzene	104	140	D027	7.5	**298**	**265**	**39.8**	**87.3**	**209**	**118**	**402**	**63.9**	**140**
Benzene	104	ND	D018	0.5	0.31	**4.3**	<0.20	0.25	**5.4**	<1.0	<1.0	0.49	**2.2**
Carbon Tetrachloride	104	ND	D019	0.5	<0.20	<2.0	<0.20	<0.20	<2.0	<1.0	<1.0	<0.40	<0.80
Chlorobenzene	104	7.3	D021	100	8.6	11.1	6.2	8.8	12.7	3.3	16.6	2.1	<0.80
Chloroform	104	ND	D022	6	<0.20	<2.0	<0.20	<0.20	<2.0	<1.0	<1.0	1.6	<0.80
Methyl Ethyl Ketone	104	ND	D035	200	3.8	<5.0	5.5	10	<5.0	<2.5	<2.5	1.5	<2.0
Tetrachloroethylene	104	215	D039	0.7	**304**	**60.5**	**193**	**370**	**363**	**66.8**	**80.9**	**117**	**96**
Trichloroethylene	104	9.1	D040	0.5	**71.6**	**5.6**	**18**	**18.3**	**7.1**	<1.0	**2.1**	**4**	**51.4**
Vinyl Chloride	104	ND	D043	0.2	<0.15	<1.5	<0.15	<0.15	<1.5	<0.75	<0.75	<0.30	<0.60

Immersion Cleaner

Analysis	Number of Samples	90 UCL for the 50th Percentile	Waste Code	Reg Limit	Oakland,CA	Salida,CA	Rohnert Park,CA	Fresno,CA	Gering,NE	Denton,TX	Fargo,ND	Omaha,NE	Sioux Falls,SD
				Sample Number	2067098	2067103	2067125	2068933	2075095	2075708	2078376	2078379	2080698
				Year	2000	2000	2000	2001	2001	2001	2001	2001	2001
BNA													
2,4,5-Trichlorophenol	104	ND	D041	400	<200	<200	<200	<200	<200	<200	<200	<200	<300
2,4,6-Trichlorophenol	104	ND	D042	2	<200	<200	<200	<200	<200	<200	<200	<200	<300
2,4-Dinitrotoluene	104	ND	D030	0.13	<40	<40	<40	<40	<40	<40	<40	<40	<40
2-Methylphenol	104	ND	D023	200	<200	<200	<200	<200	<200	<200	<200	<200	<400
3+4-Methylphenol	104	ND	D024/25	200	<200	<200	<200	<200	<200	<200	<200	<200	<500
Hexachlorobenzene	104	ND	D032	0.13	<40	<40	<40	<40	<40	<40	<40	<40	<40
Hexachlorobutadiene	104	ND	D033	0.5	<200	<200	<200	<200	<200	<200	<200	<200	<100
Hexachloroethane	104	ND	D034	3	<200	<200	<200	<200	<200	<200	<200	<200	<200
Nitrobenzene	104	ND	D036	2	<200	<200	<200	<200	<200	<200	<200	<200	<200
Pentachlorophenol	104	ND	D037	100	<200	<200	<200	<200	<200	<200	<200	<200	<520
Pyridine	104	ND	D038	5	<210	<210	<210	<210	<210	<210	<210	<210	<580
METALS													
Arsenic	104	ND	D004	5	<5.00	<5.00	<5.00	<5.00	<5.00	<5.00	<5.00	<5.00	<5.00
Barium	104	0.735	D005	100	0.584	<0.500	<0.500	<0.500	<0.500	<0.500	<0.500	1.10	<0.500
Cadmium	104	1.52	D006	1	**188**	**1.89**	<0.500	0.701	**1.52**	0.768	**1.41**	**11.9**	**1.55**
Chromium	104	ND	D007	5	3.92	<0.500	<0.500	<0.500	<0.500	<0.500	<0.500	0.591	0.925
Lead	104	7.1	D008	5	**76.5**	<4.00	<4.00	**14.2**	**6.84**	<4.00	**6.64**	**30.6**	**15.9**
Mercury	104	ND	D009	0.2	<0.10	<0.10	<0.10	<0.100	<0.10	<0.10	<0.10	<0.10	<0.10
Selenium	104	ND	D010	1	<0.45	<0.45	<0.45	<0.45	<0.45	<0.45	<0.45	<0.45	<0.45
Silver	104	ND	D011	5	<0.500	<0.500	<0.500	<0.500	<0.500	<0.500	<0.500	<0.500	<0.500
Misc													
Flash Point	104	164	D001	140	**133**	>200	>200	>200	146	153	>200	>200	160
pH	107	9.83	D002	2-12.5	9.22	9.25	9.35	9.38	9.06	8.81	9.94	9.70	9.80
VOA													
1,1-Dichloroethylene	104	ND	D029	0.7	<0.80	<0.80	<1.6	<0.80	<2.0	<2.0	<2.0	<2.0	<1.6
1,2-Dichloroethane	104	ND	D028	0.5	<0.40	<0.40	<0.80	<0.80	<1.0	<1.0	<1.0	<1.0	<0.80
1,4-Dichlorobenzene	104	140	D027	7.5	**65.3**	**129**	**118**	**26.03**	**221**	**197**	**167**	**166**	**131**
Benzene	104	ND	D018	0.5	0.4	<0.40	**2.3**	<0.80	**2.3**	<1.0	**2**	**1.3**	<0.80
Carbon Tetrachloride	104	ND	D019	0.5	<0.40	<0.40	<0.80	<0.80	<1.0	<1.0	<1.0	<1.0	<0.80
Chlorobenzene	104	7.3	D021	100	2.5	<0.40	3.2	3.379	9.8	9.3	16.4	17.2	12.3
Chloroform	104	ND	D022	6	<0.40	<0.40	<0.80	<0.80	<1.0	<1.0	<1.0	<1.0	<0.80
Methyl Ethyl Ketone	104	ND	D035	200	<1.0	<1.0	<2.0	3.279	<2.5	<2.5	4.7	3.2	4.3
Tetrachloroethylene	104	215	D039	0.7	**129**	**98.7**	**100**	**120**	**462**	**440**	**223**	**182**	**145**
Trichloroethylene	104	9.1	D040	0.5	**4.2**	**3.8**	**3.7**	**2.057**	**7.6**	**2.4**	**33.3**	**39.1**	**8.6**
Vinyl Chloride	104	ND	D043	0.2	<0.30	<0.30	<0.60	<0.56	<0.75	<0.75	<0.75	<0.75	<0.60

Immersion Cleaner

				Sample Number	2081041	2081097	2081098	2081099	2082492	2082506	2083126
				Year	2001	2001	2001	2001	2001	2001	2001
Analysis	Number of Samples	90 UCL for the 50th Percentile	Waste Code	Reg Limit	Lackawanna,NY	Lackawanna,NY	Lackawanna,NY	Lackawanna,NY	Albuquerque,NM	Grand Island,NE	Salt Lake City,UT
BNA											
2,4,5-Trichlorophenol	104	ND	D041	400	<300	<300	<300	<5.0	<300	<200	<300
2,4,6-Trichlorophenol	104	ND	D042	2	<300	<300	<300	<2.0	<300	<200	<300
2,4-Dinitrotoluene	104	ND	D030	0.13	<40	<40	<40	<0.13	<40	<40	<40
2-Methylphenol	104	ND	D023	200	<400	<400	<400	<5.0	<400	<200	<400
3+4-Methylphenol	104	ND	D024/25	200	<500	<500	<500	<5.0	<500	<200	<500
Hexachlorobenzene	104	ND	D032	0.13	<40	<40	<40	0.029544	<40	<40	<40
Hexachlorobutadiene	104	ND	D033	0.5	<200	<100	<100	<0.10	<200	<200	<200
Hexachloroethane	104	ND	D034	3	<200	<200	<200	<1.0	<200	<200	<200
Nitrobenzene	104	ND	D036	2	<200	<200	<200	<0.40	<200	<200	<200
Pentachlorophenol	104	ND	D037	100	<520	<520	<520	<5.0	<520	<200	<520
Pyridine	104	ND	D038	5	<580	<580	<580	<1.0	<580	<210	<580
METALS											
Arsenic	104	ND	D004	5	<5.00	<5.00	<5.00	<5.00	<5.00	<5.00	<5.00
Barium	104	0.735	D005	100	<0.500	<0.500	<0.500	<0.500	<0.500	<0.500	<0.500
Cadmium	104	1.52	D006	1	<0.500	<0.500	<0.500	<0.500	<0.500	**2.33**	<0.500
Chromium	104	ND	D007	5	<0.500	<0.500	<0.500	<0.500	<0.500	1.25	<0.500
Lead	104	7.1	D008	5	<4.00	<4.00	<4.00	<4.00	<4.00	**20.2**	<4.00
Mercury	104	ND	D009	0.2	<0.10	<0.10	<0.10	<0.10	<0.10	<0.10	<0.10
Selenium	104	ND	D010	1	<0.45	<0.45	<0.45	<0.45	<0.45	<0.45	<0.45
Silver	104	ND	D011	5	<0.500	<0.500	<0.500	<0.500	<0.500	<0.500	<0.500
Misc											
Flash Point	104	164	D001	140	158	>200	>200	**136**	153	>200	>200
pH	107	9.83	D002	2-12.5	9.83	9.91	9.78	6.21	9.23	9.85	9.61
VOA											
1,1-Dichloroethylene	104	ND	D029	0.7	<1.6	<1.6	<1.6	<1.6	<4.0	<4.0	<1.6
1,2-Dichloroethane	104	ND	D028	0.5	<0.80	<0.80	<0.80	<0.80	<2.0	<2.0	<0.80
1,4-Dichlorobenzene	104	140	D027	7.5	**91.9**	**114**	**108**	3.5	**205**	**162**	**182**
Benzene	104	ND	D018	0.5	<0.80	<0.80	<0.80	**1.9**	<2.0	**3.2**	**1**
Carbon Tetrachloride	104	ND	D019	0.5	<0.80	<0.80	<0.80	<0.80	<2.0	<2.0	<0.80
Chlorobenzene	104	7.3	D021	100	16.2	16.1	16.4	<0.80	6.8	11.7	10.5
Chloroform	104	ND	D022	6	<0.80	<0.80	<0.80	<0.80	<2.0	<2.0	<0.80
Methyl Ethyl Ketone	104	ND	D035	200	2.4	3	3.6	17.5	<5.0	7.1	2.9
Tetrachloroethylene	104	215	D039	0.7	**216**	**253**	**214**	**757**	**240**	**203**	**992**
Trichloroethylene	104	9.1	D040	0.5	**15.3**	**15.9**	**16.5**	**39.2**	<2.0	**35.5**	**10**
Vinyl Chloride	104	ND	D043	0.2	<0.60	<0.60	<0.60	<0.60	<1.5	<1.5	<0.60

Immersion Cleaner

Analysis	Number of Samples	90 UCL for the 50th Percentile	Waste Code	Reg Limit	Garden City,GA	Clackamas,OR	Fresno,CA	Wichita,KS	Macon,GA	Salida,CA	Oklahoma City,OK	Tulsa,OK	Englewood,CO
				Sample Number	2083425	2085321	2087156	2088688	2089015	2089549	2090899	2091968	2091970
				Year	2001	2001	2001	2001	2001	2001	2001	2001	2001
BNA													
2,4,5-Trichlorophenol	104	ND	D041	400	<300	<300	<300	<300	<300	<300	<300	<300	<300
2,4,6-Trichlorophenol	104	ND	D042	2	<300	<300	<300	<300	<300	<300	<300	<300	<300
2,4-Dinitrotoluene	104	ND	D030	0.13	<40	<40	<40	<40	<40	<40	<40	<40	<40
2-Methylphenol	104	ND	D023	200	<400	<400	<400	<400	<400	<400	<400	<400	<400
3+4-Methylphenol	104	ND	D024/25	200	<500	<500	<500	<500	<500	<500	<500	<500	<500
Hexachlorobenzene	104	ND	D032	0.13	<40	<40	<40	<40	<40	<40	<40	<40	<40
Hexachlorobutadiene	104	ND	D033	0.5	<200	<200	<200	<100	<100	<100	<200	<200	<200
Hexachloroethane	104	ND	D034	3	<200	<200	<200	<200	<200	<200	<200	<200	<200
Nitrobenzene	104	ND	D036	2	<200	<200	<200	<200	<200	<200	<200	<200	<200
Pentachlorophenol	104	ND	D037	100	<520	<520	<520	<520	<520	<520	<520	<520	<520
Pyridine	104	ND	D038	5	<580	<580	<580	<580	<580	<580	<580	<580	<580
METALS													
Arsenic	104	ND	D004	5	<5.00	<5.00	<5.00	<5.00	<5.00	<5.00	<5.00	<5.00	<5.00
Barium	104	0.735	D005	100	<0.500	<0.500	<0.500	<0.500	<0.500	1.01	<0.500	<0.500	<0.500
Cadmium	104	1.52	D006	1	<0.500	**371**	<0.500	<0.500	**3.95**	**26.7**	**4.74**	<0.500	**3.86**
Chromium	104	ND	D007	5	<0.500	**8.35**	<0.500	<0.500	<0.500	2.63	<0.500	<0.500	0.582
Lead	104	7.1	D008	5	<4.00	**28.4**	<4.00	**46.8**	**25.0**	**174**	<4.00	<4.00	**28.4**
Mercury	104	ND	D009	0.2	<0.10	<0.10	<0.10	<0.10	<0.10	<0.10	<0.10	<0.10	<0.10
Selenium	104	ND	D010	1	<0.45	<0.45	<0.45	<0.45	<0.45	<0.45	<0.45	<0.45	<0.45
Silver	104	ND	D011	5	<0.500	<0.500	<0.500	<0.500	<0.500	<0.500	<0.500	<0.500	<0.500
Misc													
Flash Point	104	164	D001	140	>200	>200	168	>200	>200	>200	>200	>200	>200
pH	107	9.83	D002	2-12.5	9.47	9.74	9.93	9.08	9.62	9.28	9.52	9.814	9.98
VOA													
1,1-Dichloroethylene	104	ND	D029	0.7	<1.6	<1.6	<1.6	<2.0	<4.0	<4.0	<2.0	<4.0	<0.80
1,2-Dichloroethane	104	ND	D028	0.5	<0.80	<0.80	<0.80	<1.0	<2.0	<2.0	<1.0	<2.0	<0.40
1,4-Dichlorobenzene	104	140	D027	7.5	**172**	**77.5**	**140**	**156**	**255**	**195**	**124**	**181**	**57**
Benzene	104	ND	D018	0.5	<0.80	**0.87**	**0.96**	**0.91**	<2.0	<2.0	**2.6**	<2.0	**0.71**
Carbon Tetrachloride	104	ND	D019	0.5	<0.80	<0.80	<0.80	<1.0	<2.0	<2.0	<1.0	<2.0	<0.40
Chlorobenzene	104	7.3	D021	100	17.1	1.4	5.5	11.8	17.1	6.8	5.2	8.9	4.8
Chloroform	104	ND	D022	6	<0.80	<0.80	<0.80	<1.0	<2.0	<2.0	<1.0	<2.0	<0.40
Methyl Ethyl Ketone	104	ND	D035	200	<2.0	<2.0	8.9	40.3	36.2	14.8	9.3	14.3	14.8
Tetrachloroethylene	104	215	D039	0.7	**175**	**69.6**	**305**	**1760**	**158**	**174**	**353**	**738**	**353**
Trichloroethylene	104	9.1	D040	0.5	**6.1**	**9.4**	**9**	**9.1**	**5.4**	**33.6**	**2.8**	**38.5**	**3.5**
Vinyl Chloride	104	ND	D043	0.2	<0.60	<0.60	<0.60	<0.75	<1.5	<1.5	<0.75	<1.5	<0.30

Immersion Cleaner

Analysis	Number of Samples	90 UCL for the 50th Percentile	Waste Code	Reg Limit	Sample Number 2091973	2094181	2094386	2094890	2096456	2096696	2098610	2099447	2113283
				Year	2001	2001	2001	2001	2001	2001	2001	2001	2001
					Sacramento,CA	Oakland,CA	Pineville,LA	Morrow,GA	Dodge City,KS	Medley,FL	Greer,SC	Rohnert Park,CA	Norcross,GA
BNA													
2,4,5-Trichlorophenol	104	ND	D041	400	<300	<300	<300	<300	<300	<300	<300	<300	<300
2,4,6-Trichlorophenol	104	ND	D042	2	<300	<300	<300	<300	<300	<300	<300	<300	<300
2,4-Dinitrotoluene	104	ND	D030	0.13	<40	<40	<40	<40	<40	<40	<40	<40	<40
2-Methylphenol	104	ND	D023	200	<400	<400	<400	<400	<400	<400	<400	<400	<400
3+4-Methylphenol	104	ND	D024/25	200	<500	<400	<400	<400	<400	<400	<400	<400	<400
Hexachlorobenzene	104	ND	D032	0.13	<40	<40	<40	<40	<40	<40	<40	<40	<40
Hexachlorobutadiene	104	ND	D033	0.5	<200	<200	<200	<200	<100	<100	<200	<200	<200
Hexachloroethane	104	ND	D034	3	<200	<200	<200	<200	<200	<200	<200	<200	<200
Nitrobenzene	104	ND	D036	2	<200	<200	<200	<200	<200	<200	<200	<200	<200
Pentachlorophenol	104	ND	D037	100	<520	<520	<520	<520	<520	<520	<520	<520	<520
Pyridine	104	ND	D038	5	<580	<500	<500	<500	<500	<500	<500	<500	<500
METALS													
Arsenic	104	ND	D004	5	<5.00	<5.00	<5.00	<5.00	<5.00	<5.00	<5.00	<5.00	<5.00
Barium	104	0.735	D005	100	<0.500	<0.500	<0.500	<0.500	<0.500	<0.500	<0.500	<0.500	0.726
Cadmium	104	1.52	D006	1	**5.95**	**43.7**	0.506	<0.500	**8.32**	**12.5**	<0.500	**2.58**	**13.3**
Chromium	104	ND	D007	5	<0.500	0.844	<0.500	<0.500	<0.500	1.47	<0.500	0.724	<0.500
Lead	104	7.1	D008	5	**6.22**	**43.8**	<4.00	<4.00	<4.00	**65.8**	<4.00	**213**	**12.7**
Mercury	104	ND	D009	0.2	<0.10	<0.10	<0.100	<0.100	<0.10	<0.10	<0.10	<010	<0.10
Selenium	104	ND	D010	1	<0.45	<0.45	<0.45	<0.45	<0.45	<0.45	<0.45	<0.45	<0.45
Silver	104	ND	D011	5	<0.500	<0.500	<0.500	<0.500	<0.500	<0.500	<0.500	<0.500	<0.500
Misc													
Flash Point	104	164	D001	140	>200	>200	>200	>200	>200	>200	>200	>200	155
pH	107	9.83	D002	2-12.5	9.74	9.34	9.90	10.09	9.87	8.43	9.99	10.30	9.75
VOA													
1,1-Dichloroethylene	104	ND	D029	0.7	<4.0	<0.40	<1.6	<0.40	<0.80	<1.6	<1.6	<0.80	<0.40
1,2-Dichloroethane	104	ND	D028	0.5	<2.0	<0.20	<0.80	<0.20	<0.40	<0.80	<0.80	<0.40	<0.20
1,4-Dichlorobenzene	104	140	D027	7.5	**162**	**36.4**	**155**	**64.8**	**86.5**	**176**	**151**	**215**	**131**
Benzene	104	ND	D018	0.5	<2.0	<0.20	<0.80	**0.8**	**1.5**	**11.1**	<0.80	**0.52**	<0.20
Carbon Tetrachloride	104	ND	D019	0.5	<2.0	<0.20	<0.80	<0.20	<0.40	<0.80	<0.80	<0.40	<0.20
Chlorobenzene	104	7.3	D021	100	4.3	2.2	<0.80	12	5.5	11.9	9.6	4.8	8
Chloroform	104	ND	D022	6	<2.0	<0.20	<0.80	<0.20	<0.40	<0.80	<0.80	<0.40	<0.20
Methyl Ethyl Ketone	104	ND	D035	200	<5.0	4.6	9.8	81.6	8.2	32.8	59.3	28.7	1.5
Tetrachloroethylene	104	215	D039	0.7	**218**	**64.4**	**176**	**263**	**435**	**134**	**197**	**123**	**102**
Trichloroethylene	104	9.1	D040	0.5	**5**	**3.4**	**5.6**	**20.4**	**2.8**	**125**	**17.5**	**4.2**	**18**
Vinyl Chloride	104	ND	D043	0.2	<1.5	<0.15	<0.60	<0.15	<0.30	<0.60	<0.60	<0.30	<0.15

Immersion Cleaner

				Sample Number	2118871	2118956	2119094	2123647	2126772	2134812	2137631	2138241	2138800
				Year	2001	2001	2001	2001	2001	2002	2002	2002	2002
Analysis	Number of Samples	90 UCL for the 50th Percentile	Waste Code	Reg Limit	Rohnert Park,CA	Salt Lake City,UT	Highland,CA	Oakland,CA	Salida,CA	Denton,TX	Medley,FL	Greer,SC	Tallahassee,FL
BNA													
2,4,5-Trichlorophenol	104	ND	D041	400	<300	<300	<5.0	<300	<300	<300	<300	<300	<300
2,4,6-Trichlorophenol	104	ND	D042	2	<300	<300	<2.0	<300	<300	<300	<300	<300	<300
2,4-Dinitrotoluene	104	ND	D030	0.13	<40	<40	<0.13	<40	<40	<40	<40	<40	<40
2-Methylphenol	104	ND	D023	200	<400	<400	<5.0	<400	<400	<400	<400	<400	<400
3+4-Methylphenol	104	ND	D024/25	200	<400	<400	<5.0	<400	<400	<400	<400	<400	<400
Hexachlorobenzene	104	ND	D032	0.13	<40	<40	<0.13	<40	<40	<40	<40	<40	<40
Hexachlorobutadiene	104	ND	D033	0.5	<200	<200	<0.20	<200	<200	<100	<100	<200	<200
Hexachloroethane	104	ND	D034	3	<200	<200	<0.50	<200	<200	<200	<200	<200	<200
Nitrobenzene	104	ND	D036	2	<200	<200	<0.40	<200	<200	<200	<200	<200	<200
Pentachlorophenol	104	ND	D037	100	<520	<520	<5.0	<520	<520	<520	<520	<520	<520
Pyridine	104	ND	D038	5	<500	<500	<1.0	<500	<500	<500	<500	<500	<500
METALS													
Arsenic	104	ND	D004	5	<5.00	<5.00	<5.00	<5.00	<5.00	<5.00	<5.00	<5.00	<5.00
Barium	104	0.735	D005	100	<0.500	<0.500	<0.500	<0.500	<0.500	<5.00	<5.00	<5.00	<5.00
Cadmium	104	1.52	D006	1	<0.500	<0.500	<0.500	**8.62**	**3.02**	**16.2**	**4540**	0.616	<0.500
Chromium	104	ND	D007	5	<0.500	<0.500	2.80	<0.500	<0.500	2.66	**13.7**	<0.500	<0.500
Lead	104	7.1	D008	5	<4.00	<4.00	<4.00	**11.8**	<4.00	**31.9**	<4.00	**20.8**	<4.00
Mercury	104	ND	D009	0.2	<0.10	<0.100	<0.10	<0.10	<0.10	<0.040	<0.040	<0.040	<0.040
Selenium	104	ND	D010	1	<0.45	<0.45	<0.45	<0.45	<0.45	0.45	<0.008	<0.45	<0.45
Silver	104	ND	D011	5	<0.500	<0.500	<0.500	<0.500	<0.500	<0.500	**5.84**	<0.500	<0.500
Misc													
Flash Point	104	164	D001	140	156	>200	>200	150	190	>200	168	152	>200
pH	107	9.83	D002	2-12.5	9.86	9.61	10.47	9.68	9.39	9.55	9.50	9.26	9.79
VOA													
1,1-Dichloroethylene	104	ND	D029	0.7	<0.40	<0.40	<0.20	<0.40	<0.40	<0.40	<0.40	<0.40	<0.40
1,2-Dichloroethane	104	ND	D028	0.5	<0.20	<0.20	<0.20	<0.20	<0.20	<0.20	<0.20	<0.20	<0.20
1,4-Dichlorobenzene	104	140	D027	7.5	**49.2**	**61.5**	<0.20	**31.9**	**52.4**	**73.1**	**69**	**81.1**	**72.2**
Benzene	104	ND	D018	0.5	**1.8**	**1.4**	<0.20	**1.5**	**1.3**	**1.6**	**4.1**	**0.71**	**0.61**
Carbon Tetrachloride	104	ND	D019	0.5	<0.20	<0.20	<0.20	<0.20	<0.20	<0.20	<0.20	<0.20	<0.20
Chlorobenzene	104	7.3	D021	100	6.8	7.3	<0.20	5.6	4.7	6.6	3.9	8.2	7.5
Chloroform	104	ND	D022	6	<0.20	<0.20	<0.20	<0.20	<0.20	<0.20	<0.20	<0.20	<0.20
Methyl Ethyl Ketone	104	ND	D035	200	5.2	3.5	<1.0	2.5	1.1	2.2	0.82	1.6	5.2
Tetrachloroethylene	104	215	D039	0.7	**333**	**348**	**2.029**	**296**	**215**	**197**	**67.1**	**222**	**220**
Trichloroethylene	104	9.1	D040	0.5	**9**	**8.5**	<0.20	**8.5**	**4.4**	**9.9**	**7.4**	**6.2**	**12**
Vinyl Chloride	104	ND	D043	0.2	<0.15	<0.15	<0.14	<0.15	<0.15	<0.15	<0.15	<0.15	<0.15

Immersion Cleaner

				Sample Number	2139771	2139775	2139940	2140193	2140382	2140396	2140424	2140459	2140945
				Year	2002	2002	2002	2002	2002	2002	2002	2002	2002
Analysis	Number of Samples	90 UCL for the 50th Percentile	Waste Code	Reg Limit	Salt Lake City,UT	Garden City,GA	Fresno,CA	Salida,CA	Macon,GA	Columbus,GA	Los Angeles,CA	El Monte,CA	Oakland,CA
BNA													
2,4,5-Trichlorophenol	104	ND	D041	400	<300	<300	<300	<300	<300	<300	<300	<5.0	<300
2,4,6-Trichlorophenol	104	ND	D042	2	<300	<300	<300	<300	<300	<300	<300	<2.0	<300
2,4-Dinitrotoluene	104	ND	D030	0.13	<40	<40	<40	<40	<40	<40	<40	<0.13	<40
2-Methylphenol	104	ND	D023	200	<400	<400	<400	<400	<400	<400	<400	<5.0	<400
3+4-Methylphenol	104	ND	D024/25	200	<400	<400	<400	<400	<400	<400	<400	<5.0	<400
Hexachlorobenzene	104	ND	D032	0.13	<40	<40	<40	<40	<40	<40	<40	<0.13	<40
Hexachlorobutadiene	104	ND	D033	0.5	<100	<100	<100	<100	<100	<100	<100	<0.20	<200
Hexachloroethane	104	ND	D034	3	<200	<200	<200	<200	<200	<200	<200	<0.50	<200
Nitrobenzene	104	ND	D036	2	<200	<200	<200	<200	<200	<200	<200	<0.40	<200
Pentachlorophenol	104	ND	D037	100	<520	<520	<520	<520	<520	<520	<520	<5.0	<520
Pyridine	104	ND	D038	5	<500	<500	<500	<500	<500	<500	<500	<1.0	<500
METALS													
Arsenic	104	ND	D004	5	<5.00	<5.00	<5.00	<5.00	<5.00	<5.00	<5.00	<0.500	<5.00
Barium	104	0.735	D005	100	<5.00	<5.00	<5.00	<5.00	<5.00	<5.00	<5.00	<0.500	<5.00
Cadmium	104	1.52	D006	1	<0.500	**2.42**	<0.500	<0.500	**1.74**	0.616	0.977	0.079	<0.500
Chromium	104	ND	D007	5	<0.500	<0.500	<0.500	<0.500	<0.500	<0.500	0.598	0.142	<0.500
Lead	104	7.1	D008	5	4.62	**15.2**	<4.00	**20.2**	<4.00	**6.71**	<4.00	**13.3**	<4.00
Mercury	104	ND	D009	0.2	<0.040	<0.040	0.076	0.097	<0.040	<0.040	<0.040	<0.0008	<0.10
Selenium	104	ND	D010	1	<0.45	<0.45	<0.45	<0.45	<0.45	<0.45	<0.45	<0.750	<0.45
Silver	104	ND	D011	5	<0.500	<0.500	<0.500	<0.500	<0.500	<0.500	<0.500	<0.050	<0.500
Misc													
Flash Point	104	164	D001	140	>200	>200	144	145	>200	144	>200	>200	>200
pH	107	9.83	D002	2-12.5	9.75	9.43	9.63	9.78	9.58	9.78	10.60	10.88	9.44
VOA													
1,1-Dichloroethylene	104	ND	D029	0.7	<0.40	<0.40	<0.40	<0.40	<0.40	<0.40	<2.0	<0.20	<2.0
1,2-Dichloroethane	104	ND	D028	0.5	<0.20	<0.20	<0.20	<0.20	<0.20	<0.20	<1.0	<0.20	<2.0
1,4-Dichlorobenzene	104	140	D027	7.5	**71**	**76.8**	**65.9**	**76.5**	**87.8**	**79.4**	<2.5	<0.20	**68.46**
Benzene	104	ND	D018	0.5	**0.86**	**0.54**	**0.79**	**1.1**	**0.54**	**1**	<1.0	<0.20	<2.0
Carbon Tetrachloride	104	ND	D019	0.5	<0.20	<0.20	<0.20	<0.20	<0.20	<0.20	<1.0	<0.20	<2.0
Chlorobenzene	104	7.3	D021	100	5.7	6.2	4.5	4.7	7.9	7.8	<1.0	<0.20	5.075
Chloroform	104	ND	D022	6	<0.20	<0.20	<0.20	<0.20	<0.20	<0.20	<1.0	<0.20	<2.0
Methyl Ethyl Ketone	104	ND	D035	200	1.4	1.5	0.86	0.71	<0.50	2.3	<2.5	<1.0	<10.0
Tetrachloroethylene	104	215	D039	0.7	**321**	**172**	**310**	**511**	**130**	**185**	**4.7**	<0.20	**148.7**
Trichloroethylene	104	9.1	D040	0.5	**14.8**	**5.1**	**5.6**	**6.3**	**7.8**	**10.8**	<1.0	<0.20	**2.951**
Vinyl Chloride	104	ND	D043	0.2	<0.15	<0.15	<0.15	<0.15	<0.15	<0.15	<0.75	<0.14	<1.4

Immersion Cleaner

				Sample Number	2141021	2141718	2142370	2145205	2145221	C2F210327001	C2F210327001X	C2G090267001
				Year	2002	2002	2002	2002	2002	2002	2002	2002
Analysis	**Number of Samples**	**90 UCL for the 50th Percentile**	**Waste Code**	**Reg Limit**	Norcross,GA	Morrow,GA	Santa Anna,CA	Rohnert Park,CA	Englewood,CO	Pineville,LA	Pineville,LA	Albuquerque,NM
BNA												
2,4,5-Trichlorophenol	104	ND	D041	400	<300	<300	<5.0	<300	<300	<<<<<<20		<<<<<<20
2,4,6-Trichlorophenol	104	ND	D042	2	<300	<300	<2.0	<300	<300	<<<<<<20		<<<<<<20
2,4-Dinitrotoluene	104	ND	D030	0.13	<40	<40	<0.13	<40	<40	<<<<<<20		<<<<<<20
2-Methylphenol	104	ND	D023	200	<400	<400	<5.0	<400	<400	<<<<<<20		<<<<<<20
3+4-Methylphenol	104	ND	D024/25	200	<400	<400	<5.0	<400	<400	<<<<<<20		<<<<<<20
Hexachlorobenzene	104	ND	D032	0.13	<40	<40	<0.13	<40	<40	<<<<<<20		<<<<<<20
Hexachlorobutadiene	104	ND	D033	0.5	<200	<200	<0.20	<200	<200	<<<<<<20		<<<<<<20
Hexachloroethane	104	ND	D034	3	<200	<200	<0.50	<200	<200	<<<<<<20		<<<<<<20
Nitrobenzene	104	ND	D036	2	<200	<200	<0.40	<200	<200	<<<<<<20		<<<<<<20
Pentachlorophenol	104	ND	D037	100	<520	<520	<5.0	<520	<520	<<<<<<20		<<<<<<600
Pyridine	104	ND	D038	5	<500	<500	<1.0	<500	<500	<<<<<<20		<<<<<<20
METALS												
Arsenic	104	ND	D004	5	<5.00	<5.00	<5.00	<5.00	<5.00	0.47		<<<<<<0.5
Barium	104	0.735	D005	100	<5.00	<5.00	<5.00	<5.00	<5.00	<<<<<<2		<<<<<<10
Cadmium	104	1.52	D006	1	**19.5**	**1.04**	<0.500	<0.500	0.940	1		<<<<<<0.25
Chromium	104	ND	D007	5	<0.500	<0.500	<0.500	<0.500	<0.500	0.39		<<<<<<0.25
Lead	104	7.1	D008	5	**14.6**	4.27	4.71	**15.6**	<4.00	**12**		0.79
Mercury	104	ND	D009	0.2	<0.040	<0.040	<0.040	0.076	<0.10	0.015		0.0042
Selenium	104	ND	D010	1	<0.45	<0.45	<0.45	<0.45	<0.45	0.74		0.83
Silver	104	ND	D011	5	<0.500	<0.500	<0.500	<0.500	<0.500	0.05		<<<<<<0.25
Misc												
Flash Point	104	164	D001	140	>200	146	>200	185	147	>180		
pH	107	9.83	D002	2-12.5	9.62	9.64	9.91	9.73	9.61		10.5	10.4
VOA												
1,1-Dichloroethylene	104	ND	D029	0.7	<0.40	<0.40	<0.20	<0.40	<0.40	<<<<<<10		<<<<<<50
1,2-Dichloroethane	104	ND	D028	0.5	<0.20	<0.20	<0.20	<0.20	<0.20	<<<<<<10		<<<<<<50
1,4-Dichlorobenzene	104	140	D027	7.5	**83.3**	**76.9**	<0.20	**20.3**	**26.3**	**160**		**230**
Benzene	104	ND	D018	0.5	**1**	**4.1**	<0.20	**0.62**	**0.79**	<<<<<<10		<<<<<<50
Carbon Tetrachloride	104	ND	D019	0.5	<0.20	<0.20	<0.20	<0.20	<0.20	<<<<<<10		<<<<<<50
Chlorobenzene	104	7.3	D021	100	6.8	6.6	<0.20	3.8	5.2	<<<<<<10		<<<<<<50
Chloroform	104	ND	D022	6	<0.20	<0.20	<0.20	<0.20	<0.20	<<<<<<10		<<<<<<50
Methyl Ethyl Ketone	104	ND	D035	200	1.6	1.3	<1.0	0.65	1.3	<<<<<<10		<<<<<<50
Tetrachloroethylene	104	215	D039	0.7	**134**	**104**	<0.20	**292**	**287**	**240**		**420**
Trichloroethylene	104	9.1	D040	0.5	**2.9**	**40.3**	<0.20	**10.8**	**10.9**	<<<<<<10		<<<<<<50
Vinyl Chloride	104	ND	D043	0.2	<0.15	<0.15	<0.14	<0.15	<0.15	<<<<<<10		<<<<<<50

Immersion Cleaner

Analysis	Number of Samples	90 UCL for the 50th Percentile	Waste Code	Reg Limit	Albuquerque,NM	Dodge City,KS	Boise,ID	Boise,ID	Boise,ID	Boise,ID	Clackamas,OR	Clackamas,OR
				Sample Number	C2G090267001X	C2G160294001	C2I250318001	C2I250318001X	C2I250318002	C2I250318002R2	C2J010120001	C2J010120002
				Year	2002	2002	2002	2002	2002	2002	2002	2002
BNA												
2,4,5-Trichlorophenol	104	ND	D041	400		<<<<<<20	69				61	
2,4,6-Trichlorophenol	104	ND	D042	2		<<<<<<20	<<<<<<20				<<<<<<20	
2,4-Dinitrotoluene	104	ND	D030	0.13		<<<<<<20	<<<<<<20				<<<<<<20	
2-Methylphenol	104	ND	D023	200		**810**	130				**270**	
3+4-Methylphenol	104	ND	D024/25	200		**290**	140				**220**	
Hexachlorobenzene	104	ND	D032	0.13		<<<<<<20	<<<<<<20				<<<<<<20	
Hexachlorobutadiene	104	ND	D033	0.5		<<<<<<20	<<<<<<20				<<<<<<20	
Hexachloroethane	104	ND	D034	3		<<<<<<20	<<<<<<20				<<<<<<20	
Nitrobenzene	104	ND	D036	2		<<<<<<20	<<<<<<20				<<<<<<20	
Pentachlorophenol	104	ND	D037	100		<<<<<<600	<<<<<<600				<<<<<<600	
Pyridine	104	ND	D038	5		<<<<<<20	**33**				**38**	
METALS												
Arsenic	104	ND	D004	5		<<<<<<1	0.31				0.61	
Barium	104	0.735	D005	100		<<<<<<20	<<<<<<2				<<<<<<10	
Cadmium	104	1.52	D006	1		**33.4**	0.35				<<<<<<0.25	
Chromium	104	ND	D007	5		**24**	0.085				<<<<<<0.25	
Lead	104	7.1	D008	5		**43.9**	0.33				0.37	
Mercury	104	ND	D009	0.2		0.012	0.0045				0.057	
Selenium	104	ND	D010	1		0.74	0.58				**1.1**	
Silver	104	ND	D011	5		<<<<<<0.5	<<<<<<0.05				<<<<<<0.25	
Misc												
Flash Point	104	164	D001	140	>201	156		153			159	
pH	107	9.83	D002	2-12.5		10.5	7.7				10.9	
VOA												
1,1-Dichloroethylene	104	ND	D029	0.7		<<<<<<50			<<<<<<0.25			<<<<<<0.5
1,2-Dichloroethane	104	ND	D028	0.5		<<<<<<50			<<<<<<0.25			<<<<<<0.5
1,4-Dichlorobenzene	104	140	D027	7.5		**200**				**53**		
Benzene	104	ND	D018	0.5		<<<<<<50			**0.72**			<<<<<<0.5
Carbon Tetrachloride	104	ND	D019	0.5		<<<<<<50			<<<<<<0.25			<<<<<<0.5
Chlorobenzene	104	7.3	D021	100		<<<<<<50			2.3			
Chloroform	104	ND	D022	6		<<<<<<50			<<<<<<1			<<<<<<2
Methyl Ethyl Ketone	104	ND	D035	200		<<<<<<50			<<<<<<0.25			<<<<<<0.5
Tetrachloroethylene	104	215	D039	0.7		**280**				**99**		
Trichloroethylene	104	9.1	D040	0.5		<<<<<<50				**3.5**		**2.7**
Vinyl Chloride	104	ND	D043	0.2		<<<<<<50			<<<<<<0.1			<<<<<<0.2

Immersion Cleaner

Analysis	Number of Samples	90 UCL for the 50th Percentile	Waste Code	Reg Limit	C2J010120002R2	C2J010315001	C2J010315002	C2J010315002R2	C2J040342001	C2J040342002	C2J040342002R2
				Year	2002	2002	2002	2002	2002	2002	2002
					Clackamas,OR	Gering,NE	Gering,NE	Gering,NE	Grand Island,NE	Grand Island,NE	Grand Island,NE
BNA											
2,4,5-Trichlorophenol	104	ND	D041	400		63			56		
2,4,6-Trichlorophenol	104	ND	D042	2		<<<<<<20			<<<<<<20		
2,4-Dinitrotoluene	104	ND	D030	0.13		<<<<<<20			<<<<<<20		
2-Methylphenol	104	ND	D023	200		**240**			70		
3+4-Methylphenol	104	ND	D024/25	200		**220**			93		
Hexachlorobenzene	104	ND	D032	0.13		<<<<<<20			<<<<<<20		
Hexachlorobutadiene	104	ND	D033	0.5		<<<<<<20			<<<<<<20		
Hexachloroethane	104	ND	D034	3		<<<<<<20			<<<<<<20		
Nitrobenzene	104	ND	D036	2		<<<<<<20			<<<<<<20		
Pentachlorophenol	104	ND	D037	100		<<<<<<600			<<<<<<600		
Pyridine	104	ND	D038	5		**36**			**28**		
METALS											
Arsenic	104	ND	D004	5		<<<<<<0.1			<<<<<<0.5		
Barium	104	0.735	D005	100		<<<<<<2			<<<<<<10		
Cadmium	104	1.52	D006	1		0.49			**5.4**		
Chromium	104	ND	D007	5		0.092			0.93		
Lead	104	7.1	D008	5		1.7			**33**		
Mercury	104	ND	D009	0.2		0.006			0.0058		
Selenium	104	ND	D010	1		0.12			**1.2**		
Silver	104	ND	D011	5		<<<<<<0.05			<<<<<<0.25		
Misc											
Flash Point	104	164	D001	140		161			166		
pH	107	9.83	D002	2-12.5		10.4			11.2		
VOA											
1,1-Dichloroethylene	104	ND	D029	0.7			<<<<<<0.25			<<<<<<0.25	
1,2-Dichloroethane	104	ND	D028	0.5			<<<<<<0.25			<<<<<<0.25	
1,4-Dichlorobenzene	104	140	D027	7.5	**110**			**150**			**170**
Benzene	104	ND	D018	0.5			**0.53**			0.41	
Carbon Tetrachloride	104	ND	D019	0.5			<<<<<<0.25			<<<<<<0.25	
Chlorobenzene	104	7.3	D021	100	3			6.2			10
Chloroform	104	ND	D022	6			<<<<<<1			<<<<<<1	
Methyl Ethyl Ketone	104	ND	D035	200			<<<<<<0.25				4.3
Tetrachloroethylene	104	215	D039	0.7	**190**			**270**			**250**
Trichloroethylene	104	9.1	D040	0.5			**8.4**				**16**
Vinyl Chloride	104	ND	D043	0.2			<<<<<<0.1			<<<<<<0.1	

Immersion Cleaner

Analysis	Number of Samples	90 UCL for the 50th Percentile	Waste Code	Reg Limit	Nepean,ON	Nepean,ON	Nepean,ON	St_ Charles,MO	St_ Charles,MO	Salt Lake City,UT	Oshawa,ON
				Sample Number	C2J170222001	C2J170222001R2	C2J170222002	C2K010363001R2	C2K010363002	C2K060110001	C2K080237001
				Year	2002	2002	2002	2002	2002	2002	2002
BNA											
2,4,5-Trichlorophenol	104	ND	D041	400			100		<<<<<<20	<<<<<<1	
2,4,6-Trichlorophenol	104	ND	D042	2			**20**		<<<<<<20	<<<<<<1	
2,4-Dinitrotoluene	104	ND	D030	0.13			<<<<<<20		<<<<<<20	<<<<<<1	
2-Methylphenol	104	ND	D023	200			190		<<<<<<20	<<<<<<1	
3+4-Methylphenol	104	ND	D024/25	200			**270**		<<<<<<20	<<<<<<1	
Hexachlorobenzene	104	ND	D032	0.13			<<<<<<20		<<<<<<20	<<<<<<1	
Hexachlorobutadiene	104	ND	D033	0.5			<<<<<<20		<<<<<<20	<<<<<<1	
Hexachloroethane	104	ND	D034	3			<<<<<<20		<<<<<<20	<<<<<<1	
Nitrobenzene	104	ND	D036	2			<<<<<<20		<<<<<<20	<<<<<<1	
Pentachlorophenol	104	ND	D037	100			<<<<<<600		<<<<<<600	<<<<<<60	
Pyridine	104	ND	D038	5			**56**		<<<<<<20	<<<<<<1	
METALS											
Arsenic	104	ND	D004	5			0.54		<<<<<<0.5	<<<<<<0.5	
Barium	104	0.735	D005	100			<<<<<<10		<<<<<<10	<<<<<<10	
Cadmium	104	1.52	D006	1			0.38		**11.3**	0.56	
Chromium	104	ND	D007	5			**14**		3.9	0.63	
Lead	104	7.1	D008	5			**14.7**		**6.8**	1.7	
Mercury	104	ND	D009	0.2			0.0025		0.005	<<<<<<0.002	
Selenium	104	ND	D010	1			**1.4**		0.55	0.63	
Silver	104	ND	D011	5			<<<<<<0.25		<<<<<<0.25	<<<<<<0.25	
Misc											
Flash Point	104	164	D001	140	166				148	148	149
pH	107	9.83	D002	2-12.5	10.4				11	6.9	10.2
VOA											
1,1-Dichloroethylene	104	ND	D029	0.7		<<<<<<5		<<<<<<5		<<<<<<0.25	
1,2-Dichloroethane	104	ND	D028	0.5		<<<<<<5		<<<<<<5		<<<<<<0.25	
1,4-Dichlorobenzene	104	140	D027	7.5		**210**		**110**		**14**	
Benzene	104	ND	D018	0.5		<<<<<<5		<<<<<<5		<<<<<<0.25	
Carbon Tetrachloride	104	ND	D019	0.5		<<<<<<5		<<<<<<5		<<<<<<0.25	
Chlorobenzene	104	7.3	D021	100		11		7.6		1.2	
Chloroform	104	ND	D022	6		<<<<<<20		<<<<<<20		<<<<<<1	
Methyl Ethyl Ketone	104	ND	D035	200		<<<<<<5		5.9		<<<<<<0.25	
Tetrachloroethylene	104	215	D039	0.7		**210**		**290**		**24**	
Trichloroethylene	104	9.1	D040	0.5		**22**		**11**		**1.4**	
Vinyl Chloride	104	ND	D043	0.2		<<<<<<2		<<<<<<2		<<<<<<0.1	

Immersion Cleaner

Analysis	Number of Samples	90 UCL for the 50th Percentile	Waste Code	Reg Limit	C2K080237001R2	C2K080237002	C2K080360001	C2K080374001	C2K130192001	C2K130192001R2	C2K130263001
				Year	2002	2002	2002	2002	2002	2002	2002
				Sample Number	Oshawa,ON	Oshawa,ON	Los Angeles,CA	El Monte,CA	Sacramento,CA	Sacramento,CA	Highland,CA
BNA											
2,4,5-Trichlorophenol	104	ND	D041	400		<<<<<<20	<<<<<0.05	<<<<<0.05	<<<<<20		<<<<<20
2,4,6-Trichlorophenol	104	ND	D042	2		<<<<<<20	<<<<<0.05	<<<<<0.05	<<<<<20		<<<<<20
2,4-Dinitrotoluene	104	ND	D030	0.13		<<<<<<20	<<<<<0.05	<<<<<0.05	<<<<<20		<<<<<20
2-Methylphenol	104	ND	D023	200		<<<<<<20	0.08	<<<<<0.05	<<<<<20		<<<<<20
3+4-Methylphenol	104	ND	D024/25	200		70	0.27	0.052	75		<<<<<20
Hexachlorobenzene	104	ND	D032	0.13		<<<<<<20	<<<<<0.05	<<<<<0.05	<<<<<20		<<<<<20
Hexachlorobutadiene	104	ND	D033	0.5		<<<<<<20	<<<<<0.05	<<<<<0.05	<<<<<20		<<<<<20
Hexachloroethane	104	ND	D034	3		<<<<<<20	<<<<<0.05	<<<<<0.05	<<<<<20		<<<<<20
Nitrobenzene	104	ND	D036	2		<<<<<<20	0.66	<<<<<0.05	<<<<<20		<<<<<20
Pentachlorophenol	104	ND	D037	100		<<<<<<600	<<<<<3	<<<<<3	<<<<<600		<<<<<600
Pyridine	104	ND	D038	5		<<<<<<20	<<<<<0.05	<<<<<0.05	<<<<<20		<<<<<20
METALS											
Arsenic	104	ND	D004	5		<<<<<<0.5	<<<<<0.5	<<<<<0.5	<<<<<0.5		<<<<<0.5
Barium	104	0.735	D005	100		<<<<<<10	<<<<<10	<<<<<10	<<<<<10		<<<<<10
Cadmium	104	1.52	D006	1		**4.6**	<<<<<0.25	<<<<<0.25	**37.4**		<<<<<0.25
Chromium	104	ND	D007	5		0.48	<<<<<0.25	<<<<<0.25	0.67		<<<<<0.25
Lead	104	7.1	D008	5		**7.1**	2.2	<<<<<0.15	**13.7**		0.45
Mercury	104	ND	D009	0.2		0.0048	<<<<<0.002	<<<<<0.002	0.025		<<<<<0.002
Selenium	104	ND	D010	1		0.91	<<<<<0.25	<<<<<0.25	0.96		<<<<<0.25
Silver	104	ND	D011	5		<<<<<<0.25	<<<<<0.25	<<<<<0.25	<<<<<0.25		<<<<<0.25
Misc											
Flash Point	104	164	D001	140			140	145	146		142
pH	107	9.83	D002	2-12.5			10.9	11	11		11.9
VOA											
1,1-Dichloroethylene	104	ND	D029	0.7	<<<<<<5		<<<<<0.5	<<<<<0.5		<<<<<5	<<<<<0.5
1,2-Dichloroethane	104	ND	D028	0.5	<<<<<<5		<<<<<0.5	<<<<<0.5		<<<<<5	<<<<<0.5
1,4-Dichlorobenzene	104	140	D027	7.5	**160**		<<<<<0.5	<<<<<2		**140**	<<<<<2
Benzene	104	ND	D018	0.5	<<<<<<5		<<<<<0.5	<<<<<0.5		<<<<<5	<<<<<0.5
Carbon Tetrachloride	104	ND	D019	0.5	<<<<<<5		<<<<<0.5	<<<<<0.5		<<<<<5	<<<<<0.5
Chlorobenzene	104	7.3	D021	100	6.9		<<<<<0.5	<<<<<0.5		<<<<<5	<<<<<0.5
Chloroform	104	ND	D022	6	<<<<<<20		<<<<<2	<<<<<2		<<<<<20	<<<<<2
Methyl Ethyl Ketone	104	ND	D035	200	<<<<<<5		<<<<<0.5	<<<<<2		<<<<<5	<<<<<2
Tetrachloroethylene	104	215	D039	0.7	**130**		**5.7**	<<<<<0.5		**350**	<<<<<0.5
Trichloroethylene	104	9.1	D040	0.5	**13**		<<<<<0.5	<<<<<0.5		**29**	<<<<<0.5
Vinyl Chloride	104	ND	D043	0.2	<<<<<<2		<<<<<0.2	<<<<<0.2		<<<<<2	<<<<<0.2

Immersion Cleaner

Analysis	Number of Samples	90 UCL for the 50th Percentile	Waste Code	Reg Limit	C2K130278001	C2K130278001R2	C2K130366001	C2K130402001	C2K140132001	C2K140156001	C2K140156001R2
				Year	2002	2002	2002	2002	2002	2002	2002
					Rohnert Park,CA	Rohnert Park,CA	Wichita,KS	Santa Anna,CA	Sacramento,CA	Oakland,CA	Oakland,CA
BNA											
2,4,5-Trichlorophenol	104	ND	D041	400	<20		<<20	<<<<<20	<20	<20	
2,4,6-Trichlorophenol	104	ND	D042	2	<20		<<20	<<<<<20	<20	<20	
2,4-Dinitrotoluene	104	ND	D030	0.13	<20		<<20	<<<<<20	<20	<20	
2-Methylphenol	104	ND	D023	200	<20		<<20	<<<<<20	<20	120	
3+4-Methylphenol	104	ND	D024/25	200	87		<<20	<<<<<20	80	140	
Hexachlorobenzene	104	ND	D032	0.13	<20		<<20	<<<<<20	<20	<20	
Hexachlorobutadiene	104	ND	D033	0.5	<20		<<20	<<<<<20	<20	<20	
Hexachloroethane	104	ND	D034	3	<20		<<20	<<<<<20	<20	<20	
Nitrobenzene	104	ND	D036	2	<20		<<20	<<<<<20	<20	<20	
Pentachlorophenol	104	ND	D037	100	<600		<<600	<<<<<600	<600	<600	
Pyridine	104	ND	D038	5	<20		<<20	<<<<<20	<20	<20	
METALS											
Arsenic	104	ND	D004	5	<0.5		<<0.5	<<<<<0.5	<0.5	<0.5	
Barium	104	0.735	D005	100	<10		<<10	<<<<<10	<10	<10	
Cadmium	104	1.52	D006	1	**28.7**		**82.1**	<<<<<0.25	**4.9**	**302**	
Chromium	104	ND	D007	5	0.72		4.4	<<<<<0.25	1.1	**31.2**	
Lead	104	7.1	D008	5	**162**		**12**	0.24	5	**299**	
Mercury	104	ND	D009	0.2	0.035		0.0074	<<<<<0.002	0.058	0.022	
Selenium	104	ND	D010	1	0.83		0.67	<<<<<0.25	0.91	**1.1**	
Silver	104	ND	D011	5	<0.25		**6.7**	<<<<<0.25	<0.25	<0.25	
Misc											
Flash Point	104	164	D001	140	**138**		144	144	146	144	
pH	107	9.83	D002	2-12.5	10.2		10	11.1	10.9	9.8	
VOA											
1,1-Dichloroethylene	104	ND	D029	0.7		<5	<<0.5	<<<<<0.5	<0.5		<5
1,2-Dichloroethane	104	ND	D028	0.5		<5	<<0.5	<<<<<0.5	<0.5		<5
1,4-Dichlorobenzene	104	140	D027	7.5		**160**	**58**	<<<<<2	**59**		**140**
Benzene	104	ND	D018	0.5		**86**	<<0.5	<<<<<0.5	<0.5		**5.2**
Carbon Tetrachloride	104	ND	D019	0.5		<5	<<0.5	<<<<<0.5	<0.5		<5
Chlorobenzene	104	7.3	D021	100		<5	2.2	<<<<<0.5	1.6		<5
Chloroform	104	ND	D022	6		<20	<<2	<<<<<2	<2		<20
Methyl Ethyl Ketone	104	ND	D035	200		<20	<<2	<<<<<2	<2		34
Tetrachloroethylene	104	215	D039	0.7		**400**	**48**	<<<<<0.5	**76**		**200**
Trichloroethylene	104	9.1	D040	0.5		**100**	**2.2**	<<<<<0.5	**3**		**30**
Vinyl Chloride	104	ND	D043	0.2		<2	<<0.2	<<<<<0.2	<0.2		<2

Immersion Cleaner

Analysis	Number of Samples	90 UCL for the 50th Percentile	Waste Code	Reg Limit	Omaha,NE	Omaha,NE
				Sample Number	C2K220125001	C2K220125001R2
				Year	2002	2002
BNA						
2,4,5-Trichlorophenol	104	ND	D041	400	<<20	
2,4,6-Trichlorophenol	104	ND	D042	2	<<20	
2,4-Dinitrotoluene	104	ND	D030	0.13	<<20	
2-Methylphenol	104	ND	D023	200	<<20	
3+4-Methylphenol	104	ND	D024/25	200	<<20	
Hexachlorobenzene	104	ND	D032	0.13	<<20	
Hexachlorobutadiene	104	ND	D033	0.5	<<20	
Hexachloroethane	104	ND	D034	3	<<20	
Nitrobenzene	104	ND	D036	2	<<20	
Pentachlorophenol	104	ND	D037	100	<<600	
Pyridine	104	ND	D038	5	<<20	
METALS						
Arsenic	104	ND	D004	5	<<0.5	
Barium	104	0.735	D005	100	<<10	
Cadmium	104	1.52	D006	1	**4.4**	
Chromium	104	ND	D007	5	0.38	
Lead	104	7.1	D008	5	**11.7**	
Mercury	104	ND	D009	0.2	0.0049	
Selenium	104	ND	D010	1	0.97	
Silver	104	ND	D011	5	<<0.25	
Misc						
Flash Point	104	164	D001	140	141	
pH	107	9.83	D002	2-12.5	10.4	
VOA						
1,1-Dichloroethylene	104	ND	D029	0.7		<<5
1,2-Dichloroethane	104	ND	D028	0.5		<<5
1,4-Dichlorobenzene	104	140	D027	7.5		**170**
Benzene	104	ND	D018	0.5		<<5
Carbon Tetrachloride	104	ND	D019	0.5		<<5
Chlorobenzene	104	7.3	D021	100		6.2
Chloroform	104	ND	D022	6		<<20
Methyl Ethyl Ketone	104	ND	D035	200		<<20
Tetrachloroethylene	104	215	D039	0.7		**300**
Trichloroethylene	104	9.1	D040	0.5		**9.2**
Vinyl Chloride	104	ND	D043	0.2		<<2

Paint Gun Cleaner

				Sample Number	2008505	2015440	2015464	2017365	2017366	2029632	2039385
				Year	2000	2000	2000	2000	2000	2000	2000
Analysis	Number of Samples	90 UCL for the 50th Percentile	Waste Code	Reg Limit	Denton,TX	Albuquerque,NM	Omaha,NE	Edwardsville,KS	Edwardsville,KS	Salt Lake City,UT	Pineville,LA
BNA											
2,4,5-Trichlorophenol	67	ND	D041	400	<200	<200	<200	<200	<12.47	<200	<200
2,4,6-Trichlorophenol	67	ND	D042	2	<200	<200	<200	<200	<12.47	<200	<200
2,4-Dinitrotoluene	67	ND	D030	0.13	<110	<40	<40	<40	<2.494	<40	<40
2-Methylphenol	67	ND	D023	200	<200	<200	<200	<200	<12.47	<200	<200
3+4-Methylphenol	67	ND	D024/25	200	<200	<200	<200	<200	<12.47	<200	<200
Hexachlorobenzene	67	ND	D032	0.13	<170	<40	<40	<40	<2.494	<40	<40
Hexachlorobutadiene	67	ND	D033	0.5	<200	<200	<200	<200	<12.47	<200	<200
Hexachloroethane	67	ND	D034	3	<200	<200	<200	<200	<12.47	<200	<200
Nitrobenzene	67	ND	D036	2	<200	<200	<200	<200	<12.47	<200	<200
Pentachlorophenol	67	ND	D037	100	<200	<200	<200	<200	<12.47	<200	<200
Pyridine	67	ND	D038	5	<210	<200	<210	<210	<13.3429	<210	<210
METALS											
Arsenic	67	ND	D004	5	<5.00	<5.00	<5.00	<5.00	<0.77	<5.00	<5.00
Barium	67	3.8	D005	100	0.594	4.44	3.29	0.904	3.111	<0.500	8.64
Cadmium	67	ND	D006	1	<0.500	<0.500	<0.500	<0.500	<0.077	<0.500	<0.500
Chromium	67	ND	D007	5	<0.500	<0.500	<0.500	<0.500	3.972	3.85	**5.73**
Lead	67	ND	D008	5	<4.00	<4.00	<4.00	<4.00	**15.964**	<4.00	**16.9**
Mercury	67	ND	D009	0.2	<0.10	<0.10	<0.040	<0.10	<0.003152	<0.10	<0.10
Selenium	67	ND	D010	1	<0.45	<0.45	<0.008	<0.45	<0.70545	<0.45	<0.45
Silver	67	ND	D011	5	<0.500	<0.500	<0.500	<0.500	<0.077	<0.500	<0.500
Misc											
Flash Point	66	69	D001	140	<70	**69**	**69**	**69**	**69**	**69**	**69**
pH	70	6	D002	2-12.5	4.33	7.3	4.7	5.2	4.1	4.13	6.75
VOA											
1,1-Dichloroethylene	68	ND	D029	0.7	<40	<40	<4.0	<4.0	<2.588	<4.0	<4.0
1,2-Dichloroethane	68	ND	D028	0.5	<20	<20	<2.0	<2.0	<1.388	<2.0	<2.0
1,4-Dichlorobenzene	68	ND	D027	7.5	<50	<50	<5.0	<5.0	<3.188	<5.0	<5.0
Benzene	68	65.21	D018	0.5	**145**	**102**	**75**	**44.3**	**1.952**	**40.1**	**94.1**
Carbon Tetrachloride	68	ND	D019	0.5	<20	<20	<2.0	<2.0	<1.388	<2.0	<2.0
Chlorobenzene	68	ND	D021	100	<20	<20	<2.0	<2.0	<1.388	<2.0	<2.0
Chloroform	68	4.4	D022	6	<20	<20	<2.0	<2.0	<1.388	<2.0	<2.0
Methyl Ethyl Ketone	68	58000	D035	200	**48400**	**104000**	**22700**	**25500**	**1722.87**	**1190**	**31700**
Tetrachloroethylene	68	102	D039	0.7	**30**	**99.5**	**102**	**44.6**	**3.998**	<2.0	**179**
Trichloroethylene	68	133	D040	0.5	**27.9**	**91.8**	**113**	**39.1**	**3.986**	<2.0	**84.7**
Vinyl Chloride	68	ND	D043	0.2	<15	<15	<1.5	<1.5	<1.0316	<1.5	<1.5

Paint Gun Cleaner

Analysis	Number of Samples	90 UCL for the 50th Percentile	Waste Code	Reg Limit	Sioux Falls,SD	St_ Charles,MO	Columbus,GA	Norcross,GA	Greer,SC	Boynton Beach,FL	Salt Lake City,UT
				Sample Number	2042572	2045080	2050723	2050732	2053037	2057493	2058617
				Year	2000	2000	2000	2000	2000	2000	2000
BNA											
2,4,5-Trichlorophenol	67	ND	D041	400	<200	<200	<200	<200	<200	<200	<0.50
2,4,6-Trichlorophenol	67	ND	D042	2	<200	<200	<200	<200	<200	<200	<0.50
2,4-Dinitrotoluene	67	ND	D030	0.13	<40	<40	<40	<40	<40	<40	<0.10
2-Methylphenol	67	ND	D023	200	<200	<200	<200	<200	<200	<200	<50
3+4-Methylphenol	67	ND	D024/25	200	<200	<200	<200	<200	<200	<200	<50
Hexachlorobenzene	67	ND	D032	0.13	<40	<40	<40	<40	<40	<40	<0.10
Hexachlorobutadiene	67	ND	D033	0.5	<200	<200	<200	<200	<200	<200	<0.50
Hexachloroethane	67	ND	D034	3	<200	<200	<200	<200	<200	<200	<0.50
Nitrobenzene	67	ND	D036	2	<200	<200	<200	<200	<200	<200	<0.50
Pentachlorophenol	67	ND	D037	100	<200	<200	<200	<200	<200	<200	<0.50
Pyridine	67	ND	D038	5	<210	<210	<210	<210	<210	<210	<0.54
METALS											
Arsenic	67	ND	D004	5	<5.00	<5.00	<5.00	<5.00	<5.00	<5.00	<0.500
Barium	67	3.8	D005	100	2.36	3.8	1.12	<0.500	24.8	<0.500	4.25
Cadmium	67	ND	D006	1	<0.500	<0.500	<0.500	<0.500	<0.500	<0.500	<0.050
Chromium	67	ND	D007	5	0.603	<0.500	<0.500	<0.500	<0.500	<0.500	<0.050
Lead	67	ND	D008	5	<4.00	<4.00	<4.00	<4.00	<4.00	<4.00	<0.400
Mercury	67	ND	D009	0.2	<0.10	<0.10	0.1	<0.10	<0.10	<0.10	<0.0008
Selenium	67	ND	D010	1	<0.45	<0.008	<0.45	<0.45	<0.45	<0.45	<0.750
Silver	67	ND	D011	5	<0.500	<0.500	<0.500	<0.500	<0.500	<0.500	<0.050
Misc											
Flash Point	66	69	D001	140	**69**	**69**	**69**	**69**	**69**	**69**	**69**
pH	70	6	D002	2-12.5	4.58	5.28	7.51	4.6	7.23	4.56	6.34
VOA											
1,1-Dichloroethylene	68	ND	D029	0.7	<4.0	<4.0	<80	<8.0	<8.0	<4.0	<0.20
1,2-Dichloroethane	68	ND	D028	0.5	<2.0	<2.0	<40	<8.0	<4.0	<2.0	<0.20
1,4-Dichlorobenzene	68	ND	D027	7.5	<5.0	<5.0	<100	<8.0	<10.0	<5.0	<0.20
Benzene	68	65.21	D018	0.5	**57.4**	**53.4**	<40	**65.21**	**65.8**	**43.1**	<0.20
Carbon Tetrachloride	68	ND	D019	0.5	<2.0	<2.0	<40	<8.0	<4.0	<2.0	<0.20
Chlorobenzene	68	ND	D021	100	<2.0	<2.0	<40	<8.0	<4.0	<2.0	<0.20
Chloroform	68	4.4	D022	6	<2.0	<2.0	<40	<8.0	<4.0	<2.0	<0.20
Methyl Ethyl Ketone	68	58000	D035	200	**32900**	**32300**	**3180**	**42290**	**7460**	**22700**	**958.6**
Tetrachloroethylene	68	102	D039	0.7	**72.6**	**45.3**	<40	**56.87**	<4.0	**46.2**	<0.20
Trichloroethylene	68	133	D040	0.5	**84.8**	**62.5**	<40	**89.58**	<4.0	**192**	<0.20
Vinyl Chloride	68	ND	D043	0.2	<1.5	<1.5	<30	<5.6	<3.0	<1.5	<0.14

Paint Gun Cleaner

				Sample Number	2067116	2067117	2075103	2075108	2078179	2080699	2082225	2082488
				Year	2000	2000	2001	2001	2001	2001	2001	2001
Analysis	Number of Samples	90 UCL for the 50th Percentile	Waste Code	Reg Limit	Salida,CA	Rohnert Park,CA	Denton,TX	Denton,TX	Omaha,NE	Sioux Falls,SD	Albuquerque,NM	Grand Island,NE
BNA												
2,4,5-Trichlorophenol	67	ND	D041	400	<200	<200	<200	<200	<200	<300	<200	<300
2,4,6-Trichlorophenol	67	ND	D042	2	<200	<200	<200	<200	<200	<300	<200	<300
2,4-Dinitrotoluene	67	ND	D030	0.13	<40	<40	<40	<40	<40	<40	<40	<40
2-Methylphenol	67	ND	D023	200	<200	<200	<200	<200	<200	<400	<200	<400
3+4-Methylphenol	67	ND	D024/25	200	<200	<200	<200	<200	<200	<500	<200	<500
Hexachlorobenzene	67	ND	D032	0.13	<40	<40	<40	<40	<40	<40	<40	<40
Hexachlorobutadiene	67	ND	D033	0.5	<200	<200	<200	<200	<200	<100	<200	<100
Hexachloroethane	67	ND	D034	3	<200	<200	<200	<200	<200	<200	<200	<200
Nitrobenzene	67	ND	D036	2	<200	<200	<200	<200	<200	<200	<200	<200
Pentachlorophenol	67	ND	D037	100	<200	<200	<200	<200	<200	<520	<200	<520
Pyridine	67	ND	D038	5	<210	<210	<210	<210	<210	<580	<210	<580
METALS												
Arsenic	67	ND	D004	5	<5.00	<5.00	<5.00	<5.00	<5.00	<5.00	<5.00	<5.00
Barium	67	3.8	D005	100	0.522	0.991	4.47	<0.500	1.42	1.91	0.589	10.3
Cadmium	67	ND	D006	1	<0.500	<0.500	<0.500	<0.500	<0.500	<0.500	<0.500	<0.500
Chromium	67	ND	D007	5	<0.500	<0.500	<0.500	<0.500	<0.500	<0.500	<0.500	0.994
Lead	67	ND	D008	5	<4.00	<4.00	<4.00	<4.00	<4.00	<4.00	<4.00	<4.00
Mercury	67	ND	D009	0.2	<0.10	<0.10	<0.10	<0.100	<0.10	<0.10	<0.10	<0.10
Selenium	67	ND	D010	1	<0.45	<0.45	<0.45	<0.45	<0.45	<0.45	<0.45	<0.45
Silver	67	ND	D011	5	<0.500	<0.500	<0.500	<0.500	<0.500	<0.500	<0.500	<0.500
Misc												
Flash Point	66	69	D001	140	**69**	**69**	**69**	**69**	**69**	**69**	**69**	**69**
pH	70	6	D002	2-12.5	5.61	4.33	7.14	4.64	4.55	4.66	5.80	6.72
VOA												
1,1-Dichloroethylene	68	ND	D029	0.7	<400	<40	<2.0	<4.0	<2.0	<1.6	<16	<4.0
1,2-Dichloroethane	68	ND	D028	0.5	<200	<20	<1.0	<2.0	<1.0	<0.80	<8.0	<2.0
1,4-Dichlorobenzene	68	ND	D027	7.5	<500	<50	<2.5	<5.0	<2.5	<2.0	<20	<5.0
Benzene	68	65.21	D018	0.5	**247**	**166**	**33.2**	**79.1**	**42.6**	**40**	**112**	**25.1**
Carbon Tetrachloride	68	ND	D019	0.5	<200	<20	<1.0	<2.0	<1.0	**3.1**	<8.0	<2.0
Chlorobenzene	68	ND	D021	100	<200	<20	<1.0	<2.0	<1.0	<0.80	<8.0	<2.0
Chloroform	68	4.4	D022	6	<200	<20	<1.0	<2.0	<1.0	<0.80	<8.0	<2.0
Methyl Ethyl Ketone	68	58000	D035	200	**92000**	**77700**	**6000**	**10700**	**7910**	**9560**	**53600**	**18400**
Tetrachloroethylene	68	102	D039	0.7	<200	**86.1**	**1.7**	**92.4**	**46.2**	**480**	**61.8**	**38**
Trichloroethylene	68	133	D040	0.5	<200	**51.8**	<1.0	**59.8**	**125**	**310**	**19.2**	**57.6**
Vinyl Chloride	68	ND	D043	0.2	<150	<15	<0.75	<1.5	<0.75	<0.60	<6.0	<1.5

Paint Gun Cleaner

				Sample Number	2082511	2083131	2085307	2085310	2085318	2088252	2088255
				Year	2001	2001	2001	2001	2001	2001	2001
Analysis	Number of Samples	90 UCL for the 50th Percentile	Waste Code	Reg Limit	Grand Island,NE	Salt Lake City,UT	Lackawanna,NY	Lackawanna,NY	Lackawanna,NY	Columbus,GA	Highland,CA
BNA											
2,4,5-Trichlorophenol	67	ND	D041	400	<300	<300	<300	<300	<300	<300	<300
2,4,6-Trichlorophenol	67	ND	D042	2	<300	<300	<300	<300	<300	<300	<300
2,4-Dinitrotoluene	67	ND	D030	0.13	<40	<40	<40	<40	<40	<40	<40
2-Methylphenol	67	ND	D023	200	<400	<400	<400	<400	<400	<400	<400
3+4-Methylphenol	67	ND	D024/25	200	<500	<500	<500	<500	<500	<500	<500
Hexachlorobenzene	67	ND	D032	0.13	<40	<40	<40	<40	<40	<40	<40
Hexachlorobutadiene	67	ND	D033	0.5	<100	<200	<200	<200	<200	<200	<200
Hexachloroethane	67	ND	D034	3	<200	<200	<200	<200	<200	<200	<200
Nitrobenzene	67	ND	D036	2	<200	<200	<200	<200	<200	<200	<200
Pentachlorophenol	67	ND	D037	100	<520	<520	<520	<520	<520	<520	<520
Pyridine	67	ND	D038	5	<580	<580	<580	<580	<580	<580	<580
METALS											
Arsenic	67	ND	D004	5	<5.00	<5.00	<5.00	<5.00	<5.00	<5.00	<5.00
Barium	67	3.8	D005	100	1.88	<0.500	1.77	0.688	<0.500	<0.500	<0.500
Cadmium	67	ND	D006	1	<0.500	0.528	<0.500	<0.500	<0.500	<0.500	<0.500
Chromium	67	ND	D007	5	<0.500	0.501	3.99	1.22	<0.500	<0.500	<0.500
Lead	67	ND	D008	5	<4.00	<4.00	**15.7**	4.73	<4.00	<4.00	<4.00
Mercury	67	ND	D009	0.2	<0.10	<0.10	<0.10	<0.10	<0.10	<0.10	<0.10
Selenium	67	ND	D010	1	<0.45	<0.45	<0.45	<0.45	<0.45	<0.45	<0.45
Silver	67	ND	D011	5	<0.500	<0.500	<0.500	<0.500	<0.500	<0.500	<0.500
Misc											
Flash Point	66	69	D001	140	**69**	**69**	**69**	**69**	**69**	**69**	**69**
pH	70	6	D002	2-12.5	4.75	6.05	5.92	4.63	6.78	5.23	5.11
VOA											
1,1-Dichloroethylene	68	ND	D029	0.7	<4.0	<1.6	<2.0	<2.0	<1.6	<4.0	<4.0
1,2-Dichloroethane	68	ND	D028	0.5	<2.0	<0.80	<1.0	<1.0	<0.80	<2.0	<2.0
1,4-Dichlorobenzene	68	ND	D027	7.5	<5.0	<2.0	<2.5	<2.5	<2.0	<5.0	<5.0
Benzene	68	65.21	D018	0.5	**41.2**	**52.4**	**22.2**	**32.8**	**26.8**	**35.5**	**44**
Carbon Tetrachloride	68	ND	D019	0.5	<2.0	<0.80	<1.0	<1.0	<0.80	<2.0	<2.0
Chlorobenzene	68	ND	D021	100	<2.0	<0.80	<1.0	<1.0	<0.80	<2.0	<2.0
Chloroform	68	4.4	D022	6	<2.0	3.8	<1.0	<1.0	<0.80	4.6	4.4
Methyl Ethyl Ketone	68	58000	D035	200	**16500**	**9720**	**9440**	**11200**	**8460**	**116000**	**78100**
Tetrachloroethylene	68	102	D039	0.7	**75.4**	**113**	**40**	**55.3**	**96.7**	**109**	**16.6**
Trichloroethylene	68	133	D040	0.5	**142**	**108**	**70.9**	**95.8**	**155**	**262**	**39**
Vinyl Chloride	68	ND	D043	0.2	<1.5	<0.60	<0.75	<0.75	<0.60	<1.5	<1.5

Paint Gun Cleaner

				Sample Number	2088695	2090896	2091677	2093901	2094178	2094887	2095110	2095112
				Year	2001	2001	2001	2001	2001	2001	2001	2001
Analysis	Number of Samples	90 UCL for the 50th Percentile	Waste Code	Reg Limit	Wichita,KS	Oklahoma City,OK	Tulsa,OK	Pineville,LA	Oakland,CA	Boynton Beach,FL	Norcross,GA	Norcross,GA
BNA												
2,4,5-Trichlorophenol	67	ND	D041	400	<300	<300	<300	<300	<300	<300	<300	<300
2,4,6-Trichlorophenol	67	ND	D042	2	<300	<300	<300	<300	<300	<300	<300	<300
2,4-Dinitrotoluene	67	ND	D030	0.13	<40	<40	<40	<40	<40	<40	<40	<40
2-Methylphenol	67	ND	D023	200	<400	<400	<400	<400	<400	<400	<400	<400
3+4-Methylphenol	67	ND	D024/25	200	<500	<500	<500	<400	<400	<400	<400	<400
Hexachlorobenzene	67	ND	D032	0.13	<40	<40	<40	<40	<40	<40	<40	<40
Hexachlorobutadiene	67	ND	D033	0.5	<100	<200	<200	<200	<200	<200	<200	<200
Hexachloroethane	67	ND	D034	3	<200	<200	<200	<200	<200	<200	<200	<200
Nitrobenzene	67	ND	D036	2	<200	<200	<200	<200	<200	<200	<200	<200
Pentachlorophenol	67	ND	D037	100	<520	<520	<520	<520	<520	<520	<520	<520
Pyridine	67	ND	D038	5	<580	<580	<580	<500	<500	<500	<500	<500
METALS												
Arsenic	67	ND	D004	5	<5.00	<5.00	<5.00	<5.00	<5.00	<5.00	<5.00	<5.00
Barium	67	3.8	D005	100	3.41	<0.500	<0.500	1.25	9.92	<0.500	<0.500	51.8
Cadmium	67	ND	D006	1	<0.500	<0.500	<0.500	<0.500	<0.500	<0.500	<0.500	<0.500
Chromium	67	ND	D007	5	<0.500	**5.35**	<0.500	<0.500	**5.80**	<0.500	<0.500	<0.500
Lead	67	ND	D008	5	<4.00	<4.00	<4.00	<4.00	**34.8**	<4.00	<4.00	<4.00
Mercury	67	ND	D009	0.2	<0.10	<0.10	<0.10	<0.10	<0.100	<0.100	<0.10	<0.10
Selenium	67	ND	D010	1	<0.45	<0.45	<0.45	<0.45	<0.45	<0.45	<0.45	<0.45
Silver	67	ND	D011	5	<0.500	<0.500	<0.500	<0.500	<0.500	<0.500	<0.500	<0.500
Misc												
Flash Point	66	69	D001	140	**69**	**69**	**69**	**69**	**69**	**69**	**69**	**69**
pH	70	6	D002	2-12.5	6.69	4.45	6.96	4.89	6.64	5.99	4.67	5.01
VOA												
1,1-Dichloroethylene	68	ND	D029	0.7	<4.0	<4.0	<4.0	<40	<40	<4.0	<1.6	<1.6
1,2-Dichloroethane	68	ND	D028	0.5	<2.0	<2.0	<2.0	<20	<20	<2.0	<0.80	<0.80
1,4-Dichlorobenzene	68	ND	D027	7.5	<5.0	<5.0	<5.0	<50	<50	<5.0	<2.0	<2.0
Benzene	68	65.21	D018	0.5	**104**	**95.5**	**79.8**	**951**	**40.2**	**34.3**	**39.1**	**46.2**
Carbon Tetrachloride	68	ND	D019	0.5	<2.0	<2.0	<2.0	<20	<20	<2.0	<0.80	<0.80
Chlorobenzene	68	ND	D021	100	<2.0	<2.0	<2.0	<20	<20	<2.0	<0.80	<0.80
Chloroform	68	4.4	D022	6	<2.0	<2.0	<2.0	<20	<20	<2.0	5.8	<0.80
Methyl Ethyl Ketone	68	58000	D035	200	**137000**	**127000**	<5.0	**1360000**	**233000**	**174000**	**90400**	**73100**
Tetrachloroethylene	68	102	D039	0.7	**266**	**182**	**51.2**	**36500**	**32.6**	**104**	**288**	**141**
Trichloroethylene	68	133	D040	0.5	**59.1**	**62.7**	**17.1**	**441**	<20	**136**	**220**	**170**
Vinyl Chloride	68	ND	D043	0.2	<1.5	<1.5	<1.5	<15	<15	<1.5	<0.60	<0.60

Paint Gun Cleaner

				Sample Number	2097345	2097349	2098611	2118943	2123650	2126776	2134284	2138254	2138805
				Year	2001	2001	2001	2001	2001	2001	2002	2002	2002
Analysis	Number of Samples	90 UCL for the 50th Percentile	Waste Code	Reg Limit	Avon,NY	Avon,NY	Greer,SC	Salt Lake City,UT	Oakland,CA	Salida,CA	Denton,TX	Greer,SC	Tallahassee,FL
BNA													
2,4,5-Trichlorophenol	67	ND	D041	400	<300	<300	<300	<300	<300	<300	<300	<300	<300
2,4,6-Trichlorophenol	67	ND	D042	2	<300	<300	<300	<300	<300	<300	<300	<300	<300
2,4-Dinitrotoluene	67	ND	D030	0.13	<40	<40	<40	<40	<40	<40	<40	<40	<40
2-Methylphenol	67	ND	D023	200	<400	<400	<400	<400	<400	<400	<400	<400	<400
3+4-Methylphenol	67	ND	D024/25	200	<400	<400	<400	<400	<400	<400	<400	<400	<400
Hexachlorobenzene	67	ND	D032	0.13	<40	<40	<40	<40	<40	<40	<40	<40	<40
Hexachlorobutadiene	67	ND	D033	0.5	<200	<200	<200	<200	<200	<200	<100	<200	<200
Hexachloroethane	67	ND	D034	3	<200	<200	<200	<200	<200	<200	<200	<200	<200
Nitrobenzene	67	ND	D036	2	<200	<200	<200	<200	<200	<200	<200	<200	<200
Pentachlorophenol	67	ND	D037	100	<520	<520	<520	<520	<520	<520	<520	<520	<520
Pyridine	67	ND	D038	5	<500	<500	<500	<500	<500	<500	<500	<500	<500
METALS													
Arsenic	67	ND	D004	5	<5.00	<5.00	<5.00	<5.00	<5.00	<5.00	<5.00	<5.00	<5.00
Barium	67	3.8	D005	100	<0.500	1.38	<0.500	2.04	31.7	0.551	<5.00	<5.00	<5.00
Cadmium	67	ND	D006	1	<0.500	<0.500	<0.500	<0.500	<0.500	<0.500	<0.500	<0.500	<0.500
Chromium	67	ND	D007	5	<0.500	**14.4**	<0.500	**9.33**	0.601	<0.500	1.95	<0.500	<0.500
Lead	67	ND	D008	5	<4.00	**98.4**	<4.00	**27.3**	<4.00	<4.00	**13.1**	<4.00	<4.00
Mercury	67	ND	D009	0.2	<0.10	<0.10	<0.10	<0.100	<0.10	<0.10	0.063	<0.040	<0.040
Selenium	67	ND	D010	1	<0.45	<0.45	<0.45	<0.45	<0.45	<0.45	<0.45	<0.45	<0.45
Silver	67	ND	D011	5	<0.500	<0.500	<0.500	<0.500	<0.500	<0.500	<0.500	<0.500	<0.500
Misc													
Flash Point	66	69	D001	140	**69**	**69**	<70	<70	**69**	**69**	**69**	**69**	
pH	70	6	D002	2-12.5	5.64	7.03	4.41	5.98	5.18	6.67	4.71	4.73	4.29
VOA													
1,1-Dichloroethylene	68	ND	D029	0.7	<0.80	<4.0	<4.0	<4.0	<4.0	<2.0	<0.40	<4.0	<40
1,2-Dichloroethane	68	ND	D028	0.5	<0.40	<2.0	<2.0	<2.0	<2.0	<1.0	<0.20	<2.0	<20
1,4-Dichlorobenzene	68	ND	D027	7.5	<1.0	<5.0	<5.0	<5.0	<5.0	<2.5	<0.50	<5.0	<50
Benzene	68	65.21	D018	0.5	**53.3**	**13.6**	**61**	**11.4**	**51.8**	**32.7**	**69**	**58**	**46.4**
Carbon Tetrachloride	68	ND	D019	0.5	<0.40	<2.0	**5.2**	<2.0	<2.0	<1.0	<0.20	<2.0	<20
Chlorobenzene	68	ND	D021	100	<0.40	<2.0	<2.0	<2.0	<2.0	<1.0	<0.20	<2.0	<20
Chloroform	68	4.4	D022	6	<0.40	<2.0	**48.3**	<2.0	<2.0	<1.0	<0.20	<2.0	<20
Methyl Ethyl Ketone	68	58000	D035	200	**95500**	**58000**	**167000**	**10800**	**15500**	**16800**	**8000**	**39300**	**93300**
Tetrachloroethylene	68	102	D039	0.7	**78.1**	**11.2**	**194**	**9.5**	**20.1**	<1.0	**52.7**	**86.6**	**114**
Trichloroethylene	68	133	D040	0.5	**325**	<2.0	**305**	<2.0	**3.6**	<1.0	**16.2**	**178**	**127**
Vinyl Chloride	68	ND	D043	0.2	<0.30	<1.5	<1.5	<1.5	<1.5	<0.75	<0.15	<1.5	<15

Paint Gun Cleaner

				Sample Number	2139363	2139812	2140379	2141018	C2F210337001	C2F210337001X	C2G090269001
				Year	2002	2002	2002	2002	2002	2002	2002
Analysis	Number of Samples	90 UCL for the 50th Percentile	Waste Code	Reg Limit	Boynton Beach,FL	Salt Lake City,UT	Columbus,GA	Norcross,GA	Pineville,LA	Pineville,LA	Albuquerque,NM
BNA											
2,4,5-Trichlorophenol	67	ND	D041	400	<300	<300	<300	<300	<<<<<<20		<<<<<<20
2,4,6-Trichlorophenol	67	ND	D042	2	<300	<300	<300	<300	<<<<<<20		<<<<<<20
2,4-Dinitrotoluene	67	ND	D030	0.13	<40	<40	<40	<40	<<<<<<20		<<<<<<20
2-Methylphenol	67	ND	D023	200	<400	<400	<400	<400	**370**		<<<<<<20
3+4-Methylphenol	67	ND	D024/25	200	<400	<400	<400	<400	180		<<<<<<20
Hexachlorobenzene	67	ND	D032	0.13	<40	<40	<40	<40	<<<<<<20		<<<<<<20
Hexachlorobutadiene	67	ND	D033	0.5	<200	<100	<100	<200	<<<<<<20		<<<<<<20
Hexachloroethane	67	ND	D034	3	<200	<200	<200	<200	<<<<<<20		<<<<<<20
Nitrobenzene	67	ND	D036	2	<200	<200	<200	<200	<<<<<<20		<<<<<<20
Pentachlorophenol	67	ND	D037	100	<520	<520	<520	<520	<<<<<<1200		<<<<<<600
Pyridine	67	ND	D038	5	<500	<500	<500	<500	<<<<<<20		<<<<<<20
METALS											
Arsenic	67	ND	D004	5	<5.00	<5.00	<5.00	<5.00	<<<<<<1		<<<<<<1
Barium	67	3.8	D005	100	<5.00	11.7	<5.00	<5.00	<<<<<<20		<<<<<<20
Cadmium	67	ND	D006	1	<0.500	<0.500	<0.500	<0.500	<<<<<<0.5		<<<<<<0.5
Chromium	67	ND	D007	5	<0.500	3.52	<0.500	<0.500	<<<<<<0.5		<<<<<<0.5
Lead	67	ND	D008	5	<4.00	<4.00	<4.00	<4.00	0.51		<<<<<<0.3
Mercury	67	ND	D009	0.2	<0.1	<0.10	<0.040	<0.040	<<<<<<0.033		<<<<<<0.033
Selenium	67	ND	D010	1	<0.45	<0.45	<0.45	<0.45	<<<<<<0.5		<<<<<<0.5
Silver	67	ND	D011	5	<0.500	<0.500	<0.500	<0.500	<<<<<<0.5		<<<<<<0.5
Misc											
Flash Point	66	69	D001	140	<70	<70	**69**	<70		**69.6**	
pH	70	6	D002	2-12.5	4.71	4.54	4.92	4.41	10.1		6.2
VOA											
1,1-Dichloroethylene	68	ND	D029	0.7	<40	<0.80	<4.0	<4.0	<<<<<<1000		<<<<<<1000
1,2-Dichloroethane	68	ND	D028	0.5	<20	<0.40	<2.0	<2.0	<<<<<<1000		<<<<<<1000
1,4-Dichlorobenzene	68	ND	D027	7.5	<50	<1.0	<5.0	<5.0	<<<<<<1000		<<<<<<1000
Benzene	68	65.21	D018	0.5	**37.5**	**65.2**	**40.5**	**31.3**	<<<<<<1000		<<<<<<1000
Carbon Tetrachloride	68	ND	D019	0.5	<20	<0.40	<2.0	<2.0	<<<<<<1000		<<<<<<1000
Chlorobenzene	68	ND	D021	100	<20	<0.40	<2.0	<2.0	<<<<<<1000		<<<<<<1000
Chloroform	68	4.4	D022	6	<20	<0.40	<2.0	<2.0	<<<<<<4000		<<<<<<4000
Methyl Ethyl Ketone	68	58000	D035	200	**46300**	**8920**	**12300**	**27800**	**100000**		**79000**
Tetrachloroethylene	68	102	D039	0.7	**96**	**10.6**	**57.5**	**135**	<<<<<<1000		<<<<<<1000
Trichloroethylene	68	133	D040	0.5	**95.1**	**3.9**	**133**	**122**	<<<<<<1000		<<<<<<1000
Vinyl Chloride	68	ND	D043	0.2	<15	<0.30	<1.5	<1.5	<<<<<<400		<<<<<<400

Paint Gun Cleaner

				Sample Number	C2G090269001X	C2I250313001	C2I250313001R2	C2J010108001	C2J010108001R2	C2J010108001X	C2J010117001
				Year	2002	2002	2002	2002	2002	2002	2002
Analysis	Number of Samples	90 UCL for the 50th Percentile	Waste Code	Reg Limit	Albuquerque,NM	Boise,ID	Boise,ID	Tampa,FL	Tampa,FL	Tampa,FL	Clackamas,OR
BNA											
2,4,5-Trichlorophenol	67	ND	D041	400		45		50			49
2,4,6-Trichlorophenol	67	ND	D042	2		<<<<<<20		<<<<<<20			<<<<<<20
2,4-Dinitrotoluene	67	ND	D030	0.13		<<<<<<20		<<<<<<20			<<<<<<20
2-Methylphenol	67	ND	D023	200		23		46			48
3+4-Methylphenol	67	ND	D024/25	200		62		63			65
Hexachlorobenzene	67	ND	D032	0.13		<<<<<<20		<<<<<<20			<<<<<<20
Hexachlorobutadiene	67	ND	D033	0.5		<<<<<<20		<<<<<<20			<<<<<<20
Hexachloroethane	67	ND	D034	3		**140**		<<<<<<20			<<<<<<20
Nitrobenzene	67	ND	D036	2		<<<<<<20		<<<<<<20			<<<<<<20
Pentachlorophenol	67	ND	D037	100		<<<<<<600		<<<<<<600			<<<<<<600
Pyridine	67	ND	D038	5		**30**		**28**			**46**
METALS											
Arsenic	67	ND	D004	5		<<<<<<1		<<<<<<1			<<<<<<1
Barium	67	3.8	D005	100		<<<<<<20		<<<<<<20			<<<<<<20
Cadmium	67	ND	D006	1		<<<<<<0.5		<<<<<<0.5			<<<<<<0.5
Chromium	67	ND	D007	5		<<<<<<0.5		<<<<<<0.5			<<<<<<0.5
Lead	67	ND	D008	5		0.32		0.34			0.38
Mercury	67	ND	D009	0.2		<<<<<<0.033		<<<<<<0.033			<<<<<<0.033
Selenium	67	ND	D010	1		0.82		0.57			<<<<<<0.5
Silver	67	ND	D011	5		<<<<<<0.5		<<<<<<0.5			<<<<<<0.5
Misc											
Flash Point	66	69	D001	140	**50.4**	**62.7**				**67.7**	**67.7**
pH	70	6	D002	2-12.5		6.4				6.1	6.9
VOA											
1,1-Dichloroethylene	68	ND	D029	0.7		<<<<<<0.5		<<<<<<0.5			
1,2-Dichloroethane	68	ND	D028	0.5		<<<<<<0.5		<<<<<<0.5			
1,4-Dichlorobenzene	68	ND	D027	7.5		<<<<<<0.5		<<<<<<0.5			
Benzene	68	65.21	D018	0.5		**34**		**62**			
Carbon Tetrachloride	68	ND	D019	0.5		<<<<<<0.5		<<<<<<0.5			
Chlorobenzene	68	ND	D021	100		<<<<<<0.5		1.3			
Chloroform	68	4.4	D022	6		<<<<<<2		<<<<<<2			
Methyl Ethyl Ketone	68	58000	D035	200			**33000**		**130000**		
Tetrachloroethylene	68	102	D039	0.7		**11**		**78**			
Trichloroethylene	68	133	D040	0.5		<<<<<<0.5		**150**			
Vinyl Chloride	68	ND	D043	0.2		<<<<<<0.2		<<<<<<0.2			

Paint Gun Cleaner

				Sample Number	C2J010117001R2	C2J010316001R2	C2J040329001	C2J040329001R2	C2J150274001	C2J150274001R2
				Year	2002	2002	2002	2002	2002	2002
Analysis	Number of Samples	90 UCL for the 50th Percentile	Waste Code	Reg Limit	Clackamas,OR	Gering,NE	Grand Island,NE	Grand Island,NE	Avon,NY	Avon,NY
BNA										
2,4,5-Trichlorophenol	67	ND	D041	400			68		84	
2,4,6-Trichlorophenol	67	ND	D042	2			<<<<<<20		<<<<<<20	
2,4-Dinitrotoluene	67	ND	D030	0.13			<<<<<<20		<<<<<<20	
2-Methylphenol	67	ND	D023	200			40		43	
3+4-Methylphenol	67	ND	D024/25	200			72		90	
Hexachlorobenzene	67	ND	D032	0.13			<<<<<<20		<<<<<<20	
Hexachlorobutadiene	67	ND	D033	0.5			<<<<<<20		<<<<<<20	
Hexachloroethane	67	ND	D034	3			<<<<<<20		<<<<<<20	
Nitrobenzene	67	ND	D036	2			<<<<<<20		<<<<<<20	
Pentachlorophenol	67	ND	D037	100			<<<<<<600		<<<<<<600	
Pyridine	67	ND	D038	5			**30**		**33**	
METALS										
Arsenic	67	ND	D004	5			<<<<<<1		<<<<<<1	
Barium	67	3.8	D005	100			<<<<<<20		**157**	
Cadmium	67	ND	D006	1			<<<<<<0.5		<<<<<<0.5	
Chromium	67	ND	D007	5			0.94		**9.9**	
Lead	67	ND	D008	5			0.97		2.2	
Mercury	67	ND	D009	0.2			<<<<<<0.033		<<<<<<0.033	
Selenium	67	ND	D010	1			<<<<<<0.5		<<<<<<0.5	
Silver	67	ND	D011	5			<<<<<<0.5		<<<<<<0.5	
Misc										
Flash Point	66	69	D001	140			**67.5**		**67.8**	
pH	70	6	D002	2-12.5			5.4		7	
VOA										
1,1-Dichloroethylene	68	ND	D029	0.7	<<<<<<2500	<<<<<<1200	<<<<<<0.5			<<<<<<1000
1,2-Dichloroethane	68	ND	D028	0.5	<<<<<<2500	<<<<<<1200	<<<<<<0.5			<<<<<<1000
1,4-Dichlorobenzene	68	ND	D027	7.5	<<<<<<2500	<<<<<<1200	<<<<<<0.5			<<<<<<1000
Benzene	68	65.21	D018	0.5	<<<<<<2500	<<<<<<1200	**65**			<<<<<<1000
Carbon Tetrachloride	68	ND	D019	0.5	<<<<<<2500	<<<<<<1200	<<<<<<0.5			<<<<<<1000
Chlorobenzene	68	ND	D021	100	<<<<<<2500	<<<<<<1200	<<<<<<0.5			<<<<<<1000
Chloroform	68	4.4	D022	6	<<<<<<10000	<<<<<<5000	**13**			<<<<<<4000
Methyl Ethyl Ketone	68	58000	D035	200	**91000**	**69000**		**92000**		**95000**
Tetrachloroethylene	68	102	D039	0.7	<<<<<<2500	<<<<<<1200		<<<<<<1000		<<<<<<1000
Trichloroethylene	68	133	D040	0.5	<<<<<<2500	<<<<<<1200	**200**			<<<<<<1000
Vinyl Chloride	68	ND	D043	0.2	<<<<<<1000	<<<<<<500	<<<<<<0.2			<<<<<<400

Paint Gun Cleaner

				Sample Number	C2J170169001	C2J170169001R2	C2K010358001	C2K010358001R2	C2K060116001	C2K060116001R2
				Year	2002	2002	2002	2002	2002	2002
Analysis	Number of Samples	90 UCL for the 50th Percentile	Waste Code	Reg Limit	Nepean,ON	Nepean,ON	St_Charles,MO	St_Charles,MO	Salt Lake City,UT	Salt Lake City,UT
BNA										
2,4,5-Trichlorophenol	67	ND	D041	400	75		<<<<<<20		<<<<<<20	
2,4,6-Trichlorophenol	67	ND	D042	2	<<<<<<20		<<<<<<20		<<<<<<20	
2,4-Dinitrotoluene	67	ND	D030	0.13	<<<<<<20		<<<<<<20		<<<<<<20	
2-Methylphenol	67	ND	D023	200	60		<<<<<<20		<<<<<<20	
3+4-Methylphenol	67	ND	D024/25	200	120		<<<<<<20		<<<<<<20	
Hexachlorobenzene	67	ND	D032	0.13	<<<<<<20		<<<<<<20		<<<<<<20	
Hexachlorobutadiene	67	ND	D033	0.5	<<<<<<20		<<<<<<20		<<<<<<20	
Hexachloroethane	67	ND	D034	3	<<<<<<20		<<<<<<20		<<<<<<20	
Nitrobenzene	67	ND	D036	2	<<<<<<20		<<<<<<20		<<<<<<20	
Pentachlorophenol	67	ND	D037	100	<<<<<<600		<<<<<<600		<<<<<<600	
Pyridine	67	ND	D038	5	42		<<<<<<20		<<<<<<20	
METALS										
Arsenic	67	ND	D004	5	<<<<<<1		<<<<<<1		<<<<<<1	
Barium	67	3.8	D005	100	<<<<<<20		<<<<<<20		<<<<<<20	
Cadmium	67	ND	D006	1	<<<<<<0.5		<<<<<<0.5		<<<<<<0.5	
Chromium	67	ND	D007	5	1.5		<<<<<<0.5		<<<<<<0.5	
Lead	67	ND	D008	5	<<<<<<0.3		<<<<<<0.3		0.63	
Mercury	67	ND	D009	0.2	<<<<<<0.033		<<<<<<0.033		<<<<<<0.033	
Selenium	67	ND	D010	1	<<<<<<0.5		<<<<<<0.5		<<<<<<0.5	
Silver	67	ND	D011	5	<<<<<<0.5		<<<<<<0.5		<<<<<<0.5	
Misc										
Flash Point	66	69	D001	140	**67.8**		**67.5**			
pH	70	6	D002	2-12.5	7.7		6		7.6	
VOA										
1,1-Dichloroethylene	68	ND	D029	0.7		<<<<<<1000		<<<<<<1000		<<<<<<1000
1,2-Dichloroethane	68	ND	D028	0.5		<<<<<<1000		<<<<<<1000		<<<<<<1000
1,4-Dichlorobenzene	68	ND	D027	7.5		<<<<<<1000		<<<<<<1000		<<<<<<1000
Benzene	68	65.21	D018	0.5		<<<<<<1000		<<<<<<1000		<<<<<<1000
Carbon Tetrachloride	68	ND	D019	0.5		<<<<<<1000		<<<<<<1000		<<<<<<1000
Chlorobenzene	68	ND	D021	100		<<<<<<1000		<<<<<<1000		<<<<<<1000
Chloroform	68	4.4	D022	6		<<<<<<4000		<<<<<<4000		<<<<<<4000
Methyl Ethyl Ketone	68	58000	D035	200		**41000**		**68000**		**87000**
Tetrachloroethylene	68	102	D039	0.7		<<<<<<1000		<<<<<<1000		<<<<<<1000
Trichloroethylene	68	133	D040	0.5		<<<<<<1000		<<<<<<1000		<<<<<<1000
Vinyl Chloride	68	ND	D043	0.2		<<<<<<400		<<<<<<400		<<<<<<400

Paint Gun Cleaner

				Sample Number	C2K060116001X	C2K080222001	C2K080222001R2	C2K080291001	C2K080291001R2	C2K130350001	C2K130350001R2
				Year	2002	2002	2002	2002	2002	2002	2002
Analysis	**Number of Samples**	**90 UCL for the 50th Percentile**	**Waste Code**	**Reg Limit**	Salt Lake City,UT	Celmsford,ON	Celmsford,ON	Oshawa,ON	Oshawa,ON	Wichita,KS	Wichita,KS
BNA											
2,4,5-Trichlorophenol	67	ND	D041	400		<<<<<<20		<<<<<<20		<<<<<20	
2,4,6-Trichlorophenol	67	ND	D042	2		<<<<<<20		<<<<<<20		<<<<<20	
2,4-Dinitrotoluene	67	ND	D030	0.13		<<<<<<20		<<<<<<20		<<<<<20	
2-Methylphenol	67	ND	D023	200		<<<<<<20		**360**		<<<<<20	
3+4-Methylphenol	67	ND	D024/25	200		<<<<<<20		<<<<<<20		<<<<<20	
Hexachlorobenzene	67	ND	D032	0.13		<<<<<<20		<<<<<<20		<<<<<20	
Hexachlorobutadiene	67	ND	D033	0.5		<<<<<<20		<<<<<<20		<<<<<20	
Hexachloroethane	67	ND	D034	3		<<<<<<20		<<<<<<20		<<<<<20	
Nitrobenzene	67	ND	D036	2		<<<<<<20		<<<<<<20		<<<<<20	
Pentachlorophenol	67	ND	D037	100		<<<<<<600		<<<<<<600		<<<<<600	
Pyridine	67	ND	D038	5		<<<<<<20		<<<<<<20		<<<<<20	
METALS											
Arsenic	67	ND	D004	5		<<<<<<1		<<<<<<1		<<<<<1	
Barium	67	3.8	D005	100		<<<<<<20		<<<<<<20		<<<<<20	
Cadmium	67	ND	D006	1		<<<<<<0.5		<<<<<<0.5		<<<<<0.5	
Chromium	67	ND	D007	5		<<<<<<0.5		<<<<<<0.5		<<<<<0.5	
Lead	67	ND	D008	5		<<<<<<0.3		1.9		<<<<<0.3	
Mercury	67	ND	D009	0.2		<<<<<<0.033		<<<<<<0.033		<<<<<0.033	
Selenium	67	ND	D010	1		<<<<<<0.5		<<<<<<0.5		<<<<<0.5	
Silver	67	ND	D011	5		<<<<<<0.5		<<<<<<0.5		<<<<<0.5	
Misc											
Flash Point	66	69	D001	140	**67.5**	**67.8**		**67.8**		**67.5**	
pH	70	6	D002	2-12.5		8.1		8.8		6.8	
VOA											
1,1-Dichloroethylene	68	ND	D029	0.7			<<<<<<25		<<<<<<1000		<<<<<1200
1,2-Dichloroethane	68	ND	D028	0.5			<<<<<<25		<<<<<<1000		<<<<<1200
1,4-Dichlorobenzene	68	ND	D027	7.5			<<<<<<25		<<<<<<1000		<<<<<1200
Benzene	68	65.21	D018	0.5			<<<<<<25		<<<<<<1000		<<<<<1200
Carbon Tetrachloride	68	ND	D019	0.5			<<<<<<25		<<<<<<1000		<<<<<1200
Chlorobenzene	68	ND	D021	100			<<<<<<25		<<<<<<1000		<<<<<1200
Chloroform	68	4.4	D022	6			<<<<<<100		<<<<<<4000		<<<<<5000
Methyl Ethyl Ketone	68	58000	D035	200			**770**		**19000**		**63000**
Tetrachloroethylene	68	102	D039	0.7			<<<<<<25		<<<<<<1000		<<<<<1200
Trichloroethylene	68	133	D040	0.5			<<<<<<25		<<<<<<1000		<<<<<1200
Vinyl Chloride	68	ND	D043	0.2			<<<<<<10		<<<<<<400		<<<<<500

Paint Gun Cleaner

				Sample Number	C2K140134001	C2K140134001R2	C2K140152001	C2K140152001R2	C2K180218001	C2K180218001R2	C2K220132001
				Year	2002	2002	2002	2002	2002	2002	2002
Analysis	Number of Samples	90 UCL for the 50th Percentile	Waste Code	Reg Limit	Sacramento,CA	Sacramento,CA	Oakland,CA	Oakland,CA	Sacramento,CA	Sacramento,CA	Omaha,NE
BNA											
2,4,5-Trichlorophenol	67	ND	D041	400	<<<<<20		<<<<<20		<<20		<<<20
2,4,6-Trichlorophenol	67	ND	D042	2	<<<<<20		<<<<<20		<<20		<<<20
2,4-Dinitrotoluene	67	ND	D030	0.13	<<<<<20		<<<<<20		<<20		<<<20
2-Methylphenol	67	ND	D023	200	<<<<<20		<<<<<20		<<20		<<<20
3+4-Methylphenol	67	ND	D024/25	200	<<<<<20		<<<<<20		<<20		<<<20
Hexachlorobenzene	67	ND	D032	0.13	<<<<<20		<<<<<20		<<20		<<<20
Hexachlorobutadiene	67	ND	D033	0.5	<<<<<20		<<<<<20		<<20		<<<20
Hexachloroethane	67	ND	D034	3	<<<<<20		<<<<<20		<<20		<<<20
Nitrobenzene	67	ND	D036	2	<<<<<20		<<<<<20		<<20		<<<20
Pentachlorophenol	67	ND	D037	100	<<<<<600		<<<<<600		<<600		<<<600
Pyridine	67	ND	D038	5	**34**		<<<<<20		**93**		<<<20
METALS											
Arsenic	67	ND	D004	5	<<<<<1		<<<<<1		<<1		<<<1
Barium	67	3.8	D005	100	<<<<<20		<<<<<20		<<20		<<<20
Cadmium	67	ND	D006	1	<<<<<0.5		<<<<<0.5		<<0.5		<<<0.5
Chromium	67	ND	D007	5	<<<<<0.5		<<<<<0.5		<<0.5		<<<0.5
Lead	67	ND	D008	5	<<<<<0.3		0.36		<<0.3		0.37
Mercury	67	ND	D009	0.2	<<<<<0.033		<<<<<0.033		<<0.033		<<<0.033
Selenium	67	ND	D010	1	<<<<<0.5		<<<<<0.5		<<0.5		<<<0.5
Silver	67	ND	D011	5	<<<<<0.5		<<<<<0.5		<<0.5		<<<0.5
Misc											
Flash Point	66	69	D001	140	**67.5**		**67.5**		**67.8**		**67.8**
pH	70	6	D002	2-12.5	5.1		6.9		6.9		6.3
VOA											
1,1-Dichloroethylene	68	ND	D029	0.7		<<<<<1000		<<<<<1000		<<1000	
1,2-Dichloroethane	68	ND	D028	0.5		<<<<<1000		<<<<<1000		<<1000	
1,4-Dichlorobenzene	68	ND	D027	7.5		<<<<<4000		<<<<<4000		<<4000	
Benzene	68	65.21	D018	0.5		<<<<<1000		<<<<<1000		<<1000	
Carbon Tetrachloride	68	ND	D019	0.5		<<<<<1000		<<<<<1000		<<1000	
Chlorobenzene	68	ND	D021	100		<<<<<1000		<<<<<1000		<<1000	
Chloroform	68	4.4	D022	6		<<<<<4000		<<<<<4000		<<4000	
Methyl Ethyl Ketone	68	58000	D035	200		**70000**		**55000**		**78000**	
Tetrachloroethylene	68	102	D039	0.7		<<<<<1000		<<<<<1000		<<1000	
Trichloroethylene	68	133	D040	0.5		<<<<<1000		<<<<<1000		<<1000	
Vinyl Chloride	68	ND	D043	0.2		<<<<<400		<<<<<400		<<400	

Paint Gun Cleaner

				Sample Number	C2K220132001R2
				Year	2002
Analysis	Number of Samples	90 UCL for the 50th Percentile	Waste Code	Reg Limit	Omaha,NE
BNA					
2,4,5-Trichlorophenol	67	ND	D041	400	
2,4,6-Trichlorophenol	67	ND	D042	2	
2,4-Dinitrotoluene	67	ND	D030	0.13	
2-Methylphenol	67	ND	D023	200	
3+4-Methylphenol	67	ND	D024/25	200	
Hexachlorobenzene	67	ND	D032	0.13	
Hexachlorobutadiene	67	ND	D033	0.5	
Hexachloroethane	67	ND	D034	3	
Nitrobenzene	67	ND	D036	2	
Pentachlorophenol	67	ND	D037	100	
Pyridine	67	ND	D038	5	
METALS					
Arsenic	67	ND	D004	5	
Barium	67	3.8	D005	100	
Cadmium	67	ND	D006	1	
Chromium	67	ND	D007	5	
Lead	67	ND	D008	5	
Mercury	67	ND	D009	0.2	
Selenium	67	ND	D010	1	
Silver	67	ND	D011	5	
Misc					
Flash Point	66	69	D001	140	
pH	70	6	D002	2-12.5	
VOA					
1,1-Dichloroethylene	68	ND	D029	0.7	<<<1200
1,2-Dichloroethane	68	ND	D028	0.5	<<<1200
1,4-Dichlorobenzene	68	ND	D027	7.5	<<<5000
Benzene	68	65.21	D018	0.5	<<<1200
Carbon Tetrachloride	68	ND	D019	0.5	<<<1200
Chlorobenzene	68	ND	D021	100	<<<1200
Chloroform	68	4.4	D022	6	<<<5000
Methyl Ethyl Ketone	68	58000	D035	200	**90000**
Tetrachloroethylene	68	102	D039	0.7	<<<1200
Trichloroethylene	68	133	D040	0.5	<<<1200
Vinyl Chloride	68	ND	D043	0.2	<<<500

Paint Waste Other

Analysis	Number of Samples	90 UCL for the 50th Percentile	Waste Code	Reg Limit	Denton,TX	Albuquerque,NM	Omaha,NE	Sioux Falls,SD	Grand Island,NE	Grand Island,NE	Wichita,KS	Wichita,KS
				Sample Number	2008511	2015439	2015467	2016047	2017636	2017639	2018173	2018179
				Year	2000	2000	2000	2000	2000	2000	2000	2000
BNA												
2,4,5-Trichlorophenol	90	ND	D041	400	<200	<200	<200	<200	<200	<200	<200	<200
2,4,6-Trichlorophenol	90	ND	D042	2	<200	<200	<200	<200	<200	<200	<200	<200
2,4-Dinitrotoluene	90	ND	D030	0.13	<110	<40	<40	<40	<40	<40	<40	<40
2-Methylphenol	90	ND	D023	200	<200	<200	<200	<200	<200	<200	<200	<200
3+4-Methylphenol	90	ND	D024/25	200	<200	<200	<200	<200	<200	<200	<200	<200
Hexachlorobenzene	90	ND	D032	0.13	<170	<40	<40	<40	<40	<40	<40	<40
Hexachlorobutadiene	90	ND	D033	0.5	<200	<200	<200	<200	<200	<200	<200	<200
Hexachloroethane	90	ND	D034	3	<200	<200	<200	<200	<200	<200	<200	<200
Nitrobenzene	90	ND	D036	2	<200	<200	<200	<200	<200	<200	<200	<200
Pentachlorophenol	90	ND	D037	100	<200	<200	<200	<200	<200	<200	<200	<200
Pyridine	90	ND	D038	5	<210	<210	<210	<210	<210	<210	<200	<200
METALS												
Arsenic	90	ND	D004	5	<5.00	<5.00	<5.00	<5.00	<5.00	<5.00	<5.00	<5.00
Barium	90	ND	D005	100	12.3	81.6	18.3	5.58	9.18	**846**	8.22	1.30
Cadmium	90	ND	D006	1	<0.500	<0.500	<0.500	<0.500	<0.500	<0.500	<0.500	<0.500
Chromium	90	1.6	D007	5	**9.59**	1.56	**7.28**	<0.500	<0.500	**11.1**	1.90	2.47
Lead	90	ND	D008	5	**41.1**	<4.00	<4.00	<4.00	<4.00	**29.4**	<4.00	<4.00
Mercury	89	ND	D009	0.2	<0.10	<0.10	<0.040	<0.10	<0.10	<0.10	<0.040	<0.040
Selenium	90	ND	D010	1	<0.45	<0.45	<0.008	<0.45	<0.45	<0.45	<0.008	<0.008
Silver	90	ND	D011	5	<0.500	<0.500	<0.500	<0.500	<0.500	<0.500	<0.500	<0.500
Misc												
Flash Point	88	69	D001	140	<70	**69**	**69**	**69**	**69**	**69**	**69**	**69**
pH	92	6.25	D002	2-12.5	7.33	6.0	5.2	4.4	5.03	6.5	5.75	6.62
VOA												
1,1-Dichloroethylene	89	ND	D029	0.7	<40	<40	<4.0	<4.0	<4.0	<40	<4.0	<4.0
1,2-Dichloroethane	89	ND	D028	0.5	<20	<20	<2.0	<2.0	<2.0	<20	<2.0	<2.0
1,4-Dichlorobenzene	89	ND	D027	7.5	<50	<50	<5.0	<5.0	<5.0	<50	<5.0	<5.0
Benzene	89	69	D018	0.5	**30.4**	<20	**90.3**	**46.6**	**81.6**	**64.2**	**69**	**48**
Carbon Tetrachloride	89	ND	D019	0.5	<20	<20	<2.0	<2.0	<2.0	<20	<2.0	<2.0
Chlorobenzene	89	1.8	D021	100	<20	<20	<2.0	<2.0	<2.0	<20	<2.0	<2.0
Chloroform	89	ND	D022	6	<20	<20	<2.0	2.4	<2.0	<20	<2.0	<2.0
Methyl Ethyl Ketone	89	25000	D035	200	**21500**	**13300**	**18800**	**19900**	**24300**	**67500**	**25200**	**14900**
Tetrachloroethylene	89	ND	D039	0.7	<20	**291**	**101**	**60.8**	**124**	**231**	**73.8**	**19.2**
Trichloroethylene	89	ND	D040	0.5	<20	<20	**98.6**	**53.4**	**84.1**	**53.5**	**61.1**	**15**
Vinyl Chloride	89	ND	D043	0.2	<15	<15	<1.5	<1.5	<1.5	<15	<1.5	<1.5

Paint Waste Other

Analysis	Number of Samples	90 UCL for the 50th Percentile	Waste Code	Reg Limit	Salt Lake City,UT	Pineville,LA	Pineville,LA	St_ Charles,MO	Columbus,GA	Norcross,GA	Greer,SC	Salt Lake City,UT
				Sample Number	2029637	2039384	2045066	2045082	2050721	2050733	2053038	2058616
				Year	2000	2000	2000	2000	2000	2000	2000	2000
BNA												
2,4,5-Trichlorophenol	90	ND	D041	400	<0.10	<200	<200	<200	<200	<200	<200	<0.50
2,4,6-Trichlorophenol	90	ND	D042	2	<0.10	<200	<200	<200	<200	<200	<200	<0.50
2,4-Dinitrotoluene	90	ND	D030	0.13	<0.020	<40	<40	<40	<40	<40	<40	<0.10
2-Methylphenol	90	ND	D023	200	<10.0	<200	<200	<200	<200	<200	<200	<50
3+4-Methylphenol	90	ND	D024/25	200	<10.0	<200	<200	<200	<200	<200	<200	<50
Hexachlorobenzene	90	ND	D032	0.13	<0.020	<40	<40	<40	<40	<40	<40	<0.10
Hexachlorobutadiene	90	ND	D033	0.5	<0.10	<200	<200	<200	<200	<200	<200	<0.50
Hexachloroethane	90	ND	D034	3	<0.10	<200	<200	<200	<200	<200	<200	<0.50
Nitrobenzene	90	ND	D036	2	<0.10	<200	<200	<200	<200	<200	<200	<0.50
Pentachlorophenol	90	ND	D037	100	<0.10	<200	<200	<200	<200	<200	<200	<0.50
Pyridine	90	ND	D038	5	<0.11	<210	<210	<210	<210	<210	<210	<0.54
METALS												
Arsenic	90	ND	D004	5	<0.500	<5.00	<5.00	<5.00	<5.00	<5.00	<5.00	<0.500
Barium	90	ND	D005	100	2.23	3.5	4.09	**756**	2.59	3.49	28.3	2.07
Cadmium	90	ND	D006	1	<0.050	**1.39**	<0.500	<0.500	<0.500	<0.500	<0.500	<0.050
Chromium	90	1.6	D007	5	<0.050	0.514	2.53	3.51	0.737	<0.500	2.04	<0.050
Lead	90	ND	D008	5	<0.400	<4.00	**8.97**	<4.00	<4.00	<4.00	<4.00	<0.400
Mercury	89	ND	D009	0.2	<0.0008	<0.10	<0.10	<0.10	<0.10	<0.10	<0.10	0.002
Selenium	90	ND	D010	1	<0.750	<0.45	<0.45	<0.45	<0.45	<0.45	<0.45	<0.750
Silver	90	ND	D011	5	<0.050	<0.500	0.881	<0.500	<0.500	<0.500	<0.500	<0.050
Misc												
Flash Point	88	69	D001	140	**69**	**69**	**69**	**69**	**69**	**69**	**69**	**69**
pH	92	6.25	D002	2-12.5	5.99	5.89	5.8	6.11	2.98	7.4	4.48	7.42
VOA												
1,1-Dichloroethylene	89	ND	D029	0.7	<4.0	<4.0	<4.0	<4.0	<4.0	<4.0	<4.0	<0.20
1,2-Dichloroethane	89	ND	D028	0.5	<4.0	<2.0	<2.0	<2.0	<2.0	<4.0	<2.0	<0.20
1,4-Dichlorobenzene	89	ND	D027	7.5	<4.0	<5.0	<5.0	<5.0	<5.0	<4.0	<5.0	<0.20
Benzene	89	69	D018	0.5	<4.0	**64.8**	**78.8**	**8.6**	<2.0	**15.59**	**60.2**	0.465
Carbon Tetrachloride	89	ND	D019	0.5	<4.0	<2.0	<2.0	<2.0	<2.0	<4.0	<2.0	<0.20
Chlorobenzene	89	1.8	D021	100	<4.0	<2.0	<2.0	<2.0	<2.0	<4.0	<2.0	<0.20
Chloroform	89	ND	D022	6	<4.0	<2.0	<2.0	<2.0	<2.0	<4.0	<2.0	<0.20
Methyl Ethyl Ketone	89	25000	D035	200	**736.1**	**28200**	**22400**	**15900**	**56700**	**33320**	**26300**	**4808**
Tetrachloroethylene	89	ND	D039	0.7	<4.0	**5.6**	**10.6**	<2.0	<2.0	<4.0	**77.8**	<0.20
Trichloroethylene	89	ND	D040	0.5	<4.0	<2.0	<2.0	<2.0	<2.0	<4.0	**188**	<0.20
Vinyl Chloride	89	ND	D043	0.2	<2.8	<1.5	<1.5	<1.5	<1.5	<2.8	<1.5	<0.14

Paint Waste Other

				Sample Number	2066248	2066753	2066970	2066975	2066992	2067060	2067065	2078172
				Year	2000	2000	2000	2000	2000	2000	2000	2001
Analysis	Number of Samples	90 UCL for the 50th Percentile	Waste Code	Reg Limit	El Monte,CA	Sacramento,CA	Los Angeles,CA	Oakland,CA	Highland,CA	Santa Anna,CA	Fresno,CA	Omaha,NE
BNA												
2,4,5-Trichlorophenol	90	ND	D041	400	<200	<200	<200	<200	<200	<200	<200	<200
2,4,6-Trichlorophenol	90	ND	D042	2	<200	<200	<200	<200	<200	<200	<200	<200
2,4-Dinitrotoluene	90	ND	D030	0.13	<40	<40	<40	<40	<40	<40	<40	<40
2-Methylphenol	90	ND	D023	200	<200	<200	<200	<200	<200	<200	<200	<200
3+4-Methylphenol	90	ND	D024/25	200	<200	<200	<200	<200	<200	<200	<200	<200
Hexachlorobenzene	90	ND	D032	0.13	<40	<40	<40	<40	<40	<40	<40	<40
Hexachlorobutadiene	90	ND	D033	0.5	<200	<200	<200	<200	<200	<200	<200	<200
Hexachloroethane	90	ND	D034	3	<200	<200	<200	<200	<200	<200	<200	<200
Nitrobenzene	90	ND	D036	2	<200	<200	<200	<200	<200	<200	<200	<200
Pentachlorophenol	90	ND	D037	100	<200	<200	<200	<200	<200	<200	<200	<200
Pyridine	90	ND	D038	5	<210	<210	<210	<210	<210	<210	<210	<210
METALS												
Arsenic	90	ND	D004	5	<5.00	<5.00	<5.00	<5.00	<5.00	<5.00	<5.00	<5.00
Barium	90	ND	D005	100	<0.500	<0.500	<0.500	1.63	<0.500	6.21	<0.500	**147**
Cadmium	90	ND	D006	1	<0.500	<0.500	<0.500	<0.500	<0.500	<0.500	<0.500	<0.500
Chromium	90	1.6	D007	5	<0.500	<0.500	1.10	<0.500	<0.500	<0.500	<0.500	1.14
Lead	90	ND	D008	5	<4.00	<4.00	<4.00	<4.00	<4.00	<4.00	<4.00	<4.00
Mercury	89	ND	D009	0.2	<0.10	<0.10	<0.10	<0.10	<0.10	<0.10	<0.10	<0.10
Selenium	90	ND	D010	1	<0.45	<0.45	<0.45	<0.45	<0.45	<0.45	<0.45	<0.45
Silver	90	ND	D011	5	<0.500	<0.500	<0.500	<0.500	<0.500	<0.500	<0.500	<0.500
Misc												
Flash Point	88	69	D001	140	**69**	**69**	**69**	**69**	**69**	**69**	**69**	**69**
pH	92	6.25	D002	2-12.5	4.88	4.58	4.65	4.73	6.29	5.06	4.57	5.93
VOA												
1,1-Dichloroethylene	89	ND	D029	0.7	<4.0	<16	<40	<4.0	<80	<8.0	<400	<2.0
1,2-Dichloroethane	89	ND	D028	0.5	<2.0	<8.0	<20	<2.0	<40	<4.0	<200	<1.0
1,4-Dichlorobenzene	89	ND	D027	7.5	<5.0	<20	<50	<5.0	<100	<10.0	<500	<2.5
Benzene	89	69	D018	0.5	**242**	**160**	**202**	<2.0	**279**	**187**	**299**	**25.1**
Carbon Tetrachloride	89	ND	D019	0.5	<2.0	<8.0	<20	<2.0	<40	<4.0	<200	<1.0
Chlorobenzene	89	1.8	D021	100	<2.0	<8.0	<20	<2.0	<40	<4.0	<200	<1.0
Chloroform	89	ND	D022	6	<2.0	<8.0	<20	<2.0	<40	<4.0	<200	<1.0
Methyl Ethyl Ketone	89	25000	D035	200	**29300**	**51800**	**74500**	**17600**	**95800**	**47500**	**118000**	**5930**
Tetrachloroethylene	89	ND	D039	0.7	<2.0	**87.1**	**457**	**24.1**	<40	**18.7**	<200	**47.1**
Trichloroethylene	89	ND	D040	0.5	<2.0	**73**	<20	<2.0	<40	**18.3**	<200	**76.5**
Vinyl Chloride	89	ND	D043	0.2	<1.5	<6.0	<15	<1.5	<30	<3.0	<150	<0.75

Paint Waste Other

Analysis	Number of Samples	90 UCL for the 50th Percentile	Waste Code	Reg Limit	Albuquerque,NM	Salt Lake City,UT	Clackamas,OR	Clackamas,OR	Lackawanna,NY	Lackawanna,NY	Lackawanna,NY
				Sample Number	2082502	2083128	2085320	2085322	2085850	2085855	2085875
				Year	2001	2001	2001	2001	2001	2001	2001
BNA											
2,4,5-Trichlorophenol	90	ND	D041	400	<200	<181.2	<300	<300	<300	<300	<300
2,4,6-Trichlorophenol	90	ND	D042	2	<200	<181.2	<300	<300	<300	<300	<300
2,4-Dinitrotoluene	90	ND	D030	0.13	<40	<24.16	<40	<40	<40	<40	<40
2-Methylphenol	90	ND	D023	200	<200	<320	<400	<400	<400	<400	<400
3+4-Methylphenol	90	ND	D024/25	200	<200	<380	<500	<500	<500	<500	<500
Hexachlorobenzene	90	ND	D032	0.13	<40	<24.16	<40	<40	<40	<40	<40
Hexachlorobutadiene	90	ND	D033	0.5	<200	<120.8	<200	<200	<200	<200	<200
Hexachloroethane	90	ND	D034	3	<200	<120.8	<200	<200	<200	<200	<200
Nitrobenzene	90	ND	D036	2	<200	<120.8	<200	<200	<200	<200	<200
Pentachlorophenol	90	ND	D037	100	<200	<314.08	<520	<520	<520	<520	<520
Pyridine	90	ND	D038	5	<210	<350.32	<580	<580	<580	<580	<580
METALS											
Arsenic	90	ND	D004	5	<5.00	<5	<5.00	<5.00	<5.00	<5.00	<5.00
Barium	90	ND	D005	100	45.1	1.609	31.4	**136**	**172**	3.97	3.77
Cadmium	90	ND	D006	1	<0.500	0.661	<0.500	<0.500	<0.500	<0.500	<0.500
Chromium	90	1.6	D007	5	<0.500	**61.366**	<0.500	**34.8**	3.59	**7.66**	<0.500
Lead	90	ND	D008	5	<4.00	**11.447**	<4.00	**177**	<4.00	<4.00	<4.00
Mercury	89	ND	D009	0.2	<0.10	<0.1	<0.10	<0.10	<0.10	<0.10	<0.10
Selenium	90	ND	D010	1	<0.45	<0.45	<0.45	<0.45	<0.45	<0.45	<0.45
Silver	90	ND	D011	5	<0.500	<0.5	<0.500	<0.500	<0.500	<0.500	<0.500
Misc											
Flash Point	88	69	D001	140	**69**	**69**	**69**	**69**	**69**	**69**	**69**
pH	92	6.25	D002	2-12.5	6.21	3.93	5.20	5.81	7.32	5.82	6.76
VOA											
1,1-Dichloroethylene	89	ND	D029	0.7	<4.0	<3.2	<2.0	<1.6	<2.0	<2.0	<1.6
1,2-Dichloroethane	89	ND	D028	0.5	<2.0	<2	<1.0	<0.80	<1.0	<1.0	<0.80
1,4-Dichlorobenzene	89	ND	D027	7.5	<5.0	<3.8	<2.5	<2.0	<2.5	<2.5	<2.0
Benzene	89	69	D018	0.5	<2.0	**13.914**	**169**	**118**	**16.9**	**23.2**	**31.2**
Carbon Tetrachloride	89	ND	D019	0.5	<2.0	<2	<1.0	<0.80	<1.0	<1.0	<0.80
Chlorobenzene	89	1.8	D021	100	<2.0	<2	<1.0	<0.80	<1.0	<1.0	<0.80
Chloroform	89	ND	D022	6	<2.0	<2	<1.0	<0.80	<1.0	<1.0	<0.80
Methyl Ethyl Ketone	89	25000	D035	200	**15900**	**1003.8**	**9130**	**4490**	**7790**	**6870**	**5570**
Tetrachloroethylene	89	ND	D039	0.7	<2.0	**2.071**	**206**	**28.3**	**10.6**	<1.0	**25.3**
Trichloroethylene	89	ND	D040	0.5	<2.0	<2	**43.4**	**2.6**	**14.7**	<1.0	**55.5**
Vinyl Chloride	89	ND	D043	0.2	<1.5	<1.46	<0.75	<0.60	<0.75	<0.75	<0.60

Paint Waste Other

Analysis	Number of Samples	90 UCL for the 50th Percentile	Waste Code	Reg Limit	Fresno,CA	Columbus,GA	Wichita,KS	Los Angeles,CA	Salida,CA	El Monte,CA	Santa Anna,CA	Tulsa,OK	Sacramento,CA
				Sample Number	2087151	2088235	2088684	2088997	2089541	2089555	2089571	2091678	2091976
				Year	2001	2001	2001	2001	2001	2001	2001	2001	2001
BNA													
2,4,5-Trichlorophenol	90	ND	D041	400	<300	<0.060	<0.15	<300	<300	<300	<300	<300	<300
2,4,6-Trichlorophenol	90	ND	D042	2	<300	<0.060	<0.15	<300	<300	<300	<300	<300	<300
2,4-Dinitrotoluene	90	ND	D030	0.13	<40	<0.0080	<0.020	<40	<40	<40	<40	<40	<40
2-Methylphenol	90	ND	D023	200	<400	<4.0	<10.0	<400	<400	<400	<400	<400	<400
3+4-Methylphenol	90	ND	D024/25	200	<500	<4.0	<10.0	<500	<500	<500	<500	<500	<500
Hexachlorobenzene	90	ND	D032	0.13	<40	<0.0080	<0.020	<40	<40	<40	<40	<40	<40
Hexachlorobutadiene	90	ND	D033	0.5	<200	<0.040	<0.050	<100	<100	<100	<100	<200	<200
Hexachloroethane	90	ND	D034	3	<200	<0.040	<0.10	<200	<200	<200	<200	<200	<200
Nitrobenzene	90	ND	D036	2	<200	<0.040	<0.10	<200	<200	<200	<200	<200	<200
Pentachlorophenol	90	ND	D037	100	<520	<0.10	<0.26	<520	<520	<520	<520	<520	<520
Pyridine	90	ND	D038	5	<580	<0.12	<0.29	<580	<580	<580	<580	<580	<580
METALS													
Arsenic	90	ND	D004	5	<5.00	<0.500	<0.500	<5.00	<5.00	<5.00	<5.00	<5.00	<5.00
Barium	90	ND	D005	100	13.9	1.53	1.22	36.9	<0.500	<0.500	3.74	7.21	12.6
Cadmium	90	ND	D006	1	<0.500	<0.050	<0.050	<0.500	<0.500	<0.500	<0.500	<0.500	<0.500
Chromium	90	1.6	D007	5	2.98	<0.050	<0.050	1.24	<0.500	<0.500	2.04	**5.11**	2.29
Lead	90	ND	D008	5	<4.00	<0.400	<0.400	**5.98**	<4.00	<4.00	<4.00	**23.7**	**6.43**
Mercury	89	ND	D009	0.2	<0.10	<0.0008	0.001	<0.100	<0.10	<0.10	<0.10	<0.10	<0.10
Selenium	90	ND	D010	1	<0.45	<0.750	<0.750	<0.45	<0.45	<0.45	<0.45	<0.45	<0.45
Silver	90	ND	D011	5	<0.500	<0.050	<0.050	<0.500	<0.500	<0.500	<0.500	<0.500	<0.500
Misc													
Flash Point	88	69	D001	140	**69**	**69**	**69**	**69**	**69**	**69**	**69**	**69**	**69**
pH	92	6.25	D002	2-12.5	5.34	4.01	5.52	6.12	6.65	8.95	5.42	6.24	4.58
VOA													
1,1-Dichloroethylene	89	ND	D029	0.7	<2.0	<0.20	<0.20	<40	<40	<4.0	<200	<4.0	<20
1,2-Dichloroethane	89	ND	D028	0.5	<1.0	<0.20	<0.20	<20	<20	<2.0	<100	<2.0	<10.0
1,4-Dichlorobenzene	89	ND	D027	7.5	<2.5	<0.20	<0.20	<50	<50	<5.0	<250	<5.0	<25
Benzene	89	69	D018	0.5	**129**	<0.20	<0.20	**46.3**	**94.8**	**49.5**	<100	**13.1**	**73.7**
Carbon Tetrachloride	89	ND	D019	0.5	<1.0	<0.20	<0.20	<20	<20	<2.0	<100	<2.0	<10.0
Chlorobenzene	89	1.8	D021	100	<1.0	<0.20	<0.20	<20	<20	<2.0	<100	<2.0	<10.0
Chloroform	89	ND	D022	6	<1.0	<0.20	<0.20	<20	<20	<2.0	<100	<2.0	<10.0
Methyl Ethyl Ketone	89	25000	D035	200	**62500**	**320.4**	**717.6**	**235000**	**438000**	**157000**	**171000**	**96900**	**337000**
Tetrachloroethylene	89	ND	D039	0.7	**5.1**	<0.20	<0.20	**62.9**	**26.4**	**16.5**	<100	**3.5**	**33.4**
Trichloroethylene	89	ND	D040	0.5	<1.0	<0.20	<0.20	<20	<20	<2.0	<100	<2.0	**12**
Vinyl Chloride	89	ND	D043	0.2	<0.75	<0.14	<0.14	<15	<15	<1.5	<75	<1.5	<7.5

Paint Waste Other

Analysis	Number of Samples	90 UCL for the 50th Percentile	Waste Code	Reg Limit	Pineville,LA	Oklahoma City,OK	Greer,SC	Rohnert Park,CA	Rohnert Park,CA	Salt Lake City,UT	Highland,CA
				Sample Number	2093903	2097541	2098613	2099451	2118872	2118886	2119076
				Year	2001	2001	2001	2001	2001	2001	2001
BNA											
2,4,5-Trichlorophenol	90	ND	D041	400	<300	<300	<300	<300	<300	<0.75	<0.75
2,4,6-Trichlorophenol	90	ND	D042	2	<300	<300	<300	<300	<300	<0.75	<0.75
2,4-Dinitrotoluene	90	ND	D030	0.13	<40	<40	<40	<40	<40	<0.10	<0.10
2-Methylphenol	90	ND	D023	200	<400	<400	<400	<400	<400	<50	<50
3+4-Methylphenol	90	ND	D024/25	200	<400	<400	<400	<400	<400	<50	<50
Hexachlorobenzene	90	ND	D032	0.13	<40	<40	<40	<40	<40	<0.10	<0.10
Hexachlorobutadiene	90	ND	D033	0.5	<200	<100	<200	<200	<200	<0.50	<0.50
Hexachloroethane	90	ND	D034	3	<200	<200	<200	<200	<200	<0.50	<0.50
Nitrobenzene	90	ND	D036	2	<200	<200	<200	<200	<200	<0.50	<0.50
Pentachlorophenol	90	ND	D037	100	<520	<520	<520	<520	<520	<1.3	<1.3
Pyridine	90	ND	D038	5	<500	<500	<500	<500	<500	<1.3	<1.3
METALS											
Arsenic	90	ND	D004	5	<5.00	<5.00	<5.00	<5.00	<5.00	<0.500	<0.500
Barium	90	ND	D005	100	3.18	1.25	69.8	0.826	**158**	3.43	**139**
Cadmium	90	ND	D006	1	<0.500	<0.500	<0.500	<0.500	<0.500	<0.050	<0.050
Chromium	90	1.6	D007	5	0.854	1.04	1.72	1.84	**5.31**	0.633	<0.050
Lead	90	ND	D008	5	<4.00	<4.00	**8.51**	**19.4**	<4.00	<0.400	<0.400
Mercury	89	ND	D009	0.2	<0.10	<0.10	<0.10	0.10	<0.10	<0.0008	0.006
Selenium	90	ND	D010	1	<0.45	<0.45	<0.45	<0.45	<0.45	<0.750	<0.750
Silver	90	ND	D011	5	<0.500	<0.500	<0.500	<0.500	<0.500	<0.050	<0.050
Misc											
Flash Point	88	69	D001	140	**69**	**69**	<70	<70	<70	<70	<70
pH	92	6.25	D002	2-12.5	7.07	5.18	6.70	6.25	6.62	6.35	8.22
VOA											
1,1-Dichloroethylene	89	ND	D029	0.7	<40	<4.0	<4.0	<0.40	<4.0	<0.20	<2.0
1,2-Dichloroethane	89	ND	D028	0.5	<20	<2.0	<2.0	<0.20	<2.0	<0.20	<2.0
1,4-Dichlorobenzene	89	ND	D027	7.5	<50	<5.0	<5.0	<0.50	<5.0	<0.20	<2.0
Benzene	89	69	D018	0.5	**44.8**	**89.4**	**28.4**	**25.6**	**77.6**	**0.681**	<2.0
Carbon Tetrachloride	89	ND	D019	0.5	<20	<2.0	**6.4**	<0.20	**3**	<0.20	<2.0
Chlorobenzene	89	1.8	D021	100	<20	<2.0	<2.0	<0.20	<2.0	<0.20	<2.0
Chloroform	89	ND	D022	6	<20	<2.0	**42.5**	<0.20	<2.0	<0.20	<2.0
Methyl Ethyl Ketone	89	25000	D035	200	**174000**	**216000**	**124000**	**16300**	**20300**	103.6	**459.1**
Tetrachloroethylene	89	ND	D039	0.7	**11200**	**66**	**59.2**	**4**	**13.1**	<0.20	**2.958**
Trichloroethylene	89	ND	D040	0.5	<20	**27.1**	**78**	0.25	**3**	<0.20	<2.0
Vinyl Chloride	89	ND	D043	0.2	<15	<1.5	<1.5	<0.15	<1.5	<0.14	<1.4

Paint Waste Other

				Sample Number	2121672	2122337	2122899	2131620	2134372	2138222	2139807	2139817
				Year	2001	2001	2001	2002	2002	2002	2002	2002
Analysis	**Number of Samples**	**90 UCL for the 50th Percentile**	**Waste Code**	**Reg Limit**	Santa Anna,CA	Sylmar,CA	El Monte,CA	Los Angeles,CA	Denton,TX	Greer,SC	Fresno,CA	Salt Lake City,UT
BNA												
2,4,5-Trichlorophenol	90	ND	D041	400	<0.15	<300	<300	<300	<300	<300	<300	<0.040
2,4,6-Trichlorophenol	90	ND	D042	2	<0.15	<300	<300	<300	<300	<300	<300	<0.040
2,4-Dinitrotoluene	90	ND	D030	0.13	<0.020	<40	<40	<40	<40	<40	<40	<0.040
2-Methylphenol	90	ND	D023	200	<10.0	<400	<400	<400	<400	<400	<400	<0.040
3+4-Methylphenol	90	ND	D024/25	200	<10.0	<400	<400	<400	<400	<400	<400	<0.040
Hexachlorobenzene	90	ND	D032	0.13	<0.020	<40	<40	<40	<40	<40	<40	<0.040
Hexachlorobutadiene	90	ND	D033	0.5	<0.10	<200	<200	<200	<100	<200	<100	<0.040
Hexachloroethane	90	ND	D034	3	<0.10	<200	<200	<200	<200	<200	<200	<0.040
Nitrobenzene	90	ND	D036	2	<0.10	<200	<200	<200	<200	<200	<200	<0.040
Pentachlorophenol	90	ND	D037	100	<0.26	<520	<520	<520	<520	<520	<520	<0.20
Pyridine	90	ND	D038	5	<0.25	<500	<500	<500	<500	<500	<500	<0.040
METALS												
Arsenic	90	ND	D004	5	<0.500	<5.00	<5.00	<5.00	<5.00	<5.00	<5.00	<0.500
Barium	90	ND	D005	100	<0.050	23.9	2.21	2.89	44.9	<5.00	<5.00	2.93
Cadmium	90	ND	D006	1	<0.050	<0.500	<0.500	<0.500	<0.500	<0.500	<0.500	<0.050
Chromium	90	1.6	D007	5	<0.050	0.996	0.591	<0.500	3.13	**6.36**	<0.500	<0.050
Lead	90	ND	D008	5	<0.400	<4.00	<4.00	<4.00	<4.00	<4.00	<4.00	<0.400
Mercury	89	ND	D009	0.2	<0.0008	<0.10	<0.10	<0.10	<0.040	<0.040	<0.040	
Selenium	90	ND	D010	1	<0.750	<0.45	<0.45	<0.45	<0.45	<0.45	<0.45	<0.750
Silver	90	ND	D011	5	<0.050	<0.500	<0.500	<0.500	<0.500	<0.500	<0.500	<0.050
Misc												
Flash Point	88	69	D001	140	**69**	**69**	**69**	**69**	**69**	**69**	<70	<70
pH	92	6.25	D002	2-12.5	5.60	5.33	3.91	5.36	4.61	4.56	5.12	5.53
VOA												
1,1-Dichloroethylene	89	ND	D029	0.7	<2.0	<4.0	<2.0	<2.0	<0.40	<0.40	<4.0	<0.20
1,2-Dichloroethane	89	ND	D028	0.5	<2.0	<2.0	<1.0	<1.0	<0.20	<0.20	<2.0	<0.20
1,4-Dichlorobenzene	89	ND	D027	7.5	<2.0	<5.0	<2.5	<2.5	<0.50	<0.50	<5.0	<0.20
Benzene	89	69	D018	0.5	<2.0	**28.1**	**69.3**	**47.3**	**36.3**	**36.8**	**13.7**	**1.156**
Carbon Tetrachloride	89	ND	D019	0.5	<2.0	<2.0	<1.0	<1.0	<0.20	<0.20	<2.0	<0.20
Chlorobenzene	89	1.8	D021	100	<2.0	<2.0	<1.0	<1.0	<0.20	<0.20	<2.0	<0.20
Chloroform	89	ND	D022	6	<2.0	<2.0	<1.0	<1.0	<0.20	<0.20	<2.0	<0.20
Methyl Ethyl Ketone	89	25000	D035	200	**661.5**	**12900**	**14900**	**8120**	**5680**	**10200**	**14300**	104.9
Tetrachloroethylene	89	ND	D039	0.7	<2.0	<2.0	<1.0	**5**	**24.9**	**49.2**	<2.0	<0.20
Trichloroethylene	89	ND	D040	0.5	<2.0	<2.0	<1.0	<1.0	**14.8**	**36.4**	<2.0	<0.20
Vinyl Chloride	89	ND	D043	0.2	<1.4	<1.5	<0.75	<0.75	<0.15	<0.15	<1.5	<0.14

Paint Waste Other

				Sample Number	2139854	2140172	2140413	2141007	2141029	2141873	2142963	2145206
				Year	2002	2002	2002	2002	2002	2002	2002	2002
Analysis	**Number of Samples**	**90 UCL for the 50th Percentile**	**Waste Code**	**Reg Limit**	Los Angeles,CA	Salida,CA	El Monte,CA	Norcross,GA	Oakland,CA	Highland,CA	Santa Anna,CA	Rohnert Park,CA
BNA												
2,4,5-Trichlorophenol	90	ND	D041	400	<300	<0.15	<300	<300	<0.15	<5.0	<300	<21.1395
2,4,6-Trichlorophenol	90	ND	D042	2	<300	<0.15	<300	<300	<0.15	<2.0	<300	<21.1395
2,4-Dinitrotoluene	90	ND	D030	0.13	<40	<0.020	<40	<40	<0.020	<0.13	<40	<2.8186
2-Methylphenol	90	ND	D023	200	<400	<10.0	<400	<400	<10.0	<5.0	<400	<37.3
3+4-Methylphenol	90	ND	D024/25	200	<400	<10.0	<400	<400	<10.0	<5.0	<400	<37.3
Hexachlorobenzene	90	ND	D032	0.13	<40	<0.020	<40	<40	<0.020	<0.025	<40	<2.8186
Hexachlorobutadiene	90	ND	D033	0.5	<100	<0.050	<100	<100	<0.10	<0.10	<200	<14.093
Hexachloroethane	90	ND	D034	3	<200	<0.10	<200	<200	<0.10	<1.0	<200	<14.093
Nitrobenzene	90	ND	D036	2	<200	<0.10	<200	<200	<0.10	<0.40	<200	<14.093
Pentachlorophenol	90	ND	D037	100	<520	<0.26	<520	<520	<0.26	<5.0	<520	<36.6418
Pyridine	90	ND	D038	5	<500	<0.25	<500	<500	<0.25	<1.0	<500	<35.2325
METALS												
Arsenic	90	ND	D004	5	<5.00	<0.500	<5.00	<5.00	<0.500	<5.00	<5.00	<0.815
Barium	90	ND	D005	100	<5.00	<0.500	<5.00	<5.00	1.03	<5.00	12.4	3.42
Cadmium	90	ND	D006	1	<0.500	<0.050	<0.500	<0.500	<0.050	<0.500	0.805	<0.0815
Chromium	90	1.6	D007	5	1.58	<0.050	<0.500	<0.500	<0.050	<0.500	**102**	2.144
Lead	90	ND	D008	5	<4.00	<0.400	<4.00	<4.00	<0.400	**43.6**	**55.2**	<0.652
Mercury	89	ND	D009	0.2	<0.040	<0.0008	<0.040	<0.10	<0.0008	<0.040	<0.040	<0.007744
Selenium	90	ND	D010	1	<0.45	<0.750	<045	<0.45	<0.750	<0.45	<0.45	<0.729
Silver	90	ND	D011	5	<0.500	<0.050	<0.500	<0.500	<0.050	0.676	<0.500	<0.0815
Misc												
Flash Point	88	69	D001	140	<70	<70	**69**	<70	<70	<70	**69**	<70
pH	92	6.25	D002	2-12.5	5.23	8.42	4.38	3.96	5.60	6.29	6.10	5.77
VOA												
1,1-Dichloroethylene	89	ND	D029	0.7	<8.0	<2.0	<0.40	<4.0	<0.20	<0.40	<0.80	<1.84
1,2-Dichloroethane	89	ND	D028	0.5	<4.0	<2.0	<0.20	<2.0	<0.20	<0.20	<0.40	<1.82
1,4-Dichlorobenzene	89	ND	D027	7.5	<10.0	<2.0	<0.50	<5.0	<0.20	<0.50	<1.0	<1.85
Benzene	89	69	D018	0.5	**12.6**	<2.0	**82.4**	**7**	0.208	**38.5**	**49.9**	**3.75**
Carbon Tetrachloride	89	ND	D019	0.5	<4.0	<2.0	<0.20	<2.0	<0.20	<0.20	<0.40	**1.83**
Chlorobenzene	89	1.8	D021	100	<4.0	<2.0	1.8	<2.0	<0.20	<0.20	<0.40	<1.82
Chloroform	89	ND	D022	6	<4.0	<2.0	<0.20	<2.0	<0.20	<0.20	<0.40	<1.82
Methyl Ethyl Ketone	89	25000	D035	200	**14000**	**3857**	**7460**	**22100**	**2930**	**6120**	**6700**	**1945.9**
Tetrachloroethylene	89	ND	D039	0.7	**30.6**	<2.0	**10.9**	**31.3**	<0.20	**50.7**	**8.6**	**5.3**
Trichloroethylene	89	ND	D040	0.5	<4.0	<2.0	**3.3**	**6.9**	<0.20	**6.8**	<0.40	**4.4**
Vinyl Chloride	89	ND	D043	0.2	<3.0	<1.4	<0.15	<1.5	<0.14	<0.15	<0.30	<1.275

Paint Waste Other

Analysis	Number of Samples	90 UCL for the 50th Percentile	Waste Code	Reg Limit	C2F210336001	C2F210336001X	C2G090271001	C2I250303001	C2I250303001R2	C2I250303001X	C2J010127001
				Year	2002	2002	2002	2002	2002	2002	2002
					Pineville,LA	Pineville,LA	Albuquerque,NM	Boise,ID	Boise,ID	Boise,ID	Clackamas,OR
BNA											
2,4,5-Trichlorophenol	90	ND	D041	400	<<<<<<20		<<<<<<20	<<<<<<20			53
2,4,6-Trichlorophenol	90	ND	D042	2	<<<<<<20		<<<<<<20	<<<<<<20			<<<<<<20
2,4-Dinitrotoluene	90	ND	D030	0.13	<<<<<<20		<<<<<<20	<<<<<<20			<<<<<<20
2-Methylphenol	90	ND	D023	200	<<<<<<20		<<<<<<20	<<<<<<20			44
3+4-Methylphenol	90	ND	D024/25	200	<<<<<<20		<<<<<<20	95			64
Hexachlorobenzene	90	ND	D032	0.13	<<<<<<20		<<<<<<20	<<<<<<20			<<<<<<20
Hexachlorobutadiene	90	ND	D033	0.5	<<<<<<20		<<<<<<20	<<<<<<20			<<<<<<20
Hexachloroethane	90	ND	D034	3	<<<<<<20		<<<<<<20	<<<<<<20			<<<<<<20
Nitrobenzene	90	ND	D036	2	<<<<<<20		<<<<<<20	<<<<<<20			<<<<<<20
Pentachlorophenol	90	ND	D037	100	<<<<<<1200		<<<<<<600	<<<<<<600			<<<<<<600
Pyridine	90	ND	D038	5	<<<<<<20		<<<<<<20	<<<<<<20			43
METALS											
Arsenic	90	ND	D004	5	<<<<<<1		<<<<<<1	<<<<<<1			<<<<<<1
Barium	90	ND	D005	100	<<<<<<20		<<<<<<20	<<<<<<20			<<<<<<20
Cadmium	90	ND	D006	1	<<<<<<0.5		<<<<<<0.5	<<<<<<0.5			<<<<<<0.5
Chromium	90	1.6	D007	5	<<<<<<0.5		0.78	14			<<<<<<0.5
Lead	90	ND	D008	5	<<<<<<0.3		2.4	22.2			0.7
Mercury	89	ND	D009	0.2	<<<<<<0.033		<<<<<<0.033	<<<<<<0.033			<<<<<<0.033
Selenium	90	ND	D010	1	<<<<<<0.5		<<<<<<0.5	1.3			1.7
Silver	90	ND	D011	5	<<<<<<0.5		<<<<<<0.5	<<<<<<0.5			<<<<<<0.5
Misc											
Flash Point	88	69	D001	140		53.3	52.4			67.8	67.7
pH	92	6.25	D002	2-12.5	5.5		8.1	8.5			6.3
VOA											
1,1-Dichloroethylene	89	ND	D029	0.7	<<<<<<500		<<<<<<120		<<<<<<100		
1,2-Dichloroethane	89	ND	D028	0.5	<<<<<<500		<<<<<<120		<<<<<<100		
1,4-Dichlorobenzene	89	ND	D027	7.5	<<<<<<500		<<<<<<120		<<<<<<100		
Benzene	89	69	D018	0.5	<<<<<<500		<<<<<<120		<<<<<<100		
Carbon Tetrachloride	89	ND	D019	0.5	<<<<<<500		<<<<<<120		<<<<<<100		
Chlorobenzene	89	1.8	D021	100	<<<<<<500		<<<<<<120		<<<<<<100		
Chloroform	89	ND	D022	6	<<<<<<2000		<<<<<<500		<<<<<<400		
Methyl Ethyl Ketone	89	25000	D035	200	**31000**		**13000**		**8500**		
Tetrachloroethylene	89	ND	D039	0.7	<<<<<<500		<<<<<<120		<<<<<<100		
Trichloroethylene	89	ND	D040	0.5	<<<<<<500		<<<<<<120		<<<<<<100		
Vinyl Chloride	89	ND	D043	0.2	<<<<<<200		<<<<<<50		<<<<<<40		

Paint Waste Other

Analysis	Number of Samples	90 UCL for the 50th Percentile	Waste Code	Reg Limit	Clackamas,OR	Gering,NE	Grand Island,NE	Grand Island,NE	Avon,NY	Avon,NY	Nepean,ON
				Sample Number	C2J010127001R2	C2J010316001	C2J040332001	C2J040332001R2	C2J150278001	C2J150278001R2	C2J170175001
				Year	2002	2002	2002	2002	2002	2002	2002
BNA											
2,4,5-Trichlorophenol	90	ND	D041	400		64	60		78		71
2,4,6-Trichlorophenol	90	ND	D042	2		<<<<<<20	<<<<<<20		<<<<<<20		<<<<<<20
2,4-Dinitrotoluene	90	ND	D030	0.13		<<<<<<20	<<<<<<20		<<<<<<20		<<<<<<20
2-Methylphenol	90	ND	D023	200		47	62		40		44
3+4-Methylphenol	90	ND	D024/25	200		92	82		88		110
Hexachlorobenzene	90	ND	D032	0.13		<<<<<<20	<<<<<<20		<<<<<<20		<<<<<<20
Hexachlorobutadiene	90	ND	D033	0.5		<<<<<<20	<<<<<<20		<<<<<<20		<<<<<<20
Hexachloroethane	90	ND	D034	3		**90**	<<<<<<20		<<<<<<20		<<<<<<20
Nitrobenzene	90	ND	D036	2		<<<<<<20	<<<<<<20		<<<<<<20		<<<<<<20
Pentachlorophenol	90	ND	D037	100		<<<<<<600	<<<<<<600		<<<<<<600		<<<<<<600
Pyridine	90	ND	D038	5		**54**	**31**		**38**		**36**
METALS											
Arsenic	90	ND	D004	5		1.5	<<<<<<1		<<<<<<1		<<<<<<1
Barium	90	ND	D005	100		<<<<<<20	24.2		<<<<<<20		25.4
Cadmium	90	ND	D006	1		<<<<<<0.5	<<<<<<0.5		<<<<<<0.5		<<<<<<0.5
Chromium	90	1.6	D007	5		<<<<<<0.5	1.3		1.2		**60.1**
Lead	90	ND	D008	5		0.65	0.94		1.1		**207**
Mercury	89	ND	D009	0.2		<<<<<<0.033	<<<<<<0.033		<<<<<<0.033		<<<<<<0.033
Selenium	90	ND	D010	1		**2.8**	0.51		<<<<<<0.5		<<<<<<0.5
Silver	90	ND	D011	5		<<<<<<0.5	<<<<<<0.5		<<<<<<0.5		<<<<<<0.5
Misc											
Flash Point	88	69	D001	140		**67.7**	**67.5**		**67.8**		**67.8**
pH	92	6.25	D002	2-12.5		8.4	8.4		9.5		7.2
VOA											
1,1-Dichloroethylene	89	ND	D029	0.7	<<<<<<2500		<<<<<<0.5			<<<<<<1000	
1,2-Dichloroethane	89	ND	D028	0.5	<<<<<<2500		<<<<<<0.5			<<<<<<1000	
1,4-Dichlorobenzene	89	ND	D027	7.5	<<<<<<2500		<<<<<<0.5			<<<<<<1000	
Benzene	89	69	D018	0.5	<<<<<<2500		**15**			<<<<<<1000	
Carbon Tetrachloride	89	ND	D019	0.5	<<<<<<2500		<<<<<<0.5			<<<<<<1000	
Chlorobenzene	89	1.8	D021	100	<<<<<<2500		<<<<<<0.5			<<<<<<1000	
Chloroform	89	ND	D022	6	<<<<<<10000		<<<<<<2			<<<<<<4000	
Methyl Ethyl Ketone	89	25000	D035	200	**170000**			**22000**		**77000**	
Tetrachloroethylene	89	ND	D039	0.7	<<<<<<2500		**8.3**			<<<<<<1000	
Trichloroethylene	89	ND	D040	0.5	<<<<<<2500		**5**			<<<<<<1000	
Vinyl Chloride	89	ND	D043	0.2	<<<<<<1000		<<<<<<0.2			<<<<<<400	

Paint Waste Other

Analysis	Number of Samples	90 UCL for the 50th Percentile	Waste Code	Reg Limit	Nepean,ON	St_Charles,MO	St_Charles,MO	St_Charles,MO	Salt Lake City,UT	Salt Lake City,UT	Oshawa,ON
				Sample Number	C2J170175001R2	C2K010361001	C2K010361001R2	C2K010361001X	C2K060117001	C2K060117001R2	C2K080294001
				Year	2002	2002	2002	2002	2002	2002	2002
BNA											
2,4,5-Trichlorophenol	90	ND	D041	400		<<<<<<20			<<<<<<20		<<<<<<20
2,4,6-Trichlorophenol	90	ND	D042	2		<<<<<<20			<<<<<<20		<<<<<<20
2,4-Dinitrotoluene	90	ND	D030	0.13		<<<<<<20			<<<<<<20		<<<<<<20
2-Methylphenol	90	ND	D023	200		<<<<<<20			<<<<<<20		<<<<<<20
3+4-Methylphenol	90	ND	D024/25	200		<<<<<<20			<<<<<<20		<<<<<<20
Hexachlorobenzene	90	ND	D032	0.13		<<<<<<20			<<<<<<20		<<<<<<20
Hexachlorobutadiene	90	ND	D033	0.5		<<<<<<20			<<<<<<20		<<<<<<20
Hexachloroethane	90	ND	D034	3		<<<<<<20			<<<<<<20		<<<<<<20
Nitrobenzene	90	ND	D036	2		<<<<<<20			<<<<<<20		<<<<<<20
Pentachlorophenol	90	ND	D037	100		<<<<<<600			<<<<<<600		<<<<<<600
Pyridine	90	ND	D038	5		<<<<<<20			<<<<<<20		<<<<<<20
METALS											
Arsenic	90	ND	D004	5		<<<<<<1			<<<<<<1		<<<<<<1
Barium	90	ND	D005	100		**282**			62.9		**841**
Cadmium	90	ND	D006	1		<<<<<<0.5			<<<<<<0.5		0.85
Chromium	90	1.6	D007	5		<<<<<<0.5			**356**		**70.9**
Lead	90	ND	D008	5		<<<<<<0.3			**1610**		**11.7**
Mercury	89	ND	D009	0.2		<<<<<<0.033			<<<<<<0.033		<<<<<<0.033
Selenium	90	ND	D010	1		<<<<<<0.5			<<<<<<0.5		<<<<<<0.5
Silver	90	ND	D011	5		<<<<<<0.5			<<<<<<0.5		<<<<<<0.5
Misc											
Flash Point	88	69	D001	140		**67.5**			**67.5**		**67.8**
pH	92	6.25	D002	2-12.5				6.9	10.5		7.8
VOA											
1,1-Dichloroethylene	89	ND	D029	0.7	<<<<<<1000		<<<<<<1000			<<<<<<500	<<<<<<0.5
1,2-Dichloroethane	89	ND	D028	0.5	<<<<<<1000		<<<<<<1000			<<<<<<500	<<<<<<0.5
1,4-Dichlorobenzene	89	ND	D027	7.5	<<<<<<1000		<<<<<<1000			<<<<<<500	<<<<<<0.5
Benzene	89	69	D018	0.5	<<<<<<1000		<<<<<<1000			<<<<<<500	**45**
Carbon Tetrachloride	89	ND	D019	0.5	<<<<<<1000		<<<<<<1000			<<<<<<500	<<<<<<0.5
Chlorobenzene	89	1.8	D021	100	<<<<<<1000		<<<<<<1000			<<<<<<500	<<<<<<0.5
Chloroform	89	ND	D022	6	<<<<<<4000		<<<<<<4000			<<<<<<2000	<<<<<<2
Methyl Ethyl Ketone	89	25000	D035	200	**25000**		**11000**			**44000**	
Tetrachloroethylene	89	ND	D039	0.7	<<<<<<1000		<<<<<<1000			<<<<<<500	
Trichloroethylene	89	ND	D040	0.5	<<<<<<1000		<<<<<<1000			<<<<<<500	**78**
Vinyl Chloride	89	ND	D043	0.2	<<<<<<400		<<<<<<400			<<<<<<200	<<<<<<0.2

Paint Waste Other

Analysis	Number of Samples	90 UCL for the 50th Percentile	Waste Code	Reg Limit	C2K080294001R2	C2K080386001	C2K080386001R2	C2K130181001	C2K130181001R2	C2K130202001
				Year	2002	2002	2002	2002	2002	2002
					Oshawa,ON	Los Angeles,CA	Los Angeles,CA	Celmsford,ON	Celmsford,ON	Sacramento,CA
BNA										
2,4,5-Trichlorophenol	90	ND	D041	400		<<20		<<<<<20		<<<<<20
2,4,6-Trichlorophenol	90	ND	D042	2		<<20		<<<<<20		<<<<<20
2,4-Dinitrotoluene	90	ND	D030	0.13		<<20		<<<<<20		<<<<<20
2-Methylphenol	90	ND	D023	200		<<20		<<<<<20		<<<<<20
3+4-Methylphenol	90	ND	D024/25	200		<<20		<<<<<20		<<<<<20
Hexachlorobenzene	90	ND	D032	0.13		<<20		<<<<<20		<<<<<20
Hexachlorobutadiene	90	ND	D033	0.5		<<20		<<<<<20		<<<<<20
Hexachloroethane	90	ND	D034	3		<<20		<<<<<20		<<<<<20
Nitrobenzene	90	ND	D036	2		**32**		<<<<<20		<<<<<20
Pentachlorophenol	90	ND	D037	100		<<600		<<<<<600		<<<<<600
Pyridine	90	ND	D038	5		<<20		<<<<<20		<<<<<20
METALS										
Arsenic	90	ND	D004	5		<<1		<<<<<1		<<<<<1
Barium	90	ND	D005	100		**116**		**406**		**869**
Cadmium	90	ND	D006	1		<<0.5		<<<<<0.5		<<<<<0.5
Chromium	90	1.6	D007	5		**36.8**		**14.4**		**9.2**
Lead	90	ND	D008	5		**138**		**8.4**		**29.3**
Mercury	89	ND	D009	0.2		<<0.033		<<<<<0.033		<<<<<0.033
Selenium	90	ND	D010	1		<<0.5		<<<<<0.5		<<<<<0.5
Silver	90	ND	D011	5		<<0.5		<<<<<0.5		<<<<<0.5
Misc										
Flash Point	88	69	D001	140		**67.8**		**67.5**		**67.5**
pH	92	6.25	D002	2-12.5		5.3		8		7.1
VOA										
1,1-Dichloroethylene	89	ND	D029	0.7			<<500		<<<<<500	
1,2-Dichloroethane	89	ND	D028	0.5			<<500		<<<<<500	
1,4-Dichlorobenzene	89	ND	D027	7.5			<<500		<<<<<500	
Benzene	89	69	D018	0.5			<<500		<<<<<500	
Carbon Tetrachloride	89	ND	D019	0.5			<<500		<<<<<500	
Chlorobenzene	89	1.8	D021	100			<<500		<<<<<500	
Chloroform	89	ND	D022	6			<<2000		<<<<<2000	
Methyl Ethyl Ketone	89	25000	D035	200	**39000**		**15000**		**16000**	
Tetrachloroethylene	89	ND	D039	0.7	<<<<<<500		<<500		<<<<<500	
Trichloroethylene	89	ND	D040	0.5			<<500		<<<<<500	
Vinyl Chloride	89	ND	D043	0.2			<<200		<<<<<200	

Paint Waste Other

Analysis	Number of Samples	90 UCL for the 50th Percentile	Waste Code	Reg Limit	Sample Number	C2K130202001R2	C2K130251001	C2K130251001R2	C2K130283001	C2K130283001R2	C2K130339001	C2K130339001R2
					Year	2002	2002	2002	2002	2002	2002	2002
						Sacramento,CA	Highland,CA	Highland,CA	Rohnert Park,CA	Rohnert Park,CA	El Monte,CA	El Monte,CA
BNA												
2,4,5-Trichlorophenol	90	ND	D041	400			<<<<<20		<0.05		<<<<<20	
2,4,6-Trichlorophenol	90	ND	D042	2			<<<<<20		<0.05		<<<<<20	
2,4-Dinitrotoluene	90	ND	D030	0.13			<<<<<20		<0.05		<<<<<20	
2-Methylphenol	90	ND	D023	200			<<<<<20		<0.05		<<<<<20	
3+4-Methylphenol	90	ND	D024/25	200			<<<<<20		0.079		<<<<<20	
Hexachlorobenzene	90	ND	D032	0.13			<<<<<20		<0.025		<<<<<20	
Hexachlorobutadiene	90	ND	D033	0.5			<<<<<20		<0.1		<<<<<20	
Hexachloroethane	90	ND	D034	3			<<<<<20		<1		<<<<<20	
Nitrobenzene	90	ND	D036	2			<<<<<20		<0.05		<<<<<20	
Pentachlorophenol	90	ND	D037	100			<<<<<600		<3		<<<<<600	
Pyridine	90	ND	D038	5			<<<<<20		<0.05		<<<<<20	
METALS												
Arsenic	90	ND	D004	5			<<<<<1		<1		<<<<<1	
Barium	90	ND	D005	100			**333**		**969**		**122**	
Cadmium	90	ND	D006	1			<<<<<0.5		<0.5		<<<<<0.5	
Chromium	90	1.6	D007	5			0.6		**9.8**		**12.9**	
Lead	90	ND	D008	5			1.4		**22.4**		**51.7**	
Mercury	89	ND	D009	0.2			<<<<<0.033		<0.033		<<<<<0.033	
Selenium	90	ND	D010	1			<<<<<0.5		<0.5		<<<<<0.5	
Silver	90	ND	D011	5			<<<<<0.5		<0.5		<<<<<0.5	
Misc												
Flash Point	88	69	D001	140			**67.5**		**67.5**		**67.5**	
pH	92	6.25	D002	2-12.5			7		7.7		6.9	
VOA												
1,1-Dichloroethylene	89	ND	D029	0.7		<<<<<1200		<<<<<1000		<1000		<<<<<1000
1,2-Dichloroethane	89	ND	D028	0.5		<<<<<1200		<<<<<1000		<1000		<<<<<1000
1,4-Dichlorobenzene	89	ND	D027	7.5		<<<<<1200		<<<<<1000		<1000		<<<<<1000
Benzene	89	69	D018	0.5		<<<<<1200		<<<<<1000		<1000		<<<<<1000
Carbon Tetrachloride	89	ND	D019	0.5		<<<<<1200		<<<<<1000		<1000		<<<<<1000
Chlorobenzene	89	1.8	D021	100		<<<<<1200		<<<<<1000		<1000		<<<<<1000
Chloroform	89	ND	D022	6		<<<<<5000		<<<<<4000		<4000		<<<<<4000
Methyl Ethyl Ketone	89	25000	D035	200		**28000**		**110000**		**34000**		**23000**
Tetrachloroethylene	89	ND	D039	0.7		<<<<<1200		<<<<<1000		<1000		<<<<<1000
Trichloroethylene	89	ND	D040	0.5		<<<<<1200		<<<<<1000		<1000		<<<<<1000
Vinyl Chloride	89	ND	D043	0.2		<<<<<500		<<<<<400		<400		<<<<<400

Paint Waste Other

Analysis	Number of Samples	90 UCL for the 50th Percentile	Waste Code	Reg Limit	Wichita,KS	Wichita,KS	Sacramento,CA	Sacramento,CA	Oakland,CA	Oakland,CA	Santa Anna,CA
				Sample Number	C2K130359001	C2K130359001R2	C2K140144001	C2K140144001R2	C2K140153001	C2K140153001R2	C2K140285001
				Year	2002	2002	2002	2002	2002	2002	2002
BNA											
2,4,5-Trichlorophenol	90	ND	D041	400	<<20		<<<<<20		<<<<<20		<<<<<20
2,4,6-Trichlorophenol	90	ND	D042	2	<<20		<<<<<20		<<<<<20		<<<<<20
2,4-Dinitrotoluene	90	ND	D030	0.13	<<20		<<<<<20		<<<<<20		<<<<<20
2-Methylphenol	90	ND	D023	200	24		<<<<<20		<<<<<20		<<<<<20
3+4-Methylphenol	90	ND	D024/25	200	<<20		<<<<<20		<<<<<20		41
Hexachlorobenzene	90	ND	D032	0.13	<<20		<<<<<20		<<<<<20		<<<<<20
Hexachlorobutadiene	90	ND	D033	0.5	<<20		<<<<<20		<<<<<20		<<<<<20
Hexachloroethane	90	ND	D034	3	<<20		<<<<<20		<<<<<20		<<<<<20
Nitrobenzene	90	ND	D036	2	<<20		<<<<<20		**46**		**48**
Pentachlorophenol	90	ND	D037	100	<<600		<<<<<600		<<<<<600		<<<<<600
Pyridine	90	ND	D038	5	<<20		**80**		**43**		<<<<<20
METALS											
Arsenic	90	ND	D004	5	<<1		<<<<<1		<<<<<1		<<<<<1
Barium	90	ND	D005	100	**673**		**1670**		**921**		**194**
Cadmium	90	ND	D006	1	<<0.5		0.57		<<<<<0.5		<<<<<0.5
Chromium	90	1.6	D007	5	**14.7**		**16.2**		**29.7**		**6**
Lead	90	ND	D008	5	**66.1**		**43.1**		**71.7**		**19.6**
Mercury	89	ND	D009	0.2	<<0.033		<<<<<0.033		<<<<<0.033		<<<<<0.033
Selenium	90	ND	D010	1	<<0.5		<<<<<0.5		<<<<<0.5		<<<<<0.5
Silver	90	ND	D011	5	<<0.5		<<<<<0.5		<<<<<0.5		<<<<<0.5
Misc											
Flash Point	88	69	D001	140	**67.5**		**67.5**		**67.5**		**67.8**
pH	92	6.25	D002	2-12.5	5.8		6.7		7.2		6.8
VOA											
1,1-Dichloroethylene	89	ND	D029	0.7		<<1000		<<<<<1000		<<<<<1000	
1,2-Dichloroethane	89	ND	D028	0.5		<<1000		<<<<<1000		<<<<<1000	
1,4-Dichlorobenzene	89	ND	D027	7.5		<<4000		<<<<<4000		<<<<<4000	
Benzene	89	69	D018	0.5		<<1000		<<<<<1000		<<<<<1000	
Carbon Tetrachloride	89	ND	D019	0.5		<<1000		<<<<<1000		<<<<<1000	
Chlorobenzene	89	1.8	D021	100		<<1000		<<<<<1000		<<<<<1000	
Chloroform	89	ND	D022	6		<<4000		<<<<<4000		<<<<<4000	
Methyl Ethyl Ketone	89	25000	D035	200		**52000**		**43000**		**38000**	
Tetrachloroethylene	89	ND	D039	0.7		<<1000		<<<<<1000		<<<<<1000	
Trichloroethylene	89	ND	D040	0.5		<<1000		<<<<<1000		<<<<<1000	
Vinyl Chloride	89	ND	D043	0.2		<<400		<<<<<400		<<<<<400	

Paint Waste Other

Analysis	Number of Samples	90 UCL for the 50th Percentile	Waste Code	Reg Limit	Santa Anna,CA	Salida,CA	Salida,CA	Omaha,NE	Omaha,NE	Fresno,CA	Fresno,CA
				Sample Number	C2K140285001R2	C2K140299001	C2K140299001R2	C2K220139001	C2K220139001R2	C2L060112001	C2L060112001R2
				Year	2002	2002	2002	2002	2002	2002	2002
BNA											
2,4,5-Trichlorophenol	90	ND	D041	400		<<<<<20		<<<20		<20	
2,4,6-Trichlorophenol	90	ND	D042	2		<<<<<20		<<<20		<20	
2,4-Dinitrotoluene	90	ND	D030	0.13		<<<<<20		<<<20		<20	
2-Methylphenol	90	ND	D023	200		<<<<<20		<<<20		<20	
3+4-Methylphenol	90	ND	D024/25	200		<<<<<20		<<<20		<20	
Hexachlorobenzene	90	ND	D032	0.13		<<<<<20		<<<20		<20	
Hexachlorobutadiene	90	ND	D033	0.5		<<<<<20		<<<20		<20	
Hexachloroethane	90	ND	D034	3		<<<<<20		<<<20		<20	
Nitrobenzene	90	ND	D036	2		<<<<<20		<<<20		<20	
Pentachlorophenol	90	ND	D037	100		<<<<<600		<<<600		<600	
Pyridine	90	ND	D038	5		<<<<<20		<<<20		**34**	
METALS											
Arsenic	90	ND	D004	5		<<<<<1		<<<1		<1	
Barium	90	ND	D005	100		<<<<<20		**159**		<20	
Cadmium	90	ND	D006	1		<<<<<0.5		<<<0.5		<0.5	
Chromium	90	1.6	D007	5		**6.7**		1.6		1.6	
Lead	90	ND	D008	5		1.6		**6.3**		**6.7**	
Mercury	89	ND	D009	0.2		<<<<<0.033		<<<0.033		<0.033	
Selenium	90	ND	D010	1		**1.4**		**1.1**		<0.5	
Silver	90	ND	D011	5		<<<<<0.5		<<<0.5		<0.5	
Misc											
Flash Point	88	69	D001	140		**67.8**		**67.8**		**67.4**	
pH	92	6.25	D002	2-12.5		8		7.8		7.2	
VOA											
1,1-Dichloroethylene	89	ND	D029	0.7	<<<<<1000		<<<<<1000		<<<1000		<1000
1,2-Dichloroethane	89	ND	D028	0.5	<<<<<1000		<<<<<1000		<<<1000		<1000
1,4-Dichlorobenzene	89	ND	D027	7.5	<<<<<4000		<<<<<4000		<<<4000		<4000
Benzene	89	69	D018	0.5	<<<<<1000		<<<<<1000		<<<1000		<1000
Carbon Tetrachloride	89	ND	D019	0.5	<<<<<1000		<<<<<1000		<<<1000		<1000
Chlorobenzene	89	1.8	D021	100	<<<<<1000		<<<<<1000		<<<1000		<1000
Chloroform	89	ND	D022	6	<<<<<4000		<<<<<4000		<<<4000		<4000
Methyl Ethyl Ketone	89	25000	D035	200	**27000**		**99000**		**83000**		**77000**
Tetrachloroethylene	89	ND	D039	0.7	<<<<<1000		<<<<<1000		<<<1000		<1000
Trichloroethylene	89	ND	D040	0.5	<<<<<1000		<<<<<1000		<<<1000		<1000
Vinyl Chloride	89	ND	D043	0.2	<<<<<400		<<<<<400		<<<400		<400

PWS 105 and 150

Analysis	Number of Samples	90 UCL for the 50th Percentile	Waste Code	Reg Limit	Blaine,MN	Blaine,MN	Salt Lake City,UT	Blaine,MN	Blaine,MN	Eagan,MN	Ashland,KY	Reedley,CA	Fresno,CA
				Sample Number	2024844	2024861	2035145	2042518	2042576	2042585	2057300	2059482	2067245
				Year	2000	2000	2000	2000	2000	2000	2000	2000	2000
BNA													
2,4,5-Trichlorophenol	46	ND	D041	400	<5.0	<5.0	<5.0	<5.0	<5.0	<5.0	<5.0	<5.0	<200
2,4,6-Trichlorophenol	46	ND	D042	2	<2.0	<2.0	<2.0	<2.0	<2.0	<2.0	<2.0	<2.0	<200
2,4-Dinitrotoluene	46	ND	D030	0.13	<0.13	<0.13	<0.13	<0.13	<0.13	<0.13	<0.13	<0.13	<40
2-Methylphenol	46	ND	D023	200	<5.0	<5.0	<5.0	7.65	<5.0	<5.0	<5.0	<5.0	<200
3+4-Methylphenol	46	ND	D024/25	200	<5.0	<5.0	<5.0	5.73	<5.0	<5.0	<5.0	<5.0	<200
Hexachlorobenzene	46	ND	D032	0.13	0.064636	0.064502	<0.025	<0.025	<0.025	<0.025	<0.025	<0.025	<40
Hexachlorobutadiene	46	ND	D033	0.5	<0.10	<0.10	<0.10	<0.10	<0.10	<0.10	<0.10	<0.10	<200
Hexachloroethane	46	ND	D034	3	<1.0	<1.0	<1.0	<1.0	<1.0	<1.0	<1.0	<1.0	<200
Nitrobenzene	46	ND	D036	2	<0.40	<0.40	<0.40	<0.40	<0.40	<0.40	<0.40	<0.40	<200
Pentachlorophenol	46	ND	D037	100	<5.0	<5.0	<5.0	<5.0	<5.0	<5.0	<5.0	<5.0	<200
Pyridine	46	ND	D038	5	<1.0	<1.0	<1.0	<1.0	<1.0	<1.0	<1.0	<1.0	<210
METALS													
Arsenic	46	ND	D004	5	<5.00	<5.00	<5.00	<5.00	<5.00	<5.00	<5.00	<5.00	<5.00
Barium	46	ND	D005	100	0.867	1.48	1.19	1.28	1.15	1.29	1.03	1.31	<0.500
Cadmium	46	ND	D006	1	<0.500	<0.500	<0.500	<0.500	<0.500	<0.500	<0.500	<0.500	<0.500
Chromium	46	ND	D007	5	<0.500	<0.500	<0.500	<0.500	<0.500	<0.500	<0.500	<0.500	<0.500
Lead	46	3.4	D008	5	<4.00	4.66	<4.00	**12.2**	**12.5**	<4.00	<4.00	<4.00	**17.4**
Mercury	46	ND	D009	0.2	<0.10	<0.10	<0.100	<0.10	<0.10	<0.10	<0.10	<0.10	<0.10
Selenium	46	ND	D010	1	<0.45	<0.45	<0.45	<0.45	<0.45	<0.45	<0.45	<0.45	<0.45
Silver	46	ND	D011	5	<0.500	<0.500	<0.500	<0.500	<0.500	<0.500	<0.500	<0.500	<0.500
Misc													
Flash Point	46	144	D001	140	**118**	**122**	146	146	**135**	145	**92**	152	160
pH	51	7.10	D002	2-12.5	6.42	7.01	7.25	7.78	6.87	6.69	7.17	6.9	6.91
VOA													
1,1-Dichloroethylene	46	ND	D029	0.7	<4.0	<4.0	<0.40	<0.80	<0.80	<4.0	<0.40	<0.80	<0.80
1,2-Dichloroethane	46	ND	D028	0.5	<2.0	<2.0	<0.20	<0.40	<0.40	<2.0	<0.20	<0.40	<0.40
1,4-Dichlorobenzene	46	3	D027	7.5	<5.0	<5.0	1.9	**33.7**	**161**	<5.0	1.7	4.5	<1.0
Benzene	46	4.4	D018	0.5	**2.8**	**2.9**	**41.2**	**2.6**	**2.4**	**3.2**	**4.9**	**4.7**	**1.3**
Carbon Tetrachloride	46	ND	D019	0.5	<2.0	<2.0	<0.20	<0.40	<0.40	<2.0	<0.20	<0.40	<0.40
Chlorobenzene	46	ND	D021	100	<2.0	<2.0	<0.20	8.1	47.1	<2.0	<0.20	<0.40	<0.40
Chloroform	46	ND	D022	6	<2.0	<2.0	<0.20	<0.40	<0.40	<2.0	<0.20	<0.40	<0.40
Methyl Ethyl Ketone	46	7.2	D035	200	8	6.4	<0.50	7.7	5.4	24.3	2	8.6	<1.0
Tetrachloroethylene	46	1130	D039	0.7	**1770**	**1470**	**1190**	**1850**	**1890**	**887**	**953**	**2040**	**815**
Trichloroethylene	46	35.8	D040	0.5	**57.6**	**49**	**6.7**	**28.6**	**34.3**	**58.6**	**43.7**	**16.7**	**19.4**
Vinyl Chloride	46	ND	D043	0.2	<1.5	<1.5	<0.15	<0.30	<0.30	<1.5	<0.15	<0.30	<0.30

PWS 105 and 150

				Sample Number	2075099	2076552	2076554	2079301	2082499	2083428	2087153	2088692	2089538
				Year	2001	2001	2001	2001	2001	2001	2001	2001	2001
Analysis	Number of Samples	90 UCL for the 50th Percentile	Waste Code	Reg Limit	Gering,NE	Eagan,MN	Eagan,MN	Omaha,NE	Grand Island,NE	Garden City,GA	Fresno,CA	Los Angeles,CA	Salida,CA
BNA													
2,4,5-Trichlorophenol	46	ND	D041	400	<5.0	<200	<200	<5.0	<5.0	<5.0	<5.0	<300	<5.0
2,4,6-Trichlorophenol	46	ND	D042	2	<2.0	<200	<200	<2.0	<2.0	<2.0	<2.0	<300	<2.0
2,4-Dinitrotoluene	46	ND	D030	0.13	<0.13	<40	<40	<0.13	<0.13	<0.13	<0.13	<40	<0.13
2-Methylphenol	46	ND	D023	200	<5.0	<200	<200	5.42	<5.0	<5.0	<5.0	<400	<5.0
3+4-Methylphenol	46	ND	D024/25	200	<5.0	<200	<200	<5.0	<5.0	<5.0	<5.0	<500	<5.0
Hexachlorobenzene	46	ND	D032	0.13	0.028925	<40	<40	<0.025	<0.025	<0.025	<0.025	<40	<0.025
Hexachlorobutadiene	46	ND	D033	0.5	<0.10	<200	<200	<0.10	<0.10	<0.10	<0.10	<200	<0.10
Hexachloroethane	46	ND	D034	3	<1.0	<200	<200	<1.0	<1.0	<1.0	<1.0	<200	<1.0
Nitrobenzene	46	ND	D036	2	<0.40	<200	<200	<0.40	<0.40	<0.40	<0.40	<200	<0.40
Pentachlorophenol	46	ND	D037	100	<5.0	<200	<200	<5.0	<5.0	<5.0	<5.0	<520	<5.0
Pyridine	46	ND	D038	5	<1.0	<210	<210	<1.0	<1.0	<1.0	<1.0	<580	<1.0
METALS													
Arsenic	46	ND	D004	5	<5.00	<5.00	<5.00	<5.00	<5.00	<5.00	<5.00	<5.00	<5.00
Barium	46	ND	D005	100	2.45	1.21	1.20	1.49	0.774	<0.500	<0.500	<0.500	0.762
Cadmium	46	ND	D006	1	<0.500	<0.500	<0.500	<0.500	0.512	<0.500	<0.500	<0.500	<0.500
Chromium	46	ND	D007	5	<0.500	<0.500	<0.500	<0.500	0.501	<0.500	<0.500	<0.500	<0.500
Lead	46	3.4	D008	5	4.04	<4.00	**5.34**	<4.00	**7.71**	<4.00	<4.00	<4.00	<4.00
Mercury	46	ND	D009	0.2	<0.100	<0.10	<0.100	<0.10	<0.10	<0.10	<0.10	<0.10	<0.10
Selenium	46	ND	D010	1	<0.45	<0.45	<0.45	<0.45	<0.45	<0.45	<0.45	<0.45	<0.45
Silver	46	ND	D011	5	<0.500	<0.500	<0.500	<0.500	<0.500	<0.500	<0.500	<0.500	<0.500
Misc													
Flash Point	46	144	D001	140	**136**	142	147	144	**138**	145	152	152	151
pH	51	7.10	D002	2-12.5	7.19	6.88	6.71	5.28	7.27	6.24	5.39	6.87	5.76
VOA													
1,1-Dichloroethylene	46	ND	D029	0.7	<2.0	<1.6	<1.6	<2.0	<0.40	<1.6	<1.6	<2.0	<4.0
1,2-Dichloroethane	46	ND	D028	0.5	<1.0	<0.80	<0.80	<1.0	<0.20	<0.80	<0.80	<1.0	<2.0
1,4-Dichlorobenzene	46	3	D027	7.5	**8**	3.7	3.4	4.9	4.5	<2.0	3.1	<2.5	<5.0
Benzene	46	4.4	D018	0.5	**2.2**	**2**	**2.4**	**3.9**	**4.4**	**3.2**	<0.80	**3.5**	**3.8**
Carbon Tetrachloride	46	ND	D019	0.5	<1.0	<0.80	<0.80	<1.0	<0.20	<0.80	<0.80	<1.0	<2.0
Chlorobenzene	46	ND	D021	100	<1.0	<0.80	<0.80	<1.0	<0.20	<0.80	<0.80	<1.0	<2.0
Chloroform	46	ND	D022	6	<1.0	<0.80	<0.80	<1.0	<0.20	<0.80	<0.80	<1.0	<2.0
Methyl Ethyl Ketone	46	7.2	D035	200	<2.5	3.4	5.7	5.7	<0.50	<2.0	<2.0	124	53.1
Tetrachloroethylene	46	1130	D039	0.7	**3280**	**691**	**745**	**1270**	**1070**	**1370**	**1060**	**1470**	**1130**
Trichloroethylene	46	35.8	D040	0.5	**11.6**	**51.4**	**60.2**	**124**	**16.6**	**28.1**	**11**	**35.8**	**30.6**
Vinyl Chloride	46	ND	D043	0.2	<0.75	<0.60	<0.60	<0.75	<0.15	<0.60	<0.60	<0.75	<1.5

PWS 105 and 150

Analysis	Number of Samples	90 UCL for the 50th Percentile	Waste Code	Reg Limit	Santa Anna,CA	Sacramento,CA	Oakland,CA	Archdale,NC	High Point,NC	Reedley,CA	Avon,NY	Oakland,CA
				Sample Number	2089559	2091972	2094182	2094452	2094452	2095479	2097353	2123638
				Year	2001	2001	2001	2001	2001	2001	2001	2001
BNA												
2,4,5-Trichlorophenol	46	ND	D041	400	<5.0	<5.0	<5.0	<0.15	<0.15	<5.0	<5.0	<25
2,4,6-Trichlorophenol	46	ND	D042	2	<2.0	<2.0	<2.0	<0.15	<0.15	<2.0	<2.0	<10.0
2,4-Dinitrotoluene	46	ND	D030	0.13	<0.13	<0.13	<0.13	<0.020	<0.020	<0.13	<0.13	<0.65
2-Methylphenol	46	ND	D023	200	<5.0	<5.0	<5.0	<10.0	<10.0	<5.0	<5.0	<25
3+4-Methylphenol	46	ND	D024/25	200	<5.0	<5.0	<5.0	<10.0	<10.0	<5.0	<5.0	<25
Hexachlorobenzene	46	ND	D032	0.13	<0.025	<0.025	<0.025	<0.020	<0.020	<0.025	<0.025	<0.025
Hexachlorobutadiene	46	ND	D033	0.5	<0.10	<0.10	<0.10	<0.10	<0.10	<0.10	<0.10	<0.10
Hexachloroethane	46	ND	D034	3	<1.0	<1.0	<1.0	<0.10	<0.10	<1.0	<1.0	<1.0
Nitrobenzene	46	ND	D036	2	<0.40	<0.40	<0.40	<0.10	<0.10	<0.40	<0.40	<2.0
Pentachlorophenol	46	ND	D037	100	<5.0	<5.0	<5.0	<0.26	<0.26	<5.0	<5.0	<25
Pyridine	46	ND	D038	5	<1.0	<1.0	<1.0	<0.25	<0.25	<1.0	<1.0	<5.0
METALS												
Arsenic	46	ND	D004	5	<5.00	<5.00	<5.00	<0.500	<0.500	<5.00	<5.00	<5.00
Barium	46	ND	D005	100	<0.500	0.678	1.34	3.58	3.58	1.26	1.39	0.789
Cadmium	46	ND	D006	1	<0.500	<0.500	**2.56**	**3.06**	**3.06**	<0.500	<0.500	<0.500
Chromium	46	ND	D007	5	<0.500	<0.500	<0.500	0.147	0.147	<0.500	<0.500	<0.500
Lead	46	3.4	D008	5	<4.00	**9.19**	**6.86**	**123**	**123**	<4.00	<4.00	<4.00
Mercury	46	ND	D009	0.2	<0.10	<0.10	<0.10	<0.0008	<0.0008	<0.10	<0.10	<0.10
Selenium	46	ND	D010	1	<0.45	<0.45	<0.45	<0.750	<0.750	<0.45	<0.45	<0.45
Silver	46	ND	D011	5	<0.500	<0.500	<0.500	<0.050	<0.050	<0.500	<0.500	<0.500
Misc												
Flash Point	46	144	D001	140	148	158	152	**138**	**138**	151	145	144
pH	51	7.10	D002	2-12.5	7.91	8.02	5.33	7.77	7.77	6.58	7.20	7.56
VOA												
1,1-Dichloroethylene	46	ND	D029	0.7	<0.80	<0.80	<1.6	<0.20	<0.20	<0.80	<0.80	<0.40
1,2-Dichloroethane	46	ND	D028	0.5	<0.40	<0.40	<0.80	<0.20	<0.20	<0.40	<0.40	<0.20
1,4-Dichlorobenzene	46	3	D027	7.5	1.3	<1.0	<2.0	<0.20	<0.20	<1.0	3.3	<0.50
Benzene	46	4.4	D018	0.5	**7.7**	<0.40	**3.4**	<0.20	<0.20	**7**	**1.9**	**11.3**
Carbon Tetrachloride	46	ND	D019	0.5	<0.40	<0.40	<0.80	<0.20	<0.20	<0.40	<0.40	<0.20
Chlorobenzene	46	ND	D021	100	<0.40	<0.40	<0.80	<0.20	<0.20	<0.40	<0.40	<0.20
Chloroform	46	ND	D022	6	<0.40	<0.40	<0.80	<0.20	<0.20	<0.40	<0.40	<0.20
Methyl Ethyl Ketone	46	7.2	D035	200	**226**	2.4	60	0.64	0.64	34.6	51.7	3.1
Tetrachloroethylene	46	1130	D039	0.7	**1120**	**3100**	**1720**	**1.135**	**1.135**	**1130**	**906**	**1930**
Trichloroethylene	46	35.8	D040	0.5	**69**	**1**	**8.8**	<0.20	<0.20	**66.6**	**33.7**	**18.9**
Vinyl Chloride	46	ND	D043	0.2	<0.30	<0.30	<0.60	<0.14	<0.14	<0.30	<0.30	<0.15

PWS 105 and 150

Analysis	Number of Samples	90 UCL for the 50th Percentile	Waste Code	Reg Limit	Blaine,MN	Grand Junction,CO	Denton,TX	Denton,TX	Salt Lake City,UT	Fresno,CA	Los Angeles,CA	Santa Anna,CA
				Sample Number	2132316	2133102	2134287	2134319	2139791	2139803	2139836	2142967
				Year	2002	2002	2002	2002	2002	2002	2002	2002
BNA												
2,4,5-Trichlorophenol	46	ND	D041	400	<5.0	<5.0	<5.0	<5.0	<5.0	<5.0	<2.672	<0.15
2,4,6-Trichlorophenol	46	ND	D042	2	<2.0	<2.0	<2.0	<2.0	<2.0	<2.0	<1.112	<0.15
2,4-Dinitrotoluene	46	ND	D030	0.13	<0.13	<0.13	<0.13	<0.13	<0.13	<0.13	<0.0772	<0.020
2-Methylphenol	46	ND	D023	200	<5.0	<5.0	<5.0	<5.0	<5.0	<5.0	<7.4	<10.0
3+4-Methylphenol	46	ND	D024/25	200	<5.0	6.46	<5.0	<5.0	<5.0	6.72	<7.4	<10.0
Hexachlorobenzene	46	ND	D032	0.13	<0.025	<0.025	<0.025	<0.025	<0.025	<0.025	<0.0226	<0.020
Hexachlorobutadiene	46	ND	D033	0.5	<0.10	<0.10	<0.10	<0.10	<0.10	<0.10	<0.076	<0.10
Hexachloroethane	46	ND	D034	3	<1.0	<1.0	<1.0	<1.0	<1.0	<1.0	<0.568	<0.10
Nitrobenzene	46	ND	D036	2	<0.40	<0.40	<0.40	<0.40	<0.40	<0.40	<0.256	<0.10
Pentachlorophenol	46	ND	D037	100	<5.0	<5.0	<5.0	<5.0	<5.0	<5.0	<2.7248	<0.26
Pyridine	46	ND	D038	5	<1.0	<1.0	<1.0	<1.0	<1.0	<1.0	<0.64	<0.25
METALS												
Arsenic	46	ND	D004	5	<5.00	<5.00	<5.00	<5.00	<5.00	<5.00	<2.84	<0.500
Barium	46	ND	D005	100	0.995	<5.00	<5.00	<5.00	<5.00	<5.00	3.099	1.40
Cadmium	46	ND	D006	1	<0.500	<0.500	<0.500	0.532	<0.500	<0.500	<0.284	0.066
Chromium	46	ND	D007	5	<0.500	<0.500	<0.500	<0.500	<0.500	<0.500	0.323	<0.050
Lead	46	3.4	D008	5	**6.15**	<4.00	<4.00	<4.00	<4.00	<4.00	<2.272	<0.400
Mercury	46	ND	D009	0.2	<0.10	<0.10	<0.040	<0.040	<0.040	<0.040	<0.021184	<0.0008
Selenium	46	ND	D010	1	<0.45	<0.45	<0.45	<0.45	<0.45	<0.45	<0.594	<0.750
Silver	46	ND	D011	5	<0.500	<0.500	<0.500	<0.500	<0.500	<0.500	<0.284	<0.050
Misc												
Flash Point	46	144	D001	140	142	150	150	152	153	145	**128**	168
pH	51	7.10	D002	2-12.5	7.62	7.10	8.41	6.77	4.49	5.57	6.40	5.59
VOA												
1,1-Dichloroethylene	46	ND	D029	0.7	<0.40	<0.40	<0.40	<0.40	<0.40	<0.40	<0.236	<0.20
1,2-Dichloroethane	46	ND	D028	0.5	<0.20	<0.20	<0.20	<0.20	<0.20	<0.20	<0.2	<0.20
1,4-Dichlorobenzene	46	3	D027	7.5	2.3	0.82	<0.50	<0.50	<0.50	0.84	<0.254	<0.20
Benzene	46	4.4	D018	0.5	**3.2**	**6**	**3.7**	**3.6**	**2.3**	**7.3**	<0.2	<0.20
Carbon Tetrachloride	46	ND	D019	0.5	<0.20	<0.20	<0.20	<0.20	<0.20	<0.20	<0.2	<0.20
Chlorobenzene	46	ND	D021	100	<0.20	<0.20	<0.20	<0.20	<0.20	<0.20	<0.2	<0.20
Chloroform	46	ND	D022	6	<0.20	<0.20	<0.20	<0.20	<0.20	<0.20	<0.2	<0.20
Methyl Ethyl Ketone	46	7.2	D035	200	6.4	4.1	10	173	2.1	19.9	<0.91	<1.0
Tetrachloroethylene	46	1130	D039	0.7	**1190**	**1100**	**798**	**728**	**357**	**1530**	**34.83**	<0.20
Trichloroethylene	46	35.8	D040	0.5	**43.3**	**71.6**	**48.7**	**60.7**	**14**	**75.7**	0.27	<0.20
Vinyl Chloride	46	ND	D043	0.2	<0.15	<0.15	<0.15	<0.15	<0.15	<0.15	<0.1418	<0.14

PWS 105 and 150

				Sample Number	2145213	C2I230202001	C2I230202001R2	C2I230203001	C2I250316001	C2I250316001R2	C2J150213001
				Year	2002	2002	2002	2002	2002	2002	2002
Analysis	Number of Samples	90 UCL for the 50th Percentile	Waste Code	Reg Limit	Rohnert Park,CA	Blaine,MN	Blaine,MN	Blaine,MN	Boise,ID	Boise,ID	Avon,NY
BNA											
2,4,5-Trichlorophenol	46	ND	D041	400	<5.0	0.18		0.21	0.25		0.13
2,4,6-Trichlorophenol	46	ND	D042	2	<2.0	<<<<<<0.05		0.081	<<<<<<0.05		0.058
2,4-Dinitrotoluene	46	ND	D030	0.13	<0.13	<<<<<<0.05		<<<<<<0.05	<<<<<<0.05		<<<<<<0.05
2-Methylphenol	46	ND	D023	200	<5.0	2.3		2.8	1.9		2.9
3+4-Methylphenol	46	ND	D024/25	200	<5.0	3		3.3	6.5		3.4
Hexachlorobenzene	46	ND	D032	0.13	<0.025	<<<<<<0.025		<<<<<<0.025	<<<<<<0.025		<<<<<<0.025
Hexachlorobutadiene	46	ND	D033	0.5	<0.10	<<<<<<0.1		<<<<<<0.1	<<<<<<0.1		<<<<<<0.1
Hexachloroethane	46	ND	D034	3	<1.0	<<<<<<1		<<<<<<1	<<<<<<1		<<<<<<1
Nitrobenzene	46	ND	D036	2	<0.40	<<<<<<0.05		<<<<<<0.05	<<<<<<0.05		0.38
Pentachlorophenol	46	ND	D037	100	<5.0	<<<<<<3		<<<<<<3	<<<<<<3		<<<<<<3
Pyridine	46	ND	D038	5	<1.0	0.071		0.1	0.1		0.079
METALS											
Arsenic	46	ND	D004	5	<5.00	<<<<<<1		<<<<<<1	<<<<<<1		<<<<<<1
Barium	46	ND	D005	100	<5.00	<<<<<<20		<<<<<<20	<<<<<<20		<<<<<<20
Cadmium	46	ND	D006	1	<0.500	<<<<<<0.5		0.89	<<<<<<0.5		0.51
Chromium	46	ND	D007	5	<0.500	<<<<<<0.5		<<<<<<0.5	<<<<<<0.5		0.63
Lead	46	3.4	D008	5	<4.00	**8.8**		**9.1**	<<<<<<0.3		11
Mercury	46	ND	D009	0.2	<0.1	<<<<<<0.033		<<<<<<0.033	<<<<<<0.033		<<<<<<0.033
Selenium	46	ND	D010	1	<0.45	<<<<<<0.5		<<<<<<0.5	<<<<<<0.5		<<<<<<0.5
Silver	46	ND	D011	5	<0.500	<<<<<<0.5		<<<<<<0.5	<<<<<<0.5		<<<<<<0.5
Misc											
Flash Point	46	144	D001	140	111	145		141	165		140
pH	51	7.10	D002	2-12.5	6.85	7.8		7.4	6.8		7.2
VOA											
1,1-Dichloroethylene	46	ND	D029	0.7	<0.40	<<<<<<0.25		<<<<<<10	<<<<<<0.25		
1,2-Dichloroethane	46	ND	D028	0.5	<0.20	<<<<<<0.25		<<<<<<10	<<<<<<0.25		
1,4-Dichlorobenzene	46	3	D027	7.5	<0.50	5.4		<<<<<<10	0.74		
Benzene	46	4.4	D018	0.5	**36**	**6.3**		<<<<<<10	**4.8**		
Carbon Tetrachloride	46	ND	D019	0.5	<0.20	<<<<<<0.25		<<<<<<10	<<<<<<0.25		
Chlorobenzene	46	ND	D021	100	<0.20	<<<<<<0.25		<<<<<<10	<<<<<<0.25		
Chloroform	46	ND	D022	6	<0.20	<<<<<<1		<<<<<<40	<<<<<<1		
Methyl Ethyl Ketone	46	7.2	D035	200	9.7	1.5		<<<<<<10	7.2		
Tetrachloroethylene	46	1130	D039	0.7	**392**		**950**	**920**		**1500**	
Trichloroethylene	46	35.8	D040	0.5	**3.2**		**30**	**29**		**260**	
Vinyl Chloride	46	ND	D043	0.2	<0.15	<<<<<<0.1		<<<<<<4	<<<<<<0.1		

PWS 105 and 150

				Sample Number	C2J150213001R2	C2K010354001	C2K010354001R2	C2K080366001	C2K080366001R2	C2K130220001
				Year	2002	2002	2002	2002	2002	2002
Analysis	**Number of Samples**	**90 UCL for the 50th Percentile**	**Waste Code**	**Reg Limit**	Avon,NY	Fargo,ND	Fargo,ND	Lexington,KY	Lexington,KY	Sacramento,CA
BNA										
2,4,5-Trichlorophenol	46	ND	D041	400		<<<<<<0.05			<<<<<0.2	<<<<<0.05
2,4,6-Trichlorophenol	46	ND	D042	2		<<<<<<0.05			<<<<<0.2	<<<<<0.05
2,4-Dinitrotoluene	46	ND	D030	0.13		<<<<<<0.05			<<<<<0.2	<<<<<0.05
2-Methylphenol	46	ND	D023	200		2.2			0.71	0.23
3+4-Methylphenol	46	ND	D024/25	200		2.9			2.1	1.1
Hexachlorobenzene	46	ND	D032	0.13		<<<<<<0.025		<<<<<0.025		<<<<<0.025
Hexachlorobutadiene	46	ND	D033	0.5		<<<<<<0.1		<<<<<0.1		<<<<<0.1
Hexachloroethane	46	ND	D034	3		<<<<<<1		<<<<<1		<<<<<1
Nitrobenzene	46	ND	D036	2		<<<<<<0.05			0.43	<<<<<0.05
Pentachlorophenol	46	ND	D037	100		<<<<<<3			<<<<<12	<<<<<3
Pyridine	46	ND	D038	5		<<<<<<0.05			<<<<<0.2	<<<<<0.05
METALS										
Arsenic	46	ND	D004	5		<<<<<<1		<<<<<1		<<<<<1
Barium	46	ND	D005	100		<<<<<<20		<<<<<20		<<<<<20
Cadmium	46	ND	D006	1		<<<<<<0.5		<<<<<0.5		<<<<<0.5
Chromium	46	ND	D007	5		<<<<<<0.5		<<<<<0.5		<<<<<0.5
Lead	46	3.4	D008	5		2.4		4.5		0.43
Mercury	46	ND	D009	0.2		<<<<<<0.033		<<<<<0.033		<<<<<0.033
Selenium	46	ND	D010	1		<<<<<<0.5		<<<<<0.5		<<<<<0.5
Silver	46	ND	D011	5		<<<<<<0.5		<<<<<0.5		<<<<<0.5
Misc										
Flash Point	46	144	D001	140		158		143		154
pH	51	7.10	D002	2-12.5		5.5		7.2		8.6
VOA										
1,1-Dichloroethylene	46	ND	D029	0.7	<<<<<<12	<<<<<<0.5			<<<<<20	
1,2-Dichloroethane	46	ND	D028	0.5	<<<<<<12	<<<<<<0.5			<<<<<20	
1,4-Dichlorobenzene	46	3	D027	7.5	<<<<<<12	3			<<<<<20	
Benzene	46	4.4	D018	0.5	<<<<<<12	<<<<<<0.5			<<<<<20	
Carbon Tetrachloride	46	ND	D019	0.5	<<<<<<12	<<<<<<0.5			<<<<<20	
Chlorobenzene	46	ND	D021	100	<<<<<<12	<<<<<<0.5			<<<<<20	
Chloroform	46	ND	D022	6	<<<<<<50	<<<<<<2			<<<<<80	
Methyl Ethyl Ketone	46	7.2	D035	200	<<<<<<12	0.66			<<<<<20	
Tetrachloroethylene	46	1130	D039	0.7	**920**		**520**		**810**	
Trichloroethylene	46	35.8	D040	0.5	<<<<<<12		11		**49**	
Vinyl Chloride	46	ND	D043	0.2	<<<<<<5	<<<<<<0.2			<<<<<8	

PWS 105 and 150

				Sample Number	C2K130220001R2	C2K140297001	C2K200288001	C2K200288001R2	C2L030248001	C2L030248001R2	C2L110354001
				Year	2002	2002	2002	2002	2002	2002	2002
Analysis	Number of Samples	90 UCL for the 50th Percentile	Waste Code	Reg Limit	Sacramento,CA	Salida,CA	Gering,NE	Gering,NE	Omaha,NE	Omaha,NE	Gering,NE
BNA											
2,4,5-Trichlorophenol	46	ND	D041	400		<<<<<0.05	<<0.05		<0.05		<0.05
2,4,6-Trichlorophenol	46	ND	D042	2		<<<<<0.05	<<0.05		<0.05		<0.05
2,4-Dinitrotoluene	46	ND	D030	0.13		<<<<<0.05	<<0.05		<0.05		0.099
2-Methylphenol	46	ND	D023	200		0.69	0.61		0.71		5.7
3+4-Methylphenol	46	ND	D024/25	200		1.3	1.3		0.88		3.1
Hexachlorobenzene	46	ND	D032	0.13		<<<<<0.025	<<0.025		<0.025		<0.025
Hexachlorobutadiene	46	ND	D033	0.5		<<<<<0.1	<<0.1		<0.1		<0.1
Hexachloroethane	46	ND	D034	3		<<<<<1	<<1		<1		<1
Nitrobenzene	46	ND	D036	2		2	<<0.05		1.1		2
Pentachlorophenol	46	ND	D037	100		<<<<<3	<<3		<3		<3
Pyridine	46	ND	D038	5		<<<<<0.05	<<0.05		<0.05		<0.05
METALS											
Arsenic	46	ND	D004	5		<<<<<1	<<1		<1		<1
Barium	46	ND	D005	100		<<<<<20	<<20		<20		<20
Cadmium	46	ND	D006	1		0.81	<<0.5		0.51		<0.5
Chromium	46	ND	D007	5		0.55	<<0.5		<0.5		<0.5
Lead	46	3.4	D008	5		**19.2**	**5.5**		3.4		**5.1**
Mercury	46	ND	D009	0.2		<<<<<0.033	<<0.033		<0.033		<0.033
Selenium	46	ND	D010	1		<<<<<0.5	<<0.5		<0.5		<0.5
Silver	46	ND	D011	5		<<<<<0.5	<<0.5		<0.5		<0.5
Misc											
Flash Point	46	144	D001	140		**67.8**	**133**		**139**		145
pH	51	7.10	D002	2-12.5		10.3	5.8		9.3		8.6
VOA											
1,1-Dichloroethylene	46	ND	D029	0.7	<<<<<10	<<<<<0.5		<<5		<12	
1,2-Dichloroethane	46	ND	D028	0.5	<<<<<10	<<<<<0.5		<<5		<12	
1,4-Dichlorobenzene	46	3	D027	7.5	<<<<<10	<<<<<2		<<20		<50	
Benzene	46	4.4	D018	0.5	<<<<<10	<<<<<0.5		<<5		<12	
Carbon Tetrachloride	46	ND	D019	0.5	<<<<<10	<<<<<0.5		<<5		<12	
Chlorobenzene	46	ND	D021	100	<<<<<10	<<<<<0.5		<<5		<12	
Chloroform	46	ND	D022	6	<<<<<40	<<<<<2		<<20		<50	
Methyl Ethyl Ketone	46	7.2	D035	200	<<<<<10	2.9		<<20		<50	
Tetrachloroethylene	46	1130	D039	0.7	**1200**	**1.5**		**400**		**1400**	
Trichloroethylene	46	35.8	D040	0.5	**13**	<<<<<0.5		<<5		**120**	
Vinyl Chloride	46	ND	D043	0.2	<<<<<4	<<<<<0.2		<<2		<5	

PWS 105 and 150

Analysis	Number of Samples	90 UCL for the 50th Percentile	Waste Code	Reg Limit	Sample Number C2L110354001R2 / Year 2002 Gering,NE
BNA					
2,4,5-Trichlorophenol	46	ND	D041	400	
2,4,6-Trichlorophenol	46	ND	D042	2	
2,4-Dinitrotoluene	46	ND	D030	0.13	
2-Methylphenol	46	ND	D023	200	
3+4-Methylphenol	46	ND	D024/25	200	
Hexachlorobenzene	46	ND	D032	0.13	
Hexachlorobutadiene	46	ND	D033	0.5	
Hexachloroethane	46	ND	D034	3	
Nitrobenzene	46	ND	D036	2	
Pentachlorophenol	46	ND	D037	100	
Pyridine	46	ND	D038	5	
METALS					
Arsenic	46	ND	D004	5	
Barium	46	ND	D005	100	
Cadmium	46	ND	D006	1	
Chromium	46	ND	D007	5	
Lead	46	3.4	D008	5	
Mercury	46	ND	D009	0.2	
Selenium	46	ND	D010	1	
Silver	46	ND	D011	5	
Misc					
Flash Point	46	144	D001	140	
pH	51	7.10	D002	2-12.5	
VOA					
1,1-Dichloroethylene	46	ND	D029	0.7	<10
1,2-Dichloroethane	46	ND	D028	0.5	<10
1,4-Dichlorobenzene	46	3	D027	7.5	<40
Benzene	46	4.4	D018	0.5	<10
Carbon Tetrachloride	46	ND	D019	0.5	<10
Chlorobenzene	46	ND	D021	100	<10
Chloroform	46	ND	D022	6	<40
Methyl Ethyl Ketone	46	7.2	D035	200	<40
Tetrachloroethylene	46	1130	D039	0.7	**1100**
Trichloroethylene	46	35.8	D040	0.5	**46**
Vinyl Chloride	46	ND	D043	0.2	<4

PWS 105

Analysis	Number of Samples	90 UCL for the 50th Percentile	Waste Code	Reg Limit	Denton,TX	Gering,NE	Fargo,ND	Fargo,ND	Albuquerque,NM	Omaha,NE	Eagan,MN	Sioux Falls,SD	Eagan,MN
				Sample Number	2009203	2011431	2015033	2015436	2015441	2015462	2016048	2016049	2016050
				Year	2000	2000	2000	2000	2000	2000	2000	2000	2000
BNA													
2,4,5-Trichlorophenol	157	ND	D041	400	<5.0	<5.0	<5.0	<5.0	<5.0	<5.0	<5.0	<5.0	<5.0
2,4,6-Trichlorophenol	157	ND	D042	2	<2.0	<2.0	<2.0	<2.0	<2.0	<2.0	<2.0	<2.0	<2.0
2,4-Dinitrotoluene	157	ND	D030	0.13	<0.13	<0.13	<0.13	<0.13	<0.13	<0.60	<0.13	<0.13	<0.13
2-Methylphenol	157	ND	D023	200	<5.0	13.5	<6.0	<5.0	<5.0	<5.0	<5.0	<16	5.68
3+4-Methylphenol	157	ND	D024/25	200	<5.0	14.5	9.77	<5.0	<5.0	6.95	<5.0	7.24	<5.0
Hexachlorobenzene	157	ND	D032	0.13	<0.0050	<0.0050	<0.0050	<0.0050	<0.0050	<0.0050	<0.025	<0.0050	<0.025
Hexachlorobutadiene	158	ND	D033	0.5	<0.020	<0.020	<0.020	<0.020	<0.020	<0.020	<0.020	<0.020	<0.020
Hexachloroethane	158	ND	D034	3	<0.20	<0.20	<0.20	<0.20	<0.20	<0.20	<0.20	<0.20	<0.20
Nitrobenzene	157	ND	D036	2	<0.40	<0.40	<0.40	<0.40	<0.40	<0.40	<0.4	<0.40	<0.4
Pentachlorophenol	157	ND	D037	100	<5.0	<5.0	<5.0	<5.0	<5.0	<5.0	<5.0	<5.0	<5.0
Pyridine	157	ND	D038	5	<1.0	<1.0	<1.0	<1.0	<1.0	<1.0	<1.0	<1.0	<1.0
METALS													
Arsenic	158	ND	D004	5	<5.00	<5.00	<5.00	<5.00	<5.00	<5.00	<5.00	<5.00	<5.00
Barium	158	2.42	D005	100	<0.500	<0.500	70.3	1.32	24.3	<0.500	1.27	1.87	1.30
Cadmium	158	ND	D006	1	<0.500	<0.500	**3.04**	<0.500	<0.500	<0.500	<0.500	0.627	<0.500
Chromium	158	ND	D007	5	<0.500	<0.500	**5.22**	<0.500	<0.500	<0.500	<0.500	<0.500	<0.500
Lead	158	ND	D008	5	<4.00	<4.00	**31.4**	<4.00	<4.00	<4.00	**5.38**	<4.00	**5.81**
Mercury	158	ND	D009	0.2	<0.10	<0.10	<0.10	<0.040	<0.040	<0.040	<0.10	<0.10	<0.100
Selenium	158	ND	D010	1	<0.45	<0.45	<0.45	<0.008	<0.008	<0.008	<0.45	<0.45	<0.45
Silver	158	ND	D011	5	<0.500	<0.500	<0.500	<0.500	<0.500	<0.500	<0.500	<0.500	<0.500
Misc													
Flash Point	157	138	D001	140	146	**136**	142	**130**	161	**137**	142	**139**	142
pH	161	7.2	D002	2-12.5	6.1	10.16	7.4	7.4	6.3	6.1	7.2	7.0	7.0
VOA													
1,1-Dichloroethylene	158	ND	D029	0.7	<4.0	<4.0	<40	<4.0	<0.40	<4.0	<4.0	<4.0	<4.0
1,2-Dichloroethane	158	ND	D028	0.5	<2.0	<2.0	<20	<2.0	<0.20	<2.0	<2.0	<2.0	<2.0
1,4-Dichlorobenzene	158	ND	D027	7.5	<5.0	**10.4**	<50	<5.0	0.74	<5.0	<5.0	6.4	<5.0
Benzene	158	ND	D018	0.5	**9.9**	**2.2**	<20	**3.7**	0.28	**2.4**	**2.6**	<2.0	**2.4**
Carbon Tetrachloride	158	ND	D019	0.5	<2.0	<2.0	<20	<2.0	<0.20	<2.0	<2.0	<2.0	<2.0
Chlorobenzene	158	ND	D021	100	<2.0	<2.0	<20	<2.0	<0.20	<2.0	<2.0	<2.0	<2.0
Chloroform	158	ND	D022	6	<2.0	<2.0	<20	<2.0	<0.20	<2.0	<2.0	<2.0	<2.0
Methyl Ethyl Ketone	158	ND	D035	200	6.7	<5.0	<50	6.2	<0.50	5.4	7.6	11.9	<5.0
Tetrachloroethylene	158	828	D039	0.7	**877**	**2430**	**46000**	**2410**	**40.6**	**974**	**894**	**532**	**847**
Trichloroethylene	158	14.4	D040	0.5	**117**	**78.5**	**54.2**	**59**	**0.71**	**45.8**	**86.1**	**19**	**95.2**
Vinyl Chloride	158	ND	D043	0.2	<1.5	<1.5	<15	<1.5	<0.15	<1.5	<1.5	<1.5	<1.5

PWS 105

Analysis	Number of Samples	90 UCL for the 50th Percentile	Waste Code	Reg Limit	Blaine,MN	Blaine,MN	Edwardsville,KS	Grand Island,NE	Wichita,KS	Garden City,GA	Longview,TX	Syracuse,NY
				Sample Number	2016264	2016269	2017367	2017645	2018176	2025720	2035230	2037675
				Year	2000	2000	2000	2000	2000	2000	2000	2000
BNA												
2,4,5-Trichlorophenol	157	ND	D041	400	<5.0		<5.0	<5.0	<5.0	<5.0	<5.0	<5.0
2,4,6-Trichlorophenol	157	ND	D042	2	<2.0		<2.0	<2.0	<2.0	<2.0	<2.0	<2.0
2,4-Dinitrotoluene	157	ND	D030	0.13	<0.13		<0.13	<0.13	<0.13	<0.13	<0.13	<0.13
2-Methylphenol	157	ND	D023	200	<5.0		<9.5	<5.0	<5.0	11	<5.0	6.89
3+4-Methylphenol	157	ND	D024/25	200	<5.0		<5.0	<5.0	<5.0	<5.0	<5.0	5.29
Hexachlorobenzene	157	ND	D032	0.13	**0.15903**	**0.16651**	<0.0050	<0.025	<0.0050	<0.025	<0.025	<0.025
Hexachlorobutadiene	158	ND	D033	0.5	<0.020	<0.020	<0.10	<0.020	<0.020	<0.10	<0.10	<0.10
Hexachloroethane	158	ND	D034	3	<0.20	<0.20	<0.20	<0.20	<0.20	<1.0	<1.0	<1.0
Nitrobenzene	157	ND	D036	2	<0.40		<0.40	<0.40	<0.40	<0.40	<0.40	<0.40
Pentachlorophenol	157	ND	D037	100	<5.0		<5.0	<5.0	<5.0	<5.0	<5.0	<5.0
Pyridine	157	ND	D038	5	<1.0		<1.0	<1.0	<1.0	<1.0	<1.0	<1.0
METALS												
Arsenic	158	ND	D004	5	<5.00	<5.00	<5.00	<5.00	<5.00	<5.00	<5.00	<5.00
Barium	158	2.42	D005	100	1.08	1.10	0.706	<0.500	<0.500	<0.500	4.61	1.4
Cadmium	158	ND	D006	1	<0.500	<0.500	<0.500	<0.500	0.646	<0.500	<0.500	<0.500
Chromium	158	ND	D007	5	<0.500	<0.500	<0.500	0.550	<0.500	0.53	<0.500	<0.500
Lead	158	ND	D008	5	**12.4**	**12.2**	**25.9**	<4.00	**7.45**	<4.00	**10.4**	<4.00
Mercury	158	ND	D009	0.2	<0.10	<0.040	<0.10	<0.10	<0.040	<0.040	<0.100	<0.10
Selenium	158	ND	D010	1	<0.45	<0.008	<0.45	<0.45	<0.008	<0.008	<0.45	<0.45
Silver	158	ND	D011	5	<0.500	<0.500	<0.500	<0.500	<0.500	<0.500	<0.500	<0.500
Misc												
Flash Point	157	138	D001	140	**122**	146	**137**	145	143	**112**	152	**130**
pH	161	7.2	D002	2-12.5	7.9	8.1	7.2	7.2	8.51	9.11	6.92	6.85
VOA												
1,1-Dichloroethylene	158	ND	D029	0.7	<4.0	<4.0	<4.0	<4.0	<4.0	<0.40	<0.40	<4.0
1,2-Dichloroethane	158	ND	D028	0.5	<2.0	<2.0	<2.0	<2.0	<2.0	<0.20	<0.20	<2.0
1,4-Dichlorobenzene	158	ND	D027	7.5	<5.0	<5.0	**9.8**	<5.0	<5.0	<0.50	0.99	<5.0
Benzene	158	ND	D018	0.5	<2.0	<2.0	<2.0	**2.2**	**3.8**	**96.7**	**3.8**	**2.3**
Carbon Tetrachloride	158	ND	D019	0.5	<2.0	<2.0	<2.0	<2.0	<2.0	<0.20	<0.20	<2.0
Chlorobenzene	158	ND	D021	100	<2.0	<2.0	<2.0	<2.0	<2.0	<0.20	<0.20	<2.0
Chloroform	158	ND	D022	6	<2.0	<2.0	<2.0	<2.0	<2.0	<0.20	<0.20	<2.0
Methyl Ethyl Ketone	158	ND	D035	200	<5.0	<5.0	<5.0	6.1	5	77.5	<0.50	<5.0
Tetrachloroethylene	158	828	D039	0.7	**1360**	**1330**	**820**	**917**	**430**	**1.1**	**735**	**1780**
Trichloroethylene	158	14.4	D040	0.5	**54.2**	**52.5**	**9.5**	**46.1**	**34.1**	<0.20	**17.8**	**16.8**
Vinyl Chloride	158	ND	D043	0.2	<1.5	<1.5	<1.5	<1.5	<1.5	<0.15	<0.15	<1.5

PWS 105

Analysis	Number of Samples	90 UCL for the 50th Percentile	Waste Code	Reg Limit	Pineville,LA	Salida,CA	Sioux Falls,SD	No_ Amityville,NY	St_ Charles,MO	Ashland,KY	Ashland,KY	Ashland,KY
				Sample Number	2039386	2039389	2042593	2044434	2045076	2046600	2046607	2046613
				Year	2000	2000	2000	2000	2000	2000	2000	2000
BNA												
2,4,5-Trichlorophenol	157	ND	D041	400	<5.0	<5.0	<5.0	<5.0	<5.0	<5.0	<5.0	<5.0
2,4,6-Trichlorophenol	157	ND	D042	2	<2.0	<2.0	<2.0	<2.0	<2.0	<2.0	<2.0	<2.0
2,4-Dinitrotoluene	157	ND	D030	0.13	<0.13	<0.13	<0.13	<0.13	<0.13	<0.13	<0.13	<0.13
2-Methylphenol	157	ND	D023	200	<5.0	<5.0	<5.0	8.59	8.74	<5.0	<5.0	<5.0
3+4-Methylphenol	157	ND	D024/25	200	<5.0	<5.0	<5.0	6.36	6.48	<5.0	<5.0	<5.0
Hexachlorobenzene	157	ND	D032	0.13	<0.025	<0.025	<0.025	<0.025	<0.025	<0.025	<0.025	<0.025
Hexachlorobutadiene	158	ND	D033	0.5	<0.10	<0.10	0.1377	<0.10	<0.10	<0.10	<0.10	<0.10
Hexachloroethane	158	ND	D034	3	<1.0	<1.0	<1.0	<1.0	<1.0	<1.0	2.0882	<1.0
Nitrobenzene	157	ND	D036	2	<0.40	<0.40	<0.40	<0.40	<0.40	<0.40	<0.40	<0.40
Pentachlorophenol	157	ND	D037	100	<5.0	<5.0	<5.0	<5.0	<5.0	<5.0	<5.0	<5.0
Pyridine	157	ND	D038	5	<1.0	<1.0	<1.0	<1.0	<1.0	<1.0	<1.0	<1.0
METALS												
Arsenic	158	ND	D004	5	<5.00	<5.00	<5.00	<5.00	<5.00	<5.00	<5.00	<5.00
Barium	158	2.42	D005	100	<0.500	2.31	2.55	<0.500	<0.500	7.78	1.54	<0.500
Cadmium	158	ND	D006	1	<0.500	<0.500	<0.500	<0.500	<0.500	<0.500	<0.500	<0.500
Chromium	158	ND	D007	5	<0.500	<0.500	<0.500	<0.500	<0.500	<0.500	<0.500	<0.500
Lead	158	ND	D008	5	<4.00	<4.00	<4.00	<4.00	<4.00	7.7	**9.2**	<4.00
Mercury	158	ND	D009	0.2	<0.10	<0.10	<0.100	<0.10	<0.10	<0.10	<0.10	<0.10
Selenium	158	ND	D010	1	<0.45	<0.45	<0.45	<0.45	<0.45	<0.45	<0.45	<0.45
Silver	158	ND	D011	5	<0.500	<0.500	<0.500	<0.500	<0.500	<0.500	<0.500	<0.500
Misc												
Flash Point	157	138	D001	140	141	151	128	148	142	135	152	125
pH	161	7.2	D002	2-12.5	5.46	7.44	7.17	6.25	7.7	7.7	7.82	7.69
VOA												
1,1-Dichloroethylene	158	ND	D029	0.7	<4.0	<4.0	<4.0	<4.0	<4.0	<4.0	<0.80	<0.80
1,2-Dichloroethane	158	ND	D028	0.5	<2.0	<2.0	<2.0	<2.0	<2.0	<2.0	<0.40	**2.4**
1,4-Dichlorobenzene	158	ND	D027	7.5	<5.0	<5.0	6.5	<5.0	<5.0	<5.0	3.1	1.2
Benzene	158	ND	D018	0.5	**6.6**	**13.8**	**20.9**	**2**	<2.0	**12.4**	<0.40	**106**
Carbon Tetrachloride	158	ND	D019	0.5	<2.0	<2.0	<2.0	<2.0	<2.0	<2.0	**1.1**	**3.7**
Chlorobenzene	158	ND	D021	100	<2.0	<2.0	<2.0	<2.0	<2.0	<2.0	<0.40	<0.40
Chloroform	158	ND	D022	6	<2.0	<2.0	<2.0	<2.0	<2.0	<2.0	<0.40	<0.40
Methyl Ethyl Ketone	158	ND	D035	200	78	<5.0	12.4	<5.0	<5.0	<5.0	<1.0	9
Tetrachloroethylene	158	828	D039	0.7	**836**	**284**	**38700**	**1310**	**1140**	**365**	**23100**	**5150**
Trichloroethylene	158	14.4	D040	0.5	**85.9**	<2.0	**5.7**	**23.4**	**35.5**	<2.0	**5.2**	**7320**
Vinyl Chloride	158	ND	D043	0.2	<1.5	<1.5	<1.5	<1.5	<1.5	<1.5	<0.30	<0.30

PWS 105

				Sample Number	2049653	2050529	2050719	2051064	2051094	2052339	2053035	2054245
				Year	2000	2000	2000	2000	2000	2000	2000	2000
Analysis	**Number of Samples**	**90 UCL for the 50th Percentile**	**Waste Code**	**Reg Limit**	Lexington,KY	Lackawanna,NY	Columbus,GA	Farmington,NM	Macon,GA	Lexington,KY	Greer,SC	Morrow,GA
BNA												
2,4,5-Trichlorophenol	157	ND	D041	400	<5.0	<5.0	<5.0	<5.0	<0.905	<5.0	<5.0	<200
2,4,6-Trichlorophenol	157	ND	D042	2	<2.0	<2.0	<2.0	<2.0	<0.635	<2.0	<2.0	<200
2,4-Dinitrotoluene	157	ND	D030	0.13	<0.13	<0.13	<0.13	<0.13	<0.1027	<0.13	<0.13	<40
2-Methylphenol	157	ND	D023	200	<5.0	12.2	<5.0	<5.0	<45.95	<5.0	<5.0	<200
3+4-Methylphenol	157	ND	D024/25	200	<5.0	12.2	<5.0	<5.0	<45.96	<5.0	<5.0	<200
Hexachlorobenzene	157	ND	D032	0.13	<0.025	<0.025	<0.025	<0.025		<0.025	<0.025	<40
Hexachlorobutadiene	158	ND	D033	0.5	<0.10	<0.10	<0.10	<0.10	<0.464	<0.10	<0.10	<200
Hexachloroethane	158	ND	D034	3	<1.0	<1.0	<1.0	<1.0	<0.545	<1.0	<1.0	<200
Nitrobenzene	157	ND	D036	2	<0.40	<0.40	<0.40	<0.40	<0.491	<0.40	<0.40	<200
Pentachlorophenol	157	ND	D037	100	<5.0	<5.0	<5.0	<5.0	<0.905	<5.0	<5.0	<200
Pyridine	157	ND	D038	5	<1.0	<1.0	<1.0	<1.0	<0.57685	<1.0	<1.0	<210
METALS												
Arsenic	158	ND	D004	5	<5.00	<5.00	<5.00	<5.00	<0.905	<5.00	<5.00	<5.00
Barium	158	2.42	D005	100	2.36	2.23	10.5	<0.500	17.438	<0.500	0.853	1.56
Cadmium	158	ND	D006	1	<0.500	<0.500	<0.500	<0.500	0.181	<0.500	<0.500	0.587
Chromium	158	ND	D007	5	<0.500	<0.500	<0.500	<0.500	0.325	<0.500	<0.500	<0.500
Lead	158	ND	D008	5	<4.00	<4.00	<4.00	<4.00	<0.724	<4.00	**11.4**	**9.16**
Mercury	158	ND	D009	0.2	<0.10	<0.10	<0.10	<0.10	0.011	<0.10	<0.100	<0.10
Selenium	158	ND	D010	1	<0.45	<0.45	<0.45	<0.45	<0.723	<0.45	<0.45	<0.45
Silver	158	ND	D011	5	<0.500	<0.500	<0.500	<0.500	<0.0905	<0.500	<0.500	<0.500
Misc												
Flash Point	157	138	D001	140	**138**	**136**	148	153	166	**130**	**130**	160
pH	161	7.2	D002	2-12.5	6.9	6.3	6.62	4.46	9.52	7.08	7.29	6.55
VOA												
1,1-Dichloroethylene	158	ND	D029	0.7	<0.80	<0.40	<0.40	<0.80	<0.242	<0.40	<0.40	<0.40
1,2-Dichloroethane	158	ND	D028	0.5	<0.40	<0.20	<0.20	<0.40	<0.214	<0.20	<0.20	<0.20
1,4-Dichlorobenzene	158	ND	D027	7.5	5.3	6.1	0.6	<1.0	<0.256	5	0.6	0.63
Benzene	158	ND	D018	0.5	<0.40	0.23	<0.20	**0.86**	<0.214	**76.3**	**98.2**	<0.20
Carbon Tetrachloride	158	ND	D019	0.5	<0.40	<0.20	<0.20	<0.40	<0.214	<0.20	<0.20	<0.20
Chlorobenzene	158	ND	D021	100	<0.40	<0.20	<0.20	<0.40	<0.214	<0.20	<0.20	<0.20
Chloroform	158	ND	D022	6	<0.40	1.1	<0.20	<0.40	<0.214	<0.20	<0.20	<0.20
Methyl Ethyl Ketone	158	ND	D035	200	<1.0	<0.50	0.66	1.8	<0.535	<0.50	5.4	<0.50
Tetrachloroethylene	158	828	D039	0.7	**1120**	**924**	**514**	**308**	**11.596**	**1110**	**1230**	**221**
Trichloroethylene	158	14.4	D040	0.5	**14.8**	**22.8**	**2.6**	**16.8**	0.227	**32.2**	**9.7**	<0.20
Vinyl Chloride	158	ND	D043	0.2	<0.30	<0.15	<0.15	<0.30	<0.1512	<0.15	<0.15	<0.15

PWS 105

Analysis	Number of Samples	90 UCL for the 50th Percentile	Waste Code	Reg Limit	Ashland,KY	Longview,TX	Omaha,NE	Gering,NE	Grand Island,NE	Salt Lake City,UT	Cohoes,NY	Lexington,KY
				Sample Number	2054691	2056648	2057701	2058154	2058274	2058620	2062345	2064580
				Year	2000	2000	2000	2000	2000	2000	2000	2000
BNA												
2,4,5-Trichlorophenol	157	ND	D041	400	<5.0	<5.0	<25	<5.0	<5.0	<5.0	<5.0	<5.0
2,4,6-Trichlorophenol	157	ND	D042	2	<2.0	<2.0	<10.0	<2.0	<2.0	<2.0	<2.0	<2.0
2,4-Dinitrotoluene	157	ND	D030	0.13	<0.13	<0.13	<0.65	<0.13	<0.13	<0.13	<0.13	<0.13
2-Methylphenol	157	ND	D023	200	<5.0	<5.0	<25	<5.0	<5.0	<5.0	6.64	<5.0
3+4-Methylphenol	157	ND	D024/25	200	<5.0	<5.0	<25	<5.0	<5.0	<5.0	5.04	<5.0
Hexachlorobenzene	157	ND	D032	0.13	<0.025	<0.025	<0.025	<0.025	<0.025	0.047759	<0.025	<0.025
Hexachlorobutadiene	158	ND	D033	0.5	<0.10	<0.10	<0.10	<0.10	<0.10	<0.10	<0.10	<0.10
Hexachloroethane	158	ND	D034	3	<1.0	<1.0	<1.0	<1.0	<1.0	<1.0	<1.0	<1.0
Nitrobenzene	157	ND	D036	2	<0.40	<0.40	<2.0	<0.40	<0.40	<0.40	<0.40	<0.40
Pentachlorophenol	157	ND	D037	100	<5.0	<5.0	<25	<5.0	<5.0	<5.0	<50	<50
Pyridine	157	ND	D038	5	<1.0	<1.0	<5.0	<1.0	<1.0	<1.0	<1.0	<1.0
METALS												
Arsenic	158	ND	D004	5	<5.00	<5.00	<5.00	<5.00	<5.00	<5.00	<5.00	<5.00
Barium	158	2.42	D005	100	8.06	0.927	1.03	0.941	1.21	0.870	2.07	0.946
Cadmium	158	ND	D006	1	0.52	<0.500	<0.500	<0.500	<0.500	<0.500	<0.500	<0.500
Chromium	158	ND	D007	5	<0.500	<0.500	<0.500	<0.500	<0.500	<0.500	<0.500	<0.500
Lead	158	ND	D008	5	**19**	**8.32**	<4.00	<4.00	<4.00	<4.00	<4.00	<4.00
Mercury	158	ND	D009	0.2	<0.10	<0.10	<0.100	<0.10	<0.10	<0.10	<0.10	<0.10
Selenium	158	ND	D010	1	<0.45	<0.45	<0.45	<0.45	<0.45	<0.45	<0.45	<0.45
Silver	158	ND	D011	5	<0.500	<0.500	<0.500	<0.500	<0.500	<0.500	<0.500	<0.500
Misc												
Flash Point	157	138	D001	140	152	160	**132**	146	148	158	141	150
pH	161	7.2	D002	2-12.5	7.46	6.35	6.95	7.79	7.23	8.11	7.05	7.20
VOA												
1,1-Dichloroethylene	158	ND	D029	0.7	<0.40	<0.40	<0.40	<0.80	<0.40	<0.80	<0.80	<0.80
1,2-Dichloroethane	158	ND	D028	0.5	<0.20	<0.20	<0.20	<0.40	<0.20	<0.40	<0.40	<0.40
1,4-Dichlorobenzene	158	ND	D027	7.5	3.5	<0.50	0.62	2.6	4.9	1.2	3.4	2.8
Benzene	158	ND	D018	0.5	<0.20	<0.20	**4.6**	**4.4**	0.48	**8.5**	0.4	**3**
Carbon Tetrachloride	158	ND	D019	0.5	<0.20	<0.20	<0.20	<0.40	<0.20	<0.40	<0.40	<0.40
Chlorobenzene	158	ND	D021	100	<0.20	<0.20	<0.20	<0.40	<0.20	<0.40	<0.40	<0.40
Chloroform	158	ND	D022	6	<0.20	<0.20	<0.20	<0.40	<0.20	<0.40	<0.40	<0.40
Methyl Ethyl Ketone	158	ND	D035	200	<0.50	<0.50	2.4	1.8	0.62	2.1	<1.0	9
Tetrachloroethylene	158	828	D039	0.7	**240**	**165**	**1510**	**828**	**477**	**984**	**213**	**773**
Trichloroethylene	158	14.4	D040	0.5	<0.20	**1.2**	**21.3**	**17.2**	**11.1**	**474**	**1.2**	**50.3**
Vinyl Chloride	158	ND	D043	0.2	<0.15	<0.15	<0.15	<0.30	<0.15	<0.30	<0.30	<0.30

PWS 105

				Sample Number	2064802	2066247	2066750	2066973	2066986	2067058	2067069	2067104
				Year	2000	2000	2000	2000	2000	2000	2000	2000
Analysis	**Number of Samples**	**90 UCL for the 50th Percentile**	**Waste Code**	**Reg Limit**	Dodge City,KS	El Monte,CA	Sacramento,CA	Los Angeles,CA	Highland,CA	Santa Anna,CA	Oakland,CA	Salida,CA
BNA												
2,4,5-Trichlorophenol	157	ND	D041	400	<5.0	<5.0	<5.0	<5.0	<10.0	<5.0	<10.0	<10.0
2,4,6-Trichlorophenol	157	ND	D042	2	<2.0	<2.0	<2.0	<2.0	<4.0	<2.0	<4.0	<4.0
2,4-Dinitrotoluene	157	ND	D030	0.13	<0.13	<0.13	<0.13	<0.13	<0.26	<0.13	<0.26	<0.26
2-Methylphenol	157	ND	D023	200	<5.0	<5.0	<5.0	<5.0	<10.0	<5.0	<10.0	<10.0
3+4-Methylphenol	157	ND	D024/25	200	<5.0	<5.0	<5.0	<5.0	<10.0	5.55	<10.0	<10.0
Hexachlorobenzene	157	ND	D032	0.13	<0.025	<0.025	<0.025	<0.025	<0.025	<0.025	<0.025	<0.025
Hexachlorobutadiene	158	ND	D033	0.5	<0.10	<0.10	<0.10	<0.10	<0.10	<0.10	<0.10	<0.10
Hexachloroethane	158	ND	D034	3	<1.0	<1.0	<1.0	<1.0	<1.0	<1.0	<1.0	<1.0
Nitrobenzene	157	ND	D036	2	<0.40	<0.40	<0.40	<0.40	<0.80	<0.40	<0.80	<0.80
Pentachlorophenol	157	ND	D037	100	<5.0	<5.0	<5.0	<5.0	<10.0	<5.0	<10.0	<10.0
Pyridine	157	ND	D038	5	<1.0	<1.0	<1.0	<1.0	<2.0	<1.0	<2.0	<2.0
METALS												
Arsenic	158	ND	D004	5	<5.00	<5.00	<0.500	<5.00	<5.00	<5.00	<5.00	<5.00
Barium	158	2.42	D005	100	0.768	<0.500	<0.050	<0.500	<0.500	0.787	2.42	3.73
Cadmium	158	ND	D006	1	<0.500	<0.500	0.098	<0.500	<0.500	<0.500	<0.500	<0.500
Chromium	158	ND	D007	5	<0.500	<0.500	<0.050	<0.500	<0.500	<0.500	<0.500	<0.500
Lead	158	ND	D008	5	<4.00	<4.00	<0.400	<4.00	<4.00	<4.00	**10.3**	<4.00
Mercury	158	ND	D009	0.2	<0.10	<0.10	<0.10	<0.10	<0.10	<0.10	<0.10	<0.10
Selenium	158	ND	D010	1	<0.45	<0.45	<0.45	<0.45	<0.45	<0.45	<0.45	<0.45
Silver	158	ND	D011	5	<0.500	<0.500	<0.050	<0.500	<0.500	<0.500	<0.500	<0.500
Misc												
Flash Point	157	138	D001	140	150	154	156	154	156	154	**69**	154
pH	161	7.2	D002	2-12.5	6.03	4.64	6.81	5.96	5.96	5.83	6.89	8.34
VOA												
1,1-Dichloroethylene	158	ND	D029	0.7	<0.80	<0.40	<0.80	<0.40	<0.80	<0.80	<0.80	<0.80
1,2-Dichloroethane	158	ND	D028	0.5	<0.40	<0.20	<0.40	<0.20	<0.40	<0.40	<0.40	<0.40
1,4-Dichlorobenzene	158	ND	D027	7.5	<1.0	2	1.4	2.4	1.7	1.5	<1.0	1.4
Benzene	158	ND	D018	0.5	**0.83**	**1.7**	**1.2**	**1.5**	**1.2**	**3.3**	**2.4**	**3.8**
Carbon Tetrachloride	158	ND	D019	0.5	<0.40	<0.20	<0.40	<0.20	<0.40	<0.40	<0.40	<0.40
Chlorobenzene	158	ND	D021	100	<0.40	<0.20	<0.40	<0.20	<0.40	<0.40	<0.40	<0.40
Chloroform	158	ND	D022	6	<0.40	<0.20	<0.40	<0.20	<0.40	<0.40	<0.40	<0.40
Methyl Ethyl Ketone	158	ND	D035	200	18.3	5.2	1.4	6.6	2	4.9	<1.0	1.2
Tetrachloroethylene	158	828	D039	0.7	**3360**	**1050**	**824**	**751**	**1010**	**10800**	**416**	**725**
Trichloroethylene	158	14.4	D040	0.5	**12.2**	**20.8**	**17.4**	**10.6**	**7.2**	**33.3**	**7**	**10.1**
Vinyl Chloride	158	ND	D043	0.2	<0.30	<0.15	<0.30	<0.15	<0.30	<0.30	<0.30	<0.30

PWS 105

Analysis	Number of Samples	90 UCL for the 50th Percentile	Waste Code	Reg Limit	Rohnert Park,CA	Gering,NE	Denton,TX	Orange,TX	Orange,TX	Omaha,NE	Fargo,ND	Sioux Falls,SD
				Sample Number	2067123	2075107	2075710	2078392	2078397	2078406	2078822	2080677
				Year	2000	2001	2001	2001	2001	2001	2001	2001
BNA												
2,4,5-Trichlorophenol	157	ND	D041	400	<5.0	<5.0	<5.0	<5.0	<5.0	<5.0	<5.0	<5.0
2,4,6-Trichlorophenol	157	ND	D042	2	<2.0	<2.0	<2.0	<2.0	<2.0	<2.0	<2.0	<2.0
2,4-Dinitrotoluene	157	ND	D030	0.13	<0.13	<0.13	<0.13	<0.13	<0.13	<0.13	<0.13	<0.13
2-Methylphenol	157	ND	D023	200	<5.0	<5.0	<5.0	<5.0	<5.0	<5.0	<5.0	<5.0
3+4-Methylphenol	157	ND	D024/25	200	<5.0	<5.0	<5.0	<5.0	<5.0	<5.0	<5.0	<5.0
Hexachlorobenzene	157	ND	D032	0.13	<0.025	<0.025	<0.025	<0.025	<0.025	<0.025	<0.025	<0.025
Hexachlorobutadiene	158	ND	D033	0.5	<0.10	<0.10	<0.10	<0.10	<0.10	<0.10	<0.10	<0.10
Hexachloroethane	158	ND	D034	3	<1.0	<1.0	<1.0	<1.0	<1.0	<1.0	<1.0	<1.0
Nitrobenzene	157	ND	D036	2	<0.40	<0.40	<0.40	<0.40	<0.40	<0.40	<0.40	<0.40
Pentachlorophenol	157	ND	D037	100	<5.0	<5.0	<5.0	<5.0	<5.0	<5.0	<5.0	<5.0
Pyridine	157	ND	D038	5	<1.0	<1.0	<1.0	<1.0	<1.0	<1.0	<1.0	<1.0
METALS												
Arsenic	158	ND	D004	5	<5.00	<5.00	<5.00	<5.00	<5.00	<5.00	<5.00	<5.00
Barium	158	2.42	D005	100	1.89	11.8	<0.500	<0.500	6.46	6.62	<0.500	<0.500
Cadmium	158	ND	D006	1	<0.500	0.535	<0.500	<0.500	<0.500	<0.500	0.527	<0.500
Chromium	158	ND	D007	5	<0.500	<0.500	<0.500	<0.500	<0.500	<0.500	**7.11**	<0.500
Lead	158	ND	D008	5	<4.00	<4.00	<4.00	<4.00	4.29	<4.00	<4.00	<4.00
Mercury	158	ND	D009	0.2	<0.10	<0.10	<0.10	<0.10	<0.100	<0.10	<0.10	<0.10
Selenium	158	ND	D010	1	<0.45	<0.45	<0.45	<0.45	<0.45	<0.45	<0.45	<0.45
Silver	158	ND	D011	5	<0.500	<0.500	<0.500	<0.500	<0.500	<0.500	<0.500	<0.500
Misc												
Flash Point	157	138	D001	140	**78**	**129**	149	164	145	142	**136**	157
pH	161	7.2	D002	2-12.5	7.12	7.44	6.69	6.93	4.86	7.94	7.41	7.32
VOA												
1,1-Dichloroethylene	158	ND	D029	0.7	<0.80	<2.0	<1.6	<2.0	<2.0	<0.40	<2.0	<0.40
1,2-Dichloroethane	158	ND	D028	0.5	<0.40	<1.0	<0.80	<1.0	<1.0	<0.20	<1.0	<0.20
1,4-Dichlorobenzene	158	ND	D027	7.5	1.3	6.6	2	<2.5	<2.5	1.7	5.4	0.96
Benzene	158	ND	D018	0.5	**81.6**	**21.1**	**8.1**	<1.0	<1.0	0.33	**40.8**	0.25
Carbon Tetrachloride	158	ND	D019	0.5	<0.40	<1.0	<0.80	<1.0	<1.0	<0.20	<1.0	<0.20
Chlorobenzene	158	ND	D021	100	<0.40	<1.0	<0.80	<1.0	<1.0	<0.20	<1.0	<0.20
Chloroform	158	ND	D022	6	<0.40	<1.0	2.8	<1.0	<1.0	0.26	<1.0	<0.20
Methyl Ethyl Ketone	158	ND	D035	200	142	<2.5	4.5	<2.5	<2.5	2.6	<2.5	<0.50
Tetrachloroethylene	158	828	D039	0.7	**2430**	**4090**	**892**	**36**	**55.7**	**153**	**347**	**0.74**
Trichloroethylene	158	14.4	D040	0.5	**15.4**	**12.4**	**67.1**	<1.0	<1.0	**6.9**	**12.7**	<0.20
Vinyl Chloride	158	ND	D043	0.2	<0.30	<0.75	<0.60	<0.75	<0.75	<0.15	<0.75	<0.15

PWS 105

Analysis	Number of Samples	90 UCL for the 50th Percentile	Waste Code	Reg Limit	Albuquerque,NM	Grand Island,NE	Salt Lake City,UT	Syracuse,NY	Syracuse,NY	Syracuse,NY	No_ Amityville,NY
				Sample Number	2082219	2082497	2083130	2083420	2083438	2083444	2083717
				Year	2001	2001	2001	2001	2001	2001	2001
BNA											
2,4,5-Trichlorophenol	157	ND	D041	400	<5.0	<5.0	<5.0	<5.0	<5.0	<5.0	<5.0
2,4,6-Trichlorophenol	157	ND	D042	2	<2.0	<2.0	<2.0	<2.0	<2.0	<2.0	<2.0
2,4-Dinitrotoluene	157	ND	D030	0.13	<0.13	<0.13	<0.13	<0.13	<0.13	<0.13	<0.13
2-Methylphenol	157	ND	D023	200	<5.0	<5.0	<5.0	11.2	<5.0	<5.0	<5.0
3+4-Methylphenol	157	ND	D024/25	200	<5.0	<5.0	<5.0	8.69	10.1	<5.0	<5.0
Hexachlorobenzene	157	ND	D032	0.13	<0.025	<0.025	<0.025	<0.025	<0.025	<0.025	<0.025
Hexachlorobutadiene	158	ND	D033	0.5	<0.10	<0.10	<0.10	<0.10	<0.10	<0.10	<0.10
Hexachloroethane	158	ND	D034	3	<1.0	<1.0	<1.0	<1.0	<1.0	<1.0	<1.0
Nitrobenzene	157	ND	D036	2	<0.40	<0.40	<0.40	<0.40	<0.40	<0.40	<0.40
Pentachlorophenol	157	ND	D037	100	<5.0	<5.0	<5.0	<5.0	<5.0	<5.0	<5.0
Pyridine	157	ND	D038	5	<1.0	<1.0	<1.0	<1.0	<1.0	<1.0	<1.0
METALS											
Arsenic	158	ND	D004	5	<5.00	<5.00	<5.00	<5.00	<5.00	<5.00	<5.00
Barium	158	2.42	D005	100	0.730	0.869	1.40	<0.500	<0.500	1.93	0.740
Cadmium	158	ND	D006	1	<0.500	<0.500	<0.500	<0.500	<0.500	<0.500	<0.500
Chromium	158	ND	D007	5	<0.500	<0.500	<0.500	<0.500	<0.500	<0.500	<0.500
Lead	158	ND	D008	5	<4.00	**16.4**	<4.00	<4.00	<4.00	<4.00	<4.00
Mercury	158	ND	D009	0.2	<0.10	<0.10	<0.10	<0.10	<0.10	<0.10	<0.10
Selenium	158	ND	D010	1	<0.45	<0.45	<0.45	<0.45	<0.45	<0.45	<0.45
Silver	158	ND	D011	5	<0.500	<0.500	<0.500	<0.500	<0.500	<0.500	<0.500
Misc											
Flash Point	157	138	D001	140	**128**	141	154	152	**123**	**124**	**122**
pH	161	7.2	D002	2-12.5	6.85	9.37	5.18	5.92	7.24	7.38	8.32
VOA											
1,1-Dichloroethylene	158	ND	D029	0.7	<1.6	<1.6	<1.6	<1.6	<1.6	<1.6	<1.6
1,2-Dichloroethane	158	ND	D028	0.5	<0.80	<0.80	<0.80	<0.80	<0.80	<0.80	<0.80
1,4-Dichlorobenzene	158	ND	D027	7.5	<2.0	4.3	<2.0	6.7	7.2	7.4	3.7
Benzene	158	ND	D018	0.5	<0.80	**2**	**5**	**1.4**	**1.6**	**2.1**	**38.2**
Carbon Tetrachloride	158	ND	D019	0.5	<0.80	<0.80	<0.80	<0.80	<0.80	<0.80	<0.80
Chlorobenzene	158	ND	D021	100	<0.80	<0.80	<0.80	<0.80	<0.80	<0.80	<0.80
Chloroform	158	ND	D022	6	<0.80	<0.80	<0.80	<0.80	<0.80	<0.80	<0.80
Methyl Ethyl Ketone	158	ND	D035	200	<2.0	<2.0	12.4	2.5	<2.0	3.1	2.1
Tetrachloroethylene	158	828	D039	0.7	**945**	**325**	**1090**	**748**	**2040**	**1050**	**1130**
Trichloroethylene	158	14.4	D040	0.5	**1.1**	**4.8**	**43.9**	**21.5**	**16.5**	**35.8**	**31.3**
Vinyl Chloride	158	ND	D043	0.2	<0.60	<0.60	<0.60	<0.60	<0.60	<0.60	<0.60

PWS 105

Analysis	Number of Samples	90 UCL for the 50th Percentile	Waste Code	Reg Limit							
				Sample Number	2083720	2083721	2085292	2085303	2085304	2085317	2089012
				Year	2001	2001	2001	2001	2001	2001	2001
					No_ Amityville,NY	No_ Amityville,NY	Lackawanna,NY	Lackawanna,NY	Clackamas,OR	Lackawanna,NY	Macon,GA
BNA											
2,4,5-Trichlorophenol	157	ND	D041	400	<5.0	<5.0	<5.0	<5.0	<5.0	<5.0	<5.0
2,4,6-Trichlorophenol	157	ND	D042	2	<2.0	<2.0	<2.0	<2.0	<2.0	<2.0	<2.0
2,4-Dinitrotoluene	157	ND	D030	0.13	<0.13	<0.13	<0.13	<0.13	<0.13	<0.13	<0.13
2-Methylphenol	157	ND	D023	200	8.41	<5.0	<5.0	<5.0	<5.0	<5.0	<5.0
3+4-Methylphenol	157	ND	D024/25	200	<6.7	<5.0	<5.0	<5.0	<5.0	<5.0	<5.0
Hexachlorobenzene	157	ND	D032	0.13	<0.025	<0.025	<0.025	<0.025	<0.025	<0.025	<0.025
Hexachlorobutadiene	158	ND	D033	0.5	<0.10	<0.10	<0.10	<0.10	<0.10	<0.10	<0.10
Hexachloroethane	158	ND	D034	3	<1.0	<1.0	<1.0	<1.0	<1.0	<1.0	<1.0
Nitrobenzene	157	ND	D036	2	<0.40	<0.40	<0.40	<0.40	<0.40	<0.40	<0.40
Pentachlorophenol	157	ND	D037	100	<5.0	<5.0	<5.0	<5.0	<5.0	<5.0	<5.0
Pyridine	157	ND	D038	5	<1.0	<1.0	<1.0	<1.0	<1.0	<1.0	<1.0
METALS											
Arsenic	158	ND	D004	5	<5.00	<5.00	<5.00	<5.00	<5.00	<5.00	<5.00
Barium	158	2.42	D005	100	0.672	<0.500	<0.500	<0.500	4.00	<0.500	3.73
Cadmium	158	ND	D006	1	<0.500	**1.56**	<0.500	<0.500	<0.500	<0.500	<0.500
Chromium	158	ND	D007	5	<0.500	<0.500	<0.500	<0.500	<0.500	<0.500	<0.500
Lead	158	ND	D008	5	<4.00	<4.00	<4.00	<4.00	<4.00	4.85	<4.00
Mercury	158	ND	D009	0.2	<0.10	<0.10	<0.10	<0.10	<0.10	<0.10	<0.10
Selenium	158	ND	D010	1	<0.45	<0.45	<0.45	<0.45	<0.45	<0.45	<0.45
Silver	158	ND	D011	5	<0.500	<0.500	<0.500	<0.500	<0.500	<0.500	<0.500
Misc											
Flash Point	157	138	D001	140	142	144	144	146	148	144	**116**
pH	161	7.2	D002	2-12.5	7.68	7.21	7.07	6.26	4.61	5.07	6.44
VOA											
1,1-Dichloroethylene	158	ND	D029	0.7	<1.6	<1.6	<1.6	<1.6	<1.6	<1.6	<2.0
1,2-Dichloroethane	158	ND	D028	0.5	<0.80	<0.80	<0.80	<0.80	<0.80	<0.80	<1.0
1,4-Dichlorobenzene	158	ND	D027	7.5	4.2	5.2	4.5	4.2	2.1	4.4	<2.5
Benzene	158	ND	D018	0.5	<0.80	<0.80	**1.8**	**1.8**	**5.8**	**2**	**1.7**
Carbon Tetrachloride	158	ND	D019	0.5	<0.80	<0.80	<0.80	<0.80	<0.80	<0.80	<1.0
Chlorobenzene	158	ND	D021	100	<0.80	<0.80	<0.80	<0.80	<0.80	<0.80	<1.0
Chloroform	158	ND	D022	6	<0.80	<0.80	<0.80	<0.80	<0.80	<0.80	<1.0
Methyl Ethyl Ketone	158	ND	D035	200	<2.0	<2.0	<2.0	<2.0	<2.0	2	12.1
Tetrachloroethylene	158	828	D039	0.7	**949**	**509**	**900**	**748**	**1360**	**889**	**1090**
Trichloroethylene	158	14.4	D040	0.5	**14.4**	**7.8**	**17.8**	**16.3**	**24.8**	**17.8**	**24.9**
Vinyl Chloride	158	ND	D043	0.2	<0.60	<0.60	<0.60	<0.60	<0.60	<0.60	<0.75

PWS 105

Analysis	Number of Samples	90 UCL for the 50th Percentile	Waste Code	Reg Limit	Columbus,GA	Oklahoma City,OK	Tulsa,OK	Longview,TX	Cohoes,NY	Cohoes,NY	Cohoes,NY	Pineville,LA
				Sample Number	2089567	2090894	2091979	2092403	2093718	2093722	2093723	2093898
				Year	2001	2001	2001	2001	2001	2001	2001	2001
BNA												
2,4,5-Trichlorophenol	157	ND	D041	400	<5.0	<5.0	<5.0	<5.0	<5.0	<5.0	<5.0	<5.0
2,4,6-Trichlorophenol	157	ND	D042	2	<2.0	<2.0	<2.0	<2.0	<2.0	<2.0	<2.0	<2.0
2,4-Dinitrotoluene	157	ND	D030	0.13	<0.13	<0.13	<0.13	<0.13	<0.13	<0.13	<0.13	<0.13
2-Methylphenol	157	ND	D023	200	<5.0	<5.0	<5.0	<5.0	<5.0	<5.0	<5.0	<5.0
3+4-Methylphenol	157	ND	D024/25	200	<5.0	<5.0	<5.0	<5.0	<5.0	<5.0	<5.0	<5.0
Hexachlorobenzene	157	ND	D032	0.13	<0.025	<0.025	<0.025	<0.025	<0.025	<0.025	<0.025	<0.025
Hexachlorobutadiene	158	ND	D033	0.5	<0.10	<0.10	<0.10	<0.10	<0.10	<0.10	<0.10	<0.10
Hexachloroethane	158	ND	D034	3	<1.0	<1.0	<1.0	<1.0	<1.0	<1.0	<1.0	<1.0
Nitrobenzene	157	ND	D036	2	<0.40	<0.40	<0.40	<0.40	<0.40	<0.40	<0.40	<0.40
Pentachlorophenol	157	ND	D037	100	<5.0	<5.0	<5.0	<5.0	<5.0	<5.0	<5.0	<5.0
Pyridine	157	ND	D038	5	<1.0	<1.0	<1.0	<1.0	<1.0	<1.0	<1.0	<1.0
METALS												
Arsenic	158	ND	D004	5	<5.00	<5.00	<5.00	<5.00	<5.00	<5.00	<5.00	<5.00
Barium	158	2.42	D005	100	2.32	1.45	2.23	18.2	<0.500	<0.500	0.532	1.67
Cadmium	158	ND	D006	1	0.759	0.670	<0.500	0.587	<0.500	<0.500	<0.500	<0.500
Chromium	158	ND	D007	5	0.563	<0.500	<0.500	0.975	<0.500	<0.500	<0.500	<0.500
Lead	158	ND	D008	5	**16.2**	4.02	<4.00	<4.00	<4.00	<4.00	<4.00	<4.00
Mercury	158	ND	D009	0.2	<0.10	<0.10	<0.10	<0.10	<0.10	<0.10	<0.10	<0.10
Selenium	158	ND	D010	1	<0.45	<0.45	<0.45	<0.45	<0.45	<0.45	<0.45	<0.45
Silver	158	ND	D011	5	<0.500	<0.500	<0.500	<0.500	<0.500	<0.500	<0.500	<0.500
Misc												
Flash Point	157	138	D001	140	160	154	156	158	**118**	**120**	**118**	**78**
pH	161	7.2	D002	2-12.5	6.77	7.23	7.05	6.02	7.12	6.05	6.52	6.99
VOA												
1,1-Dichloroethylene	158	ND	D029	0.7	<2.0	<2.0	<0.80	<1.6	<1.6	<1.6	<0.40	<1.6
1,2-Dichloroethane	158	ND	D028	0.5	<1.0	<1.0	<0.40	<0.80	<0.80	<0.80	<0.20	<0.80
1,4-Dichlorobenzene	158	ND	D027	7.5	<2.5	<2.5	<1.0	<2.0	5.1	4.5	5.7	4.5
Benzene	158	ND	D018	0.5	<1.0	**4.8**	**0.7**	**1.9**	**4.9**	**4.3**	**5.3**	**4.6**
Carbon Tetrachloride	158	ND	D019	0.5	<1.0	<1.0	<0.40	<0.80	<0.80	<0.80	<0.20	<0.80
Chlorobenzene	158	ND	D021	100	<1.0	<1.0	<0.40	<0.80	<0.80	<0.80	<0.20	<0.80
Chloroform	158	ND	D022	6	<1.0	<1.0	<0.40	<0.80	<0.80	<0.80	<0.20	<0.80
Methyl Ethyl Ketone	158	ND	D035	200	36.5	4.6	91.3	2.2	17.2	18.4	18.5	19.4
Tetrachloroethylene	158	828	D039	0.7	**838**	**758**	**268**	**286**	**943**	**852**	**1150**	**912**
Trichloroethylene	158	14.4	D040	0.5	**1.4**	**8.8**	**7.9**	**10.7**	**18.2**	**17.3**	**23.2**	**19**
Vinyl Chloride	158	ND	D043	0.2	<0.75	<0.75	<0.30	<0.60	<0.60	<0.60	<0.15	<0.60

PWS 105

				Sample Number	2094180	2094379	2094880	2097351	2098603	2098615	2099685	2100671
				Year	2001	2001	2001	2001	2001	2001	2001	2001
Analysis	Number of Samples	90 UCL for the 50th Percentile	Waste Code	Reg Limit	Farmington,NM	St_ Charles,MO	Morrow,GA	Avon,NY	Santa Anna,CA	Greer,SC	Rohnert Park,CA	Dodge City,KS
BNA												
2,4,5-Trichlorophenol	157	ND	D041	400	<5.0	<5.0	<5.0	<5.0	<5.0	<10.0	<5.0	<5.0
2,4,6-Trichlorophenol	157	ND	D042	2	<2.0	<2.0	<2.0	<2.0	<2.0	<4.0	<2.0	<2.0
2,4-Dinitrotoluene	157	ND	D030	0.13	<0.13	<0.13	<0.13	<0.13	<0.13	<0.26	<0.13	<0.13
2-Methylphenol	157	ND	D023	200	<5.0	<5.0	<5.0	<5.0	<5.0	<10.0	<5.0	<5.0
3+4-Methylphenol	157	ND	D024/25	200	<5.0	<5.0	<5.0	<5.0	<5.0	<10.0	<5.0	<5.0
Hexachlorobenzene	157	ND	D032	0.13	0.043108	<0.025	<0.025	<0.025	<0.025	<0.025	<0.025	<0.025
Hexachlorobutadiene	158	ND	D033	0.5	<0.10	<0.10	<0.10	<0.10	<0.10	<0.10	<0.10	<0.10
Hexachloroethane	158	ND	D034	3	<1.0	<1.0	<1.0	<1.0	<1.0	<1.0	<1.0	<1.0
Nitrobenzene	157	ND	D036	2	<0.40	<0.40	<0.40	<0.40	<0.40	<0.80	<0.40	<0.40
Pentachlorophenol	157	ND	D037	100	<5.0	<5.0	<5.0	<5.0	<5.0	<10.0	<5.0	<5.0
Pyridine	157	ND	D038	5	<1.0	<1.0	<1.0	<1.0	<1.0	<2.0	<1.0	<1.0
METALS												
Arsenic	158	ND	D004	5	<5.00	<5.00	<5.00	<5.00	<5.00	<5.00	<5.00	<5.00
Barium	158	2.42	D005	100	<0.500	<0.500	8.26	1.59	1.16	0.608	1.80	0.609
Cadmium	158	ND	D006	1	<0.500	<0.500	<0.500	<0.500	<0.500	0.792	<0.500	<0.500
Chromium	158	ND	D007	5	<0.500	<0.500	<0.500	<0.500	<0.500	<0.500	<0.500	<0.500
Lead	158	ND	D008	5	<4.00	<4.00	<4.00	<4.00	<4.00	<4.00	4.98	**5.58**
Mercury	158	ND	D009	0.2	<0.10	<0.10	<0.100	<0.10	<0.10	<0.100	<0.10	<0.100
Selenium	158	ND	D010	1	<0.45	<0.45	<0.45	<0.45	<0.45	<0.45	<0.45	<0.45
Silver	158	ND	D011	5	<0.500	<0.500	<0.500	<0.500	<0.500	<0.500	<0.500	<0.500
Misc												
Flash Point	157	138	D001	140	**122**	152	150	146	153	156	**138**	160
pH	161	7.2	D002	2-12.5	6.30	7.66	7.09	7.22	6.49	6.72	7.19	9.04
VOA												
1,1-Dichloroethylene	158	ND	D029	0.7	<0.40	<0.40	<1.6	<0.80	<1.6	<1.6	<1.6	<0.80
1,2-Dichloroethane	158	ND	D028	0.5	<0.20	<0.20	<0.80	<0.40	<0.80	<0.80	<0.80	<0.40
1,4-Dichlorobenzene	158	ND	D027	7.5	<0.50	1.3	<2.0	3.7	<2.0	<2.0	<2.0	<1.0
Benzene	158	ND	D018	0.5	**0.82**	<0.20	**0.99**	**2.1**	**1.7**	<0.80	**10.8**	0.5
Carbon Tetrachloride	158	ND	D019	0.5	<0.20	<0.20	<0.80	<0.40	<0.80	<0.80	<0.80	<0.40
Chlorobenzene	158	ND	D021	100	<0.20	<0.20	<0.80	<0.40	<0.80	<0.80	<0.80	<0.40
Chloroform	158	ND	D022	6	<0.20	<0.20	<0.80	<0.40	<0.80	<0.80	<0.80	<0.40
Methyl Ethyl Ketone	158	ND	D035	200	82.5	2	<2.0	90.9	99.9	56.5	49.9	<1.0
Tetrachloroethylene	158	828	D039	0.7	**22.9**	0.57	**1520**	**1060**	**1170**	**835**	**3710**	**184**
Trichloroethylene	158	14.4	D040	0.5	0.3	<0.20	**19.6**	**37.4**	**30.2**	**4.8**	**10**	**6.8**
Vinyl Chloride	158	ND	D043	0.2	<0.15	<0.15	<0.60	<0.30	<0.60	<0.60	<0.60	<0.30

PWS 105

Analysis	Number of Samples	90 UCL for the 50th Percentile	Waste Code	Reg Limit	Ashland,KY	Ashland,KY	Ashland,KY	Blaine,MN	Norcross,GA	Rohnert Park,CA	Salt Lake City,UT	Lexington,KY
				Sample Number	2107122	2107132	2107134	2112364	2113299	2118930	2118960	2122262
				Year	2001	2001	2001	2001	2001	2001	2001	2001
BNA												
2,4,5-Trichlorophenol	157	ND	D041	400	<5.0	<5.0	<5.0	<5.0	<5.0	<5.0	<5.0	<5.0
2,4,6-Trichlorophenol	157	ND	D042	2	<2.0	<2.0	<2.0	<2.0	<2.0	<2.0	<2.0	<2.0
2,4-Dinitrotoluene	157	ND	D030	0.13	<0.13	<0.13	<0.13	<0.13	<0.13	<0.13	<0.13	<0.13
2-Methylphenol	157	ND	D023	200	<5.0	<5.0	5.01	<5.0	<5.0	11.9	<5.0	<5.0
3+4-Methylphenol	157	ND	D024/25	200	<5.0	<5.0	<5.0	<5.0	<5.0	6.12	<5.0	<5.0
Hexachlorobenzene	157	ND	D032	0.13	<0.025	<0.025	<0.025	<0.025	<0.025	<0.025	<0.025	<0.025
Hexachlorobutadiene	158	ND	D033	0.5	**0.52691**	0.25329	0.48637	<0.10	<0.10	<0.10	<0.10	<0.10
Hexachloroethane	158	ND	D034	3	<1.0	<1.0	<1.0	<1.0	<1.0	<1.0	<1.0	<1.0
Nitrobenzene	157	ND	D036	2	<0.40	<0.40	<0.40	<0.40	<0.40	<0.40	<0.40	<0.40
Pentachlorophenol	157	ND	D037	100	<5.0	<5.0	<5.0	<5.0	<5.0	<5.0	<5.0	<5.0
Pyridine	157	ND	D038	5	<1.0	<1.0	<1.0	<1.0	<1.0	<1.0	<1.0	<1.0
METALS												
Arsenic	158	ND	D004	5	<5.00	<5.00	<5.00	<5.00	<5.00	<5.00	<5.00	<5.00
Barium	158	2.42	D005	100	<0.500	<0.500	<0.500	1.17	<0.500	0.547	1.34	<0.500
Cadmium	158	ND	D006	1	<0.500	<0.500	0.879	<0.500	<0.500	<0.500	<0.500	<0.500
Chromium	158	ND	D007	5	<0.500	<0.500	<0.500	<0.500	<0.500	<0.500	<0.500	<0.500
Lead	158	ND	D008	5	4.56	<4.00	<4.00	**15.9**	<4.00	<4.00	<4.00	<4.00
Mercury	158	ND	D009	0.2	<0.10	<0.10	<0.100	<0.100	<0.10	<0.10	<0.100	<0.10
Selenium	158	ND	D010	1	<0.45	<0.45	<0.45	<0.45	<0.45	<0.45	<0.45	<0.45
Silver	158	ND	D011	5	<0.500	<0.500	<0.500	<0.500	<0.500	<0.500	<0.500	<0.500
Misc												
Flash Point	157	138	D001	140	146	**134**	**136**	**131**	154	**110**	155	160
pH	161	7.2	D002	2-12.5	7.18	7.12	7.66	7.36	7.1	6.98	7.45	9.26
VOA												
1,1-Dichloroethylene	158	ND	D029	0.7	<0.40	<0.40	<0.40	<0.40	<0.40	<0.40	<0.40	<0.40
1,2-Dichloroethane	158	ND	D028	0.5	<0.20	<0.20	<0.20	<0.20	<0.20	<0.20	<0.20	<0.20
1,4-Dichlorobenzene	158	ND	D027	7.5	4.9	5.3	6.6	1.2	1.3	0.63	0.57	1.1
Benzene	158	ND	D018	0.5	<0.20	**9.8**	**0.81**	**0.53**	**16.7**	**42.2**	**6.3**	<0.20
Carbon Tetrachloride	158	ND	D019	0.5	<0.20	<0.20	<0.20	<0.20	<0.20	<0.20	<0.20	<0.20
Chlorobenzene	158	ND	D021	100	<0.20	<0.20	<0.20	<0.20	<0.20	<0.20	<0.20	<0.20
Chloroform	158	ND	D022	6	<0.20	<0.20	<0.20	<0.20	<0.20	<0.20	<0.20	<0.20
Methyl Ethyl Ketone	158	ND	D035	200	<0.50	2.2	0.76	<0.50	0.98	6.5	6.2	<0.50
Tetrachloroethylene	158	828	D039	0.7	**121**	**830**	**934**	**726**	**766**	**964**	**1000**	0.31
Trichloroethylene	158	14.4	D040	0.5	<0.20	**42.5**	**22.7**	**77**	**13.2**	**18.8**	**47.6**	**0.59**
Vinyl Chloride	158	ND	D043	0.2	<0.15	<0.15	<0.15	<0.15	<0.15	<0.15	<0.15	<0.15

PWS 105

Analysis	Number of Samples	90 UCL for the 50th Percentile	Waste Code	Reg Limit	Lexington,KY	Lexington,KY	Lexington,KY	Lexington,KY	Lexington,KY	Lexington,KY	Lexington,KY	Lexington,KY
				Sample Number	2122270	2122332	2122366	2122368	2122373	2122374	2122376	2122379
				Year	2001	2001	2001	2001	2001	2001	2001	2001
BNA												
2,4,5-Trichlorophenol	157	ND	D041	400	<5.0	<0.15	<5.0	<5.0	<5.0	<5.0	<5.0	<5.0
2,4,6-Trichlorophenol	157	ND	D042	2	<2.0	<0.15	<2.0	<2.0	<2.0	<2.0	<2.0	<2.0
2,4-Dinitrotoluene	157	ND	D030	0.13	<0.13	<0.020	<0.13	<0.13	<0.13	<0.13	<0.13	<0.13
2-Methylphenol	157	ND	D023	200	<5.0	<10.0	<5.0	<5.0	<5.0	<5.0	<5.0	<5.0
3+4-Methylphenol	157	ND	D024/25	200	<5.0	<10.0	<5.0	<5.0	<5.0	<5.0	<5.0	<5.0
Hexachlorobenzene	157	ND	D032	0.13	<0.025	<0.020	<0.025	<0.025	<0.025	<0.025	<0.025	<0.025
Hexachlorobutadiene	158	ND	D033	0.5	<0.10	<0.10	0.23804	0.28309	0.22204	<0.10	0.20989	0.22402
Hexachloroethane	158	ND	D034	3	<1.0	<0.10	<1.0	<1.0	<1.0	<1.0	<1.0	<1.0
Nitrobenzene	157	ND	D036	2	<0.40	<0.10	<0.40	<0.40	<0.40	<0.40	<0.40	<0.40
Pentachlorophenol	157	ND	D037	100	<5.0	<0.26	<5.0	<5.0	<5.0	<5.0	<5.0	<5.0
Pyridine	157	ND	D038	5	<1.0	<0.25	<1.0	<1.0	<1.0	<1.0	<1.0	<1.0
METALS												
Arsenic	158	ND	D004	5	<5.00	<5.00	<5.00	<5.00	<5.00	<5.00	<5.00	<5.00
Barium	158	2.42	D005	100	7.29	1.78	0.682	<0.500	0.706	3.75	37.1	0.990
Cadmium	158	ND	D006	1	<0.500	<0.500	<0.500	<0.500	<0.500	<0.500	<0.500	<0.500
Chromium	158	ND	D007	5	<0.500	<0.500	<0.500	<0.500	<0.500	<0.500	<0.500	<0.500
Lead	158	ND	D008	5	<4.00	<4.00	<4.00	<4.00	<4.00	<4.00	<4.00	<4.00
Mercury	158	ND	D009	0.2	<0.10	**0.682**	<0.10	<0.10	<0.10	<0.10	<0.10	<0.10
Selenium	158	ND	D010	1	<0.45	<0.45	<0.45	<0.45	<0.45	<0.45	<0.45	<0.45
Silver	158	ND	D011	5	<0.500	<0.500	<0.500	<0.500	<0.500	<0.500	<0.500	<0.500
Misc												
Flash Point	157	138	D001	140	**96**	**138**	**136**	151	**132**	141	152	**136**
pH	161	7.2	D002	2-12.5	8.36	8.28	9.16	6.81	3.80	7.44	7.19	7.94
VOA												
1,1-Dichloroethylene	158	ND	D029	0.7	<0.40	<0.20	<0.40	<0.40	<0.40	<0.40	<0.40	<0.40
1,2-Dichloroethane	158	ND	D028	0.5	<0.20	<0.20	<0.20	<0.20	<0.20	<0.20	<0.20	<0.20
1,4-Dichlorobenzene	158	ND	D027	7.5	0.64	<0.20	0.68	1.1	0.78	0.83	1	<0.50
Benzene	158	ND	D018	0.5	**273**	<0.20	**4.8**	<0.20	**0.85**	**9.5**	<0.20	**0.58**
Carbon Tetrachloride	158	ND	D019	0.5	<0.20	<0.20	<0.20	<0.20	<0.20	<0.20	<0.20	<0.20
Chlorobenzene	158	ND	D021	100	<0.20	<0.20	<0.20	<0.20	<0.20	<0.20	<0.20	<0.20
Chloroform	158	ND	D022	6	**24**	<0.20	<0.20	<0.20	<0.20	<0.20	<0.20	<0.20
Methyl Ethyl Ketone	158	ND	D035	200	0.99	1.374	<0.50	<0.50	<0.50	<0.50	<0.50	<0.50
Tetrachloroethylene	158	828	D039	0.7	<0.20	0.215	**660**	**12.2**	**683**	0.22	**29.2**	**813**
Trichloroethylene	158	14.4	D040	0.5	<0.20	<0.20	**3.7**	**0.6**	**12.6**	<0.20	**1.7**	**16.8**
Vinyl Chloride	158	ND	D043	0.2	<0.15	<0.14	<0.15	<0.15	<0.15	<0.15	<0.15	<0.15

PWS 105

Analysis	Number of Samples	90 UCL for the 50th Percentile	Waste Code	Reg Limit	Lexington,KY	Lexington,KY	Salida,CA	Los Angeles,CA	Orange,TX	Eagan,MN	Eagan,MN	Medley,FL	Greer,SC
				Sample Number	2122380	2122381	2126764	2131618	2132635	2133966	2134012	2137632	2138233
				Year	2001	2001	2001	2002	2002	2002	2002	2002	2002
BNA													
2,4,5-Trichlorophenol	157	ND	D041	400	<5.0	<5.0	<5.0	<5.0	<5.0	<5.0	<5.0	<5.0	<5.0
2,4,6-Trichlorophenol	157	ND	D042	2	<2.0	<2.0	<2.0	<2.0	<2.0	<2.0	<2.0	<2.0	<2.0
2,4-Dinitrotoluene	157	ND	D030	0.13	<0.13	<0.13	<0.13	<0.13	<0.13	<0.13	<0.13	<0.13	<0.13
2-Methylphenol	157	ND	D023	200	<5.0	<5.0	<5.0	<5.0	<5.0	<5.0	<5.0	<5.0	<5.0
3+4-Methylphenol	157	ND	D024/25	200	<5.0	<5.0	<5.0	<5.0	<5.0	<5.0	<5.0	<5.0	<5.0
Hexachlorobenzene	157	ND	D032	0.13	<0.025	<0.025	<0.025	<0.025	<0.025	<0.025	<0.025	<0.025	<0.025
Hexachlorobutadiene	158	ND	D033	0.5	0.23407	<0.10	<0.10	<0.10	<0.10	<0.10	<0.10	<0.10	<0.10
Hexachloroethane	158	ND	D034	3	<1.0	<1.0	<1.0	<1.0	<1.0	<1.0	<1.0	<1.0	<1.0
Nitrobenzene	157	ND	D036	2	<0.40	<0.40	<0.40	<0.40	<0.40	<0.40	<0.40	<0.40	<0.40
Pentachlorophenol	157	ND	D037	100	<5.0	<5.0	<5.0	<5.0	<5.0	<5.0	<5.0	<5.0	<5.0
Pyridine	157	ND	D038	5	<1.0	<1.0	<1.0	<1.0	<1.0	<1.0	<1.0	<1.0	<1.0
METALS													
Arsenic	158	ND	D004	5	<5.00	<5.00	<5.00	<5.00	<5.00	<5.00	<5.00	<5.00	<5.00
Barium	158	2.42	D005	100	0.910	<0.500	<0.500	14.4	14.5	<5.00	<5.00	<5.00	<5.00
Cadmium	158	ND	D006	1	<0.500	<0.500	<0.500	0.559	<0.500	<0.500	0.537	<0.500	<0.500
Chromium	158	ND	D007	5	<0.500	<0.500	<0.500	<0.500	<0.500	<0.500	<0.500	<0.500	<0.500
Lead	158	ND	D008	5	<4.00	**27.3**	<4.00	**10.1**	**6.50**	**5.83**	**7.47**	4.05	**9.23**
Mercury	158	ND	D009	0.2	<0.10	<0.10	<0.10	<0.10	<0.10	<0.040	<0.1	<0.040	<0.040
Selenium	158	ND	D010	1	<0.45	<0.45	<0.45	<0.45	<0.45	<0.45	<0.45	<0.45	<0.45
Silver	158	ND	D011	5	<0.500	<0.500	<0.500	<0.500	<0.500	<0.500	<0.500	<0.500	<0.500
Misc													
Flash Point	157	138	D001	140	**135**	**111**	146	**134**	149	147	149	159	151
pH	161	7.2	D002	2-12.5	8.05	6.9	6.6	6.15	6.87	7.32	7.94	6.38	6.85
VOA													
1,1-Dichloroethylene	158	ND	D029	0.7	<0.40	<0.40	<0.40	<0.40	<0.40	<0.40	<0.40	<0.40	<0.40
1,2-Dichloroethane	158	ND	D028	0.5	<0.20	<0.20	<0.20	<0.20	<0.20	<0.20	<0.20	<0.20	<0.20
1,4-Dichlorobenzene	158	ND	D027	7.5	0.61	1.4	0.64	1.6	0.61	1.5	1.6	1.2	1.2
Benzene	158	ND	D018	0.5	**2.8**	<0.20	**1.3**	0.24	**2**	**2.1**	**2**	0.26	**0.66**
Carbon Tetrachloride	158	ND	D019	0.5	<0.20	<0.20	<0.20	<0.20	<0.20	<0.20	<0.20	0.2	<0.20
Chlorobenzene	158	ND	D021	100	<0.20	<0.20	<0.20	<0.20	<0.20	<0.20	<0.20	<0.20	<0.20
Chloroform	158	ND	D022	6	<0.20	<0.20	<0.20	<0.20	<0.20	<0.20	<0.20	<0.20	<0.20
Methyl Ethyl Ketone	158	ND	D035	200	<0.50	1.3	9.1	12.8	0.56	8.5	7.6	<0.50	<0.50
Tetrachloroethylene	158	828	D039	0.7	**372**	**0.75**	**873**	**444**	**140**	**765**	**794**	**1800**	**4750**
Trichloroethylene	158	14.4	D040	0.5	**0.58**	<0.20	**7.9**	**3.2**	**2.7**	**38.3**	**39.8**	**1.1**	**5.6**
Vinyl Chloride	158	ND	D043	0.2	<0.15	<0.15	<0.15	<0.15	<0.15	<0.15	<0.15	<0.15	<0.15

PWS 105

				Sample Number	2138813	2139842	2140404	2140416	2141001	2141025	2141714	2143984
				Year	2002	2002	2002	2002	2002	2002	2002	2002
Analysis	Number of Samples	90 UCL for the 50th Percentile	Waste Code	Reg Limit	Tallahassee,FL	Garden City,GA	Columbus,GA	Macon,GA	Norcross,GA	Oakland,CA	Morrow,GA	No_ Amityville,NY
BNA												
2,4,5-Trichlorophenol	157	ND	D041	400	<5.0	<5.0	<5.0	<5.0	<5.0	<5.0	<5.0	<5.0
2,4,6-Trichlorophenol	157	ND	D042	2	<2.0	<2.0	<2.0	<2.0	<2.0	<2.0	<2.0	<2.0
2,4-Dinitrotoluene	157	ND	D030	0.13	<0.13	<0.13	<0.13	<0.13	<0.13	<0.13	<0.13	<0.13
2-Methylphenol	157	ND	D023	200	<5.0	<5.0	<5.0	<5.0	<5.0	<5.0	<5.0	<5.0
3+4-Methylphenol	157	ND	D024/25	200	<5.0	<5.0	<5.0	<5.0	<5.0	<5.0	<5.0	<5.0
Hexachlorobenzene	157	ND	D032	0.13	<0.025	<0.025	<0.025	<0.025	<0.025	<0.025	<0.025	<0.025
Hexachlorobutadiene	158	ND	D033	0.5	<0.10	<0.10	<0.10	<0.10	<0.10	<0.10	<0.10	<0.10
Hexachloroethane	158	ND	D034	3	<1.0	<1.0	<1.0	<1.0	<1.0	<1.0	<1.0	<1.0
Nitrobenzene	157	ND	D036	2	<0.40	<0.40	<0.40	<0.40	<0.40	<0.40	<0.40	<0.40
Pentachlorophenol	157	ND	D037	100	<5.0	<5.0	<5.0	<5.0	<5.0	<5.0	<5.0	<5.0
Pyridine	157	ND	D038	5	<1.0	<1.0	<1.0	<1.0	<1.0	<1.0	<1.0	<1.0
METALS												
Arsenic	158	ND	D004	5	<5.00	<5.00	<5.00	<5.00	<5.00	<5.00	<5.00	<5.00
Barium	158	2.42	D005	100	<5.00	<5.00	<5.00	<5.00	<5.00	7.84	<5.00	<5.00
Cadmium	158	ND	D006	1	0.515	<0.500	<0.500	<0.500	<0.500	<0.500	<0.500	<0.500
Chromium	158	ND	D007	5	<0.500	<0.500	<0.500	<0.500	<0.500	<0.500	<0.500	<0.500
Lead	158	ND	D008	5	<4.00	<4.00	4.33	<4.00	<4.00	<4.00	<4.00	**6.07**
Mercury	158	ND	D009	0.2	<0.040	<0.040	<0.040	<0.040	<0.10	<0.040	<0.040	<0.040
Selenium	158	ND	D010	1	<0.45	<0.45	<0.45	<0.45	<0.45	<0.45	<0.45	<0.45
Silver	158	ND	D011	5	<0.500	<0.500	<0.500	<0.500	<0.500	<0.500	<0.500	<0.500
Misc												
Flash Point	157	138	D001	140	164	149	146	165	**126**	156	**136**	**131**
pH	161	7.2	D002	2-12.5	10.19	5.04	6.28	5.12	6.97	6.18	6.75	7.25
VOA												
1,1-Dichloroethylene	158	ND	D029	0.7	<0.40	<0.40	<0.40	<0.40	<0.40	<0.40	<0.40	<0.40
1,2-Dichloroethane	158	ND	D028	0.5	<0.20	<0.20	<0.20	<0.20	<0.20	<0.20	<0.20	<0.20
1,4-Dichlorobenzene	158	ND	D027	7.5	0.72	0.96	1	0.9	1.4	<0.50	<0.50	<0.50
Benzene	158	ND	D018	0.5	**0.76**	**6.2**	**29.6**	**1.1**	**1.4**	**1.4**	**0.87**	**18.8**
Carbon Tetrachloride	158	ND	D019	0.5	<0.20	<0.20	<0.20	<0.20	<0.20	<0.20	<0.20	<0.20
Chlorobenzene	158	ND	D021	100	<0.20	2.4	<0.20	<0.20	<0.20	<0.20	<0.20	<0.20
Chloroform	158	ND	D022	6	<0.20	<0.20	<0.20	<0.20	<0.20	<0.20	<0.20	<0.20
Methyl Ethyl Ketone	158	ND	D035	200	19.9	<0.50	6.4	0.61	1.2	1.1	0.88	<0.50
Tetrachloroethylene	158	828	D039	0.7	**927**	**4270**	**1020**	**671**	**1410**	**1080**	**84**	**454**
Trichloroethylene	158	14.4	D040	0.5	**11**	**1.9**	**9.2**	**3.8**	**25.9**	**11.7**	**0.82**	**5.3**
Vinyl Chloride	158	ND	D043	0.2	<0.15	<0.15	<0.15	<0.15	<0.15	<0.15	<0.15	<0.15

PWS 105

Analysis	Number of Samples	90 UCL for the 50th Percentile	Waste Code	Reg Limit	Clackamas,OR	No_ Amityville,NY	No_ Amityville,NY	Clackamas,OR	Lackawanna,NY	Lackawanna,NY
				Sample Number	2144184	2144185	2144187	2144195	2144818	2144827
				Year	2002	2002	2002	2002	2002	2002
BNA										
2,4,5-Trichlorophenol	157	ND	D041	400	<5.0	<5.0	<5.0	<5.0	<5.0	<5.0
2,4,6-Trichlorophenol	157	ND	D042	2	<2.0	<2.0	<2.0	<2.0	<2.0	<2.0
2,4-Dinitrotoluene	157	ND	D030	0.13	<0.13	<0.13	<0.13	<0.13	<0.13	<0.13
2-Methylphenol	157	ND	D023	200	<6.0	<5.0	<5.0	<5.0	12.9	<5.0
3+4-Methylphenol	157	ND	D024/25	200	<10.0	<5.0	<5.0	<5.0	7.68	<5.0
Hexachlorobenzene	157	ND	D032	0.13	<0.025	<0.025	<0.025	<0.025	<0.025	<0.025
Hexachlorobutadiene	158	ND	D033	0.5	<0.10	<0.10	<0.10	<0.10	<0.10	0.22638
Hexachloroethane	158	ND	D034	3	<1.0	<1.0	<1.0	<1.0	<1.0	<1.0
Nitrobenzene	157	ND	D036	2	<0.40	<0.40	<0.40	<0.40	<0.40	<0.40
Pentachlorophenol	157	ND	D037	100	<5.0	<5.0	<5.0	<5.0	<5.0	<5.0
Pyridine	157	ND	D038	5	<1.0	<1.0	<1.0	<1.0	<1.0	<1.0
METALS										
Arsenic	158	ND	D004	5	<5.00	<5.00	<5.00	<5.00	<5.00	<5.00
Barium	158	2.42	D005	100	<5.00	5.26	5.19	<5.00	<5.00	5.35
Cadmium	158	ND	D006	1	<0.500	<0.500	<0.500	<0.500	<0.500	**3.80**
Chromium	158	ND	D007	5	<0.500	<0.500	<0.500	<0.500	<0.500	3.80
Lead	158	ND	D008	5	<4.00	**6.99**	**7.55**	**19.9**	<4.00	**76.2**
Mercury	158	ND	D009	0.2	<0.040	<0.040	<0.040	<0.040	<0.10	<0.10
Selenium	158	ND	D010	1	<0.45	<0.45	<0.45	<0.45	<0.45	<0.45
Silver	158	ND	D011	5	<0.500	<0.500	<0.500	<0.500	<0.500	<0.500
Misc										
Flash Point	157	138	D001	140	158	**127**	**128**	158	**102**	**136**
pH	161	7.2	D002	2-12.5	6.97	6.78	6.96	6.87	7.05	5.66
VOA										
1,1-Dichloroethylene	158	ND	D029	0.7	<0.40	<0.40	<0.40	<0.40	<0.40	<0.40
1,2-Dichloroethane	158	ND	D028	0.5	<0.20	<0.20	<0.20	<0.20	<0.20	<0.20
1,4-Dichlorobenzene	158	ND	D027	7.5	2.5	<0.50	<0.50	0.64	<0.50	<0.50
Benzene	158	ND	D018	0.5	**1.3**	**19.5**	**18.2**	**1.2**	**141**	**1.8**
Carbon Tetrachloride	158	ND	D019	0.5	<0.20	<0.20	<0.20	<0.20	<0.20	<0.20
Chlorobenzene	158	ND	D021	100	<0.20	<0.20	<0.20	<0.20	<0.20	<0.20
Chloroform	158	ND	D022	6	<0.20	<0.20	<0.20	<0.20	<0.20	<0.20
Methyl Ethyl Ketone	158	ND	D035	200	1	<0.50	<0.50	0.59	1.8	2.1
Tetrachloroethylene	158	828	D039	0.7	**790**	**412**	**416**	**703**	**668**	**225**
Trichloroethylene	158	14.4	D040	0.5	**10.4**	**4.4**	**4.3**	**12.6**	**22.1**	<0.20
Vinyl Chloride	158	ND	D043	0.2	<0.15	<0.15	<0.15	<0.15	<0.15	<0.15

PWS 105

				Sample Number	2145820	C2F210338001	C2G090262001	C2G090262001R2	C2I230216001	C2I230216001X	C2I230221001
				Year	2002	2002	2002	2002	2002	2002	2002
Analysis	Number of Samples	90 UCL for the 50th Percentile	Waste Code	Reg Limit	Farmington,NM	Pineville,LA	Albuquerque,NM	Albuquerque,NM	Eagan,MN	Eagan,MN	Eagan,MN
BNA											
2,4,5-Trichlorophenol	157	ND	D041	400	<5.0	<<<<<<0.05	<<<<<<0.05		0.34		0.17
2,4,6-Trichlorophenol	157	ND	D042	2	<2.0	<<<<<<0.05	<<<<<<0.05		<<<<<<0.05		0.051
2,4-Dinitrotoluene	157	ND	D030	0.13	<0.13	<<<<<<0.05	<<<<<<0.05		<<<<<<0.05		<<<<<<0.05
2-Methylphenol	157	ND	D023	200	<5.0	<<<<<<0.05	0.34		1.2		1.8
3+4-Methylphenol	157	ND	D024/25	200	<5.0	<<<<<<0.05	0.74		2.1		2.3
Hexachlorobenzene	157	ND	D032	0.13	<0.025	<<<<<<0.025	<<<<<<0.025		<<<<<<0.025		<<<<<<0.025
Hexachlorobutadiene	158	ND	D033	0.5	<0.10	<<<<<<0.1	<<<<<<0.1		0.1		<<<<<<0.1
Hexachloroethane	158	ND	D034	3	<1.0	<<<<<<1	<<<<<<1		<<<<<<1		<<<<<<1
Nitrobenzene	157	ND	D036	2	<0.40	<<<<<<0.05	<<<<<<0.05		<<<<<<0.05		<<<<<<0.05
Pentachlorophenol	157	ND	D037	100	<5.0	<<<<<<3	<<<<<<3		<<<<<<3		<<<<<<3
Pyridine	157	ND	D038	5	<1.0	<<<<<<0.05	<<<<<<0.05		<<<<<<0.05		0.078
METALS											
Arsenic	158	ND	D004	5	<5.00	<<<<<<1	<<<<<<1		<<<<<<1		<<<<<<1
Barium	158	2.42	D005	100	<5.00	<<<<<<20	<<<<<<20		<<<<<<20		<<<<<<20
Cadmium	158	ND	D006	1	<0.500	<<<<<<0.5	<<<<<<0.5		<<<<<<0.5		<<<<<<0.5
Chromium	158	ND	D007	5	<0.500	<<<<<<0.5	<<<<<<0.5		<<<<<<0.5		<<<<<<0.5
Lead	158	ND	D008	5	<4.00	11.1	3.2		5.7		3.3
Mercury	158	ND	D009	0.2	<0.10	<<<<<<0.033	<<<<<<0.033		<<<<<<0.033		<<<<<<0.033
Selenium	158	ND	D010	1	<0.45	<<<<<<0.5	<<<<<<0.5		0.5		<<<<<<0.5
Silver	158	ND	D011	5	<0.500	<<<<<<0.5	<<<<<<0.5		<<<<<<0.5		<<<<<<0.5
Misc											
Flash Point	157	138	D001	140	154	81.5	159			147	146
pH	161	7.2	D002	2-12.5	6.78	7.4	8		7.8		
VOA											
1,1-Dichloroethylene	158	ND	D029	0.7	<0.40	<<<<<<1.2	<<<<<<0.25		<<<<<<10		<<<<<<0.25
1,2-Dichloroethane	158	ND	D028	0.5	<0.20	<<<<<<1.2	<<<<<<0.25		<<<<<<10		<<<<<<0.25
1,4-Dichlorobenzene	158	ND	D027	7.5	<0.50	<<<<<<1.2	0.39		<<<<<<10		2.1
Benzene	158	ND	D018	0.5	<0.20	5.9	<<<<<<0.25		16		
Carbon Tetrachloride	158	ND	D019	0.5	<0.20	<<<<<<1.2	<<<<<<0.25		<<<<<<10		<<<<<<0.25
Chlorobenzene	158	ND	D021	100	<0.20	<<<<<<1.2	<<<<<<0.25		<<<<<<10		<<<<<<0.25
Chloroform	158	ND	D022	6	<0.20	<<<<<<5	<<<<<<1		<<<<<<40		<<<<<<1
Methyl Ethyl Ketone	158	ND	D035	200	<0.50	<<<<<<1.2	0.28		<<<<<<10		4.7
Tetrachloroethylene	158	828	D039	0.7	210	140		230	1100		
Trichloroethylene	158	14.4	D040	0.5	<0.20	1.5	<<<<<<0.25		57		
Vinyl Chloride	158	ND	D043	0.2	<0.15	<<<<<<0.5	<<<<<<0.1		<<<<<<4		<<<<<<0.1

PWS 105

				Sample Number	C2I230221001R2	C2I230221001X	C2J010125001	C2J010125001R2	C2J010145001	C2J010145001R2	C2J010312001
				Year	2002	2002	2002	2002	2002	2002	2002
Analysis	Number of Samples	90 UCL for the 50th Percentile	Waste Code	Reg Limit	Eagan,MN	Eagan,MN	Clackamas,OR	Clackamas,OR	St_ Charles,MO	St_ Charles,MO	Gering,NE
BNA											
2,4,5-Trichlorophenol	157	ND	D041	400				<<<<<<0.2	0.16		0.1
2,4,6-Trichlorophenol	157	ND	D042	2				<<<<<<0.2	<<<<<<0.05		<<<<<<0.05
2,4-Dinitrotoluene	157	ND	D030	0.13				<<<<<<0.2	<<<<<<0.05		<<<<<<0.05
2-Methylphenol	157	ND	D023	200				0.81	1.2		4.8
3+4-Methylphenol	157	ND	D024/25	200				8.2	2.6		6.9
Hexachlorobenzene	157	ND	D032	0.13			<<<<<<0.025		<<<<<<0.025		<<<<<<0.025
Hexachlorobutadiene	158	ND	D033	0.5			<<<<<<0.1		<<<<<<0.1		<<<<<<0.1
Hexachloroethane	158	ND	D034	3			<<<<<<1		<<<<<<1		<<<<<<1
Nitrobenzene	157	ND	D036	2				0.59	<<<<<<0.05		<<<<<<0.05
Pentachlorophenol	157	ND	D037	100				<<<<<<12	<<<<<<3		<<<<<<3
Pyridine	157	ND	D038	5				<<<<<<0.2	0.059		<<<<<<0.05
METALS											
Arsenic	158	ND	D004	5			<<<<<<1		<<<<<<1		<<<<<<1
Barium	158	2.42	D005	100			<<<<<<20		<<<<<<20		<<<<<<20
Cadmium	158	ND	D006	1			**3.4**		<<<<<<0.5		<<<<<<0.5
Chromium	158	ND	D007	5			<<<<<<0.5		0.81		<<<<<<0.5
Lead	158	ND	D008	5			**32.1**		**10.5**		1.8
Mercury	158	ND	D009	0.2			<<<<<<0.033		<<<<<<0.033		0.037
Selenium	158	ND	D010	1			<<<<<<0.5		<<<<<<0.5		<<<<<<0.5
Silver	158	ND	D011	5			<<<<<<0.5		<<<<<<0.5		<<<<<<0.5
Misc											
Flash Point	157	138	D001	140			**136**		156		**95.7**
pH	161	7.2	D002	2-12.5		8	7.2		8.7		6.4
VOA											
1,1-Dichloroethylene	158	ND	D029	0.7				<<<<<<500	<<<<<<0.5		
1,2-Dichloroethane	158	ND	D028	0.5				<<<<<<500	<<<<<<0.5		
1,4-Dichlorobenzene	158	ND	D027	7.5				<<<<<<500	1.5		
Benzene	158	ND	D018	0.5	**18**			<<<<<<500	<<<<<<0.5		
Carbon Tetrachloride	158	ND	D019	0.5				<<<<<<500	<<<<<<0.5		
Chlorobenzene	158	ND	D021	100				<<<<<<500	0.59		
Chloroform	158	ND	D022	6				<<<<<<2000	<<<<<<2		
Methyl Ethyl Ketone	158	ND	D035	200				<<<<<<500	0.55		
Tetrachloroethylene	158	828	D039	0.7	**1100**			**4000**		**700**	
Trichloroethylene	158	14.4	D040	0.5	**58**			<<<<<<500	**16**		
Vinyl Chloride	158	ND	D043	0.2				<<<<<<200	<<<<<<0.2		

PWS 105

Analysis	Number of Samples	90 UCL for the 50th Percentile	Waste Code	Reg Limit	C2J010312001R2	C2J040337001	C2J040337001R2	C2J150194001	C2J150194001R2	C2J150205001
				Year	2002	2002	2002	2002	2002	2002
					Gering,NE	Grand Island,NE	Grand Island,NE	Syracuse,NY	Syracuse,NY	Syracuse,NY
BNA										
2,4,5-Trichlorophenol	157	ND	D041	400		0.16		0.14		
2,4,6-Trichlorophenol	157	ND	D042	2		<<<<<<0.05		0.081		
2,4-Dinitrotoluene	157	ND	D030	0.13		<<<<<<0.05		0.12		
2-Methylphenol	157	ND	D023	200		2		3.7		
3+4-Methylphenol	157	ND	D024/25	200		2.8		4.7		
Hexachlorobenzene	157	ND	D032	0.13		<<<<<<0.025		<<<<<<0.025		<<<<<<0.025
Hexachlorobutadiene	158	ND	D033	0.5		<<<<<<0.1		<<<<<<0.1		<<<<<<0.1
Hexachloroethane	158	ND	D034	3		<<<<<<1		<<<<<<1		<<<<<<1
Nitrobenzene	157	ND	D036	2		<<<<<<0.05		<<<<<<0.05		
Pentachlorophenol	157	ND	D037	100		<<<<<<3		<<<<<<3		
Pyridine	157	ND	D038	5		0.086		0.13		
METALS										
Arsenic	158	ND	D004	5		<<<<<<1		<<<<<<1		<<<<<<1
Barium	158	2.42	D005	100		<<<<<<20		<<<<<<20		<<<<<<20
Cadmium	158	ND	D006	1		<<<<<<0.5		<<<<<<0.5		<<<<<<0.5
Chromium	158	ND	D007	5		<<<<<<0.5		<<<<<<0.5		0.73
Lead	158	ND	D008	5		2.9		**9.4**		**13.6**
Mercury	158	ND	D009	0.2		<<<<<<0.033		<<<<<<0.033		<<<<<<0.033
Selenium	158	ND	D010	1		<<<<<<0.5		<<<<<<0.5		<<<<<<0.5
Silver	158	ND	D011	5		<<<<<<0.5		<<<<<<0.5		<<<<<<0.5
Misc										
Flash Point	157	138	D001	140		>200		**111**		
pH	161	7.2	D002	2-12.5		6.9		7.8		7.2
VOA										
1,1-Dichloroethylene	158	ND	D029	0.7	<<<<<<25		<<<<<<5		<<<<<<25	
1,2-Dichloroethane	158	ND	D028	0.5	<<<<<<25		<<<<<<5		<<<<<<25	
1,4-Dichlorobenzene	158	ND	D027	7.5	<<<<<<25		<<<<<<5		<<<<<<25	
Benzene	158	ND	D018	0.5	**480**		<<<<<<5		<<<<<<25	
Carbon Tetrachloride	158	ND	D019	0.5	<<<<<<25		<<<<<<5		<<<<<<25	
Chlorobenzene	158	ND	D021	100	<<<<<<25		<<<<<<5		<<<<<<25	
Chloroform	158	ND	D022	6	<<<<<<100		<<<<<<20		<<<<<<100	
Methyl Ethyl Ketone	158	ND	D035	200	<<<<<<25		<<<<<<5		<<<<<<25	
Tetrachloroethylene	158	828	D039	0.7	**3600**		**690**		**3500**	
Trichloroethylene	158	14.4	D040	0.5	**33**		**43**		<<<<<<25	
Vinyl Chloride	158	ND	D043	0.2	<<<<<<10		<<<<<<2		<<<<<<10	

PWS 105

Analysis	Number of Samples	90 UCL for the 50th Percentile	Waste Code	Reg Limit	Syracuse,NY	Avon,NY	Avon,NY	Lackawanna,NY	Lackawanna,NY	Nepean,ON
				Sample Number	C2J150205001R2	C2J150221001	C2J150221001R2	C2J170162001	C2J170162001R2	C2J170212001
				Year	2002	2002	2002	2002	2002	2002
BNA										
2,4,5-Trichlorophenol	157	ND	D041	400	0.12	0.062		0.22		<<<<<<0.05
2,4,6-Trichlorophenol	157	ND	D042	2	<<<<<<0.1	0.11		0.06		<<<<<<0.05
2,4-Dinitrotoluene	157	ND	D030	0.13	<<<<<<0.1	**1.5**		<<<<<<0.05		<<<<<<0.05
2-Methylphenol	157	ND	D023	200	8.1	2.2		4.2		1.2
3+4-Methylphenol	157	ND	D024/25	200	5.5	3.2		4.1		2.2
Hexachlorobenzene	157	ND	D032	0.13		<<<<<<0.025		<<<<<<0.025		<<<<<<0.025
Hexachlorobutadiene	158	ND	D033	0.5		<<<<<<0.1		<<<<<<0.1		<<<<<<0.1
Hexachloroethane	158	ND	D034	3		<<<<<<1		<<<<<<1		<<<<<<1
Nitrobenzene	157	ND	D036	2	<<<<<<0.1	**3.1**		<<<<<<0.05		<<<<<<0.05
Pentachlorophenol	157	ND	D037	100	<<<<<<6	<<<<<<3		<<<<<<3		<<<<<<3
Pyridine	157	ND	D038	5	<<<<<<0.1	0.13		0.066		<<<<<<0.05
METALS										
Arsenic	158	ND	D004	5		<<<<<<1		<<<<<<1		<<<<<<1
Barium	158	2.42	D005	100		<<<<<<20		<<<<<<20		<<<<<<20
Cadmium	158	ND	D006	1		0.53		<<<<<<0.5		<<<<<<0.5
Chromium	158	ND	D007	5		<<<<<<0.5		<<<<<<0.5		0.87
Lead	158	ND	D008	5		**31.9**		0.55		1.4
Mercury	158	ND	D009	0.2		<<<<<<0.033		<<<<<<0.033		<<<<<<0.033
Selenium	158	ND	D010	1		<<<<<<0.5		<<<<<<0.5		<<<<<<0.5
Silver	158	ND	D011	5		<<<<<<0.5		<<<<<<0.5		<<<<<<0.5
Misc										
Flash Point	157	138	D001	140		143		**118**		**111**
pH	161	7.2	D002	2-12.5		7.3		7.9		8.4
VOA										
1,1-Dichloroethylene	158	ND	D029	0.7	<<<<<<12		<<<<<<5		<<<<<<5	
1,2-Dichloroethane	158	ND	D028	0.5	<<<<<<12		<<<<<<5		<<<<<<5	
1,4-Dichlorobenzene	158	ND	D027	7.5	<<<<<<12		<<<<<<5		<<<<<<5	
Benzene	158	ND	D018	0.5	<<<<<<12		<<<<<<5		<<<<<<5	
Carbon Tetrachloride	158	ND	D019	0.5	<<<<<<12		<<<<<<5		<<<<<<5	
Chlorobenzene	158	ND	D021	100	<<<<<<12		<<<<<<5		<<<<<<5	
Chloroform	158	ND	D022	6	<<<<<<50		<<<<<<20		<<<<<<20	
Methyl Ethyl Ketone	158	ND	D035	200	<<<<<<12		<<<<<<5		<<<<<<5	
Tetrachloroethylene	158	828	D039	0.7	**910**		**270**		**260**	
Trichloroethylene	158	14.4	D040	0.5	**15**		<<<<<<5		**6.2**	
Vinyl Chloride	158	ND	D043	0.2	<<<<<<5		<<<<<<2		<<<<<<2	

PWS 105

Analysis	Number of Samples	90 UCL for the 50th Percentile	Waste Code	Reg Limit	Nepean,ON	St_ Charles,MO	Salt Lake City,UT	Salt Lake City,UT	Salt Lake City,UT	Cohoes,NY
				Sample Number	C2J170212001R2	C2K010350001	C2K060118001	C2K060118001R2	C2K060118001X	C2K060324001
				Year	2002	2002	2002	2002	2002	2002
BNA										
2,4,5-Trichlorophenol	157	ND	D041	400		<<<<<<0.05	<<<<<<0.05			<<<<<<0.05
2,4,6-Trichlorophenol	157	ND	D042	2		<<<<<<0.05	<<<<<<0.05			<<<<<<0.05
2,4-Dinitrotoluene	157	ND	D030	0.13		<<<<<<0.05	<<<<<<0.05			0.058
2-Methylphenol	157	ND	D023	200		1	1.3			5.3
3+4-Methylphenol	157	ND	D024/25	200		0.76	3.7			6.5
Hexachlorobenzene	157	ND	D032	0.13		<<<<<<0.025	<<<<<<0.025			<<<<<<0.025
Hexachlorobutadiene	158	ND	D033	0.5		<<<<<<0.1	<<<<<<0.1			<<<<<<0.1
Hexachloroethane	158	ND	D034	3		<<<<<<1	<<<<<<1			<<<<<<1
Nitrobenzene	157	ND	D036	2		<<<<<<0.05	<<<<<<0.05			<<<<<<0.05
Pentachlorophenol	157	ND	D037	100		<<<<<<3	<<<<<<3			<<<<<<3
Pyridine	157	ND	D038	5		<<<<<<0.05	0.12			<<<<<<0.05
METALS										
Arsenic	158	ND	D004	5		<<<<<<1	<<<<<<1			<<<<<<1
Barium	158	2.42	D005	100		<<<<<<20	<<<<<<20			<<<<<<20
Cadmium	158	ND	D006	1		3.1	<<<<<<0.5			<<<<<<0.5
Chromium	158	ND	D007	5		1.1	<<<<<<0.5			<<<<<<0.5
Lead	158	ND	D008	5		13	6.9			3.4
Mercury	158	ND	D009	0.2		<<<<<<0.033	<<<<<<0.033			<<<<<<0.033
Selenium	158	ND	D010	1		<<<<<<0.5	<<<<<<0.5			<<<<<<0.5
Silver	158	ND	D011	5		<<<<<<0.5	<<<<<<0.5			<<<<<<0.5
Misc										
Flash Point	157	138	D001	140		108	112			116
pH	161	7.2	D002	2-12.5		8			3.9	7.8
VOA										
1,1-Dichloroethylene	158	ND	D029	0.7	<<<<<<10	<<<<<<0.5		<<<<<<5		
1,2-Dichloroethane	158	ND	D028	0.5	<<<<<<10	<<<<<<0.5		<<<<<<5		
1,4-Dichlorobenzene	158	ND	D027	7.5	<<<<<<10	<<<<<<0.5		<<<<<<5		
Benzene	158	ND	D018	0.5	<<<<<<10	<<<<<<0.5		<<<<<<5		
Carbon Tetrachloride	158	ND	D019	0.5	<<<<<<10	<<<<<<0.5		<<<<<<5		
Chlorobenzene	158	ND	D021	100	<<<<<<10	<<<<<<0.5		<<<<<<5		
Chloroform	158	ND	D022	6	<<<<<<40	<<<<<<2		<<<<<<20		
Methyl Ethyl Ketone	158	ND	D035	200	<<<<<<10	2.7		8.5		
Tetrachloroethylene	158	828	D039	0.7	700	<<<<<<0.5		570		
Trichloroethylene	158	14.4	D040	0.5	12	<<<<<<0.5		14		
Vinyl Chloride	158	ND	D043	0.2	<<<<<<4	<<<<<<0.2		<<<<<<2		

PWS 105

Analysis	Number of Samples	90 UCL for the 50th Percentile	Waste Code	Reg Limit	C2K060324001R2	C2K070126001	C2K070126001R2	C2K070131001	C2K070131001R2	C2K080247001	C2K080247001R2
				Year	2002	2002	2002	2002	2002	2002	2002
					Cohoes,NY	Cohoes,NY	Cohoes,NY	Cohoes,NY	Cohoes,NY	Oshawa,ON	Oshawa,ON
BNA											
2,4,5-Trichlorophenol	157	ND	D041	400		<<<<<<0.05		<<<<<<0.05		<<<<<<0.05	
2,4,6-Trichlorophenol	157	ND	D042	2		<<<<<<0.05		<<<<<<0.05		<<<<<<0.05	
2,4-Dinitrotoluene	157	ND	D030	0.13		<<<<<<0.05		<<<<<<0.05		<<<<<<0.05	
2-Methylphenol	157	ND	D023	200		4.9		4.1		4.2	
3+4-Methylphenol	157	ND	D024/25	200		5.5		4.3		5.2	
Hexachlorobenzene	157	ND	D032	0.13		<<<<<<0.025		<<<<<<0.025		<<<<<<0.025	
Hexachlorobutadiene	158	ND	D033	0.5		<<<<<<0.1		<<<<<<0.1		<<<<<<0.1	
Hexachloroethane	158	ND	D034	3		<<<<<<1		<<<<<<1		<<<<<<1	
Nitrobenzene	157	ND	D036	2		<<<<<<0.05		<<<<<<0.05		0.1	
Pentachlorophenol	157	ND	D037	100		<<<<<<3		<<<<<<3		<<<<<<3	
Pyridine	157	ND	D038	5		<<<<<<0.05		<<<<<<0.05		<<<<<<0.05	
METALS											
Arsenic	158	ND	D004	5		<<<<<<1		<<<<<<1		<<<<<<1	
Barium	158	2.42	D005	100		<<<<<<20		<<<<<<20		<<<<<<20	
Cadmium	158	ND	D006	1		<<<<<<0.5		<<<<<<0.5		<<<<<<0.5	
Chromium	158	ND	D007	5		<<<<<<0.5		<<<<<<0.5		<<<<<<0.5	
Lead	158	ND	D008	5		2.2		2.6		4.7	
Mercury	158	ND	D009	0.2		<<<<<<0.033		<<<<<<0.033		<<<<<<0.033	
Selenium	158	ND	D010	1		<<<<<<0.5		<<<<<<0.5		<<<<<<0.5	
Silver	158	ND	D011	5		<<<<<<0.5		<<<<<<0.5		<<<<<<0.5	
Misc											
Flash Point	157	138	D001	140		**110**		**108**		111	
pH	161	7.2	D002	2-12.5		8.3		8.1		8.2	
VOA											
1,1-Dichloroethylene	158	ND	D029	0.7	<<<<<<5		<<<<<<5		<<<<<<10		<<<<<<5
1,2-Dichloroethane	158	ND	D028	0.5	<<<<<<5		<<<<<<5		<<<<<<10		<<<<<<5
1,4-Dichlorobenzene	158	ND	D027	7.5	<<<<<<5		<<<<<<5		<<<<<<10		<<<<<<5
Benzene	158	ND	D018	0.5	<<<<<<5		**12**		<<<<<<10		<<<<<<5
Carbon Tetrachloride	158	ND	D019	0.5	<<<<<<5		<<<<<<5		<<<<<<10		<<<<<<5
Chlorobenzene	158	ND	D021	100	<<<<<<5		<<<<<<5		<<<<<<10		<<<<<<5
Chloroform	158	ND	D022	6	<<<<<<20		<<<<<<20		<<<<<<40		<<<<<<20
Methyl Ethyl Ketone	158	ND	D035	200	<<<<<<5		<<<<<<5		<<<<<<10		<<<<<<5
Tetrachloroethylene	158	828	D039	0.7	**530**		**490**		**1300**		**380**
Trichloroethylene	158	14.4	D040	0.5	**7.5**		**5.2**		<<<<<<10		<<<<<<5
Vinyl Chloride	158	ND	D043	0.2	<<<<<<2		<<<<<<2		<<<<<<4		<<<<<<2

PWS 105

Analysis	Number of Samples	90 UCL for the 50th Percentile	Waste Code	Reg Limit	C2K130291001	C2K130291001R2	C2K140127001	C2K140127001R2	C2K140127001X	C2K140146001
				Year	2002	2002	2002	2002	2002	2002
					Rohnert Park,CA	Rohnert Park,CA	Sacramento,CA	Sacramento,CA	Sacramento,CA	Oakland,CA
BNA										
2,4,5-Trichlorophenol	157	ND	D041	400		<<<<<0.2	0.21			<<<<<0.05
2,4,6-Trichlorophenol	157	ND	D042	2		<<<<<0.2	<<<<<0.05			<<<<<0.05
2,4-Dinitrotoluene	157	ND	D030	0.13		<<<<<0.2	<<<<<0.05			<<<<<0.05
2-Methylphenol	157	ND	D023	200		0.98	2.5			0.8
3+4-Methylphenol	157	ND	D024/25	200		3.4	2.2			3.2
Hexachlorobenzene	157	ND	D032	0.13	<<<<<0.025		<<<<<0.025			<<<<<0.025
Hexachlorobutadiene	158	ND	D033	0.5	<<<<<0.1		<<<<<0.1			<<<<<0.1
Hexachloroethane	158	ND	D034	3	<<<<<1		<<<<<1			<<<<<1
Nitrobenzene	157	ND	D036	2		<<<<<0.2	<<<<<0.05			<<<<<0.05
Pentachlorophenol	157	ND	D037	100		<<<<<12	<<<<<3			<<<<<3
Pyridine	157	ND	D038	5		<<<<<0.2	<<<<<0.05			<<<<<0.05
METALS										
Arsenic	158	ND	D004	5	<<<<<1		<<<<<1			<<<<<1
Barium	158	2.42	D005	100	<<<<<20		<<<<<20			<<<<<20
Cadmium	158	ND	D006	1	<<<<<0.5		<<<<<0.5			<<<<<0.5
Chromium	158	ND	D007	5	<<<<<0.5		<<<<<0.5			<<<<<0.5
Lead	158	ND	D008	5	1.7		1.9			2.8
Mercury	158	ND	D009	0.2	<<<<<0.033		<<<<<0.033			<<<<<0.033
Selenium	158	ND	D010	1	<<<<<0.5		<<<<<0.5			<<<<<0.5
Silver	158	ND	D011	5	<<<<<0.5		<<<<<0.5			<<<<<0.5
Misc										
Flash Point	157	138	D001	140	**120**		**120**			**110**
pH	161	7.2	D002	2-12.5	6.8				8.6	7.3
VOA										
1,1-Dichloroethylene	158	ND	D029	0.7		<<<<<5		<<<<<5		
1,2-Dichloroethane	158	ND	D028	0.5		<<<<<5		<<<<<5		
1,4-Dichlorobenzene	158	ND	D027	7.5		<<<<<5		<<<<<20		
Benzene	158	ND	D018	0.5		<<<<<5		<<<<<5		
Carbon Tetrachloride	158	ND	D019	0.5		<<<<<5		<<<<<5		
Chlorobenzene	158	ND	D021	100		<<<<<5		<<<<<5		
Chloroform	158	ND	D022	6		<<<<<20		<<<<<20		
Methyl Ethyl Ketone	158	ND	D035	200		<<<<<5		<<<<<20		
Tetrachloroethylene	158	828	D039	0.7		**550**		**310**		
Trichloroethylene	158	14.4	D040	0.5		**14**		**9.9**		
Vinyl Chloride	158	ND	D043	0.2		<<<<<2		<<<<<2		

PWS 105

				Sample Number	C2K140146001R2	C2K140281001	C2K140281001R2	C2K150378001	C2K150378001R2	C2K220111001
				Year	2002	2002	2002	2002	2002	2002
Analysis	Number of Samples	90 UCL for the 50th Percentile	Waste Code	Reg Limit	Oakland,CA	Santa Anna,CA	Santa Anna,CA	Wichita,KS	Wichita,KS	Omaha,NE
BNA										
2,4,5-Trichlorophenol	157	ND	D041	400		<<<<<0.05		<<<0.05		<<0.05
2,4,6-Trichlorophenol	157	ND	D042	2		<<<<<0.05		0.073		0.19
2,4-Dinitrotoluene	157	ND	D030	0.13		<<<<<0.05		<<<0.05		**0.16**
2-Methylphenol	157	ND	D023	200		0.58		0.5		3
3+4-Methylphenol	157	ND	D024/25	200		2.5		1.3		3.2
Hexachlorobenzene	157	ND	D032	0.13		<<<<<0.025		<<<0.025		<<0.025
Hexachlorobutadiene	158	ND	D033	0.5		<<<<<0.1		<<<0.1		<<0.1
Hexachloroethane	158	ND	D034	3		<<<<<1		<<<1		<<1
Nitrobenzene	157	ND	D036	2		<<<<<0.05		<<<0.05		0.86
Pentachlorophenol	157	ND	D037	100		<<<<<3		<<<3		<<3
Pyridine	157	ND	D038	5		<<<<<0.05		<<<0.05		<<0.05
METALS										
Arsenic	158	ND	D004	5		<<<<<1		<<<1		<<1
Barium	158	2.42	D005	100		<<<<<20		<<<20		24.1
Cadmium	158	ND	D006	1		<<<<<0.5		<<<0.5		1.3
Chromium	158	ND	D007	5		<<<<<0.5		<<<0.5		0.59
Lead	158	ND	D008	5		1.1		1.4		4.3
Mercury	158	ND	D009	0.2		<<<<<0.033		<<<0.033		<<0.033
Selenium	158	ND	D010	1		<<<<<0.5		<<<0.5		<<0.5
Silver	158	ND	D011	5		<<<<<0.5		<<<0.5		<<0.5
Misc										
Flash Point	157	138	D001	140		113		116		111
pH	161	7.2	D002	2-12.5		7.7		7.2		5.3
VOA										
1,1-Dichloroethylene	158	ND	D029	0.7	<<<<<5		<<<<<5		<<<5	
1,2-Dichloroethane	158	ND	D028	0.5	<<<<<5		<<<<<5		<<<5	
1,4-Dichlorobenzene	158	ND	D027	7.5	<<<<<20		<<<<<20		<<<20	
Benzene	158	ND	D018	0.5	<<<<<5		<<<<<5		<<<5	
Carbon Tetrachloride	158	ND	D019	0.5	<<<<<5		<<<<<5		<<<5	
Chlorobenzene	158	ND	D021	100	<<<<<5		<<<<<5		<<<5	
Chloroform	158	ND	D022	6	<<<<<20		<<<<<20		<<<20	
Methyl Ethyl Ketone	158	ND	D035	200	<<<<<20		<<<<<20		<<<20	
Tetrachloroethylene	158	828	D039	0.7	**520**		**420**		**390**	
Trichloroethylene	158	14.4	D040	0.5	**36**		**13**		**14**	
Vinyl Chloride	158	ND	D043	0.2	<<<<<2		<<<<<2		<<<2	

PWS 105

				Sample Number	C2K220111001R2	C2L100284001	C2L100284001R2
				Year	2002	2002	2002
Analysis	Number of Samples	90 UCL for the 50th Percentile	Waste Code	Reg Limit	Omaha,NE	Farmington,NM	Farmington,NM
BNA							
2,4,5-Trichlorophenol	157	ND	D041	400		<0.05	
2,4,6-Trichlorophenol	157	ND	D042	2		<0.05	
2,4-Dinitrotoluene	157	ND	D030	0.13		<0.05	
2-Methylphenol	157	ND	D023	200		2.2	
3+4-Methylphenol	157	ND	D024/25	200		2	
Hexachlorobenzene	157	ND	D032	0.13		<0.025	
Hexachlorobutadiene	158	ND	D033	0.5		<0.1	
Hexachloroethane	158	ND	D034	3		<1	
Nitrobenzene	157	ND	D036	2		1.3	
Pentachlorophenol	157	ND	D037	100		<3	
Pyridine	157	ND	D038	5		<0.05	
METALS							
Arsenic	158	ND	D004	5		<1	
Barium	158	2.42	D005	100		<20	
Cadmium	158	ND	D006	1		<0.5	
Chromium	158	ND	D007	5		<0.5	
Lead	158	ND	D008	5		0.64	
Mercury	158	ND	D009	0.2		<0.033	
Selenium	158	ND	D010	1		<0.5	
Silver	158	ND	D011	5		<0.5	
Misc							
Flash Point	157	138	D001	140		**119**	
pH	161	7.2	D002	2-12.5		7.2	
VOA							
1,1-Dichloroethylene	158	ND	D029	0.7	<<5		<5
1,2-Dichloroethane	158	ND	D028	0.5	<<5		<5
1,4-Dichlorobenzene	158	ND	D027	7.5	<<20		<20
Benzene	158	ND	D018	0.5	<<5		<5
Carbon Tetrachloride	158	ND	D019	0.5	<<5		<5
Chlorobenzene	158	ND	D021	100	<<5		<5
Chloroform	158	ND	D022	6	<<20		<20
Methyl Ethyl Ketone	158	ND	D035	200	<<20		<20
Tetrachloroethylene	158	828	D039	0.7	**200**		**620**
Trichloroethylene	158	14.4	D040	0.5	<<5		**10**
Vinyl Chloride	158	ND	D043	0.2	<<2		<2

PWS 150

Analysis	Number of Samples	90 UCL for the 50th Percentile	Waste Code	Reg Limit	Denton,TX	Gering,NE	Albuquerque,NM	Lackawanna,NY	Lackawanna,NY	Lackawanna,NY	Syracuse,NY
				Sample Number	2009202	2011424	2015443	2015468	2015472	2015505	2015607
				Year	2000	2000	2000	2000	2000	2000	2000
BNA											
2,4,5-Trichlorophenol	112	ND	D041	400	<5.0	<5.0	<5.0	<5.0	<5.0	<5.0	<5.0
2,4,6-Trichlorophenol	112	ND	D042	2	<2.0	<2.0	<2.0	<2.0	<2.0	<2.0	<2.0
2,4-Dinitrotoluene	112	ND	D030	0.13	<0.13	<0.13	<0.13	<0.13	<0.13	<0.13	<0.13
2-Methylphenol	112	ND	D023	200	<5.0	<5.0	<5.0	<5.0	<5.0	<5.0	<5.0
3+4-Methylphenol	112	ND	D024/25	200	<5.0	<5.0	<5.0	<5.0	<5.0	<5.0	<5.0
Hexachlorobenzene	112	ND	D032	0.13	<0.0050	<0.0050	<0.0050	<0.0050	<0.0050	<0.0050	0.010796
Hexachlorobutadiene	112	ND	D033	0.5	<0.020	<0.020	<0.020	<0.020	<0.020	<0.020	<0.020
Hexachloroethane	112	ND	D034	3	<0.20	<0.20	<0.20	<0.20	<0.20	<0.20	<0.20
Nitrobenzene	112	ND	D036	2	<0.40	<0.40	<0.40	<0.40	<0.40	<0.40	<0.40
Pentachlorophenol	112	ND	D037	100	<5.0	<5.0	<5.0	<5.0	<5.0	<5.0	<5.0
Pyridine	112	ND	D038	5	<1.0	<1.0	<1.0	<1.0	<1.0	<1.0	<1.0
METALS											
Arsenic	113	ND	D004	5	<5.00	<5.00	<5.00	<5.00	<5.00	<5.00	<5.00
Barium	112	1.90	D005	100	<0.500	<0.500	<0.500	<0.500	<0.500	<0.500	<0.500
Cadmium	112	ND	D006	1	<0.500	<0.500	<0.500	<0.500	<0.500	<0.500	<0.500
Chromium	112	ND	D007	5	<0.500	<0.500	<0.500	<0.500	<0.500	<0.500	<0.500
Lead	112	ND	D008	5	<4.00	4.34	<4.00	<4.00	<4.00	<4.00	<4.00
Mercury	112	ND	D009	0.2	<0.10	<0.10	<0.040	<0.040	<0.040	<0.10	<0.10
Selenium	112	ND	D010	1	<0.45	<0.45	<0.008	<0.008	<0.008	<0.45	<0.45
Silver	112	ND	D011	5	<0.500	<0.500	<0.500	<0.500	<0.500	<0.500	<0.500
Misc											
Flash Point	106	156	D001	140	158	164	153	158	161	159	164
pH	109	7.18	D002	2-12.5	7.2	9.4	6.8	7.0	6.6	6.6	7.1
VOA											
1,1-Dichloroethylene	112	ND	D029	0.7	<0.40	<0.40	<0.40	<4.0	<4.0	<4.0	<4.0
1,2-Dichloroethane	112	ND	D028	0.5	<0.20	<0.20	<0.20	<2.0	<2.0	<2.0	<2.0
1,4-Dichlorobenzene	112	ND	D027	7.5	<0.50	<0.50	<0.50	<5.0	<5.0	<5.0	<5.0
Benzene	112	ND	D018	0.5	<0.20	<0.20	0.23	<2.0	<2.0	<2.0	<2.0
Carbon Tetrachloride	112	ND	D019	0.5	<0.20	<0.20	<0.20	<2.0	<2.0	<2.0	<2.0
Chlorobenzene	112	ND	D021	100	<0.20	<0.20	<0.20	<2.0	<2.0	<2.0	<2.0
Chloroform	112	ND	D022	6	<0.20	<0.20	<0.20	<2.0	<2.0	<2.0	<2.0
Methyl Ethyl Ketone	112	ND	D035	200	<0.50	<0.50	<0.50	<5.0	<5.0	<5.0	<5.0
Tetrachloroethylene	112	28.6	D039	0.7	<0.20	<0.20	<0.20	**5100**	**5170**	**5760**	**2920**
Trichloroethylene	112	ND	D040	0.5	<0.20	<0.20	<0.20	<2.0	<2.0	<2.0	<2.0
Vinyl Chloride	112	ND	D043	0.2	<0.15	<0.15	<0.15	<1.5	<1.5	<1.5	<1.5

PWS 150

				Sample Number	2015609	2015611	2017074	2017075	2017076	2017077
				Year	2000	2000	2000	2000	2000	2000
Analysis	Number of Samples	90 UCL for the 50th Percentile	Waste Code	Reg Limit	Syracuse,NY	Syracuse,NY	No_ Amityville,NY	No_ Amityville,NY	No_ Amityville,NY	No_ Amityville,NY
BNA										
2,4,5-Trichlorophenol	112	ND	D041	400	<5.0	<5.0	<5.0	<5.0	<5.0	<5.0
2,4,6-Trichlorophenol	112	ND	D042	2	<2.0	<2.0	<2.0	<2.0	<2.0	<2.0
2,4-Dinitrotoluene	112	ND	D030	0.13	<0.13	<0.13	<0.13	<0.13	<0.13	<0.13
2-Methylphenol	112	ND	D023	200	<5.0	<5.0	<5.0	<5.0	<5.0	<5.0
3+4-Methylphenol	112	ND	D024/25	200	<5.0	<5.0	<5.0	<5.0	<5.0	<5.0
Hexachlorobenzene	112	ND	D032	0.13	0.009367	0.013648	<0.025	<0.025	<0.025	<0.0050
Hexachlorobutadiene	112	ND	D033	0.5	<0.020	<0.020	<0.020	<0.020	<0.020	<0.020
Hexachloroethane	112	ND	D034	3	<0.20	<0.20	<0.20	<0.20	<0.20	<0.20
Nitrobenzene	112	ND	D036	2	<0.40	<0.40	<0.40	<0.40	<0.40	<0.40
Pentachlorophenol	112	ND	D037	100	<5.0	<5.0	<5.0	<5.0	<5.0	<5.0
Pyridine	112	ND	D038	5	<1.0	<1.0	<1.0	<1.0	<1.0	<1.0
METALS										
Arsenic	113	ND	D004	5	<5.00	<5.00	<5.00	<5.00	<5.00	<5.00
Barium	112	1.90	D005	100	6.88	7.80	<0.500	<0.500	<0.500	<0.500
Cadmium	112	ND	D006	1	<0.500	<0.500	<0.500	<0.500	<0.500	<0.500
Chromium	112	ND	D007	5	<0.500	0.549	<0.500	<0.500	<0.500	<0.500
Lead	112	ND	D008	5	<4.00	<4.00	<4.00	<4.00	<4.00	<4.00
Mercury	112	ND	D009	0.2	<0.10	<0.10	<0.10	<0.10	<0.10	<0.10
Selenium	112	ND	D010	1	<0.45	<0.45	<0.45	<0.45	<0.45	<0.45
Silver	112	ND	D011	5	<0.500	<0.500	<0.500	<0.500	<0.500	<0.500
Misc										
Flash Point	106	156	D001	140	158	164	160	158	161	156
pH	109	7.18	D002	2-12.5	7.4	7.5	7.4	7.4	7.8	7.8
VOA										
1,1-Dichloroethylene	112	ND	D029	0.7	<0.40	<4.0	<0.40	<0.40	<0.40	<0.40
1,2-Dichloroethane	112	ND	D028	0.5	<0.20	<2.0	<0.20	<0.20	<0.20	<0.20
1,4-Dichlorobenzene	112	ND	D027	7.5	0.81	<5.0	<0.50	<0.50	<0.50	<0.50
Benzene	112	ND	D018	0.5	1.4	<2.0	0.26	0.23	<0.20	0.22
Carbon Tetrachloride	112	ND	D019	0.5	<0.20	<2.0	<0.20	<0.20	<0.20	<0.20
Chlorobenzene	112	ND	D021	100	<0.20	<2.0	<0.20	<0.20	<0.20	<0.20
Chloroform	112	ND	D022	6	<0.20	<2.0	<0.20	<0.20	<0.20	<0.20
Methyl Ethyl Ketone	112	ND	D035	200	<0.50	<5.0	<0.50	<0.50	<0.50	<0.50
Tetrachloroethylene	112	28.6	D039	0.7	**13.2**	**335**	**3.2**	**3.3**	**4.6**	**3.2**
Trichloroethylene	112	ND	D040	0.5	<0.20	**26.5**	<0.20	<0.20	**0.59**	<0.20
Vinyl Chloride	112	ND	D043	0.2	<0.15	<1.5	<0.15	<0.15	<0.15	<0.15

PWS 150

Analysis	Number of Samples	90 UCL for the 50th Percentile	Waste Code	Reg Limit	Edwardsville,KS	Cohoes,NY	Cohoes,NY	Cohoes,NY	Wichita,KS	Avon,NY	Pineville,LA	St_Charles,MO
				Sample Number	2017364	2017904	2017906	2017908	2018172	2022090	2039382	2045078
				Year	2000	2000	2000	2000	2000	2000	2000	2000
BNA												
2,4,5-Trichlorophenol	112	ND	D041	400	<5.0	<5.0	<5.0	<5.0	<5.0	<5.0	<5.0	<5.0
2,4,6-Trichlorophenol	112	ND	D042	2	<2.0	<2.0	<2.0	<2.0	<2.0	<2.0	<2.0	<2.0
2,4-Dinitrotoluene	112	ND	D030	0.13	<0.13	<0.13	<0.13	<0.13	<0.13	<0.13	<0.13	<0.13
2-Methylphenol	112	ND	D023	200	<5.0	<5.0	<5.0	<5.0	<5.0	<5.0	<5.0	<5.0
3+4-Methylphenol	112	ND	D024/25	200	<5.0	<5.0	<5.0	<5.0	<5.0	<5.0	<5.0	<5.0
Hexachlorobenzene	112	ND	D032	0.13	<0.025	<0.025	<0.025	<0.025	<0.0050	<0.025	<0.025	<0.025
Hexachlorobutadiene	112	ND	D033	0.5	<0.020	<0.020	<0.020	<0.020	<0.020	<0.10	<0.10	<0.10
Hexachloroethane	112	ND	D034	3	<0.20	<0.20	<0.20	<0.20	<0.20	<1.0	<1.0	<1.0
Nitrobenzene	112	ND	D036	2	<0.40	<0.40	<0.40	<0.40	<0.40	<0.40	<0.40	<0.40
Pentachlorophenol	112	ND	D037	100	<5.0	<5.0	<5.0	<5.0	<5.0	<5.0	<5.0	<5.0
Pyridine	112	ND	D038	5	<1.0	<1.0	<1.0	<1.0	<1.0	<1.0	<1.0	<1.0
METALS												
Arsenic	113	ND	D004	5	<5.00	<5.00	<5.00	<5.00	<5.00	<5.00	<5.00	<5.00
Barium	112	1.90	D005	100	<0.500	10.1	1.08	6.32	0.733	6.13	<0.500	<0.500
Cadmium	112	ND	D006	1	<0.500	<0.500	<0.500	<0.500	<0.500	<0.500	<0.500	0.528
Chromium	112	ND	D007	5	<0.500	<0.500	<0.500	<0.500	<0.500	<0.500	<0.500	<0.500
Lead	112	ND	D008	5	<4.00	<4.00	<4.00	<4.00	<4.00	**14.5**	<4.00	<4.00
Mercury	112	ND	D009	0.2	<0.10	<0.10	<0.10	<0.10	<0.040	<0.040	<0.10	<0.10
Selenium	112	ND	D010	1	<0.45	<0.45	<0.45	<0.45	<0.008	<0.008	<0.45	<0.45
Silver	112	ND	D011	5	<0.500	<0.500	<0.500	<0.500	<0.500	<0.500	<0.500	<0.500
Misc												
Flash Point	106	156	D001	140	160	160	167	157	153	**100**	154	155
pH	109	7.18	D002	2-12.5	7.2	4.6	5.8	8.4	4.89	6.7	7.23	7.14
VOA												
1,1-Dichloroethylene	112	ND	D029	0.7	<0.40	<0.40	<0.40	<4.0	<4.0	<4.0	<0.40	<0.40
1,2-Dichloroethane	112	ND	D028	0.5	<0.20	<0.20	<0.20	<2.0	<2.0	<2.0	<0.20	<0.20
1,4-Dichlorobenzene	112	ND	D027	7.5	1.2	0.77	1.4	<5.0	<5.0	5.2	<0.50	0.9
Benzene	112	ND	D018	0.5	<0.20	<0.20	<0.20	<2.0	**4**	<2.0	**0.61**	<0.20
Carbon Tetrachloride	112	ND	D019	0.5	<0.20	<0.20	<0.20	<2.0	<2.0	<2.0	<0.20	<0.20
Chlorobenzene	112	ND	D021	100	<0.20	<0.20	<0.20	<2.0	<2.0	<2.0	<0.20	<0.20
Chloroform	112	ND	D022	6	<0.20	<0.20	<0.20	<2.0	<2.0	<2.0	<0.20	<0.20
Methyl Ethyl Ketone	112	ND	D035	200	<0.50	<0.50	<0.50	<5.0	<5.0	<5.0	<0.50	<0.50
Tetrachloroethylene	112	28.6	D039	0.7	**8.9**	**30**	0.28	**2950**	**1590**	**4160**	<0.20	0.24
Trichloroethylene	112	ND	D040	0.5	**1.8**	**1.5**	<0.20	**2.6**	**10.6**	**57.9**	<0.20	<0.20
Vinyl Chloride	112	ND	D043	0.2	<0.15	<0.15	<0.15	<1.5	<1.5	<1.5	<0.15	<0.15

PWS 150

Analysis	Number of Samples	90 UCL for the 50th Percentile	Waste Code	Reg Limit	Ashland,KY	Ashland,KY	Lexington,KY	Farmington,NM	Lexington,KY	Lexington,KY	Lexington,KY	Lexington,KY
				Sample Number	2046598	2046603	2049651	2051061	2051523	2051525	2051528	2051529
				Year	2000	2000	2000	2000	2000	2000	2000	2000
BNA												
2,4,5-Trichlorophenol	112	ND	D041	400	<5.0	<5.0	<5.0	<5.0	<5.0	<10.0	<10.0	<5.0
2,4,6-Trichlorophenol	112	ND	D042	2	<2.0	<2.0	<2.0	<2.0	<2.0	<4.0	<4.0	<2.0
2,4-Dinitrotoluene	112	ND	D030	0.13	<0.13	<0.13	<0.13	<0.13	<0.13	<0.26	<0.26	<0.13
2-Methylphenol	112	ND	D023	200	<5.0	<5.0	<5.0	<5.0	<5.0	<10.0	<10.0	<5.0
3+4-Methylphenol	112	ND	D024/25	200	<5.0	<5.0	<5.0	<5.0	<5.0	<10.0	<10.0	<5.0
Hexachlorobenzene	112	ND	D032	0.13	<0.025	<0.025	<0.025	<0.025	<0.025	<0.025	<0.025	<0.025
Hexachlorobutadiene	112	ND	D033	0.5	<0.10	<0.10	<0.10	<0.10	<0.10	<0.10	<0.10	<0.10
Hexachloroethane	112	ND	D034	3	<1.0	<1.0	<1.0	<1.0	<1.0	<1.0	<1.0	<1.0
Nitrobenzene	112	ND	D036	2	<0.40	<0.40	<0.40	<0.40	<0.40	<0.80	<0.80	<0.40
Pentachlorophenol	112	ND	D037	100	<5.0	<5.0	<5.0	<5.0	<5.0	<10.0	<10.0	<5.0
Pyridine	112	ND	D038	5	<1.0	<1.0	<1.0	<1.0	<1.0	<2.0	<2.0	<1.0
METALS												
Arsenic	113	ND	D004	5	<5.00	<5.00	<5.00	<5.00	<5.00	<5.00	<5.00	<5.00
Barium	112	1.90	D005	100	2.88	4.39	<0.500	3.56	43.5	<0.500	<0.500	0.539
Cadmium	112	ND	D006	1	<0.500	<0.500	<0.500	0.586	<0.500	<0.500	<0.500	<0.500
Chromium	112	ND	D007	5	<0.500	<0.500	<0.500	<0.500	<0.500	<0.500	<0.500	<0.500
Lead	112	ND	D008	5	<4.00	<4.00	<4.00	**5.25**	<4.00	<4.00	<4.00	<4.00
Mercury	112	ND	D009	0.2	<0.10	<0.10	<0.10	<0.10	<0.10	<0.10	<0.10	<0.10
Selenium	112	ND	D010	1	<0.45	<0.45	<0.45	<0.45	<0.45	<0.45	<0.45	<0.45
Silver	112	ND	D011	5	<0.500	<0.500	<0.500	<0.500	<0.500	<0.500	<0.500	<0.500
Misc												
Flash Point	106	156	D001	140	158	154	154	160	152	152	163	155
pH	109	7.18	D002	2-12.5	6.9	7.86	6.99	5.32	7.3	7.45	7.09	7.25
VOA												
1,1-Dichloroethylene	112	ND	D029	0.7	<0.40	<0.40	<0.80	<0.80	<0.40	<0.40	<0.40	<0.40
1,2-Dichloroethane	112	ND	D028	0.5	<0.20	<0.20	<0.40	<0.40	<0.20	<0.20	<0.20	<0.20
1,4-Dichlorobenzene	112	ND	D027	7.5	<0.50	1.1	1.8	<1.0	0.91	1.5	1.5	1.2
Benzene	112	ND	D018	0.5	<0.20	<0.20	<0.40	<0.40	<0.20	<0.20	0.26	<0.20
Carbon Tetrachloride	112	ND	D019	0.5	<0.20	<0.20	<0.40	<0.40	<0.20	<0.20	<0.20	<0.20
Chlorobenzene	112	ND	D021	100	<0.20	<0.20	<0.40	<0.40	<0.20	<0.20	<0.20	<0.20
Chloroform	112	ND	D022	6	<0.20	<0.20	<0.40	<0.40	<0.20	<0.20	<0.20	<0.20
Methyl Ethyl Ketone	112	ND	D035	200	<0.50	<0.50	<1.0	<1.0	<0.50	<0.50	<0.50	<0.50
Tetrachloroethylene	112	28.6	D039	0.7	0.39	**29.2**	**0.98**	**11300**	**536**	**0.81**	0.21	<0.20
Trichloroethylene	112	ND	D040	0.5	<0.20	0.33	<0.40	<0.40	<0.20	<0.20	<0.20	<0.20
Vinyl Chloride	112	ND	D043	0.2	<0.15	<0.15	<0.30	<0.30	<0.15	<0.15	<0.15	<0.15

PWS 150

Analysis	Number of Samples	90 UCL for the 50th Percentile	Waste Code	Reg Limit	Morrow,GA	Lexington,KY	Lexington,KY	Lexington,KY	Ashland,KY	Dodge City,KS	Longview,TX	Boynton Beach,FL
				Sample Number	2054244	2054685	2054688	2054689	2054692	2056272	2056649	2057491
				Year	2000	2000	2000	2000	2000	2000	2000	2000
BNA												
2,4,5-Trichlorophenol	112	ND	D041	400	<200	<5.0	<5.0	<5.0	<5.0	<5.0	<5.0	<5.0
2,4,6-Trichlorophenol	112	ND	D042	2	<200	<2.0	<2.0	<2.0	<2.0	<2.0	<2.0	<2.0
2,4-Dinitrotoluene	112	ND	D030	0.13	<40	<0.13	<0.13	<0.13	<0.13	<0.13	<0.13	<0.13
2-Methylphenol	112	ND	D023	200	<200	<5.0	<5.0	<5.0	<5.0	<5.0	<5.0	<5.0
3+4-Methylphenol	112	ND	D024/25	200	<200	<5.0	<5.0	<5.0	<5.0	<5.0	<5.0	<5.0
Hexachlorobenzene	112	ND	D032	0.13	<40	<0.025	<0.025	<0.025	<0.025	<0.025	<0.025	<0.025
Hexachlorobutadiene	112	ND	D033	0.5	<200	<0.10	<0.10	<0.10	<0.10	<0.10	<0.10	<0.10
Hexachloroethane	112	ND	D034	3	<200	<1.0	<1.0	<1.0	<1.0	<1.0	<1.0	<1.0
Nitrobenzene	112	ND	D036	2	<200	<0.40	<0.40	<0.40	<0.40	<0.40	<0.40	<0.40
Pentachlorophenol	112	ND	D037	100	<200	<5.0	<5.0	<5.0	<5.0	<5.0	<5.0	<5.0
Pyridine	112	ND	D038	5	<210	<1.0	<1.0	<1.0	<1.0	<1.0	<1.0	<1.5
METALS												
Arsenic	113	ND	D004	5	<5.00	<5.00	<5.00	<5.00	<5.00	<5.00	<5.00	<5.00
Barium	112	1.90	D005	100	3.27	<0.500	0.507	<0.500	7.5	<0.500	0.919	<0.500
Cadmium	112	ND	D006	1	<0.500	<0.500	<0.500	<0.500	<0.500	<0.500	<0.500	<0.500
Chromium	112	ND	D007	5	<0.500	<0.500	<0.500	<0.500	<0.500	<0.500	<0.500	<0.500
Lead	112	ND	D008	5	<4.00	<4.00	<4.00	<4.00	<4.00	<4.00	<4.00	<4.00
Mercury	112	ND	D009	0.2	<0.10	<0.10	<0.10	<0.10	<0.10	<0.1	<0.10	<0.10
Selenium	112	ND	D010	1	<0.45	<0.45	<0.45	<0.45	<0.45	<0.45	<0.45	<0.45
Silver	112	ND	D011	5	<0.500	<0.500	<0.500	<0.500	<0.500	<0.500	<0.500	<0.500
Misc												
Flash Point	106	156	D001	140	160	158	154	156	154	146	162	160
pH	109	7.18	D002	2-12.5	7.38	7.56	7.94	7.7	7.44	4.44	6.56	6.62
VOA												
1,1-Dichloroethylene	112	ND	D029	0.7	<0.40	<0.40	<0.40	<0.40	<0.40	<0.40	<0.40	<0.40
1,2-Dichloroethane	112	ND	D028	0.5	<0.20	<0.20	<0.20	<0.20	<0.20	<0.20	<0.20	<0.20
1,4-Dichlorobenzene	112	ND	D027	7.5	0.8	1	0.74	0.78	1.5	<0.50	4.1	0.96
Benzene	112	ND	D018	0.5	3.1	<0.20	0.22	<0.20	<0.20	**133**	<0.20	<0.20
Carbon Tetrachloride	112	ND	D019	0.5	<0.20	<0.20	<0.20	<0.20	<0.20	<0.20	<0.20	<0.20
Chlorobenzene	112	ND	D021	100	<0.20	<0.20	<0.20	<0.20	<0.20	<0.20	<0.20	<0.20
Chloroform	112	ND	D022	6	<0.20	<0.20	<0.20	<0.20	<0.20	<0.20	<0.20	<0.20
Methyl Ethyl Ketone	112	ND	D035	200	<0.50	<0.50	0.56	<0.50	<0.50	<0.50	<0.50	<0.50
Tetrachloroethylene	112	28.6	D039	0.7	**149**	0.53	**1.2**	**1.8**	0.61	**1250**	<0.20	**4920**
Trichloroethylene	112	ND	D040	0.5	<0.20	**5.4**	<0.20	<0.20	<0.20	**128**	**0.71**	**9.6**
Vinyl Chloride	112	ND	D043	0.2	<0.15	<0.15	<0.15	<0.15	<0.15	<0.15	<0.15	<0.15

PWS 150

Analysis	Number of Samples	90 UCL for the 50th Percentile	Waste Code	Reg Limit	Ashland,KY	Sacramento,CA	Rohnert Park,CA	Gering,NE	Cohoes,NY	Cohoes,NY	Cohoes,NY	Denton,TX
				Sample Number	2058155	2066751	2067124	2075109	2075382	2075384	2075447	2075705
				Year	2000	2000	2000	2001	2001	2001	2001	2001
BNA												
2,4,5-Trichlorophenol	112	ND	D041	400	<5.0	<10.0	<5.0	<5.0	<5.0	<5.0	<5.0	<5.0
2,4,6-Trichlorophenol	112	ND	D042	2	<2.0	<4.0	<2.0	<2.0	<2.0	<2.0	<2.0	<2.0
2,4-Dinitrotoluene	112	ND	D030	0.13	<0.13	<0.26	<0.13	<0.13	<0.13	<0.13	<0.13	<0.13
2-Methylphenol	112	ND	D023	200	<5.0	<10.0	<5.0	<5.0	<5.0	<5.0	<5.0	<5.0
3+4-Methylphenol	112	ND	D024/25	200	<5.0	<10.0	<5.0	<5.0	<5.0	<5.0	<5.0	<5.0
Hexachlorobenzene	112	ND	D032	0.13	<0.025	<0.025	<0.025	<0.025	<0.025	<0.025	<0.025	<0.025
Hexachlorobutadiene	112	ND	D033	0.5	<0.10	<0.10	<0.10	<0.10	<0.10	<0.10	<0.10	<0.10
Hexachloroethane	112	ND	D034	3	<1.0	<1.0	<1.0	<1.0	<1.0	<1.0	<1.0	<1.0
Nitrobenzene	112	ND	D036	2	<0.40	<0.80	<0.40	<0.40	<0.40	<0.40	<0.40	<0.40
Pentachlorophenol	112	ND	D037	100	<5.0	<10.0	<5.0	<5.0	<5.0	<5.0	<5.0	<5.0
Pyridine	112	ND	D038	5	<1.0	<2.0	<1.0	<1.0	<1.0	<1.0	<1.0	<1.0
METALS												
Arsenic	113	ND	D004	5	<5.00	<5.00	<5.00	<5.00	<5.00	<5.00	<5.00	<5.00
Barium	112	1.90	D005	100	<0.500	0.846	<0.500	2.32	<0.500	<0.500	<0.500	<0.500
Cadmium	112	ND	D006	1	<0.500	<0.500	<0.500	0.582	<0.500	<0.500	<0.500	<0.500
Chromium	112	ND	D007	5	<0.500	<0.500	<0.500	<0.500	<0.500	<0.500	<0.500	<0.500
Lead	112	ND	D008	5	<4.00	<4.00	**6.65**	<4.00	<4.00	<4.00	<4.00	<4.00
Mercury	112	ND	D009	0.2	<0.100	<0.10	<0.10	<0.100	<0.10	<0.10	<0.10	<0.10
Selenium	112	ND	D010	1	<0.45	<0.45	<0.45	<0.45	<0.45	<0.45	<0.45	<0.45
Silver	112	ND	D011	5	<0.500	<0.500	<0.500	<0.500	<0.500	<0.500	<0.500	<0.500
Misc												
Flash Point	106	156	D001	140	156	163	163	148	163	160	161	155
pH	109	7.18	D002	2-12.5	4.54	6.64	7.18	7.22	6.65	6.21	6.81	6.89
VOA												
1,1-Dichloroethylene	112	ND	D029	0.7	<0.80	<0.40	<0.80	<1.6	<1.6	<1.6	<1.6	<0.40
1,2-Dichloroethane	112	ND	D028	0.5	<0.40	<0.20	<0.40	<0.80	<0.80	<0.80	<0.80	<0.20
1,4-Dichlorobenzene	112	ND	D027	7.5	1.5	<0.50	<1.0	4.5	<2.0	<2.0	<2.0	<0.50
Benzene	112	ND	D018	0.5	<0.40	<0.20	<0.40	<0.80	<0.80	<0.80	<0.80	<0.20
Carbon Tetrachloride	112	ND	D019	0.5	<0.40	<0.20	<0.40	<0.80	<0.80	<0.80	<0.80	<0.20
Chlorobenzene	112	ND	D021	100	<0.40	<0.20	<0.40	<0.80	<0.80	<0.80	<0.80	<0.20
Chloroform	112	ND	D022	6	<0.40	<0.20	<0.40	<0.80	<0.80	<0.80	<0.80	<0.20
Methyl Ethyl Ketone	112	ND	D035	200	<1.0	<0.50	<1.0	4.3	<2.0	<2.0	<2.0	<0.50
Tetrachloroethylene	112	28.6	D039	0.7	**2.1**	**3.9**	**1.9**	**502**	**1.5**	**1.4**	**1.4**	<0.20
Trichloroethylene	112	ND	D040	0.5	<0.40	<0.20	<0.40	**568**	<0.80	<0.80	<0.80	<0.20
Vinyl Chloride	112	ND	D043	0.2	<0.30	<0.15	<0.30	<0.60	<0.60	<0.60	<0.60	<0.15

PWS 150

				Sample Number	2077301	2077306	2078383	2078387	2078401	2081037	2081043	2081045
				Year	2001	2001	2001	2001	2001	2001	2001	2001
Analysis	Number of Samples	90 UCL for the 50th Percentile	Waste Code	Reg Limit	Blaine,MN	Blaine,MN	Orange,TX	Orange,TX	Omaha,NE	Lackawanna,NY	Lackawanna,NY	Lackawanna,NY
BNA												
2,4,5-Trichlorophenol	112	ND	D041	400	<5.0	<5.0	<5.0	<5.0	<5.0	<5.0	<5.0	<5.0
2,4,6-Trichlorophenol	112	ND	D042	2	<2.0	<2.0	<2.0	<2.0	<2.0	<2.0	<2.0	<2.0
2,4-Dinitrotoluene	112	ND	D030	0.13	<0.13	<0.13	<0.13	<0.13	<0.13	<0.13	<0.13	<0.13
2-Methylphenol	112	ND	D023	200	<5.0	<5.0	<5.0	<5.0	<5.0	<5.0	<5.0	<5.0
3+4-Methylphenol	112	ND	D024/25	200	<5.0	<5.0	<5.0	<5.0	<5.0	<5.0	<5.0	<5.0
Hexachlorobenzene	112	ND	D032	0.13	<0.025	<0.025	<0.025	<0.025	<0.025	<0.025	<0.025	<0.025
Hexachlorobutadiene	112	ND	D033	0.5	<0.10	<0.10	<0.10	<0.10	<0.10	<0.10	<0.10	<0.10
Hexachloroethane	112	ND	D034	3	<1.0	<1.0	<1.0	<1.0	<1.0	<1.0	<1.0	<1.0
Nitrobenzene	112	ND	D036	2	<0.40	<0.40	<0.40	<0.40	<0.40	<0.40	<0.40	<0.40
Pentachlorophenol	112	ND	D037	100	<5.0	<5.0	<5.0	<5.0	<5.0	<5.0	<5.0	<5.0
Pyridine	112	ND	D038	5	<1.0	<1.0	<1.0	<1.0	<1.0	<1.0	<1.0	<1.0
METALS												
Arsenic	113	ND	D004	5	<5.00	<5.00	<5.00	<5.00	<5.00	<5.00	<5.00	<5.00
Barium	112	1.90	D005	100	1.90	1.09	5.81	<0.500	4.53	<0.500	<0.500	<0.500
Cadmium	112	ND	D006	1	<0.500	<0.500	0.700	<0.500	<0.500	<0.500	<0.500	<0.500
Chromium	112	ND	D007	5	<0.500	<0.500	<0.500	<0.500	<0.500	<0.500	<0.500	<0.500
Lead	112	ND	D008	5	4.53	<4.00	**5.14**	<4.00	<4.00	<4.00	**13.7**	<4.00
Mercury	112	ND	D009	0.2	<0.10	<0.10	<0.10	<0.10	<0.10	<0.10	<0.10	<0.10
Selenium	112	ND	D010	1	<0.45	<0.45	<0.45	<0.45	<0.45	<0.45	<0.45	<0.45
Silver	112	ND	D011	5	<0.500	<0.500	<0.500	<0.500	<0.500	<0.500	<0.500	<0.500
Misc												
Flash Point	106	156	D001	140	154	157	157	156	156	>200	158	158
pH	109	7.18	D002	2-12.5	7.39	6.27	6.87	6.93	7.02	6.76	6.89	6.27
VOA												
1,1-Dichloroethylene	112	ND	D029	0.7	<1.6	<1.6	<2.0	<0.40	<1.6	<0.40	<0.40	<0.40
1,2-Dichloroethane	112	ND	D028	0.5	<0.80	<0.80	<1.0	<0.20	<0.80	<0.20	<0.20	<0.20
1,4-Dichlorobenzene	112	ND	D027	7.5	2.6	2.6	<2.5	<0.50	3.6	1.6	<0.50	2.1
Benzene	112	ND	D018	0.5	**3**	**2.9**	**9.8**	<0.20	<0.80	<0.20	<0.20	<0.20
Carbon Tetrachloride	112	ND	D019	0.5	<0.80	<0.80	<1.0	<0.20	<0.80	<0.20	<0.20	<0.20
Chlorobenzene	112	ND	D021	100	<0.80	<0.80	<1.0	<0.20	<0.80	<0.20	<0.20	<0.20
Chloroform	112	ND	D022	6	<0.80	<0.80	<1.0	<0.20	<0.80	<0.20	<0.20	<0.20
Methyl Ethyl Ketone	112	ND	D035	200	<2.0	<2.0	<2.5	<0.50	<2.0	<0.50	<0.50	<0.50
Tetrachloroethylene	112	28.6	D039	0.7	**2.3**	**2.2**	**122**	0.36	**172**	0.43	0.45	0.53
Trichloroethylene	112	ND	D040	0.5	<0.80	<0.80	**4.3**	<0.20	<0.80	<0.20	<0.20	<0.20
Vinyl Chloride	112	ND	D043	0.2	<0.60	<0.60	<0.75	<0.15	<0.60	<0.15	<0.15	<0.15

PWS 150

				Sample Number	2082490	2082496	2083422	2083431	2083435	2083713
				Year	2001	2001	2001	2001	2001	2001
Analysis	Number of Samples	90 UCL for the 50th Percentile	Waste Code	Reg Limit	Albuquerque,NM	Grand Island,NE	Syracuse,NY	Syracuse,NY	Syracuse,NY	No_ Amityville,NY
BNA										
2,4,5-Trichlorophenol	112	ND	D041	400	<300	<5.0	<5.0	<5.0	<5.0	<5.0
2,4,6-Trichlorophenol	112	ND	D042	2	<300	<2.0	<2.0	<2.0	<2.0	<2.0
2,4-Dinitrotoluene	112	ND	D030	0.13	<40	<0.13	<0.13	<0.13	<0.13	<0.13
2-Methylphenol	112	ND	D023	200	<400	<5.0	<5.0	<5.0	<5.0	<5.0
3+4-Methylphenol	112	ND	D024/25	200	<500	<5.0	<5.0	<5.0	<5.0	<5.0
Hexachlorobenzene	112	ND	D032	0.13	<40	<0.025	<0.025	<0.025	<0.025	<0.025
Hexachlorobutadiene	112	ND	D033	0.5	<100	<0.10	<0.10	<0.10	<0.10	<0.10
Hexachloroethane	112	ND	D034	3	<200	<1.0	<1.0	<1.0	<1.0	<1.0
Nitrobenzene	112	ND	D036	2	<200	<0.40	<0.40	<0.40	<0.40	<0.40
Pentachlorophenol	112	ND	D037	100	<520	<5.0	<5.0	<5.0	<5.0	<5.0
Pyridine	112	ND	D038	5	<580	<1.0	<1.0	<1.0	<1.0	<1.0
METALS										
Arsenic	113	ND	D004	5	<5.00	<5.00	<5.00	<5.00	<5.00	<5.00
Barium	112	1.90	D005	100	<0.500	0.680	<0.500	<0.500	2.41	0.845
Cadmium	112	ND	D006	1	<0.500	<0.500	<0.500	<0.500	<0.500	<0.500
Chromium	112	ND	D007	5	<0.500	<0.500	<0.500	<0.500	<0.500	<0.500
Lead	112	ND	D008	5	4.34	<4.00	<4.00	<4.00	<4.00	<4.00
Mercury	112	ND	D009	0.2	<0.10	<0.10	<0.10	<0.10	<0.10	<0.10
Selenium	112	ND	D010	1	<0.45	<0.45	<0.45	<0.45	<0.45	<0.45
Silver	112	ND	D011	5	<0.500	<0.500	<0.500	<0.500	<0.500	<0.500
Misc										
Flash Point	106	156	D001	140	**95**	159	154	143	148	168
pH	109	7.18	D002	2-12.5	9.00	8.32	7.35	4.69	7.18	10.34
VOA										
1,1-Dichloroethylene	112	ND	D029	0.7	<1.6	<0.40	<0.40	<0.40	<0.40	<0.40
1,2-Dichloroethane	112	ND	D028	0.5	<0.80	<0.20	<0.20	<0.20	<0.20	<0.20
1,4-Dichlorobenzene	112	ND	D027	7.5	**93**	1.4	0.79	0.84	0.74	0.62
Benzene	112	ND	D018	0.5	**63.1**	<0.20	<0.20	<0.20	**0.7**	1
Carbon Tetrachloride	112	ND	D019	0.5	<0.80	<0.20	<0.20	<0.20	<0.20	<0.20
Chlorobenzene	112	ND	D021	100	12.7	<0.20	<0.20	<0.20	<0.20	<0.20
Chloroform	112	ND	D022	6	<0.80	<0.20	<0.20	<0.20	<0.20	<0.20
Methyl Ethyl Ketone	112	ND	D035	200	2.2	0.56	<0.50	<0.50	<0.50	<0.50
Tetrachloroethylene	112	28.6	D039	0.7	**68.4**	**0.72**	<0.20	0.41	0.5	**608**
Trichloroethylene	112	ND	D040	0.5	**4.5**	**43.7**	<0.20	<0.20	<0.20	**0.6**
Vinyl Chloride	112	ND	D043	0.2	<0.60	<0.15	<0.15	<0.15	<0.15	<0.15

PWS 150

Analysis	Number of Samples	90 UCL for the 50th Percentile	Waste Code	Reg Limit	No_ Amityville,NY	No_ Amityville,NY	Clackamas,OR	Oklahoma City,OK	Tulsa,OK	Longview,TX	Pineville,LA
				Sample Number	2083715	2083719	2085316	2090897	2091977	2092408	2093900
				Year	2001	2001	2001	2001	2001	2001	2001
BNA											
2,4,5-Trichlorophenol	112	ND	D041	400	<5.0	<5.0	<5.0	<5.0	<5.0	<5.0	<5.0
2,4,6-Trichlorophenol	112	ND	D042	2	<2.0	<2.0	<2.0	<2.0	<2.0	<2.0	<2.0
2,4-Dinitrotoluene	112	ND	D030	0.13	<0.13	<0.13	<0.13	<0.13	<0.13	<0.13	<0.13
2-Methylphenol	112	ND	D023	200	<5.0	<5.0	<5.0	<5.0	<5.0	<5.0	<5.0
3+4-Methylphenol	112	ND	D024/25	200	<5.0	<5.0	<5.0	<5.0	<5.0	<5.0	<5.0
Hexachlorobenzene	112	ND	D032	0.13	<0.025	<0.025	<0.025	<0.025	<0.025	<0.025	<0.025
Hexachlorobutadiene	112	ND	D033	0.5	<0.10	<0.10	<0.10	<0.10	<0.10	<0.10	<0.10
Hexachloroethane	112	ND	D034	3	<1.0	<1.0	<1.0	<1.0	<1.0	<1.0	<1.0
Nitrobenzene	112	ND	D036	2	<0.40	<0.40	<0.40	<0.40	<0.40	<0.40	<0.40
Pentachlorophenol	112	ND	D037	100	<5.0	<5.0	<5.0	<5.0	<5.0	<5.0	<5.0
Pyridine	112	ND	D038	5	<1.0	<1.0	<1.0	<1.0	<1.0	<1.0	<1.0
METALS											
Arsenic	113	ND	D004	5	<5.00	<5.00	<5.00	<5.00	<5.00	<5.00	<5.00
Barium	112	1.90	D005	100	2.07	2.14	<0.500	<0.500	3.08	1.56	1.59
Cadmium	112	ND	D006	1	0.510	<0.500	<0.500	<0.500	<0.500	<0.500	0.720
Chromium	112	ND	D007	5	<0.500	<0.500	<0.500	0.784	<0.500	<0.500	<0.500
Lead	112	ND	D008	5	<4.00	4.06	<4.00	<4.00	<4.00	4.95	<4.00
Mercury	112	ND	D009	0.2	<0.10	<0.100	<0.10	<0.10	<0.10	<0.100	<0.10
Selenium	112	ND	D010	1	<0.45	<0.45	<0.45	<0.45	<0.45	<0.45	<0.45
Silver	112	ND	D011	5	<0.500	<0.500	<0.500	<0.500	<0.500	<0.500	<0.500
Misc											
Flash Point	106	156	D001	140	162	148	156	156	160	164	166
pH	109	7.18	D002	2-12.5	9.52	7.72	6.44	6.21	6.62	5.70	7.92
VOA											
1,1-Dichloroethylene	112	ND	D029	0.7	<1.6	<1.6	<0.40	<2.0	<0.80	<0.40	<1.6
1,2-Dichloroethane	112	ND	D028	0.5	<0.80	<0.80	<0.20	<1.0	<0.40	<0.20	<0.80
1,4-Dichlorobenzene	112	ND	D027	7.5	<2.0	<2.0	<0.50	<2.5	<1.0	<0.50	<2.0
Benzene	112	ND	D018	0.5	<0.80	**1.5**	<0.20	**1**	**0.8**	<0.20	<0.80
Carbon Tetrachloride	112	ND	D019	0.5	<0.80	<0.80	<0.20	<1.0	<0.40	<0.20	<0.80
Chlorobenzene	112	ND	D021	100	<0.80	<0.80	<0.20	<1.0	<0.40	<0.20	<0.80
Chloroform	112	ND	D022	6	<0.80	<0.80	<0.20	<1.0	<0.40	<0.20	<0.80
Methyl Ethyl Ketone	112	ND	D035	200	<2.0	<2.0	<0.50	<2.5	<1.0	3.2	2.6
Tetrachloroethylene	112	28.6	D039	0.7	**116**	**774**	0.37	**3.2**	**12.4**	**8**	**497**
Trichloroethylene	112	ND	D040	0.5	**630**	**1.8**	<0.20	**164**	**2**	<0.20	<0.80
Vinyl Chloride	112	ND	D043	0.2	<0.60	<0.60	<0.15	<0.75	<0.30	<0.15	<0.60

PWS 150

				Sample Number	2094175	2094383	2097348	2100674	2107128	2107905	2107909	2107914
				Year	2001	2001	2001	2001	2001	2001	2001	2001
Analysis	Number of Samples	90 UCL for the 50th Percentile	Waste Code	Reg Limit	Farmington,NM	St_ Charles,MO	Avon,NY	Dodge City,KS	Ashland,KY	Ashland,KY	Ashland,KY	Ashland,KY
BNA												
2,4,5-Trichlorophenol	112	ND	D041	400	<5.0	<5.0	<5.0	<5.0	<5.0	<5.0	<5.0	<5.0
2,4,6-Trichlorophenol	112	ND	D042	2	<2.0	<2.0	<2.0	<2.0	<2.0	<2.0	<2.0	<2.0
2,4-Dinitrotoluene	112	ND	D030	0.13	<0.13	<0.13	<0.13	<0.13	<0.13	<0.13	<0.13	<0.13
2-Methylphenol	112	ND	D023	200	<5.0	<5.0	<5.0	<5.0	<5.0	<5.0	<5.0	<5.0
3+4-Methylphenol	112	ND	D024/25	200	<5.0	<5.0	<5.0	<5.0	<5.0	<5.0	<5.0	<5.0
Hexachlorobenzene	112	ND	D032	0.13	<0.025	<0.025	<0.025	<0.025	<0.025	<0.025	<0.025	<0.025
Hexachlorobutadiene	112	ND	D033	0.5	<0.10	<0.10	<0.10	<0.10	<0.10	<0.10	0.24389	<0.10
Hexachloroethane	112	ND	D034	3	<1.0	<1.0	<1.0	<1.0	<1.0	<1.0	<1.0	<1.0
Nitrobenzene	112	ND	D036	2	<0.40	<0.40	<0.40	<0.40	<0.40	<0.40	<0.40	<0.40
Pentachlorophenol	112	ND	D037	100	<5.0	<5.0	<5.0	<5.0	<5.0	<5.0	<5.0	<5.0
Pyridine	112	ND	D038	5	<1.0	<1.0	<1.0	<1.0	<1.0	<1.0	<1.0	<1.0
METALS												
Arsenic	113	ND	D004	5	<5.00	<5.00	<5.00	<5.00	<5.00	<5.00	<5.00	<5.00
Barium	112	1.90	D005	100	<0.500	<0.500	<0.500	1.41	<0.500	<0.500	2.56	0.776
Cadmium	112	ND	D006	1	<0.500	<0.500	<0.500	0.686	<0.500	<0.500	<0.500	<0.500
Chromium	112	ND	D007	5	<0.500	<0.500	<0.500	<0.500	<0.500	<0.500	<0.500	<0.500
Lead	112	ND	D008	5	<4.00	<4.00	<4.00	4.08	<4.00	<4.00	4.94	<4.00
Mercury	112	ND	D009	0.2	<0.100	<0.10	<0.10	<0.10	<0.10	<0.10	<0.10	<0.10
Selenium	112	ND	D010	1	<0.45	<0.45	<0.45	<0.45	<0.45	<0.45	<0.45	<0.45
Silver	112	ND	D011	5	<0.500	<0.500	<0.500	<0.500	<0.500	<0.500	<0.500	<0.500
Misc												
Flash Point	106	156	D001	140	158	144	152	160	158	162	148	146
pH	109	7.18	D002	2-12.5	7.59	7.49	5.76	5.95	7.46	6.93	7.28	6.54
VOA												
1,1-Dichloroethylene	112	ND	D029	0.7	<0.40	<0.40	<0.40	<0.40	<0.40	<0.40	<2.0	<2.0
1,2-Dichloroethane	112	ND	D028	0.5	<0.20	<0.20	<0.20	<0.20	<0.20	<0.20	<1.0	<1.0
1,4-Dichlorobenzene	112	ND	D027	7.5	<0.50	1.2	0.99	0.63	0.9	1.3	4.3	<2.5
Benzene	112	ND	D018	0.5	0.24	0.3	<0.20	0.5	<0.20	<0.20	**4.1**	**86.7**
Carbon Tetrachloride	112	ND	D019	0.5	<0.20	<0.20	<0.20	<0.20	<0.20	<0.20	<1.0	<1.0
Chlorobenzene	112	ND	D021	100	<0.20	<0.20	<0.20	<0.20	<0.20	<0.20	<1.0	<1.0
Chloroform	112	ND	D022	6	<0.20	<0.20	<0.20	<0.20	<0.20	<0.20	<1.0	<1.0
Methyl Ethyl Ketone	112	ND	D035	200	1.2	1.1	1.2	<0.50	<0.50	0.76	<2.5	<2.5
Tetrachloroethylene	112	28.6	D039	0.7	**28.6**	0.22	0.41	**130**	**42.9**	**11.6**	**1180**	**7610**
Trichloroethylene	112	ND	D040	0.5	<0.20	<0.20	<0.20	**2**	<0.20	<0.20	**40.8**	**32.2**
Vinyl Chloride	112	ND	D043	0.2	<0.15	<0.15	<0.15	<0.15	<0.15	<0.15	<0.75	<0.75

PWS 150

Analysis	Number of Samples	90 UCL for the 50th Percentile	Waste Code	Reg Limit	Eagan,MN	Eagan,MN	Ashland,KY	Ashland,KY	Rohnert Park,CA	Orange,TX	Boynton Beach,FL
				Sample Number	2108193	2108196	2108372	2108373	2118862	2132631	2139355
				Year	2001	2001	2001	2001	2001	2002	2002
BNA											
2,4,5-Trichlorophenol	112	ND	D041	400	<5.0	<5.0	<5.0	<5.0	<5.0	<5.0	<5.0
2,4,6-Trichlorophenol	112	ND	D042	2	<2.0	<2.0	<2.0	<2.0	<2.0	<2.0	<2.0
2,4-Dinitrotoluene	112	ND	D030	0.13	<0.13	<0.13	<0.13	<0.13	<0.13	<0.13	<0.13
2-Methylphenol	112	ND	D023	200	<5.0	<5.0	<5.0	<5.0	<5.0	<5.0	<5.0
3+4-Methylphenol	112	ND	D024/25	200	<5.0	<5.0	<5.0	<5.0	<5.0	<5.0	<5.0
Hexachlorobenzene	112	ND	D032	0.13	<0.025	<0.025	<0.025	<0.025	<0.025	<0.025	<0.025
Hexachlorobutadiene	112	ND	D033	0.5	<0.10	<0.10	<0.10	<0.10	<0.10	<0.10	<0.10
Hexachloroethane	112	ND	D034	3	<1.0	<1.0	<1.0	<1.0	<1.0	<1.0	<1.0
Nitrobenzene	112	ND	D036	2	<0.40	<0.40	<0.40	<0.40	<0.40	<0.40	<0.40
Pentachlorophenol	112	ND	D037	100	<5.0	<5.0	<5.0	<5.0	<5.0	<5.0	<5.0
Pyridine	112	ND	D038	5	<1.0	<1.0	<1.0	<1.0	<1.0	<1.0	<1.0
METALS											
Arsenic	113	ND	D004	5	<5.00	<5.00	<5.00	<5.00	<5.00	<5.00	<5.00
Barium	112	1.90	D005	100	0.79	0.88	<0.500	<0.500	2.01	<0.500	<5.00
Cadmium	112	ND	D006	1	<0.500	<0.500	<0.500	<0.500	<0.500	<0.500	<0.500
Chromium	112	ND	D007	5	<0.500	<0.500	<0.500	<0.500	<0.500	<0.500	<0.500
Lead	112	ND	D008	5	<4.00	**5.25**	<4.00	<4.00	<4.00	<4.00	<4.00
Mercury	112	ND	D009	0.2	<0.10	<0.10	<0.10	<0.10	<0.10	<0.10	<0.040
Selenium	112	ND	D010	1	<0.45	<0.45	<0.45	<0.45	<0.45	<0.45	<0.45
Silver	112	ND	D011	5	<0.500	<0.500	<0.500	<0.500	<0.500	<0.500	<0.500
Misc											
Flash Point	106	156	D001	140	155	155	157	158	**132**	159	152
pH	109	7.18	D002	2-12.5	7.1	7.19	7.01	6.77	7.35	6.79	6.61
VOA											
1,1-Dichloroethylene	112	ND	D029	0.7	<0.40	<0.40	<0.40	<0.40	<0.40	<0.40	<0.40
1,2-Dichloroethane	112	ND	D028	0.5	<0.20	<0.20	<0.20	<0.20	<0.20	<0.20	<0.20
1,4-Dichlorobenzene	112	ND	D027	7.5	2.7	3.1	1.4	0.65	<0.50	<0.50	0.68
Benzene	112	ND	D018	0.5	**3.4**	**3.2**	**0.58**	0.42	**5**	<0.20	**28.8**
Carbon Tetrachloride	112	ND	D019	0.5	<0.20	<0.20	<0.20	<0.20	<0.20	<0.20	<0.20
Chlorobenzene	112	ND	D021	100	<0.20	<0.20	<0.20	<0.20	<0.20	<0.20	<0.20
Chloroform	112	ND	D022	6	<0.20	<0.20	<0.20	<0.20	<0.20	<0.20	0.99
Methyl Ethyl Ketone	112	ND	D035	200	3.5	4.8	<0.50	<0.50	<0.50	<0.50	<0.50
Tetrachloroethylene	112	28.6	D039	0.7	**700**	**746**	0.39	**297**	**903**	**1.2**	0.43
Trichloroethylene	112	ND	D040	0.5	**73.6**	**72.2**	<0.20	<0.20	**1.4**	<0.20	<0.20
Vinyl Chloride	112	ND	D043	0.2	<0.15	<0.15	<0.15	<0.15	<0.15	<0.15	<0.15

PWS 150

				Sample Number	2143934	2143959	2143962	2144813	2144822	2144833
				Year	2002	2002	2002	2002	2002	2002
Analysis	**Number of Samples**	**90 UCL for the 50th Percentile**	**Waste Code**	**Reg Limit**	No_ Amityville,NY	No_ Amityville,NY	No_ Amityville,NY	Lackawanna,NY	Lackawanna,NY	Lackawanna,NY
BNA										
2,4,5-Trichlorophenol	112	ND	D041	400	<5.0	<5.0	<5.0	<5.0	<5.0	<5.0
2,4,6-Trichlorophenol	112	ND	D042	2	<2.0	<2.0	<2.0	<2.0	<2.0	<2.0
2,4-Dinitrotoluene	112	ND	D030	0.13	<0.13	<0.13	<0.13	<0.13	<0.13	<0.13
2-Methylphenol	112	ND	D023	200	<5.0	<5.0	<5.0	<5.0	<5.0	<5.0
3+4-Methylphenol	112	ND	D024/25	200	<5.0	<5.0	<5.0	<5.0	<5.0	<5.0
Hexachlorobenzene	112	ND	D032	0.13	<0.025	<0.025	<0.025	<0.025	<0.025	<0.025
Hexachlorobutadiene	112	ND	D033	0.5	<0.10	<0.10	<0.10	<0.10	<0.10	<0.10
Hexachloroethane	112	ND	D034	3	<1.0	<1.0	<1.0	<1.0	<1.0	<1.0
Nitrobenzene	112	ND	D036	2	<0.40	<0.40	<0.40	<0.40	<0.40	<0.40
Pentachlorophenol	112	ND	D037	100	<5.0	<5.0	<5.0	<5.0	<5.0	<5.0
Pyridine	112	ND	D038	5	<1.0	<1.0	<1.0	<1.0	<1.0	<1.0
METALS										
Arsenic	113	ND	D004	5	<5.00	<5.00	<5.00	<5.00	<5.00	<5.00
Barium	112	1.90	D005	100	<5.00	<5.00	<5.00	<5.00	<5.00	<5.00
Cadmium	112	ND	D006	1	<0.500	<0.500	<0.500	<0.500	<0.500	<0.500
Chromium	112	ND	D007	5	<0.500	<0.500	<0.500	<0.500	<0.500	<0.500
Lead	112	ND	D008	5	<4.00	<4.00	<4.00	<4.00	<4.00	<4.00
Mercury	112	ND	D009	0.2	<0.10	<0.10	<0.10	<0.1	<0.10	<0.10
Selenium	112	ND	D010	1	<0.45	<0.45	<0.45	<0.45	<0.45	<0.45
Silver	112	ND	D011	5	<0.500	<0.500	<0.500	<0.500	<0.500	<0.500
Misc										
Flash Point	106	156	D001	140	164	154	153	161	161	163
pH	109	7.18	D002	2-12.5	7.48	7.29	6.97	7.21	6.89	7.40
VOA										
1,1-Dichloroethylene	112	ND	D029	0.7	<0.40	<0.40	<0.40	<0.40	<0.40	<0.40
1,2-Dichloroethane	112	ND	D028	0.5	<0.20	<0.20	<0.20	<0.20	<0.20	<0.20
1,4-Dichlorobenzene	112	ND	D027	7.5	0.65	0.65	0.62	<0.50	0.53	<0.50
Benzene	112	ND	D018	0.5	<0.20	<0.20	<0.20	<0.20	<0.20	<0.20
Carbon Tetrachloride	112	ND	D019	0.5	<0.20	<0.20	<0.20	<0.20	<0.20	<0.20
Chlorobenzene	112	ND	D021	100	<0.20	<0.20	<0.20	<0.20	<0.20	<0.20
Chloroform	112	ND	D022	6	<0.20	<0.20	<0.20	<0.20	<0.20	<0.20
Methyl Ethyl Ketone	112	ND	D035	200	<0.50	<0.50	<0.50	<0.50	<0.50	<0.50
Tetrachloroethylene	112	28.6	D039	0.7	**93**	**95.9**	**110**	<0.20	0.48	<0.20
Trichloroethylene	112	ND	D040	0.5	0.33	0.36	0.38	<0.20	<0.20	<0.20
Vinyl Chloride	112	ND	D043	0.2	<0.15	<0.15	<0.15	<0.15	<0.15	<0.15

PWS 150

Analysis	Number of Samples	90 UCL for the 50th Percentile	Waste Code	Reg Limit	Farmington,NM	Pineville,LA	Albuquerque,NM	Tampa,FL	Clackamas,OR	Clackamas,OR
				Sample Number	2145821	C2F210340001	C2G090275001	C2J010111001	C2J010123001	C2J010123001R2
				Year	2002	2002	2002	2002	2002	2002
BNA										
2,4,5-Trichlorophenol	112	ND	D041	400	<5.0	<<<<<<0.05	<<<<<<0.05	0.16	0.17	
2,4,6-Trichlorophenol	112	ND	D042	2	<2.0	<<<<<<0.05	<<<<<<0.05	<<<<<<0.05	<<<<<<0.05	
2,4-Dinitrotoluene	112	ND	D030	0.13	<0.13	<<<<<<0.05	<<<<<<0.05	<<<<<<0.05	<<<<<<0.05	
2-Methylphenol	112	ND	D023	200	<5.0	0.26	<<<<<<0.05	0.097	0.15	
3+4-Methylphenol	112	ND	D024/25	200	<5.0	0.51	<<<<<<0.05	0.18	1.1	
Hexachlorobenzene	112	ND	D032	0.13	<0.025	<<<<<<0.025	<<<<<<0.025	<<<<<<0.025	<<<<<<0.025	
Hexachlorobutadiene	112	ND	D033	0.5	<0.10	<<<<<<0.1	<<<<<<0.1	<<<<<<0.1	<<<<<<0.1	
Hexachloroethane	112	ND	D034	3	<1.0	<<<<<<1	<<<<<<1	<<<<<<1	<<<<<<1	
Nitrobenzene	112	ND	D036	2	<0.40	<<<<<<0.05	<<<<<<0.05	<<<<<<0.05	<<<<<<0.05	
Pentachlorophenol	112	ND	D037	100	<5.0	<<<<<<3	<<<<<<3	<<<<<<3	<<<<<<3	
Pyridine	112	ND	D038	5	<1.0	<<<<<<0.05	<<<<<<0.05	<<<<<<0.05	0.06	
METALS										
Arsenic	113	ND	D004	5	<5.00	<<<<<<1	<<<<<<1	<<<<<<1	<<<<<<1	
Barium	112	1.90	D005	100	<5.00	<<<<<<20	<<<<<<20	<<<<<<20	<<<<<<20	
Cadmium	112	ND	D006	1	<0.500	<<<<<<0.5	<<<<<<0.5	<<<<<<0.5	<<<<<<0.5	
Chromium	112	ND	D007	5	<0.500	0.66	<<<<<<0.5	<<<<<<0.5	<<<<<<0.5	
Lead	112	ND	D008	5	<4.00	**5.2**	<<<<<<0.3	0.31	3.6	
Mercury	112	ND	D009	0.2	<0.10	<<<<<<0.033	<<<<<<0.033	<<<<<<0.033	<<<<<<0.033	
Selenium	112	ND	D010	1	<0.45	<<<<<<0.5	<<<<<<0.5	<<<<<<0.5	<<<<<<0.5	
Silver	112	ND	D011	5	<0.500	<<<<<<0.5	<<<<<<0.5	<<<<<<0.5	<<<<<<0.5	
Misc										
Flash Point	106	156	D001	140	158	144	163	157	165	
pH	109	7.18	D002	2-12.5	6.99	7.6	6.7	7.5	8.4	
VOA										
1,1-Dichloroethylene	112	ND	D029	0.7	<0.40	<<<<<<5	<<<<<<0.25	<<<<<<0.25		<<<<<<5
1,2-Dichloroethane	112	ND	D028	0.5	<0.20	<<<<<<5	<<<<<<0.25	<<<<<<0.25		<<<<<<5
1,4-Dichlorobenzene	112	ND	D027	7.5	<0.50	<<<<<<5	<<<<<<0.25	0.35		<<<<<<5
Benzene	112	ND	D018	0.5	**6.1**	<<<<<<5	<<<<<<0.25	<<<<<<0.25		<<<<<<5
Carbon Tetrachloride	112	ND	D019	0.5	<0.20	<<<<<<5	<<<<<<0.25	<<<<<<0.25		<<<<<<5
Chlorobenzene	112	ND	D021	100	<0.20	<<<<<<5	<<<<<<0.25	<<<<<<0.25		<<<<<<5
Chloroform	112	ND	D022	6	<0.20	<<<<<<20	<<<<<<1	<<<<<<1		<<<<<<20
Methyl Ethyl Ketone	112	ND	D035	200	<0.50	<<<<<<5	<<<<<<0.25	0.67		<<<<<<5
Tetrachloroethylene	112	28.6	D039	0.7	0.29	**440**	1.7	0.29		**610**
Trichloroethylene	112	ND	D040	0.5	<0.20	**30**	<<<<<<0.25	<<<<<<0.25		<<<<<<5
Vinyl Chloride	112	ND	D043	0.2	<0.15	<<<<<<2	<<<<<<0.1	<<<<<<0.1		<<<<<<2

PWS 150

				Sample Number	C2J010314001	C2J040339001	C2J040339001R2	C2J150179001	C2J150179001R2	C2J150251001
				Year	2002	2002	2002	2002	2002	2002
Analysis	Number of Samples	90 UCL for the 50th Percentile	Waste Code	Reg Limit	Gering,NE	Grand Island,NE	Grand Island,NE	Syracuse,NY	Syracuse,NY	Syracuse,NY
BNA										
2,4,5-Trichlorophenol	112	ND	D041	400	0.1	0.1		0.17		<<<<<<0.05
2,4,6-Trichlorophenol	112	ND	D042	2	<<<<<<0.05	<<<<<<0.05		<<<<<<0.05		<<<<<<0.05
2,4-Dinitrotoluene	112	ND	D030	0.13	<<<<<<0.05	<<<<<<0.05		0.1		**0.17**
2-Methylphenol	112	ND	D023	200	0.29	0.12		0.31		0.28
3+4-Methylphenol	112	ND	D024/25	200	0.82	0.24		0.4		0.37
Hexachlorobenzene	112	ND	D032	0.13	<<<<<<0.025	<<<<<<0.025		<<<<<<0.025		<<<<<<0.025
Hexachlorobutadiene	112	ND	D033	0.5	<<<<<<0.1	<<<<<<0.1		<<<<<<0.1		<<<<<<0.1
Hexachloroethane	112	ND	D034	3	<<<<<<1	<<<<<<1		<<<<<<1		<<<<<<1
Nitrobenzene	112	ND	D036	2	0.56	0.55		<<<<<<0.05		0.1
Pentachlorophenol	112	ND	D037	100	<<<<<<3	<<<<<<3		<<<<<<3		<<<<<<3
Pyridine	112	ND	D038	5	0.068	0.057		0.083		0.075
METALS										
Arsenic	113	ND	D004	5	<<<<<<1	<<<<<<1		<<<<<<1		<<<<<<1
Barium	112	1.90	D005	100	<<<<<<20	<<<<<<20		<<<<<<20		<<<<<<20
Cadmium	112	ND	D006	1	<<<<<<0.5	<<<<<<0.5		<<<<<<0.5		<<<<<<0.5
Chromium	112	ND	D007	5	<<<<<<0.5	<<<<<<0.5		0.64		<<<<<<0.5
Lead	112	ND	D008	5	**13.7**	0.34		**12.6**		1.3
Mercury	112	ND	D009	0.2	<<<<<<0.033	<<<<<<0.033		<<<<<<0.033		<<<<<<0.033
Selenium	112	ND	D010	1	<<<<<<0.5	<<<<<<0.5		<<<<<<0.5		<<<<<<0.5
Silver	112	ND	D011	5	<<<<<<0.5	<<<<<<0.5		<<<<<<0.5		<<<<<<0.5
Misc										
Flash Point	106	156	D001	140	145	160		158		155
pH	109	7.18	D002	2-12.5	6.8	6		6.7		7
VOA										
1,1-Dichloroethylene	112	ND	D029	0.7	<<<<<<0.5		<<<<<<10		<<<<<<5	
1,2-Dichloroethane	112	ND	D028	0.5	<<<<<<0.5		<<<<<<10		<<<<<<5	
1,4-Dichlorobenzene	112	ND	D027	7.5	<<<<<<0.5		<<<<<<10		<<<<<<5	
Benzene	112	ND	D018	0.5	<<<<<<0.5		<<<<<<10		<<<<<<5	
Carbon Tetrachloride	112	ND	D019	0.5	<<<<<<0.5		<<<<<<10		<<<<<<5	
Chlorobenzene	112	ND	D021	100	<<<<<<0.5		<<<<<<10		<<<<<<5	
Chloroform	112	ND	D022	6	<<<<<<2		<<<<<<40		<<<<<<20	
Methyl Ethyl Ketone	112	ND	D035	200	<<<<<<0.5		<<<<<<10		<<<<<<5	
Tetrachloroethylene	112	28.6	D039	0.7	**53**		**1300**		**420**	
Trichloroethylene	112	ND	D040	0.5	<<<<<<0.5		<<<<<<10		**83**	
Vinyl Chloride	112	ND	D043	0.2	<<<<<<0.2		<<<<<<4		<<<<<<2	

PWS 150

Analysis	Number of Samples	90 UCL for the 50th Percentile	Waste Code	Reg Limit	C2J150251001R2	C2J150254001	C2J150254001R2	C2J150258001	C2J150258001R2	C2J170109001
				Year	2002	2002	2002	2002	2002	2002
					Syracuse,NY	Syracuse,NY	Syracuse,NY	Syracuse,NY	Syracuse,NY	Avon,NY
BNA										
2,4,5-Trichlorophenol	112	ND	D041	400		<<<<<<0.05		0.12		<<<<<<0.05
2,4,6-Trichlorophenol	112	ND	D042	2		<<<<<<0.05		<<<<<<0.05		<<<<<<0.05
2,4-Dinitrotoluene	112	ND	D030	0.13		**0.35**		**1.2**		<<<<<<0.05
2-Methylphenol	112	ND	D023	200		<<<<<<0.05		4.8		<<<<<<0.05
3+4-Methylphenol	112	ND	D024/25	200		0.67		7.2		0.62
Hexachlorobenzene	112	ND	D032	0.13		<<<<<<0.025		<<<<<<0.025		<<<<<<0.025
Hexachlorobutadiene	112	ND	D033	0.5		<<<<<<0.1		<<<<<<0.1		<<<<<<0.1
Hexachloroethane	112	ND	D034	3		<<<<<<1		<<<<<<1		<<<<<<1
Nitrobenzene	112	ND	D036	2		<<<<<<0.05		1.9		<<<<<<0.05
Pentachlorophenol	112	ND	D037	100		<<<<<<3		<<<<<<3		<<<<<<3
Pyridine	112	ND	D038	5		0.064		0.19		0.1
METALS										
Arsenic	113	ND	D004	5		<<<<<<1		<<<<<<1		<<<<<<1
Barium	112	1.90	D005	100		25.4		<<<<<<20		<<<<<<20
Cadmium	112	ND	D006	1		0.82		<<<<<<0.5		<<<<<<0.5
Chromium	112	ND	D007	5		0.93		<<<<<<0.5		<<<<<<0.5
Lead	112	ND	D008	5		**11.9**		**8.5**		1.4
Mercury	112	ND	D009	0.2		<<<<<<0.033		<<<<<<0.033		<<<<<<0.033
Selenium	112	ND	D010	1		<<<<<<0.5		<<<<<<0.5		<<<<<<0.5
Silver	112	ND	D011	5		<<<<<<0.5		<<<<<<0.5		<<<<<<0.5
Misc										
Flash Point	106	156	D001	140		147		153		153
pH	109	7.18	D002	2-12.5		6		7.9		6.5
VOA										
1,1-Dichloroethylene	112	ND	D029	0.7	<<<<<<5		<<<<<<25		<<<<<<25	
1,2-Dichloroethane	112	ND	D028	0.5	<<<<<<5		<<<<<<25		<<<<<<25	
1,4-Dichlorobenzene	112	ND	D027	7.5	<<<<<<5		<<<<<<25		<<<<<<25	
Benzene	112	ND	D018	0.5	<<<<<<5		<<<<<<25		**130**	
Carbon Tetrachloride	112	ND	D019	0.5	<<<<<<5		<<<<<<25		<<<<<<25	
Chlorobenzene	112	ND	D021	100	<<<<<<5		<<<<<<25		<<<<<<25	
Chloroform	112	ND	D022	6	<<<<<<20		<<<<<<100		<<<<<<100	
Methyl Ethyl Ketone	112	ND	D035	200	<<<<<<5		<<<<<<25		<<<<<<25	
Tetrachloroethylene	112	28.6	D039	0.7	**200**		**250**		**1600**	
Trichloroethylene	112	ND	D040	0.5	**59**		**110**		**1200**	
Vinyl Chloride	112	ND	D043	0.2	<<<<<<2		<<<<<<10		<<<<<<10	

PWS 150

Analysis	Number of Samples	90 UCL for the 50th Percentile	Waste Code	Reg Limit	Avon,NY	Nepean,ON	Oshawa,ON	Oshawa,ON	Grand Island,NE	Grand Island,NE
				Sample Number	C2J170109001R2	C2J170214001	C2K080265001	C2K080265001R2	C2K130115001	C2K130115001R2
				Year	2002	2002	2002	2002	2002	2002
BNA										
2,4,5-Trichlorophenol	112	ND	D041	400		<<<<<<0.05	<<<<<<0.05		<<<<<<0.05	
2,4,6-Trichlorophenol	112	ND	D042	2		<<<<<<0.05	<<<<<<0.05		<<<<<<0.05	
2,4-Dinitrotoluene	112	ND	D030	0.13		0.062	**0.57**		<<<<<<0.05	
2-Methylphenol	112	ND	D023	200		<<<<<<0.05	0.58		<<<<<<0.05	
3+4-Methylphenol	112	ND	D024/25	200		<<<<<<0.05	<<<<<<0.05		0.95	
Hexachlorobenzene	112	ND	D032	0.13		<<<<<<0.025	<<<<<<0.025		<<<<<<0.025	
Hexachlorobutadiene	112	ND	D033	0.5		<<<<<<0.1	<<<<<<0.1		<<<<<<0.1	
Hexachloroethane	112	ND	D034	3		<<<<<<1	<<<<<<1		<<<<<<1	
Nitrobenzene	112	ND	D036	2		<<<<<<0.05	0.93		0.15	
Pentachlorophenol	112	ND	D037	100		<<<<<<3	<<<<<<3		<<<<<<3	
Pyridine	112	ND	D038	5		<<<<<<0.05	<<<<<<0.05		<<<<<<0.05	
METALS										
Arsenic	113	ND	D004	5		<<<<<<1	<<<<<<1		<<<<<<1	
Barium	112	1.90	D005	100		36.5	<<<<<<20		<<<<<<20	
Cadmium	112	ND	D006	1		<<<<<<0.5	<<<<<<0.5		<<<<<<0.5	
Chromium	112	ND	D007	5		<<<<<<0.5	<<<<<<0.5		1.1	
Lead	112	ND	D008	5		<<<<<<0.3	**5.4**		2	
Mercury	112	ND	D009	0.2		<<<<<<0.033	<<<<<<0.033		<<<<<<0.033	
Selenium	112	ND	D010	1		<<<<<<0.5	<<<<<<0.5		<<<<<<0.5	
Silver	112	ND	D011	5		<<<<<<0.5	<<<<<<0.5		<<<<<<0.5	
Misc										
Flash Point	106	156	D001	140		149	150			
pH	109	7.18	D002	2-12.5		9.9	7.6			
VOA										
1,1-Dichloroethylene	112	ND	D029	0.7	<<<<<<20	<<<<<<0.5		<<<<<<100		<<<<<<5
1,2-Dichloroethane	112	ND	D028	0.5	<<<<<<20	<<<<<<0.5		<<<<<<100		<<<<<<5
1,4-Dichlorobenzene	112	ND	D027	7.5	<<<<<<20	<<<<<<0.5		<<<<<<100		<<<<<<5
Benzene	112	ND	D018	0.5	<<<<<<20	<<<<<<0.5		**160**		<<<<<<5
Carbon Tetrachloride	112	ND	D019	0.5	<<<<<<20	<<<<<<0.5		<<<<<<100		<<<<<<5
Chlorobenzene	112	ND	D021	100	<<<<<<20	<<<<<<0.5		<<<<<<100		<<<<<<5
Chloroform	112	ND	D022	6	<<<<<<80	<<<<<<2		<<<<<<400		<<<<<<20
Methyl Ethyl Ketone	112	ND	D035	200	<<<<<<20	<<<<<<0.5		<<<<<<100		<<<<<<5
Tetrachloroethylene	112	28.6	D039	0.7	**1500**	<<<<<<0.5		**14000**		**570**
Trichloroethylene	112	ND	D040	0.5	<<<<<<20	<<<<<<0.5		**880**		**53**
Vinyl Chloride	112	ND	D043	0.2	<<<<<<8	<<<<<<0.2		<<<<<<40		<<<<<<2

PWS 150

				Sample Number	C2K130117001	C2K130118001	C2K130118001R2	C2K130119001	C2K220115001	C2K220403001	C2K220403001R2
				Year	2002	2002	2002	2002	2002	2002	2002
Analysis	Number of Samples	90 UCL for the 50th Percentile	Waste Code	Reg Limit	Cohoes,NY	Cohoes,NY	Cohoes,NY	Cohoes,NY	Omaha,NE	Wichita,KS	Wichita,KS
BNA											
2,4,5-Trichlorophenol	112	ND	D041	400	<<<<<0.05	<<<<<<0.05		<<<<<0.05	<<0.05	<<<0.05	
2,4,6-Trichlorophenol	112	ND	D042	2	<<<<<0.05	<<<<<<0.05		<<<<<0.05	<<0.05	<<<0.05	
2,4-Dinitrotoluene	112	ND	D030	0.13	**0.17**	<<<<<<0.05		0.12	<<0.05	<<<0.05	
2-Methylphenol	112	ND	D023	200	0.18	0.44		0.54	0.085	0.14	
3+4-Methylphenol	112	ND	D024/25	200	0.38	0.54		0.62	0.14	0.54	
Hexachlorobenzene	112	ND	D032	0.13	<<<<<0.025	<<<<<<0.025		<<<<<0.025	<<0.025	<<<0.025	
Hexachlorobutadiene	112	ND	D033	0.5	<<<<<0.1	<<<<<<0.1		0.12	<<0.1	<<<0.1	
Hexachloroethane	112	ND	D034	3	<<<<<1	<<<<<<1		<<<<<1	<<1	<<<1	
Nitrobenzene	112	ND	D036	2	0.26	<<<<<<0.05		<<<<<0.05	<<0.05	0.42	
Pentachlorophenol	112	ND	D037	100	<<<<<3	<<<<<<3		<<<<<3	<<3	<<<3	
Pyridine	112	ND	D038	5	<<<<<0.05	<<<<<<0.05		<<<<<0.05	<<0.05	<<<0.05	
METALS											
Arsenic	113	ND	D004	5	<<<<<1	<<<<<<1		<<<<<1	<<1	<<<1	
Barium	112	1.90	D005	100	<<<<<20	<<<<<<20		<<<<<20	<<20	<<<20	
Cadmium	112	ND	D006	1	<<<<<0.5	<<<<<<0.5		0.63	<<0.5	<<<0.5	
Chromium	112	ND	D007	5	<<<<<0.5	<<<<<<0.5		1.3	<<0.5	<<<0.5	
Lead	112	ND	D008	5	<<<<<0.3	1		**120**	1.7	0.67	
Mercury	112	ND	D009	0.2	<<<<<0.033	<<<<<<0.033		<<<<<0.033	<<0.033	<<<0.033	
Selenium	112	ND	D010	1	<<<<<0.5	<<<<<<0.5		<<<<<0.5	<<0.5	0.56	
Silver	112	ND	D011	5	<<<<<0.5	<<<<<<0.5		<<<<<0.5	<<0.5	<<<0.5	
Misc											
Flash Point	106	156	D001	140	148			150	156	149	
pH	109	7.18	D002	2-12.5	6.3			8.4	6.4	6.6	
VOA											
1,1-Dichloroethylene	112	ND	D029	0.7	<<<<<0.5		<<<<<<5	<<<<<0.5	<<0.5		<<<10
1,2-Dichloroethane	112	ND	D028	0.5	<<<<<0.5		<<<<<<5	<<<<<0.5	<<0.5		<<<10
1,4-Dichlorobenzene	112	ND	D027	7.5	0.78		<<<<<<5	0.69	<<2		<<<40
Benzene	112	ND	D018	0.5	<<<<<0.5		<<<<<<5	<<<<<0.5	<<0.5		<<<10
Carbon Tetrachloride	112	ND	D019	0.5	<<<<<0.5		<<<<<<5	<<<<<0.5	<<0.5		<<<10
Chlorobenzene	112	ND	D021	100	<<<<<0.5		<<<<<<5	<<<<<0.5	<<0.5		<<<10
Chloroform	112	ND	D022	6	<<<<<2		<<<<<<20	<<<<<2	<<2		<<<40
Methyl Ethyl Ketone	112	ND	D035	200	<<<<<0.5		5	<<<<<0.5	<<2		<<<40
Tetrachloroethylene	112	28.6	D039	0.7	**42**		**530**	**28**	**0.89**		**710**
Trichloroethylene	112	ND	D040	0.5	<<<<<0.5		**12**	**8**	<<0.5		<<<10
Vinyl Chloride	112	ND	D043	0.2	<<<<<0.2		<<<<<<2	<<<<<0.2	<<0.2		<<<4

PWS 150

Analysis	Number of Samples	90 UCL for the 50th Percentile	Waste Code	Reg Limit	Wichita,KS
				Sample Number	C2L040243001
				Year	2002
BNA					
2,4,5-Trichlorophenol	112	ND	D041	400	<0.05
2,4,6-Trichlorophenol	112	ND	D042	2	<0.05
2,4-Dinitrotoluene	112	ND	D030	0.13	<0.05
2-Methylphenol	112	ND	D023	200	0.076
3+4-Methylphenol	112	ND	D024/25	200	0.091
Hexachlorobenzene	112	ND	D032	0.13	<0.025
Hexachlorobutadiene	112	ND	D033	0.5	<0.1
Hexachloroethane	112	ND	D034	3	<1
Nitrobenzene	112	ND	D036	2	<0.05
Pentachlorophenol	112	ND	D037	100	<3
Pyridine	112	ND	D038	5	<0.05
METALS					
Arsenic	113	ND	D004	5	<1
Barium	112	1.90	D005	100	<20
Cadmium	112	ND	D006	1	<0.5
Chromium	112	ND	D007	5	<0.5
Lead	112	ND	D008	5	**14.8**
Mercury	112	ND	D009	0.2	<0.033
Selenium	112	ND	D010	1	<0.5
Silver	112	ND	D011	5	<0.5
Misc					
Flash Point	106	156	D001	140	157
pH	109	7.18	D002	2-12.5	8.3
VOA					
1,1-Dichloroethylene	112	ND	D029	0.7	<0.5
1,2-Dichloroethane	112	ND	D028	0.5	<0.5
1,4-Dichlorobenzene	112	ND	D027	7.5	<2
Benzene	112	ND	D018	0.5	<0.5
Carbon Tetrachloride	112	ND	D019	0.5	<0.5
Chlorobenzene	112	ND	D021	100	<0.5
Chloroform	112	ND	D022	6	<2
Methyl Ethyl Ketone	112	ND	D035	200	<2
Tetrachloroethylene	112	28.6	D039	0.7	<0.5
Trichloroethylene	112	ND	D040	0.5	<0.5
Vinyl Chloride	112	ND	D043	0.2	<0.2

PWS Sludge-Dumpster Mud

				Sample Number	2008975	2010700	2015445	2015449	2016046	2017363	2017634	2018185
				Year	2000	2000	2000	2000	2000	2000	2000	2000
Analysis	Number of Samples	90 UCL for the 50th Percentile	Waste Code	Reg Limit	Pompano Beach,FL	Denton,TX	Albuquerque,NM	Omaha,NE	Sioux Falls,SD	Edwardsville,KS	Grand Island,NE	Wichita,KS
BNA												
2,4,5-Trichlorophenol	159	ND	D041	400	<0.10	<0.10	<0.10	<36.091	<0.10	<0.50	<2.495	<0.10
2,4,6-Trichlorophenol	159	ND	D042	2	<0.10	<0.10	<0.10	<36.091	<0.10	<0.50	<2.495	<0.10
2,4-Dinitrotoluene	159	ND	D030	0.13	<0.057	<0.020	<0.020	<7.2182	<0.020	<0.10	<0.499	<0.020
2-Methylphenol	159	ND	D023	200	<0.10	<0.10	<0.10	<36.091	<0.10	<0.50	<2.495	<0.20
3+4-Methylphenol	159	ND	D024/25	200	<0.10	<0.10	<0.10	36.443	<0.10	<0.65	<2.495	0.187
Hexachlorobenzene	159	ND	D032	0.13	<0.084	<0.020	<0.020	<7.2182	<0.020	<0.10	<0.499	<0.020
Hexachlorobutadiene	159	ND	D033	0.5	<0.10	<0.10	<0.10	<36.091	<0.10	<0.50	<2.495	<0.10
Hexachloroethane	159	ND	D034	3	<0.10	<0.10	<0.10	<36.091	<0.10	<0.50	<2.495	<0.10
Nitrobenzene	159	ND	D036	2	<0.10	<0.10	<0.10	<36.091	<0.10	<0.50	<2.495	<0.10
Pentachlorophenol	159	ND	D037	100	<0.10	<0.10	<0.10	<36.091	<0.10	<0.50	<2.495	<0.10
Pyridine	159	ND	D038	5	<0.11	<0.10	<0.11	<38.611	<0.11	<0.54	<2.66965	<0.10
METALS												
Arsenic	160	ND	D004	5	<0.500	<0.500	<0.500	<0.905	<0.500	<0.500	<0.545	<0.500
Barium	160	1.703	D005	100	0.555	0.655	0.964	2.169	1.14	1.52	0.472	1.21
Cadmium	160	0.421	D006	1	0.617	0.256	0.427	**3.947**	**1.29**	0.151	0.73	0.218
Chromium	159	0.076	D007	5	<0.050	<0.050	<0.050	<0.0905		<0.050	0.056	<0.050
Lead	160	1.2	D008	5	**6.50**	0.567	0.470	**137.9**	1.63	<0.400	0.735	1.04
Mercury	160	ND	D009	0.2	<0.0008	<0.0008	<0.0008	<0.009728	<0.0008	<0.0008	<0.001792	<0.0008
Selenium	160	ND	D010	1	<0.750	<0.750	<0.750	<0.723	<0.750	<0.750	<0.747	<0.750
Silver	160	ND	D011	5	<0.050	<0.050	<0.050	<0.0905	<0.050	<0.050	<0.0545	<0.050
Misc												
Flash Point	153	143	D001	140	**126**	146	**110**	146	**108**	148	**132**	**115**
pH	162	7.56	D002	2-12.5	7.94	6.72	7.2	7.1	7.4	4.8	7.2	6.85
VOA												
1,1-Dichloroethylene	160	ND	D029	0.7	<0.20	<0.20	<0.20	<0.542	<0.20	<2.0	<0.832	<0.20
1,2-Dichloroethane	160	ND	D028	0.5	<0.20	<0.20	<0.20	<0.362	<0.20	<2.0	<0.812	<0.20
1,4-Dichlorobenzene	160	ND	D027	7.5	<0.20	<0.20	<0.20	<0.632	<0.20	<2.0	<0.842	<0.20
Benzene	160	ND	D018	0.5	<0.20	<0.20	<0.20	<0.362	<0.20	<2.0	**0.819**	<0.20
Carbon Tetrachloride	160	ND	D019	0.5	<0.20	<0.20	<0.20	<0.362	<0.20	<2.0	<0.812	<0.20
Chlorobenzene	160	ND	D021	100	<0.20	<0.20	<0.20	<0.362	<0.20	<2.0	<0.812	<0.20
Chloroform	160	ND	D022	6	<0.20	<0.20	<0.20	<0.362	<0.20	<2.0	<0.812	<0.20
Methyl Ethyl Ketone	160	ND	D035	200	<0.50	<0.50	<0.50	0.998	<0.50	<5.0	2.168	0.535
Tetrachloroethylene	160	6.448	D039	0.7	<0.20	0.222	0.413	**252.752**	**0.705**	**10.82**	**12.13**	0.265
Trichloroethylene	160	0.264	D040	0.5	<0.20	<0.20	<0.20	**2.522**	<0.20	<2.0	**0.966**	<0.20
Vinyl Chloride	160	ND	D043	0.2	<0.14	<0.14	<0.14	<0.2624	<0.14	<1.4	<0.5694	<0.14

PWS Sludge-Dumpster Mud

				Sample Number	2020390	2025728	2029157	2033639	2037495	2037518	2039383	2039581
				Year	2000	2000	2000	2000	2000	2000	2000	2000
Analysis	Number of Samples	90 UCL for the 50th Percentile	Waste Code	Reg Limit	Cohoes,NY	Garden City,GA	Salt Lake City,UT	Omaha,NE	Syracuse,NY	Syracuse,NY	Raleigh,NC	Highland,CA
BNA												
2,4,5-Trichlorophenol	159	ND	D041	400	<6.485	<4.098	<0.50	<4.49	<0.50	<0.50	<0.50	<0.50
2,4,6-Trichlorophenol	159	ND	D042	2	<6.485	<4.098	<0.50	<4.49	<0.50	<0.50	<0.50	<0.50
2,4-Dinitrotoluene	159	ND	D030	0.13	<1.297	<0.8196	<0.10	<0.898	<0.10	<0.10	<0.10	<0.10
2-Methylphenol	159	ND	D023	200	<54.5	<13.8	<50	<53	<50	<50	<50	<50
3+4-Methylphenol	159	ND	D024/25	200	<54.5	<13.8	<50	<54	<50	<50	<50	<50
Hexachlorobenzene	159	ND	D032	0.13	<1.297	<0.8196	<0.10	<0.898	<0.10	<0.10	<0.10	<0.10
Hexachlorobutadiene	159	ND	D033	0.5	<6.485	<4.098	<0.50	<4.49	<0.50	<0.50	<0.50	<0.50
Hexachloroethane	159	ND	D034	3	<6.485	<4.098	<0.50	<4.49	<0.50	<0.50	<0.50	<0.50
Nitrobenzene	159	ND	D036	2	<6.485	<4.098	<0.50	<4.49	<0.50	<0.50	<0.50	<0.50
Pentachlorophenol	159	ND	D037	100	<6.485	<4.098	<0.50	<4.49	<0.50	<0.50	<0.50	<0.50
Pyridine	159	ND	D038	5	<6.93895	<4.38486	<0.54	<4.8043	<0.50	<0.50	<0.54	<0.50
METALS												
Arsenic	160	ND	D004	5	0.668	<0.59	<0.500	<0.59	<0.500	<0.500	<0.500	<0.500
Barium	160	1.703	D005	100	0.701	0.467	0.904	1.869	2.08	2.91	0.891	3.02
Cadmium	160	0.421	D006	1	<0.0635	0.166	0.619	0.209	0.405	0.692	0.931	0.082
Chromium	159	0.076	D007	5	<0.0635	0.112	<0.050	0.09	<0.050	<0.050	<0.050	<0.050
Lead	160	1.2	D008	5	<0.508	<0.472	1.21	1.049	0.697	0.748	2.67	<0.400
Mercury	160	ND	D009	0.2	<0.003776	<0.001584	<0.0008	<0.002784	<0.0008	<0.0008	<0.0008	<0.0008
Selenium	160	ND	D010	1	<0.741	<0.73515	<0.750	<0.744	<0.750	<0.750	<0.750	<0.750
Silver	160	ND	D011	5	<0.0635	<0.059	<0.050	<0.059	<0.050	<0.050	<0.050	<0.050
Misc												
Flash Point	153	143	D001	140	154	148	183	142	**120**	**135**	152	>200
pH	162	7.56	D002	2-12.5	6.03	3.32	7.06	7.21	6.24	7.24	4.76	10.03
VOA												
1,1-Dichloroethylene	160	ND	D029	0.7	<0.276	<0.204	<0.20	<0.80	<0.20	<0.20	<0.20	<0.20
1,2-Dichloroethane	160	ND	D028	0.5	<0.236	<0.20	<0.20	<0.40	<0.20	<0.20	<0.20	<0.20
1,4-Dichlorobenzene	160	ND	D027	7.5	<0.296	0.215	<0.20	1.5	<0.20	<0.20	<0.20	<0.20
Benzene	160	ND	D018	0.5	<0.236	0.224	<0.20	1.1	<0.20	<0.20	<0.20	<0.20
Carbon Tetrachloride	160	ND	D019	0.5	<0.236	<0.20	<0.20	<0.40	<0.20	<0.20	<0.20	<0.20
Chlorobenzene	160	ND	D021	100	<0.236	<0.20	<0.20	<0.40	<0.20	<0.20	<0.20	<0.20
Chloroform	160	ND	D022	6	<0.236	<0.20	<0.20	1.2	<0.20	<0.20	<0.20	<0.20
Methyl Ethyl Ketone	160	ND	D035	200	<0.59	0.528	<0.50	2	<0.50	<0.50	<0.50	<0.50
Tetrachloroethylene	160	6.448	D039	0.7	**2.876**	**15.518**	**0.827**	**547**	**2.955**	**3.247**	0.628	**0.813**
Trichloroethylene	160	0.264	D040	0.5	<0.236	0.434	<0.20	**211**	**1.486**	**1.129**	<0.20	<0.20
Vinyl Chloride	160	ND	D043	0.2	<0.1672	<0.1402	<0.14	<0.30	<0.14	<0.14	<0.14	<0.14

PWS Sludge-Dumpster Mud

				Sample Number	2039583	2039838	2039839	2039840	2039947	2040317	2040698	2042477
				Year	2000	2000	2000	2000	2000	2000	2000	2000
Analysis	Number of Samples	90 UCL for the 50th Percentile	Waste Code	Reg Limit	Sacramento,CA	Los Angeles,CA	Salida,CA	El Monte,CA	Oakland,CA	Rohnert Park,CA	Santa Anna,CA	Sioux Falls,SD
BNA												
2,4,5-Trichlorophenol	159	ND	D041	400	<200	<0.50	<0.50	<0.10	<200	<2.5	<0.50	<0.50
2,4,6-Trichlorophenol	159	ND	D042	2	<200	<0.50	<0.50	<0.10	<200	<2.5	<0.50	<0.50
2,4-Dinitrotoluene	159	ND	D030	0.13	<40	<0.10	<0.10	<0.020	<40	<0.50	<0.10	<0.10
2-Methylphenol	159	ND	D023	200	<200	<50	<50	<10.0	<200	<250	<0.50	<50
3+4-Methylphenol	159	ND	D024/25	200	<200	<50	<50	<10.0	<200	<250	<0.50	<50
Hexachlorobenzene	159	ND	D032	0.13	<40	<0.10	<0.10	<0.020	<40	<0.50	<0.10	<0.10
Hexachlorobutadiene	159	ND	D033	0.5	<200	<0.50	<0.50	<0.10	<200	<2.5	<0.50	<0.50
Hexachloroethane	159	ND	D034	3	<200	<0.50	<0.50	<0.10	<200	<2.5	<0.50	<0.50
Nitrobenzene	159	ND	D036	2	<200	<0.50	<0.50	<0.10	<200	<2.5	<0.50	<0.50
Pentachlorophenol	159	ND	D037	100	<200	<0.50	<0.50	<0.10	<200	<2.5	<0.50	<0.50
Pyridine	159	ND	D038	5	<210	<0.50	<0.50	<0.10	<210	<2.5	<0.50	<0.54
METALS												
Arsenic	160	ND	D004	5	<5.00	<0.500	<0.500	<0.500	<5.00	<0.500	<0.500	<0.500
Barium	160	1.703	D005	100	0.761	27.6	0.806	0.701	1.26	0.789	1.42	1.32
Cadmium	160	0.421	D006	1	<0.500	**1.31**	0.41	0.085	0.662	0.595	**1.19**	0.447
Chromium	159	0.076	D007	5	<0.500	0.238	<0.050	<0.050	0.557	<0.050	0.125	<0.050
Lead	160	1.2	D008	5	<4.00	<0.400	0.694	0.563	**10.4**	1.21	2.96	0.46
Mercury	160	ND	D009	0.2	<0.10	<0.0008	<0.0008	<0.0008	<0.10	<0.0008	<0.0008	<0.0008
Selenium	160	ND	D010	1	<0.45	<0.750	<0.750	<0.750	<0.45	<0.750	<0.750	<0.750
Silver	160	ND	D011	5	<0.500	<0.050	<0.050	<0.050	<0.500	<0.050	<0.050	<0.050
Misc												
Flash Point	153	143	D001	140	150	>200	**105**	>200	152	**115**	153	121
pH	162	7.56	D002	2-12.5	6.74	5.59	6.79	9.71	6.93	6.72	6.93	6.96
VOA												
1,1-Dichloroethylene	160	ND	D029	0.7	<4.0	<0.20	<0.20	<0.20	<4.0	<0.20	<0.20	<0.20
1,2-Dichloroethane	160	ND	D028	0.5	<2.0	<0.20	<0.20	<0.20	<2.0	<0.20	<0.20	<0.20
1,4-Dichlorobenzene	160	ND	D027	7.5	<5.0	<0.20	<0.20	<0.20	<5.0	<0.20	<0.20	<0.20
Benzene	160	ND	D018	0.5	**2.7**	<0.20	<0.20	<0.20	**3.4**	<0.20	<0.20	<0.20
Carbon Tetrachloride	160	ND	D019	0.5	<2.0	<0.20	<0.20	<0.20	<2.0	<0.20	<0.20	<0.20
Chlorobenzene	160	ND	D021	100	<2.0	<0.20	<0.20	<0.20	<2.0	<0.20	<0.20	<0.20
Chloroform	160	ND	D022	6	<2.0	<0.20	<0.20	<0.20	<2.0	<0.20	<0.20	<0.20
Methyl Ethyl Ketone	160	ND	D035	200	<5.0	<0.50	<0.50	<0.50	12.8	<0.50	<0.50	<0.50
Tetrachloroethylene	160	6.448	D039	0.7	**1870**	**6.398**	0.242	<0.20	**1240**	**8.549**	**4.475**	**4.496**
Trichloroethylene	160	0.264	D040	0.5	**23.4**	<0.20	<0.20	<0.20	**48.1**	<0.20	0.324	**0.514**
Vinyl Chloride	160	ND	D043	0.2	<1.5	<0.14	<0.14	<0.14	<1.5	<0.14	<0.14	<0.14

PWS Sludge-Dumpster Mud

				Sample Number	2044435	2044436	2044437	2044832	2045063	2045069	2045546
				Year	2000	2000	2000	2000	2000	2000	2000
Analysis	Number of Samples	90 UCL for the 50th Percentile	Waste Code	Reg Limit	No_ Amityville,NY	No_ Amityville,NY	No_ Amityville,NY	Pineville,LA	Fresno,CA	St_ Charles,MO	Cohoes,NY
BNA											
2,4,5-Trichlorophenol	159	ND	D041	400	<0.10	<0.10	<0.10	<0.10	<0.50	<0.10	<0.10
2,4,6-Trichlorophenol	159	ND	D042	2	<0.10	<0.10	<0.10	<0.10	<0.50	<0.10	<0.10
2,4-Dinitrotoluene	159	ND	D030	0.13	<0.020	<0.020	<0.020	<0.020	<0.10	<0.020	<0.020
2-Methylphenol	159	ND	D023	200	<10.0	<10.0	<10.0	<10.0	<50	<10.0	<10.0
3+4-Methylphenol	159	ND	D024/25	200	<10.0	<10.0	<10.0	<10.0	<50	<10.0	<10.0
Hexachlorobenzene	159	ND	D032	0.13	<0.020	<0.020	<0.020	<0.020	<0.10	<0.020	<0.020
Hexachlorobutadiene	159	ND	D033	0.5	<0.10	<0.10	<0.10	<0.10	<0.50	<0.10	<0.10
Hexachloroethane	159	ND	D034	3	<0.10	<0.10	<0.10	<0.10	<0.50	<0.10	<0.10
Nitrobenzene	159	ND	D036	2	<0.10	<0.10	<0.10	<0.10	<0.50	<0.10	<0.10
Pentachlorophenol	159	ND	D037	100	<0.10	<0.10	<0.10	<0.10	<0.50	<0.10	<0.10
Pyridine	159	ND	D038	5	<0.11	<0.11	<0.11	<0.11	<0.50	<0.11	<0.11
METALS											
Arsenic	160	ND	D004	5	<0.500	<0.500	<0.500	<0.500	<0.500	<0.500	<0.500
Barium	160	1.703	D005	100	0.924	0.971	0.914	0.527	1.26	0.975	0.881
Cadmium	160	0.421	D006	1	**12.1**	**8.57**	**13.4**	<0.050	0.352	**1.3**	0.507
Chromium	159	0.076	D007	5	<0.050	<0.050	<0.050	<0.050	<0.050	<0.050	<0.050
Lead	160	1.2	D008	5	**14.3**	**14.4**	**15.5**	<0.400	0.65	1.42	0.722
Mercury	160	ND	D009	0.2	<0.0008	0.0009	<0.0008	<0.0008	<0.0008	<0.0008	<0.0008
Selenium	160	ND	D010	1	<0.750	<0.750	<0.750	<0.750	<0.750	<0.750	<0.750
Silver	160	ND	D011	5	<0.050	<0.050	<0.050	<0.050	<0.050	<0.050	<0.050
Misc											
Flash Point	153	143	D001	140	**85**	**91**	**112**	**115**	**135**	**101**	**108**
pH	162	7.56	D002	2-12.5	5.88	6.46	5.56	6.7	7.63	8.01	5.98
VOA											
1,1-Dichloroethylene	160	ND	D029	0.7	<0.20	<0.20	<0.20	<0.20	<0.20	<0.20	<0.20
1,2-Dichloroethane	160	ND	D028	0.5	<0.20	<0.20	<0.20	<0.20	<0.20	<0.20	<0.20
1,4-Dichlorobenzene	160	ND	D027	7.5	<0.20	<0.20	<0.20	<0.20	<0.20	<0.20	<0.20
Benzene	160	ND	D018	0.5	<0.20	<0.20	<0.20	<0.20	<0.20	<0.20	<0.20
Carbon Tetrachloride	160	ND	D019	0.5	<0.20	<0.20	<0.20	<0.20	<0.20	<0.20	<0.20
Chlorobenzene	160	ND	D021	100	<0.20	<0.20	<0.20	<0.20	<0.20	<0.20	<0.20
Chloroform	160	ND	D022	6	<0.20	<0.20	<0.20	<0.20	<0.20	<0.20	<0.20
Methyl Ethyl Ketone	160	ND	D035	200	<0.50	<0.50	<0.50	<0.50	0.94	2.224	<0.50
Tetrachloroethylene	160	6.448	D039	0.7	<0.20	<0.20	<0.20	**2.096**	**0.769**	0.21	0.244
Trichloroethylene	160	0.264	D040	0.5	<0.20	<0.20	<0.20	<0.20	<0.20	<0.20	<0.20
Vinyl Chloride	160	ND	D043	0.2	<0.14	<0.14	<0.14	<0.14	<0.14	<0.14	<0.14

PWS Sludge-Dumpster Mud

				Sample Number	2045548	2045549	2050409	2050531	2050715	2050717	2050737	2051054
				Year	2000	2000	2000	2000	2000	2000	2000	2000
Analysis	Number of Samples	90 UCL for the 50th Percentile	Waste Code	Reg Limit	Cohoes,NY	Cohoes,NY	Lackawanna,NY	Lackawanna,NY	Columbus,GA	Farmington,NM	Norcross,GA	Macon,GA
BNA												
2,4,5-Trichlorophenol	159	ND	D041	400	<0.10	<0.10	<0.10	<0.10	<0.10	<0.10	<0.10	<0.50
2,4,6-Trichlorophenol	159	ND	D042	2	<0.10	<0.10	<0.10	<0.10	<0.10	<0.10	<0.10	<0.50
2,4-Dinitrotoluene	159	ND	D030	0.13	<0.020	<0.020	<0.020	<0.020	<0.020	<0.020	<0.020	<0.10
2-Methylphenol	159	ND	D023	200	<10.0	<10.0	15.6	7.23	<10.0	<10.0	<10.0	<50
3+4-Methylphenol	159	ND	D024/25	200	<10.0	<10.0	28	13	<10.0	<10.0	<10.0	<50
Hexachlorobenzene	159	ND	D032	0.13	<0.020	<0.020	<0.020	<0.020	<0.020	<0.020	<0.020	<0.10
Hexachlorobutadiene	159	ND	D033	0.5	<0.10	<0.10	<0.10	<0.10	<0.10	<0.10	<0.10	<0.50
Hexachloroethane	159	ND	D034	3	<0.10	<0.10	<0.10	<0.10	<0.10	<0.10	<0.10	<0.50
Nitrobenzene	159	ND	D036	2	<0.10	<0.10	<0.10	<0.10	<0.10	<0.10	<0.10	<0.50
Pentachlorophenol	159	ND	D037	100	<0.10	<0.10	<0.10	<0.10	<0.10	<0.10	<0.10	<0.50
Pyridine	159	ND	D038	5	<0.11	<0.11	<0.11	<0.11	<0.11	<0.11	<0.11	<0.54
METALS												
Arsenic	160	ND	D004	5	<0.500	<0.500	<0.500	<0.500	<0.500	<0.500	<0.500	<0.500
Barium	160	1.703	D005	100	0.935	0.47	1.15	1.32	0.089	1.9	1.36	8.55
Cadmium	160	0.421	D006	1	0.438	0.307	0.84	0.557	0.392	**29.8**	0.089	0.323
Chromium	159	0.076	D007	5	<0.050	<0.050	<0.050	<0.050	0.193	0.124	<0.050	<0.050
Lead	160	1.2	D008	5	0.774	0.697	1.93	1.45	**2650**	3.47	<0.400	<0.400
Mercury	160	ND	D009	0.2	<0.0008	<0.0008	<0.0008	<0.0008	<0.0008	<0.0008	<0.0008	<0.0008
Selenium	160	ND	D010	1	<0.750	<0.750	<0.750	<0.750	<0.750	<0.750	<0.750	<0.750
Silver	160	ND	D011	5	<0.050	<0.050	<0.050	<0.050	<0.050	<0.050	<0.050	<0.050
Misc												
Flash Point	153	143	D001	140	**137**	**119**	141	150	**118**	**126**	**136**	>200
pH	162	7.56	D002	2-12.5	6.78	6.68	7.02	8.49	7.94	7.5	7.33	9.57
VOA												
1,1-Dichloroethylene	160	ND	D029	0.7	<0.20	<0.20	<0.20	<0.20	<0.20	<0.20	<2.0	<0.20
1,2-Dichloroethane	160	ND	D028	0.5	<0.20	<0.20	<0.20	<0.20	<0.20	<0.20	<2.0	<0.20
1,4-Dichlorobenzene	160	ND	D027	7.5	<0.20	<0.20	<0.20	<0.20	<0.20	<0.20	<2.0	<0.20
Benzene	160	ND	D018	0.5	<0.20	<0.20	<0.20	<0.20	<0.20	<0.20	**2.785**	<0.20
Carbon Tetrachloride	160	ND	D019	0.5	<0.20	<0.20	<0.20	<0.20	<0.20	<0.20	<2.0	<0.20
Chlorobenzene	160	ND	D021	100	<0.20	<0.20	<0.20	<0.20	<0.20	<0.20	<2.0	<0.20
Chloroform	160	ND	D022	6	<0.20	<0.20	<0.20	<0.20	<0.20	<0.20	<2.0	<0.20
Methyl Ethyl Ketone	160	ND	D035	200	<0.50	<0.50	<0.50	<0.50	<0.50	<0.50	<5.0	<0.50
Tetrachloroethylene	160	6.448	D039	0.7	0.309	0.215	0.244	<0.20	**1.476**	0.422	**46.82**	0.682
Trichloroethylene	160	0.264	D040	0.5	<0.20	<0.20	<0.20	<0.20	<0.20	<0.20	<2.0	<0.20
Vinyl Chloride	160	ND	D043	0.2	<0.14	<0.14	<0.14	<0.14	<0.14	<0.14	<1.4	<0.14

PWS Sludge-Dumpster Mud

				Sample Number	2052962	2054251	2055247	2055671	2056488	2058614	2058812	2060915
				Year	2000	2000	2000	2000	2000	2000	2000	2000
Analysis	Number of Samples	90 UCL for the 50th Percentile	Waste Code	Reg Limit	Greer,SC	Morrow,GA	Dodge City,KS	Lackawanna,NY	Englewood,CO	Salt Lake City,UT	Avon,NY	Medley,FL
BNA												
2,4,5-Trichlorophenol	159	ND	D041	400	<0.50	<0.10	<0.50	<0.50	<0.50	<0.50	<0.50	<0.50
2,4,6-Trichlorophenol	159	ND	D042	2	<0.50	<0.10	<0.50	<0.50	<0.50	<0.50	<0.50	<0.50
2,4-Dinitrotoluene	159	ND	D030	0.13	<0.10	<0.020	<0.10	<0.10	<0.10	<0.10	<0.10	<0.10
2-Methylphenol	159	ND	D023	200	<50	<10.0	<50	<50	<50	<50	<50	<50
3+4-Methylphenol	159	ND	D024/25	200	<50	<10.0	<50	<50	<50	<50	<50	<50
Hexachlorobenzene	159	ND	D032	0.13	<0.10	<0.020	<0.10	<0.10	<0.10	<0.10	<0.10	<0.10
Hexachlorobutadiene	159	ND	D033	0.5	<0.50	<0.10	<0.50	<0.50	<0.50	<0.50	<0.50	<0.50
Hexachloroethane	159	ND	D034	3	<0.50	<0.10	<0.50	<0.50	<0.50	<0.50	<0.50	<0.50
Nitrobenzene	159	ND	D036	2	<0.50	<0.10	<0.50	<0.50	<0.50	<0.50	<0.50	<0.50
Pentachlorophenol	159	ND	D037	100	<0.50	<0.10	<0.50	<0.50	<0.50	<0.50	<0.50	<0.50
Pyridine	159	ND	D038	5	<0.54	<0.11	<0.54	<0.54	<0.54	<0.54	<0.54	<0.54
METALS												
Arsenic	160	ND	D004	5	<0.500	<0.500	<0.500	<0.500	<0.500	<0.500	<0.500	<0.500
Barium	160	1.703	D005	100	0.488	1.21	1.15	1.96	1.28	0.832	4.30	0.603
Cadmium	160	0.421	D006	1	0.276	**3.12**	0.169	0.522	0.476	0.406	0.191	**1.60**
Chromium	159	0.076	D007	5	<0.050	<0.050	<0.050	<0.050	<0.050	<0.050	0.096	0.079
Lead	160	1.2	D008	5	<0.400	**18.1**	0.851	0.633	0.667	<0.400	1.23	0.639
Mercury	160	ND	D009	0.2	<0.0008	<0.0008	<0.0008	<0.0008	<0.0008	<0.0008	<0.0008	<0.0008
Selenium	160	ND	D010	1	<0.750	<0.750	<0.750	<0.750	<0.750	<0.750	<0.750	<0.750
Silver	160	ND	D011	5	<0.050	<0.050	<0.050	<0.050	<0.050	<0.050	<0.050	<0.050
Misc												
Flash Point	153	143	D001	140	143	180	>200	142	148	144	146	>200
pH	162	7.56	D002	2-12.5	7.06	7.29	6.8	7.44	8.14	7.44	9.28	7.81
VOA												
1,1-Dichloroethylene	160	ND	D029	0.7	<0.20	<0.20	<0.20	<0.20	<0.20	<0.20	<0.20	<0.20
1,2-Dichloroethane	160	ND	D028	0.5	<0.20	<0.20	<0.20	<0.20	<0.20	<0.20	<0.20	<0.20
1,4-Dichlorobenzene	160	ND	D027	7.5	<0.20	<0.20	<0.20	<0.20	<0.20	<0.20	<0.20	<0.20
Benzene	160	ND	D018	0.5	<0.20	<0.20	<0.20	<0.20	0.258	<0.20	<0.20	<0.20
Carbon Tetrachloride	160	ND	D019	0.5	<0.20	<0.20	<0.20	<0.20	<0.20	<0.20	<0.20	<0.20
Chlorobenzene	160	ND	D021	100	<0.20	<0.20	<0.20	<0.20	<0.20	<0.20	<0.20	<0.20
Chloroform	160	ND	D022	6	<0.20	<0.20	<0.20	<0.20	<0.20	<0.20	<0.20	<0.20
Methyl Ethyl Ketone	160	ND	D035	200	<0.50	<0.50	<0.50	<0.50	<0.50	<0.50	<0.50	<0.50
Tetrachloroethylene	160	6.448	D039	0.7	<0.20	<0.20	<0.20	0.269	**0.945**	0.387	<0.20	**4.783**
Trichloroethylene	160	0.264	D040	0.5	<0.20	<0.20	<0.20	<0.20	<0.20	<0.20	<0.20	<0.20
Vinyl Chloride	160	ND	D043	0.2	<0.14	<0.14	<0.14	<0.14	<0.14	<0.14	<0.14	<0.14

PWS Sludge-Dumpster Mud

				Sample Number	2066246	2066958	2066962	2066964	2067061	2067102	2067241	2068874
				Year	2000	2000	2000	2000	2000	2000	2000	2001
Analysis	Number of Samples	90 UCL for the 50th Percentile	Waste Code	Reg Limit	El Monte,CA	Sacramento,CA	Oakland,CA	Los Angeles,CA	Santa Anna,CA	Salida,CA	Highland,CA	Rohnert Park,CA
BNA												
2,4,5-Trichlorophenol	159	ND	D041	400	<0.10	<2.495	<0.50	<0.10	<200	<12.47	<0.50	<0.50
2,4,6-Trichlorophenol	159	ND	D042	2	<0.10	<2.495	<0.50	<0.10	<200	<12.47	<0.50	<0.50
2,4-Dinitrotoluene	159	ND	D030	0.13	<0.020	<0.499	<0.10	<0.020	<40	<2.494	<0.10	<0.10
2-Methylphenol	159	ND	D023	200	<10.0	<51.5	<50	<10.0	<200	<59	<50	<50
3+4-Methylphenol	159	ND	D024/25	200	<10.0	<51.5	<50	<10.0	<200	<59	<50	<50
Hexachlorobenzene	159	ND	D032	0.13	<0.020	<0.499	<0.10	<0.020	<40	<2.494	<0.10	<0.10
Hexachlorobutadiene	159	ND	D033	0.5	<0.10	<2.495	<0.50	<0.10	<200	<12.47	<0.50	<0.50
Hexachloroethane	159	ND	D034	3	<0.10	<2.495	<0.50	<0.10	<200	<12.47	<0.50	<0.50
Nitrobenzene	159	ND	D036	2	<0.10	**2.495**	<0.50	<0.10	<200	<12.47	<0.50	<0.50
Pentachlorophenol	159	ND	D037	100	<0.10	2.495	<0.50	<0.10	<200	<12.47	<0.50	<0.50
Pyridine	159	ND	D038	5	<0.11	<2.670	<0.54	<0.11	<210	<13.343	<0.50	<0.54
METALS												
Arsenic	160	ND	D004	5	<0.500	<4.955	<0.500	<0.500	<5.00	<0.77	<0.500	<0.500
Barium	160	1.703	D005	100	1.47	1.462	0.180	3.88	1.92	0.883	0.631	0.714
Cadmium	160	0.421	D006	1	**1.31**	0.622	<0.050	0.154	<0.500	0.189	<0.050	0.087
Chromium	159	0.076	D007	5	0.456	**5.580**	0.215	<0.050	<0.500	<0.077	<0.050	<0.050
Lead	160	1.2	D008	5	0.900	**10.905**	<0.400	<0.400	<4.00	<0.616	1.18	<0.400
Mercury	160	ND	D009	0.2	<0.0008	<0.099	<0.0008	<0.0008	<0.10	<0.0068	<0.0008	<0.0008
Selenium	160	ND	D010	1	<0.750	<0.453	<0.750	<0.750	<0.45	<0.732	<0.750	<0.750
Silver	160	ND	D011	5	<0.050	<0.4955	<0.050	<0.050	<0.500	<0.077	<0.050	<0.050
Misc												
Flash Point	153	143	D001	140	>200	147	>200	>200	143	**126**	>200	>140
pH	162	7.56	D002	2-12.5	11.60	6.83	9.65	10.47	5.46	7.99	10.46	6.63
VOA												
1,1-Dichloroethylene	160	ND	D029	0.7	<0.20	<0.238	<0.20	<0.20	<0.80	<0.39	<0.20	<0.20
1,2-Dichloroethane	160	ND	D028	0.5	<0.20	<0.218	<0.20	<0.20	<0.40	<0.29	<0.20	<0.20
1,4-Dichlorobenzene	160	ND	D027	7.5	<0.20	<0.248	<0.20	<0.20	1.6	<0.44	<0.20	<0.20
Benzene	160	ND	D018	0.5	<0.20	0.224	<0.20	<0.20	**3.3**	**8.213**	<0.20	<0.20
Carbon Tetrachloride	160	ND	D019	0.5	<0.20	<0.218	<0.20	<0.20	<0.40	<0.29	<0.20	<0.20
Chlorobenzene	160	ND	D021	100	<0.20	<0.218	<0.20	<0.20	<0.40	<0.29	<0.20	<0.20
Chloroform	160	ND	D022	6	<0.20	0.222	<0.20	<0.20	<0.40	<0.29	<0.20	<0.20
Methyl Ethyl Ketone	160	ND	D035	200	<0.50	<0.545	<0.50	<0.50	90.6	0.828	<0.50	<0.50
Tetrachloroethylene	160	6.448	D039	0.7	0.515	**11.633**	**91.77**	**3.69**	**1290**	**54.386**	0.643	**1.546**
Trichloroethylene	160	0.264	D040	0.5	<0.20	0.263	0.451	<0.20	**15.7**	**1.055**	**0.558**	<0.20
Vinyl Chloride	160	ND	D043	0.2	<0.14	0.1536	<0.14	<0.14	<0.30	**0.208**	<0.14	<0.14

PWS Sludge-Dumpster Mud

				Sample Number	2075119	2075385	2075388	2078112	2078115	2078823	2080688	2081091
				Year	2001	2001	2001	2001	2001	2001	2001	2001
Analysis	Number of Samples	90 UCL for the 50th Percentile	Waste Code	Reg Limit	Denton,TX	Cohoes,NY	Cohoes,NY	Fresno,CA	Omaha,NE	Fargo,ND	Sioux Falls,SD	Lackawanna,NY
BNA												
2,4,5-Trichlorophenol	159	ND	D041	400	<0.50	<0.50	<4.49	<4.10	<6.097	<0.50	<0.15	<0.15
2,4,6-Trichlorophenol	159	ND	D042	2	<0.50	<0.50	<4.49	<4.10	<6.097	<0.50	<0.15	<0.15
2,4-Dinitrotoluene	159	ND	D030	0.13	<0.10	<0.10	<0.898	<0.820	<1.219	<0.10	<0.020	<0.020
2-Methylphenol	159	ND	D023	200	<50	<50	<53	<13.8	<15.7	<50	<10.0	<10.0
3+4-Methylphenol	159	ND	D024/25	200	<50	<50	<53	<13.8	<15.7	<50	<10.0	<10.0
Hexachlorobenzene	159	ND	D032	0.13	<0.10	<0.10	<0.898	<0.820	<1.219	<0.10	<0.020	<0.020
Hexachlorobutadiene	159	ND	D033	0.5	<0.50	<0.50	<4.49	<4.10	<6.097	<0.50	<0.050	<0.10
Hexachloroethane	159	ND	D034	3	<0.50	<0.50	<4.49	<4.10	<6.097	<0.50	<0.10	<0.10
Nitrobenzene	159	ND	D036	2	<0.50	<0.50	<4.49	<4.10	<6.097	<0.50	<0.10	<0.10
Pentachlorophenol	159	ND	D037	100	<0.50	<0.50	<4.49	<4.10	<6.097	<0.50	<0.26	<0.26
Pyridine	159	ND	D038	5	<0.50	<0.54	<4.804	<4.385	<6.5238	<0.54	<0.29	<0.29
METALS												
Arsenic	160	ND	D004	5	<0.500	<0.500	<0.59	<0.59	<0.635	<0.500	<0.500	<0.500
Barium	160	1.703	D005	100	0.328	0.403	0.335	1.64	1.305	1.12	1.14	1.56
Cadmium	160	0.421	D006	1	0.354	0.151	0.156	0.405	0.841	0.545	**1.03**	0.111
Chromium	159	0.076	D007	5	0.615	<0.050	<0.059	<0.059	<0.064	0.071	0.182	<0.050
Lead	160	1.2	D008	5	<0.400	<0.400	<0.472	1.002	**23.286**	0.471	0.571	**12.4**
Mercury	160	ND	D009	0.2	<0.0008	<0.0008	<0.0028	<0.0028	<0.0038	<0.0008	<0.0008	<0.0008
Selenium	160	ND	D010	1	<0.750	<0.750	<0.744	<0.744	<0.741	<0.750	<0.750	<0.750
Silver	160	ND	D011	5	<0.050	<0.050	<0.059	<0.059	<0.064	<0.050	<0.050	<0.050
Misc												
Flash Point	153	143	D001	140	**90**	**120**	**85**	150	**134**	155	**112**	>200
pH	162	7.56	D002	2-12.5	7.26	4.53	5.30	7.20	7.24	9.41	8.65	6.99
VOA												
1,1-Dichloroethylene	160	ND	D029	0.7	<0.20	<0.20	<0.2	<0.212	<0.396	<0.20	<0.10	<0.10
1,2-Dichloroethane	160	ND	D028	0.5	<0.20	<0.20	<0.2	<0.204	<0.2	<0.20	<0.10	<0.10
1,4-Dichlorobenzene	160	ND	D027	7.5	<0.20	<0.20	0.212	0.028	1.278	<0.20	<0.10	<0.10
Benzene	160	ND	D018	0.5	<0.20	<0.20	0.21	0.286	**0.523**	<0.20	<0.10	<0.10
Carbon Tetrachloride	160	ND	D019	0.5	<0.20	<0.20	<0.2	<0.204	<0.2	<0.20	<0.10	<0.10
Chlorobenzene	160	ND	D021	100	<0.20	<0.20	<0.2	<0.204	<0.2	<0.20	<0.10	<0.10
Chloroform	160	ND	D022	6	<0.20	<0.20	<0.2	<0.204	<0.2	<0.20	<0.10	<0.10
Methyl Ethyl Ketone	160	ND	D035	200	<0.50	0.693	0.555	0.884	2.084	<0.50	1.19	<0.20
Tetrachloroethylene	160	6.448	D039	0.7	0.292	0.366	**3.164**	**17.39**	**212.666**	**1.233**	0.574	<0.10
Trichloroethylene	160	0.264	D040	0.5	0.304	<0.20	0.273	**0.856**	**14.704**	<0.20	<0.10	<0.10
Vinyl Chloride	160	ND	D043	0.2	<0.14	<0.14	<0.14	<0.143	<0.15	<0.14	<0.15	<0.10

PWS Sludge-Dumpster Mud

				Sample Number	2081093	2081095	2082212	2082482	2083123	2083399	2083404
				Year	2001	2001	2001	2001	2001	2001	2001
Analysis	Number of Samples	90 UCL for the 50th Percentile	Waste Code	Reg Limit	Lackawanna,NY	Lackawanna,NY	Albuquerque,NM	Grand Island,NE	Salt Lake City,UT	Syracuse,NY	Syracuse,NY
BNA											
2,4,5-Trichlorophenol	159	ND	D041	400	<0.15	<3.059	<2.149	<0.15	<3.1485	<3.149	<3.149
2,4,6-Trichlorophenol	159	ND	D042	2	<0.15	<3.059	<2.149	<0.15	<3.1485	<3.149	<3.149
2,4-Dinitrotoluene	159	ND	D030	0.13	<0.020	<0.408	<0.42	<0.020	<0.4198	<0.42	<0.42
2-Methylphenol	159	ND	D023	200	<10.0	<7.96	<11.9	<10.0	<13.9	<13.9	<13.9
3+4-Methylphenol	159	ND	D024/25	200	<10.0	<8.96	<11.9	<10.0	<14.9	<14.9	<14.9
Hexachlorobenzene	159	ND	D032	0.13	<0.020	<0.408	<0.42	<0.020	<0.4198	<0.42	<0.42
Hexachlorobutadiene	159	ND	D033	0.5	<0.050	<1.02	<2.099	<0.050	<2.099	<2.1	<2.1
Hexachloroethane	159	ND	D034	3	<0.10	<2.04	<2.099	<0.10	<2.099	<2.1	<2.1
Nitrobenzene	159	ND	D036	2	<0.10	<2.04	<2.099	<0.10	<2.099	<2.1	<2.1
Pentachlorophenol	159	ND	D037	100	<0.26	<5.303	<2.257	<0.26	<5.4574	<5.46	<5.46
Pyridine	159	ND	D038	5	<0.29	<5.915	<2.427	<0.29	<6.0871	<6.09	<6.09
METALS											
Arsenic	160	ND	D004	5	<0.500	<0.545	<0.545	<0.500	<0.545	<0.545	<0.545
Barium	160	1.703	D005	100	1.80	1.394	1.744	0.971	1.932	2.19	2.816
Cadmium	160	0.421	D006	1	0.236	0.269	0.286	1.00	0.205	0.344	0.41
Chromium	159	0.076	D007	5	<0.050	<0.055	<0.055	0.086	<0.0545	<0.055	<0.055
Lead	160	1.2	D008	5	1.89	0.806	0.461	4.36	0.462	0.443	0.452
Mercury	160	ND	D009	0.2	<0.0008	<0.0018	<0.099	<0.0008	<0.001792	<0.0018	<0.0018
Selenium	160	ND	D010	1	<0.750	<0.747	<0.747	<0.750	<0.747	<0.747	<0.747
Silver	160	ND	D011	5	<0.050	<0.055	<0.055	<0.050	<0.0545	<0.055	<0.055
Misc											
Flash Point	153	143	D001	140	>200	**132**	146	**138**	**104**	**112**	**118**
pH	162	7.56	D002	2-12.5	8.88	7.04	8.34	7.74	6.85	8.92	9.36
VOA											
1,1-Dichloroethylene	160	ND	D029	0.7	<0.10	<0.119	<0.115	<0.10	<0.214	<0.214	<0.214
1,2-Dichloroethane	160	ND	D028	0.5	<0.10	<0.109	<0.107	<0.10	<0.206	<0.206	<0.206
1,4-Dichlorobenzene	160	ND	D027	7.5	<0.10	0.135	<0.119	<0.10	<0.218	0.246	0.248
Benzene	160	ND	D018	0.5	<0.10	0.121	0.109	<0.10	0.242	<0.206	0.21
Carbon Tetrachloride	160	ND	D019	0.5	<0.10	<0.109	<0.107	<0.10	0.21	<0.206	<0.206
Chlorobenzene	160	ND	D021	100	<0.10	<0.109	<0.107	<0.10	<0.206	<0.206	<0.206
Chloroform	160	ND	D022	6	<0.10	<0.109	<0.107	<0.10	<0.206	<0.206	<0.206
Methyl Ethyl Ketone	160	ND	D035	200	1.08	0.227	<0.218	<0.20	2.144	<0.515	0.515
Tetrachloroethylene	160	6.448	D039	0.7	0.103	**16.611**	**6.429**	**0.81**	**12.163**	**9.09**	**14.364**
Trichloroethylene	160	0.264	D040	0.5	0.107	**0.574**	0.152	<0.10	**0.552**	0.089	**0.613**
Vinyl Chloride	160	ND	D043	0.2	<0.10	<0.107	<0.105	<0.10	<0.1446	<0.145	<0.145

PWS Sludge-Dumpster Mud

				Sample Number	2083414	2083417	2083699	2083701	2083709	2085290	2087157
				Year	2001	2001	2001	2001	2001	2001	2001
Analysis	Number of Samples	90 UCL for the 50th Percentile	Waste Code	Reg Limit	Syracuse,NY	Garden City,GA	No_ Amityville,NY	No_ Amityville,NY	No_ Amityville,NY	Clackamas,OR	Fresno,CA
BNA											
2,4,5-Trichlorophenol	159	ND	D041	400	<3.149	<9.146	<0.15	<0.15	<0.15	<18.141	<3.149
2,4,6-Trichlorophenol	159	ND	D042	2	<3.149	<9.146	<0.15	<0.15	<0.15	<18.141	<3.149
2,4-Dinitrotoluene	159	ND	D030	0.13	<0.42	<1.219	<0.020	<0.020	<0.020	<2.419	<0.42
2-Methylphenol	159	ND	D023	200	<13.9	<21.7	<10.0	<10.0	<10.0	<33.4	<13.9
3+4-Methylphenol	159	ND	D024/25	200	<14.9	<24.7	<10.0	<10.0	<10.0	<39.4	<14.9
Hexachlorobenzene	159	ND	D032	0.13	<0.42	<1.219	<0.020	<0.020	<0.020	<2.419	<0.42
Hexachlorobutadiene	159	ND	D033	0.5	<2.1	<6.097	<0.10	<0.10	<0.10	<12.094	<2.05
Hexachloroethane	159	ND	D034	3	<2.1	<6.097	<0.10	<0.10	<0.10	<12.094	<2.1
Nitrobenzene	159	ND	D036	2	<2.1	<6.097	<0.10	<0.10	<0.10	<12.094	<2.1
Pentachlorophenol	159	ND	D037	100	<5.46	<15.852	<0.26	<0.26	<0.26	<31.44	<5.457
Pyridine	159	ND	D038	5	<6.09	<17.681	<0.29	<0.29	<0.29	<35.07	<6.087
METALS											
Arsenic	160	ND	D004	5	<0.545	<0.635	<0.500	<0.500	<0.500	<0.77	<0.545
Barium	160	1.703	D005	100	1.18	1.213	2.24	2.42	2.38	0.727	0.73
Cadmium	160	0.421	D006	1	0.565	0.325	0.492	0.302	0.271	0.749	**2**
Chromium	159	0.076	D007	5	<0.055	<0.064	<0.050	<0.050	<0.050	<0.077	0.365
Lead	160	1.2	D008	5	0.536	0.535	0.796	<0.400	<0.400	**6.533**	<0.436
Mercury	160	ND	D009	0.2	<0.0018	<0.0038	<0.0008	<0.0008	<0.0008	<0.0068	<0.0018
Selenium	160	ND	D010	1	<0.747	<0.741	<0.750	<0.750	<0.750	<0.732	<0.747
Silver	160	ND	D011	5	<0.055	<0.064	<0.050	<0.050	<0.050	<0.077	<0.0545
Misc											
Flash Point	153	143	D001	140	**122**	156	**102**	**110**	**102**	**126**	**132**
pH	162	7.56	D002	2-12.5	8.83	5.54	7.69	7.47	6.96	9.15	8.11
VOA											
1,1-Dichloroethylene	160	ND	D029	0.7	<0.214	<0.242	<0.10	<0.20	<0.10	<0.284	<0.214
1,2-Dichloroethane	160	ND	D028	0.5	<0.206	<0.218	<0.10	<0.20	<0.10	<0.236	<0.206
1,4-Dichlorobenzene	160	ND	D027	7.5	0.243	<0.254	<0.10	<0.20	<0.10	<0.308	<0.218
Benzene	160	ND	D018	0.5	<0.206	0.251	<0.10	<0.20	<0.10	**0.692**	0.257
Carbon Tetrachloride	160	ND	D019	0.5	<0.206	<0.218	<0.10	<0.20	<0.10	<0.236	<0.206
Chlorobenzene	160	ND	D021	100	<0.206	<0.218	<0.10	<0.20	<0.10	<0.236	<0.206
Chloroform	160	ND	D022	6	<0.206	<0.218	<0.10	<0.20	<0.10	<0.236	<0.206
Methyl Ethyl Ketone	160	ND	D035	200	<0.515	<0.545	<0.40	<0.50	<0.20	0.922	0.919
Tetrachloroethylene	160	6.448	D039	0.7	**14.97**	**24.45**	**1.22**	**1.229**	0.415	**36.79**	**20.898**
Trichloroethylene	160	0.264	D040	0.5	0.313	**0.656**	<0.10	<0.20	<0.10	**1.124**	**0.841**
Vinyl Chloride	160	ND	D043	0.2	<0.145	<0.154	<0.15	<0.14	<0.10	<0.168	<0.145

PWS Sludge-Dumpster Mud

				Sample Number	2088242	2088454	2088697	2089520	2090123	2090328	2090694	2091971
				Year	2001	2001	2001	2001	2001	2001	2001	2001
Analysis	Number of Samples	90 UCL for the 50th Percentile	Waste Code	Reg Limit	Highland,CA	El Monte,CA	Los Angeles,CA	Salida,CA	Macon,GA	Santa Anna,CA	Englewood,CO	Sacramento,CA
BNA												
2,4,5-Trichlorophenol	159	ND	D041	400	<0.15	<0.75	<0.75	<0.15	<87.11	<0.15	<0.15	<0.15
2,4,6-Trichlorophenol	159	ND	D042	2	<0.15	<0.75	<0.75	<0.15	<87.11	<0.15	<0.15	<0.15
2,4-Dinitrotoluene	159	ND	D030	0.13	<0.020	<0.10	<0.10	<0.020	<11.61	<0.020	<0.055	<0.020
2-Methylphenol	159	ND	D023	200	<10.0	<50	<50	<10.0	<123.1	<10.0	<10.0	<10.0
3+4-Methylphenol	159	ND	D024/25	200	<10.0	<50	<50	<10.0	<152.1	<10.0	<10.0	<10.0
Hexachlorobenzene	159	ND	D032	0.13	<0.020	<0.10	<0.10	<0.020	<11.61	<0.020	<0.046	<0.020
Hexachlorobutadiene	159	ND	D033	0.5	<0.10	<0.50	<0.25	<0.050	<58.04	<0.050	<0.050	<0.10
Hexachloroethane	159	ND	D034	3	<0.10	<0.50	<0.50	<0.10	<58.07	<0.10	<0.10	<0.10
Nitrobenzene	159	ND	D036	2	<0.10	<0.50	<0.50	<0.10	<58.07	<0.10	<0.10	<0.10
Pentachlorophenol	159	ND	D037	100	<0.26	<1.3	<1.3	<0.26	<150.99	<0.26	<0.26	<0.26
Pyridine	159	ND	D038	5	<0.29	<1.5	<1.5	<0.29	<168.41	<0.29	<0.29	<0.25
METALS												
Arsenic	160	ND	D004	5	<0.500	<0.500	<5.00	<0.500	<1.81	<0.500	<0.500	<0.500
Barium	160	1.703	D005	100	1.24	3.11	8.92	0.928	6.8	1.29	1.29	1.75
Cadmium	160	0.421	D006	1	0.096	0.664	<0.500	0.116	1	**3.63**	0.450	0.482
Chromium	159	0.076	D007	5	<0.050	0.068	<0.500	<0.050	0.194	<0.050	<0.050	<0.050
Lead	160	1.2	D008	5	3.14	1.61	<4.00	<0.400	1.44	**27.0**	0.508	1.39
Mercury	160	ND	D009	0.2	<0.0008	<0.0008	<0.10	<0.0008	<0.030	<0.0008	<0.0008	<0.0008
Selenium	160	ND	D010	1	<0.750	<0.750	<0.45	<0.750	<0.663	<0.750	<0.750	<0.750
Silver	160	ND	D011	5	<0.050	<0.050	<0.500	<0.050	<0.181	<0.050	<0.050	<0.050
Misc												
Flash Point	153	143	D001	140	>200	>200	>200	148	142	168	**134**	**138**
pH	162	7.56	D002	2-12.5	10.24	9.90	10.26	8.90	8.14	7.06	6.41	8.13
VOA												
1,1-Dichloroethylene	160	ND	D029	0.7	<0.20	<0.20	<0.40	<0.20	<0.596	<0.20	<0.20	<2.0
1,2-Dichloroethane	160	ND	D028	0.5	<0.20	<0.20	<0.40	<0.20	<0.376	<0.20	<0.20	<2.0
1,4-Dichlorobenzene	160	ND	D027	7.5	<0.20	<0.20	<0.40	<0.20	<0.706	<0.20	<0.20	<2.0
Benzene	160	ND	D018	0.5	<0.20	<0.20	<0.40	<0.20	<0.376	<0.20	<0.20	<2.0
Carbon Tetrachloride	160	ND	D019	0.5	<0.20	<0.20	<0.40	<0.20	<0.376	<0.20	<0.20	<2.0
Chlorobenzene	160	ND	D021	100	<0.20	<0.20	<0.40	<0.20	<0.376	<0.20	<0.20	<2.0
Chloroform	160	ND	D022	6	<0.20	<0.20	<0.40	<0.20	<0.376	<0.20	<0.20	<2.0
Methyl Ethyl Ketone	160	ND	D035	200	<0.50	<0.50	2.801	<0.50	<0.94	<0.50	<0.50	<5.0
Tetrachloroethylene	160	6.448	D039	0.7	**6.448**	**0.999**	**263.1**	**0.811**	**436.26**	0.547	0.643	**42.8**
Trichloroethylene	160	0.264	D040	0.5	<0.20	<0.20	**0.778**	<0.20	**12.32**	<0.20	<0.20	<2.0
Vinyl Chloride	160	ND	D043	0.2	<0.14	<0.14	<0.28	<0.14	<0.274	<0.14	<0.14	<1.4

PWS Sludge-Dumpster Mud

				Sample Number	2092149	2093714	2093883	2094164	2094184	2094366	2094865	2094871
				Year	2001	2001	2001	2001	2001	2001	2001	2001
Analysis	Number of Samples	90 UCL for the 50th Percentile	Waste Code	Reg Limit	Columbus,GA	Cohoes,NY	Pineville,LA	Oakland,CA	Farmington,NM	St_ Charles,MO	Morrow,GA	St_ Paul,NC
BNA												
2,4,5-Trichlorophenol	159	ND	D041	400	<0.15	<0.15	<6.147	<0.75	<0.15	<0.15	<6.147	<0.15
2,4,6-Trichlorophenol	159	ND	D042	2	<0.15	<0.15	<6.147	<0.75	<0.15	<0.15	<6.147	<0.15
2,4-Dinitrotoluene	159	ND	D030	0.13	<0.020	<0.020	<0.8196	<0.10	<0.020	<0.020	<0.8196	<0.020
2-Methylphenol	159	ND	D023	200	<10.0	<10.0	<17.8	<50	<10.0	<10.0	<17.8	<10.0
3+4-Methylphenol	159	ND	D024/25	200	<10.0	<10.0	<17.8	<50	<10.0	<10.0	<17.8	<10.0
Hexachlorobenzene	159	ND	D032	0.13	<0.020	<0.020	<0.8196	<0.10	<0.020	<0.020	<0.8196	<0.020
Hexachlorobutadiene	159	ND	D033	0.5	<0.050	<0.050	<4.049	<0.25	<0.050	<0.050	<4.049	<0.050
Hexachloroethane	159	ND	D034	3	<0.10	<0.10	<4.049	<0.50	<0.10	<0.10	<4.049	<0.10
Nitrobenzene	159	ND	D036	2	<0.10	<0.10	<4.049	<0.50	<0.10	<0.10	<4.049	<0.10
Pentachlorophenol	159	ND	D037	100	<0.26	<0.26	<10.6548	<1.3	<0.26	<0.26	<10.6548	<0.26
Pyridine	159	ND	D038	5	<0.29	<0.25	<10.245	<1.3	<0.25	<0.25	<10.245	<0.25
METALS												
Arsenic	160	ND	D004	5	<0.500	<0.500	<0.59	<0.500	<0.500	<0.500	<0.59	<0.500
Barium	160	1.703	D005	100	1.49	1.27	1.22	0.497	0.664	2.24	22.554	4.24
Cadmium	160	0.421	D006	1	0.292	**1.40**	**1.0532**	<0.050	0.571	0.112	0.599	0.321
Chromium	159	0.076	D007	5	<0.050	<0.050	0.0654	0.542	<0.050	<0.050	0.722	0.441
Lead	160	1.2	D008	5	**6.33**	**5.78**	**213.149**	<0.400	**652**	<0.400	**5.128**	1.24
Mercury	160	ND	D009	0.2	<0.0008	<0.0008	<0.002784	0.005	<0.0008	<0.0008	<0.002784	<0.0008
Selenium	160	ND	D010	1	<0.750	<0.750	<0.744	<0.750	<0.750	<0.750	<0.744	<0.750
Silver	160	ND	D011	5	<0.050	<0.050	<0.059	<0.050	<0.050	<0.050	<0.059	<0.050
Misc												
Flash Point	153	143	D001	140	142	**116**	**138**	>200	**138**	**138**	142	112
pH	162	7.56	D002	2-12.5	5.32	8.02	6.67	6.31	7.94	6.99	9.52	6.7
VOA												
1,1-Dichloroethylene	160	ND	D029	0.7	<0.20	<0.20	<0.228	<2.0	<0.20	<0.20	<0.218	<2.0
1,2-Dichloroethane	160	ND	D028	0.5	<0.20	<0.20	<0.212	<2.0	<0.20	<0.20	<0.206	<2.0
1,4-Dichlorobenzene	160	ND	D027	7.5	<0.20	<0.20	<0.236	<2.0	<0.20	<0.20	0.23	<2.0
Benzene	160	ND	D018	0.5	<0.20	<0.20	0.252	<2.0	<0.20	<0.20	0.236	**3.995**
Carbon Tetrachloride	160	ND	D019	0.5	<0.20	<0.20	<0.212	<2.0	<0.20	<0.20	<0.206	<2.0
Chlorobenzene	160	ND	D021	100	<0.20	<0.20	<0.212	<2.0	<0.20	<0.20	<0.206	<2.0
Chloroform	160	ND	D022	6	<0.20	<0.20	<0.212	<2.0	<0.20	<0.20	<0.206	<2.0
Methyl Ethyl Ketone	160	ND	D035	200	<0.50	0.568	0.928	<5.0	<0.50	<0.50	0.677	<5.0
Tetrachloroethylene	160	6.448	D039	0.7	**1.475**	0.371	**12.756**	**763.6**	<0.20	0.355	**47.226**	**34.46**
Trichloroethylene	160	0.264	D040	0.5	<0.20	<0.20	0.312	<2.0	<0.20	<0.20	**0.686**	<2.0
Vinyl Chloride	160	ND	D043	0.2	<0.14	<0.14	<0.1492	<1.4	<0.14	<0.14	<0.1448	<1.4

PWS Sludge-Dumpster Mud

				Sample Number	2095107	2096464	2096472	2097335	2098606	2099679	2113281	2118940
				Year	2001	2001	2001	2001	2001	2001	2001	2001
Analysis	Number of Samples	90 UCL for the 50th Percentile	Waste Code	Reg Limit	Raleigh,NC	Dodge City,KS	Medley,FL	Avon,NY	Greer,SC	Rohnert Park,CA	Norcross,GA	Salt Lake City,UT
BNA												
2,4,5-Trichlorophenol	159	ND	D041	400	<0.15	<6.588	<180.06	<0.15	<9.1455	<6.735	<0.15	<0.15
2,4,6-Trichlorophenol	159	ND	D042	2	<0.15	<6.588	<180.06	<0.15	<9.1456	<6.735	<0.15	<0.15
2,4-Dinitrotoluene	159	ND	D030	0.13	<0.020	<0.8784	<24.008	<0.020	<1.2194	<0.898	<0.020	<0.020
2-Methylphenol	159	ND	D023	200	<10.0	<47.2	<244	<10.0	<21.7	<57	<10.0	<10.0
3+4-Methylphenol	159	ND	D024/25	200	<10.0	<47.2	<244	<10.0	<21.8	<57	<10.0	<10.0
Hexachlorobenzene	159	ND	D032	0.13	<0.020	<0.8784	<24.008	<0.020	<1.2194	<0.898	<0.020	<0.020
Hexachlorobutadiene	159	ND	D033	0.5	<0.050	<4.196	<60.02	<0.10	<6.097	<4.49	<0.10	<0.10
Hexachloroethane	159	ND	D034	3	<0.10	<4.392	<120.04	<0.10	<6.097	<4.49	<0.10	<0.10
Nitrobenzene	159	ND	D036	2	<0.10	<4.392	<120.04	<0.10	<6.097	<4.49	<0.10	<0.10
Pentachlorophenol	159	ND	D037	100	<0.26	<11.4192	<312.104	<0.26	<15.8522	<11.674	<0.26	<0.26
Pyridine	159	ND	D038	5	<0.25	<10.98	<300.1	<0.25	<15.2425	<11.225	<0.25	<0.25
METALS												
Arsenic	160	ND	D004	5	<0.500	<0.59	<5	<0.500	<0.635	<0.59	<0.500	<0.500
Barium	160	1.703	D005	100	1.36	1.0121	1.888	1.70	1.834	12.223	14.4	1.01
Cadmium	160	0.421	D006	1	0.189	0.205	<0.5	0.303	0.515	0.678	0.118	**1.78**
Chromium	159	0.076	D007	5	<0.050	0.0729	<0.5	<0.050	0.076	0.572	<0.050	<0.050
Lead	160	1.2	D008	5	1.00	0.7525	4.361	1.30	0.677	**7.958**	<0.400	3.93
Mercury	160	ND	D009	0.2	0.026	<0.002784	<0.1	<0.0008	0.004	0.008	<0.0008	<0.0008
Selenium	160	ND	D010	1	<0.750	0.744	<0.45	<0.750	<0.741	<0.744	<0.750	<0.750
Silver	160	ND	D011	5	<0.050	<0.059	<0.5	<0.050	<0.0635	<0.059	<0.050	<0.050
Misc												
Flash Point	153	143	D001	140	**116**	160	154	**136**	156	**136**	>200	155
pH	162	7.56	D002	2-12.5	7.35	7.37	6.69	8.93	7.20	6.64	7.43	7.66
VOA												
1,1-Dichloroethylene	160	ND	D029	0.7	<0.20	<0.212	<1.28	<0.20	<0.218	<1.976	<0.20	<0.20
1,2-Dichloroethane	160	ND	D028	0.5	<0.20	<0.204	<0.68	<0.20	<0.206	<1.968	<0.20	<0.20
1,4-Dichlorobenzene	160	ND	D027	7.5	<0.20	<0.216	<1.58	<0.20	<0.224	1.98	<0.20	<0.20
Benzene	160	ND	D018	0.5	<0.20	<0.204	**8.12**	<0.20	0.239	**1.988**	<0.20	<0.20
Carbon Tetrachloride	160	ND	D019	0.5	<0.20	<0.204	<0.68	<0.20	<0.206	<1.968	<0.20	<0.20
Chlorobenzene	160	ND	D021	100	<0.20	<0.204	<0.68	<0.20	<0.206	<1.968	<0.20	<0.20
Chloroform	160	ND	D022	6	<0.20	<0.204	<0.68	<0.20	<0.206	<1.968	<0.20	<0.20
Methyl Ethyl Ketone	160	ND	D035	200	2.324	0.564	4.624	2.122	1.156	5.27	<1.0	<1.0
Tetrachloroethylene	160	6.448	D039	0.7	0.663	**6.176**	**1437.93**	**5.276**	**21.777**	**101.1**	**1.513**	0.473
Trichloroethylene	160	0.264	D040	0.5	0.395	0.264	**24.158**	0.208	**0.56**	**2.258**	<0.20	<0.20
Vinyl Chloride	160	ND	D043	0.2	<0.14	<0.1432	<0.506	<0.14	<0.1448	<1.378	<0.14	<0.14

PWS Sludge-Dumpster Mud

				Sample Number	2118958	2119114	2121407	2122015	2122249	2123585	2138259	2138819
				Year	2001	2001	2001	2001	2001	2001	2002	2002
Analysis	**Number of Samples**	**90 UCL for the 50th Percentile**	**Waste Code**	**Reg Limit**	Rohnert Park,CA	Highland,CA	Fresno,CA	Santa Anna,CA	El Monte,CA	Oakland,CA	Greer,SC	Tallahassee,FL
BNA												
2,4,5-Trichlorophenol	159	ND	D041	400	<9.1455	<0.15	<3.1485	<6.147	<0.75	<3.1485	<3.1485	<0.15
2,4,6-Trichlorophenol	159	ND	D042	2	<9.1455	<0.15	<3.1485	<6.147	<0.75	<3.1485	<3.1485	<0.15
2,4-Dinitrotoluene	159	ND	D030	0.13	<1.2194	<0.020	<0.4198	<0.8196	<0.10	<0.4198	<0.4198	<0.020
2-Methylphenol	159	ND	D023	200	<21.7	<10.0	<13.9	<17.8	<50	<13.9	<13.9	<10.0
3+4-Methylphenol	159	ND	D024/25	200	<21.7	<10.0	<13.9	<17.8	<50	<13.9	<13.9	<10.0
Hexachlorobenzene	159	ND	D032	0.13	<1.2194	<0.020	<0.4198	<0.8196	<0.10	<0.4198	<0.4198	<0.020
Hexachlorobutadiene	159	ND	D033	0.5	<6.097	<0.10	<1.0495	<4.098	<0.50	<2.099	<2.0495	<0.10
Hexachloroethane	159	ND	D034	3	<6.097	<0.10	<2.099	<4.098	<0.50	<2.099	<2.099	<0.10
Nitrobenzene	159	ND	D036	2	<6.097	<0.10	<2.099	<4.098	<0.50	<2.099	<2.099	<0.10
Pentachlorophenol	159	ND	D037	100	<15.8522	<0.26	<5.4574	<10.6548	<1.3	<5.4574	<5.4574	<0.26
Pyridine	159	ND	D038	5	<15.2425	<0.25	<5.2475	<10.245	<1.3	<5.2475	<5.2475	<0.25
METALS												
Arsenic	160	ND	D004	5	<0.635	<0.500	<0.545	<0.59	<5.00	<0.545	<0.545	<0.500
Barium	160	1.703	D005	100	1.011	2.46	1.311	0.772	2.24	1.38	0.992777	0.936
Cadmium	160	0.421	D006	1	0.7202	0.172	0.2709	0.287	<0.500	0.641	0.143303	**1.18**
Chromium	159	0.076	D007	5	0.0115	0.100	<0.0545	0.06	<0.500	0.165	0.081626	<0.050
Lead	160	1.2	D008	5	2.683	<0.400	<0.436	<0.472	<4.00	3.013	0.619447	0.471
Mercury	160	ND	D009	0.2	<0.00494	<0.0008	<0.001792	0.00288	<0.1	<0.001792	<0.001192	<0.0008
Selenium	160	ND	D010	1	<0.741	<0.750	<0.747	<0.744	<0.45	<0.747	<0.747	<0.750
Silver	160	ND	D011	5	<0.0635	<0.050	<0.0545	<0.059	<0.500	<0.0545	<0.0545	<0.050
Misc												
Flash Point	153	143	D001	140	**136**	150	**123**	158	**139**	**112**	**134**	**107**
pH	162	7.56	D002	2-12.5	7.63	10.21	6.31	5.78	10.70	7.54	6.83	9.84
VOA												
1,1-Dichloroethylene	160	ND	D029	0.7	<0.206	<0.20	<0.202	<0.204	<0.20	<0.204	<0.202	<0.20
1,2-Dichloroethane	160	ND	D028	0.5	<0.2	<0.20	<0.2	<0.2	<0.20	<0.2	<0.2	<0.20
1,4-Dichlorobenzene	160	ND	D027	7.5	0.211	<0.20	0.212	0.228	<0.20	<0.206	0.212	<0.20
Benzene	160	ND	D018	0.5	0.266	<0.20	0.221	0.286	<0.20	**0.684**	0.276	<0.20
Carbon Tetrachloride	160	ND	D019	0.5	<0.2	<0.20	<0.2	<0.2	<0.20	<0.2	<0.2	<0.20
Chlorobenzene	160	ND	D021	100	<0.2	<0.20	<0.2	<0.2	<0.20	<0.2	<0.2	<0.20
Chloroform	160	ND	D022	6	<0.2	<0.20	<0.2	<0.2	<0.20	<0.2	<0.2	<0.20
Methyl Ethyl Ketone	160	ND	D035	200	2.065	<1.0	1.002	1.014	<1.0	1.124	1.006	<1.0
Tetrachloroethylene	160	6.448	D039	0.7	**2.47**	**35.87**	**7.044**	**16.476**	**21.27**	**29.06**	**18.16779**	0.211
Trichloroethylene	160	0.264	D040	0.5	0.476	<0.20	0.388	0.316	<0.20	**0.55**	**0.63766**	<0.20
Vinyl Chloride	160	ND	D043	0.2	<0.1403	<0.14	<0.1401	<0.1402	<0.14	<0.1402	<0.1401	<0.14

PWS Sludge-Dumpster Mud

				Sample Number	2139840	2139869	2139877	2139886	2140186	2140406	2140409	2140995
				Year	2002	2002	2002	2002	2002	2002	2002	2002
Analysis	Number of Samples	90 UCL for the 50th Percentile	Waste Code	Reg Limit	Salt Lake City,UT	Fresno,CA	Garden City,GA	Los Angeles,CA	Salida,CA	Salida,CA	Macon,GA	Norcross,GA
BNA												
2,4,5-Trichlorophenol	159	ND	D041	400	<0.15	<24.138	<9.1455	<0.15	<0.15	<0.15	<300	<3.1485
2,4,6-Trichlorophenol	159	ND	D042	2	<0.15	<24.138	<9.1455	<0.15	<0.15	<0.15	<300	<3.1485
2,4-Dinitrotoluene	159	ND	D030	0.13	<0.020	<3.2184	<1.2194	<0.020	<0.020	<0.020	<40	<0.4198
2-Methylphenol	159	ND	D023	200	<10.0	<41.2	<21.7	<10.0	<10.0	<10.0	<400	<13.9
3+4-Methylphenol	159	ND	D024/25	200	<10.0	<41.2	<21.7	<10.0	<10.0	<10.0	<400	<13.9
Hexachlorobenzene	159	ND	D032	0.13	<0.020	<3.2184	<1.2194	<0.020	<0.020	<0.020	<40	<0.4198
Hexachlorobutadiene	159	ND	D033	0.5	<0.050	<8.046	<3.0485	<0.050	<0.050	<0.050	<100	<1.099
Hexachloroethane	159	ND	D034	3	<0.10	<16.092	<6.097	<0.10	<0.10	<0.10	<200	<2.099
Nitrobenzene	159	ND	D036	2	<0.10	<16.092	<6.097	<0.10	<0.10	<0.10	<200	<2.099
Pentachlorophenol	159	ND	D037	100	<0.26	<41.8392	<15.8522	<0.26	<0.26	<0.26	<520	<5.4574
Pyridine	159	ND	D038	5	<0.25	<40.23	<15.2425	<0.25	<0.25	<0.25	<500	<5.2475
METALS												
Arsenic	160	ND	D004	5	<0.500	<0.86	<0.635	<0.500	<0.500	<0.500	<5.00	<0.545
Barium	160	1.703	D005	100	1.42	1.139	2.313	3.62	0.866	0.636	<5.00	1.703
Cadmium	160	0.421	D006	1	0.481	**2.39**	0.421	0.429	0.903	0.791	<0.500	0.291
Chromium	159	0.076	D007	5	<0.050	0.099	0.134	<0.050	0.145	0.135	<0.500	<0.0545
Lead	160	1.2	D008	5	0.536	4.06	3.437	0.935	0.443	<0.400	<4.00	0.661
Mercury	160	ND	D009	0.2	<0.0008	<0.003936	<0.001976	<0.0008	<0.0008	<0.0008	<0.10	<0.001792
Selenium	160	ND	D010	1	<0.750	<0.726	<0.741	<0.750	<0.750	<0.750	<0.45	<0.747
Silver	160	ND	D011	5	<0.050	<0.086	<0.0635	<0.050	<0.050	<0.050	<0.500	<0.0545
Misc												
Flash Point	153	143	D001	140	>200	>200	158	>200	>200	>200	154	**100**
pH	162	7.56	D002	2-12.5	8.80	7.53	6.29	10.24	7.90	7.78	7.56	8.00
VOA												
1,1-Dichloroethylene	160	ND	D029	0.7	<0.20	<0.212	<0.204	<0.20	<0.20	<0.20	<0.40	<0.202
1,2-Dichloroethane	160	ND	D028	0.5	<0.20	<0.2	<0.2	<0.20	<0.20	<0.20	<0.20	<0.2
1,4-Dichlorobenzene	160	ND	D027	7.5	<0.20	0.32	<0.206	<0.20	<0.20	<0.20	0.61	0.213
Benzene	160	ND	D018	0.5	<0.20	0.312	0.246	<0.20	<0.20	<0.20	**0.65**	<0.2
Carbon Tetrachloride	160	ND	D019	0.5	<0.20	<0.20	<0.2	<0.20	<0.20	<0.20	<0.20	<0.2
Chlorobenzene	160	ND	D021	100	<0.20	<0.20	<0.2	<0.20	<0.20	<0.20	<0.20	<0.2
Chloroform	160	ND	D022	6	<0.20	<0.20	<0.2	<0.20	<0.20	<0.20	<0.20	<0.2
Methyl Ethyl Ketone	160	ND	D035	200	<1.0	0.152	<0.99	<1.0	<1.0	<1.0	0.98	1.014
Tetrachloroethylene	160	6.448	D039	0.7	<0.20	**54.83**	**34.3**	**2.555**	<0.20	<0.20	**386**	**20.16**
Trichloroethylene	160	0.264	D040	0.5	<0.20	**1.22**	0.178	<0.20	<0.20	<0.20	**2.3**	0.213
Vinyl Chloride	160	ND	D043	0.2	<0.14	<0.1406	<0.1402	<0.14	<0.14	<0.14	<0.15	<0.1401

PWS Sludge-Dumpster Mud

				Sample Number	2141321	2141729	2144166	2144178	2144192	2145227	2145822
				Year	2002	2002	2002	2002	2002	2002	2002
Analysis	Number of Samples	90 UCL for the 50th Percentile	Waste Code	Reg Limit	El Monte,CA	Morrow,GA	No_ Amityville,NY	No_ Amityville,NY	No_ Amityville,NY	Rohnert Park,CA	Farmington,NM
BNA											
2,4,5-Trichlorophenol	159	ND	D041	400	<0.15	<5.0	<12.144	<12.144	<30.135	<12.144	<0.15
2,4,6-Trichlorophenol	159	ND	D042	2	<0.15	<2.0	<12.144	<12.144	<30.135	<12.144	<0.15
2,4-Dinitrotoluene	159	ND	D030	0.13	<0.020	<0.13	<1.6192	<1.6192	<4.018	<1.6192	<0.020
2-Methylphenol	159	ND	D023	200	<10.0	<5.0	<25.6	<25.6	<49	<25.6	<10.0
3+4-Methylphenol	159	ND	D024/25	200	<10.0	<5.0	<25.6	<25.6	<49	<25.6	<10.0
Hexachlorobenzene	159	ND	D032	0.13	<0.020	<0.025	<1.6192	<1.6192	<4.018	<1.6192	<0.020
Hexachlorobutadiene	159	ND	D033	0.5	<0.050	<0.10	<8.048	<8.048	<20.045	<8.048	<0.10
Hexachloroethane	159	ND	D034	3	<0.10	<1.0	<8.096	<8.096	<20.09	<8.096	<0.10
Nitrobenzene	159	ND	D036	2	<0.10	<0.40	<8.096	<8.096	<20.09	<8.096	<0.10
Pentachlorophenol	159	ND	D037	100	<0.26	<5.0	<21.0496	<21.0496	<52.234	<21.0496	<0.26
Pyridine	159	ND	D038	5	<0.25	<1.0	<20.24	<20.24	<50.225	<20.24	<0.25
METALS											
Arsenic	160	ND	D004	5	<0.500	<5.00	<0.68	<0.68	<0.95	<0.68	<0.500
Barium	160	1.703	D005	100	<0.500	<5.00	2.95	5.18	2.128	1.028	1.57
Cadmium	160	0.421	D006	1	<0.050	<0.500	0.528	0.969	0.4183	**3.379**	0.416
Chromium	159	0.076	D007	5	<0.050	<0.500	<0.068	0.116	0.10625	0.13976	0.094
Lead	160	1.2	D008	5	<0.400	<4.00	2.08	**5.37**	1.03945	1.7186	1.67
Mercury	160	ND	D009	0.2	<0.0008	<0.040	<0.002368	<0.002368	<0.00472	<0.004768	<0.0008
Selenium	160	ND	D010	1	<0.750	<0.45	<0.738	<0.7203	<0.72	<0.738	<0.750
Silver	160	ND	D011	5	<0.050	<0.500	<0.068	<0.068	<0.095	<0.068	<0.050
Misc											
Flash Point	153	143	D001	140	>200	143	159	156	143	**138**	149
pH	162	7.56	D002	2-12.5	9.94	6.55	9.33	7.94	9.91	7.48	7.14
VOA											
1,1-Dichloroethylene	160	ND	D029	0.7	<0.20	<0.40	<0.21	<0.208	<0.216	<0.208	<0.20
1,2-Dichloroethane	160	ND	D028	0.5	<0.20	<0.20	<0.2	<0.2	<0.2	<0.2	<0.20
1,4-Dichlorobenzene	160	ND	D027	7.5	<0.20	1.2	0.24	0.232	<0.224	0.2264	<0.20
Benzene	160	ND	D018	0.5	<0.20	**5.6**	0.219	0.2136	**0.6**	0.45	<0.20
Carbon Tetrachloride	160	ND	D019	0.5	<0.20	<0.20	<0.20	<0.2	<0.2	<0.2	<0.20
Chlorobenzene	160	ND	D021	100	<0.20	<0.20	<0.20	<0.2	<0.2	0.22	<0.20
Chloroform	160	ND	D022	6	<0.20	<0.20	<0.20	<0.2	<0.2	<0.2	<0.20
Methyl Ethyl Ketone	160	ND	D035	200	<1.0	11.4	1.125	1.072	1.208	1.4	<1.0
Tetrachloroethylene	160	6.448	D039	0.7	**2.249**	**1470**	**49.87**	**40.71**	**103.85**	**35.09**	**0.83**
Trichloroethylene	160	0.264	D040	0.5	<0.20	**57.6**	**11.54**	**7.832**	**5.272**	**1.18**	<0.20
Vinyl Chloride	160	ND	D043	0.2	<0.14	<0.15	<0.1405	<0.1404	<0.1408	<0.1404	<0.14

PWS Sludge-Dumpster Mud

				Sample Number	C2F210333001	C2G090273001	C2G090273001X	C2G160299001	C2G160299001R2	C2I250289001	C2I250289002
				Year	2002	2002	2002	2002	2002	2002	2002
Analysis	Number of Samples	90 UCL for the 50th Percentile	Waste Code	Reg Limit	Pineville,LA	Albuquerque,NM	Albuquerque,NM	Dodge City,KS	Dodge City,KS	Boise,ID	Boise,ID
BNA											
2,4,5-Trichlorophenol	159	ND	D041	400	<<<0.05	<<<<<<0.1		<<<<<<0.05		0.26	
2,4,6-Trichlorophenol	159	ND	D042	2	<<<0.05	<<<<<<0.1		<<<<<<0.05		<<<<<<0.05	
2,4-Dinitrotoluene	159	ND	D030	0.13	<<<0.05	<<<<<<0.1		<<<<<<0.05		<<<<<<0.05	
2-Methylphenol	159	ND	D023	200	0.25	<<<<<<0.1		0.47		1.3	
3+4-Methylphenol	159	ND	D024/25	200	0.1	<<<<<<0.1		1.8		2.8	
Hexachlorobenzene	159	ND	D032	0.13	<<<0.05	<<<<<<0.1		<<<<<<0.025		<<<<<<0.025	
Hexachlorobutadiene	159	ND	D033	0.5	<<<0.05	<<<<<<0.1		<<<<<<0.1		<<<<<<0.1	
Hexachloroethane	159	ND	D034	3	<<<0.05	<<<<<<0.1		<<<<<<1		<<<<<<1	
Nitrobenzene	159	ND	D036	2	<<<0.05	<<<<<<0.1		<<<<<<0.05		<<<<<<0.05	
Pentachlorophenol	159	ND	D037	100	<<<0.25	<<<<<<0.5		<<<<<<3		<<<<<<3	
Pyridine	159	ND	D038	5	<<<0.1	<<<<<<0.2		<<<<<<0.05		0.064	
METALS											
Arsenic	160	ND	D004	5	<<<0.5	<<<<<<0.5		<<<<<<1		<<<<<<1	
Barium	160	1.703	D005	100	<<<10	<<<<<<10		<<<<<<20		<<<<<<20	
Cadmium	160	0.421	D006	1	0.16	0.68		<<<<<<0.5		<<<<<<0.5	
Chromium	159	0.076	D007	5	<<<0.5	<<<<<<0.5		1.2		<<<<<<0.5	
Lead	160	1.2	D008	5	1.7	<<<<<<0.5		**14.3**		0.85	
Mercury	160	ND	D009	0.2	<<<0.0002	0.0002		<<<<<<0.033		<<<<<<0.033	
Selenium	160	ND	D010	1	<<<0.25	<<<<<<0.25		<<<<<<0.5		<<<<<<0.5	
Silver	160	ND	D011	5	<<<0.5	<<<<<<0.5		<<<<<<0.5		<<<<<<0.5	
Misc											
Flash Point	153	143	D001	140	145		156	163		151	
pH	162	7.56	D002	2-12.5	8.7		8.5	6.8		7.9	
VOA											
1,1-Dichloroethylene	160	ND	D029	0.7	<<<0.25	<<<<<<0.05		<<<<<<0.25			<<<<<<0.5
1,2-Dichloroethane	160	ND	D028	0.5	<<<0.25	<<<<<<0.05		<<<<<<0.25			<<<<<<0.5
1,4-Dichlorobenzene	160	ND	D027	7.5	<<<0.25	<<<<<<0.05		0.73			<<<<<<0.5
Benzene	160	ND	D018	0.5	<<<0.25	<<<<<<0.05		**2.7**			**0.75**
Carbon Tetrachloride	160	ND	D019	0.5	<<<0.25	<<<<<<0.05		<<<<<<0.25			<<<<<<0.5
Chlorobenzene	160	ND	D021	100	<<<0.25	<<<<<<0.05		<<<<<<0.25			<<<<<<0.5
Chloroform	160	ND	D022	6	<<<1	<<<<<<0.05		<<<<<<1			<<<<<<2
Methyl Ethyl Ketone	160	ND	D035	200	<<<0.25	<<<<<<0.05		5			0.7
Tetrachloroethylene	160	6.448	D039	0.7	**17**	0.098			**1500**		**210**
Trichloroethylene	160	0.264	D040	0.5	**4.1**	<<<<<<0.05		**8.5**			**22**
Vinyl Chloride	160	ND	D043	0.2	<<<0.1	<<<<<<0.05		<<<<<<0.1			<<<<<<0.2

PWS Sludge-Dumpster Mud

Analysis	Number of Samples	90 UCL for the 50th Percentile	Waste Code	Reg Limit	Clackamas,OR	Archdale,NC	High Point,NC	Gering,NE	Grand Island,NE	Grand Island,NE	Syracuse,NY
				Sample Number	C2J010143001	C2J010158001	C2J010158001	C2J010306001	C2J040303001	C2J040303001X	C2J150160001
				Year	2002	2002	2002	2002	2002	2002	2002
BNA											
2,4,5-Trichlorophenol	159	ND	D041	400	<<<<<<0.05	<<<<<<0.05	<<<<<<0.05	<<<<<<0.05	<<<<<<0.05		<<<<<<0.05
2,4,6-Trichlorophenol	159	ND	D042	2	<<<<<<0.05	<<<<<<0.05	<<<<<<0.05	<<<<<<0.05	<<<<<<0.05		<<<<<<0.05
2,4-Dinitrotoluene	159	ND	D030	0.13	<<<<<<0.05	<<<<<<0.05	<<<<<<0.05	<<<<<<0.05	<<<<<<0.05		<<<<<<0.05
2-Methylphenol	159	ND	D023	200	0.35	0.096	0.096	0.47	0.19		1.1
3+4-Methylphenol	159	ND	D024/25	200	4.5	0.24	0.24	0.64	0.24		1.3
Hexachlorobenzene	159	ND	D032	0.13	<<<<<<0.025	<<<<<<0.05	<<<<<<0.05	<<<<<<0.05	<<<<<<0.05		<<<<<<0.05
Hexachlorobutadiene	159	ND	D033	0.5	<<<<<<0.05	<<<<<<0.05	<<<<<<0.05	<<<<<<0.05	<<<<<<0.05		<<<<<<0.05
Hexachloroethane	159	ND	D034	3	<<<<<<0.05	<<<<<<0.05	<<<<<<0.05	<<<<<<0.05	<<<<<<0.05		<<<<<<0.05
Nitrobenzene	159	ND	D036	2	0.17	<<<<<<0.05	<<<<<<0.05	<<<<<<0.05	<<<<<<0.05		<<<<<<0.05
Pentachlorophenol	159	ND	D037	100	<<<<<<3	<<<<<<3	<<<<<<3	<<<<<<3	<<<<<<3		<<<<<<3
Pyridine	159	ND	D038	5	<<<<<<0.05	<<<<<<0.05	<<<<<<0.05	<<<<<<0.05	<<<<<<0.05		<<<<<<0.05
METALS											
Arsenic	160	ND	D004	5	<<<<<<1	<<<<<<1	<<<<<<1	<<<<<<1	<<<<<<1		<<<<<<1
Barium	160	1.703	D005	100	<<<<<<20	<<<<<<20	<<<<<<20	<<<<<<20	<<<<<<20		<<<<<<20
Cadmium	160	0.421	D006	1	**1.1**	**2.3**	**2.3**	<<<<<<0.5	<<<<<<0.5		0.54
Chromium	159	0.076	D007	5	<<<<<<0.5	<<<<<<0.5	<<<<<<0.5	<<<<<<0.5	<<<<<<0.5		<<<<<<0.5
Lead	160	1.2	D008	5	**15.4**	**187**	**187**	**5.7**	0.88		2
Mercury	160	ND	D009	0.2	<<<<<<0.033	<<<<<<0.033	<<<<<<0.033	<<<<<<0.033	<<<<<<0.033		<<<<<<0.033
Selenium	160	ND	D010	1	<<<<<<0.5	<<<<<<0.5	<<<<<<0.5	<<<<<<0.5	<<<<<<0.5		<<<<<<0.5
Silver	160	ND	D011	5	<<<<<<0.5	<<<<<<0.5	<<<<<<0.5	<<<<<<0.5	<<<<<<0.5		<<<<<<0.5
Misc											
Flash Point	153	143	D001	140	151	151	151	151		150	157
pH	162	7.56	D002	2-12.5	7	7.2	7.2	6.4	7		8.5
VOA											
1,1-Dichloroethylene	160	ND	D029	0.7	<<<<<<0.5	<<<<<<0.5	<<<<<<0.5	<<<<<<0.5	<<<<<<0.5		<<<<<<0.5
1,2-Dichloroethane	160	ND	D028	0.5	<<<<<<0.5	<<<<<<0.5	<<<<<<0.5	<<<<<<0.5	<<<<<<0.5		<<<<<<0.5
1,4-Dichlorobenzene	160	ND	D027	7.5	<<<<<<0.5	<<<<<<0.5	<<<<<<0.5	<<<<<<0.5	<<<<<<0.5		0.75
Benzene	160	ND	D018	0.5	**2**	<<<<<<0.5	<<<<<<0.5	<<<<<<0.5	<<<<<<0.5		<<<<<<0.5
Carbon Tetrachloride	160	ND	D019	0.5	<<<<<<0.5	<<<<<<0.5	<<<<<<0.5	<<<<<<0.5	<<<<<<0.5		<<<<<<0.5
Chlorobenzene	160	ND	D021	100	<<<<<<0.5	<<<<<<0.5	<<<<<<0.5	<<<<<<0.5	<<<<<<0.5		<<<<<<0.5
Chloroform	160	ND	D022	6	<<<<<<2	<<<<<<2	<<<<<<2	<<<<<<2	<<<<<<2		<<<<<<2
Methyl Ethyl Ketone	160	ND	D035	200	4.5	16	16	<<<<<<0.5	<<<<<<0.5		<<<<<<0.5
Tetrachloroethylene	160	6.448	D039	0.7	**2000**	**120**	**120**	**220**	**110**		**66**
Trichloroethylene	160	0.264	D040	0.5	**9.1**	**0.56**	**0.56**	**49**	**11**		**3.2**
Vinyl Chloride	160	ND	D043	0.2	<<<<<<0.2	<<<<<<0.2	<<<<<<0.2	<<<<<<0.2	<<<<<<0.2		<<<<<<0.2

PWS Sludge-Dumpster Mud

				Sample Number	C2J150167001	C2J170118001	C2J170122001	C2J170130001	C2J170133001	C2J170201001	C2J230307001
				Year	2002	2002	2002	2002	2002	2002	2002
Analysis	Number of Samples	90 UCL for the 50th Percentile	Waste Code	Reg Limit	Syracuse,NY	Lackawanna,NY	Lackawanna,NY	Syracuse,NY	Lackawanna,NY	Nepean,ON	St_ Paul,NC
BNA											
2,4,5-Trichlorophenol	159	ND	D041	400	<<<<<<0.05	<<<<<<0.05	<<<<<<0.05	<<<<<<0.05	<<<<<0.05	<<<<<<0.05	<<<0.05
2,4,6-Trichlorophenol	159	ND	D042	2	<<<<<<0.05	<<<<<<0.05	<<<<<<0.05	<<<<<<0.05	<<<<<0.05	<<<<<<0.05	<<<0.05
2,4-Dinitrotoluene	159	ND	D030	0.13	<<<<<<0.05	<<<<<<0.05	<<<<<<0.05	<<<<<<0.05	<<<<<0.05	<<<<<<0.05	<<<0.05
2-Methylphenol	159	ND	D023	200	0.31	0.22	0.39	0.93	0.37	0.67	<<<0.05
3+4-Methylphenol	159	ND	D024/25	200	0.52	0.097	0.51	1.1	0.51	0.8	<<<0.05
Hexachlorobenzene	159	ND	D032	0.13	<<<<<<0.05	<<<<<<0.05	<<<<<<0.05	<<<<<<0.05	<<<<<0.05	<<<<<<0.05	<<<0.05
Hexachlorobutadiene	159	ND	D033	0.5	<<<<<<0.05	<<<<<<0.05	<<<<<<0.05	<<<<<<0.05	<<<<<0.05	<<<<<<0.05	<<<0.05
Hexachloroethane	159	ND	D034	3	<<<<<<0.05	<<<<<<0.05	<<<<<<0.05	<<<<<<0.05	<<<<<0.05	<<<<<<0.05	<<<0.05
Nitrobenzene	159	ND	D036	2	0.055	<<<<<<0.05	<<<<<<0.05	<<<<<<0.05	<<<<<0.05	<<<<<<0.05	<<<0.05
Pentachlorophenol	159	ND	D037	100	<<<<<<3	<<<<<<3	<<<<<<3	<<<<<<3	<<<<<3	<<<<<<3	<<<3
Pyridine	159	ND	D038	5	<<<<<<0.05	<<<<<<0.05	<<<<<<0.05	<<<<<<0.05	<<<<<0.05	<<<<<<0.05	<<<0.05
METALS											
Arsenic	160	ND	D004	5	<<<<<<1	<<<<<<1	<<<<<<1	<<<<<<1	<<<<<1	<<<<<<1	<<<1
Barium	160	1.703	D005	100	<<<<<<20	<<<<<<20	<<<<<<20	<<<<<<20	<<<<<20	<<<<<<20	<<<20
Cadmium	160	0.421	D006	1	0.6	<<<<<<0.5	<<<<<<0.5	<<<<<<0.5	0.64	<<<<<<0.5	<<<0.5
Chromium	159	0.076	D007	5	<<<<<<0.5	<<<<<<0.5	<<<<<<0.5	<<<<<<0.5	<<<<<0.5	<<<<<<0.5	<<<0.5
Lead	160	1.2	D008	5	1	2.1	1.8	1.2	4	0.54	0.46
Mercury	160	ND	D009	0.2	<<<<<<0.033	<<<<<<0.033	<<<<<<0.033	<<<<<<0.033	<<<<<0.033	<<<<<<0.033	<<<0.033
Selenium	160	ND	D010	1	<<<<<<0.5	<<<<<<0.5	<<<<<<0.5	<<<<<<0.5	<<<<<0.5	<<<<<<0.5	<<<0.5
Silver	160	ND	D011	5	<<<<<<0.5	<<<<<<0.5	<<<<<<0.5	<<<<<<0.5	<<<<<0.5	<<<<<<0.5	<<<0.5
Misc											
Flash Point	153	143	D001	140	153	150	157	148	147	155	158
pH	162	7.56	D002	2-12.5	6.1						7.8
VOA											
1,1-Dichloroethylene	160	ND	D029	0.7	<<<<<<0.5	<<<<<<0.5	<<<<<<0.5	<<<<<<0.5	<<<<<0.5	<<<<<<0.5	<<<0.5
1,2-Dichloroethane	160	ND	D028	0.5	<<<<<<0.5	<<<<<<0.5	<<<<<<0.5	<<<<<<0.5	<<<<<0.5	<<<<<<0.5	<<<0.5
1,4-Dichlorobenzene	160	ND	D027	7.5	0.71	<<<<<<0.5	<<<<<<0.5	0.85	<<<<<0.5	<<<<<<0.5	<<<0.5
Benzene	160	ND	D018	0.5	<<<<<<0.5	<<<<<<0.5	<<<<<<0.5	<<<<<<0.5	<<<<<0.5	<<<<<<0.5	<<<0.5
Carbon Tetrachloride	160	ND	D019	0.5	<<<<<<0.5	<<<<<<0.5	<<<<<<0.5	<<<<<<0.5	<<<<<0.5	<<<<<<0.5	<<<0.5
Chlorobenzene	160	ND	D021	100	<<<<<<0.5	<<<<<<0.5	<<<<<<0.5	<<<<<<0.5	<<<<<0.5	<<<<<<0.5	<<<0.5
Chloroform	160	ND	D022	6	<<<<<<2	<<<<<<2	<<<<<<2	<<<<<<2	<<<<<2	<<<<<<2	<<<2
Methyl Ethyl Ketone	160	ND	D035	200	<<<<<<0.5	0.67	4.2	<<<<<<0.5	0.55	<<<<<<0.5	<<<0.5
Tetrachloroethylene	160	6.448	D039	0.7	**31**	**22**	**31**	**120**	**50**	<<<<<<0.5	**17**
Trichloroethylene	160	0.264	D040	0.5	**0.71**	**0.63**	**1.8**	**3.7**	**0.85**	<<<<<<0.5	<<<0.5
Vinyl Chloride	160	ND	D043	0.2	<<<<<<0.2	<<<<<<0.2	<<<<<<0.2	<<<<<<0.2	<<<<<0.2	<<<<<<0.1	<<<0.2

PWS Sludge-Dumpster Mud

				Sample Number	C2K010351001	C2K010357001	C2K060114001	C2K080252001	C2K080378001	C2K130213001	C2K140137001
				Year	2002	2002	2002	2002	2002	2002	2002
Analysis	Number of Samples	90 UCL for the 50th Percentile	Waste Code	Reg Limit	Fargo,ND	St_ Charles,MO	Salt Lake City,UT	Oshawa,ON	Los Angeles,CA	Sacramento,CA	Sacramento,CA
BNA											
2,4,5-Trichlorophenol	159	ND	D041	400	<<<20	<<<<<<0.05	<<<0.05	<<<0.05	<<<0.05	<<<0.05	<<<0.05
2,4,6-Trichlorophenol	159	ND	D042	2	<<<20	<<<<<<0.05	<<<0.05	<<<0.05	<<<0.05	<<<0.05	<<<0.05
2,4-Dinitrotoluene	159	ND	D030	0.13	<<<0.05	<<<<<<0.05	<<<0.05	<<<0.05	<<<0.05	<<<0.05	<<<0.05
2-Methylphenol	159	ND	D023	200	0.057	1.5	0.072	0.71	0.059	<<<0.05	0.15
3+4-Methylphenol	159	ND	D024/25	200	0.12	4.3	0.17	1.5	0.18	0.36	0.48
Hexachlorobenzene	159	ND	D032	0.13	<<<0.05	<<<<<<0.05	<<<0.05	<<<0.05	<<<0.05	<<<0.05	<<<0.05
Hexachlorobutadiene	159	ND	D033	0.5	<<<0.05	<<<<<<0.05	<<<0.05	<<<0.05	<<<0.05	<<<0.05	<<<0.05
Hexachloroethane	159	ND	D034	3	<<<0.05	<<<<<<0.05	<<<0.05	<<<0.05	<<<0.05	<<<0.05	<<<0.05
Nitrobenzene	159	ND	D036	2	<<<0.05	<<<<<<0.05	<<<0.05	<<<0.05	<<<0.05	<<<0.05	0.082
Pentachlorophenol	159	ND	D037	100	<<<3	<<<<<<3	<<<3	<<<3	<<<3	<<<3	<<<3
Pyridine	159	ND	D038	5	<<<0.05	<<<<<<0.05	<<<0.05	<<<0.05	<<<0.05	<<<0.05	<<<0.05
METALS											
Arsenic	160	ND	D004	5	<<<1	<<<<<<1	<<<1	<<<1	<<<1	<<<1	<<<1
Barium	160	1.703	D005	100	<<<20	<<<<<<20	<<<20	<<<20	<<<20	<<<20	<<<20
Cadmium	160	0.421	D006	1	<<<0.5	<<<<<<0.5	**1.5**	<<<0.5	<<<0.5	**2.4**	0.84
Chromium	159	0.076	D007	5	<<<0.5	<<<<<<0.5	<<<0.5	<<<0.5	<<<0.5	<<<0.5	<<<0.5
Lead	160	1.2	D008	5	<<<0.3	1.2	1.9	1.1	0.38	3.1	1.3
Mercury	160	ND	D009	0.2	<<<0.033	<<<<<<0.033	<<<0.033	<<<0.033	<<<0.033	<<<0.033	<<<0.033
Selenium	160	ND	D010	1	<<<0.5	<<<<<<0.5	<<<0.5	<<<0.5	<<<0.5	<<<0.5	<<<0.5
Silver	160	ND	D011	5	<<<0.5	<<<<<<0.5	<<<0.5	<<<0.5	<<<0.5	<<<0.5	<<<0.5
Misc											
Flash Point	153	143	D001	140			156	158	151	148	153
pH	162	7.56	D002	2-12.5	7.9	8.9	6.5	8.2	8.6	7.8	9.4
VOA											
1,1-Dichloroethylene	160	ND	D029	0.7	<<<0.5	<<<<<<0.5	<<<0.5	<<<0.5	<<<0.5	<<<0.5	<<<0.5
1,2-Dichloroethane	160	ND	D028	0.5	<<<0.5	<<<<<<0.5	<<<0.5	<<<0.5	<<<0.5	<<<0.5	<<<0.5
1,4-Dichlorobenzene	160	ND	D027	7.5	<<<0.5	<<<<<<0.5	<<<0.5	<<<0.5	<<<0.5	<<<0.5	<<<0.5
Benzene	160	ND	D018	0.5	<<<0.5	<<<<<<0.5	<<<0.5	<<<0.5	<<<0.5	<<<0.5	<<<0.5
Carbon Tetrachloride	160	ND	D019	0.5	<<<0.5	<<<<<<0.5	<<<0.5	<<<0.5	<<<0.5	<<<0.5	<<<0.5
Chlorobenzene	160	ND	D021	100	<<<0.5	<<<<<<0.5	<<<0.5	<<<0.5	<<<0.5	<<<0.5	<<<0.5
Chloroform	160	ND	D022	6	<<<2	<<<<<<2	<<<2	<<<2	<<<2	<<<2	<<<2
Methyl Ethyl Ketone	160	ND	D035	200	0.68	<<<<<<0.5	<<<0.5	1.5	<<<0.5	<<<0.5	<<<0.5
Tetrachloroethylene	160	6.448	D039	0.7	<<<0.5	**24**	**88**	**20**	<<<0.5	**15**	**20**
Trichloroethylene	160	0.264	D040	0.5	<<<0.5	**0.58**	**0.94**	<<<0.5	<<<0.5	**0.57**	**1.6**
Vinyl Chloride	160	ND	D043	0.2	<<<0.2	<<<<<<0.2	<<<0.2	<<<0.2	<<<0.2	<<<0.2	<<<0.2

PWS Sludge-Dumpster Mud

				Sample Number	C2K140149001	C2K140276001	C2K140276001R2	C2K150365001	C2K220142001	C2K220396001	C2K270262001
				Year	2002	2002	2002	2002	2002	2002	2002
Analysis	Number of Samples	90 UCL for the 50th Percentile	Waste Code	Reg Limit	Oakland,CA	Santa Anna,CA	Santa Anna,CA	Wichita,KS	Omaha,NE	Highland,CA	El Monte,CA
BNA											
2,4,5-Trichlorophenol	159	ND	D041	400	<0.05	<0.05		<<0.05	<<<1	<<<0.1	<0.05
2,4,6-Trichlorophenol	159	ND	D042	2	<0.05	<0.05		<<0.05	<<<1	<<<0.1	<0.05
2,4-Dinitrotoluene	159	ND	D030	0.13	<0.05	**0.36**		<<0.05	<<<1	<<<0.1	<0.05
2-Methylphenol	159	ND	D023	200	0.22	0.28		0.34	<<<1	<<<0.1	0.071
3+4-Methylphenol	159	ND	D024/25	200	0.54	1.6		0.92	<<<1	<<<0.1	0.18
Hexachlorobenzene	159	ND	D032	0.13	<0.05	<0.025		<<0.05	<<<1	<<<0.1	<0.05
Hexachlorobutadiene	159	ND	D033	0.5	<0.05	<0.1		<<0.05	<<<1	<<<0.1	<0.05
Hexachloroethane	159	ND	D034	3	<0.05	<1		<<0.05	<<<1	<<<0.1	<0.05
Nitrobenzene	159	ND	D036	2	<0.05	<0.05		<<0.05	<<<1	<<<0.1	0.07
Pentachlorophenol	159	ND	D037	100	<3	<3		<<3	<<<5	<<<0.5	<3
Pyridine	159	ND	D038	5	<0.05	<0.05		<<0.05	<<<2	<<<0.2	<0.05
METALS											
Arsenic	160	ND	D004	5	<1	1.5		<<1	<<<0.5	<<<0.5	<0.5
Barium	160	1.703	D005	100	<20	**505**		<<20	<<<10	<<<10	<10
Cadmium	160	0.421	D006	1	0.91	**11.8**		**1.4**	0.36	<<<0.1	<0.25
Chromium	159	0.076	D007	5	<0.5	**519**		<<0.5	<<<0.5	<<<0.5	0.26
Lead	160	1.2	D008	5	1.4	**125**		4.4	<<<0.5	0.64	3.1
Mercury	160	ND	D009	0.2	<0.033	0.1		<<0.033	<<<0.0002	<<<0.0002	<0.002
Selenium	160	ND	D010	1	<0.5	0.6		<<0.5	<<<0.25	<<<0.25	<0.25
Silver	160	ND	D011	5	<0.5	1.8		<<0.5	<<<0.5	<<<0.5	<0.25
Misc											
Flash Point	153	143	D001	140	152	148			**139**	**139**	162
pH	162	7.56	D002	2-12.5	9.8	10.2			7.4	8.9	10.4
VOA											
1,1-Dichloroethylene	160	ND	D029	0.7	<0.5		<5	<<0.5	<<<0.05	<<<0.05	<0.02
1,2-Dichloroethane	160	ND	D028	0.5	<0.5		<5	<<0.5	<<<0.05	<<<0.05	<0.02
1,4-Dichlorobenzene	160	ND	D027	7.5	<0.5		<20	<<0.5	<<<0.05	<<<0.05	<0.02
Benzene	160	ND	D018	0.5	1		<5	**6.3**	<<<0.05	<<<0.05	<0.02
Carbon Tetrachloride	160	ND	D019	0.5	<0.5		<5	<<0.5	<<<0.05	<<<0.05	<0.02
Chlorobenzene	160	ND	D021	100	<0.5		<5	<<0.5	<<<0.05	<<<0.05	<0.02
Chloroform	160	ND	D022	6	<2		<20	<<2	<<<0.05	<<<0.05	<0.02
Methyl Ethyl Ketone	160	ND	D035	200	2.6		<20	<<0.5	0.18	<<<0.05	<0.02
Tetrachloroethylene	160	6.448	D039	0.7	**75**		**300**	**80**	0.19	0.59	0.022
Trichloroethylene	160	0.264	D040	0.5	**6.2**		<5	**4**	0.079	<<<0.05	<0.02
Vinyl Chloride	160	ND	D043	0.2	<0.2		<2	<<0.2	<<<0.05	<<<0.05	<0.02

PWS Sludge-Dumpster Mud

				Sample Number	C2K270275001	C2L200353001
				Year	2002	2002
Analysis	Number of Samples	90 UCL for the 50th Percentile	Waste Code	Reg Limit	Fresno,CA	Rohnert Park,CA
BNA						
2,4,5-Trichlorophenol	159	ND	D041	400	<0.05	
2,4,6-Trichlorophenol	159	ND	D042	2	<0.05	
2,4-Dinitrotoluene	159	ND	D030	0.13	<0.05	
2-Methylphenol	159	ND	D023	200	<0.05	
3+4-Methylphenol	159	ND	D024/25	200	0.092	
Hexachlorobenzene	159	ND	D032	0.13	<0.05	
Hexachlorobutadiene	159	ND	D033	0.5	<0.05	
Hexachloroethane	159	ND	D034	3	<0.05	
Nitrobenzene	159	ND	D036	2	<0.05	
Pentachlorophenol	159	ND	D037	100	<3	
Pyridine	159	ND	D038	5	<0.05	
METALS						
Arsenic	160	ND	D004	5	<1	<0.01
Barium	160	1.703	D005	100	<20	0.63
Cadmium	160	0.421	D006	1	<0.5	0.29
Chromium	159	0.076	D007	5	<0.5	0.014
Lead	160	1.2	D008	5	<0.3	0.78
Mercury	160	ND	D009	0.2	<0.033	<0.0002
Selenium	160	ND	D010	1	<0.5	0.022
Silver	160	ND	D011	5	<0.5	<0.005
Misc						
Flash Point	153	143	D001	140	157	
pH	162	7.56	D002	2-12.5	11.1	8.3
VOA						
1,1-Dichloroethylene	160	ND	D029	0.7	<0.5	<0.05
1,2-Dichloroethane	160	ND	D028	0.5	<0.5	<0.05
1,4-Dichlorobenzene	160	ND	D027	7.5	<0.5	<0.05
Benzene	160	ND	D018	0.5	<0.5	0.089
Carbon Tetrachloride	160	ND	D019	0.5	<0.5	<0.05
Chlorobenzene	160	ND	D021	100	<0.5	<0.05
Chloroform	160	ND	D022	6	<2	<0.05
Methyl Ethyl Ketone	160	ND	D035	200	<0.5	1
Tetrachloroethylene	160	6.448	D039	0.7	<0.5	0.16
Trichloroethylene	160	0.264	D040	0.5	<0.5	<0.05
Vinyl Chloride	160	ND	D043	0.2	<0.2	<0.05

PWS Tank Bottoms

				Sample Number	2010502	2017649	2025731	2026009	2026012	2056651	2058618
				Year	2000	2000	2000	2000	2000	2000	2000
Analysis	Number of Samples	90 UCL for the 50th Percentile	Waste Code	Reg Limit	Denton,TX	Grand Island,NE	Garden City,GA	Columbus,GA	Columbus,GA	Grand Island,NE	Salt Lake City,UT
BNA											
2,4,5-Trichlorophenol	35	ND	D041	400	<200	<0.10	<4.098	<200	<200	<0.10	<0.50
2,4,6-Trichlorophenol	35	ND	D042	2	<200	<0.10	<4.098	<200	<200	<0.10	<0.50
2,4-Dinitrotoluene	35	0.059	D030	0.13	<40	<0.020	<0.8196	<40	<40	<0.020	<0.10
2-Methylphenol	35	ND	D023	200	<200	<0.10	<13.8	<200	<200	<10.0	<50
3+4-Methylphenol	35	ND	D024/25	200	<200	<0.10	<13.9	<200	<200	<10.0	<50
Hexachlorobenzene	35	ND	D032	0.13	<40	<0.020	<0.8196	<40	<40	<0.020	<0.10
Hexachlorobutadiene	35	ND	D033	0.5	<200	<0.10	<4.098	<200	<200	<0.10	<0.50
Hexachloroethane	35	ND	D034	3	<200	<0.10	<4.098	<200	<200	<0.10	<0.50
Nitrobenzene	35	ND	D036	2	<200	<0.10	<4.098	<200	<200	<0.10	<0.50
Pentachlorophenol	35	ND	D037	100	<200	<0.10	<4.098	<200	<200	<0.10	<0.50
Pyridine	35	ND	D038	5	<200	<0.11	<4.38486	<210	<210	<0.11	<0.54
METALS											
Arsenic	35	ND	D004	5	<5.00	<0.500	<0.59	<5.00	<5.00	<0.500	<0.500
Barium	35	ND	D005	100	53.4	1.71	0.576	52.5	2.79	1.06	1.62
Cadmium	35	0.628	D006	1	**5.58**	<0.050	0.119	**2.39**	<0.500	<0.050	0.501
Chromium	35	ND	D007	5	**8.50**	<0.050	<0.059	**6.83**	0.764	0.109	0.086
Lead	35	1.6	D008	5	**82.7**	<0.400	<0.472	**474**	**49.1**	<0.400	1.18
Mercury	35	ND	D009	0.2	<0.10	<0.0008	<0.001584	<0.040	<0.040	<0.0008	0.004
Selenium	35	ND	D010	1	<0.45	<0.750	<0.73515	<0.008	<0.008	<0.750	<0.750
Silver	35	ND	D011	5	<0.500	<0.050	<0.059	<0.500	<0.500	<0.050	<0.050
Misc											
Flash Point	32	153	D001	140	>200	**135**	155	155	152	144	154
pH	35	7.84	D002	2-12.5	7.02	7.3	6.02	6.83	5.48	7.06	8.39
VOA											
1,1-Dichloroethylene	35	ND	D029	0.7	<4.0	<0.20	<0.204	<40	<40	<0.10	<0.20
1,2-Dichloroethane	35	ND	D028	0.5	<2.0	<0.20	<0.20	<20	<20	<0.10	<0.20
1,4-Dichlorobenzene	34	ND	D027	7.5	<5.0	<0.20	0.215	<50	<50	<0.10	<0.20
Benzene	35	ND	D018	0.5	<2.0	<0.20	0.236	<20	<20	<0.10	<0.20
Carbon Tetrachloride	35	ND	D019	0.5	<2.0	<0.20	<0.20	<20	<20	<0.10	<0.20
Chlorobenzene	35	ND	D021	100	<2.0	<0.20	<0.20	<20	<20	<0.10	<0.20
Chloroform	35	ND	D022	6	<2.0	<0.20	<0.20	<20	<20	<0.10	<0.20
Methyl Ethyl Ketone	35	0.839	D035	200	<5.0	<0.50	0.518	<50	<50	<0.20	6.608
Tetrachloroethylene	35	5.177	D039	0.7	<2.0	0.649	**13.441**	**1030**	**1080**	0.201	**1.571**
Trichloroethylene	35	ND	D040	0.5	<2.0	<0.20	**0.792**	**70.4**	**65.4**	<0.10	0.245
Vinyl Chloride	35	ND	D043	0.2	<1.5	<0.14	<0.1402	<15	<15	<0.10	<0.14

PWS Tank Bottoms

				Sample Number	2058619	2062072	2075713	2078405	2089530	2094348	2095598	2095607
				Year	2000	2000	2001	2001	2001	2001	2001	2001
Analysis	Number of Samples	90 UCL for the 50th Percentile	Waste Code	Reg Limit	Salt Lake City,UT	Sioux Falls,SD	Denton,TX	Fargo,ND	Columbus,GA	St_ Charles,MO	Charlotte,NC	Charlotte,NC
BNA												
2,4,5-Trichlorophenol	35	ND	D041	400	<0.50	<0.50	<200	<5.0	<300	<0.15	<0.15	<0.15
2,4,6-Trichlorophenol	35	ND	D042	2	<0.50	<0.50	<200	<2.0	<300	<0.15	<0.15	<0.15
2,4-Dinitrotoluene	35	0.059	D030	0.13	<0.10	<0.10	<40	<0.13	<40	<0.020	<0.020	<0.020
2-Methylphenol	35	ND	D023	200	<50	<50	<200	<5.0	<400	<10.0	<10.0	<10.0
3+4-Methylphenol	35	ND	D024/25	200	<50	<50	<200	<5.0	<500	<10.0	<10.0	<10.0
Hexachlorobenzene	35	ND	D032	0.13	<0.10	<0.10	<40	<0.025	<40	<0.020	<0.020	<0.020
Hexachlorobutadiene	35	ND	D033	0.5	<0.50	<0.50	<200	<0.10	<100	<0.050	<0.050	<0.050
Hexachloroethane	35	ND	D034	3	<0.50	<0.50	<200	<1.0	<200	<0.10	<0.10	<0.10
Nitrobenzene	35	ND	D036	2	<0.50	<0.50	<200	<0.40	<200	<0.10	<0.10	<0.10
Pentachlorophenol	35	ND	D037	100	<0.50	<0.50	<200	<5.0	<520	<0.26	<0.26	<0.26
Pyridine	35	ND	D038	5	<0.54	<0.54	<210	<1.0	<580	<0.25	<0.25	<0.25
METALS												
Arsenic	35	ND	D004	5	<0.500	<0.500	<5.00	<5.00	<5.00	<0.500	<0.500	<0.500
Barium	35	ND	D005	100	1.03	1.04	19.4	3.89	0.907	0.787	0.599	8.23
Cadmium	35	0.628	D006	1	0.514	0.647	**4.12**	<0.500	<0.500	**2.19**	0.408	**1.06**
Chromium	35	ND	D007	5	<0.050	0.124	2.50	<0.500	<0.500	0.057	<0.050	0.609
Lead	35	1.6	D008	5	0.640	0.919	**52.3**	4.01	**11.4**	1.63	<0.400	**11.8**
Mercury	35	ND	D009	0.2	<0.0008	<0.0008	<0.10	<0.100	<0.10	<0.0008	<0.0008	<0.0008
Selenium	35	ND	D010	1	<0.750	<0.750	<0.45	<0.45	<0.45	<0.750	<0.750	<0.750
Silver	35	ND	D011	5	<0.050	<0.050	<0.500	<0.500	<0.500	<0.050	<0.050	<0.050
Misc												
Flash Point	32	153	D001	140	172	143	>200	152	156	**130**	**138**	**138**
pH	35	7.84	D002	2-12.5	8.6	7.23	8.05	7.06	6.27	7.77	10.05	8.50
VOA												
1,1-Dichloroethylene	35	ND	D029	0.7	<0.20	<0.20	<2.0	<1.6	<2.0	<0.20	<0.20	<0.20
1,2-Dichloroethane	35	ND	D028	0.5	<0.20	<0.20	<1.0	<0.80	<1.0	<0.20	<0.20	<0.20
1,4-Dichlorobenzene	34	ND	D027	7.5	<0.20	<0.20	<2.5	2.7	<2.5	<0.20	<0.20	<0.20
Benzene	35	ND	D018	0.5	<0.20	<0.20	1.1	**1.5**	**4.4**	<0.20	<0.20	<0.20
Carbon Tetrachloride	35	ND	D019	0.5	<0.20	<0.20	<1.0	<0.80	<1.0	<0.20	<0.20	<0.20
Chlorobenzene	35	ND	D021	100	<0.20	<0.20	<1.0	<0.80	<1.0	<0.20	<0.20	<0.20
Chloroform	35	ND	D022	6	<0.20	<0.20	<1.0	<0.80	<1.0	<0.20	<0.20	<0.20
Methyl Ethyl Ketone	35	0.839	D035	200	<0.50	<0.50	<2.5	<2.0	140	<0.50	0.72	<0.50
Tetrachloroethylene	35	5.177	D039	0.7	0.243	0.232	**1.7**	**1880**	**1160**	**2.561**	**0.774**	**5.177**
Trichloroethylene	35	ND	D040	0.5	<0.20	<0.20	<1.0	**7.6**	**132**	<0.20	0.209	0.436
Vinyl Chloride	35	ND	D043	0.2	<0.14	<0.14	<0.75	<0.60	<0.75	<0.14	<0.14	<0.14

PWS Tank Bottoms

				Sample Number	2098618	2106938	2114605	2131239	2136296	2144465	9905718	9917970
				Year	2001	2001	2001	2002	2002	2002	1999	1999
Analysis	Number of Samples	90 UCL for the 50th Percentile	Waste Code	Reg Limit	Cohoes,NY	Grand Island,NE	Sioux Falls,SD	Los Angeles,CA	Denton,TX	Macon,GA	Denton,TX	Columbus,GA
BNA												
2,4,5-Trichlorophenol	35	ND	D041	400	<0.15	<0.15	<0.15	<0.75	<300	<0.15	<200	<14.93
2,4,6-Trichlorophenol	35	ND	D042	2	<0.15	<0.15	<0.15	<0.75	<300	<0.15	<300	<22.0964
2,4-Dinitrotoluene	35	0.059	D030	0.13	<0.020	<0.020	<0.020	<0.10	<40	<0.020	<130	<9.92845
2-Methylphenol	35	ND	D023	200	<10.0	<10.0	<10.0	<50	<400	<10.0	<200	<14.55675
3+4-Methylphenol	35	ND	D024/25	200	<10.0	<10.0	<10.0	<50	<400	<10.0	<260	<19.1104
Hexachlorobenzene	35	ND	D032	0.13	<0.020	<0.020	<0.020	<0.10	<40	<0.020	<220	<16.5723
Hexachlorobutadiene	35	ND	D033	0.5	<0.10	<0.050	<0.10	<0.50	<100	<0.050	<230	<16.8709
Hexachloroethane	35	ND	D034	3	<0.10	<0.10	<0.10	<0.50	<200	<0.10	<200	<14.85535
Nitrobenzene	35	ND	D036	2	<0.10	<0.10	<0.10	<0.50	<200	<0.10	<190	<14.40745
Pentachlorophenol	35	ND	D037	100	<0.26	<0.26	<0.26	<1.3	<520	<0.26	<470	<35.16015
Pyridine	35	ND	D038	5	<0.25	<0.25	<0.25	<1.3	<500	<0.25	<590	<43.8942
METALS												
Arsenic	35	ND	D004	5	<0.500	<0.500	<0.500	<0.500	<5.00	<0.500	<5.00	<0.815
Barium	35	ND	D005	100	1.59	0.977	1	2.50	53.4	1.75	20.6	1.638
Cadmium	35	0.628	D006	1	0.155	<0.050	0.628	0.473	**11.1**	0.366	**2.31**	0.401
Chromium	35	ND	D007	5	<0.050	0.245	<0.050	0.080	**13.3**	<0.050	1.54	0.162
Lead	35	1.6	D008	5	1.00	<0.400	<0.400	0.413	**181**	<0.400	**55.1**	**52.193**
Mercury	35	ND	D009	0.2	<0.0008	<0.0008	<0.0008	<0.0008	0.043	<0.0008	<0.100	<0.007744
Selenium	35	ND	D010	1	<0.750	<0.750	<0.750	<0.750	<0.015	<0.750	<0.452	<0.729
Silver	35	ND	D011	5	<0.050	<0.050	<0.050	<0.050	1.01	<0.050	<0.500	<0.0815
Misc												
Flash Point	32	153	D001	140	>200	153	146	>200	>200	167	191	>200
pH	35	7.84	D002	2-12.5	6.94	7.84	7.66	10.45	7.90	7.10	8.78	5.45
VOA												
1,1-Dichloroethylene	35	ND	D029	0.7	<0.20	<0.20	<0.20	<0.10	<0.80	<0.20	<2.0	<0.39
1,2-Dichloroethane	35	ND	D028	0.5	<0.20	<0.20	<0.20	<0.10	<0.40	<0.20	<2.0	<0.29
1,4-Dichlorobenzene	34	ND	D027	7.5	<0.20	<0.20	<0.20	<0.10	<1.0	<0.20	3.662	<0.44
Benzene	35	ND	D018	0.5	<0.20	<0.20	<0.20	<0.10	<0.40	<0.20	<5.0	0.365
Carbon Tetrachloride	35	ND	D019	0.5	<0.20	<0.20	<0.20	<0.10	<0.40	<0.20	<2.0	<0.29
Chlorobenzene	35	ND	D021	100	<0.20	<0.20	<0.20	<0.10	<0.40	<0.20	<2.0	<0.29
Chloroform	35	ND	D022	6	<0.20	<0.20	<0.20	<0.10	<0.40	<0.20	<2.0	<0.29
Methyl Ethyl Ketone	35	0.839	D035	200	<0.50	<1.0	<1.0	<0.50	<1.0	<1.0	<10.0	0.839
Tetrachloroethylene	35	5.177	D039	0.7	<0.20	0.631	**1.714**	**8**	<0.40	0.2	**3.023**	**26.79**
Trichloroethylene	35	ND	D040	0.5	<0.20	<0.20	<0.20	**11.5**	<0.40	<0.20	<2.0	**1.721**
Vinyl Chloride	35	ND	D043	0.2	<0.14	<0.14	<0.14	<0.10	<0.30	<0.14	<2.0	<0.208

PWS Tank Bottoms

				Sample Number	9918376	9929859	9930620	9941313	C2J010135001	C2J040351001	C2J150155001	C2J150155001R2
				Year	1999	1999	1999	1999	2002	2002	2002	2002
Analysis	Number of Samples	90 UCL for the 50th Percentile	Waste Code	Reg Limit	Macon,GA	Bismarck,ND	Sioux Falls,SD	Avon,NY	Clackamas,OR	Grand Island,NE	Avon,NY	Avon,NY
BNA												
2,4,5-Trichlorophenol	35	ND	D041	400	<1.0	<0.10	<0.10	<0.10	<<<<<0.05	<<<<<<0.05	<<<<<<0.05	
2,4,6-Trichlorophenol	35	ND	D042	2	<1.5	<0.15	<0.15	<0.15	<<<<<0.05	<<<<<<0.05	<<<<<<0.05	
2,4-Dinitrotoluene	35	0.059	D030	0.13	<0.67	<0.067	<0.067	<0.067	<<<<<0.05	<<<<<<0.05	<<<<<<0.05	
2-Methylphenol	35	ND	D023	200	<0.98	<0.098	0.174	0.444	0.4	0.079	0.2	
3+4-Methylphenol	35	ND	D024/25	200	<1.3	<0.13	0.607	0.53	0.14	0.14	1.3	
Hexachlorobenzene	35	ND	D032	0.13	<1.1	<0.11	<0.11	<0.11	<<<<<0.05	<<<<<<0.05	<<<<<<0.025	
Hexachlorobutadiene	35	ND	D033	0.5	<1.1	<0.11	<0.11	<0.11	<<<<<0.05	<<<<<<0.05	<<<<<<0.1	
Hexachloroethane	35	ND	D034	3	<1.00	<0.10	<0.10	<0.10	<<<<<0.05	<<<<<<0.05	<<<<<<1	
Nitrobenzene	35	ND	D036	2	<0.97	<0.097	<0.097	<0.097	<<<<<0.05	<<<<<<0.05	<<<<<<0.05	
Pentachlorophenol	35	ND	D037	100	<2.4	<0.24	<0.24	<0.24	<<<<<3	<<<<<<3	<<<<<<3	
Pyridine	35	ND	D038	5	<2.9	<0.29	<0.29	<0.29	<<<<<0.05	<<<<<<0.05	<<<<<<0.05	
METALS												
Arsenic	35	ND	D004	5	<0.500	<0.500	<0.500	<0.500	<<<<<1	<<<<<<1	<<<<<<1	
Barium	35	ND	D005	100	2.21	0.937	0.863	6.06	<<<<<20	<<<<<<20	**103**	
Cadmium	35	0.628	D006	1	0.189	**1.01**	**1.03**	0.417	**1.8**	<<<<<<0.5	**2.3**	
Chromium	35	ND	D007	5	<0.050	<0.050	<0.050	<0.050	<<<<<0.5	<<<<<<0.5	**18.2**	
Lead	35	1.6	D008	5	0.443	0.781	0.449	1.24	1.6	1.5	**75.2**	
Mercury	35	ND	D009	0.2	<0.0008	0.0009	0.0008	<0.0008	<<<<<0.033	<<<<<<0.033	<<<<<<0.033	
Selenium	35	ND	D010	1	<0.750	<0.750	<0.750	<0.750	<<<<<0.5	<<<<<<0.5	<<<<<<0.5	
Silver	35	ND	D011	5	<0.050	<0.050	<0.050	<0.050	<<<<<0.5	<<<<<<0.5	3.4	
Misc												
Flash Point	32	153	D001	140	>200	170	170	>200	143	156	145	
pH	35	7.84	D002	2-12.5	6.59	8.53	7.76	8.27	7.7	7.6	8	
VOA												
1,1-Dichloroethylene	35	ND	D029	0.7	<0.20	<2.0	<0.20	<0.20	<<<<<2.5	<<<<<<0.5		<<<<<<10
1,2-Dichloroethane	35	ND	D028	0.5	<0.20	<2.0	<0.20	<0.20	<<<<<2.5	<<<<<<0.5		<<<<<<10
1,4-Dichlorobenzene	34	ND	D027	7.5	<0.20	<2.0	<0.20	<0.20		<<<<<<0.5		<<<<<<10
Benzene	35	ND	D018	0.5	<0.20	<2.0	<0.20	<0.20	<<<<<2.5	<<<<<<0.5		<<<<<<10
Carbon Tetrachloride	35	ND	D019	0.5	<0.20	<2.0	<0.20	<0.20	<<<<<2.5	<<<<<<0.5		<<<<<<10
Chlorobenzene	35	ND	D021	100	<0.20	<2.0	<0.20	<0.20	<<<<<2.5	<<<<<<0.5		<<<<<<10
Chloroform	35	ND	D022	6	<0.20	<2.0	<0.20	<0.20	<<<<<2.5	<<<<<<2		<<<<<<40
Methyl Ethyl Ketone	35	0.839	D035	200	<0.50	<5.0	<0.50	<0.50	<<<<<2.5	<<<<<<0.5		<<<<<<10
Tetrachloroethylene	35	5.177	D039	0.7	**3.73**	**7.7**	0.43	0.48	<<<<<2.5	**43**		**710**
Trichloroethylene	35	ND	D040	0.5	0.27	<2.0	<0.20	0.33	<<<<<2.5	**0.89**		**45**
Vinyl Chloride	35	ND	D043	0.2	<0.14	<1.4	<0.14	<0.14	<<<<<5	<<<<<<0.2		<<<<<<4

PWS Tank Bottoms

				Sample Number	C2J170116001	C2K010364001	C2K010364001R2	C2K060113001	C2K060321002	C2K060321002R2	C2L030249001
				Year	2002	2002	2002	2002	2002	2002	2002
Analysis	Number of Samples	90 UCL for the 50th Percentile	Waste Code	Reg Limit	Syracuse,NY	Cohoes,NY	Cohoes,NY	Salt Lake City,UT	No_ Amityville,NY	No_ Amityville,NY	Omaha,NE
BNA											
2,4,5-Trichlorophenol	35	ND	D041	400	<<<<<<0.05	<<<<<<0.05		<<<<<<2	<<<<<<0.05		<0.5
2,4,6-Trichlorophenol	35	ND	D042	2	<<<<<<0.05	<<<<<<0.05		<<<<<<2	<<<<<<0.05		<0.5
2,4-Dinitrotoluene	35	0.059	D030	0.13	<<<<<<0.05	<<<<<<0.05		<<<<<<2	0.059		<0.5
2-Methylphenol	35	ND	D023	200	0.29	0.43		<<<<<<2	2.3		<0.5
3+4-Methylphenol	35	ND	D024/25	200	0.44	0.67		<<<<<<2	2.9		0.7
Hexachlorobenzene	35	ND	D032	0.13	<<<<<<0.05	<<<<<<0.025		<<<<<<2	<<<<<<0.025		<0.5
Hexachlorobutadiene	35	ND	D033	0.5	<<<<<<0.05	<<<<<<0.1		<<<<<<2	<<<<<<0.1		<0.5
Hexachloroethane	35	ND	D034	3	<<<<<<0.05	<<<<<<1		<<<<<<2	<<<<<<1		<0.5
Nitrobenzene	35	ND	D036	2	<<<<<<0.05	<<<<<<0.05		<<<<<<2	<<<<<<0.05		<0.5
Pentachlorophenol	35	ND	D037	100	<<<<<<3	<<<<<<3		<<<<<<10	<<<<<<3		<2.5
Pyridine	35	ND	D038	5	<<<<<<0.05	<<<<<<0.05		<<<<<<4	0.11		<1
METALS											
Arsenic	35	ND	D004	5	<<<<<<1	<<<<<<1		<<<<<<0.5	<<<<<<1		<0.5
Barium	35	ND	D005	100	<<<<<<20	<<<<<<20		<<<<<<10	<<<<<<20		<10
Cadmium	35	0.628	D006	1	<<<<<<0.5	<<<<<<0.5		0.64	<<<<<<0.5		0.34
Chromium	35	ND	D007	5	<<<<<<0.5	<<<<<<0.5		<<<<<<0.5	<<<<<<0.5		<0.5
Lead	35	1.6	D008	5	0.77	0.62		0.8	2.5		0.86
Mercury	35	ND	D009	0.2	<<<<<<0.033	<<<<<<0.033		0.0015	<<<<<<0.033		<0.0002
Selenium	35	ND	D010	1	<<<<<<0.5	<<<<<<0.5		<<<<<<0.25	<<<<<<0.5		<0.25
Silver	35	ND	D011	5	<<<<<<0.5	<<<<<<0.5		<<<<<<0.5	<<<<<<0.5		<0.5
Misc											
Flash Point	32	153	D001	140	163	156					
pH	35	7.84	D002	2-12.5	7.7	7.4		8.8			8
VOA											
1,1-Dichloroethylene	35	ND	D029	0.7	<<<<<<0.5		<<<<<<20	<<<<<<0.05		<<<<<<25	<0.05
1,2-Dichloroethane	35	ND	D028	0.5	<<<<<<0.5		<<<<<<20	<<<<<<0.05		<<<<<<25	<0.05
1,4-Dichlorobenzene	34	ND	D027	7.5	<<<<<<0.5		<<<<<<20	<<<<<<0.05		<<<<<<25	<0.05
Benzene	35	ND	D018	0.5	<<<<<<0.5		<<<<<<20	<<<<<<0.05		<<<<<<25	<0.05
Carbon Tetrachloride	35	ND	D019	0.5	<<<<<<0.5		<<<<<<20	<<<<<<0.05		<<<<<<25	<0.05
Chlorobenzene	35	ND	D021	100	<<<<<<0.5		<<<<<<20	<<<<<<0.05		<<<<<<25	<0.05
Chloroform	35	ND	D022	6	<<<<<<2		<<<<<<80	<<<<<<0.05		<<<<<<100	<0.05
Methyl Ethyl Ketone	35	0.839	D035	200	<<<<<<0.5		<<<<<<20	0.22		<<<<<<25	0.31
Tetrachloroethylene	35	5.177	D039	0.7	**15**		**710**	0.29		**3000**	1.3
Trichloroethylene	35	ND	D040	0.5	**2.3**		<<<<<<20	0.097		**110**	0.35
Vinyl Chloride	35	ND	D043	0.2	<<<<<<0.2		<<<<<<8	<<<<<<0.05		<<<<<<10	<0.05

Table C-1
Parameters and Rationale For Hazardous Waste Analysis

Table C-1

Parameters And Rationale For Hazardous Waste Analyses

Hazardous Waste	Parameters *	Rationale
1. Used Parts Washer Solvents	Flash Point	Ignitable Characteristics (D001)
	TCLP	Contains components which may exceed the limits listed in 40 CFR 261.24 (7045.0131 Subpart 7)
2. Solvent Tank Bottoms	Same as number 1	Same as number 1
3. Dumpster/Drum Washer Sediment	Same as number 1	Same as number 1
4. Used Immersion Cleaner	TCLP	Contains components which may exceed the limits listed in 40 CFR 261.24 (7045.0131 Subpart 7)
5. Dry Cleaning Wastes	Perchloroethylene 1,1,2-trichloro-1,2,2-trifluoroethane	May contain these compounds (F002)
6. Paint Wastes	Flash Point	Ignitable Characteristic (D001)
	Toluene, xylene, methyl ethyl ketone, acetone, isopropanol, methanol, ethanol, normal butyl acetate, isobutyl acetate	May contain these components (F003 and F005)
	TCLP	Contains components which may exceed the limits listed in 40 CFR 261.24 (7045.0131 Subpart 7)
7. Industrial Solvents	TCLP, general composition, pH, PCB content, BTU value, metals, chlorinated or halogenated solvents	Analyses will vary based upon the waste stream composition
8. Used Antifreeze	Perchloroethylene and led	Contains components which may exceed the limits listed in 40 CFR 261.24 (7045.0131 Subpart 7)

Notes: TCLP = Toxicity Characteristic Leaching Procedure.

- Earlier sample analyses indicated the parameters listed are the only ones of concern.

Table C-2
Parameters and Test Methods

Table C-2

Parameters And Test Methods

Parameter	Test Method	Reference
Flash Point	Setaflash closed cup tester	U.S. EPA SW 846, Third Ed., Method 1020 (ASTM Method D327-78) or an equivalent method
Volatile and Semivolatile Organic Compounds	Gas Chromatography (GC) and/or Mass Spectroscopy	U.S. EPA Methods 8260 and/or 8270, or equivalent methods
Toxicity Characteristics	TCLP	U.S. EPA SW 846, Third Ed., Method 1311 or an equivalent method
Other	TCLP	Methods as specified in U.S. EPA SW 846 or equivalent method

Notes: TCLP = Toxicity Characteristic Leaching Procedure.

Table C-3
Methods Used To Sample Hazardous Waste

Table C-3

Methods Used to Sample Hazardous Wastes

Hazardous Wastes	Reference for Sampling	Description of Sampling Method	Sampler
ed Parts Washer Solvent	Sampling a Tank "Samples & Sampling Procedures for Hazardous Waste Streams" EPA-600/2-80-018	Test Methods for the Evaluation of Solid Waste Physical/Chemical Methods, SW846, U.S. EPA, 3rd Ed. Section 1.2.1.1	For tanks-Coliwasa Tube
ttom Sediment from the ent Parts Washer Solvent nk	Same as Number 1	Same as Number 1	Same as Number 1
mpster/Drum Washer diment	Sampling a Drum "Samples & Sampling Procedures for Hazardous Waste Streams" EPA-600/2-80-018	Same as Number 1	Representative composite sample using a Coliwasa Tube
ed Immersion Cleaner	Same as Number 3	Same as Number 1	Same as Number 3
y Cleaning Wastes	Same as Number 3	Same as Number 1	Same as Number 3
int Waste	Same as Number 3	Same as Number 1	Same as Number 3
ent Antifreeze	Same as Number 1	Same as Number 1	Same as Number 1

APPENDIX D
EQUIPMENT INFORMATION

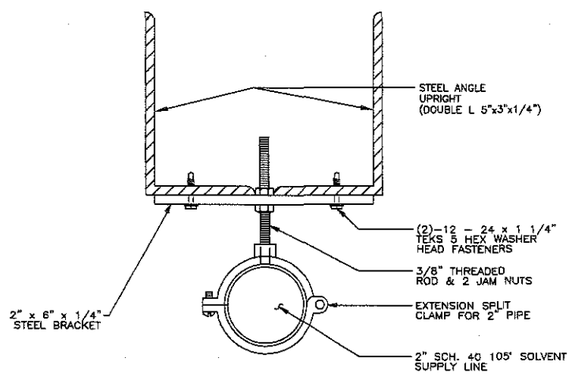

1 / 231 BRACKET DETAIL

SCALE: 1/2" = 1"

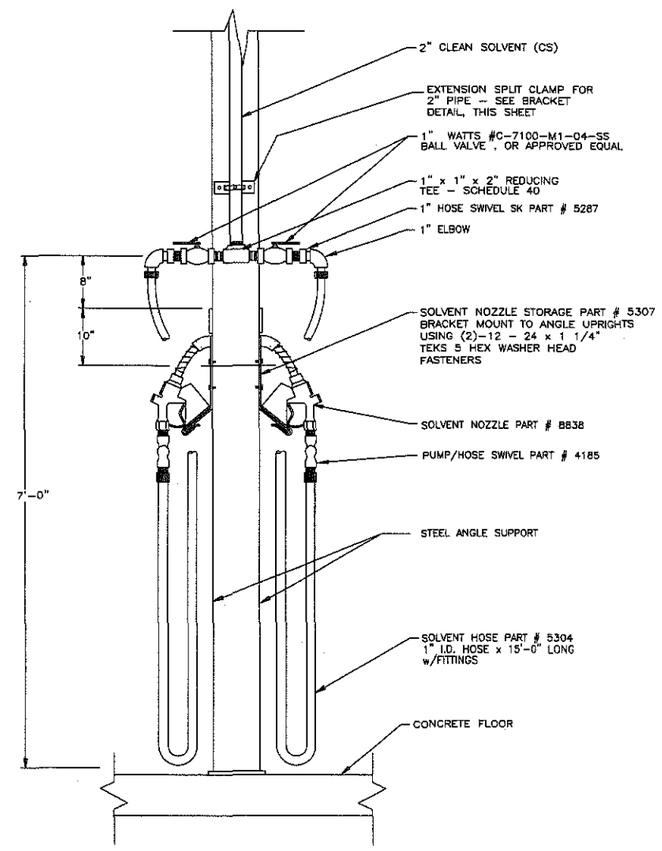

2 / 231 DOUBLE NOZZLE INSTALLATION DETAIL

SCALE: 1" = 1'-0"

LICENSED PROFESSIONAL ENGINEER JACK G. BUTBACH 062-046031 ILLINOIS

signature

4/28/03
date

A TriHydro Corporation representative conducted an on-site field inspection to verify equipment, components, dimensions and existing conditions on April 10, 2003. Items inaccessible to visual observations were not field verified during this inspection. Revisions to these drawings (based on the inspection) were coordinated through the Safety-Kleen Engineering Department, as necessary.

This Drawing Representative of old Return/Fill Station Dispenser. No dispenser installed in new Return/Fill Station area at time of April 10, 2003 inspection.

TriHydro Corporation
Engineering and Environmental Consulting
920 Sheridan Street
Laramie, Wyoming 82070

GENERAL NOTES

PROPRIETARY STATEMENT

THIS DRAWING IS THE EXCLUSIVE PROPERTY OF SAFETY-KLEEN CORP. AND IS PROPRIETARY AND CONFIDENTIAL INFORMATION. THIS DRAWING AND THE INFORMATION CONTAINED THEREIN MUST NOT BE DUPLICATED, USED, DIVULGED, REPRODUCED, COPIED, DISCLOSED OR APPROPRIATED IN WHOLE OR IN PART FOR ANY PURPOSE OTHER THAN AS EXPRESSLY AUTHORIZED BY SAFETY-KLEEN CORP. THIS DRAWING MUST BE RETURNED PROMPTLY UPON REQUEST.

Project Solutions Companies
1390 Boone Industrial Drive • Suite 200 • Columbia • MO 65202
• Phone: (573) 443-7100 • Fax: (573) 443-7181 •

FIGURE D-1

NO.	DESCRIPTION	BY	CHK	APPR	DATE

REVISIONS

TITLE

SOLVENT DISPENSER TREE INSTALLATION DETAILS

SAFETY-KLEEN CORP.
777 BIG TIMBER ROAD ELGIN, ILLINOIS 60123 PHONE 708-697-8460

SCALE	BY	CHKD	APPROVED	OPERATIONS	DATE
AS SHOWN	CWM	WJG			12-10-93

SERVICE CENTER LOCATION	SC-DWG-REV NO.	SHEET NO.
PEKIN, IL	513601-231-0	

12-9-93 1:03 pm IC .DWG 9273.13b

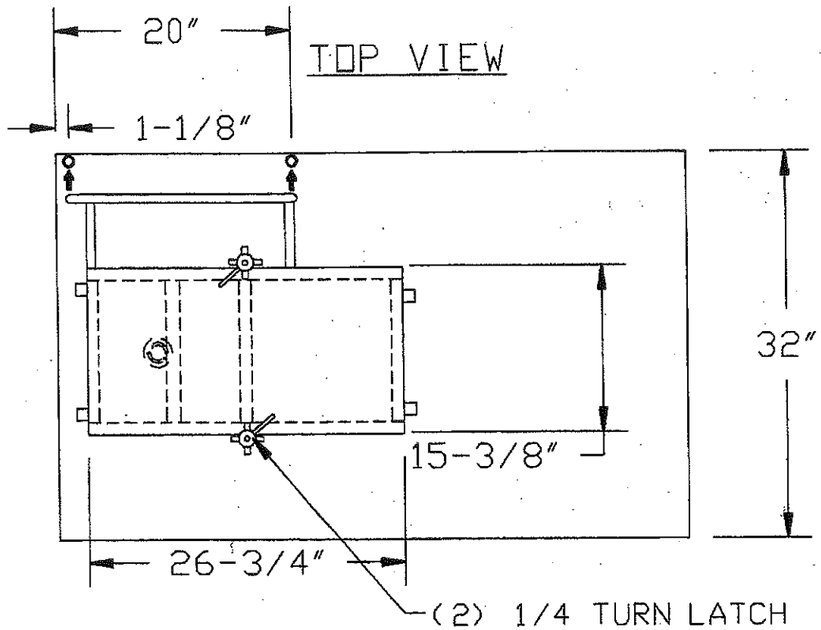

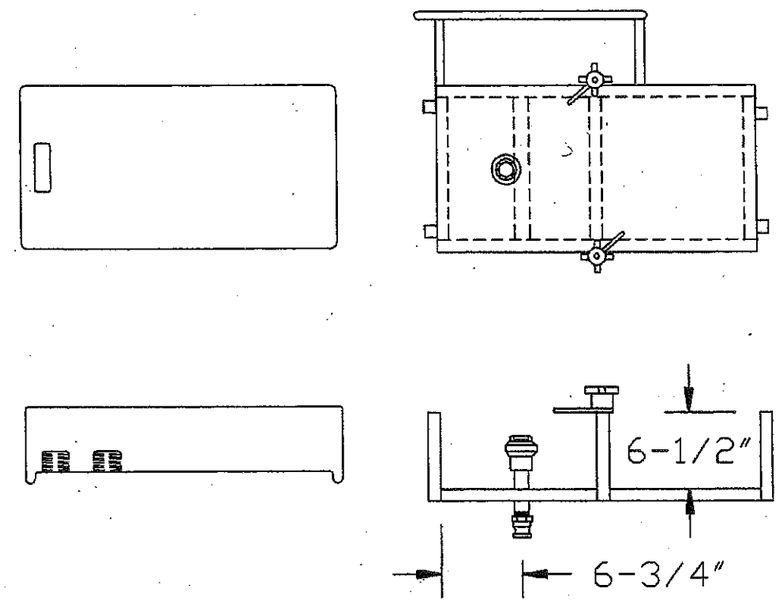

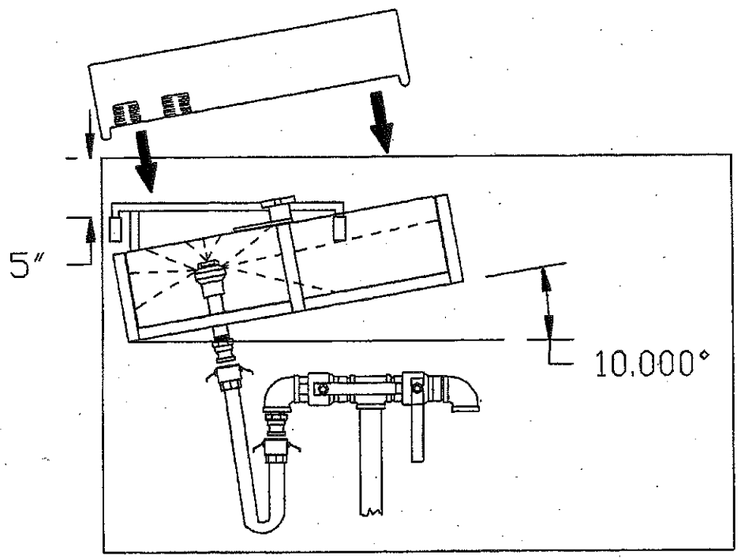

FRONT VIEW

PROPOSED OPERATIONS:

1. INSERT BRAKE CLEANER TANK BRACKET INTO EXISTING 3/4″ PIPES ON BACK WALL.
2. COUPLE 3/4″ HOSE ASSEMBLY TO MALE KAMLOCK COUPLER AT PIPING MANIFOLD AND TO MALE COUPLER ON TANK CLEANER BRACKET.
3. CLOSE VALVE TO DRUM WASHER AND OPEN VALVE TO TANK CLEANER. POSITION BRAKE CLEANER TANK INTO BRACKET.
4. TURN QUARTER TURN LATCHES TO SECURE TANK TO BRACKET.
5. CLOSE LID AND PUSH START PUSH BUTTON. PUMP WILL NOT OPERATE IF LID IS NOT IN CLOSED POSITION WITH LID LIMIT SWITCH MADE.

Project Solutions Companies

FIGURE D-2

1390 Boone Industrial Drive • Suite 200 • Columbia • MO 65202 • Phone: (573) 443-7100 • Fax: (573) 443-7181 •

TITLE

DRUM WASHER BRACKET

SAFETY-KLEEN CORP.

1000 N. RANDALL ROAD ELGIN, ILLINOIS 60123 PHONE 708-697-8460

SCALE	BY	CHKD	APPROVED	OPERATIONS	DATE
NONE	SEMLER			OP.APPR.	2-10-03

SERVICE CENTER LOCATION	SC-DWG. NO.-REV. NO.	SHEET NO.
STANDARD	BSD-944	

MODIFY EXISTING TOP LOADING DRUM WASHER TO SLIDING DOOR AS SHOWN HERE.

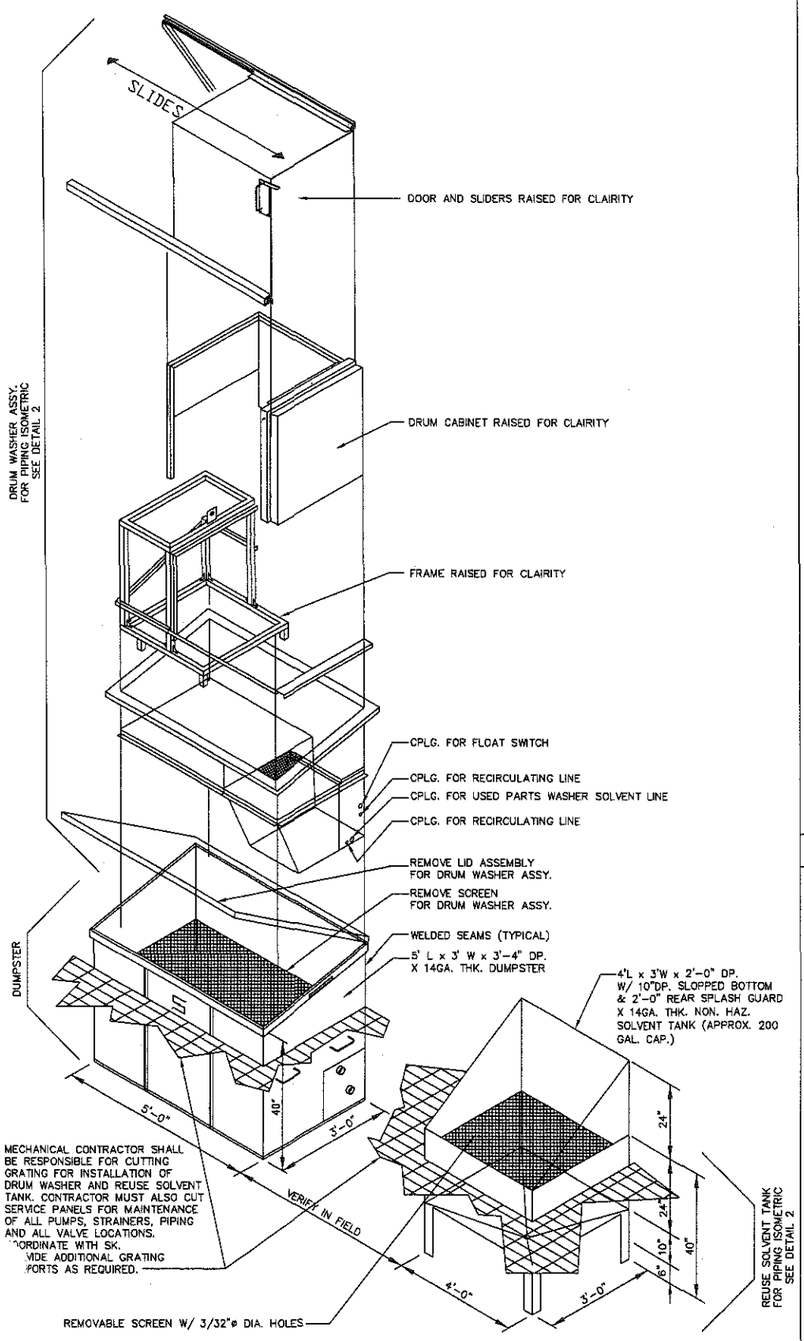

DUMPSTER/DRUM WASHER/REUSE SOLVENT TANK ASSY – DETAIL 1

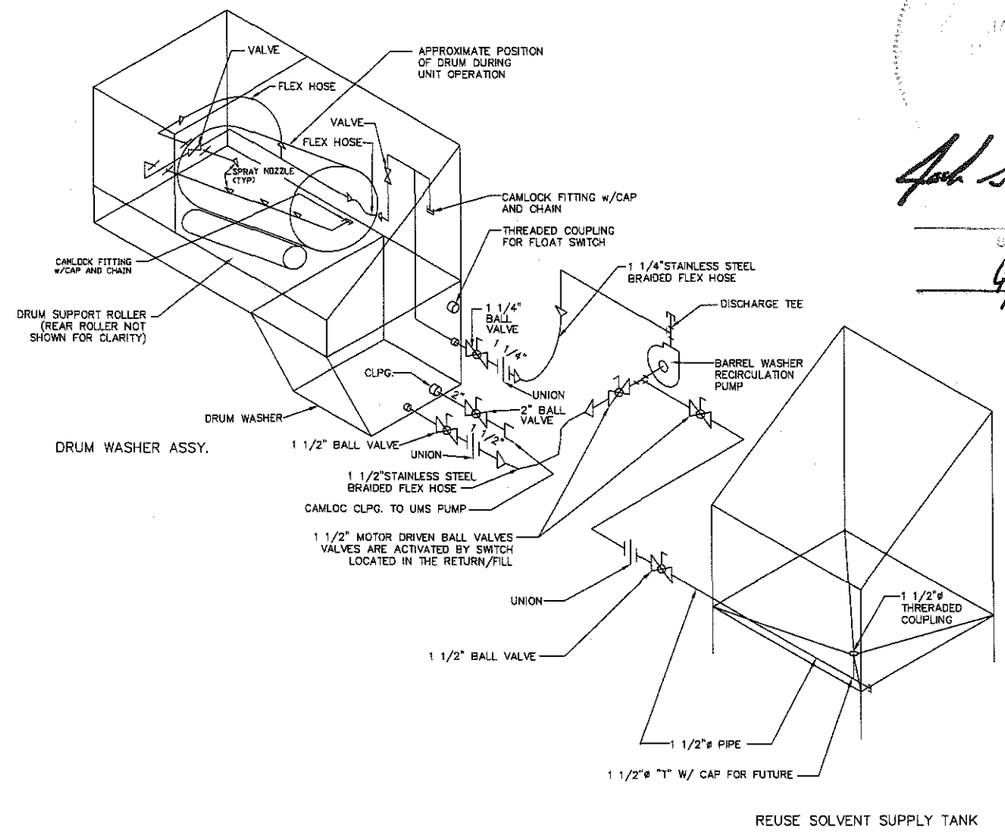

DRUM WASHER/ REUSE SOLVENT SUPPLY TANK PIPING ISOMETRIC – DETAIL 2

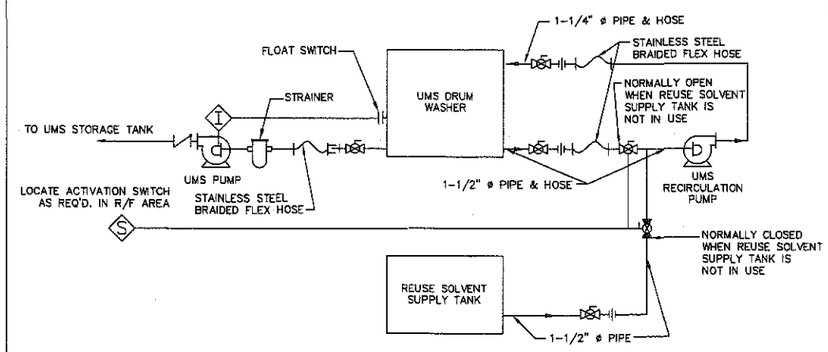

DRUM WASHER/REUSE SOLVENT SUPPLY TANK SCHEMATIC – DETAIL 3

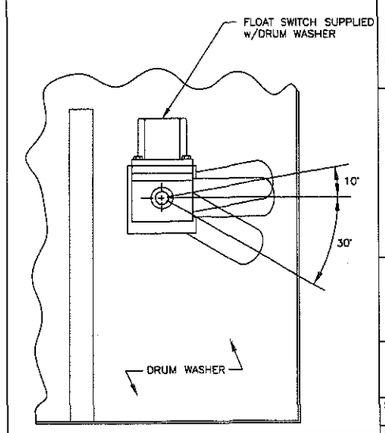

FLOAT SWITCH – DETAIL 4

Signature

4/28/03
date

GENERAL NOTES

A TriHydro Corporation representative conducted an on-site field inspection to verify equipment, components, dimensions and existing conditions on April 10, 2003. Items inaccessible to visual observations were not field verified during this inspection. Revisions to these drawings (based on the inspection) were coordinated through the Safety-Kleen Engineering Department, as necessary.

This drawing representative of old return/fill station. Equipment not yet installed in new return/fill area at time of April 10, 2003 inspection.

TriHydro Corporation
Engineering and Environmental Consulting
920 Sheridan Street
Laramie, Wyoming 82070

REVISIONS

NO.	DESCRIPTION	BY	CHK	APPR	DATE
A	RELEASED TO DOD FOR REVIEW	MBH	KJM	DOD	040797
B	REVISED PER COMMENTS	MBH	KJM	DOD	040797
C	ADDED SOLENOID VALVES – RMVD. FLOAT SWITCH DETAIL & NOTES	MBH	KJM	DOD	042497
D	MODIFIED FOR PEKIN	JEK	GPM	GPM	030803

PROPRIETARY STATEMENT

THIS DRAWING IS THE EXCLUSIVE PROPERTY OF SAFETY-KLEEN CORP. AND IS PROPRIETARY AND CONFIDENTIAL INFORMATION. THIS DRAWING AND THE INFORMATION CONTAINED THEREIN MUST NOT BE DUPLICATED, USED, DIVULGED, REPRODUCED, COPIED, DISCLOSED OR APPROPRIATED IN WHOLE OR IN PART FOR ANY PURPOSE OTHER THAN AS EXPRESSLY AUTHORIZED BY SAFETY-KLEEN CORP. THIS DRAWING MUST BE RETURNED PROMPTLY UPON REQUEST.

Project Solutions Companies

FIGURE D-3

1390 Boone Industrial Drive • Suite 200 • Columbia • MO 65202
• Phone: (573) 443-7100 • Fax: (573) 443-7161 •

TITLE

DRUM WASHER
SCHEMATIC AND DETAILS

Safety-Kleen Corp.
ONE BRINKMAN WAY ELGIN, ILLINOIS 60123
PHONE (847)697-8460

SCALE	BY	CHKD	APPROVED	OPERATIONS	DATE
AS SHOWN	PROJSOL	GPM	GPM	–	04-07-97

STANDARD TYPE	STD-DWG NUMBER	REV. NO.
PEKIN, IL	513601-232-0	D

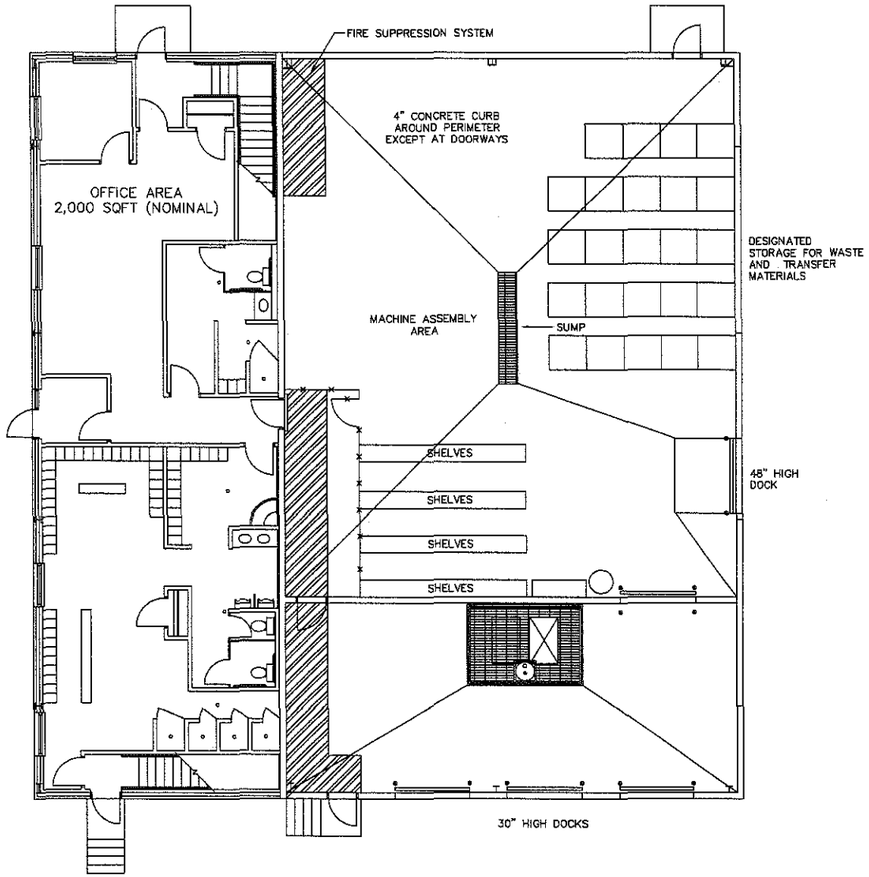

NORTH

CONTAINER STORAGE FLOOR PLAN

SCALE: 1/8" = 1'-0"

A TriHydro Corporation representative conducted an on-site field inspection to verify equipment, components, dimensions and existing conditions on April 10, 2003. Items inaccessible to visual observations were not field verified during this inspection. Revisions to these drawings (based on the inspection) were coordinated through the Safety-Kleen Engineering Department, as necessary.

TriHydro Corporation
Engineering and Environmental Consulting
920 Sheridan Street
Laramie, Wyoming 82070

LEGEND

GROUND FLOOR PALLET POSITIONS

GENERAL NOTES

1. THIS DRAWING BASED SOLELY UPON INFORMATION PROVIDED BY S-K ON 1/24/03.
2. THIS DRAWING IS PROVIDED FOR DIAGRAMATIC PURPOSES ONLY. ACTUAL STORAGE ARRANGEMENT MAY BE ALTERED.
3. SHOWN ARE 24 PALLET POSITIONS, STACKING ALLOWED AT 2 DRUMS HIGH (NON FLAMMABLE MATERIALS).

48 PALLETS x 4 DRUMS PER PALLET x 55 GAL./ DRUM EQUALS 10,560 GALLONS.

LICENSED PROFESSIONAL ENGINEER
JACK G. BEDESSEM
062-04
STATE

signature

4/28/03
date

PROPRIETARY STATEMENT

THIS DRAWING IS THE EXCLUSIVE PROPERTY OF SAFETY-KLEEN CORP. AND IS PROPRIETARY AND CONFIDENTIAL INFORMATION. THIS DRAWING AND THE INFORMATION CONTAINED THEREIN MUST NOT BE DUPLICATED, USED, DIVULGED, REPRODUCED, COPIED, DISCLOSED OR APPROPRIATED IN WHOLE OR IN PART FOR ANY PURPOSE OTHER THAN AS EXPRESSLY AUTHORIZED BY SAFETY-KLEEN CORP. THIS DRAWING MUST BE RETURNED PROMPTLY UPON REQUEST.

Project Solutions Companies
1390 Boone Industrial Drive • Suite 200 • Columbia • MO 65202
• Phone: (573) 443-7100 • Fax: (573) 443-7161 •

FIGURE D-4

TITLE
EXAMPLE CONTAINER STORAGE AREA PALLET LAYOUT

SAFETY-KLEEN CORP.
777 BIG TIMBER ROAD ELGIN, ILLINOIS 60123 PHONE 708-697-8460

NO.	DESCRIPTION	BY	CHK	APPR	DATE
A	REVISED FOR PART B	JEK	KLS	KLS	021703

REVISIONS

SCALE	BY	CHKD	P.E. APPR	OP. APPR	DATE
1/8" = 1'-0"	PROJSOL				2/12/03

SERVICE CENTER LOCATION	SC-DWG-REV NO.	SHEET NO.
PEKIN, IL	513601-705-0	A

07-15-92 10:00AM MF0670P.DWG

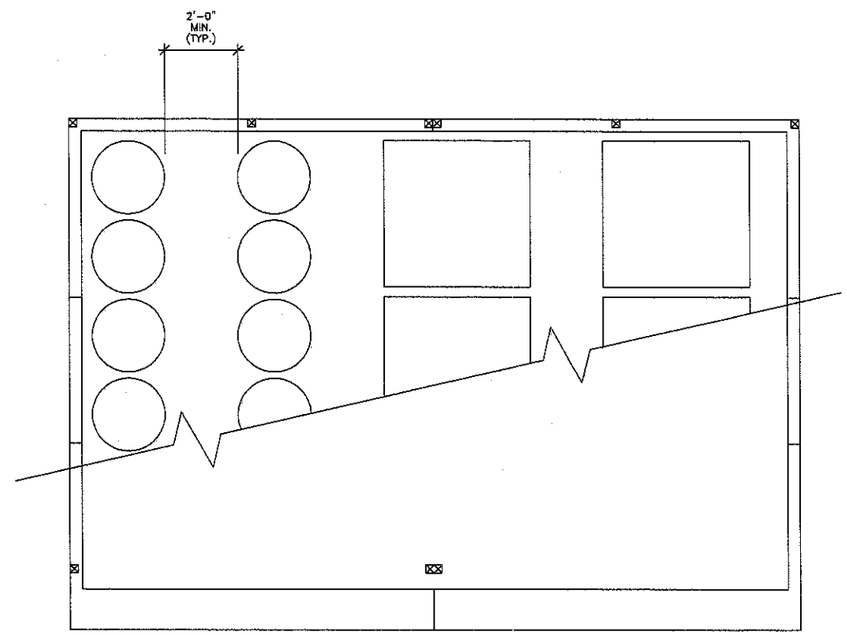

PLAN

NO SCALE

A TriHydro Corporation representative conducted an on-site field inspection to verify, equipment, components, dimensions and existing conditions on April 10, 2003. Items inaccessible to visual observations were not field verified during this inspection. Revisions to these drawings (based on the inspection) were coordinated through the Safety-Kleen Engineering Department, as necessary.

TriHydro Corporation
Engineering and Environmental Consulting
920 Sheridan Street
Laramie, Wyoming 82070

LICENSED PROFESSIONAL ENGINEER
JACK G. BEDESSEM
062-049091
STATE OF ILLINOIS

signature

date 4/28/03

GENERAL NOTES

PROPRIETARY STATEMENT

THIS DRAWING IS THE EXCLUSIVE PROPERTY OF SAFETY-KLEEN CORP. AND IS PROPRIETARY AND CONFIDENTIAL INFORMATION. THIS DRAWING AND THE INFORMATION CONTAINED THEREIN MUST NOT BE DUPLICATED, USED, DIVULGED, REPRODUCED, COPIED, DISCLOSED OR APPROPRIATED IN WHOLE OR IN PART FOR ANY PURPOSE OTHER THAN AS EXPRESSLY AUTHORIZED BY SAFETY-KLEEN CORP. THIS DRAWING MUST BE RETURNED PROMPTLY UPON REQUEST.

Project Solutions Companies
1390 Boone Industrial Drive • Suite 200 • Columbia • MO 65202
• Phone: (573) 443-7100 • Fax: (573) 443-7181 •

FIGURE D-5

TITLE
EXAMPLE FLAMMABLE STORAGE SHELTER PALLET AND DRUM LAYOUT

SAFETY-KLEEN CORP.
777 BIG TIMBER ROAD ELGIN, ILLINOIS 60123 PHONE 708-697-8460

NO.	DESCRIPTION	BY	CHK	APPR	DATE

REVISIONS

SCALE	BY	CHKD	APPROVED	OPERATIONS	DATE
AS SHOWN	CWM	GPM			3-31-93

SERVICE CENTER LOCATION	SC-DWG. NO.-REV. NO.	SHEET NO.
PEKIN, IL.	MFPB-901-0	

3-30-93 12:00PM J010.DWG 9238.11

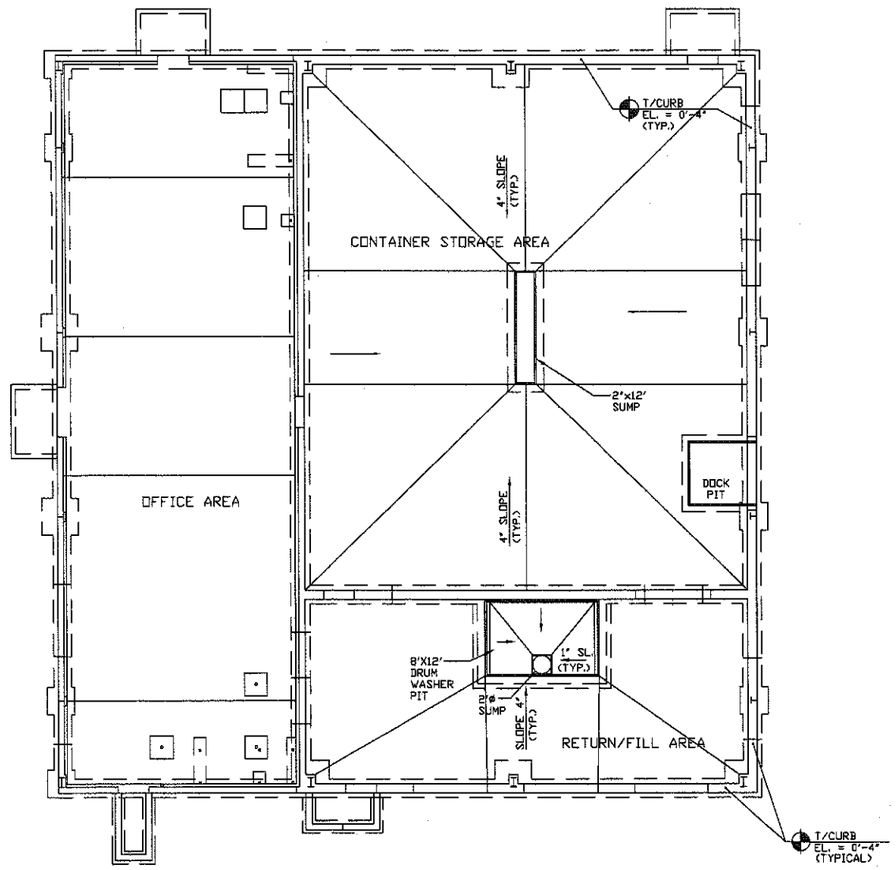

NORTH

CONTAINER STORAGE AND R/F CONTAINMENT PLAN

SCALE: 1/8" = 1'-0"

LICENSED PROFESSIONAL ENGINEER
JACK G. BEDESSEM
062-049091
STATE OF ILLINOIS

signature

4/28/03
date

A TriHydro Corporation representative conducted an on-site field inspection to verify, equipment, components, dimensions and existing conditions on April 10, 2003. Items inaccessible to visual observations were not field verified during this inspection. Revisions to these drawings (based on the inspection) were coordinated through the Safety-Kleen Engineering Department, as necessary.

TriHydro Corporation
Engineering and Environmental Consulting
920 Sheridan Street
Laramie, Wyoming 82070

GENERAL NOTES

1. THIS DRAWING BASED SOLELY UPON INFORMATION PROVIDED BY S-K ON 1/24/03.

PROPRIETARY STATEMENT

THIS DRAWING IS THE EXCLUSIVE PROPERTY OF SAFETY-KLEEN CORP. AND IS PROPRIETARY AND CONFIDENTIAL INFORMATION. THIS DRAWING AND THE INFORMATION CONTAINED THEREIN MUST NOT BE DUPLICATED, USED, DIVULGED, REPRODUCED, COPIED, DISCLOSED OR APPROPRIATED IN WHOLE OR IN PART FOR ANY PURPOSE OTHER THAN AS EXPRESSLY AUTHORIZED BY SAFETY-KLEEN CORP. THIS DRAWING MUST BE RETURNED PROMPTLY UPON REQUEST.

SECONDARY CONTAINMENT CAPACITIES

LOCATION	CONTAINMENT CAPACITY	
CONTAINER STORAGE AREA (48' x57' INSIDE)	SUMP	442 GALLONS
	SLOPED FLOOR	1,702 GALLONS
	PALLET & MISC. DISPL.	-126 GALLONS
	NET CONTAINMENT	2,018 GALLONS
RETURN/FILL AREA (20' x48' INSIDE)	PIT & SUMP	1,821 GALLONS
	SLOPED FLOOR	719 GALLONS
	DRUM & MISC. DISPL.	-777 GALLONS
	NET CONTAINMENT	1,763 GALLONS

NO.	DESCRIPTION	BY	CHK	APPR	DATE

REVISIONS

Project Solutions Companies

FIGURE D-6

1390 Boone Industrial Drive • Suite 200 • Columbia • MO 65202
• Phone: (573) 443-7100 • Fax: (573) 443-7181 •

TITLE
CONTAINER STORAGE AREA
WITH CONTAINMENT CALCULATIONS

SAFETY-KLEEN CORP.
777 BIG TIMBER ROAD ELGIN, ILLINOIS 60123 PHONE 708-697-8460

SCALE	BY	CHKD	P.E. APPR	OP. APPR	DATE
1/8" = 1'-0"	PROJSOL				2/12/03

SERVICE CENTER LOCATION	SC-DWG-REV NO.	SHEET NO.
PEKIN, IL	513601-501-0	

7-17-92 10:00am MFO WG

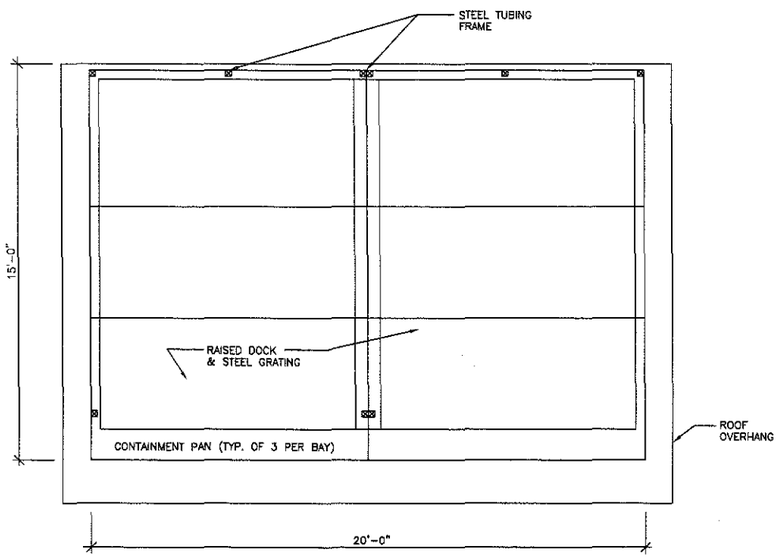

PLAN – FLAMMABLE STORAGE SHELTER
TYPICAL CONSTRUCTION
NO SCALE

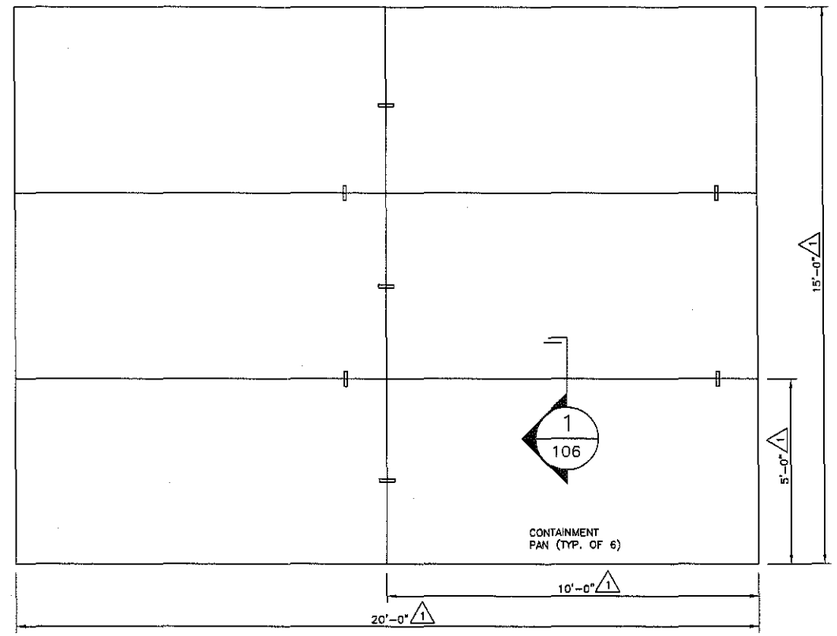

SHELTER SECONDARY CONTAINMENT PAN LAYOUT
TYPICAL CONSTRUCTION
NO SCALE

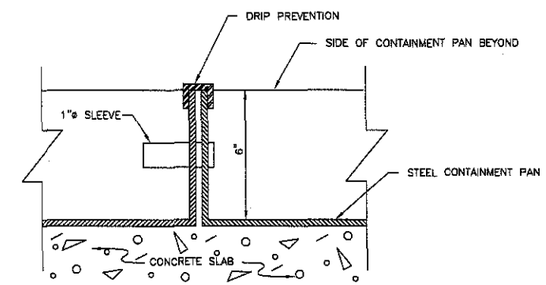

1/106 SECONDARY CONTAINMENT PAN SECTION
TYPICAL CONSTRUCTION
NO SCALE

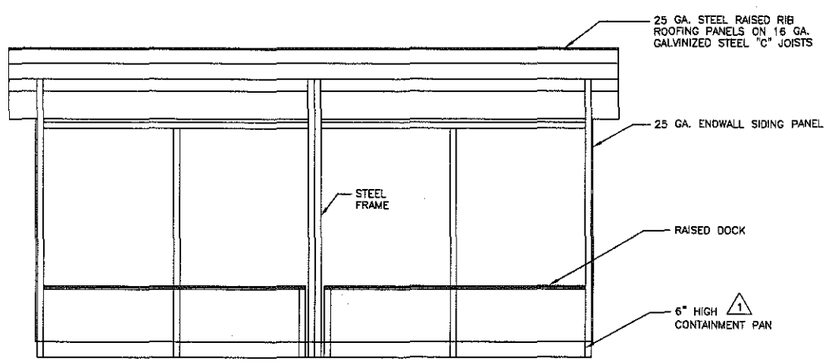

FRONT ELEVATION – FLAMMABLE STORAGE SHELTER
TYPICAL CONSTRUCTION
NO SCALE

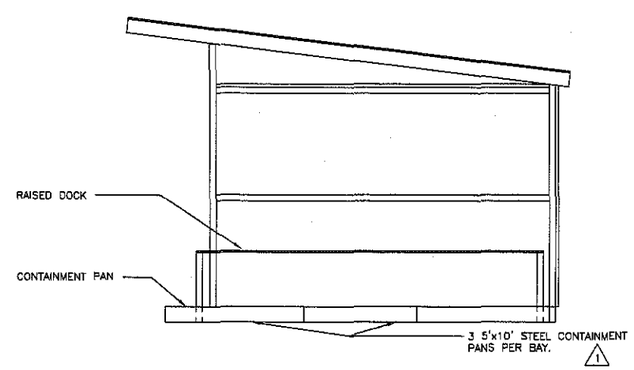

SIDE ELEVATION – FLAMMABLE STORAGE SHELTER
TYPICAL CONSTRUCTION

LICENSED PROFESSIONAL ENGINEER
JACK G. BEDESSEM
062-048091
STATE OF ILLINOIS

signature

4/28/03
date

GENERAL NOTES

1. INDICATES AS BUILT MEASUREMENT OR FIELD VERIFICATION OF EXISTING CONDITION ON 3-11-93.
2. DETAILS INDICATED AS TYPICAL CONSTRUCTION IDENTIFY TYPICAL SAFETY-KLEEN CONSTRUCTION PRACTICES WHICH WERE NOT FIELD VERIFIED UNLESS SPECIFICALLY INDICATED.

PROPRIETARY STATEMENT

THIS DRAWING IS THE EXCLUSIVE PROPERTY OF SAFETY-KLEEN CORP. AND IS PROPRIETARY AND CONFIDENTIAL INFORMATION. THIS DRAWING AND THE INFORMATION CONTAINED THEREIN MUST NOT BE DUPLICATED, USED, DIVULGED, REPRODUCED, COPIED, DISCLOSED OR APPROPRIATED IN WHOLE OR IN PART FOR ANY PURPOSE OTHER THAN AS EXPRESSLY AUTHORIZED BY SAFETY-KLEEN CORP. THIS DRAWING MUST BE RETURNED PROMPTLY UPON REQUEST.

A TriHydro Corporation representative conducted an on-site field inspection to verify, equipment, components, dimensions and existing conditions on April 10, 2003. Items inaccessible to visual observations were not field verified during this inspection. Revisions to these drawings (based on the inspection) were coordinated through the Safety-Kleen Engineering Department, as necessary.

TriHydro Corporation
Engineering and Environmental Consulting
920 Sheridan Street
Laramie, Wyoming 82070

Project Solutions Companies
1390 Boone Industrial Drive • Suite 200 • Columbia • MO 65202
• Phone: (573) 443-7100 • Fax: (573) 443-7181 •

FIGURE D-7

NO.	DESCRIPTION	BY	CHK	APPR	DATE
1	UPDATE DWG., TITLE BLOCK AND DWG. NO.	RJ	CWM		

REVISIONS

TITLE
TWO BAY FLAMMABLE STORAGE SHELTER

SAFETY-KLEEN CORP.
777 BIG TIMBER ROAD ELGIN, ILLINOIS 60123 PHONE 708-697-8460

SCALE	BY	CHKD	APPROVED	OPERATIONS	DATE
AS NOTED	R.D.	–	–	–	10-9-91

SERVICE CENTER LOCATION	SC-DWG. NO.-REV. NO.	SHEET NO.
PEKIN, IL.	MFPB-106-0	

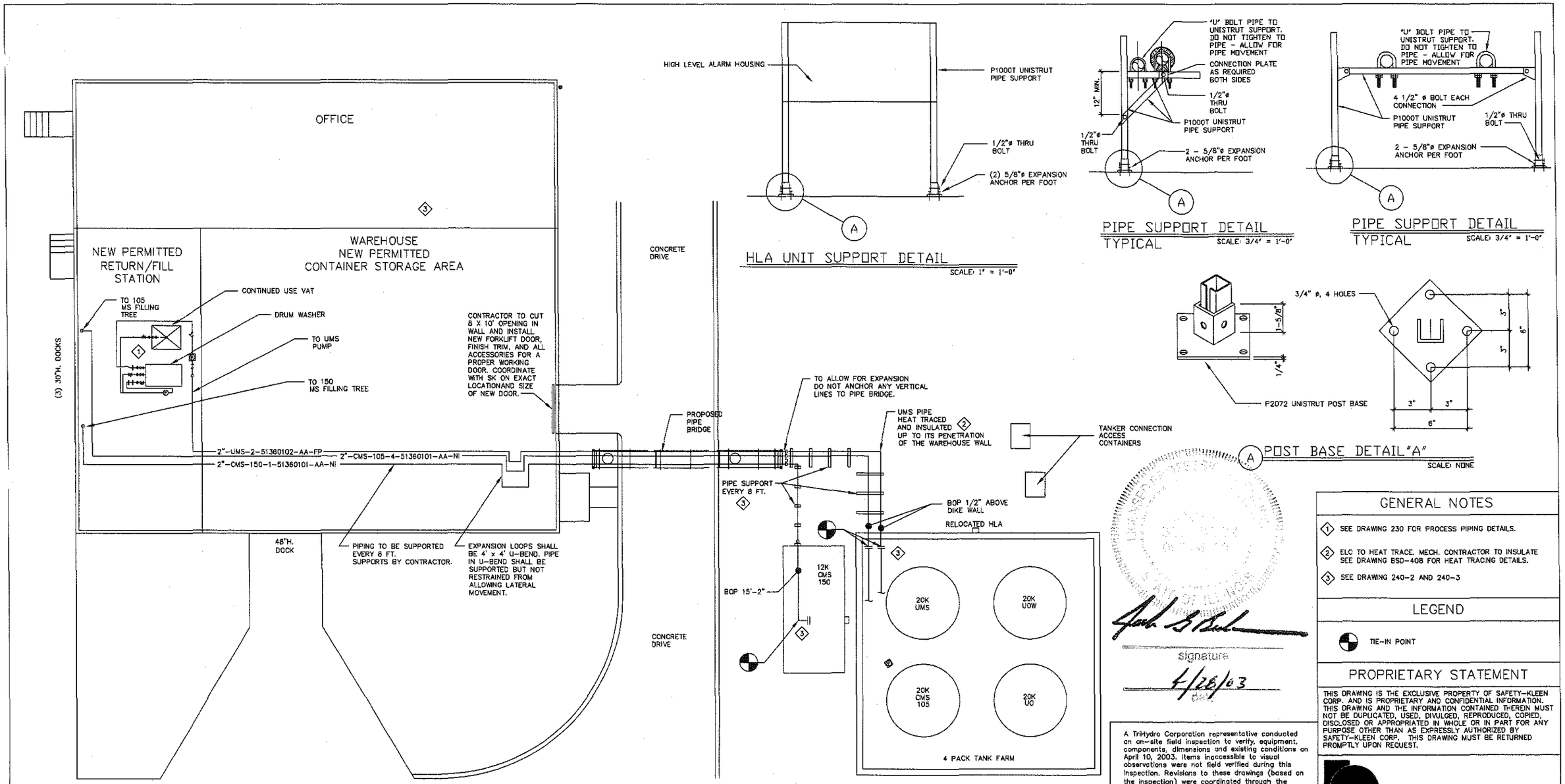

signature

4/28/03

A TriHydro Corporation representative conducted an on-site field inspection to verify, equipment, components, dimensions and existing conditions on April 10, 2003. Items inaccessible to visual observations were not field verified during this inspection. Revisions to these drawings (based on the inspection) were coordinated through the Safety-Kleen Engineering Department, as necessary.

TriHydro Corporation
Engineering and Environmental Consulting
920 Sheridan Street
Laramie, Wyoming 82070

GENERAL NOTES

1. SEE DRAWING 230 FOR PROCESS PIPING DETAILS.
2. ELC TO HEAT TRACE. MECH. CONTRACTOR TO INSULATE SEE DRAWING BSD-408 FOR HEAT TRACING DETAILS.
3. SEE DRAWING 240-2 AND 240-3

LEGEND

TIE-IN POINT

PROPRIETARY STATEMENT

THIS DRAWING IS THE EXCLUSIVE PROPERTY OF SAFETY-KLEEN CORP. AND IS PROPRIETARY AND CONFIDENTIAL INFORMATION. THIS DRAWING AND THE INFORMATION CONTAINED THEREIN MUST NOT BE DUPLICATED, USED, DIVULGED, REPRODUCED, COPIED, DISCLOSED OR APPROPRIATED IN WHOLE OR IN PART FOR ANY PURPOSE OTHER THAN AS EXPRESSLY AUTHORIZED BY SAFETY-KLEEN CORP. THIS DRAWING MUST BE RETURNED PROMPTLY UPON REQUEST.

Project Solutions Companies

FIGURE D-8

1390 Boone Industrial Drive • Suite 200 • Columbia • MO 65202
• Phone: (573) 443-7100 • Fax: (573) 443-7181 •

ABBREVIATION LEGEND

AA = 150# PRESSURE RATING, ANSI CLASS/ CARBON STEEL, A53, GRADE B
NI = NOT INSULATED (NOT HEAT TRACED)
FP = FREEZE PROTECTED (HEAT TRACED)
CMS105 = 105° CLEAN MINERAL SPIRITS (REGULAR SOLVENT)
CMS150 = 150° CLEAN MINERAL SPIRITS (PREMIUM SOLVENT)
UO = USED OIL
UMS = USED MINERAL SPIRITS

PIPE IDENTIFICATION LABEL

TANK NUMBER — DESIGNATES LINE NUMBER 01

3"-CMS150-3-20580101-AA-NI

- DESIGNATES INSULATION (SEE ABBREV. LEGEND)
- DESIGNATES PRESSURE RATING & MAT'L. (SEE ABBREV. LEG.)
- S-K BRANCH FACILITY NUMBER
- DESIGNATES SERVICE (SEE ABBREV. LEGEND)
- DESIGNATES PIPE DIAMETER

NO.	DESCRIPTION	BY	CHK	APPR	DATE

REVISIONS

TITLE: NEW RETURN/FILL TO TANK FARM PIPING PLAN

Safety-Kleen Corp.
1000 NORTH RANDALL ROAD ELGIN, ILLINOIS 60123
PHONE (708)697-8460

SCALE	BY	CHKD	APPROVED	OPERATIONS	DATE
NONE	JEK	GPM			03-06-03

SERVICE CENTER LOCATION	SC-DWG NUMBER	REV. NO.
PEKIN, IL	513601-2330	

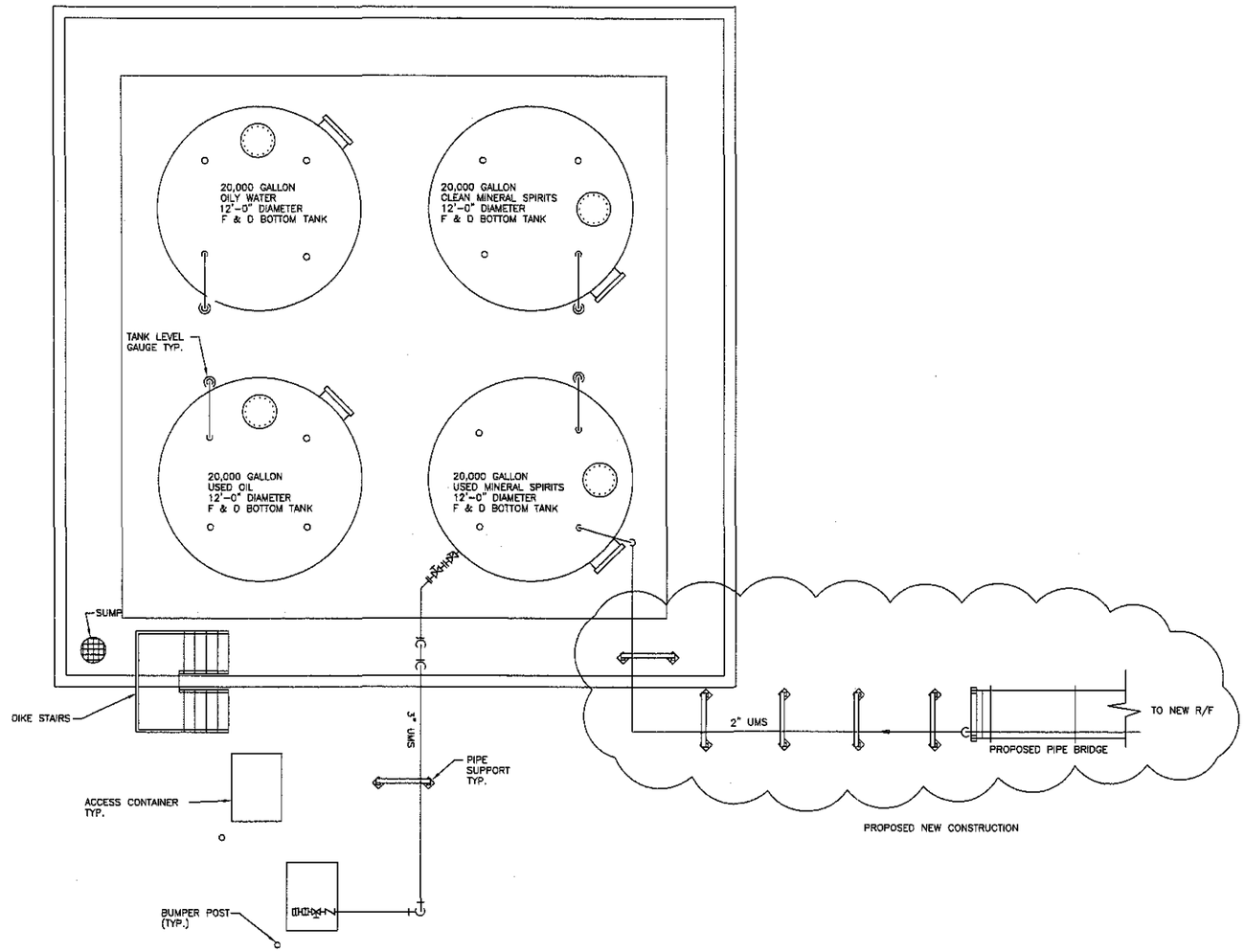

NORTH

TANKFARM PIPING PLAN

NO SCALE

A TriHydro Corporation representative conducted an on-site field inspection to verify, equipment, components, dimensions and existing conditions on April 10, 2003. Items inaccessible to visual observations were not field verified during this inspection. Revisions to these drawings (based on the inspection) were coordinated through the Safety-Kleen Engineering Department, as necessary.

TriHydro Corporation

Engineering and Environmental Consulting
920 Sheridan Street
Laramie, Wyoming 82070

LICENSED PROFESSIONAL ENGINEER
JACK G. BEDESSEM
062-049091
STATE OF ILLINOIS

signature

4/29/03
date

GENERAL NOTES

1. PIPING CONFIGURATION AS INDICATED FIELD VERIFIED 3-11-93.

PROPRIETARY STATEMENT

THIS DRAWING IS THE EXCLUSIVE PROPERTY OF SAFETY-KLEEN CORP. AND IS PROPRIETARY AND CONFIDENTIAL INFORMATION. THIS DRAWING AND THE INFORMATION CONTAINED THEREIN MUST NOT BE DUPLICATED, USED, DIVULGED, REPRODUCED, COPIED, DISCLOSED OR APPROPRIATED IN WHOLE OR IN PART FOR ANY PURPOSE OTHER THAN AS EXPRESSLY AUTHORIZED BY SAFETY-KLEEN CORP. THIS DRAWING MUST BE RETURNED PROMPTLY UPON REQUEST.

Project Solutions Companies

FIGURE D-8A

1390 Boone Industrial Drive • Suite 200 • Columbia • MO 65202
• Phone: (573) 443-7100 • Fax: (573) 443-7181 •

NO.	DESCRIPTION	BY	CHK	APPR	DATE
3	RECONFIGURE PIPING TO NEW R/F	JEK	KLS	KLS	020503
2	ADDED MS TANK/DELETED DUMPSTER	TW	TW	TW	100499
1	REMOVED CMS PIPING	CMA	GPM	–	041693

REVISIONS

TITLE
USED PARTS
WASHER SOLVENT TO
NEW RETURN AND FILL
PIPING PLAN

SAFETY-KLEEN CORP.
777 BIG TIMBER ROAD ELGIN, ILLINOIS 60123 PHONE 708-697-8460

SCALE	BY	CHKD	APPROVED	OPERATIONS	DATE
1/4"= 1'-0"	RJ	CWM			3-31-93

SERVICE CENTER LOCATION	SC-DWG. NO.-REV. NO.	SHEET NO.
PEKIN, IL	513601-240-2	3

10-10-99 8:30pm MFPB2402.DWG 9946.1

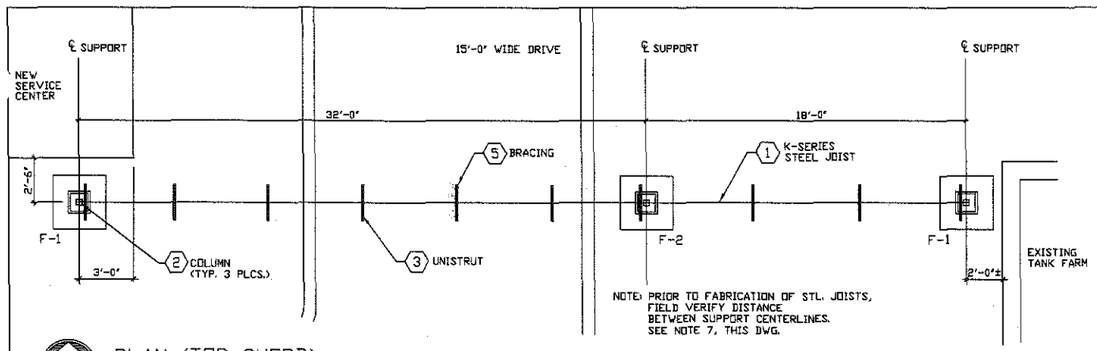

PLAN (TOP CHORD)

SCALE: 1/4" = 1'-0"

UNDER NO CIRCUMSTANCES SHALL THERE BE ANYONE STANDING ON THE JOISTS

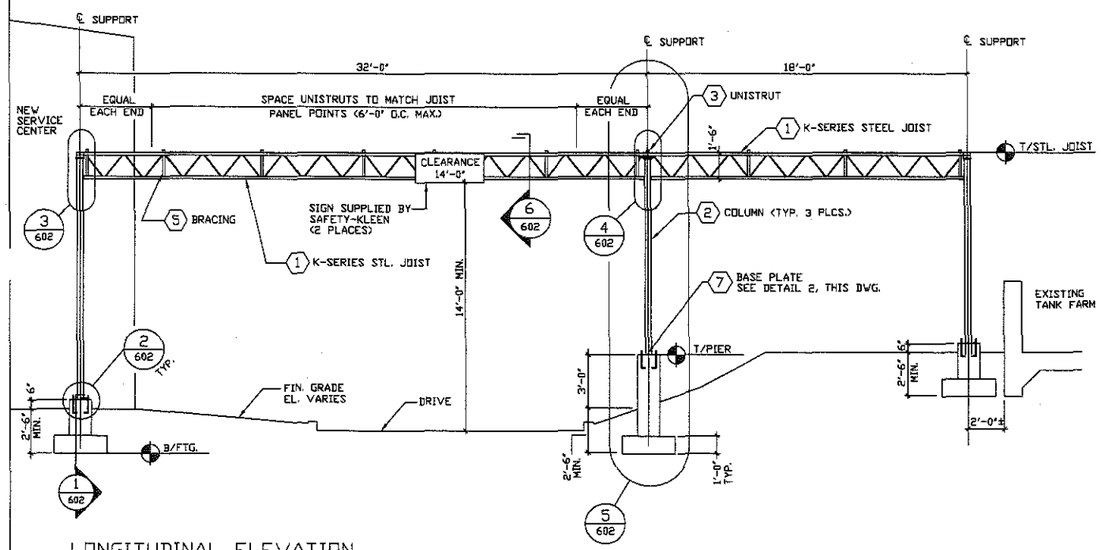

LONGITUDINAL ELEVATION

SCALE: 1/4" = 1'-0"

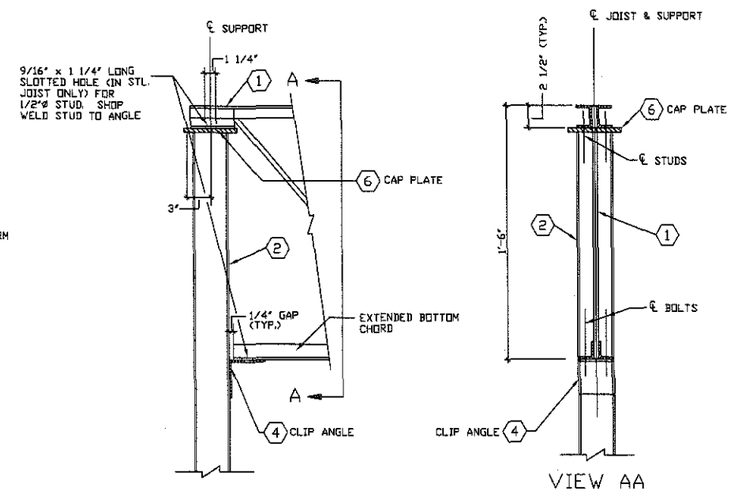

3 / 602 EXTERIOR COLUMN/JOIST CONNECTION DETAILS

NO SCALE

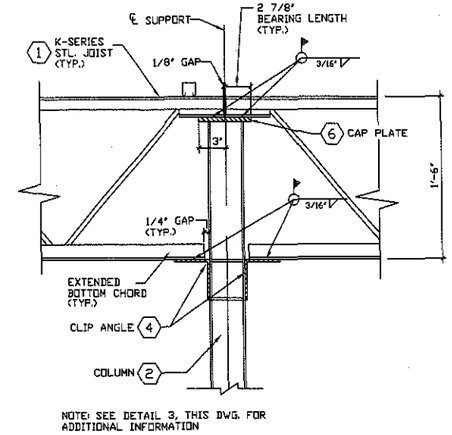

4 / 602 INTERIOR COLUMN/JOIST CONNECTION DETAIL

NO SCALE

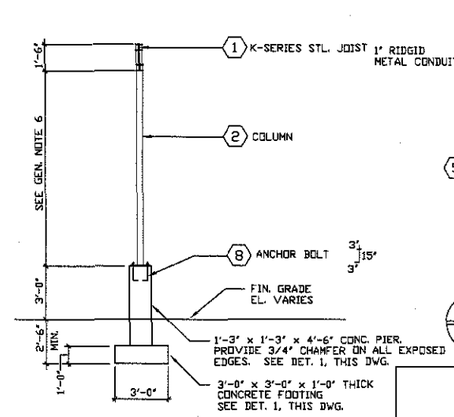

5 / 602 ELEVATION (SUPPORT COLUMN)

SCALE: 1/4" = 1'-0"

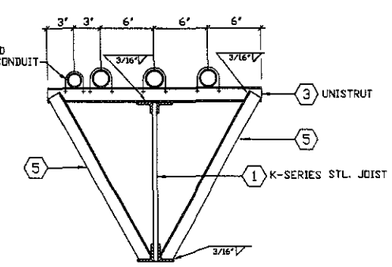

6 / 602 TYP. SECTION

SCALE: 1 1/2" = 1'-0"

GENERAL NOTES

1. DESIGN LIVE LOADS :
   GRAVITY 30 PLF
   WIND 75 MPH , EXPOSURE B
2. SHOP ASSEMBLE SUPPORT COLUMNS. USE 3/16" FILLET WELDS AT ALL CONNECTIONS UNLESS NOTED OTHERWISE.
3. SHOP PAINT ALL MEMBERS PER SPECIFICATIONS.
4. SHIM, LEVEL AND GROUT BASE PLATES WITH NON-SHRINKING GROUT AS REQUIRED.
5. T/PIER ELEVATION SET WITH RESPECT TO SITE DRAWING FINISHED GRADES. FIELD DETERMINE B/FTG. ELEVATION BASED ON 2'-6" MIN. DEPTH.
6. FIELD DETERMINE LENGTH OF COLUMNS BASED ON T/PIER ELEVATIONS AND 14'-0" MINIMUM CLEARANCE AT DRIVEWAY.
7. FIELD VERIFY HORIZONTAL DIMENSIONS SHOWN AND ADJUST STL. JOIST SPAN AS REQUIRED. NOTIFY ENGINEER OF DISCREPANCIES GREATER THAN 3 FEET.
8. JOIST MANUFACTURER SHALL DESIGN FOR BOTH VERTICAL AND HORIZONTAL LOADS (WIND AND SEISMIC) JOIST MANUFACTURER TO CONFIRM JOIST STABILITY

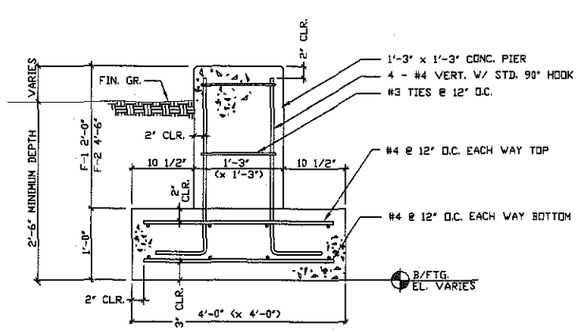

1 / 602 PIER/FTG. DETAIL

SCALE: 1" = 1'-0"

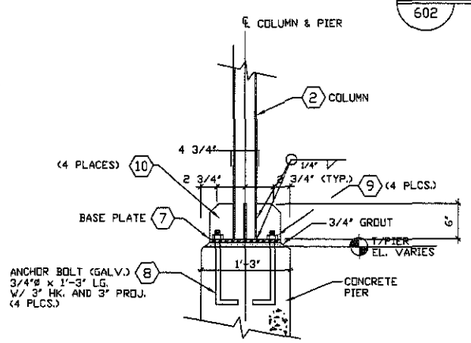

2 / 602 COL./BASE DETAIL

SCALE: 1" = 1'-0"

MATERIAL LIST

MARK	DESCRIPTION
1	18K3 STEEL JOIST
2	TS 4" x 4" x 1/4"
3	UNISTRUT 1 5/8" x 1 5/8" x 2'-0" LONG
4	∠ 4" x 4" x 1/4" CLIP ANGLE
5	∠ 1 1/2" x 1 1/2" x 1/8"
6	6" x 6" x 1/2" CAP PLATE
7	1'-0" x 1'-0" x 1/2" BASE PLATE
8	3/4" DIAMETER ANCHOR BOLT ASTM A307
9	3/4" DIAMETER NUT AND WASHER
10	4" X 6" X 1/4" STIFFENER PLATE

NO.	DESCRIPTION	BY	CHK	APPR	DATE
	REVISIONS				

PROPRIETARY STATEMENT

THIS DRAWING IS THE EXCLUSIVE PROPERTY OF SAFETY-KLEEN CORP. AND IS PROPRIETARY AND CONFIDENTIAL INFORMATION. THIS DRAWING AND THE INFORMATION CONTAINED THEREIN MUST NOT BE DUPLICATED, USED, DIVULGED, REPRODUCED, COPIED, DISCLOSED OR APPROPRIATED IN WHOLE OR IN PART FOR ANY PURPOSE OTHER THAN AS EXPRESSLY AUTHORIZED BY SAFETY-KLEEN CORP. THIS DRAWING MUST BE RETURNED PROMPTLY UPON REQUEST.

TRABUE, HANSEN & HINSHAW, INC.
CONSULTING ENGINEERS
1901 PENNSYLVANIA DR. COLUMBIA, MO 65202
Phone (573) 814-1066
Fax (573) 814-1188
Email: info@THHinc.com

Project Solutions Companies
1390 Boone Industrial Drive • Suite 200 • Columbia • MO 65202
• Phone: (573) 443-7100 • Fax: (573) 443-7181 •

FIGURE D-8B

TITLE

PIPE BRIDGE PLAN, ELEVATION, AND DETAILS (PROPOSED)

SAFETY-KLEEN CORP.
777 BIG TIMBER ROAD ELGIN, ILLINOIS 60123 PHONE 708-697-9460

SCALE	BY	CHKD	APPROVED	OPERATIONS	DATE
AS SHOWN	PROJSOL	SD			1-15-03

SERVICE CENTER LOCATION	SC-DWG. NO.-REV. NO.	SHEET NO.
PEKIN, IL	513601-602-0	

66020.DWG 9238.13
1:30pm
1-7-03

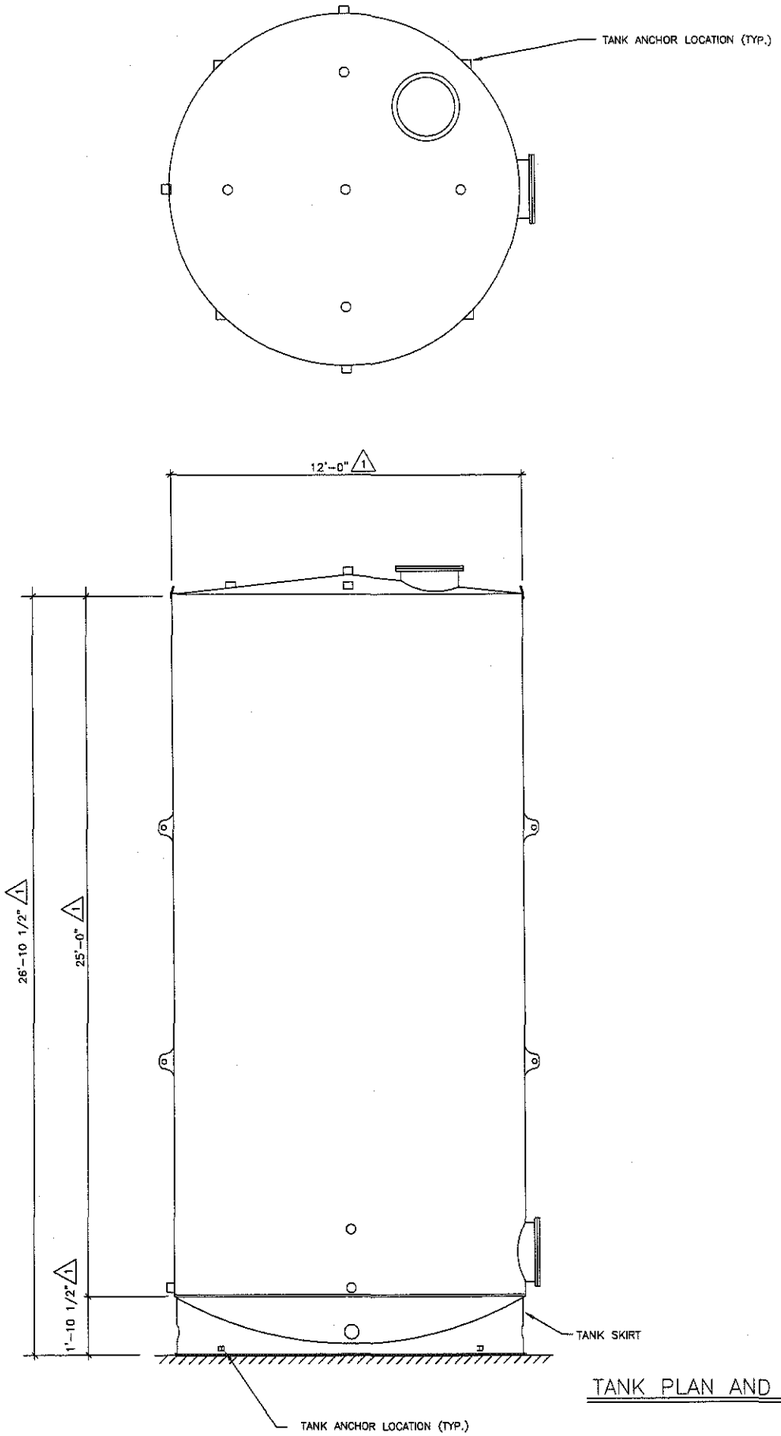

TANK PLAN AND ELEVATION

NO SCALE

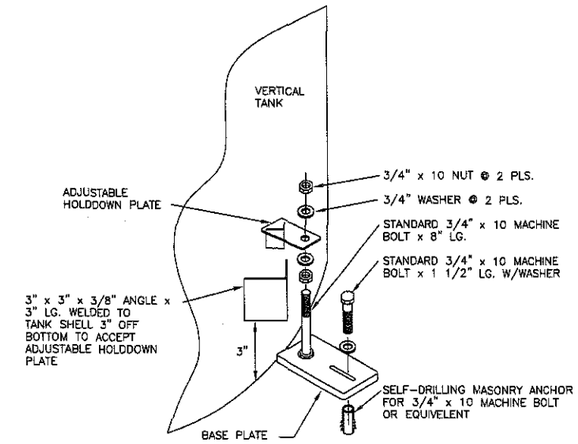

1/107 TANK ANCHORING DETAIL
TYPICAL CONSTRUCTION

SCALE: NONE

A TriHydro Corporation representative conducted an on-site field inspection to verify, equipment, components, dimensions and existing conditions on April 10, 2003. Items inaccessible to visual observations were not field verified during this inspection. Revisions to these drawings (based on the inspection) were coordinated through the Safety-Kleen Engineering Department, as necessary.

TriHydro Corporation
Engineering and Environmental Consulting
920 Sheridan Street
Laramie, Wyoming 82070

GENERAL NOTES

1. INDICATES AS BUILT MEASUREMENT OR FIELD VERIFICATION OF EXISTING CONDITION ON 3-11-93.
2. DETAILS INDICATED AS TYPICAL CONSTRUCTION IDENTIFY TYPICAL SAFETY-KLEEN CONSTRUCTION PRACTICES WHICH WERE NOT FIELD VERIFIED UNLESS SPECIFICALLY INDICATED.
3. TANK SURFACES ARE TYPICALLY PREPARED IN ACCORDANCE WITH STEEL STRUCTURE PAINTING COUNCIL CODE #SSPC-SP3-63T.
4. TANKS TYPICALLY RECIEVE ONE COAT WHITE OXIDE PAINT AND TWO COATS OF ALKYD BASE GLOSS WHITE STRUCTURAL ENAMEL.
5. SUPPORTING SKIRT TYPICALLY PROTECTED BY MATERIALS HAVING A FIRE RATING OF NOT LESS

PROPRIETARY STATEMENT

THIS DRAWING IS THE EXCLUSIVE PROPERTY OF SAFETY-KLEEN CORP. AND IS PROPRIETARY AND CONFIDENTIAL INFORMATION. THIS DRAWING AND THE INFORMATION CONTAINED THEREIN MUST NOT BE DUPLICATED, USED, DIVULGED, REPRODUCED, COPIED, DISCLOSED OR APPROPRIATED IN WHOLE OR IN PART FOR ANY PURPOSE OTHER THAN AS EXPRESSLY AUTHORIZED BY SAFETY-KLEEN CORP. THIS DRAWING MUST BE RETURNED PROMPTLY UPON REQUEST.

LICENSED PROFESSIONAL ENGINEER
JACK G. BEDESSEM
062-049091
STATE OF ILLINOIS

signature

4/28/03
date

Project Solutions Companies
1390 Boone Industrial Drive • Suite 200 • Columbia • MO 65202
• Phone: (573) 443-7100 • Fax: (573) 443-7181 •

FIGURE D-9

NO.	DESCRIPTION	BY	CHK	APPR	DATE

REVISIONS

TITLE
USED PARTS WASHER SOLVENT, 20,000 GALLON VERTICAL STORAGE TANK

SAFETY-KLEEN CORP.
777 BIG TIMBER ROAD ELGIN, ILLINOIS 60123 PHONE 708-697-8460

SCALE	BY	CHKD	APPROVED	OPERATIONS	DATE
NONE	RJ	CWM			3-31-93

SERVICE CENTER LOCATION	SC-DWG. NO.-REV. NO.	SHEET NO.
PEKIN, IL.	MFPB-107-0	

3-30-93 12:00PM t 70.DWG 9238.11

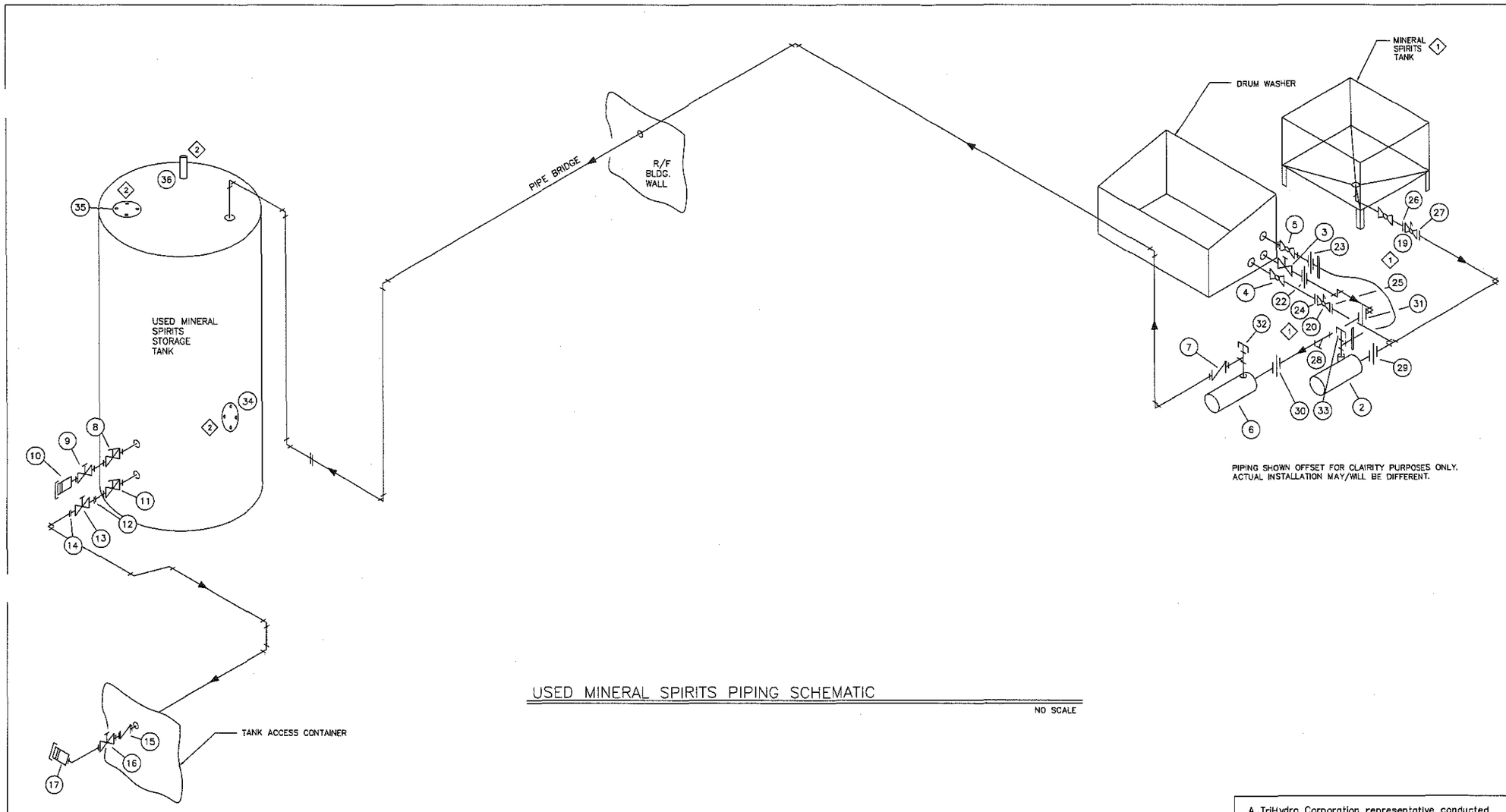

USED MINERAL SPIRITS PIPING SCHEMATIC

NO SCALE

GENERAL NOTES

1. PIPING CONFIGURATION AS INDICATED FIELD VERIFIED 11-2-99.
2. THIS DRAWING HAS BEEN BASED ON A SCHEMATIC WHICH INCLUDED REVISION 1 PROVIDED BY QUESTEC CORP.

SYMBOL LIST

	MANWAY
	CONSERVATION VENT
	CAMLOC COUPLING
	90° CAMLOC COUPLING
	GATE VALVE
	EMERGENCY VALVE
	BALL VALVE
	CHECK VALVE
	STRAINER
	PUMP
	REDUCER/INCREASER
	SCREWED UNION
	CAP
	HOSE CLAMP
	FLEXIBLE HOSE
	PIPE PENETRATION/ATTACHMENT TO EQUIPMENT
	DIRECTION OF FLOW
	FLANGED CONNECTION
	JOINT

FITTING SCHEDULE

1	1 1/2" THREADED BALL VALVE	20	1 1/2" FLANGED ELECTRIC BALL VALVE
2	USED MINERAL SPIRITS RECIRCULATION PUMP	22	2" THREADED UNION
3	2" THREADED VALVE	23	1 1/4" THREADED UNION
4	1 1/2" THREADED VALVE	24	1 1/2" FLANGED CONNECTION
5	1 1/4" THREADED VALVE	25	1 1/2" FLANGED CONNECTION
6	USED MINERAL SPIRITS PUMP	26	1 1/2" FLANGED CONNECTION
7	2" THREADED CHECK VALVE	27	1 1/2" FLANGED CONNECTION
8	3" THREADED EMERGENCY VALVE	28	2" BASKET STRAINER
9	3" THREADED VALVE	29	1 1/2" THREADED UNION
10	3" THREADED CAMLOC COUPLING	30	2" THREADED UNION
11	3" THREADED EMERGENCY VALVE	31	2" THREADED UNION
[illegible]	3" FLANGED CONNECTION	32	2" BUTTERFLY PLUG
[illegible]	3" FLANGED VALVE	33	1 1/2" BUTTERFLY PLUG
14	3" FLANGED CONNECTION	34	SIDE MANWAY
15	3" THREADED CHECK VALVE	35	TOP MANWAY
16	3" THREADED VALVE	36	CONSERVATION VENT
17	3" THREADED CAMLOC COUPLING W/CAP		
19	1 1/2" FLANGED ELECTRIC BALL VALVE		

A TriHydro Corporation representative conducted an on-site field inspection to verify equipment, components, dimensions and existing conditions on April 10, 2003. Items inaccessible to visual observations were not field verified during this inspection. Revisions to these drawings (based on the inspection) were coordinated through the Safety-Kleen Engineering Department, as necessary.

Schematic representative of existing return/fill station configuration. Piping not yet installed to new return/fill station at time of April 10, 2003 inspection.

TriHydro Corporation
Engineering and Environmental Consulting
920 Sheridan Street
Laramie, Wyoming 82070

LICENSED PROFESSIONAL ENGINEER
JACK G. BEDESSEM
062-049091
STATE OF ILLINOIS

signature

4/28/03
date

NO.	DESCRIPTION	BY	CHK	APPR	DATE
3	RECONFIGURE PIPING TO NEW R/F AREA	JEK	KLS	KLS	020503
2	ADDED MANWAYS AND CONSERVATION VENT	BW	BC	JB	091901
1	ADDED MS TANK/DELETED DUMPSTER	TW	TW	TW	110299

REVISIONS

PROPRIETARY STATEMENT

THIS DRAWING IS THE EXCLUSIVE PROPERTY OF SAFETY-KLEEN CORP. AND IS PROPRIETARY AND CONFIDENTIAL INFORMATION. THIS DRAWING AND THE INFORMATION CONTAINED THEREIN MUST NOT BE DUPLICATED, USED, DIVULGED, REPRODUCED, COPIED, DISCLOSED OR APPROPRIATED IN WHOLE OR IN PART FOR ANY PURPOSE OTHER THAN AS EXPRESSLY AUTHORIZED BY SAFETY-KLEEN CORP. THIS DRAWING MUST BE RETURNED PROMPTLY UPON REQUEST.

Project Solutions Companies
1390 Boone Industrial Drive • Suite 200 • Columbia • MO 65202
• Phone: (573) 443-7100 • Fax: (573) 443-7181 •

FIGURE D-10

TITLE
ENVIRONMENTAL
PIPING SCHEMATIC -
USED PARTS WASHER SOLVENT

SAFETY-KLEEN CORP.
777 BIG TIMBER ROAD ELGIN, ILLINOIS 60123 PHONE 708-697-8460

SCALE	BY	CHKD	APPROVED	OPERATIONS	DATE
AS SHOWN	CWM	TYJ			3-31-93

SERVICE CENTER LOCATION	SC-DWG. NO.-REV. NO.	SHEET NO.
PEKIN, IL.	513601-243-1	3

11-3-99 2:15 pm Mfpb2430.dwg 9946.1

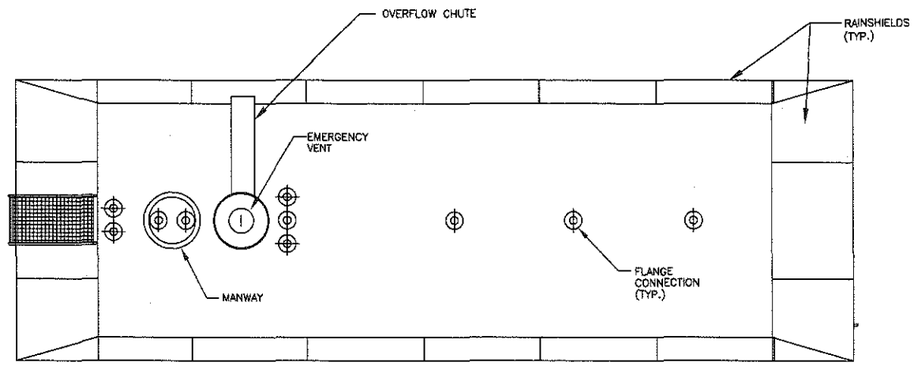

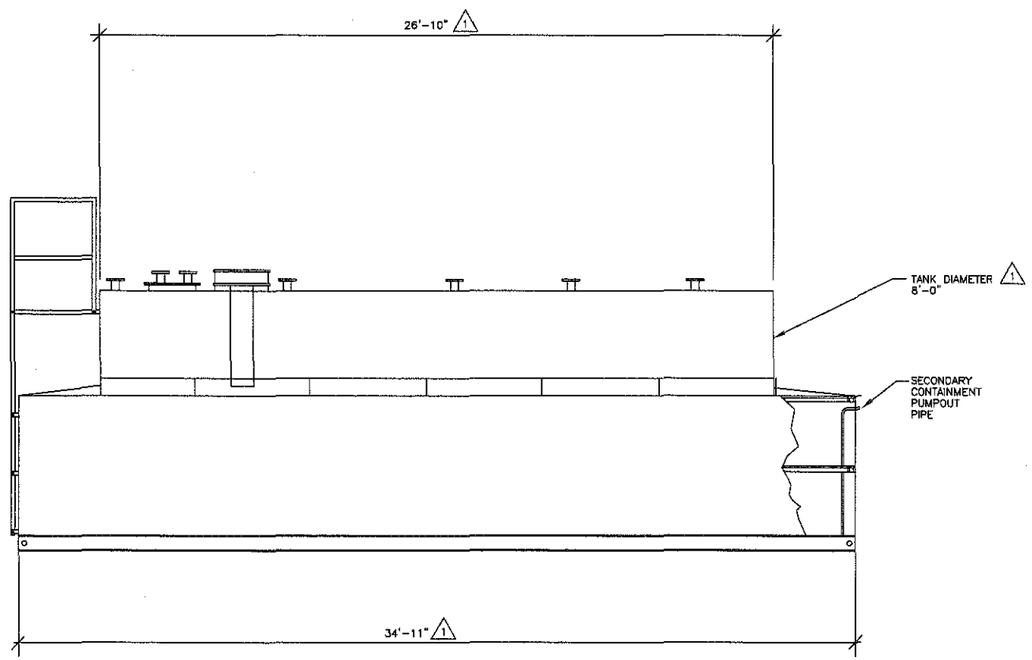

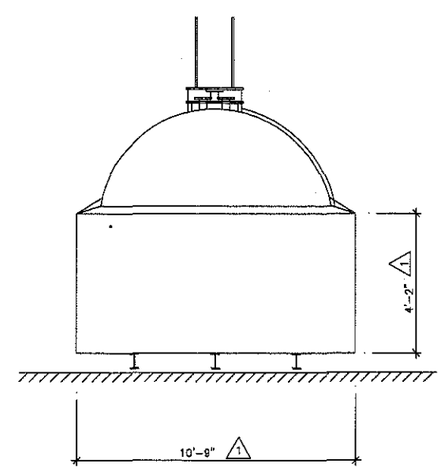

TANK PLAN AND ELEVATIONS

NO SCALE

LICENSED PROFESSIONAL ENGINEER
JACK G. BEDESSEM
062-049091
STATE OF ILLINOIS

signature

4/28/93
date

A TriHydro Corporation representative conducted an on-site field inspection to verify, equipment, components, dimensions and existing conditions on April 10, 2003. Items inaccessible to visual observations were not field verified during this inspection. Revisions to these drawings (based on the inspection) were coordinated through the Safety-Kleen Engineering Department, as necessary.

TriHydro Corporation
Engineering and Environmental Consulting
920 Sheridan Street
Laramie, Wyoming 82070

GENERAL NOTES

1. INDICATES AS BUILT MEASUREMENT OR FIELD VERIFICATION OF EXISTING CONDITION ON 3-11-93.
2. DETAILS INDICATED AS TYPICAL CONSTRUCTION IDENTIFY TYPICAL SAFETY-KLEEN CONSTRUCTION PRACTICES WHICH WERE NOT FIELD VERIFIED UNLESS SPECIFICALLY INDICATED.
3. TANK SURFACES ARE TYPICALLY PREPARED IN ACCORDANCE WITH STEEL STRUCTURE PAINTING COUNCIL CODE #SSPC-SP3-63T.
4. TANKS TYPICALLY RECIEVE ONE COAT WHITE OXIDE PAINT AND TWO COATS OF ALKYD BASE GLOSS WHITE STRUCTURAL ENAMEL.

PROPRIETARY STATEMENT

THIS DRAWING IS THE EXCLUSIVE PROPERTY OF SAFETY-KLEEN CORP. AND IS PROPRIETARY AND CONFIDENTIAL INFORMATION. THIS DRAWING AND THE INFORMATION CONTAINED THEREIN MUST NOT BE DUPLICATED, USED, DIVULGED, REPRODUCED, COPIED, DISCLOSED OR APPROPRIATED IN WHOLE OR IN PART FOR ANY PURPOSE OTHER THAN AS EXPRESSLY AUTHORIZED BY SAFETY-KLEEN CORP. THIS DRAWING MUST BE RETURNED PROMPTLY UPON REQUEST.

Project Solutions Companies
1390 Boone Industrial Drive • Suite 200 • Columbia • MO 65202
• Phone: (573) 443-7100 • Fax: (573) 443-7181 •

FIGURE D-11

NO.	DESCRIPTION	BY	CHK	APPR	DATE

REVISIONS

TITLE
USED ANTIFREEZE
10,000 GALLON HORIZONTAL
STORAGE TANK

SAFETY-KLEEN CORP.
777 BIG TIMBER ROAD ELGIN, ILLINOIS 60123 PHONE 708-697-8460

SCALE	BY	CHKD	APPROVED	OPERATIONS	DATE
AS SHOWN	RJ	CWM			3-31-93

SERVICE CENTER LOCATION	SC-DWG. NO.-REV. NO.	SHEET NO.
PEKIN, IL.	MFPB-108-0	

3-30-93 11:00A PB1080.DWG 9238.11

Modified Page: December 12, 1995

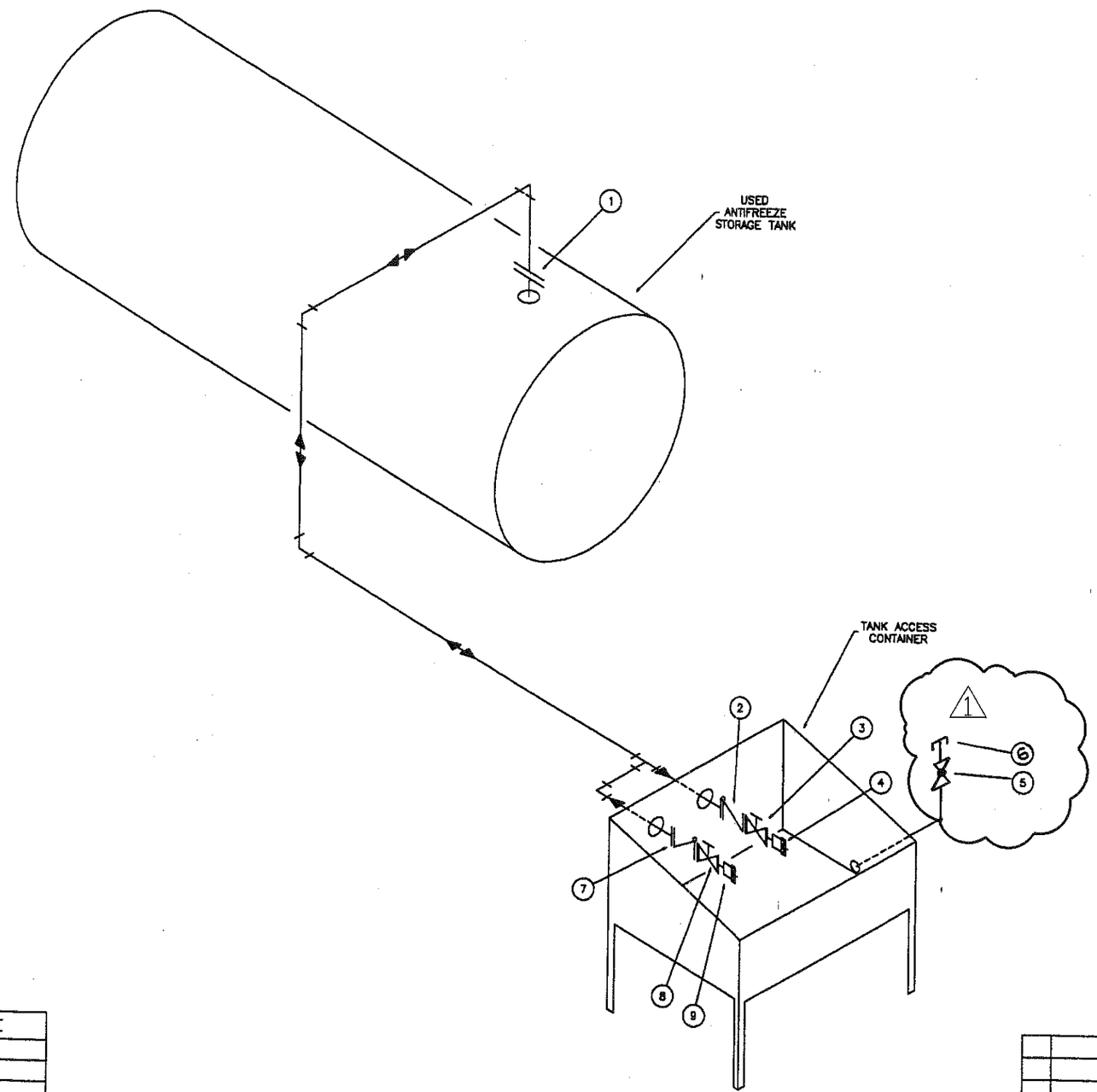

GENERAL NOTES

THIS DRAWING CONTAINS INFORMATION PROPRIETARY TO SAFETY-KLEEN CORP. ANY REPRODUCTION, DISCLOSURE OR USE OF THIS DRAWING IS EXPRESSLY PROHIBITED EXCEPT BY SAFETY-KLEEN OR AS SAFETY-KLEEN MAY AGREE IN WRITING.

PIPING CONFIGURATION AS INDICATED FIELD VERIFIED SEPTEMBER, 1995.

LICENSED PROFESSIONAL ENGINEER JACK G. BEDERSTEIN

signature

4/28/03

date

SYMBOL LIST

	PIPE CAP
	CAMLOC COUPLING
	CHECK VALVE
	BALL VALVE
	GATE VALVE (FLANGED)
	FLANGE

A TriHydro Corporation representative conducted an on-site field inspection to verify, equipment, components, dimensions and existing conditions on April 10, 2003. Items inaccessible to visual observations were not field verified during this inspection. Revisions to these drawings (based on the inspection) were coordinated through the Safety-Kleen Engineering Department, as necessary.

TriHydro Corporation

Engineering and Environmental Consulting
920 Sheridan Street
Laramie, Wyoming 82070

THOMAS H. WIMBROW 062-049899 REGISTERED PROFESSIONAL ENGINEER STATE OF ILLINOIS

Figure D-12

FITTING SCHEDULE

1	3" FLANGE
2	3" FLANGED CHECK VALVE
3	3" FLANGED VALVE
4	3" THREADED CAMLOC COUPLING
5	1 1/2" THREADED BALL VALVE
6	1 1/2" THREADED PIPE CAP
7	3" FLANGED CHECK VALVE
8	3" FLANGED VALVE
9	3" THREADED CAMLOC COUPLING

NO.	DESCRIPTION	BY	CHK	APPR	DATE
1	ORIENT DRAIN PIPING UPWARDS	DJR	JB	GM	4/03

REVISIONS

TITLE: ENVIRONMENTAL PIPING SCHEMATIC - USED ANTIFREEZE

SAFETY-KLEEN CORP.

TERA, inc.

SCALE	BY	CHKD	P.E. APPR	DP. APPR	DATE
NONE	AFM				9-27-95

SERVICE CENTER BRANCH AT: PEKIN, IL.

STD-DWG-REV NO.

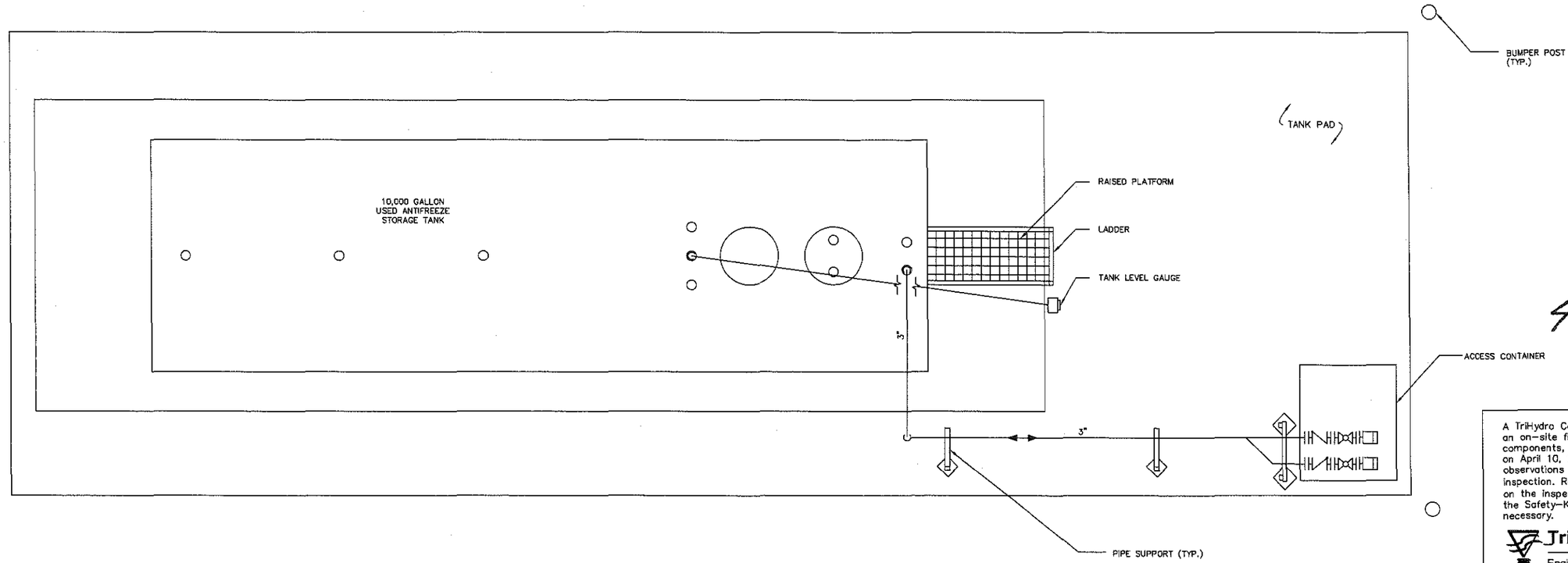

NORTH

PIPING PLAN 1

NO SCALE

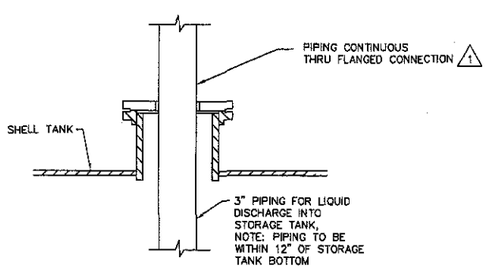

1 / 241 TANK DOME PIPING PENETRATION DETAIL
TYPICAL CONSTRUCTION

NO SCALE

LICENSED PROFESSIONAL ENGINEER
JACK G. BEDESSEM
062-049091
STATE OF ILLINOIS

signature

4/28/03
date

A TriHydro Corporation representative conducted an on-site field inspection to verify, equipment, components, dimensions and existing conditions on April 10, 2003. Items inaccessible to visual observations were not field verified during this inspection. Revisions to these drawings (based on the inspection) were coordinated through the Safety-Kleen Engineering Department, as necessary.

TriHydro Corporation
Engineering and Environmental Consulting
920 Sheridan Street
Laramie, Wyoming 82070

GENERAL NOTES

1. INDICATES AS BUILT MEASUREMENT OR FIELD VERIFICATION OF EXISTING CONDITION 3-11-93.
2. DETAILS INDICATED AS TYPICAL CONSTRUCTION IDENTIFY TYPICAL SAFETY-KLEEN CONSTRUCTION PRACTICES WHICH WERE NOT FIELD VERIFIED UNLESS SPECIFICALLY INDICATED.

PROPRIETARY STATEMENT

THIS DRAWING IS THE EXCLUSIVE PROPERTY OF SAFETY-KLEEN CORP. AND IS PROPRIETARY AND CONFIDENTIAL INFORMATION. THIS DRAWING AND THE INFORMATION CONTAINED THEREIN MUST NOT BE DUPLICATED, USED, DIVULGED, REPRODUCED, COPIED, DISCLOSED OR APPROPRIATED IN WHOLE OR IN PART FOR ANY PURPOSE OTHER THAN AS EXPRESSLY AUTHORIZED BY SAFETY-KLEEN CORP. THIS DRAWING MUST BE RETURNED PROMPTLY UPON REQUEST.

Project Solutions Companies
1390 Boone Industrial Drive • Suite 200 • Columbia • MO 65202
• Phone: (573) 443-7100 • Fax: (573) 443-7181 •

FIGURE D-13

TITLE
HORIZONTAL TANK PIPING PLAN

SAFETY-KLEEN CORP.
777 BIG TIMBER ROAD ELGIN, ILLINOIS 60123 PHONE 708-697-8460

NO.	DESCRIPTION	BY	CHK	APPR	DATE
1	ADD TANK LEVEL GAUGE & LADDER	CWM	GPM	–	040293

REVISIONS

SCALE	BY	CHKD	APPROVED	OPERATIONS	DATE
AS SHOWN	RJ	CWM			3-31-93

SERVICE CENTER LOCATION: PEKIN, IL.
SC-DWG. NO.-REV. NO.: MFPB-241-0
SHEET NO.

32410.DWG 9238.11
3-30-93 12:00pm

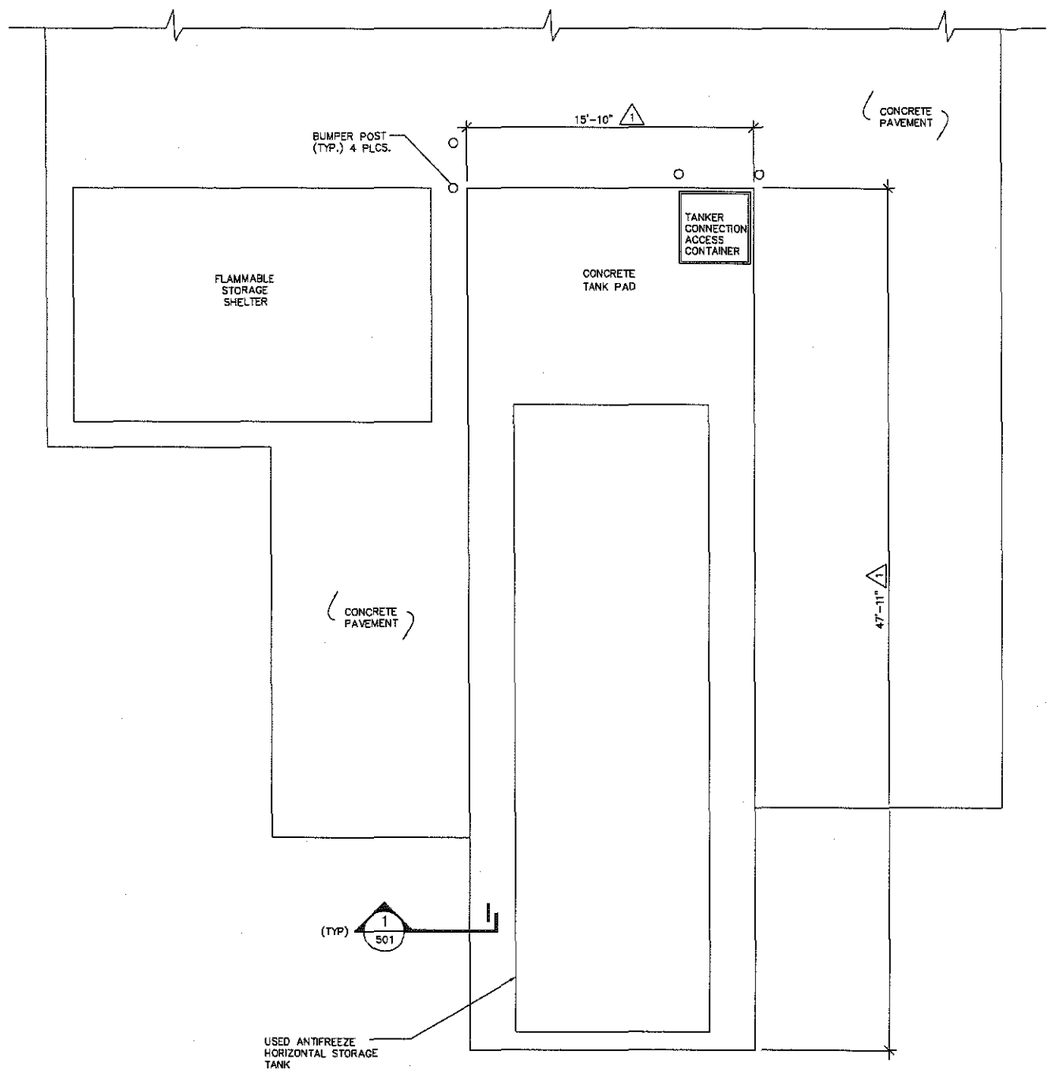

PARTIAL SITE PLAN

NORTH

0 2 4 8 12

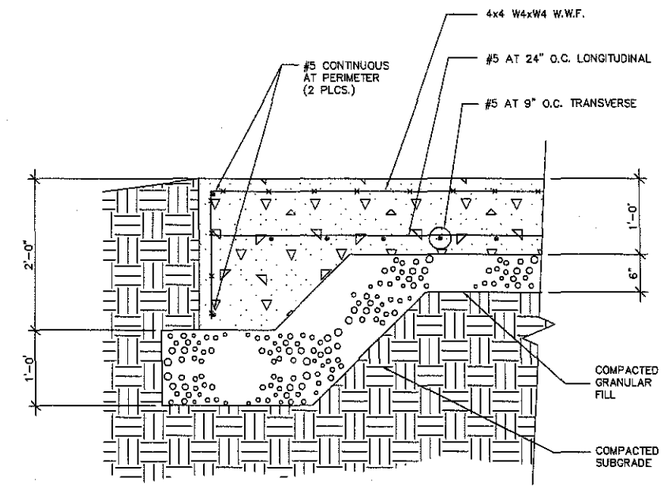

1 / 501 TANK PAD SECTION
TYPICAL CONSTRUCTION

NO SCALE

LICENSED PROFESSIONAL ENGINEER
JACK G. BEDESSEM
062-049091
STATE OF ILLINOIS

signature

4/28/03
date

A TriHydro Corporation representative conducted an on-site field inspection to verify, equipment, components, dimensions and existing conditions on April 10, 2003. Items inaccessible to visual observations were not field verified during this inspection. Revisions to these drawings (based on the inspection) were coordinated through the Safety-Kleen Engineering Department, as necessary.

TriHydro Corporation
Engineering and Environmental Consulting
920 Sheridan Street
Laramie, Wyoming 82070

GENERAL NOTES

1. INDICATES AS BUILT MEASUREMENT OR FIELD VERIFICATION OF EXISTING CONDITION ON 3-11-93.
2. DETAILS INDICATED AS TYPICAL CONSTRUCTION IDENTIFY TYPICAL SAFETY-KLEEN CONSTRUCTION PRACTICES WHICH WERE NOT FIELD VERIFIED UNLESS SPECIFICALLY INDICATED.

PROPRIETARY STATEMENT

THIS DRAWING IS THE EXCLUSIVE PROPERTY OF SAFETY-KLEEN CORP. AND IS PROPRIETARY AND CONFIDENTIAL INFORMATION. THIS DRAWING AND THE INFORMATION CONTAINED THEREIN MUST NOT BE DUPLICATED, USED, DIVULGED, REPRODUCED, COPIED, DISCLOSED OR APPROPRIATED IN WHOLE OR IN PART FOR ANY PURPOSE OTHER THAN AS EXPRESSLY AUTHORIZED BY SAFETY-KLEEN CORP. THIS DRAWING MUST BE RETURNED PROMPTLY UPON REQUEST.

Project Solutions Companies

FIGURE D-14

1390 Boone Industrial Drive • Suite 200 • Columbia • MO 65202
• Phone: (573) 443-7100 • Fax: (573) 443-7181 •

NO.	DESCRIPTION	BY	CHK	APPR	DATE

REVISIONS

TITLE
USED ANTIFREEZE HORIZONTAL TANK CONCRETE PLAN AND DETAILS

SAFETY-KLEEN CORP.
777 BIG TIMBER ROAD ELGIN, ILLINOIS 60123 PHONE 708-697-8460

SCALE	BY	CHKD	APPROVED	OPERATIONS	DATE
AS SHOWN	RJ	CWM			3-31-93

SERVICE CENTER LOCATION	SC-DWG. NO.-REV. NO.	SHEET NO.
PEKIN, IL.	MFPB-501-0	

3-30-93 12:00pm MFPM5010.DWG 9238.11

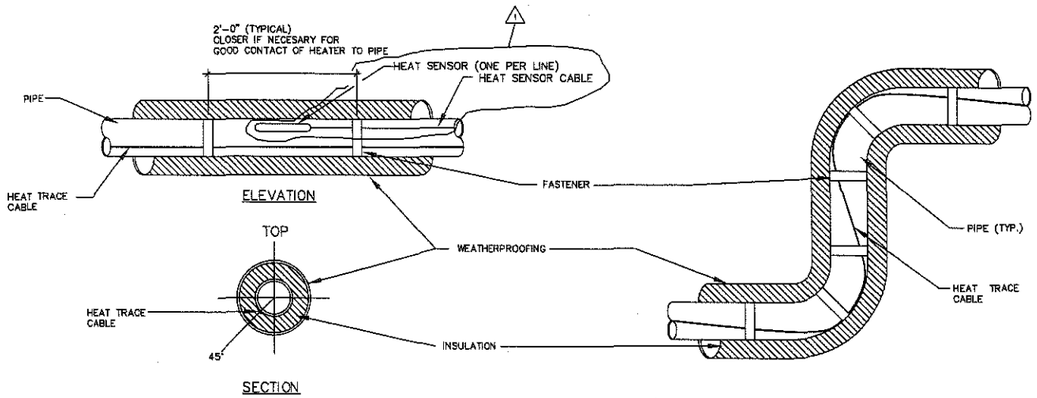

PIPE RUN
SCALE: NONE

PIPE ELBOW
SCALE: NONE

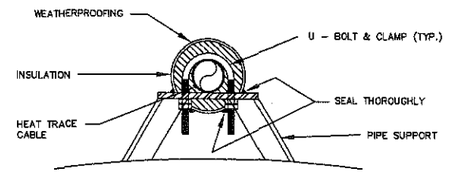

TANK SIDE - PIPE SUPPORT DETAIL
SCALE: NONE

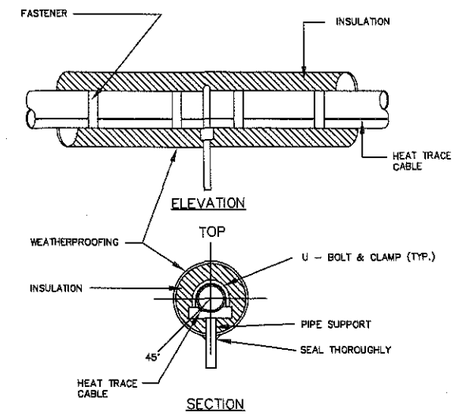

PIPE SUPPORT TYPE "A"
SCALE: NONE

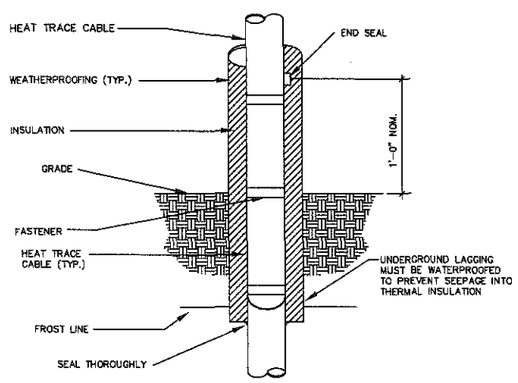

GRADE PENETRATION
SCALE: NONE

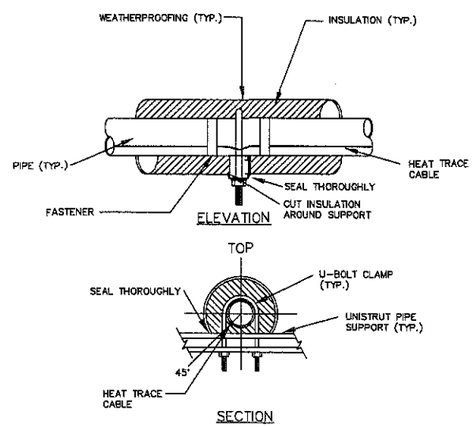

CONCRETE MOUNTED PIPE SUPPORT DETAIL
SCALE: NONE

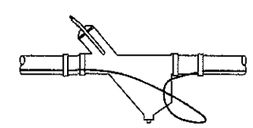

INLINE STRAINER ⚠
SCALE: NONE

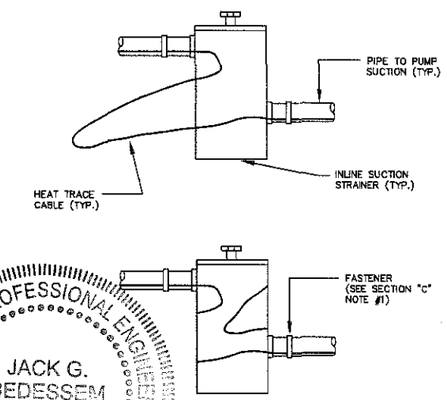

BASKET STRAINER DETAIL
(INSULATION NOT SHOWN FOR CLARITY) SCALE: NONE

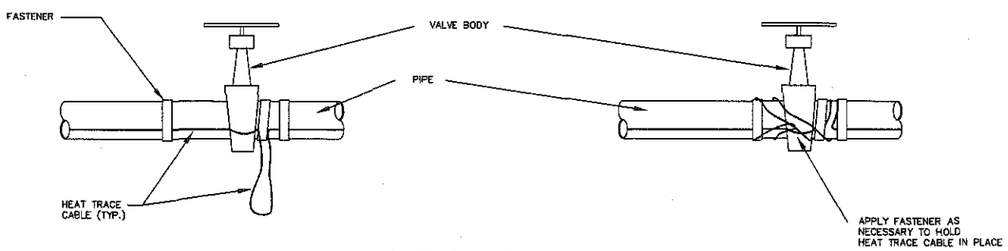

GATE VALVE
(INSULATION NOT SHOWN FOR CLARITY)
SCALE: NONE

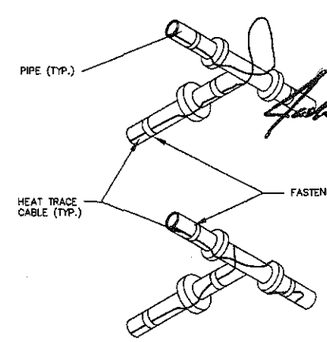

PIPE TEE ⚠
SCALE: NONE

LICENSED PROFESSIONAL ENGINEER
JACK G. BEDESSEM
062-049091
STATE OF ILLINOIS

signature
4/28/03
date

A TriHydro Corporation representative conducted an on-site field inspection to verify, equipment, components, dimensions and existing conditions on April 10, 2003. Items inaccessible to visual observations were not field verified during this inspection. Revisions to these drawings (based on the inspection) were coordinated through the Safety-Kleen Engineering Department, as necessary.

TriHydro Corporation
Engineering and Environmental Consulting
920 Sheridan Street
Laramie, Wyoming 82070

GENERAL NOTES

⚠ INSULATION NOT SHOWN FOR CLARITY.

2. ELC SEE DWG. 2330 FOR PIPING TO BE HEAT TRACED.

PROPRIETARY STATEMENT

THIS DRAWING IS THE EXCLUSIVE PROPERTY OF SAFETY-KLEEN CORP. AND IS PROPRIETARY AND CONFIDENTIAL INFORMATION. THIS DRAWING AND THE INFORMATION CONTAINED THEREIN MUST NOT BE DUPLICATED, USED, DIVULGED, REPRODUCED, COPIED, DISCLOSED OR APPROPRIATED IN WHOLE OR IN PART FOR ANY PURPOSE OTHER THAN AS EXPRESSLY AUTHORIZED BY SAFETY-KLEEN CORP. THIS DRAWING MUST BE RETURNED PROMPTLY UPON REQUEST.

Project Solutions Companies
1390 Boone Industrial Drive • Suite 200 • Columbia • MO 65202
• Phone: (573) 443-7100 • Fax: (573) 443-7181 •

FIGURE D-15

NO.	DESCRIPTION	BY	CHK	APPR	DATE
02	REVISED FOR PEKIN	JRK	GPM	GPM	030603
01	ADDED HEAT SENSOR TO PIPE RUN DETAIL	RDK	KJM		090795
0	MADE FROM DRAWING 409101-4512.	RD	KJM		110193

REVISIONS

TITLE
PIPE HEAT TRACING DETAILS

Safety-Kleen Corp.
1000 NORTH RANDALL ROAD ELGIN, ILLINOIS 60123
PHONE (708)697-8460

SCALE	BY	CHKD	APPROVED	OPERATIONS	DATE
NONE	PROJSOL	GPM			11/1/93

SERVICE CENTER STANDARDS	STD-DWG NUMBER	REV. NO.
PEKIN, IL.	BSD-408	02

PROCESS PUMP SCHEDULE

MARK	MANUFACTURER & MODEL NO.	CAPACITY GPM	TDH FT	$NPSH_A$ FT	SP.GR.	MOTOR HP	SPEED RPM	PROCESS FLUID	FLUID TEMP	REMARKS
P 3	MARLOW PUMP SK #5330	30 @ 35psi 60 @ 25psi	–	–	–	1.5	3450	USED SOLVENT	AMBIENT	IN-LINE PUMP, FURNISH WITH EXPLOSION-PROOF MOTOR △8
RP 1	MARLOW PUMP SK #4341	13.1	–	–	–	1.5	3450	USED SOLVENT	AMBIENT	IN-LINE PUMP, FURNISH WITH EXPLOSION-PROOF MOTOR △9

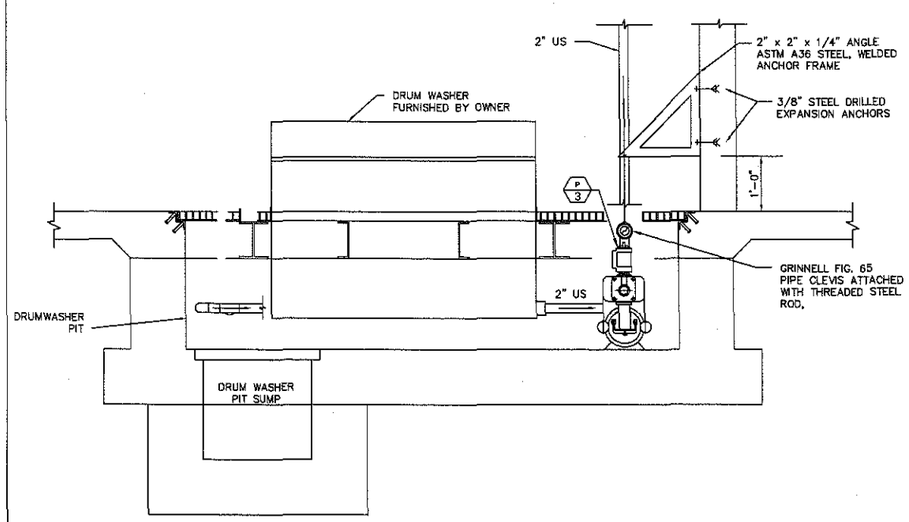

1/230 SECTION – DRUM WASHER PIT

SCALE: 3/4" = 1'-0"

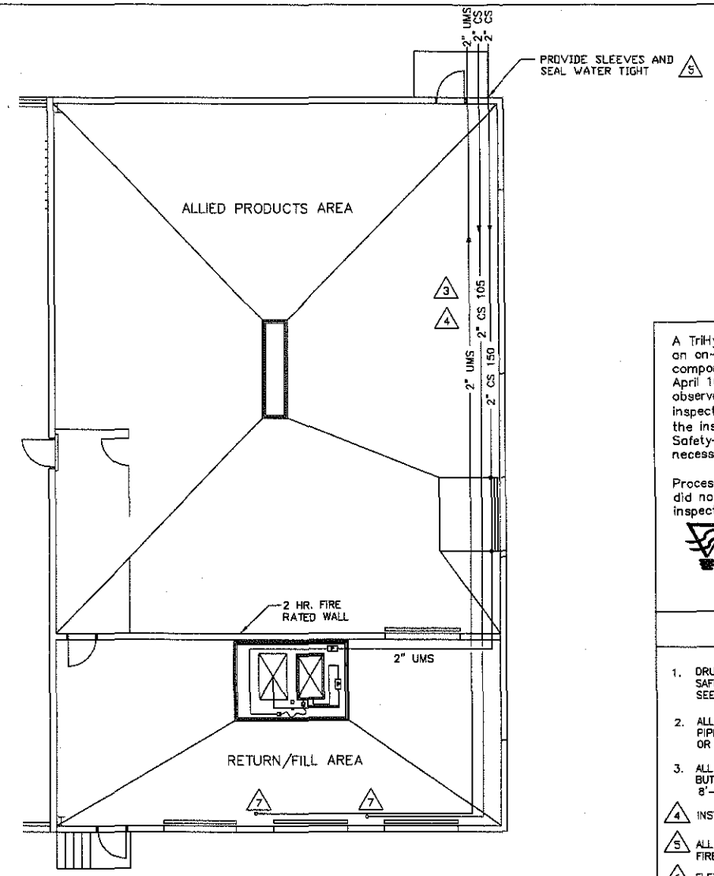

NORTH PROCESS PIPING PLAN

SCALE: 1/8" = 1'-0"

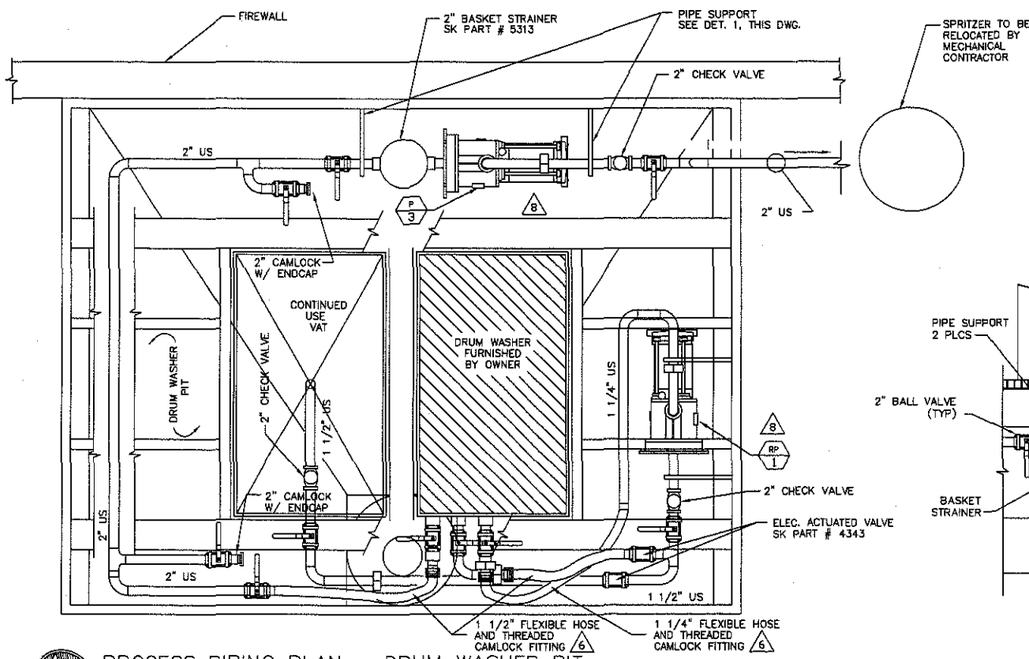

NORTH PROCESS PIPING PLAN – DRUM WASHER PIT

TYPICAL EACH RTN/FILL BAY – SEE ALSO DWG. 232

SCALE: 3/4" = 1'-0"

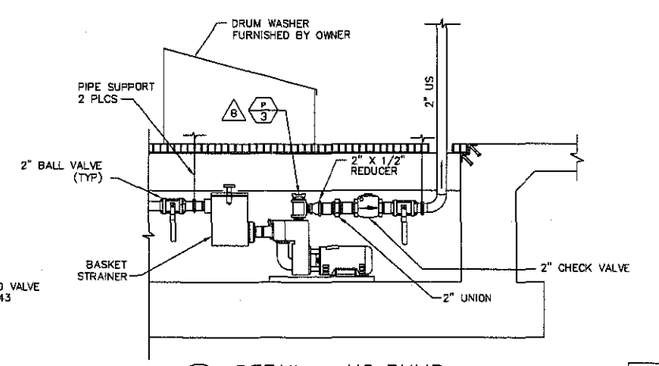

2/230 DETAIL – US PUMP

SCALE: 3/4" = 1'-0"

LICENSED PROFESSIONAL ENGINEER JACK G. BEDESSEE 062-04 STATE

signature

4/28/03

date

A TriHydro Corporation representative conducted an on-site field inspection to verify equipment, components, dimensions and existing conditions on April 10, 2003. Items inaccessible to visual observations were not field verified during this inspection. Revisions to these drawings (based on the inspection) were coordinated through the Safety-Kleen Engineering Department, as necessary.

Process piping within this proposed return/fill area did not yet exist at time of April 10, 2003 inspection.

TriHydro Corporation

Engineering and Environmental Consulting
920 Sheridan Street
Laramie, Wyoming 82070

GENERAL NOTES

1. DRUM WASHER (TYP. OF 2) SUPPLIED BY SAFETY-KLEEN AND INSTALLED BY CONTRACTOR. SEE DETAIL, DWG. 232.
2. ALL CHANGES IN DIRECTION OF PROCESS PIPING SHALL BE MADE WITH 2-45° ELBOWS OR LONG RADIUS 90'S.
3. ALL PIPING TO BE ASTM A53B, STD. WT., WITH BUTTWELDED JOINTS AND SUPPORTED EVERY 8'-0", MAXIMUM.

△4 INSTALL PIPING AS HIGH AS POSSIBLE

△5 ALL PENETRATIONS THROUGH FIRE WALLS TO BE FIREPROOFED PER CURRENT U.L. LISTING.

△6 FLEXIBLE HOSE AND CAMLOCK FITTING BY CONTRACTOR SEE DWG. 232 FOR CONTINUATION.

△7 DOWN TO NOZZLE ASSEMBLY– SEE DRAWING 231. CONFIRM WITH ELECTRICIAN THAT ALL DEVICES ON WEST WALL COMPLY WITH CLASS 1 DIV. 1 INSTALLATION PROIR TO LOCATING NOZZLE ASSEMBLIES. REFER TO DWG. 407-1.

△8 RELOCATED DEVICES: CONFIRM PROPER OPERATION OF ALL RELOCATED, REUSED DEVICES.

PROPRIETARY STATEMENT

THIS DRAWING IS THE EXCLUSIVE PROPERTY OF SAFETY-KLEEN CORP. AND IS PROPRIETARY AND CONFIDENTIAL INFORMATION. THIS DRAWING AND THE INFORMATION CONTAINED THEREIN MUST NOT BE DUPLICATED, USED, DIVULGED, REPRODUCED, COPIED, DISCLOSED OR APPROPRIATED IN WHOLE OR IN PART FOR ANY PURPOSE OTHER THAN AS EXPRESSLY AUTHORIZED BY SAFETY-KLEEN CORP. THIS DRAWING MUST BE RETURNED PROMPTLY UPON REQUEST.

Project Solutions Companies

1390 Boone Industrial Drive • Suite 200 • Columbia • MO 65202 • Phone: (573) 443-7100 • Fax: (573) 443-7181 •

FIGURE D-16

TITLE: RETURN/FILL AND WAREHOUSE AREA PROCESS PIPING PLAN

SAFETY-KLEEN CORP.
777 BIG TIMBER ROAD ELGIN, ILLINOIS 60123 PHONE 708-697-8460

NO.	DESCRIPTION	BY	CHK	APPR	DATE

REVISIONS

SCALE	BY	CHKD	APPROVED	OPERATIONS	DATE
AS SHOWN	PROJSOL	GPM			12-10-93

SERVICE CENTER LOCATION	SC-DWG. NO.-REV. NO.	SHEET NO.
PEKIN, IL	513601-230-0	

12-9-93 12:55 pm J00 .DWG 9273.13b

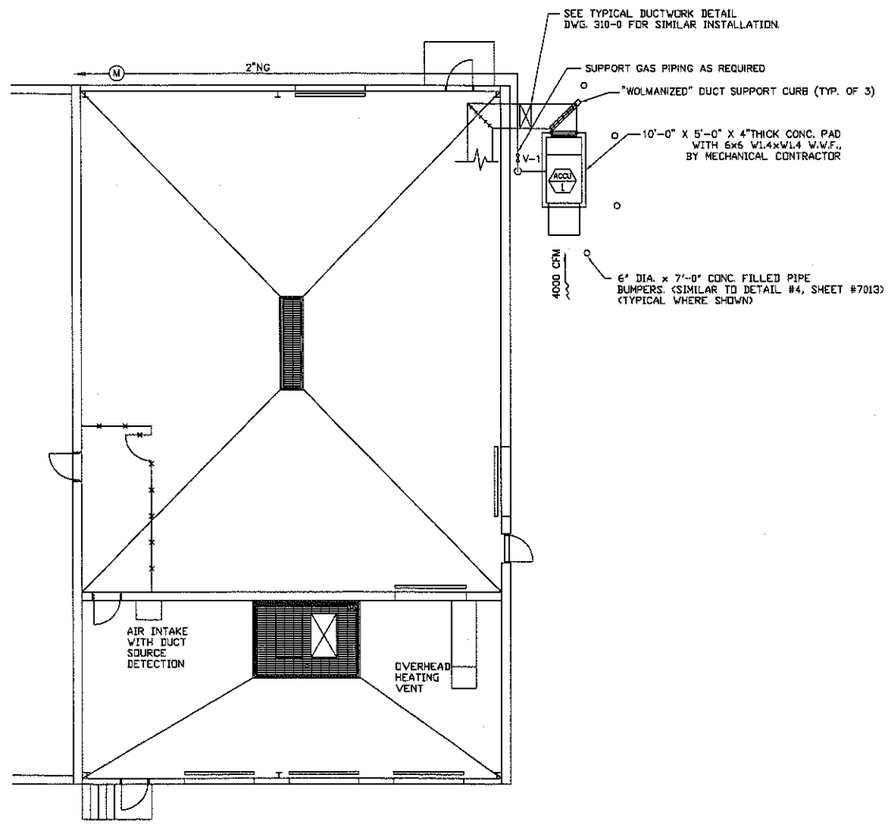

NORTH

HVAC RELOCATION PLAN

SCALE: 1/8" = 1'-0"

A TriHydro Corporation representative conducted an on-site field inspection to verify, equipment, components, dimensions and existing conditions on April 10, 2003. Items inaccessible to visual observations were not field verified during this inspection. Revisions to these drawings (based on the inspection) were coordinated through the Safety-Kleen Engineering Department, as necessary.

TriHydro Corporation

Engineering and Environmental Consulting
920 Sheridan Street
Laramie, Wyoming 82070

LICENSED PROFESSIONAL ENGINEER
JACK G.
BEDESSEM
062-049091
STATE OF ILLINOIS

signature

4/28/03
date

GENERAL NOTES

THIS DRAWING CONTAINS INFORMATION PROPRIETARY TO SAFETY-KLEEN CORPORATION. ANY REPRODUCTION, DISCLOSURE OR USE OF THIS DRAWING IS EXPRESSLY PROHIBITED EXCEPT BY SAFETY-KLEEN OR AS SAFETY-KLEEN MAY AGREE IN WRITING.

1. INSTALL SUPPLY DUCTWORK AS CLOSE TO ROOF STRUCTURAL STEEL AS POSSIBLE.
2. SEE DWG. 325 FOR EQUIPMENT AND DIFFUSER SCHEDULES.
3. SEE DWG. 310 FOR DUCTWORK AND ROOF CURB DETAILS.
4. INTERLOCK EXHAUST FANS(EF-6 AND EF-7) WITH FURNACE FAN (F-1). ALL UNITS TO RUN CONTINUOUSLY. FAILURE OR TRIP OF ANY FAN SHALL TRIP THE OTHER TWO FANS.

Project Solutions Companies

1390 Boone Industrial Drive • Suite 200 • Columbia • MO 65202
• Phone: (573) 443-7100 • Fax: (573) 443-7181 •

FIGURE D-17

TITLE
RETURN/FILL AND WAREHOUSE AREA EXHAUST FAN AND DUCTWORK PLAN

SAFETY-KLEEN CORP.
777 BIG TIMBER ROAD ELGIN, ILLINOIS 60123 PHONE 708-697-8460

NO.	DESCRIPTION	BY	CHK	APPR	DATE
1	MOVE OUTSIDE HEAT UNIT TO FACILITATE NEW FORKLIFT DOOR	JEK	KLS	KLS	013103

REVISIONS

SCALE	BY	CHKD	P.E. APPR	OP. APPR	DATE
1/8" = 1'-0"	PROJSOL				01-20-03

SERVICE CENTER LOCATION	SC-DWG-REV NO.	SHEET NO.
PEKIN, IL	513601-302-0	1

7-15-92 1:00pm MF083020.DWG

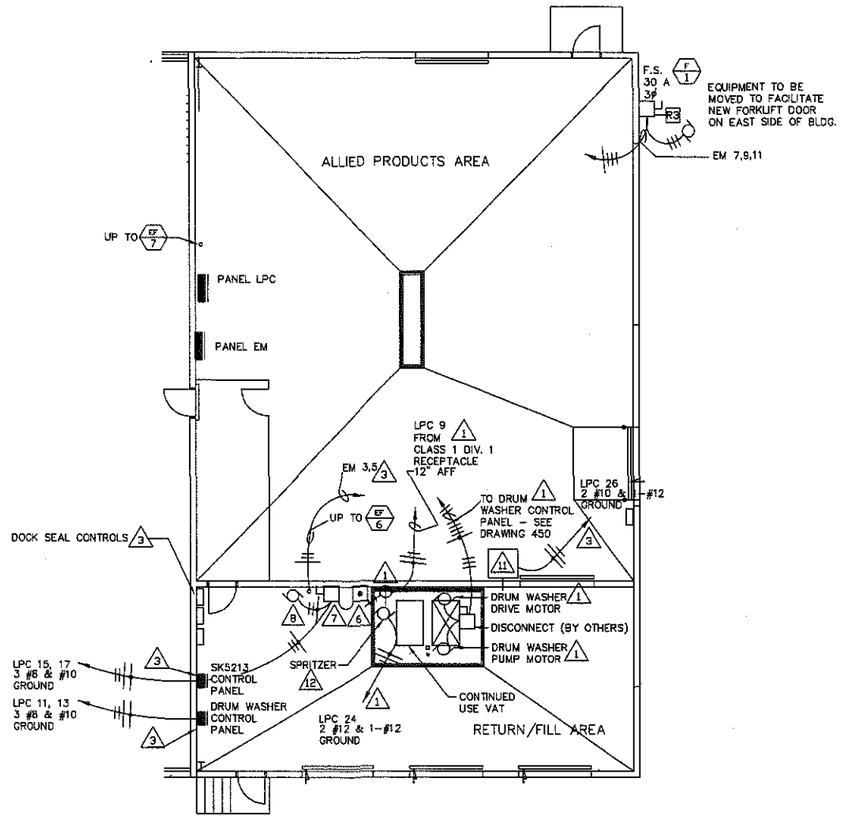

NORTH

RETURN/FILL AND WAREHOUSE AREA POWER PLAN

SCALE: 1/8" = 1'-0"

GENERAL NOTES

THIS DRAWING CONTAINS INFORMATION PROPRIETARY TO SAFETY-KLEEN CORPORATION. ANY REPRODUCTION, DISCLOSURE OR USE OF THIS DRAWING IS EXPRESSLY PROHIBITED EXCEPT BY SAFETY-KLEEN OR AS SAFETY-KLEEN MAY AGREE IN WRITING.

1. INDICATES CLASS 1 DIVISION 1 DEVICES AND WIRING METHODS. ALL BOXES, MOTORS, ETC. SHALL BE EXPLOSION PROOF OR INTRINSICALLY SAFE. ALL CONDUIT SHALL BE GALVANIZED RIGID METAL WITH NPT THREADED CONNECTIONS. ALL CONDUIT BONDED. LIGHT SWITCHES MAY BE IN NEMA 13 BOXES, WHEN USING INTRINSICALLY SAFE BARRIER RELAYS.

2. INDICATES CLASS 1, DIVISION 2 DEVICES AND WIRING METHODS. ALL CONDUIT SHALL BE THREADED RIGID METAL EXTENDING TO OUTSIDE CLASS 2 AREA. ALL CONDUIT BONDED.

3. "NORMAL" WIRING. ELECTRICAL CONTRACTOR SHALL USE HEAVY DUTY WIRING METHODS. SEAL WHERE CONNECTING TO CLASS 1, DIVISION 2 PER NEC. ALL ENCLOSURES SHALL BE NEMA 13 OIL TIGHT. ALL CONDUIT BONDED.

4. BOTTOM OF PANELBOARD, SK5213, DRUM WASHER CONTROLLER, SWITCHES, ETC. SHALL NOT BE LESS THAN 3'-0" AFF.

5. ALL WIRE IN RETURN/FILL AND WAREHOUSE SHALL BE LABELED "GASOLINE AND OIL RESISTANT." THWN COPPER. SIZE SHALL BE #12 THWN UNLESS OTHERWISE SPECIFIED.

6. DENOTES JOG SWITCH FOR WASTE MINERAL SPIRITS PUMP. SEE NOTE 1.

7. DENOTES EMERGENCY DISCONNECT FOR WASTE MINERAL SPIRITS PUMP. 2 HP RATED DPST SWITCH. SEE NOTE 1.

8. DENOTES WASTE MINERAL SPIRITS PUMP MOTOR. SEE NOTE 1.

9. SEE DRAWING 100-0 FOR FLOAT SWITCH INSTALLATION AND DRUM WASHER INSTALLATION. FLOAT SWITCH SUPPLIED BY OWNER.

10. DRUM WASHER UNIT, DRUM WASHER CONTROL PANEL, AND SK5213 PANEL ARE SUPPLIED BY OWNER.

11. 1.5 H.P. COMPRESSOR TO BE HARD WIRED TO PANEL LPC. POWER COMPRESSOR FROM 30A SINGLE POLE BREAKER WITH 2-#10 CU THWN AND 1-#12 CU GRND. IN 1/2" EMT. AIR LINE TO BE RUN THROUGH WALL AND FITTED WITH APPROPRIATE HOSE COUPLING. COORDINATE LOCATION WITH S-K SITE MANAGER.

12. SPRITZER TO BE HARD WIRED FROM 20A SINGLE POLE BREAKER WITH 2-#12 CU THWN AND 1-#12 CU GRND. IN 1/2" RIDGID CONDUIT. SEE NOTE 1.

LICENSED PROFESSIONAL ENGINEER
JACK G. BEDESSEM
062-049091
STATE OF ILLINOIS

signature

4/28/03
date

A TriHydro Corporation representative conducted an on-site field inspection to verify equipment, components, dimensions and existing conditions on April 10, 2003. Items inaccessible to visual observations were not field verified during this inspection. Revisions to these drawings (based on the inspection) were coordinated through the Safety-Kleen Engineering Department, as necessary.

Electrical to process equipment did not exist in proposed return/fill area at time of April 10, 2003 inspection.

TriHydro Corporation
Engineering and Environmental Consulting
920 Sheridan Street
Laramie, Wyoming 82070

LEGEND

INDICATES KEYED NOTES.

Project Solutions Companies
1390 Boone Industrial Drive • Suite 200 • Columbia • MO 65202
• Phone: (573) 443-7100 • Fax: (573) 443-7181 •

FIGURE D-18

NO.	DESCRIPTION	BY	CHK	APPR	DATE
A	REVISED FOR PART B	JEK	KLS	KLS	021703

REVISIONS

TITLE: RETURN/FILL AND WAREHOUSE AREA POWER PLAN

SAFETY-KLEEN CORP.
777 BIG TIMBER ROAD ELGIN, ILLINOIS 60123 PHONE 708-697-8460

SCALE	BY	CHKD	P.E. APPR	OP. APPR	DATE
1/8" = 1'-0"	PROJSOL				2/12/03

SERVICE CENTER LOCATION	SC-DWG-REV NO.	SHEET NO.
PEKIN, IL.	513601-407-1	A

8-27-92 1:10 PM 20314070.DWG

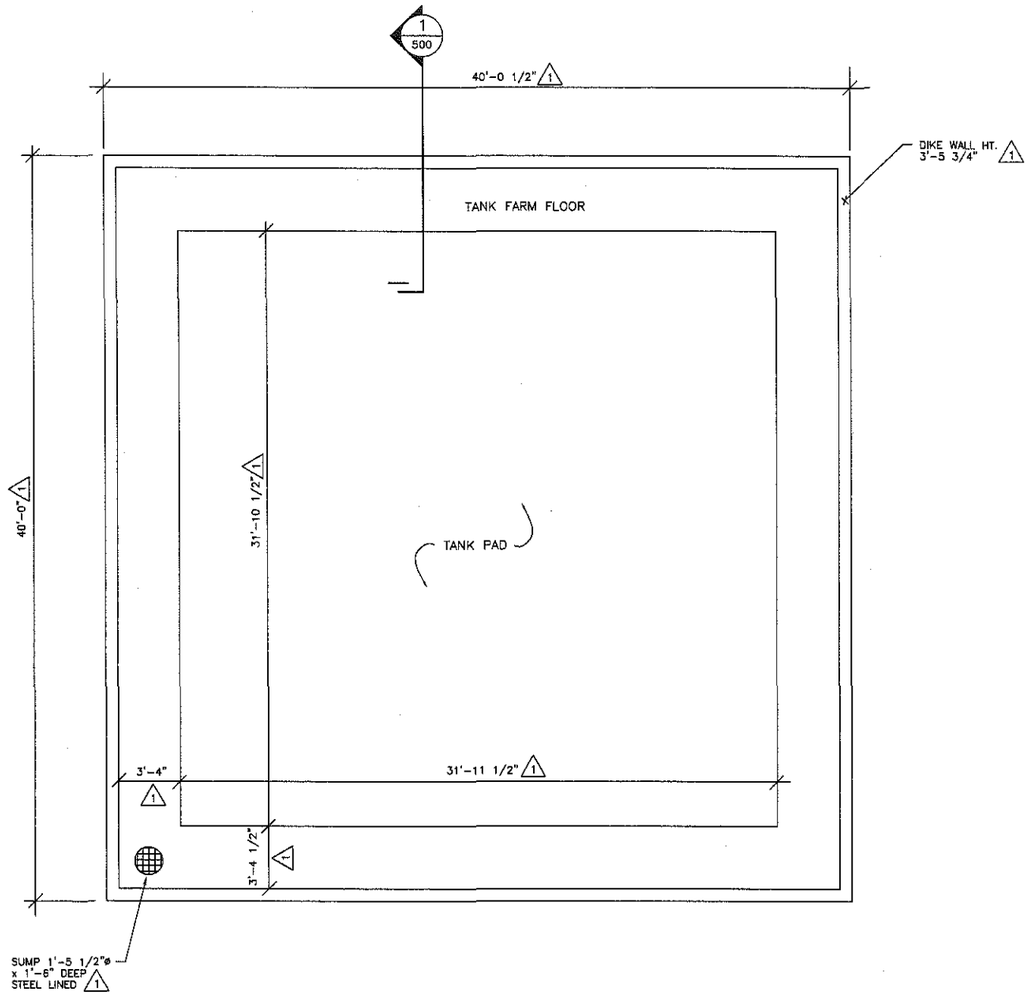

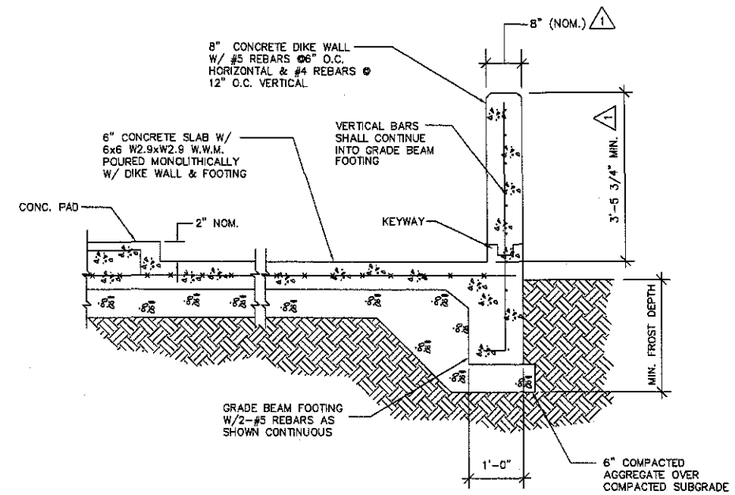

1/500 4-PACK TANK FARM SLAB & DIKE WALL SECTION
TYPICAL CONSTRUCTION
NO SCALE

TANKFARM PLAN
NORTH
0 2 4 8 12

A TriHydro Corporation representative conducted an on-site field inspection to verify, equipment, components, dimensions and existing conditions on April 10, 2003. Items inaccessible to visual observations were not field verified during this inspection. Revisions to these drawings (based on the inspection) were coordinated through the Safety-Kleen Engineering Department, as necessary.

TriHydro Corporation
Engineering and Environmental Consulting
920 Sheridan Street
Laramie, Wyoming 82070

GENERAL NOTES

1. INDICATES AS BUILT MEASUREMENT OR FIELD VERIFICATION OF EXISTING CONDITION 3-11-93.
2. DETAILS INDICATED AS TYPICAL CONSTRUCTION IDENTIFY TYPICAL SAFETY-KLEEN CONSTRUCTION PRACTICES WHICH WERE NOT FIELD VERIFIED UNLESS SPECIFICALLY INDICATED.

PROPRIETARY STATEMENT

THIS DRAWING IS THE EXCLUSIVE PROPERTY OF SAFETY-KLEEN CORP. AND IS PROPRIETARY AND CONFIDENTIAL INFORMATION. THIS DRAWING AND THE INFORMATION CONTAINED THEREIN MUST NOT BE DUPLICATED, USED, DIVULGED, REPRODUCED, COPIED, DISCLOSED OR APPROPRIATED IN WHOLE OR IN PART FOR ANY PURPOSE OTHER THAN AS EXPRESSLY AUTHORIZED BY SAFETY-KLEEN CORP. THIS DRAWING MUST BE RETURNED

LICENSED PROFESSIONAL ENGINEER
JACK G. BEDESSEM
062-049091
STATE OF ILLINOIS

signature
4/28/03
date

Project Solutions Companies
1390 Boone Industrial Drive • Suite 200 • Columbia • MO 65202
• Phone: (573) 443-7100 • Fax: (573) 443-7181 •

FIGURE D-19

NO.	DESCRIPTION	BY	CHK	APPR	DATE
1	MISC. REVISIONS	CWM	GPM	-	040293

REVISIONS

TITLE
4-PACK TANK FARM
PLAN AND DETAILS

SAFETY-KLEEN CORP.
777 BIG TIMBER ROAD ELGIN, ILLINOIS 60123 PHONE 708-697-8460

SCALE	BY	CHKD	APPROVED	OPERATIONS	DATE
AS SHOWN	RJ	CWM			3-16-93

SERVICE CENTER LOCATION	SC-DWG. NO.-REV. NO.	SHEET NO.
PEKIN, IL	MFPB-500-0	

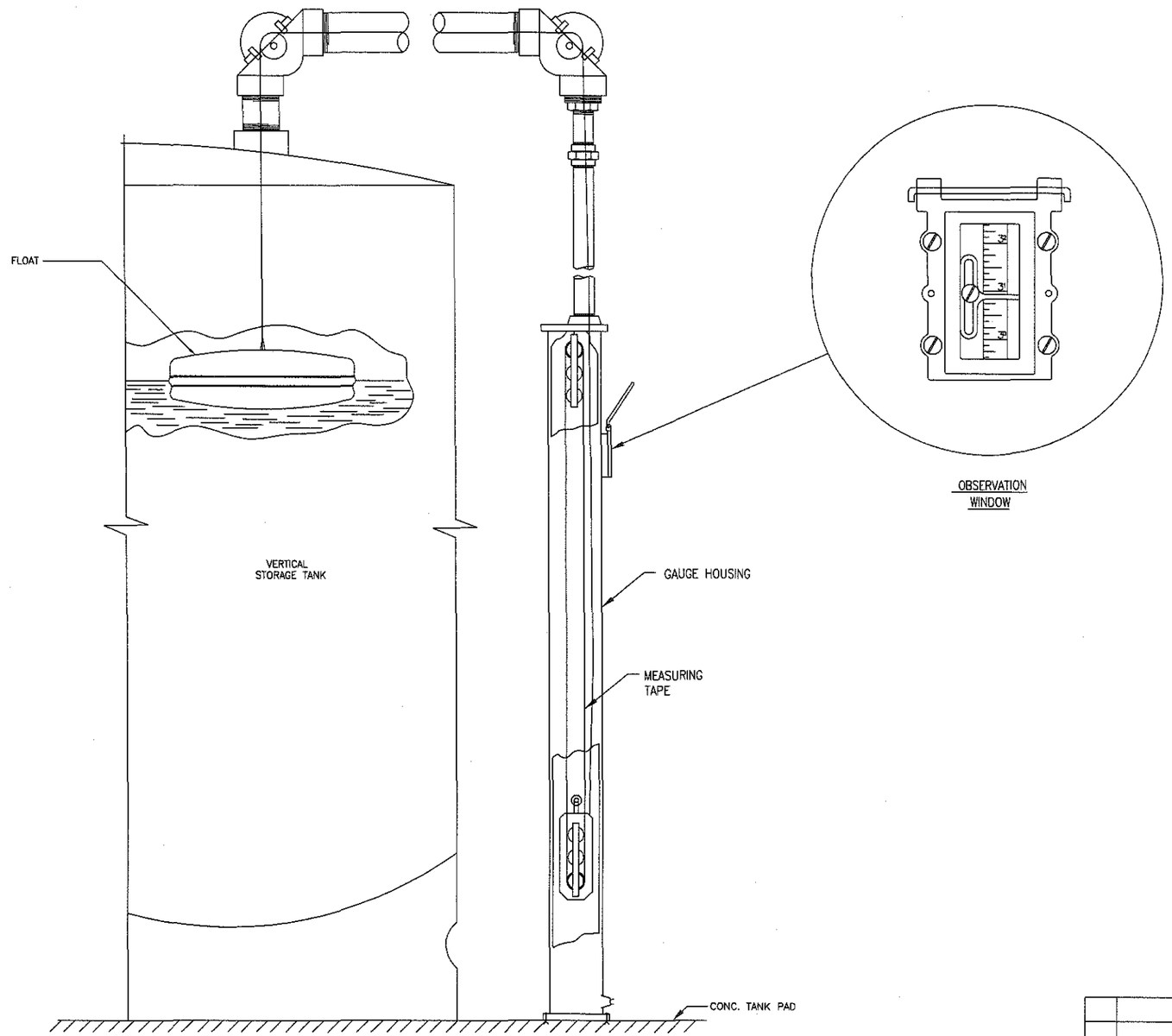

VERT. STORAGE TANK – GAUGE DETAIL
TYPICAL CONSTRUCTION

NO SCALE

LICENSED PROFESSIONAL ENGINEER
JACK G. BEDESSEM
062-049091
STATE OF ILLINOIS

signature

4/28/03
date

A TriHydro Corporation representative conducted an on-site field inspection to verify, equipment, components, dimensions and existing conditions on April 10, 2003. Items inaccessible to visual observations were not field verified during this inspection. Revisions to these drawings (based on the inspection) were coordinated through the Safety-Kleen Engineering Department, as necessary.

TriHydro Corporation
Engineering and Environmental Consulting
920 Sheridan Street
Laramie, Wyoming 82070

GENERAL NOTES

1. ALL DIMENSIONS AND DETAILS ON THIS SHEET ARE TYPICAL PER MANUFACTURER.
2. DETAILS INDICATED AS TYPICAL CONSTRUCTION IDENTIFY TYPICAL SAFETY-KLEEN CONSTRUCTION PRACTICES WHICH WERE NOT FIELD VERIFIED UNLESS SPECIFICALLY INDICATED.

PROPRIETARY STATEMENT

THIS DRAWING IS THE EXCLUSIVE PROPERTY OF SAFETY-KLEEN CORP. AND IS PROPRIETARY AND CONFIDENTIAL INFORMATION. THIS DRAWING AND THE INFORMATION CONTAINED THEREIN MUST NOT BE DUPLICATED, USED, DIVULGED, REPRODUCED, COPIED, DISCLOSED OR APPROPRIATED IN WHOLE OR IN PART FOR ANY PURPOSE OTHER THAN AS EXPRESSLY AUTHORIZED BY SAFETY-KLEEN CORP. THIS DRAWING MUST BE RETURNED PROMPTLY UPON REQUEST.

Project Solutions Companies

FIGURE D-20

1390 Boone Industrial Drive • Suite 200 • Columbia • MO 65202
• Phone: (573) 443-7100 • Fax: (573) 443-7181 •

NO.	DESCRIPTION	BY	CHK	APPR	DATE

REVISIONS

TITLE
MOORMANN BROS.
TANK GAUGE DETAILS

SAFETY-KLEEN CORP.
777 BIG TIMBER ROAD ELGIN, ILLINOIS 60123 PHONE 708-697-6460

SCALE	BY	CHKD	APPROVED	OPERATIONS	DATE
AS SHOWN	RJ	CWM			3-31-93

SERVICE CENTER LOCATION	SC-DWG. NO.-REV. NO.	SHEET NO.
PEKIN, IL	MFPB-102-0	

3-30-93 12:00F PB1020.DWG 9238.11

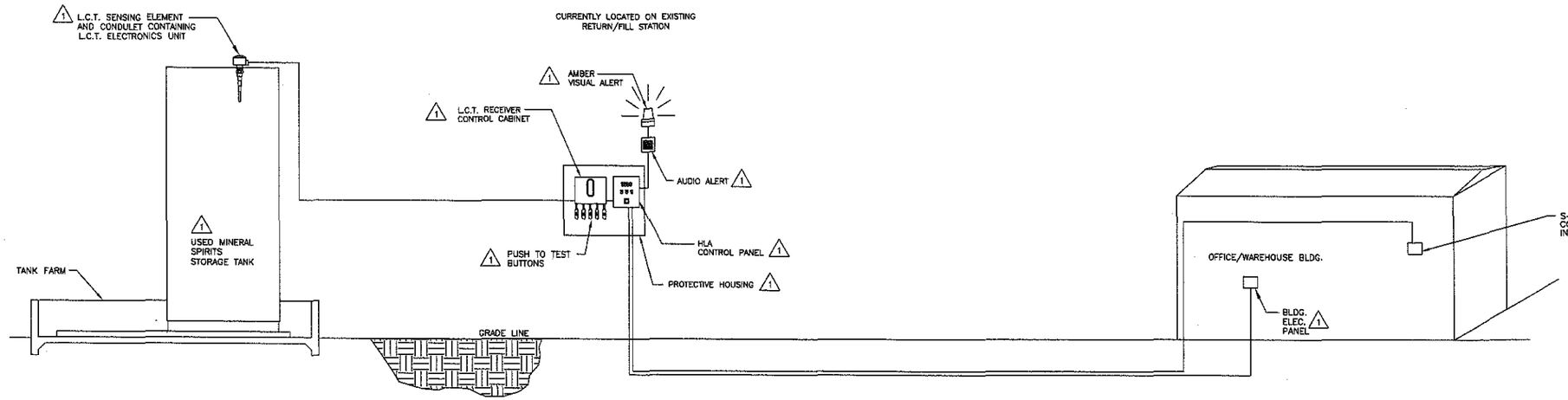

HIGH LEVEL ALARM SYSTEM DIAGRAM
TYPICAL CONSTRUCTION
SCALE: NONE

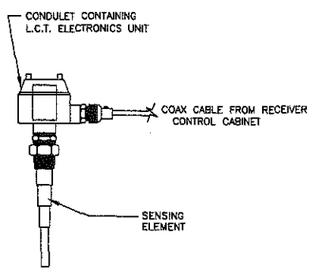

L.C.T. SENSING ELEMENT AND CONDULET DETAIL
TYPICAL CONSTRUCTION
SCALE: NONE

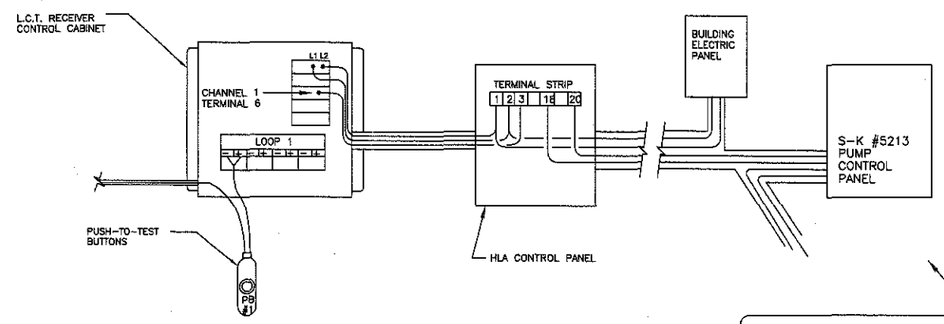

TANK HLA SYSTEM CONTROL WIRING LAYOUT
TYPICAL CONSTRUCTION
SCALE: NONE

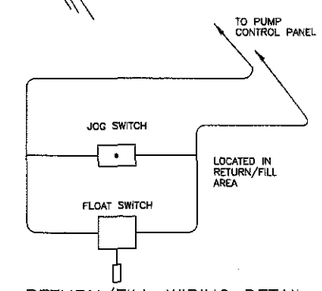

RETURN/FILL WIRING DETAIL
SCALE: NONE

LICENSED PROFESSIONAL ENGINEER JACK G. BERGSTEN 062-[illegible] STATE OF ILLINOIS

signature

4/28/03
date

A TriHydro Corporation representative conducted an on-site field inspection to verify, equipment, components, dimensions and existing conditions on April 10, 2003. Items inaccessible to visual observations were not field verified during this inspection. Revisions to these drawings (based on the inspection) were coordinated through the Safety-Kleen Engineering Department, as necessary.

TriHydro Corporation
Engineering and Environmental Consulting
920 Sheridan Street
Laramie, Wyoming 82070

GENERAL NOTES

1. INDICATES AS BUILT MEASUREMENT OR FIELD VERIFICATION OF EXISTING CONDITION ON 3-5-93.

2. DETAILS INDICATED AS TYPICAL CONSTRUCTION IDENTIFY TYPICAL SAFETY-KLEEN CONSTRUCTION PRACTICES WHICH WERE NOT FIELD VERIFIED UNLESS SPECIFICALLY INDICATED.

PROPRIETARY STATEMENT

THIS DRAWING IS THE EXCLUSIVE PROPERTY OF SAFETY-KLEEN CORP. AND IS PROPRIETARY AND CONFIDENTIAL INFORMATION. THIS DRAWING AND THE INFORMATION CONTAINED THEREIN MUST NOT BE DUPLICATED, USED, DIVULGED, REPRODUCED, COPIED, DISCLOSED OR APPROPRIATED IN WHOLE OR IN PART FOR ANY PURPOSE OTHER THAN AS EXPRESSLY AUTHORIZED BY SAFETY-KLEEN CORP. THIS DRAWING MUST BE RETURNED PROMPTLY UPON REQUEST.

Project Solutions Companies
1390 Boone Industrial Drive • Suite 200 • Columbia • MO 65202
• Phone: (573) 443-7100 • Fax: (573) 443-7181 •

FIGURE D-21

NO.	DESCRIPTION	BY	CHK	APPR	DATE
A	REVISED FOR PART B	JEK	KLS	KLS	021703

REVISIONS

TITLE: USED PARTS WASHER SOLVENT HIGH LEVEL ALARM SYSTEM DIAGRAM

SAFETY-KLEEN CORP.
777 BIG TIMBER ROAD ELGIN, ILLINOIS 60123 PHONE 708-697-8460

SCALE	BY	CHKD	APPROVED	OPERATIONS	DATE
AS SHOWN	RJ	CWM			3-31-93

SERVICE CENTER LOCATION	SC-DWG. NO.-REV. NO.	SHEET NO.
PEKIN, IL	513601-400-0	A

3-30-93 12:00PM MFP84000.DWG 9238.11

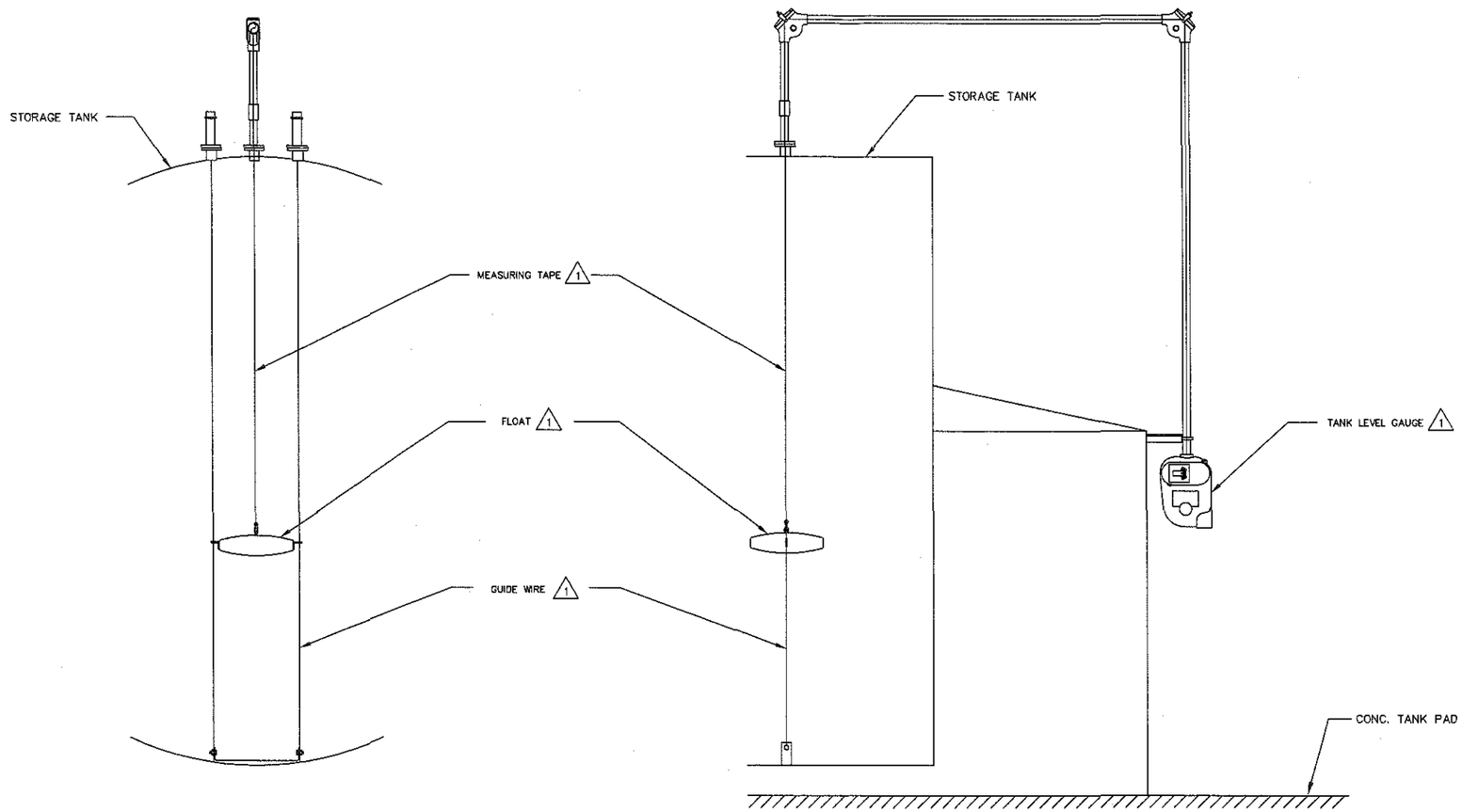

HORIZONTAL STORAGE TANK – GAUGE DETAIL
TYPICAL CONSTRUCTION

NO SCALE

signature

4/28/03
date

A TriHydro Corporation representative conducted an on-site field inspection to verify, equipment, components, dimensions and existing conditions on April 10, 2003. Items inaccessible to visual observations were not field verified during this inspection. Revisions to these drawings (based on the inspection) were coordinated through the Safety-Kleen Engineering Department, as necessary.

TriHydro Corporation
Engineering and Environmental Consulting
920 Sheridan Street
Laramie, Wyoming 82070

GENERAL NOTES

1. INDICATES AS BUILT MEASUREMENT OR FIELD VERIFICATION OF EXISTING CONDITION 3-11-93.

2. DETAILS INDICATED AS TYPICAL CONSTRUCTION IDENTIFY TYPICAL SAFETY-KLEEN CONSTRUCTION PRACTICES WHICH WERE NOT FIELD VERIFIED UNLESS SPECIFICALLY INDICATED.

PROPRIETARY STATEMENT

THIS DRAWING IS THE EXCLUSIVE PROPERTY OF SAFETY-KLEEN CORP. AND IS PROPRIETARY AND CONFIDENTIAL INFORMATION. THIS DRAWING AND THE INFORMATION CONTAINED THEREIN MUST NOT BE DUPLICATED, USED, DIVULGED, REPRODUCED, COPIED, DISCLOSED OR APPROPRIATED IN WHOLE OR IN PART FOR ANY PURPOSE OTHER THAN AS EXPRESSLY AUTHORIZED BY SAFETY-KLEEN CORP. THIS DRAWING MUST BE RETURNED PROMPTLY UPON REQUEST.

Project Solutions Companies

FIGURE D-22

1390 Boone Industrial Drive • Suite 200 • Columbia • MO 65202 • Phone: (573) 443-7100 • Fax: (573) 443-7181 •

NO.	DESCRIPTION	BY	CHK	APPR	DATE

REVISIONS

TITLE

HORIZONTAL TANK LEVEL GAUGE

SAFETY-KLEEN CORP.
777 BIG TIMBER ROAD ELGIN, ILLINOIS 60123 PHONE 708-697-8460

SCALE	BY	CHKD	APPROVED	OPERATIONS	DATE
AS SHOWN	RJ	CWM			3-31-93

SERVICE CENTER LOCATION	SC-DWG. NO.-REV. NO.	SHEET NO.
PEKIN, IL.	MFPB-109-0	

3-30-93 12:00pm MFPB1090.DWG 9238.11

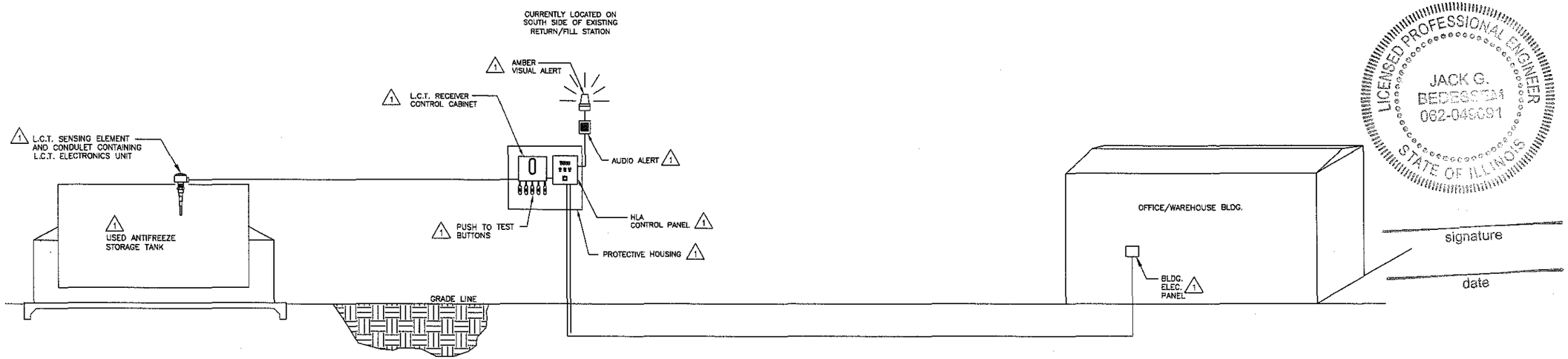

HIGH LEVEL ALARM SYSTEM DIAGRAM
TYPICAL CONSTRUCTION
SCALE: NONE

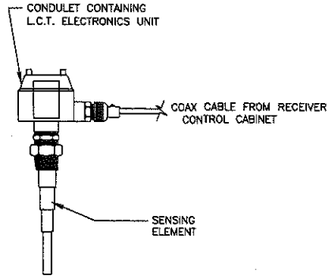

L.C.T. SENSING ELEMENT AND CONDULET DETAIL
TYPICAL CONSTRUCTION
SCALE: NONE

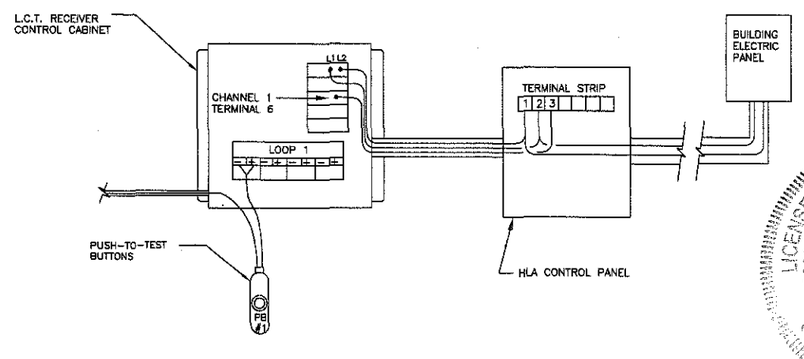

TANK HLA SYSTEM CONTROL WIRING LAYOUT
TYPICAL CONSTRUCTION
SCALE: NONE

LICENSED PROFESSIONAL ENGINEER
JACK G. BEDESSEM
062-049091
STATE OF ILLINOIS

signature
date

LICENSED PROFESSIONAL ENGINEER
JACK G. BEDESSEM
062-04909
STATE OF ILLINOIS

signature
4/28/03
date

A TriHydro Corporation representative conducted an on-site field inspection to verify, equipment, components, dimensions and existing conditions on April 10, 2003. Items inaccessible to visual observations were not field verified during this inspection. Revisions to these drawings (based on the inspection) were coordinated through the Safety-Kleen Engineering Department, as necessary.

TriHydro Corporation
Engineering and Environmental Consulting
920 Sheridan Street
Laramie, Wyoming 82070

GENERAL NOTES

1. INDICATES AS BUILT MEASUREMENT OR FIELD VERIFICATION OF EXISTING CONDITION ON 3-5-93.
2. DETAILS INDICATED AS TYPICAL CONSTRUCTION IDENTIFY TYPICAL SAFETY-KLEEN CONSTRUCTION PRACTICES WHICH WERE NOT FIELD VERIFIED UNLESS SPECIFICALLY INDICATED.

PROPRIETARY STATEMENT

THIS DRAWING IS THE EXCLUSIVE PROPERTY OF SAFETY-KLEEN CORP. AND IS PROPRIETARY AND CONFIDENTIAL INFORMATION. THIS DRAWING AND THE INFORMATION CONTAINED THEREIN MUST NOT BE DUPLICATED, USED, DIVULGED, REPRODUCED, COPIED, DISCLOSED OR APPROPRIATED IN WHOLE OR IN PART FOR ANY PURPOSE OTHER THAN AS EXPRESSLY AUTHORIZED BY SAFETY-KLEEN CORP. THIS DRAWING MUST BE RETURNED PROMPTLY UPON REQUEST.

Project Solutions Companies
1390 Boone Industrial Drive • Suite 200 • Columbia • MO 65202
• Phone: (573) 443-7100 • Fax: (573) 443-7181 •

FIGURE D-23

NO.	DESCRIPTION	BY	CHK	APPR	DATE

REVISIONS

TITLE
USED ANTIFREEZE
HIGH LEVEL ALARM
SYSTEM DIAGRAM

SAFETY-KLEEN CORP.
777 BIG TIMBER ROAD ELGIN, ILLINOIS 60123 PHONE 708-697-8460

SCALE	BY	CHKD	APPROVED	OPERATIONS	DATE
AS SHOWN	RJ	CWM			3-31-93

SERVICE CENTER LOCATION	SC-DWG. NO.-REV. NO.	SHEET NO.
PEKIN, IL	MFPB-401-0	

B4010.DWG 9238.11
3-30-93 12:00PM

ELECTRICAL EQUIPMENT SCHEDULE

TAG	DESCRIPTION	VOLTAGE	LOAD	REMARKS
ACCU 1	CONDENSING UNIT	208/3	43.6 A RLA	PROVIDE CB DISCONNECT NEMA 4X, 100A CIRCUIT BREAKER
- -	NOT USED			
AHU 1	AIR HANDLING UNIT	208V 1Ø	3/4 HP	ELECTRICAL CONTRACTOR SHALL FURNISH & INSTALL MAGNETIC STARTER & FUSED DISCONNECT, NEMA SIZE 00, 9 AMP FUSE
- -	NOT USED			
EF 1	EXHAUST FAN	120V	1/4 H.P.	ELEC. CONTR. SHALL FURNISH & INSTALL COMBINATION STARTER-FUSED DISCONNECT NEMA 4X, NEMA #00 STARTER, 9 AMP FUSE
- -	NOT USED			
EF 3	EXHAUST FAN	120V	1 HP	ELC SHALL FURNISH AND INSTALL COMBINATION STARTER-FUSED DISCONNECT, NEMA SIZE #0 STARTER 20 AMP FUSE
EF 4	EXHAUST FAN	120V	1/6 HP	ELC SHALL FURNISH AND INSTALL COMBINATION STARTER-FUSED DISCONNECT, NEMA SIZE #00 STARTER 7 AMP FUSE
EF 5	EXHAUST FAN	120 1Ø	1/4 HP	ELECTRICAL CONTRACTOR SHALL FURNISH AND INSTALL CONTACTOR AND MANUAL STARTER SWITCH. EXPLOSIONPROOF MOTOR
EF 7	EXHAUST FAN	208 1Ø	3/4 HP	ELECTRICAL CONTRACTOR SHALL FURNISH AND INSTALL MAGNETIC STARTER AND FUSED DISCONNECT NEMA SIZE 00, 10 AMP FUSE
EF 8	EXHAUST FAN	120 1Ø	1/6 HP	ELECTRICAL CONTRACTOR SHALL FURNISH AND INSTALL CONTACTOR AND MANUAL STARTER SWITCH OUTSIDE CLASSIFIED AREAS. EXPLOSIONPROOF MOTOR
⚠ - -	DRUM WASHER	208 1Ø	2 HP 3/4 HP	LOCAL CLASS 1 DIVISION 1 NON-FUSED DPST EMERGENCY DISCONNECT SUPPLIED. BY OWNER, INSTALLED BY ELC. STARTER AND CONTROLS SUPPLIED BY OWNER AS PART OF DWCP
⚠ F 1	GAS FIRED FURNACE	208/3	2 HP	ELEC. CONTR. SHALL FURNISH & INSTALL 30A DISCONNECT SWITCH AND FINAL POWER CONNECTIONS, CONTROL & INTERLOCK WIRING BY HAC
C 1	AIR COMPRESSOR (SUPPLIED BY OWNER)	208 1Ø	7.5 H.P.	ELECTRICAL CONTRACTOR SHALL FURNISH AND INSTALL 60A FUSED DISCONNECT SWITCH & MAKE ALL FINAL POWER CONNECTIONS
⚠ C 2	AIR COMPRESSOR (SUPPLIED BY OWNER)	120 1Ø	1.5 H.P.	ELECTRICAL CONTRACTOR SHALL FURNISH AND INSTALL 60A FUSED DISCONNECT SWITCH & MAKE ALL FINAL POWER CONNECTIONS
⚠ P 1	CLEAN MINERAL SPIRITS PUMP	208 1Ø	1 HP	LOCAL CLASS 1 DIVISION 1 NON-FUSED DPST EMERGENCY DISCONNECT F&I BY ELC. STARTER AND CONTROLS ARE SUPPLIED BY OWNER AS A PART OF SK5213 PANEL
⚠ P 2	CLEAN MINERAL SPIRITS PUMP	208 1Ø	1.5 HP	LOCAL CLASS 1 DIVISION 1 NON-FUSED DPST EMERGENCY DISCONNECT F&I BY ELC. STARTER AND CONTROLS ARE SUPPLIED BY OWNER AS A PART OF SK5213 PANEL
⚠ P 3	WASTE MINERAL SPIRITS PUMP	208 1Ø	1 1/2 HP	LOCAL CLASS 1 DIVISION 1 NON-FUSED DPST EMERGENCY DISCONNECT F&I BY ELC. STARTER AND CONTROLS SUPPLIED BY OWNER AS PART OF SK5213 PANEL.
⚠ MP 1	UMS RECIRC. PUMP	208 1Ø	1.5 HP	LOCAL CLASS 1 DIVISION 1 NON-FUSED DPST EMERGENCY DISCONNECT F&I BY ELC. STARTER AND CONTROLS ARE SUPPLIED BY OWNER AS A PART OF SK5213 PANEL

GENERAL NOTES

⚠ EQUIPMENT THAT PERTAINS TO THIS SCOPE OF WORK ONLY

PROPRIETARY STATEMENT

THIS DRAWING IS THE EXCLUSIVE PROPERTY OF SAFETY-KLEEN CORP. AND IS PROPRIETARY AND CONFIDENTIAL INFORMATION. THIS DRAWING AND THE INFORMATION CONTAINED THEREIN MUST NOT BE DUPLICATED, USED, DIVULGED, REPRODUCED, COPIED, DISCLOSED OR APPROPRIATED IN WHOLE OR IN PART FOR ANY PURPOSE OTHER THAN AS EXPRESSLY AUTHORIZED BY SAFETY-KLEEN CORP. THIS DRAWING MUST BE RETURNED PROMPTLY UPON REQUEST.

Project Solutions Companies

1390 Boone Industrial Drive • Suite 200 • Columbia • MO 65202 • Phone: (573) 443-7100 • Fax: (573) 443-7181 •

FIGURE D-24

TITLE TITLE

EQUIPMENT & LIGHTING FIXTURE SCHEDULES

SAFETY-KLEEN CORP.

777 BIG TIMBER ROAD ELGIN, ILLINOIS 60123 PHONE 708-697-8460

NO.	DESCRIPTION	BY	CHK	APPR	DATE

REVISIONS

SCALE	BY	CHKD	P.E. APPR	OP. APPR	DATE
NONE	PROJSOL	CPM			8-12-92

SERVICE CENTER LOCATION	SC-DWG-REV NO.	SHEET NO.
PEKIN, IL.	513601-426-0	

8-27-92 3:05 PM 20314260.DWG

PANEL EM LOAD SCHEDULE

VOLTAGE: 120/208 V
MAINS: 100A
MOUNTING: SURFACE

3Ø 4W.
MAIN LUG ONLY

CIRCUIT USE	TRIP	CONNECTED LOAD A	CONNECTED LOAD B	CONNECTED LOAD C	CCT NO.	A B C	CCT NO.	CONNECTED LOAD A	CONNECTED LOAD B	CONNECTED LOAD C	TRIP	CIRCUIT USE
SPARE	20 A				1		2	952			20 A	EXHAUST FAN EF 7
EHAUST FAN EF 6	20 A		1224		3		4		952			
SPARE	20 A				5		6			1267	20 A	FURNACE F 2
FURNACE F 1	20 A	1267			7		8	1267				FURNACE F 2
FURNACE F 1			1267		9		10		1267			FURNACE F 2
FURNACE F 1				1267	11		12					SPACE
SPACE					13		14					SPACE
SPACE					15		16					SPACE
SPACE					17		18					SPACE
SPACE					19		20					SPACE
												NOT USED
NOT USED												NOT USED
NOT USED												NOT USED
NOT USED												NOT USED
NOT USED												NOT USED
NOT USED												NOT USED
NOT USED												NOT USED
NOT USED												NOT USED
NOT USED												NOT USED
NOT USED												NOT USED
NOT USED												NOT USED
TOTAL WATTS ON A PHASE		1267						2219				3486
TOTAL WATTS ON B PHASE			2491						2219			4710
TOTAL WATTS ON C PHASE				1267						1267		2534
									TOTAL WATTS THIS PANEL			10730
									TOTAL AMPERAGE			30

PANEL LPC LOAD SCHEDULE

VOLTAGE: 120/208 V
MAINS: 200 A
MOUNTING: SURFACE

3Ø 4W.
MAIN LUG ONLY

CIRCUIT USE	TRIP	CONNECTED LOAD A	CONNECTED LOAD B	CONNECTED LOAD C	CCT NO.	A B C	CCT NO.	CONNECTED LOAD A	CONNECTED LOAD B	CONNECTED LOAD C	TRIP	CIRCUIT USE
WAREHOUSE LIGHTS	20 A	960			1		2	900			20 A	RECEPTACLES
WAREHOUSE LIGHTS	20 A		960		3		4		864		20 A	OVERHEAD DOOR
RETURN FILL LIGHTS	20 A			960	5		6				20 A	SPARE
SPARE	20 A				7		8	864			20 A	OVERHEAD DOOR
⚠ SUMP PUMP RECEPTACLE	20 A		1000		9		10		0		40 A	FUT DRUM WASHER CONTROL PANEL
⚠ DRUN WASHER CONTROL PANEL	40 A			2627	11		12			0		FUT DRUM WASHER CONTROL PANEL
⚠ DRUN WASHER CONTROL PANEL		2627			13		14				20 A	SPARE
⚠ SK5213 CONTROL PANEL	40 A		2376		15		16				20 A	SPARE
⚠ SK5213 CONTROL PANEL				2376	17		18			5760	70 A	COMPRESSOR C 1
EXTERIOR/DOCK LIGHTS	20 A	388			19		20	5760				COMPRESSOR C 1
ENDWALL/DOCK/PIPE BRIDGE LITES	20 A		1260		21		22		864		20 A	OVERHEAD DOOR
DOCK SEALS	20 A			1176	23		24			800	20 A	SPRITZER ⚠
DOCK SEALS	20 A	1176			25		26	2400			30 A	1.5 H.P. COMPRESSOR ⚠
DOCK SEALS	20 A		1176		27		28				20 A	SPARE
SPARE	20 A				29		30					SPACE
DOCK SEALS	20 A	1176			31		32					SPACE
SPARE	20 A				33		34					SPACE
SPACE					35		36					SPACE
SPACE					37		38					SPACE
SPACE					39		40					SPACE
SPACE					41		42			864	20 A	OVERHEAD DOOR
TOTAL WATTS ON A PHASE		6327						9924				16251
TOTAL WATTS ON B PHASE			6772						1728			8500
TOTAL WATTS ON C PHASE				7139						7424		14563
									TOTAL WATTS THIS PANEL			39314
									TOTAL AMPERAGE			109

GENERAL NOTES

⚠ EQUIPMENT THAT PERTAINS TO THIS SCOPE OF WORK ONLY

PROPRIETARY STATEMENT

THIS DRAWING IS THE EXCLUSIVE PROPERTY OF SAFETY-KLEEN CORP. AND IS PROPRIETARY AND CONFIDENTIAL INFORMATION. THIS DRAWING AND THE INFORMATION CONTAINED THEREIN MUST NOT BE DUPLICATED, USED, DIVULGED, REPRODUCED, COPIED, DISCLOSED OR APPROPRIATED IN WHOLE OR IN PART FOR ANY PURPOSE OTHER THAN AS EXPRESSLY AUTHORIZED BY SAFETY-KLEEN CORP. THIS DRAWING MUST BE RETURNED PROMPTLY UPON REQUEST.

Project Solutions Companies
1390 Boone Industrial Blvd Ste 200 Columbia MO 65202
Phone: (573) 443-7100 Fax: (573) 443-7181

FIGURE D-25

TITLE
ELECTRICAL PANEL BOARD SCHEDULES

SAFETY-KLEEN CORP.
777 BIG TIMBER ROAD ELGIN, ILLINOIS 60123 PHONE 708-697-8460

NO.	DESCRIPTION	BY	CHK	APPR	DATE

REVISIONS

SCALE	BY	CHKD	P. E. APPR	OP. APPR	DATE
NONE	PROJSOL				8-12-92

SERVICE CENTER LOCATION	SC-DWG-REV NO.	SHEET NO.
PEKIN, IL.	513601-425-0	

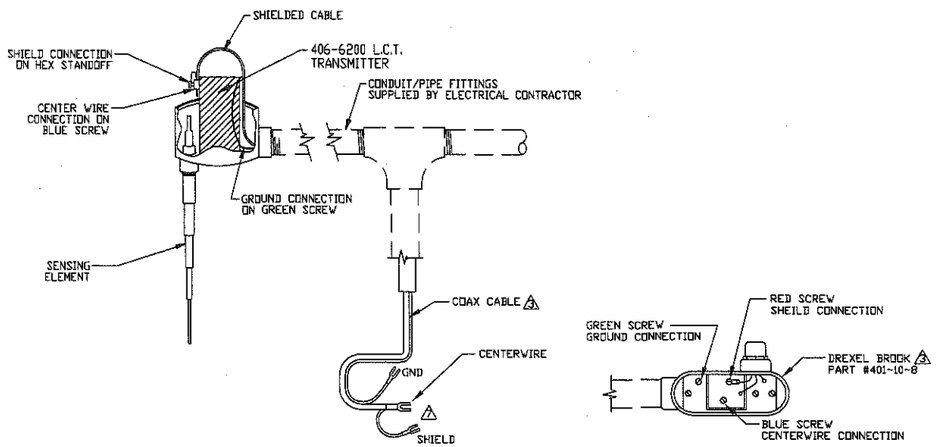

PUSH-TO-TEST BUTTON WIRING DETAIL

SCALE: NONE

TERMINATIONS OF COAXIAL CABLE

1. CUT CABLE TO REQUIRED LENGTH PLUS 5". STRIP THE GROUND TRACER WIRE AWAY FROM THE COAX TO A LENGTH OF ABOUT 6". STRIP ABOUT 1/4" OF INSULATION FROM THE END OF THE WIRE. CRIMP AN 18-22 GA. SPADE TERMINAL LUG ONTO THE GROUND WIRE.

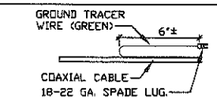

2. TRIM OUTER INSULATION BACK 1 1/4", CUTTING DOWN TO BUT NOT INCLUDING BRAIDED METALLIC SHIELD.

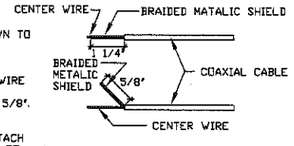

3. UNRAVEL THE METALLIC BRAID FROM THE CENTER WIRE INSULATION. TWIST THE BRAID TIGHTLY TOGETHER. CUT THE TWISTED BRAID TO A LENGTH OF ABOUT 5/8".

4. USING A 14-16 GA. CRIMP-ON BUTT CONNECTOR, ATTACH A 4" PIECE OF 20 GA. STRANDED INSULATED WIRE TO THE TWISTED BRAID. IN ORDER TO MAKE A STRONG CONNECTION WITH THE LARGER GAUGE OF THE BUTT CONNECTOR, A 3/8" STRIPPED LENGTH OF THE 20 GA. WIRE SHOULD BE TWISTED AND THEN FOLDED BACK UPON ITSELF BEFORE INSERTION INTO THE BUTT CONNECTOR. CRIMP AN 18-22 GA. SPADE TERMINAL LUG ONTO THE OTHER END OF THE 4" WIRE. USE 3M #33+ ELECTRICAL TAPE OR EQUAL TO TAPE BARE BRAIDED SHIELD. BE SURE BARE BRAIDED SHIELD WIRE IS WELL COVERED.

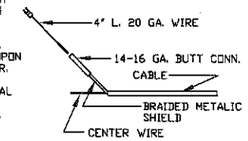

5. TRIM ABOUT 1/4" OF THE INNER PLASTIC INSULATION TO EXPOSE THE CENTER WIRE. SLIP AN 18-22 GA. SPADE TERMINAL LUG OVER THE BARE CENTER WIRE SO THAT THE INSULATION OF THE SPADE LUG BOTTOMS OUT ON THE INNER INSULATION AND THE TIP OF THE WIRE SHOWS AT THE LUG END. CRIMP THE LUG AND TRIM ANY EXCESS CENTER WIRE.

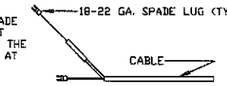

CALIBRATION PROCEDURE FOR ELECTRONICS UNIT

1. VERIFY THAT THE LIQUID IS NOT COVERING THE PROBE. THIS CAN BE DONE BY CHECKING THE READING ON THE TANK'S TAPE GAUGE. IF THE TANK IS LESS THAN FULL, THE PROBE WILL NOT BE IMMERSED IN LIQUID.

2. THE CALIBRATION SHOULD BE PERFORMED WITH ALL SYSTEM ELECTRICAL CONNECTIONS COMPLETE. ANY CHANGE IN ELECTRICAL CONNECTIONS AFTER CALIBRATION INVALIDATES THE CALIBRATION. NEATLY DRESS ALL WIRING. ALL SLACK IN THE WIRES SHOULD BE PUSHED DOWN INSIDE THE CONDULET, WITHOUT STRAINING THE WIRES. THIS PROTECTS THE WIRES FROM DAMAGE WHEN THE CAP OF THE CONDULET IS SCREWED ON. ALSO, IF THE WIRES ARE LYING TOO HIGH IN THE CONDULET, STRAY CAPACITANCE FROM THE METAL CAP CAN ALTER THE OPERATING POINT OF THE ELECTRONICS UNIT.

3. USING THE PLASTIC TUNING WRENCH SUPPLIED WITH THE ELECTRONICS UNIT, TURN THE TUNING CAPACITOR TO THE FULLY COUNTERCLOCKWISE POSITION. THEN SLOWLY TURN THE TUNING WRENCH CLOCKWISE UNTIL THE GREEN LIGHT ILLUMINATES. THIS IS THE OPERATING POINT OF THE SENSOR. IDENTIFY EXACTLY, THIS OPERATING POINT.

4. TO CHECK HYSTERESIS OF THE ELECTRONICS UNIT, TURN THE TUNING CAPACITOR COUNTER CLOCKWISE UNTIL THE GREEN LIGHT TURNS OFF. COUNTERCLOCKWISE TRAVEL SHOULD BE NO MORE THAN 1/8 TURN. IF HYSTERESIS IS GREATER THAN THIS, CONTACT ENGINEER.

5. RETURN THE TUNING CAPACITOR TO EXACTLY THE POSITION OF THE OPERATING POINT AND THEN TURN THE TUNING WRENCH CLOCKWISE EXACTLY ONE-HALF ADDITIONAL TURN (180 DEGREES). THE GREEN LIGHT SHOULD REMAIN ILLUMINATED. REMOVE THE TUNING WRENCH. CAREFULLY SCREW THE CAP ON THE CONDULET.

6. PROVIDE ENGINEER WITH WRITTEN VERIFICATION THAT CALIBRATION PROCEDURE WAS FOLLOWED; IDENTIFY THE TANK, DOCUMENT HYSTERESIS, NAME OF COMPANY AND INDIVIDUALTHAT PERFORMED PROCEDURE, AND DATE OF CALIBRATION.

7. TEST SYSTEM BY TOUCHING THE END OF HIGH LEVEL ALARM SENSING ELEMENT TO ENSURE ALARM SOUNDS AND VISUAL ALERT FLASHES. MAKE SECOND TEST BY PUSHING RELATED PUSH -TO-TEST BUTTON FOR ALARM AND VISUAL ALERT. PUSH SILENCE BUTTON TO RESTORE SYSTEM TO NORMAL.

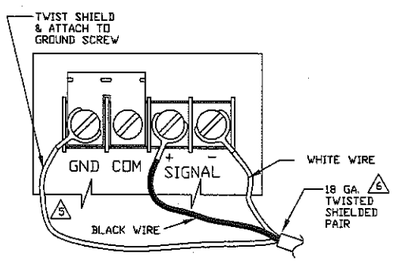

TERMINAL STRIP DETAIL #1

SCALE: NONE

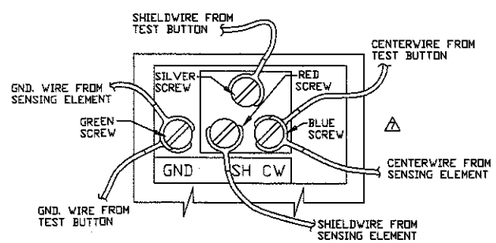

TERMINAL STRIP DETAIL #2

SCALE: NONE

FOR REFERENCE ONLY

GENERAL NOTES

THIS DRAWING CONTAINS INFORMATION PROPRIETARY TO SAFETY-KLEEN CORPORATION. ANY REPRODUCTION, DISCLOSURE OR USE OF THIS DRAWING IS EXPRESSLY PROHIBITED EXCEPT BY SAFETY-KLEEN OR AS SAFETY-KLEEN MAY AGREE IN WRITING.

1. USE PROPER INSULATED SPADE TERMINAL LUG TO MATCH CONDUCTOR SIZE & TERMINAL SCREW SIZE. F & I BY CONTRACTOR.

2. INSTALL STAR WASHERS ON EVERY TERMINAL SCREW AT LCT SENSING ELEMENT, LCT ELECTRONICS UNITS, AND PUSH-TO-TEST SWITCH. F & I BY CONTRACTOR.

3. SUPPLIED BY SAFETY-KLEEN.

4. NOT USED.

5. UNRAVEL METALIC BRAID FROM THE 2 INSULATED WIRES & SEPARATE TO A LENGTH OF ABOUT 3". TWIST BRAID & CRIMP ON AN 18-22 GA. TERMINAL SPADE LUG. TAPE BARE BRAID WITH ELECTRICAL TAPE TO PREVENT SHORTING SIGNAL LOOP WIRES. (USE 3M, 33+ OR EQUAL)

6. STRIP ABOUT 5/16 - 3/8" INSULATION OFF EACH WIRE. CRIMP AN 18-22 GA. TERMINAL SPADE LUG ON EACH.

7. SEE TEXT ON THIS DRAWING FOR CABLE TERMINATION PROCEDURE.

Project Solutions Companies
1390 Boone Industrial Drive • Suite 200 • Columbia • MO 65202
• Phone: (573) 443-7100 • Fax: (573) 443-7181 •

FIGURE D-26

NO.	DESCRIPTION	BY	CHK	APPR	DATE

REVISIONS

TITLE

L.C.T. ELECTRONIC CONTROL CABINET DETAILS

SAFETY-KLEEN CORP.
777 BIG TIMBER ROAD ELGIN, ILLINOIS 60123 PHONE 708-697-8460

SCALE	BY	CHKD	P.E. APPR	OP. APPR	DATE
AS SHOWN	PROJSOL	–	–	–	11-12-90

SERVICE CENTER STANDARDS	STD-DWG-REV NO.	SHEET NO.
PEKIN, IL	513601-4503-0	

11-14-90

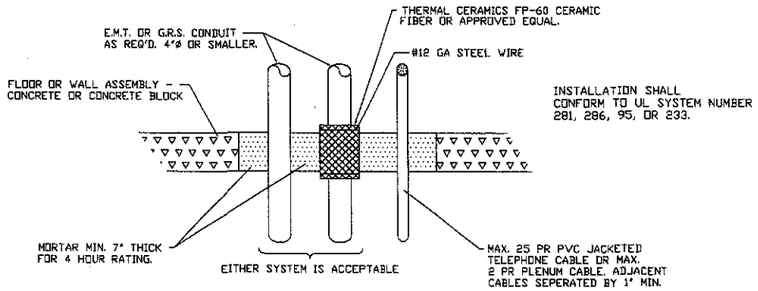

1/410 4 HOUR FIRE RATED WALL OR FLOOR PENETRATION

NO SCALE

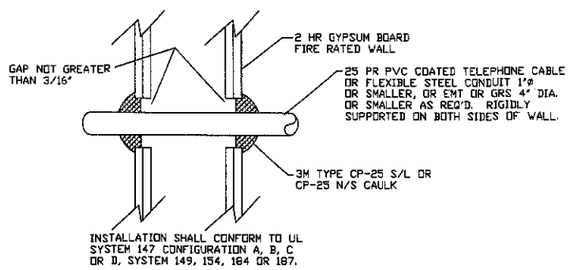

2/410 2 HOUR FIRE RATED WALL AND FLOOR PENETRATION

NO SCALE

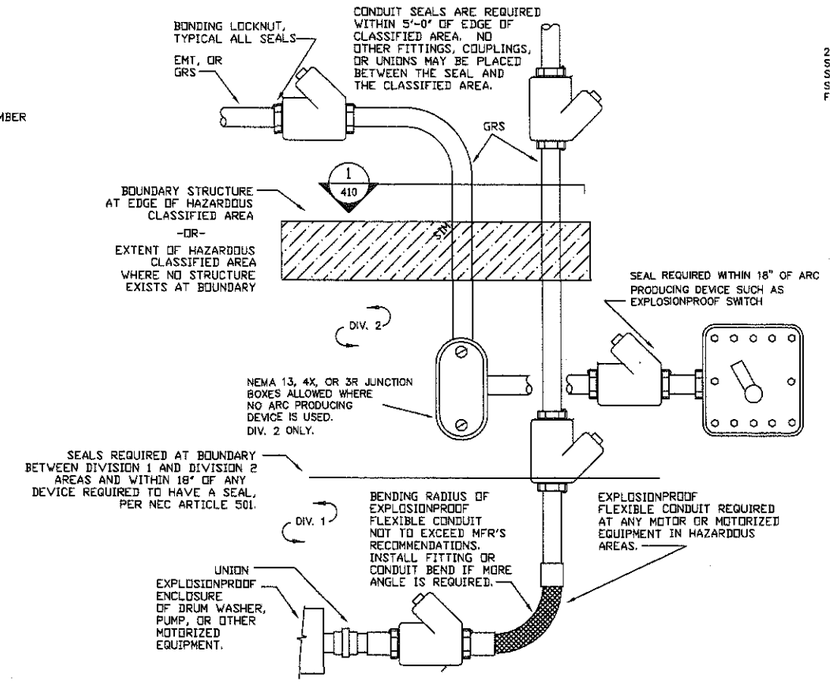

3/410 TYPICAL CONDUIT SEALS IN HAZARDOUS AREAS

NO SCALE

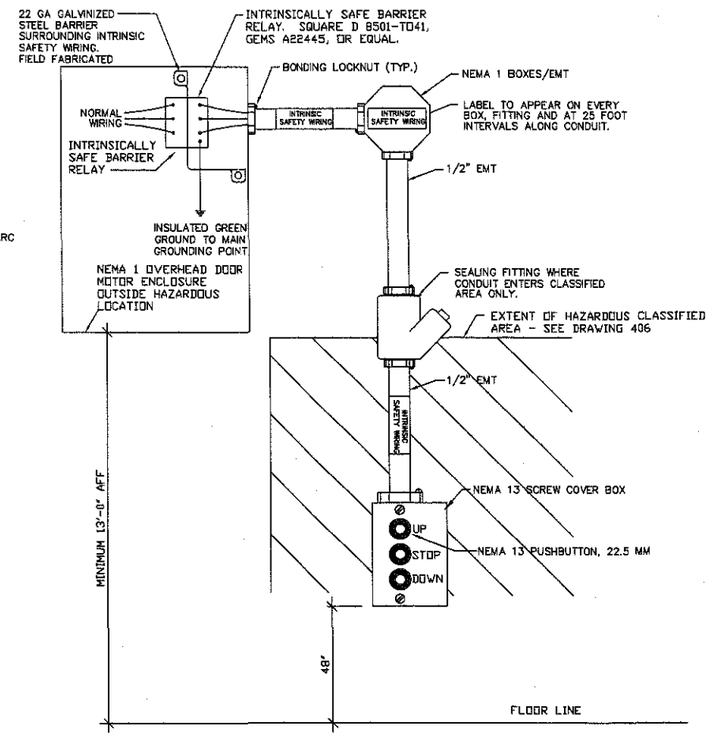

4/410 ELEVATION FOR OVERHEAD DOOR MOTORS AND CONTROLS

NO SCALE

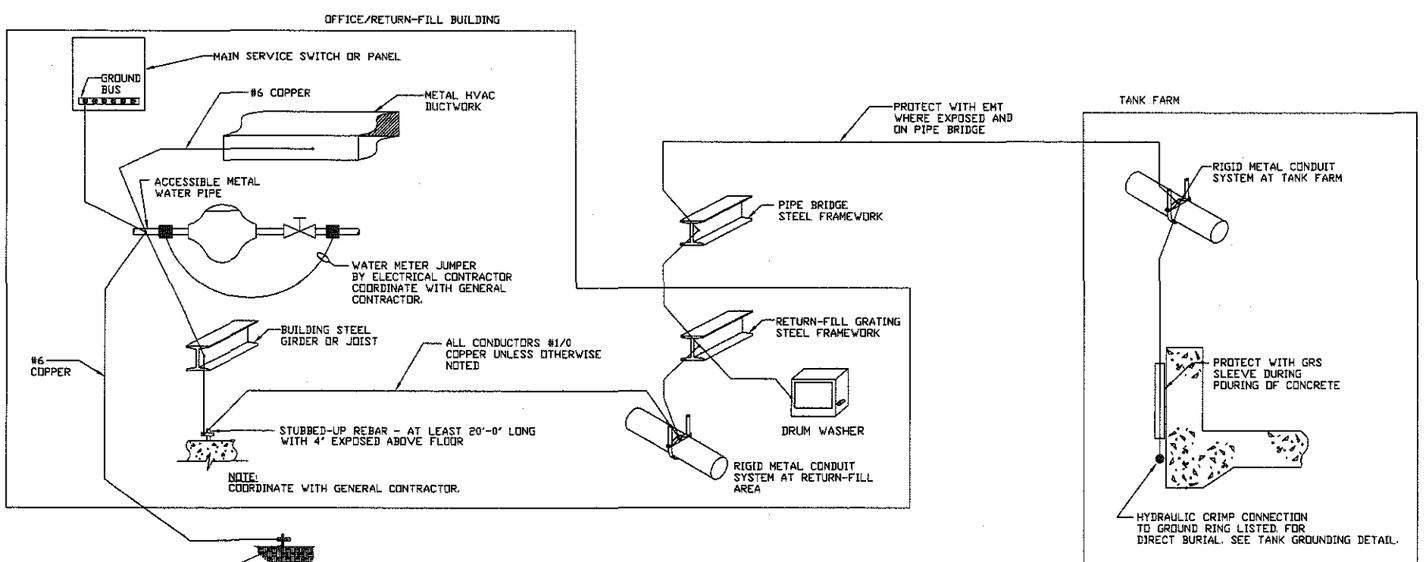

5/410 GROUNDING DETAILS

NO SCALE

GENERAL NOTES

THIS DRAWING CONTAINS INFORMATION PROPRIETARY TO SAFETY-KLEEN CORPORATION. ANY REPRODUCTION, DISCLOSURE OR USE OF THIS DRAWING IS EXPRESSLY PROHIBITED EXCEPT BY SAFETY-KLEEN OR AS SAFETY-KLEEN MAY AGREE IN WRITING.

QUESTEC CORPORATION
CONSULTING ENGINEERS
4812 Santana Circle • Columbia • MO 65203 • (314) 875-3290

FIGURE D-27

NO.	DESCRIPTION	BY	CHK	APPR	DATE

REVISIONS

TITLE

ELECTRICAL DETAILS

SAFETY-KLEEN CORP.
777 BIG TIMBER ROAD ELGIN, ILLINOIS 60123 PHONE 708-697-8460

SCALE	BY	CHKD	P.E. APPR	OP. APPR	DATE
AS SHOWN	QuesTec				7-1-92

SERVICE CENTER LOCATION	SC-DWG-REV NO.	SHEET NO.
STANDARD	2231-410-0	

8-14-92 3:05 PM 22314100.DWG

S-K #5213 PARTS LIST (1)			
QTY.	DESCRIPTION	MANUFACTURER	PART NUMBER
1	ENCLOSURE, NEMA 12	HOFFMAN	A-24SA2208LP
1	SUB-PANEL	"	A24P20
1	OPERATING HANDLE	A-B	1494 VH-1
1	DISCONNECT SWITCH	"	1494 V-DS60
1	ROD	"	1494 V-RA1
3	STARTER	"	509-AOXD
3	HEATER	"	W54
2	ILLUMINATED PUSHBUTTON	"	800T-PB16R
2	CONTACT BLOCK	"	800T-XA2
1	PILOT LIGHT, 120V	"	800T-P16R
3	PILOT LIGHT, 240V	"	800T-P26R
4	LENS CAP	"	800T-N26R
6	LEGEND PLATE	"	800T-X700
2	FUSE, 15A	FUSETRON	FRN15
2	FUSE, 5A	"	FRN5
2	FUSE, 30A	"	FRN30
1	TIMER	EAGLE	BR111A601
1	GROUND FAULT INTERRUPT	P & S	1591F
2	TOGGLE SWITCH	LEVITON	5226-1
2	COVER PLATE	APPLETON	2510
8	TERMINAL BLOCK	CURTIS	
1	FUSE BLOCK, 2-POLE	MARATHON	F30A2B
1	FUSE BLOCK-3 POLE	"	F30A3B
1	MICRO-SWITCH		BZ-2RQ13-A2
(3) 1	SEL. SWITCH, 4 POS., 4-POLE	A-B	800T-N17KF4DEEE
2	CONTACT BLOCK	"	800T-XA

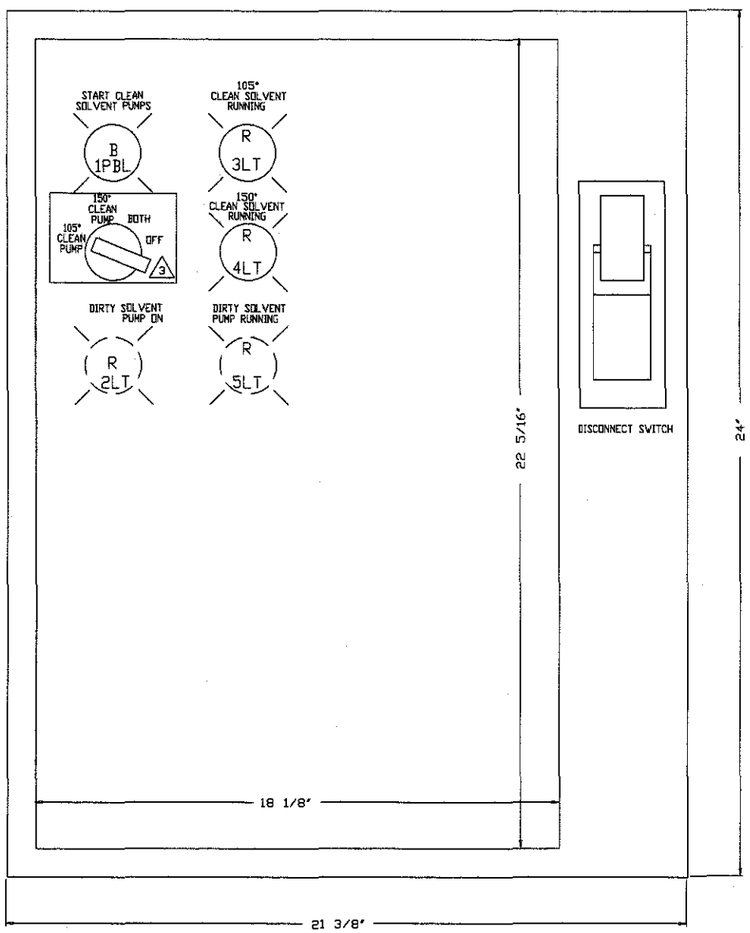

S-K #5213 CONTROL PANEL COVER
SCALE: NONE

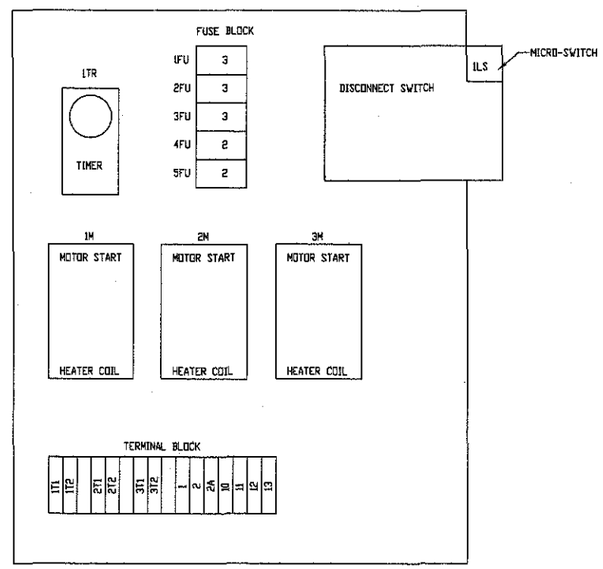

PANEL INTERNAL COMPONENT LAYOUT DETAIL
SCALE: NONE

FOR REFERENCE ONLY

GENERAL NOTES

1. S-K #5213 CONTROL PANEL COMES COMPLETELY ASSEMBLED. PARTS LIST IS FOR MAINTENANCE PURPOSES ONLY.
2. SEE DWG. NO. 412 FOR WIRING DETAILS AND SELECTOR SWITCH SEQUENCE.
3. DENOTES REVISIONS REQUIRED TO RUN TWO CLEAN SOLVENT PUMPS SIMULTANEOUSLY.

PROPRIETARY STATEMENT

THIS DRAWING IS THE EXCLUSIVE PROPERTY OF SAFETY-KLEEN CORP. AND IS PROPRIETARY AND CONFIDENTIAL INFORMATION. THIS DRAWING AND THE INFORMATION CONTAINED THEREIN MUST NOT BE DUPLICATED, USED, DIVULGED, REPRODUCED, COPIED, DISCLOSED OR APPROPRIATED IN WHOLE OR IN PART FOR ANY PURPOSE OTHER THAN AS EXPRESSLY AUTHORIZED BY SAFETY-KLEEN CORP. THIS DRAWING MUST BE RETURNED PROMPTLY UPON REQUEST.

Project Solutions Companies
1390 Boone Industrial Drive · Suite 200 · Columbia · MO 65202
· Phone: (573) 443-7100 · Fax: (573) 443-7181 ·

FIGURE D-28

TITLE
SK5213 PUMP CONTOL PANEL MODIFICATIONS

Safety-Kleen Corp.
1000 NORTH RANDALL ROAD ELGIN, ILLINOIS 60123
PHONE (708)697-8460

NO.	DESCRIPTION	BY	CHK	APPR	DATE
0	NEW RELEASE: MADE FROM QUESTEC DRAWING STD-458-0	MBH	KJM	DDD	051595

REVISIONS

SCALE	BY	CHKD	APPROVED	OPERATIONS	DATE
AS NOTED	MBH	KJM	DDD		05-15-95

SERVICE CENTER STANDARDS	STD-DWG NUMBER	REV. NO.
PEKIN, IL.	BSD-411	0

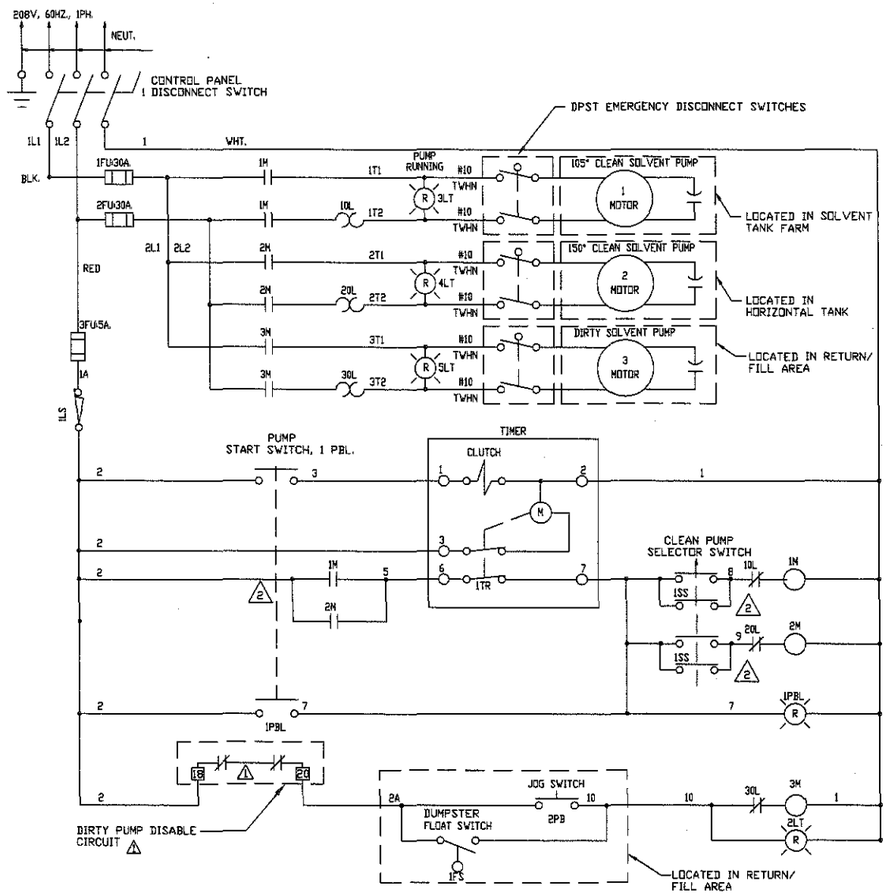

SK #5213 CONTROLS WIRING DIAGRAM

SCALE: NONE

SWITCH POSITION:	←	↖	↗	→
CONTACT:				
105° PUMP	CLOSED	OPEN	OPEN	OPEN
150° PUMP	OPEN	CLOSED	OPEN	OPEN
150° PUMP SECOND CONTACT	OPEN	OPEN	CLOSED	OPEN
150° PUMP SECOND CONTACT	OPEN	OPEN	CLOSED	OPEN

SELECTOR SWITCH SEQUENCE (2)

SCALE: NONE

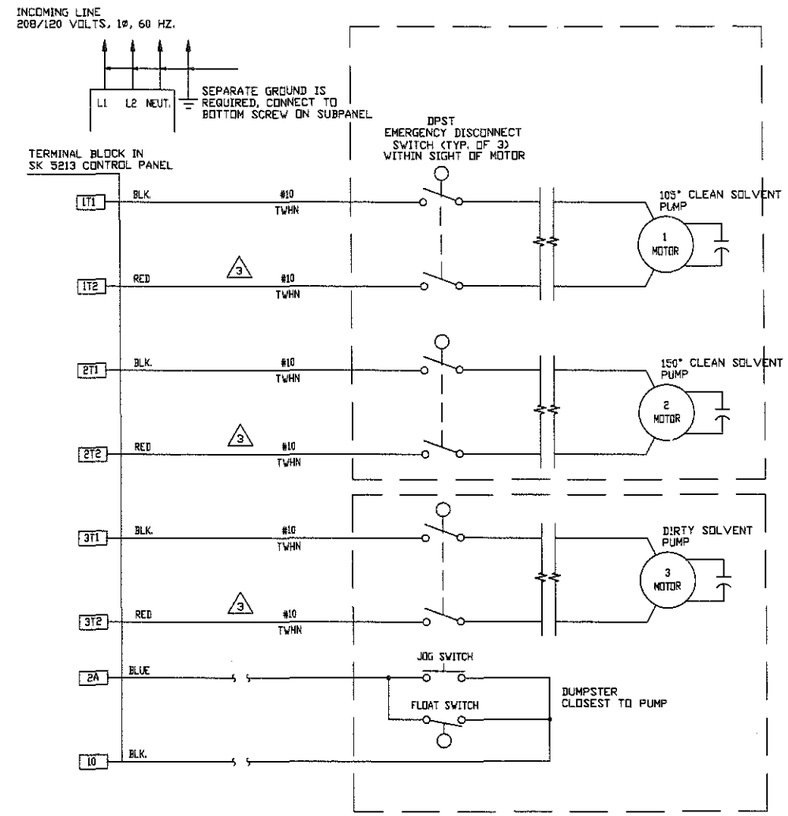

SOLVENT PUMPS & RETURN/FILL ELECTRICAL WIRING DIAGRAM

SCALE: NONE

FOR REFERENCE ONLY

GENERAL NOTES

1. ADD PUMP STOP SWITCH AND CHANGE CONTACT BLOCKS ON THREE POSITION SELECTOR SWITCH AS SHOWN.

(2) DENOTES REVISIONS REQUIRED TO RUN TWO CLEAN SOLVENT PUMPS SIMULTANEOUSLY.

(3) PULL 1-#10 CU THWN GND. WITH CIRCUIT.

PROPRIETARY STATEMENT

THIS DRAWING IS THE EXCLUSIVE PROPERTY OF SAFETY-KLEEN CORP. AND IS PROPRIETARY AND CONFIDENTIAL INFORMATION. THIS DRAWING AND THE INFORMATION CONTAINED THEREIN MUST NOT BE DUPLICATED, USED, DIVULGED, REPRODUCED, COPIED, DISCLOSED OR APPROPRIATED IN WHOLE OR IN PART FOR ANY PURPOSE OTHER THAN AS EXPRESSLY AUTHORIZED BY SAFETY-KLEEN CORP. THIS DRAWING MUST BE RETURNED PROMPTLY UPON REQUEST.

Project Solutions Companies
1390 Boone Industrial Drive • Suite 200 • Columbia • MO 65202
• Phone: (573) 443-7100 • Fax: (573) 443-7181 •

FIGURE D-29

TITLE
SK5213 PUMP CONTOL PANEL MODIFIED WIRING DIAGRAM

Safety-Kleen Corp.
1000 NORTH RANDALL ROAD ELGIN, ILLINOIS 60123
PHONE (708)697-8460

NO.	DESCRIPTION	BY	CHK	APPR	DATE
2	REVISED FOR NEW RETURN/FILL	JEK	GPM	GPM	021903
1	NEW RELEASE; MADE FROM QUESTEC DRAWING STD-459-0	MBH	KJM	DDO	051595

REVISIONS

SCALE	BY	CHKD	APPROVED	OPERATIONS	DATE
AS NOTED	MBH	KJM	DDO		05-15-95

SERVICE CENTER STANDARDS	STD-DWG NUMBER	REV. NO.
PEKIN, IL.	BSD-412	1

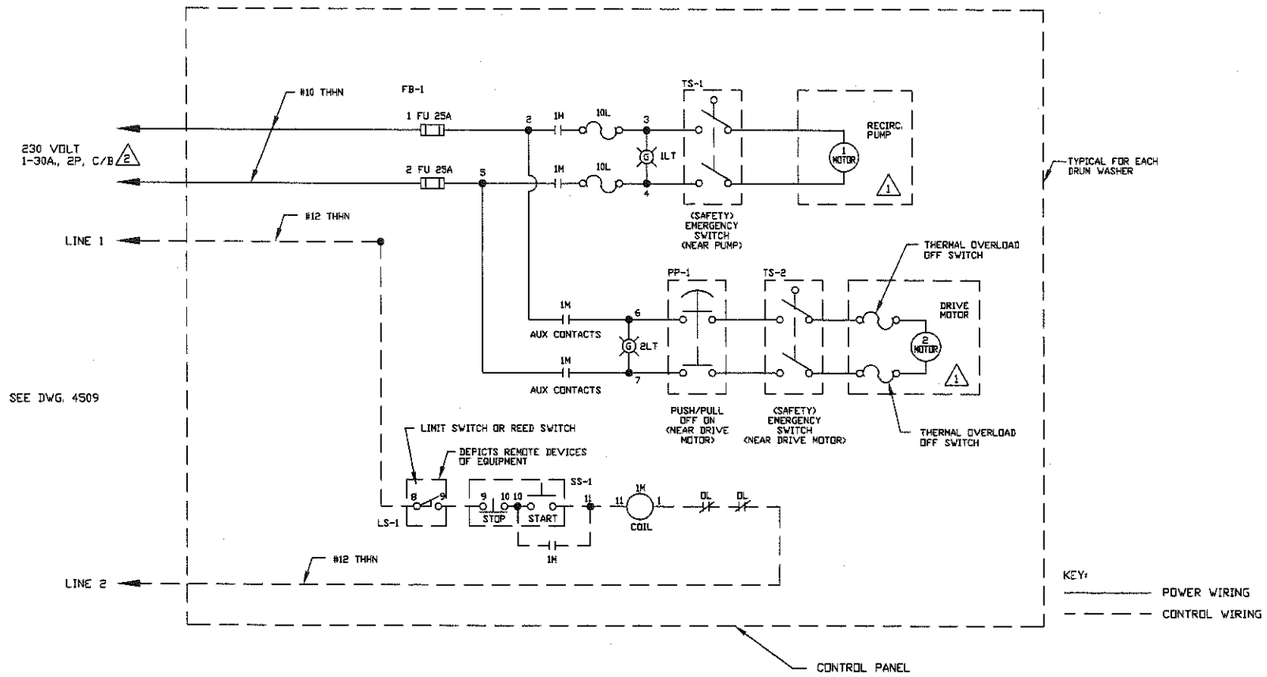

"PANEL WIRING" & ELEMENTARY DIAGRAM

SCALE: NONE

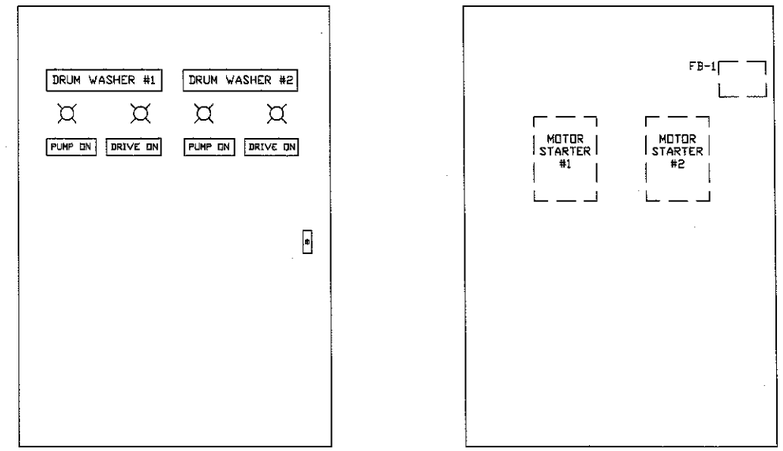

CONTROL PANEL MAKE-UP

SCALE: NONE

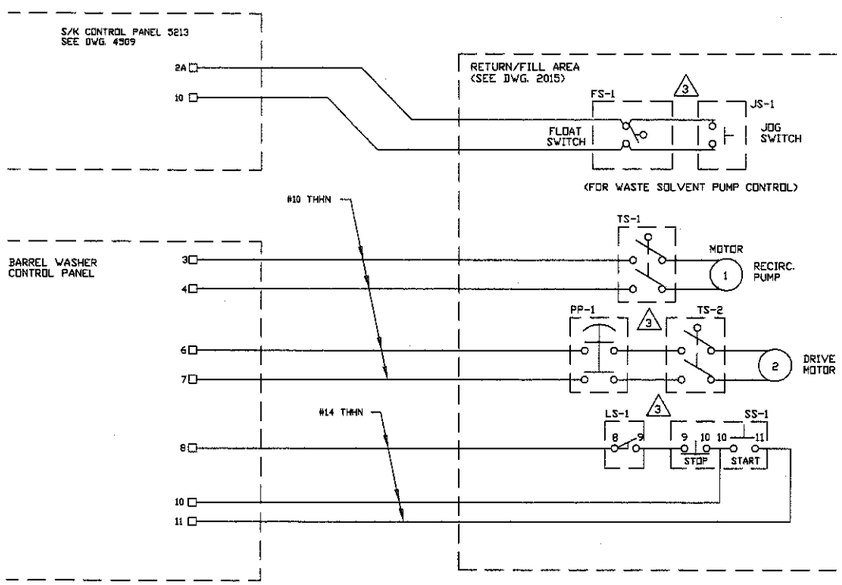

WIRING DIAGRAM FOR ONE DRUM WASHER

SCALE: NONE

MATERIALS LIST (1)

TAG	QUANTITY	DESCRIPTION
FB-1	1	FUSE BLOCK WITH FRN FUSES LITTLE FUSE LH 250 30 2P FUSES FLNR 25
STARTER	2	NEMA SIZE #1 MAGNETIC STARTER SQ D 8536-SBD IS
1LT	2	PUMP PILOT LIGHT - GREEN -240 VOLT SQ D 9001 KP7R9 W/ TRANSFORMER
2LT	2	DRIVE MOTOR PILOT - GREEN - 240 VOLT SQ D 9001 KP7R9 W/ TRANSFORMER
PANEL	1	UNIVERSAL BOX WITH PIANO HINGE, SINGLE POINT L HANDLE LOCK, 6" DEEP, 36" HIGH, 24" WIDE.
		REMOTE ITEMS
SS-1	1	START-STOP STATION 9001 BR205
TS-1,2	2	2-POLE TOGGLE SWITCH, 20A RATED SQ D 2510 KRI
JS-1	1	JOG SWITCH, 1-POLE, 20A RATED
FS-1	1	FLOAT SWITCH, 1-POLE, 20A RATED
LS-1	1	LIMIT SWITCH OR REED SWITCH MAKES WHEN BARREL IS IN PLACE. 9008 CL61J
PP-1	1	2 POLE PUSH/PULL SWITCH, START STOP STATION. 2 HP RATING.

FOR REFERENCE ONLY

GENERAL NOTES

THIS DRAWING CONTAINS INFORMATION PROPRIETARY TO SAFETY-KLEEN CORPORATION. ANY REPRODUCTION, DISCLOSURE OR USE OF THIS DRAWING IS EXPRESSLY PROHIBITED EXCEPT BY SAFETY-KLEEN OR AS SAFETY-KLEEN MAY AGREE IN WRITING.

(1) ITEMS SUPPLIED BY SAFETY-KLEEN. DRUM WASHER CONTROL PANEL COMES COMPLETELY ASSEMBLED.

(2) SEE DWG. 4250, ELECTRICAL PANEL BOARD SCHEDULES, FOR CIRCUIT BREAKER DESIGNATIONS.

(3) JS-1, TS-1, PP-1 AND TS-2 TO BE MOUNTED BY ELECTRICAL CONTRACTOR. LS-1 AND SS-1 ARE PREMOUNTED ON DRUM WASHER HOUSING.

Project Solutions Companies
1390 Boone Industrial Drive • Suite 200 • Columbia • MO 65202
• Phone: (573) 443-7100 • Fax: (573) 443-7181 •

FIGURE D-30

TITLE
DRUM WASHER CONTROL PANEL DIAGRAMS

SAFETY-KLEEN CORP.
1301 GERVAIS STREET COLUMBIA, SC 29201 PHONE 803-933-4200

NO.	DESCRIPTION	BY	CHK	APPR	DATE
1	ISSUED FOR STANDARD	JKM	–	–	041902

REVISIONS

SCALE	BY	CHKD	P.E. APPR	OP. APPR	DATE
AS SHOWN	JKM	BC	–	–	4-19-02

SERVICE CENTER LOCATION	SC-DWG NUMBER	REV. NO.
PEKIN, IL.	BSD-414	1

MM-DD-YY HH:MMam IE

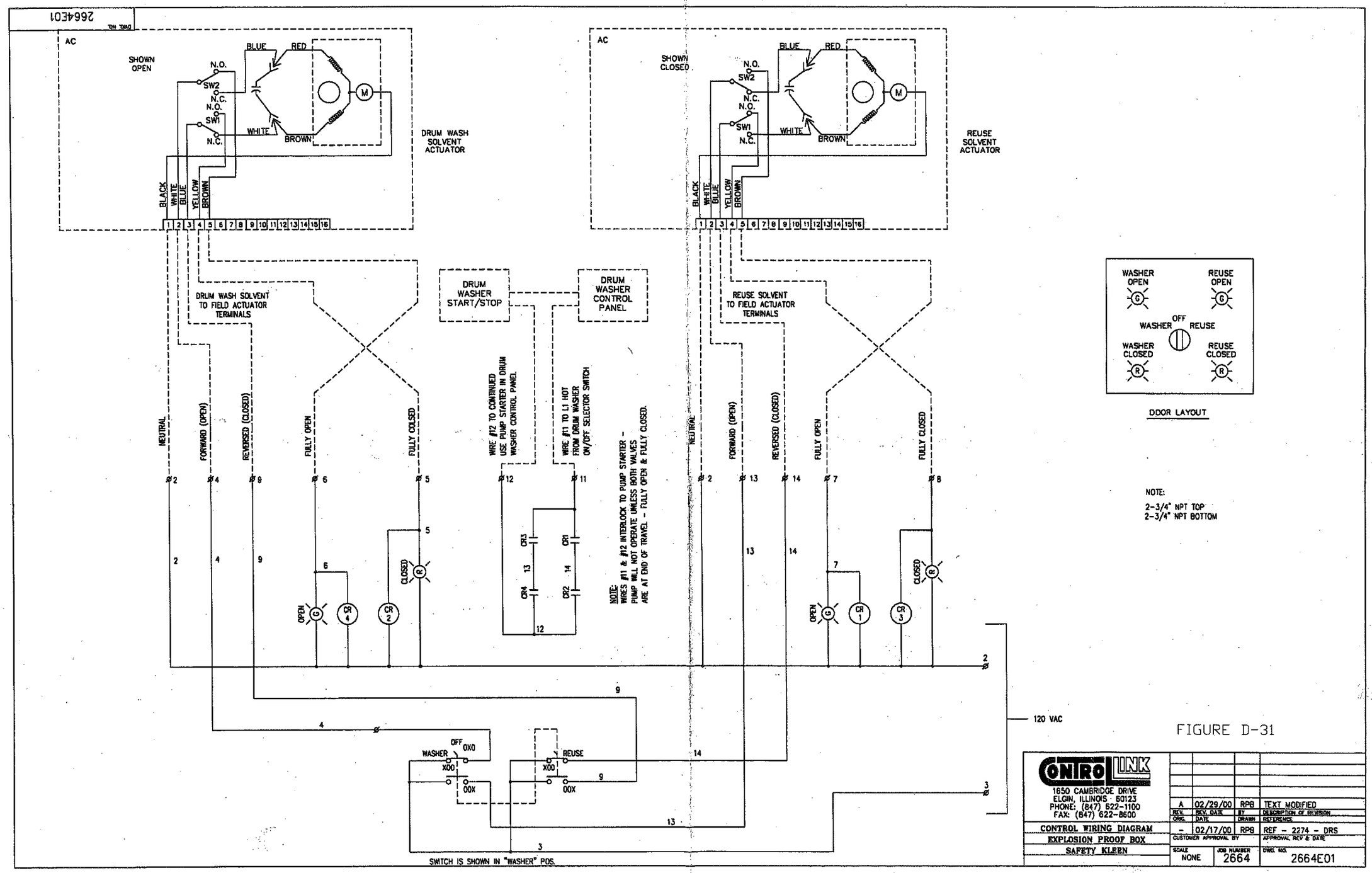

Fri Mar 24 09:45:13 2000 : Time Plotted : By RPB : Controllink

Figure D-32
Typical Pallet Configuration for 30-Gallon Drum

TOP VIEW

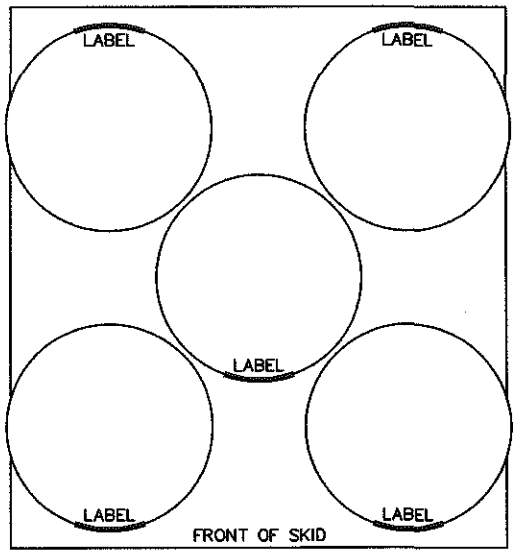

FRONT VIEW

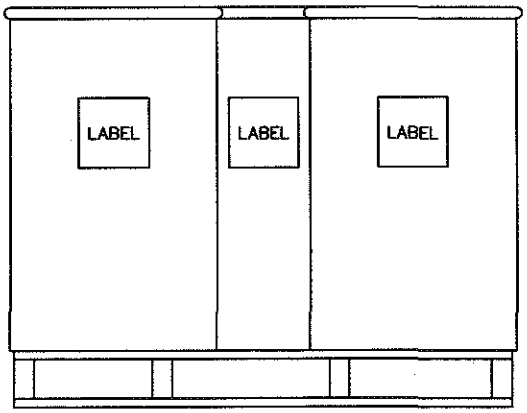

TYPICAL PALLET CONFIGURATION FOR 30-GALLON DRUM

SCALE: 3/4"=1'-0"

DRAWN BY: HB
DATE : 8-26-92
CHECKED BY GPM
DATE : 8-26-92

QUESTEC CORPORATION
CONSULTING ENGINEERS
4812 Santana Circle • Columbia • MO 65203 • (314) 875-0260

FIGURE D-32

Figure D-33
Typical Pallet Configuration for 16-Gallon Drum

TOP VIEW

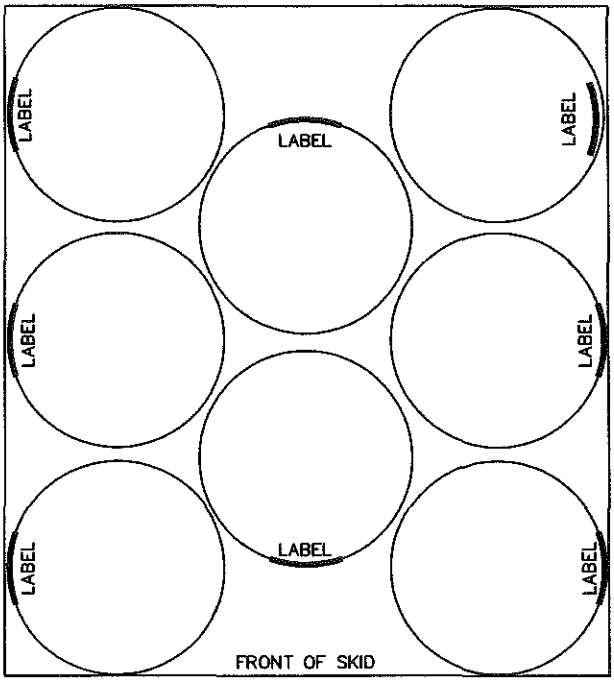

FRONT VIEW

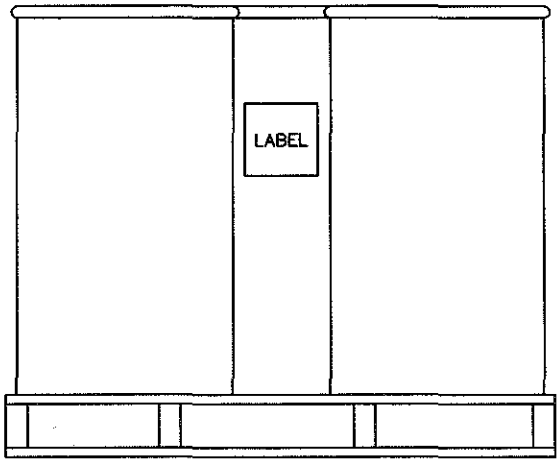

1 REVISED 5-6-93

TYPICAL PALLET CONFIGURATION FOR 16-GALLON DRUM

SCALE: 3/4"=1'-0"
DRAWN BY: HB
DATE : 8-26-92
CHECKED BY: PM
DATE : 8-26-92

QUESTEC CORPORATION
CONSULTING ENGINEERS
4812 Santana Circle • Columbia • MO 65203 • (314) 875-0260

FIGURE D-33

Figure D-34
Typical Pallet Configuration for 16-Gallons Split Drum

TOP VIEW

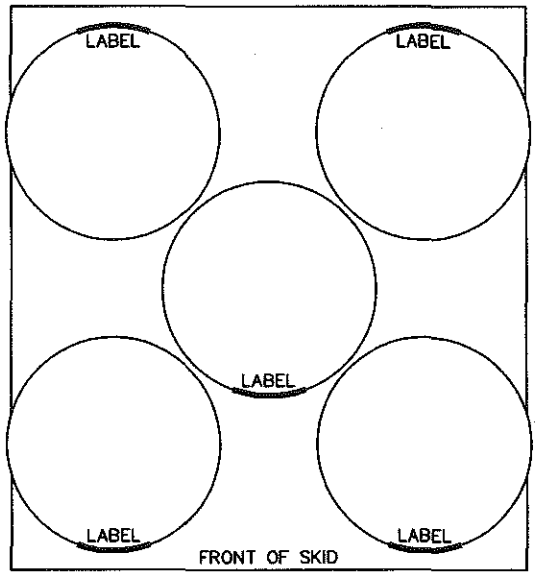

FRONT VIEW

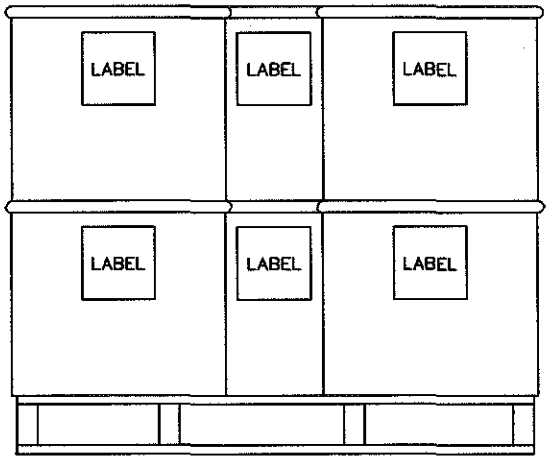

1 REVISED 5-6-93

TYPICAL PALLET CONFIGURATION FOR 16-GALLON SPLIT DRUM

SCALE: 3/4"=1'-0"
DRAWN BY: HB
DATE : 8-26-92
CHECKED BY GPM
DATE : 8-26-92

QUESTEC CORPORATION
CONSULTING ENGINEERS
4812 Santana Circle • Columbia • MO 65203 • (314) 875-0260

FIGURE D-34

Figure D-35
Typical Pallet Configuration for 5-Gallon Drum

TOP VIEW

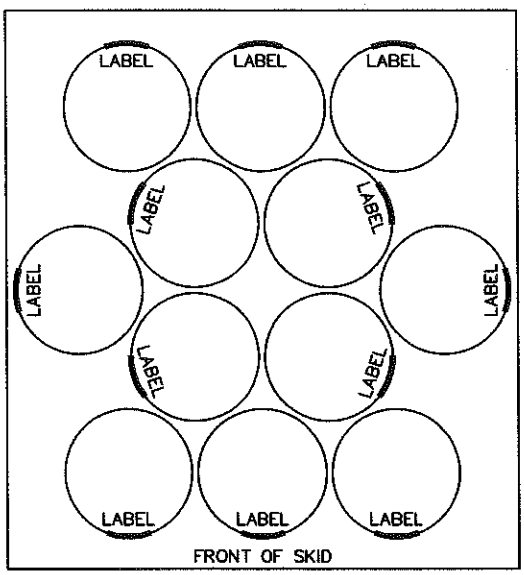

FRONT VIEW

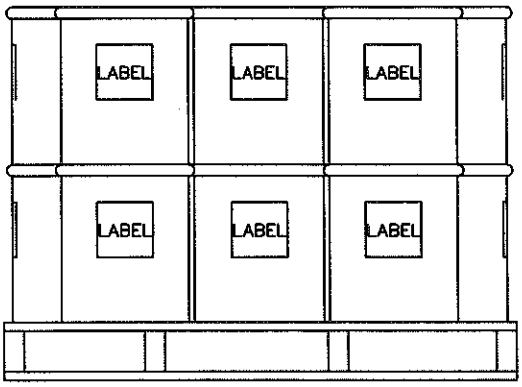

1 REVISED 5-6-93

TYPICAL PALLET CONFIGURATION FOR 5-GALLON DRUM

SCALE: 3/4"=1'-0"
DRAWN BY: HB
DATE : 8-26-92
CHECKED BY: GPM
DATE : 8-26-92

QUESTEC CORPORATION
CONSULTING ENGINEERS
4812 Santana Circle • Columbia • MO 65203 • (314) 875-0260

FIGURE D-35

APPENDIX E
ENGINEERING INFORMATION

Exhibit E-1
Engineering Assessment of the Container Storage Area

TriHydro Corporation

920 Sheridan Street
Laramie, Wyoming 82070

(307) 745-7474
FAX: (307) 745-7729

April 28, 2003

Mr. Kevin Farmer
EHS Manager
Safety-Kleen Systems, Inc.
201 LaSalle St.
Cape Girardeau, MO 63701

Re: Condition Assessment, Proposed Return and Fill Station and Container Storage Area, Safety-Kleen Systems, Inc. Service Center, Pekin, IL (ILD093862811)

Dear Mr. Farmer:

On April 10, 2003, TriHydro Corporation performed a condition assessment of the proposed return/fill station and container storage area (CSA) at the Safety-Kleen Systems, Inc. (S-K) Service Center, 14249 VFW Road, Pekin, Illinois. The assessment was performed to support the submittal of a Class 2 Permit Modification and Part B Renewal Application to add the return and fill station and container storage area to the existing Part B Permit

This letter-report documents the results of the condition assessment. In general, the scope of work for the condition assessment included:

1. Visual inspection of the proposed return/fill station;

2. A visual inspection of the proposed CSA and secondary containment areas; and

3. Documenting the condition of the proposed return/fill station area and CSA with field notes and photographs.

Summary of Condition Assessment

The assessment of the proposed return/fill area and the proposed CSA were conducted by registered Illinois Professional Engineer on April 10, 2003. In general, the assessment consisted of visual inspection and field verification of engineering drawings and details. Photographs documenting the results of the April 10, 2003 assessment are presented in Appendix A of the Part B Permit Renewal Application.

Description of the Proposed CSA and Return/Fill Station

A site plan showing the location of the proposed CSA and return/fill station area is provided in Appendix B of the Part B Permit Renewal Application. Engineering drawings and containment calculations fro these areas are provided in appendices D and E, respectively. According to S-K personnel, the warehouse that includes the proposed return/fill station area and container storage area was built in approximately 1993.

The proposed CSA is located in the southeast portion of the warehouse office building. According to S-K, the proposed CSA area has been used to date primarily for product and machine/equipment storage. The CSA consists of a concrete slab (approximately 57' x 48' in dimension) with nominal 4-inch high perimeter diking around the perimeter of the proposed CSA (with the exception of the doorways) and a steel-lined containment trench (~12' X 2' X 2.5' deep), located in the center of the floor.

The floor, which slopes gently toward the trench, and diking are coated with a gray epoxy sealant. The coating/sealant appeared to be in relatively good condition at the time of this inspection. Some abraded areas were noted on the seams over the joints, but no areas appeared to be penetrating through to the concrete. The sump contained some dirt and sediment, but no free liquids. The observable seams of the proposed CSA containment trench appeared intact.

The enclosed return/fill station is located in the southwest portion of the warehouse, just west of the proposed container storage area. On the date of the inspection, equipment and piping to the waste parts washer solvent storage tank were not installed in the proposed return/fill station area. The return/fill station area is surrounded by 4-inch high concrete curbing around the perimeter, except at the doorways. The concrete floor and curbing is coated with light-gray/tan epoxy sealant with reinforced seams/joints. The concrete floor traffic-way in front of the northern-most overhead door was coated with gray textured epoxy sealant. The floor sealants were noted to be in relatively good condition at the time of the inspection.

The floor slopes gently toward a secondary containment sump in the center of the area. A steel-lined sump with surface grating is located in the center of the return/fill station area. All observable seams appeared intact. The sump contained some dirt and sediment, but no liquids.

Conclusions of Condition Assessment

The visual inspection was conducted to document the existing condition of the proposed CSA and return/fill station areas in support of the Class 2 Permit Modification and Part B Permit Renewal Application. Based on the results of the April 10, 2003 assessment, the proposed CSA and return/fill station area appear to be of sound integrity. The sealant/coatings over the concrete floor and diking/curbing appeared to be in relatively good condition and capable of retaining leaks/spills.

Re-coating/sealing of the floor and dikes/curbing areas do not appear necessary at this time. However, these areas and the containment trenches should be re-inspected prior to placing the units in service. In addition, TriHydro Corporation recommends the following:

1. Continue to inspect/identify and repair or patch crack/gaps or deteriorated areas in CSA and return/fill station area on a regular basis.

2. Conduct an additional engineering assessment of the return/fill station following installation of the equipment and piping, including testing the alarms, detectors and the fire suppression systems.

If you have any questions regarding this condition assessment or the recommendations provided above, please feel free to contact me at (307) 745-7474.

Certification

I, Jack Bedessem, have conducted the condition assessment described in this letter report. My duties included coordinating and performing the inspection, collecting measurements, assessing the results of the inspection, technical review, and overseeing the preparation of this letter-report.

I certify under penalty of law that I have personally examined and am familiar with the information submitted in this document and all attachments and that, based on my inquiry of those individuals immediately responsible for obtaining the information, I believe that the information is true, accurate, and complete. I am aware that there are significant penalties for submitting false information including the possibility of fine and imprisonment.

Sincerely,
TRIHYDRO CORPORATION

Jack Bedessem, P.E.
Vice President
Illinois Professional Engineer – #062-049091

044-007

Enclosures

LICENSED PROFESSIONAL ENGINEER
JACK G. BEDESSEM
062-049091
STATE OF ILLINOIS

signature

4/28/03
date

Exhibit E-2
Engineering Assessment of the Flammable Storage Shelter

PRC Environmental Management, Inc.
233 North Michigan Avenue
Suite 1621
Chicago, IL 60601
312-856-8700
Fax 312-938-0118

PRC

October 18, 1991

Ms. Anita Pendry
Environmental Permits Writer
Safety-Kleen Corporation
777 Big Timber Road
Elgin, Illinois 60123

Re: Pekin, Illinois, Service Center
Flammable Waste Storage Shelter and Container Storage Area Engineering Assessment

Dear Ms. Pendry:

PRC Environmental Management, Inc. (PRC), conducted an inspection on September 11, 1991, of the flammable waste storage shelter and container storage area at the Safety-Kleen Corporation (Safety-Kleen) Service Center in Pekin, Illinois. PRC certifies that portions of the design of the containment systems are in compliance with the requirements of Title 35, Illinois Administrative Code (IAC) Section 724.275.

The following engineering assessment addresses the flammable waste storage shelter and container storage area secondary containment systems.

SERVICE CENTER FLAMMABLE WASTE STORAGE SHELTER

The Service Center flammable waste storage shelter is described and its secondary containment system is assessed below.

Description

The flammable waste storage shelter is shown in Figure 1. It occupies about 300 square feet at the south end of the Service Center property. The dimensions of the shelter are about 15 by 20 feet. The flammable waste storage shelter is more than 50 feet from the property line. The flammable waste storage shelter is used to store paint waste in 16-gallon, steel drums and in 5-gallon, steel pails. All drums are stored on pallets.

Pallets in the flammable waste storage shelter rest on a metal grate that is supported about 2.4 feet above ground level. At ground level, the entire area beneath the grate is occupied by six

metal containment pans. Each pan measures 10 feet long by 5 feet wide (outside dimensions). The depth of each pan is 5-1/2 inches at the mating side of the pan and 6 inches at the opposite side. The pans are constructed of 3/16-inch, carbon-steel plate. Typical fabrication details for the pans are shown in Figure 2.

<u>35 IAC 724.275 Containment</u> - Design and Operation of the Service Center Flammable Waste Storage Shelter

1. Condition of base of containment -- 724.275(b)(1)

   The base of the containment consists of the metal pans, which were coated with a rust preventative after their construction. To prevent possible seepage between pans, Safety-Kleen will install metal clips over the adjacent lengths of the pans by the end of 1991.

2. Protection of containers from leaks and spills -- 724.275(b)(2)

   All drums are stored on pallets. The pallets rest on a metal grate that is 1.9 feet above the top of the containment pans. Therefore, any spilled material cannot come in contact with the drums.

3. Secondary containment requirements -- 724.275(b)(3)

   The secondary containment system consists of six 9.63-foot long by 4.63-foot wide by 0.46-foot deep (inside measurements) metal containment pans with a total capacity of 920.5 gallons (see Attachment A). The permitted hazardous waste storage capacity for the flammable waste storage shelter is 2,184 gallons. Therefore, the secondary containment system has sufficient capacity to contain the required 10 percent of the total volume of the containers. The maximum volume of liquid waste and product that can be stored in the flammable waste storage shelter area is 9,205 gallons.

4. Runon prevention -- 724.275(b)(4)

   Runon into the containment system is prevented by the flammable waste storage shelter building that encloses the system.

SERVICE CENTER CONTAINER STORAGE AREA

The Service Center container storage area is described and its secondary containment system is assessed below.

Description

The container storage area is shown in Figure 1. It occupies about 444 square feet in the Service Center warehouse building. The dimensions of the area are about 29.4 by 15.1 feet. A straight line has been painted across the container storage area floor to designate where ignitable wastes (dumpster sediment) can be stored. This line represents a distance of 50 feet from the western property line; ignitable wastes can be stored east of this line in the container storage area. The line begins at the northern end of the container storage area (11 feet from the western wall of the container storage area) and terminates at the southern end (21.4 feet from the western wall). This line is shown in Figures 1 and 3.

The container storage area is used to store the following materials: (1) spent immersion cleaner (in 16-gallon, steel drums); (2) mineral spirits dumpster sediment, an ignitable waste (in 16- and 30-gallon, steel drums); (3) dry cleaning waste (in 16-gallon, polyethylene containers and in 16-gallon or split 30-gallon, steel drums); and (4) spent antifreeze (in 55-gallon, steel drums). All drums are stored on pallets.

The container storage area has a trench, covered by a metal grate, in the center. The floor where the pallets rest slopes downward from the walls toward the trench. The walls of the trench are made of concrete block; they were plastered, grouted, and novolac epoxy-coated. The floor of the trench is made of poured concrete. The trench detail is shown in Figure 3.

35 IAC 724.275 Containment - Design and Operation of the Service Center Container Storage Area

1. Condition of base of containment -- 724.275(b)(1)

The base (floor) and collection trench are made of concrete. The base is coated with an

oxy sealant and the trench is coated with a novolac epoxy sealant (see Attachments B d C). No cracks or gaps exist in the concrete.

i in

otection of containers from leaks and spills -- 724.275(b)(2)

ll drums are stored on pallets. Therefore, spilled material cannot come in contact with e drums. The floor where the pallets rest slopes downward from the walls toward the ench. Because of this design, any spilled liquids would drain toward the secondary ntainment and away from the pallets and drums.

econdary containment requirements -- 724.275(b)(3)

he secondary containment system consists of a 22.08-foot long by 3.29-foot wide by 4-ot deep, grated containment trench with a total capacity of 2,173.5 gallons (see ttachment D). The sloped floor that surrounds the trench provides minimal additional econdary containment. The permitted hazardous waste storage capacity for the ammable waste storage shelter is 4,728 gallons. Therefore, the secondary containment stem has sufficient capacity to contain the required 10 percent of the total volume of e containers. The maximum volume of liquid waste and product that can be stored in e container storage area is 21,735 gallons.

ent
which
y duty
r

n this
rue,

unon prevention -- 724.275(b)(4)

Iost runon into the containment system is prevented by the warehouse building that ncloses the system; however, an overhead door on the east wall of the warehouse urrently does not close tightly. Safety-Kleen will provide means to prevent runon from ntering the system by the end of 1991.

JSION

lased on the engineering assessment provided above, portions of the existing secondary ent systems for the Service Center flammable waste storage shelter and container storage in compliance with 35 IAC 724.275. Safety-Kleen will be in total compliance with the ns when the planned work on the storage shelter containment pans and the storage area

Exhibit E-3
Secondary Containment Calculations;
Container Storage Area
Return and Fill Area
Flammable Storage Area

Solutions Companies
1390 Boone Industrial Drive · Suite 200 · Columbia · MO 65202
· Phone (573) 443-7100 · Fax (573) 443-7101 ·

Client SAFETY KLEEN CORP. Pg. 1 of 3

Project No. 9341.19 Date 7-22-93

Project Title PEKIN, IL. – CONTAINMENT CALCS.

Subject CONTAINER STORAGE AREA

Designer CWM Ck By HB Prelim ____ Final SD

SECONDARY CONTAINMENT CALCULATIONS

CONTAINER STORAGE AREA

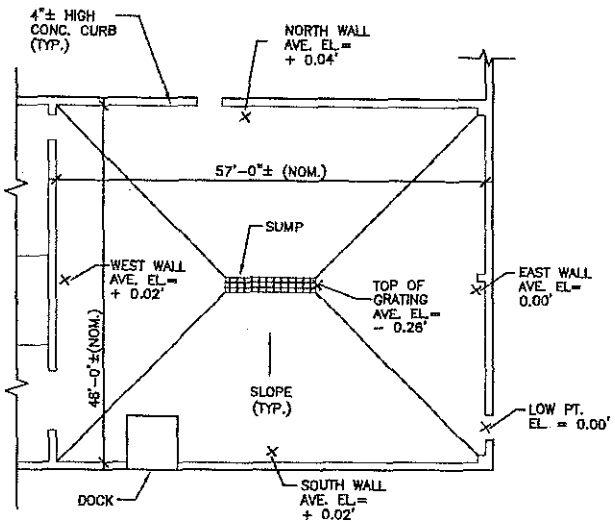

NOMINAL 57'-0"± LONG x 48'-0"± WIDE CONTAINER STORAGE AREA WITH EPOXY COATED SLOPED, CONC. FLOOR AND 4"± HIGH EPOXY COATED CONC. CURB AT PERIMETER, AND A 12'-0"± LONG x 2'-0"± WIDE STAINLESS STEEL LINED FLOOR SUMP WITH DEPTH VARYING FROM 2'-2"± TO 2'-8"±.

REF: DRAWING NO. MF06-511-0

REF: AS-BUILT FLOOR ELEVS. SURVEY BY R.A.N. CONSULTANTS, INC. DATED 7-12-93

CONTAINMENT PROVIDED BY SLOPED FLOOR AREA AND SUMP.

NORTH

PLAN VIEW

NO SCALE

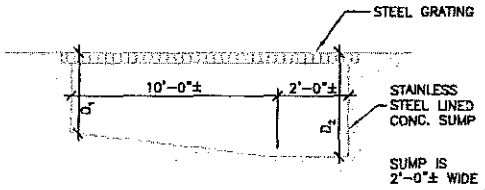

TYP. SUMP SECTION

NO SCALE

SUMP VOLUME

SUMP VOLUME = $[(L_1 \times W \times D_{AVE.}) + (L_2 \times W \times D_2)] \times 7.48$ GAL/CF

USE MIN. L,W,&D DIMENSIONS (CONSERVATIVE), $D_{AVE.} = (D_1 + D_2)/2$

SUMP VOLUME = [(10'-0" x 2'-0" x (2'-2" + 2'-8")/2) + (2'-0" x 2'-0" x 2'-8")] x (7.48 GAL/CF)

= [(10.00' x 2.00' x 2.42') + (2.00' x 2.00' x 2.67')] x (7.48 GAL/CF)

= (48.40 CF + 10.68 CF) x (7.48 GAL/CF)

= 442 GAL

Solutions
Companies
1360 Boone Industrial Drive · Suite 200 · Columbia · MO 65202
· Phone: (573) 443-7100 · Fax: (573) 443-7181 ·

Client [illegible] Pg. 2 of [illegible]

Project No. 9341.19 Date 7-22-93

Project Title PEKIN, IL. – CONTAINMENT CALCS.

Subject CONTAINER STORAGE AREA

Designer CWM Cx By HB Prelim ____ Final SD

NOTE: THE DOOR OPENING IN THE SOUTHEAST CORNER IS THE LOW POINT ON THE PERIMETER. FLUID REACHING THIS POINT MAY FLOW OUT OF CONTAINMENT. THEREFORE, THE OVERALL FLOOR AREA AVAILABLE FOR CONTAINMENT MUST BE REDUCED TO REPRESENT ONLY THE FLOOR AREA FLUID WILL COVER WHEN IT REACHES THE LOW POINT ON THE PERIMETER.

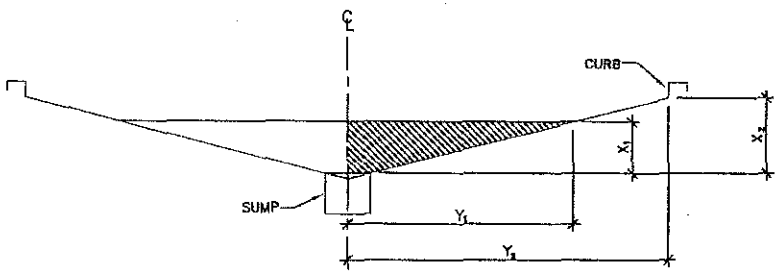

TYP. SECTION
NO SCALE

Y_1 = HORIZONTAL DISTANCE FLUID WILL FILL (UP TO LOW POINT)

Y_2 = HORIZONTAL DISTANCE (℄ SUMP TO BASE OF CURB)

X_1 = VERTICAL DISTANCE FLUID WILL FILL (UP TO LOW POINT)

X_2 = VERTICAL DISTANCE (TOP OF SUMP TO BASE OF CURB)

WEST WALL

$Y_2 = 28.50'$

$X_2 = 0.26' + 0.02' = 0.28'$

$\frac{X_1}{X_2} = \frac{Y_1}{Y_2} = \frac{0.26'}{0.28'} = \frac{Y_1}{28.5'}$

$\therefore Y_1 = 26.46'$

NORTH WALL

$Y_2 = 23.97'$

$X_2 = 0.26' + 0.04' = 0.30'$

$\frac{X_1}{X_2} = \frac{Y_1}{Y_2} = \frac{0.26'}{0.30'} = \frac{Y_1}{23.97'}$

$\therefore Y_1 = 20.77'$

EAST WALL

$X_1 = X_2 = 0.26'$

$\therefore Y_1 = Y_2 = 28.50'$

SOUTH WALL

$Y_2 = 23.95'$

$X_2 = 0.26' + 0.02' = 0.28'$

$\frac{X_1}{X_2} = \frac{Y_1}{Y_2} = \frac{0.26'}{0.28'} = \frac{Y_1}{23.95'}$

$\therefore Y_1 = 22.24'$

Solutions Companies
1390 Boone Industrial Drive • Suite 200 • Columbia • MO 65202
• Phone (573) 443-7100 • Fax (573) 443-7181 •

Client SAFETY-KLEEN CORP. Pg. 3 of 5

Project No. 9341.19 Date 7-22-93

Project Title PEKIN, IL. – CONTAINMENT CALCS.

Subject CONTAINER STORAGE AREA

Designer CWM Cx By HB Prelim ____ Final SD

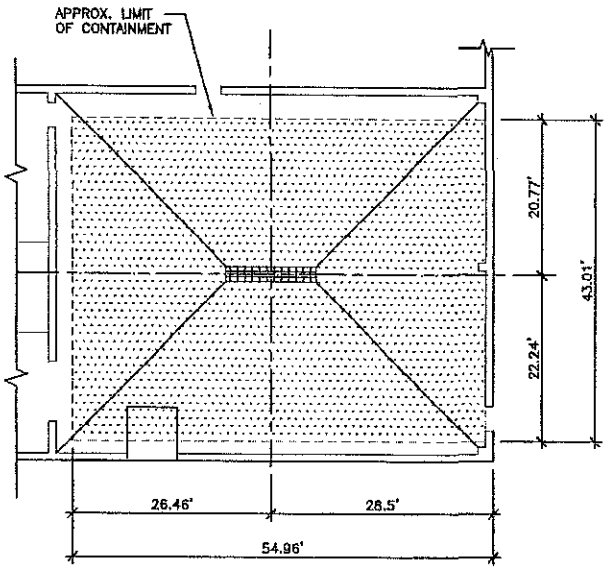

NORTH PLAN VIEW
NO SCALE

SLOPED FLOOR VOLUME

SLOPED FLOOR VOLUME = $(1/3) \times (H) \times (B_1 + B_2 + \sqrt{B_1 \times B_2}) \times (7.48\ GAL/CF)$

$B_1 = (54.96') \times (43.01') = 2364\ FT^2$

$B_2 = (2.00') \times (12.00') = 24\ FT^2$

H = 0.26' (ESTABLISHED AS DIFFERENCE BETWEEN LOW POINT IN ELEVATION AT PERIMETER AND AVERAGE ELEVATION AT TOP OF SUMP)

SLOPED FLOOR VOLUME = $(1/3) \times (0.26') \times (2364 + 24 + \sqrt{2364 \times 24}) \times (7.48\ GAL/CF)$
= 1702 GAL

GROSS CONTAINMENT VOLUME

GROSS CONTAINMENT VOLUME = SLOPED FLOOR VOL. + SUMP VOL.
= 1702 GAL + 442 GAL
= 2144 GAL

Solutions Companies
1350 Boone Industrial Drive • Suite 200 • Columbia • MO 65202
• Phone (573) 443-7100 • Fax (573) 443-7181 •

Client SAFETY-KLEEN CORP. Pg. 4 of 5

Project No. 9341.19 Date 7-22-93

Project Title PEKIN, IL. – CONTAINMENT CALCS.

Subject CONTAINER STORAGE AREA

Designer CWM Cx By HB Prelim ____ Final SD

PALLET DISPLACEMENT VOLUME

ASSUME: DRUMS STORED ON TYPICAL S-K PALLETS: (44" WIDE x 48" DEEP x 5" THICK)
16 GALLON DRUMS (TYPICAL), 8 DRUMS/PALLET, STACKED 2 HIGH, 27 PALLET LOCATIONS.

FOR 0.26' FLOOR SLOPE AND PALLET LAYOUT FROM PERIMETER TO SUMP, ASSUME AVERAGE SUBMERGED DEPTH OF PALLET = (0.26'/2) = 0.13'

COVERAGE OF BOTTOM BOARDS = (4 EA.) x (3 1/2"/48") = 29%
COVERAGE OF VERTICAL 2x4's = (4 EA.) x (1 3/4"/44") = 16%

SUBMERSION DEPTH OF 0.13' (~1.5") WILL COVER 3/4" BOTTOM BOARDS AND (~3/4") OF VERTICAL 2x4's

PALLET DISPLACEMENT VOLUME = (L) x (W) x (H) x (COVERAGE %) x (7.48 GAL/CF) x (NO. OF PALLETS)
= [((48" x 44" x 3/4" x 0.29) + (48" x 44" x 3/4" x 0.16))/ 1728 CU.IN/CF] x (7.48 GAL/CF) x (27)
= 83 GAL

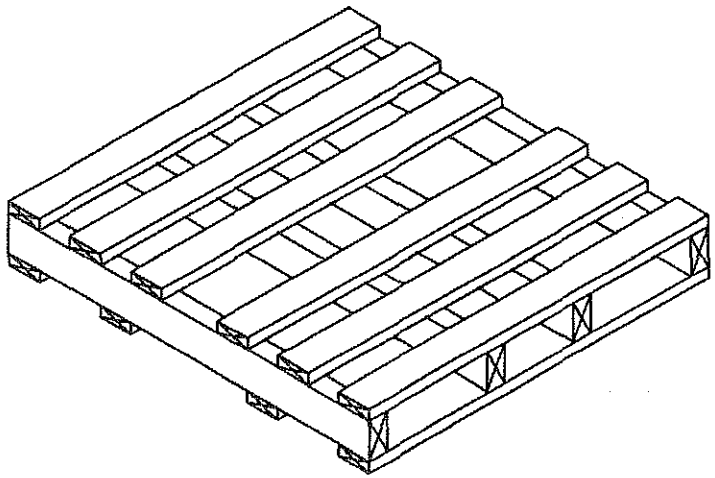

STANDARD S-K PALLET
NO SCALE

Solutions
Companies
1360 Boone Industrial Drive - Suite 200 · Columbia · MO 65202
· Phone: (573) 443-7100 · Fax: (573) 443-7181 ·

Client SAFETY KLEEN CORP. Pg. 3 of 3

Project No. 9341.19 Date 7-22-93

Project Title PEKIN, IL. - CONTAINMENT CALCS.

Subject CONTAINER STORAGE AREA

Designer CWM Cx By HB Prelim ____ Final SD

MISCELLANEOUS DISPLACEMENT VOLUME

FOR MISCELLANEOUS DISPLACEMENT INCLUDING GRATING, CURB RETURNS AT BUILDING COLUMNS, LEVEL AREA AT DOCK, TIRES OF FORKLIFT, ETC... - TAKE 2% OF GROSS CONTAINMENT VOLUME

MISC. DISPL. VOL. = (0.02) x (2144 GAL)
= 43 GAL

NET CONTAINMENT CAPACITY

NET CONTAINMENT CAPACITY = GROSS CONTAINMENT VOLUME
- PALLET DISPLACEMENT VOLUME
- MISCELLANEOUS DISPLACEMENT VOLUME

= (2144 GAL) - (83 GAL) - (43 GAL)

= 2018 GAL

Solutions
Composites
1350 Evans Industrial Drive • Suite 200 • Columbia • MO 65202
• Phone: (573) 443-7103 • Fax: (573) 443-7181 •

Client SAFETY-KLEEN CORP. Pg. 1 of 5

Project No. 9341.19 Date 7-22-93

Project Title PEKIN, IL. – CONTAINMENT CALCS.

Subject RETURN/FILL AREA

Designer CWM Cx By HB Prelim ____ Final SD

SECONDARY CONTAINMENT CALCULATIONS

RETURN/FILL AREA

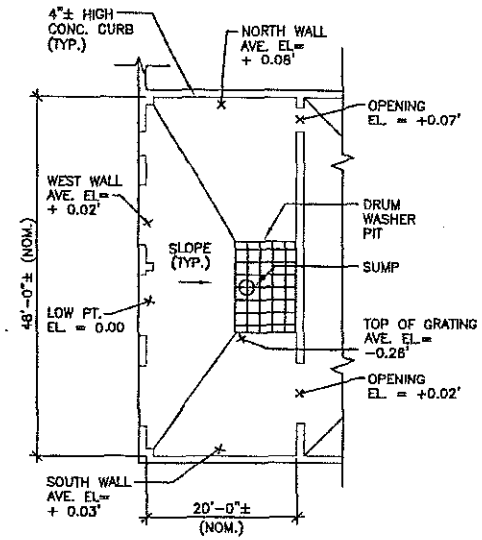

NOMINAL 20'-0"± LONG x 48'-0"± WIDE RETURN/FILL AREA WITH EPOXY COATED SLOPED, CONC. FLOOR AND 4"± HIGH EPOXY COATED CONC. CURB AT PERIMETER, AND A NOM. 12'-0"± LONG x 8'-0"± WIDE x 2'-7"± DEEP STEEL LINED DRUM WASHER PIT WITH A 2'-0"ø± x 2'-1"± DEEP STEEL SUMP

REF: DRAWING NO. MF06-511-0

REF: AS-BUILT FLOOR ELEVATIONS BY R.A.N. CONSULTANTS, INC. DATED 7-12-93

CONTAINMENT PROVIDED BY SLOPED FLOOR AREA, DRUM WASHER PIT AND SUMP.

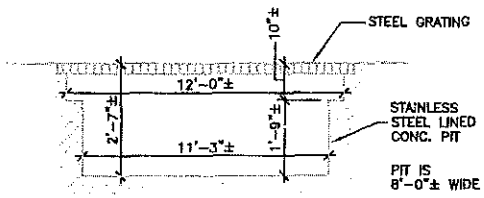

TYP. PIT SECTION
NO SCALE

PLAN VIEW
NO SCALE

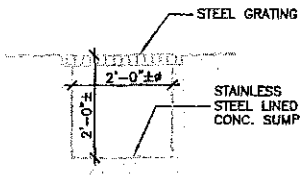

TYP. SUMP SECTION
NO SCALE

PIT VOLUME

PIT VOLUME = $[(L_1 \times W \times D_1) + (L_2 \times W \times D_2)] \times 7.48$ GAL/CF
NOTE: PIT FLOOR SLOPED TOWARDS SUMP, NOT INCLUDED (CONSERVATIVE)

PIT VOLUME = [(12'-0" x 8'-0" x 10") + (11'-3" x 8'-0" x 1'-9")] x (7.48 GAL/CF)
= [(12.00' x 8.00' x 0.83') + (11.25' x 8.00' x 1.75')] x (7.48 GAL/CF)
= (79.68 CF + 157.50 CF) x (7.48 GAL/CF)
= 1774 GAL

Solutions
Companies
1390 Boone Industrial Drive • Suite 300 • Columbia • MO 65202
• Phone (573) 443-7100 • Fax (573) 443-7161 •

Client SAFETY KLEEN CORP. Pg. 2 of 3

Project No. 9341.19 Date 7-22-93

Project Title PEKIN, IL. – CONTAINMENT CALCS.

Subject RETURN/FILL AREA

Designer CWM Cx By HB Prelim ____ Final SD

SUMP VOLUME

SUMP VOLUME $= \pi R^2 \times H \times 7.48$ GAL/CF
$= \pi(1'-0'')^2 \times (2'-0'') \times (7.48$ GAL/CF$)$
$= \pi(1.00')^2 \times (2.00') \times (7.48$ GAL/CF$)$
$=$ 47 GAL

NOTE: THE MIDDLE DOOR OPENING ON THE WEST WALL IS THE LOW POINT ON THE PERIMETER. FLUID REACHING THIS POINT MAY FLOW OUT OF CONTAINMENT. THEREFORE, THE OVERALL FLOOR AREA AVAILABLE FOR CONTAINMENT MUST BE REDUCED TO REPRESENT ONLY THE FLOOR AREA FLUID WILL COVER WHEN IT REACHES THE LOW POINT ON THE PERIMETER.

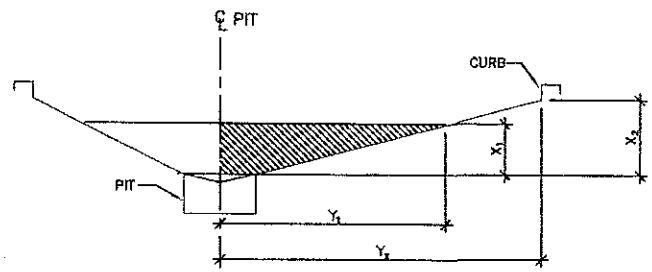

TYP. SECTION
NO SCALE

Y_1 = HORIZONTAL DISTANCE FLUID WILL FILL (UP TO LOW POINT)
Y_2 = HORIZONTAL DISTANCE (℄ PIT TO BASE OF CURB)
X_1 = VERTICAL DISTANCE FLUID WILL FILL (UP TO LOW POINT)
X_2 = VERTICAL DISTANCE (TOP OF PIT TO BASE OF CURB)

WEST WALL

$Y_2 = 15.69'$
$X_2 = 0.26' + 0.02' = 0.28'$
$\frac{X_1}{X_2} = \frac{Y_1}{Y_2} = \frac{0.26'}{0.28'} = \frac{Y_1}{15.69'}$
$\therefore Y_1 = 14.57'$

NORTH WALL

$Y_2 = 25.67'$
$X_2 = 0.26' + 0.08' = 0.34'$
$\frac{X_1}{X_2} = \frac{Y_1}{Y_2} = \frac{0.26'}{0.34'} = \frac{Y_1}{25.67'}$
$\therefore Y_1 = 19.63'$

EAST WALL

DUE TO SLOPING PERIMETER AT EAST WALL, FLUID COLLECTING IN PIT WILL FILL AGAINST THIS WALL DIRECTLY. THEREFORE NO AREA ADJUSTMENT NEEDED.

$\therefore Y_1 = Y_2 = 4.26'$

SOUTH WALL

$Y_2 = 22.26'$
$X_2 = 0.26' + 0.03' = 0.28'$
$\frac{X_1}{X_2} = \frac{Y_1}{Y_2} = \frac{0.26'}{0.29'} = \frac{Y_1}{22.26'}$
$\therefore Y_1 = 19.96'$

Solutions Companies
1390 Boone Industrial Drive · Suite 200 · Columbia · MO 65202
· Phone: (573) 443-7180 · Fax: (573) 443-7181 ·

Client SAFETY-KLEEN CORP. Pg. 3 of 5

Project No. 9341.19 Date 7-22-93

Project Title PEKIN, IL. – CONTAINMENT CALCS.

Subject RETURN/FILL AREA

Designer CWM Cx By HB Prelim ____ Final SD

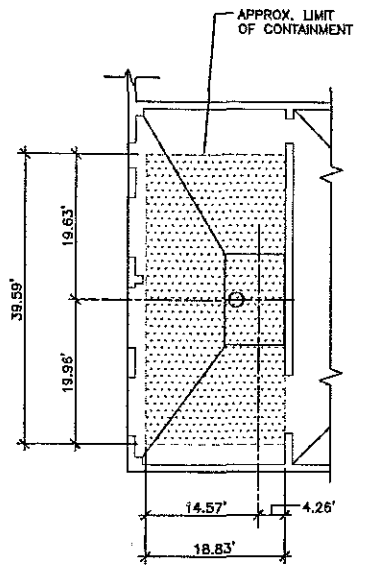

PLAN VIEW
NO SCALE

SLOPED FLOOR VOLUME

SLOPED FLOOR VOLUME = $(1/3) \times (H) \times (B_1 + B_2 + \sqrt{B_1 \times B_2}) \times (7.48\ GAL/CF)$

B_1 = (39.59') x (18.83') = 745 FT^2

B_2 = (12.00') x (8.00') = 96 FT^2

H = 0.26' (ESTABLISHED AS DIFFERENCE BETWEEN LOW POINT ELEV. AT PERIMETER AND AVERAGE ELEV. AT TOP OF DRUM WASHER PIT)

SLOPED FLOOR VOLUME = $(1/3) \times (0.26') \times (745 + 96 + \sqrt{745 \times 96}) \times (7.48\ GAL/CF)$
= 719 GAL

GROSS CONTAINMENT CAPACITY

GROSS CONTAINMENT VOLUME = SLOPED FLOOR VOL. + PIT VOLUME + SUMP VOL.
= 719 GAL + 1774 GAL + 47 GAL
= 2540 GAL

Project Solutions Companies
1360 Boone Industrial Drive - Suite 200 - Columbia - MO 65202
- Phone: (573) 443-7160 - Fax: (573) 443-7161 -

Client SAFETY-KLEEN CORP. Pg. 4 of 5

Project No. 9341.19 Date 7-22-93

Project Title PEKIN, IL. - CONTAINMENT CALCS.

Subject RETURN/FILL AREA

Designer CWM Cx By HB Prelim ____ Final SD

DRUM DISPLACEMENT VOLUME

ASSUME: 30 GALLON DRUMS (TYPICAL), 1'-7"ø x 2'-4 1/2" HIGH, STACKED 2 HIGH, NO PALLETS, 75 PERCENT OF FLOOR AREA AVAILABLE FOR DRUM STORAGE (CONSERVATIVE)

FOR NOMINAL 20'-0" x 48'-0" FLOOR AREA:
AVAILABLE DRUM STORAGE AREA = (20.00') x (48.00') x (0.75)
= 720 SF

DRUM AREA = $\pi D^2/4 = \pi(1'-7")^2/4$ = 1.97 SF
ASSUME EACH DRUM OCCUPIES A 1'-7" SQUARE
TOTAL # OF DRUMS TO BE STORED IN AREA = TOTAL AREA/AREA PER ONE DRUM
= $720'/(1'-7")^2$ = 286 DRUMS IN AREA ON FLOOR (DRUMS MAY ALSO BE STACKED 2 HIGH)

FOR 0.26' FLOOR SLOPE AND DRUM LAYOUT FROM PERIMETER TO PIT
AVERAGE SUBMERGED DEPTH OF DRUM = (0.26'/2) = 0.13'

DRUM DISPLACEMENT VOLUME = DRUM AREA x AVE. SUBMERSION DEPTH x NO. OF DRUMS
= (1.97 SF) x (0.13') x (286) x (7.48 GAL/CF)
= 548 GAL

DRUM WASHER DISPLACEMENT VOLUME

S.W.I.C. DRUM WASHER, CAPACITY = 163 GAL, 2 EA. @ DRUM WASHER PIT,
ASSUME TOP OF DRUM WASHER SUPPORTED 1'-0" ABOVE TOP OF GRATING
DRUM WASHER DIMENSIONS FOR RECTANGULAR PORTION ABOVE GRATING ARE:
2'-9 1/2" WIDE x 4'-9 1/2" LONG

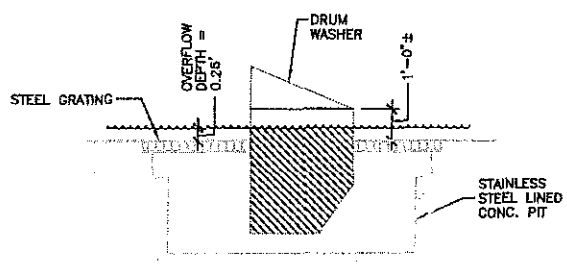

TYP. PIT SECTION
NO SCALE

NET DRUM WASHER DISPL. = [TOTAL DRUM WASHER DISPL.- DISPL. ABOVE OVERFLOW LEVEL] x NO. OF WASHERS
= [(163 GAL) - ((1.00' - 0.26') x (2.79') x (4.79') x (7.48 GAL/CF))] x (2)
= 178 GAL

Solutions
Companies
1390 Boone Industrial Drive • Suite 200 • Columbia • MO 65202
• Phone: (573) 443-7100 • Fax: (573) 443-7161 •

Client SAFETY-KLEEN CORP. Pg. 5 of 5

Project No. 9341.19 Date 7-22-93

Project Title PEKIN, IL. – CONTAINMENT CALCS.

Subject RETURN/FILL AREA

Designer CWM Cx By HB Prelim ____ Final SD

MISCELLANEOUS DISPLACEMENT VOLUME

FOR MISCELLANEOUS DISPLACEMENT INCLUDING GRATING, CURB RETURNS AT BUILDING COLUMNS, TIRES FOR FORKLIFT, ETC... – TAKE 2% OF GROSS CONTAINMENT VOLUME

MISC. DISPL. VOL. = (0.02) x (2540 GAL)
= 51 GAL

NET CONTAINMENT CAPACITY

NET CONTAINMENT CAPACITY = GROSS CONTAINMENT VOLUME
– DRUM DISPLACEMENT VOLUME
– DRUM WASHER DISPLACEMENT VOLUME
– MISCELLANEOUS DISPLACEMENT VOLUME

= (2540 GAL) – (548 GAL) – (178 GAL) – (51 GAL)

= 1763 GAL

QUESTEC CORPORATION

CONSULTING ENGINEERS
Mechanical • Electrical • Civil • Environmental

4812 SANTANA CIRCLE, COLUMBIA, MO 65203

Client SAFETY KLEEN CORP. Pg 1 of 1
Project No. 9238.6 Date 3/24/93
Project Title DEKIN, IL.
Subject CONTAINMENT CALCS.
Designer SD Cx By MB. Prelim ____ Final ____

SECONDARY CONTAINMENT CALCULATIONS
2 BAY FLAMMABLE STORAGE SHELTER

VOL. = (5')(10')(6/12)(6 PANS) = 150 CF
CONTAINMENT CAPACITY = 150 CF (7.48 GAL/CF) = 1122 GAL.

NOTE: ALL PANS INTERCONNECTED

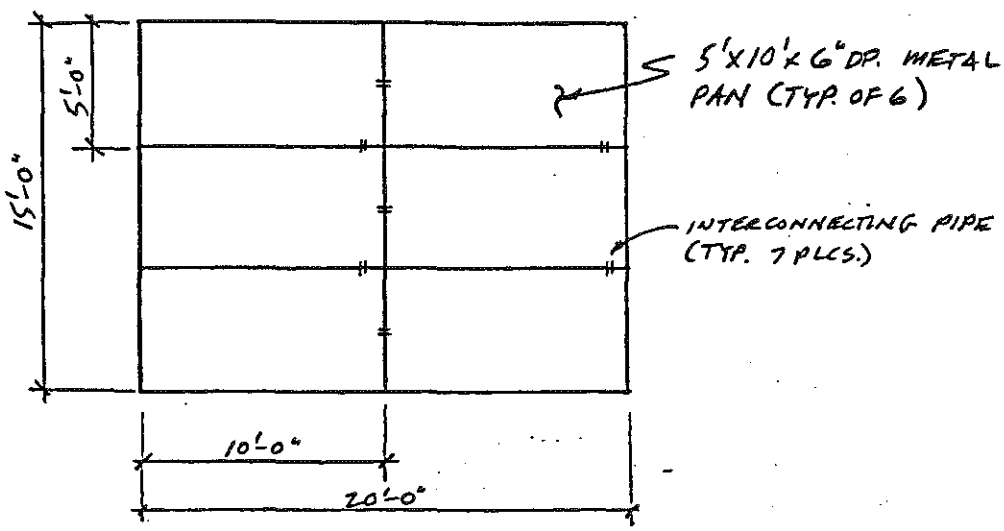

PLAN VIEW
NO SCALE

Exhibit E-4
Secondary Containment Calculations;
Solvent Tank Farm Area
Self-Contained Antifreeze Tank

QUESTEC CORPORATION
CONSULTING ENGINEERS
Mechanical • Electrical • Civil • Environmental
4812 SANTANA CIRCLE, COLUMBIA, MO. 65203

Client SAFETY KLEEN CORP. Pg. 1 of 2
Project No. 9238.6 Date 3/24/93
Project Title PEKIN, IL.
Subject CONTAINMENT CALCS.
Designer SD Cx By HB Prelim ____ Final ____

SECONDARY CONTAINMENT CALCULATIONS

4 Pack Tank Farm 4 VERTICAL Tank(s)

REFERENCE: Field Data

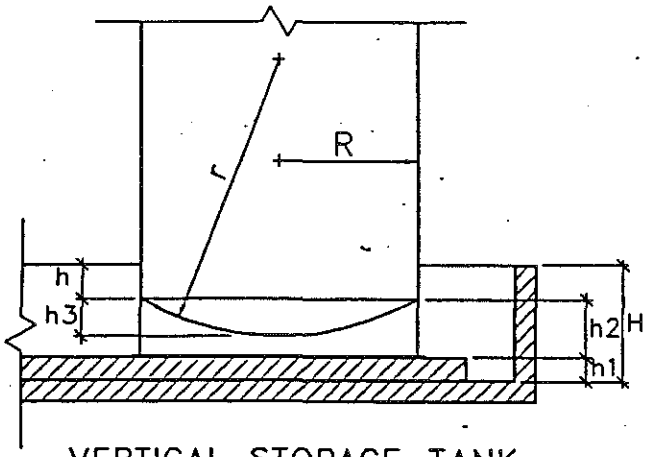

VERTICAL STORAGE TANK
F&D BOTTOM
NO SCALE

Data:

L1	[tank length]	N/A	ft.
L	[inside wall length]	38.73	ft.
W	[inside wall width]	38.69	ft.
l	[pad length]	31.96	ft.
w	[pad width]	31.88	ft.
R	[tank radius]	6.00	ft.
r	[dish radius]	12.00	ft.
H	[inside wall height]	3.48	ft.
h1	[pad height]	0.17	ft.
h2	[support height]	2.00	ft.
h3	[dish height]	1.61	ft.
h	[tank segment height]	1.31	ft.
**	rainfall	5.2	in.

* Note: Sump and sloped concrete slab volume not included (conservative).
** U.S. Dept. of Comm. Tech. Paper No. 40

Tank Sizes:
4 ea 12'-0"Φ 20,000 GAL FADBO

Formulas Used:

TANK SEGMENT HT. = h = H - h1 - h2

SUBMERGED DISH HT. = h (sub) = h3 + h

* DIKE CONTAINMENT VOLUME = (L)(W)(H)(7.48 gal/cf)

PAD DISPLACEMENT VOLUME = (l)(w)(h1)(7.48 gal/cf)(number of pads)

TANK DISPLACEMENT VOLUME

vert. tank, dished bottom = $[1/3\,(\pi)(h3)^2\,(3r - h3) + \pi R^2 h](7.48\ gal/cf)$(number of tanks)

vert. tank, flat bottom = $(\pi R^2 h)(7.48\ gal/cf)$(number of tanks)

vert. tank, cone bottom = $[1/3\,(\pi)(h)(R1^2 + R2^2 + R1(R2)) + \pi R^2 h](7.48\ gal/cf)$(number of tanks)

horiz. tank, flat ends = $[R \cos^{-1}((R - h / R)\ rad)] - [(R - h)\sqrt{2(R)(h) - h^2}\,](L1)(7.48\ gal/cf)$(# of tanks

MISC. DISPLACEMENT VOLUME (Pumps, Piping, Supports, etc.) = 2% of dike volume

LOCAL RAINFALL ALLOWANCE (25 yr /24 hr.) = (rainfall/12)(L)(W)(7.48 gal/cf)

QUESTEC CORPORATION

CONSULTING ENGINEERS
Mechanical • Electrical • Civil • Environmental

4812 SANTANA CIRCLE, COLUMBIA, MO. 65203

Client SAFETY KLEEN CORP. Pg. 2 of 2

Project No. 9238.6 Date 3/24/93

Project Title PEKIN, IL.

Subject CONTAINMENT CALCS.

Designer SD Cx By HB Prelim ____ Final ____

SECONDARY CONTAINMENT CALCULATIONS

Calculations :

(a) DIKE CONTAINMENT VOLUME =
$(38.73)(38.69)(3.48)(7.48)$ (+) 39,006 gal.

(b) VOLUME OF LARGEST TANK WITHIN DIKED AREA =
(-) 20,000 gal.

(c) PAD DISPLACEMENT VOLUME =
$(31.96)(31.88)(0.17)(7.48)(1)$ (-) 12,96 gal.

(d) TANK DISPLACEMENT VOLUME =
$[\frac{1}{3}(\pi)(1.61)^2(3(12)-1.61) + \pi(6)^2(1.31)](7.48)(3)$ (-) 5,419 gal.

(e) MISC. DISPLACEMENT VOLUME =
$(0.02)(39,006)$ (-) 780 gal.

(f) LOCAL RAINFALL ALLOWANCE =
$(5.2/12)(38.73)(38.69)(7.48)$ (-) 4,857 gal.

TOTAL EXCESS CONTAINMENT VOLUME [sum (a)-(f)] (+) 6,654 gal.

QUESTEC CORPORATION

CONSULTING ENGINEERS
Mechanical • Electrical • Civil • Environmental

4812 SANTANA CIRCLE, COLUMBIA, MO 65203

Client SAFETY KLEEN CORP. Pg 1 of 1
Project No. 9238.6 Date 3/24/93
Project Title PEKIN, IL.
Subject CONTAINMENT CALCS.
Designer CWM Cx By LOL Prelim ____ Final ____

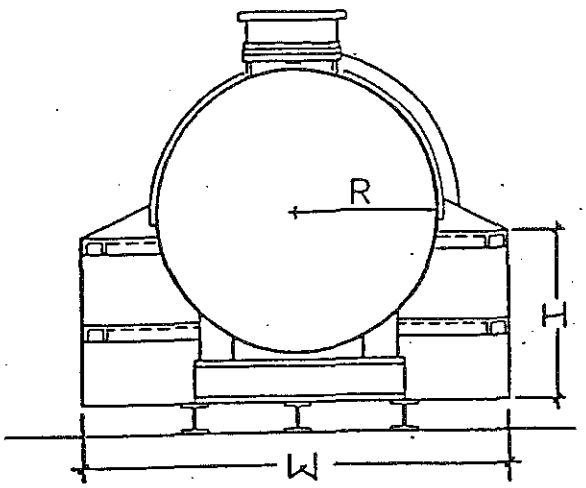

HORIZONTAL STORAGE TANK
SELF-CONTAINED
NO SCALE

SECONDARY CONTAINMENT CALCULATIONS FOR ABOVE GROUND HORIZONTAL STORAGE TANK

NOMINAL 10,000 GAL. TANK

DATA;

L_1	(SECONDARY CONT. LENGTH)	34.92'
L_2	(TANK LENGTH)	26.83'
R	(TANK RADIUS)	4.00'
W	(SECONDARY CONT. WIDTH)	10.75'
H	(SECONDARY CONT. HEIGHT)	4.17'

FORMULAS USED

SECONDARY CONTAINMENT VOLUME $= (W)(H)(L_1)(7.48 \frac{GAL}{S.F.})$

MISC. DISPLACEMENT VOLUME (SUPPORTS, ETC.) = 1% OF SECONDARY CONT.

TANK VOLUME $= (\pi)(R^2)(L_2)\ 7.48 \frac{GAL}{S.F.}$

CALCULATIONS

A. SECONDARY CONTAINMENT VOLUME $= (10.75)(4.17)(34.92)(7.48) = +11,709$

B. MISC. DISPLACEMENT VOLUME $= (11,709)(0.01) = -117$ gal

C. TANK VOLUME $= (\pi)(4.00)^2(26.83)(7.48) = -10,088$

TOTAL EXCESS CONTAINMENT VOLUME $= +1,504$ GAL.

Exhibit E-5
Ultrasonic Thickness Assessment Results – 7/12/2002

SCHREIBER & YONLEY ASSOCIATES
ENVIRONMENTAL ENGINEERS
271 Wolfner Drive • Fenton, Missouri 63026
636/349-8399 • Fax 636/349-8384

July 18, 2002

Mr. Kevin Farmer
Environment, Health and Safety Manager
Safety-Kleen Systems, Inc.
201 LaSalle Street
Cape Girardeau, MO 63701

Re: Spent Solvent and Antifreeze Tank Systems-Inspection and Thickness Testing Certification
Safety-Kleen Pekin, Illinois Branch

Dear Mr. Farmer:

This letter shall provide the tank certifications required for the spent solvent tank and the spent antifreeze tank located at the Safety-Kleen Pekin Branch, RR #3, Pekin, Illinois. As requested by your office, the 20,000-gallon spent solvent tank and the 10,000-gallon spent antifreeze tank were visually inspected, and shell thickness measurements were collected on July 12, 2002. In addition, the piping and secondary containments were visually inspected. Thickness measurements of each tank's metal were made using an ultrasonic thickness gauge (Krautkramer Branson DMR Thickness Gauge). No tank leak or other condition indicating a deficiency in the integrity of either tank was found. The top manways were seated and bolted. Shell thickness measurements were found to exceed the minimum design thickness requirements of UL 142 and API 650.

The results of the tank inspection and ultrasonic thickness testing are recorded on the attached forms. Comparison of these results with 1997, 1998, 1999, 2000, and 2001 data indicates no significant change in shell thickness has occurred over the past five years. Rust spots on the spent solvent tank roof and shell should be cleaned and recoated to assure no deterioration of the tank exterior surfaces.

The secondary containments were subjected to a visual inspection. No signs of leakage were observed in either containment. The containment coating lining the floor and walls of the spent solvent tank farm secondary containment appeared to be in good condition, with the exception of minor cracking, which should be repaired. Rainwater is removed from the spent solvent tank containment by pumping from a blind sump located at one corner of the containment system.

The spent antifreeze tank is secondarily contained within a rectangular steel box, which is covered to prevent accumulation of rainwater in the secondary containment. The inside of this containment exhibits rusting and deterioration of the coating, particularly on the floor of the containment.

I conclude that the Spent Parts Washer Solvent Tank, the Spent Antifreeze Tank, and their containment systems are certifiable for continued service. Routine maintenance, including cleaning and repainting of rusted spots on the spent solvent tank and restoring of the secondary containment coatings, is recommended.

Sincerely,

SCHREIBER, YONLEY & ASSOCIATES

Franklin Donald Maddox

F. Donald Maddox, P.E.
Senior Associate Engineer

Franklin D. Maddox

FDM:bah
Enclosures
X:/SKFILL/020085/Correspondence/02certltr.doc

SAFETY-KLEEN PEKIN
ULTRASONIC TANK THICKNESS READINGS
SPENT SOLVENT TANK

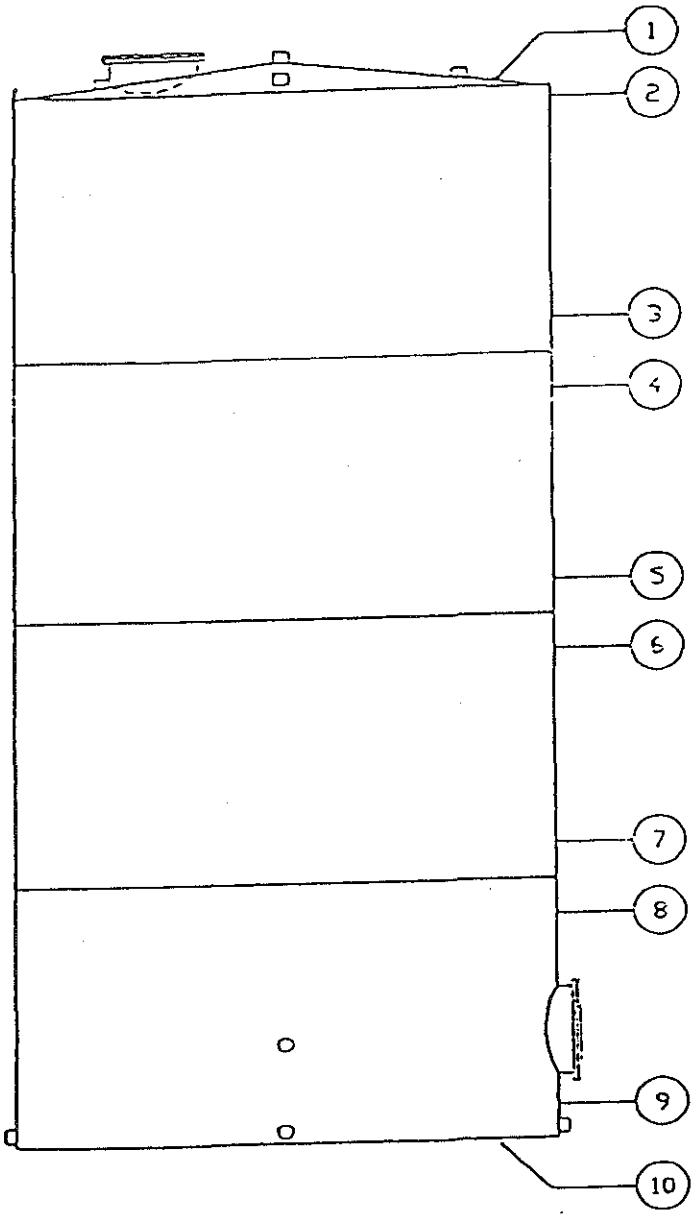

Readings by: H. Pope
Date: 7/12/02
Readings adjusted for paint thickness (0.005 in.)
Velocity = 0.2400 in/sec

POINT #	NORTH	EAST	SOUTH	WEST	2002 AVG.	2001 AVG.	2000 AVG.	1999 AVG.	1998 AVG.	1997 AVG.
TOP-1	0.251	0.263	0.266	0.254	0.259	0.258	0.258	0.259	0.255	0.247
2	0.262	0.248	0.255	0.251	0.254	0.257	0.255	0.256	0.255	0.249
3	0.264	0.259	0.254	0.251	0.257	0.260	0.258	0.257	0.257	0.251
4	0.260	0.257	0.253	0.255	0.256	0.255	0.257	0.257	0.253	0.249
5	0.259	0.268	0.251	0.255	0.258	0.259	0.261	0.263	0.255	0.253
6	0.257	0.263	0.255	0.258	0.258	0.259	0.259	0.259	0.259	0.257
7	0.254	0.263	0.262	0.264	0.261	0.262	0.263	0.266	0.261	0.257
8	0.253	0.257	0.254	0.256	0.255	0.259	0.257	0.259	0.255	0.252
9	0.261	0.252	0.255	0.257	0.256	0.259	0.256	0.260	0.257	0.261
BOT-10	0.263	0.269	0.270	0.263	0.266	0.268	0.266	0.272	0.265	0.266

VISUAL INSPECTION
LIQUID STORAGE TANK AND CONTAINMENT

LOCATION SAFETY KLEEN – PEKIN BRANCH

TANK ID DIRTY MINERAL SPIRITS

DATE 7/12/02 **INSPECTOR** J. WITTE

OBSERVATIONS	OK	ACTION* NEEDED
TANK		
TANK SHELL		✓
TANK SUPPORT	✓	
TANK ROOF		✓
WELDED JOINTS	✓	
TANK INTEGRITY	✓	
SECONDARY CONTAINMENT		
LINER/COATING		✓
WALLS	✓	
FLOOR	✓	
SUMP	✓	
DRAIN VALVE	✓	
APPURTENANCES		
TOP MANWAY SECURE	✓	
LEVEL INDICATOR	✓	
LOAD-LOAD OFF PIPING	✓	
RECEIVING PIPING	✓	
SIDE MANWAYS	✓	

***COMMENTS ON ACTION NEEDED:** VERY RUSTY ON TOP OF TANK, CRACKS IN EPOXY (should not leak)

SAFETY-KLEEN PEKIN
ULTRASONIC TANK THICKNESS READINGS
HORIZONTAL SPENT ANTIFREEZE TANK

SOUTH		NORTH	
POINT	READING	POINT	READING
1	-	1	-
2	-	2	-
3	0.275	3	0.283
4	0.276	4	0.280
5	0.267	5	0.273
6	0.280	6	0.283
7	-	7	-
2002 AVG.	0.275	2002 AVG.	0.280
2001 AVG.	0.284	2001 AVG.	0.278
2000 AVG.	0.276	2000 AVG.	0.278
1999 AVG.	0.277	1999 AVG.	0.276
1998 AVG.	0.273	1998 AVG.	0.275
1997 AVG.	0.268	1997 AVG.	0.267

Readings by: H.Pope
Readings adjusted for paint thickness

Date: 7/12/02
Velocity = 0.2400 in/sec

Thickness Readings Adjusted
for 0.005 in. Paint Thickness

NOTE : Points 1, 2 & 7 are located on the secondary containment shell. No thickness measurements were taken on these points.

TANK SHELL THICKNESS TEST

SECTION # 1		SECTION # 2		SECTION # 3		SECTION # 4		SECTION # 5	
POINT #	READING	POINT	READING	POINT	READING	POINT	READING	POINT	READING
1	-	1	-	1	-	1	-	1	-
2	-	2	-	2	-	2	-	2	-
3	0.272	3	0.272	3	0.271	3	0.273	3	0.276
4	0.268	4	0.264	4	0.266	4	0.266	4	0.278
5	0.267	5	0.269	5	0.270	5	0.273	5	0.275
6	0.269	6	0.279	6	0.271	6	0.280	6	0.278
7	-	7	-	7	-	7	-	7	-

2002 AVG.	2001 AVG.	2000 AVG.	1999 AVG.	1998 AVG.	1997 AVG.
-	-	-	-	-	-
-	-	-	-	-	-
0.273	0.276	0.274	0.272	0.273	0.262
0.268	0.274	0.268	0.272	0.270	0.258
0.271	0.270	0.270	0.271	0.274	0.267
0.275	0.278	0.275	0.275	0.271	0.267
-	-	-	-	-	-

DATE:_____

SITE: _____

INSPECTOR:_____

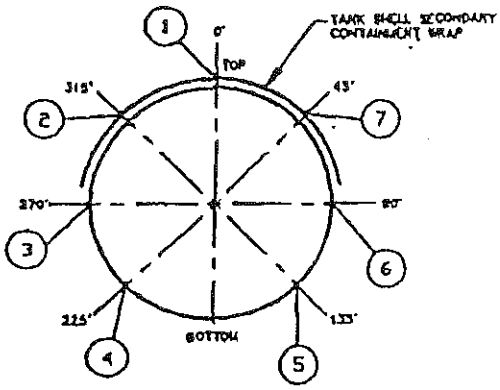

TYPICAL TANK SHELL SECTION
UT TEST LOCATION
(SECTION LOOKING SOUTH)

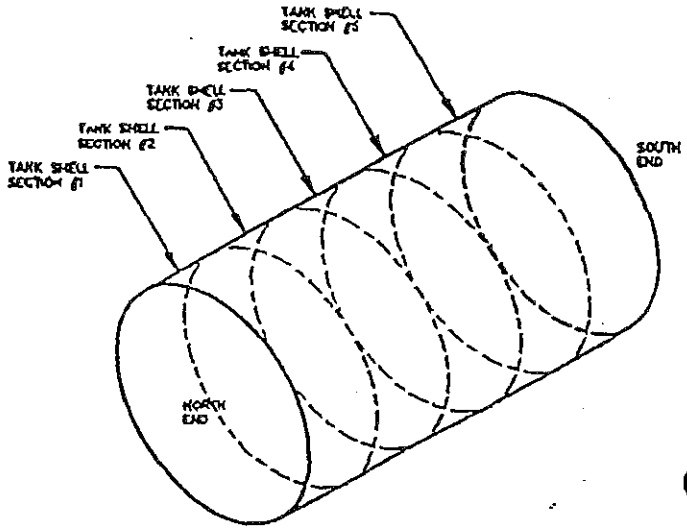

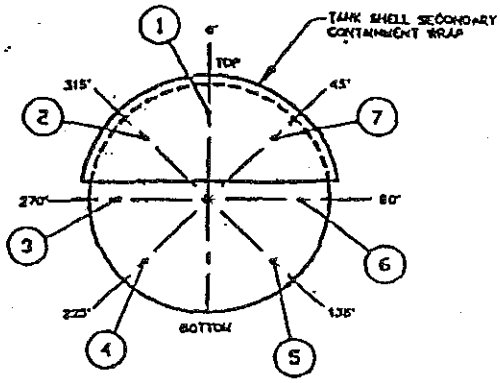

TYPICAL TANK HEAD
UT TEST LOCATION

ORIZONTAL TANK ULTRASONIC THICKNESS TEST

NO SCALE

VISUAL INSPECTION
LIQUID STORAGE TANK AND CONTAINMENT

LOCATION Perkin Branch - Safety Kleen

TANK ID Waste Antifreeze

DATE 7-12-02 **INSPECTOR** HB

OBSERVATIONS	OK	ACTION* NEEDED
TANK		
TANK SHELL	✓	
TANK SUPPORT	✓	
TANK ROOF	✓	
WELDED JOINTS	✓	
TANK INTEGRITY	✓	
SECONDARY CONTAINMENT - Steel Shell		
LINER/COATING		*
WALLS	✓	
FLOOR		*
SUMP	NA	
DRAIN VALVE	NA	
APPURTENANCES		
TOP MANWAY SECURE	✓	
LEVEL INDICATOR	✓	
LOAD-LOAD OFF PIPING	✓	
RECEIVING PIPING	✓	
SIDE MANWAYS	NA	

***COMMENTS ON ACTION NEEDED:**

* Secondary containment floor very rusty/bubbled paint

SAFETY KLEEN ILLINOIS BRANCHES
SPENT MATERIAL TANK INSPECTIONS
TOP MANWAY CHECKS (VISUAL)

BRANCH/ TANK	TANK SIZE (gal.)	DATE	MANWAY BOLTED	MANWAY COVER APPEARS SEATED
CASEYVILLE				
SPENT SOLVENT	15000	7/11/02	YES	YES
PEKIN				
SPENT SOLVENT	20000	7/11/02	YES	YES
SPENT ANTIFREEZE	10000	7/11/02	YES	YES
URBANA				
SPENT SOLVENT	15000	7/12/02	YES	YES

Exhibit E-6
Design Engineering Assessment Used Solvent Storage Tank

WISHMEIER & ASSOCIATES
ARCHITECTS • ENGINEERS
119 N. TAYLOR STREET • SOUTH BEND, INDIANA 46601
(219) 234-3433

PROJECT OBSERVATION REPORT NO. 1

Project: Safety-Kleen Corp., Pelin, Illinois
Solvent & Waste Oil Tank & Piping Tests

Date: March 6, 1989

Time: 1:30 pm

Weather & Temperature: Cloudy and very windy. Temperature 25F

Persons on Site: Keith Wishmeier, plumbing superintendent
Tom Snyder and two of his men.

Discussion:

All of the tank and piping tests were initially run at the same time. All piping is welded outside of the Tank Farm and uses threaded fittings inside the Tank Farm and inside the remote fill containers. Descriptions of the pressure tests follow:

TANK TESTS

Waste Oil Tank #1 to the southeast was pressurized to 4.1 psi at 2:00 pm. By 2:30 pm the pressure in Tank #1 had dropped to 4.0 psi. This is within a 5% acceptable tolerance. Tank #1 passes the pressure test.

Waste Oil Tank #2 to the northeast was pressurized to 4.2 psi at 2:00 pm. By 2:30 pm the pressure in Tank #2 was still holding at 4.2 psi. Tank #2 passes the pressure test.

The Clean Solvent Tank to the southwest was pressurized to 4.0 psi at 2:00 pm. By 2:10 pm the pressure in the Clean Solvent Tank had dropped to 3.8 psi. The tank fittings were soap tested and a leak was found in the safety valve at the side of the tank. The valve packing nut was tightened and the tank was again pressurized to 4.0 psi at 2:15 pm. By 2:45 pm the pressure in the Clean Solvent Tank had dropped to 3.9 psi. This is within a 5% acceptable tolerance. The Clean Solvent Tank passes the pressure test.

PEKIN, IL

WISHMEIER & ASSOCIATES
119 N. TAYLOR ST.
SOUTH BEND, IN 46601

3-10-89
3 of 3

```
RUN
* * * * * * CONCRETE SLAB & BEAM DESIGN * * * * * *

THIS PROGRAM WILL DETERMINE MINIMUM DEPTH, SHEAR, &
BOND REQUIREMENTS FOR THE CHOSEN CONCRETE SECTION.

ENTER CONCRETE FACTORS R,J,FS AND D, WHERE R AND J
VARY WITH CONCRETE STRENGTH, FS=ALLOWABLE STEEL
STRESS (#/IN^2), AND D=DEPTH OF FOOTING STEEL (IN)
? 226,.872,20000,4

FIRST CONSIDER PRIMARY STEEL (LABLE #1):
ENTER MOMENT M1 (#FT) & WIDTH W1 (IN)? 665.6,12
D1(MIN STEEL DEPTH)=SQR((M1*12)/(R*W1)):
M1= 665.6 #FT  D1= 1.716139 IN

A1(REQUIRED AREA STEEL)=(M1*12)/(FS*J*D):
A1= .1144954 IN^2
SELECT STEEL. ENTER NUMBER OF BARS N1 AND AREA/BAR
? 1,.2
TOTAL BAR AREA SELECTED= .2 IN^2

TEST SELECTED SECTION FOR SHEAR. V1 <= 60 #/IN^2:
ENTER MAXIMUM END SHEAR S1 (#)? 499.2
V1=S1/(W1*D):
S1= 499.2 #  V1= 10.4 #/IN^2

TEST PRIMARY STEEL FOR BOND. U1 <= BOND STRESS:
ENTER BAR PERIMETER P1(IN) AND BOND STRESS X1(#/IN^2)
? 1.571,500
U1=S1/(N1*P1*J*D):
S1= 499.2 #  U1= 91.10076 #/IN^2

CONSIDER SECONDARY STEEL (LABLE #2):
ENTER MOMENT M2 (#FT) & WIDTH W2 (IN)?
```

the fill point immediately adjacent to the temporary quick disconnect. These leaks were repaired by additional doping and tightening of the fittings. The line was again pressurized to 86 psi at 5:25 pm. By 6:10 pm the pressure had dropped to 84 psi. This is within a 5% acceptable tolerance. The #2 Waste Oil Piping passes the pressure test.

The Clean Solvent Piping was pressurized to 85 psi at 2:00 pm. By 2:45 pm the pressure had dropped to 83 psi. This is within a 5% acceptable tolerance. The Clean Solvent Piping passes the pressure test.

The Used Solvent Piping was pressurized to 85 psi at 2:00 pm. By 2:45 pm the pressure was still holding at 85 psi. The Used Solvent Piping passes the pressure test.

Comments: All piping will be approved for use after the following items have been completed:

1. The piping is to be bolted down to the top of the concrete dike wall creating a permanent pipe support.

2. The piping is to have at least two coats of paint applied for corrosion protection.

3. The Return/Fill Solvent piping which is to pass from the Solvent Tanks to the Return/Fill Shelter has not yet been installed. The Return/Fill Shelter itself has not yet been installed. These two items must be completed and these piping runs must be tested before putting these piping sections into use.

4. The piping and tank installation at this site are excellent. I commend this Plumbing Contractor for his excellent work. Safety-Kleen has received an excellent pipe welding job which included welding the Solvent and Waste Oil Piping to the steel walls of the remote fill containers. I recommend that this be done at all sites.

Submitted by,

Charles Keith Wishmeier

Charles Keith Wishmeier, P.E.
WISHMEIER & ASSOCIATES

cc: Mr. Tim Taylor of Safety-Kleen Corp.
file

3. All non-galvanized piping is to be painted with two coats of paint for corrosion protection.

The Clean Solvent Piping was pressurized to 85 psi at 1:30 pm. As with the Used Solvent Piping, all new piping had been installed including new fill nozzles. The Clean Solvent Pump had been bypassed. Threaded connections were used in the Return/Fill Shelter and in the Tank Farm. Welded 2" piping was used between the Return/Fill Shelter and the Tank Farm. By 1:45 pm the pressure had dropped to 80 psi. The plumber soap tested the area around the pressure gauge and found the gauge fitting to be leaking. At 1:50 pm the line was repressurized to 85 psi. By 2:05 pm the pressure had dropped to 80 psi. The entire line was soap tested once again and no new leaks were observed. However, the 2" gate valve adjacent to the Clean Solvent Tank was found to be not fully closed. This valve was tightened and at 2:10 pm the line was repressurized to 86 psi. By 3:05 pm the pressure had dropped to 82 psi, within an acceptable 5% tolerance. This line passes the pressure test and will be accepted for use after the following items of work have been completed.

1. The Clean Solvent Pump is to be reconnected.

2. All non-galvanized piping is to be painted with two coats of paint for corrosion protection.

COMMENTS REGARDING THE HIGH LEVEL ALARM SYSTEM INSTALLATION

At the electrician's request, I discussed the wiring of the High Level Alarm System with him. As I have mentioned in previous reports, there are required items missing from the present High Level Alarm System drawings as well as some serious errors. On Sheet D11631 I marked the relay contacts which are shown circled as "External High Level Alarm System Control Panel." One contact set was marked "Contacts closed only when fluid in tanks is below overflow point". The other contact set was marked "Contacts closed only when the High Level Alarm System is turned on".

On Sheet D11539 the four High Level Alarm Float Switches were eliminated, and in their place relay contacts within the Drexelbrook receiver were substituted, such that these relay contacts are controlled by the fluid level probes within the tanks.

These questions are coming up on every site I visit where the High Level Alarm System is being installed. I highly recommend that Safety-Kleen check the operation of the High Level Alarm System at all sites to make sure that the solvent pumps CANNOT be operated when the High Level Alarm System is turned OFF. This problem applies mainly to the solvent systems which use Safety-Kleen onsite pumps. The Waste Oil Tanks are filled using pumps controlled by the tanker trucks.

logged

4 dupl. originals
- Elgin permit
- Branch
- Tech Services
- IEPA

WISHMEIER & ASSOCIATES
ARCHITECTS • ENGINEERS
119 N. TAYLOR STREET • SOUTH BEND, INDIANA 46601
(219) 234-3433

October 11, 1990

Mr. Paul Pederson
Safety-Kleen Corporation
777 Big Timber Rd.
Elgin, IL 60123

Dear Mr. Pederson:

Wishmeier and Associates, Consulting Engineers, has been contracted by Safety-Kleen Corporation to certify that the installation of Safety-Kleen Corporation's new aboveground hazardous waste storage tanks and auxiliary equipment at the Pekin, Illinois Service Center are in full compliance with Federal Regulation 40 CFR 264.192 and 40 CFR 264.193.

This letter will present those aspects of the installation of the tank system which are necessary to determine compliance with 40 CFR 264.192 and 40 CFR 264.193, and which the firm has assessed and reviewed.

The following is a discussion of each item as it occurs in the regulation:

40 CFR 264.192 (a)

An assessment that the foundation, structural support, seams, and connections are adequately designed and that the tank system will have sufficient structural strength, compatibility with the waste to be stored, and corrosion protection to ensure that it will not collapse, rupture or fail.

(1) The tank has been designed and constructed in accordance with National Fire Protection Agency Standards, and Underwriters, Laboratories, Inc., "Standard for Steel Aboveground Tanks for Flammable and Combustible Liquids," UL 142-1972.

(2) i. The three hazardous characteristics of the used mineral spirits waste, as defined by 40 CFR 261, are the following:

A. Ignitability (D001) - A waste is considered ignitable, and therefore hazardous, if its flash point is below 140 Degrees F.

The used mineral spirits to be stored in this tank has a typical flash point in the range of 100 Degrees F. to 110 Degrees F., and therefore is ignitable (D001).

B. EP Toxicity due to Cadmium content (D006) - A waste is considered to be EP toxic due to cadmium content if its concentration exceeds 1.0 ppm (parts per million).

Illinois Service Center, and operating procedures are such that they minimize the possibility of ignition sources near the tank farm.

It, therefore, can be concluded that there is no apparent, incompatibility of the tank with the hazardous waste contents.

(3) This section of the regulations addresses tank systems for which the external shell or any external metal component will be in contact with soil or water and, therefore, pertains primarily to underground or submerged tank systems. Since the tank and all components will be above ground, there will be no contact with the soil, and the only contact with water will be from precipitation.

Protection from precipitation is achieved by rust-resistant coatings. The tank surface has been prepared in compliance with the Steel Structure Painting Code SSPC - SP3-63T, and then painted with one coat of red oxide paint and two coats of alkyd base gloss white structural enamel to insure proper sealing. All piping is specified Schedule 40 galvanized (a non-rusting material), and all exposed threads and joints will be painted with a rust-resistant exterior grade paint.

(4) This section of the regulations applies to underground tank systems only.

(5) Designs have been analyzed to ensure the following:

i. Tank foundations will maintain the load of the full tanks. An analysis of this design (a copy of which is attached) was performed, resulting in the following comparisons of maximum stress versus allowable stress in the materials:

	MAXIMUM STRESS	ALLOWABLE STRESS
a. Concrete Slab	81 psi	750 psi
b. Underlying Soil	2365 psf	3000 psf

ii. The tank system need not be anchored since it will not be placed in a saturated zone, (i.e., this applies to underground tanks only), and it will not be located in a seismic fault zone.

iii. The tank system will not be installed on soils susceptible to frost heave.

40 CFR 264.192 (f)

This section deals with information provided under paragraph (a)(3) As mentioned above, this paragraph concerns itself primarily with corrosion and corrosion protection of underground or submerged tanks. To recap what has already been presented regarding corrosion protection, three points are mentioned here.

(1) The storage tanks and all ancillary equipment are above ground and, therefore, are not in contact with the soil. The only water contact will be with precipitation.

(2) All exterior surfaces of the tanks are sealed and painted; all piping is either galvanized material or painted blackiron; and all exposed threads, joints and welds will be painted with a rust-resistant exterior grade paint.

(3) The used mineral spirits is not corrosive, and, in fact, mineral spirits itself is often used on metal parts to protect against rusting.

40 CFR 264.192 (g)

Safety-Kleen Corporation will keep on file at the facility this written statement certifying the installation of the tank system in accordance with the requirements of paragraphs (b) through (f) of 40 CFR 264.192 that attest that the tank system was properly designed and installed and that repairs, pursuant to paragraphs (b) and (d) were performed. These written statements also include the certification statement as required in 270.11 (d) of Chapter 40 of the code of Federal Regulations.

40 CFR 264.193 (a)

This section deals with the requirement for secondary containment with the installation of new and existing tank systems. This report deals with a new tank system.

(1) Secondary Containment in the form of an open concrete dike vault has been provided prior to this new tank system being put into use.

(2) Existing tank system: Not Applicable.

(3) Existing tank system: Not Applicable.

(4) Existing tank system: Not Applicable.

(5) Not Applicable.

40 CFR 264.193 (d)

This section deals specifically with the Secondary Containment method chosen.

(1) A liner (external to the tank): Not Applicable.

(2) A vault: This was the method chosen.

(3) A double-walled tank: Not Applicable.

(4) An equivalent device approved by the Regional Administrator: Not Applicable.

The following discussion will deal solely with the Secondary Containment chosen, the concrete dike vault:

(2) The vault system:

(i) Has been designed and constructed to contain 100% of the contents of the largest tank within the dike vault system.

(ii) Has been designed and constructed with sufficient additional capacity to contain precipitation from a 25-year, 24-hour rainfall event.

(iii) Has been designed and constructed with chemical resistant water stops at the only joint in the construction, the joint separating the dike wall from the monolithically poured concrete curb upon which the dike wall rests.

(iv) Has been provided with two coats of Sikagard 62 on the interior dike walls and concrete slab as explained earlier under 40 CFR 264.193 (c) (1).

(v) Has been provided with means to protect against the formation of and ignition of vapors within the dike vault. The concrete dike vault is fully open to the atmosphere and thus well ventilated. The vault is inspected by Safety-Kleen personnel on a daily basis. All electrical systems have been designed and constructed Class I, Division 2 Explosion-Proof.

(vi) This concrete dike vault system is not subject to hydraulic pressure as it is constructed above ground.

40 CFR 264.193 (f)

This section deals with Secondary Containment requirements for ancilliary equipment.

WISHMEIER & ASSOCIATES
Architects & Engineers
119 N. Taylor St.
SOUTH BEND, INDIANA 46601
(219) 234-3433

JOB SAFETY KLEEN - ELGIN, IL
SHEET NO. 1 OF 2
CALCULATED BY CLW DATE 8-8-89
CHECKED BY DATE
SCALE 20000 GAL VERTICAL TANK

DETERMINE FULL TANK LOAD ON SLAB & SOIL

GIVEN: MAX ALLOW. BEARING PRESSURE CONC = 750 PSI
" " " " SOIL = 3000 PSF
1/4" ⅊ STEEL = 10 PSF
CONCRETE WT = 150 PCF

20000 GAL STORAGE TANK:
24' TALL
2' SKIRT
12' DIAMETER
1/4" ⅊ STEEL

A. TANK WEIGHT

1. EMPTY TANK =

WALL = $\pi DH = (\pi)(12)(26) = 980$ SF
980 SF × 10 PSF = 9800#

TOP & BOTTOM = $\pi r^2 \times 2 = (\pi)(36)(2) = 226$ SF
226 SF × 10 PSF = 2260#

TOTAL TANK WT = 9800 + 2260 = 12060#

2. WEIGHT OF MINERAL SPIRITS =

USED MIN. SPIRITS = 6.64 #/GAL
20000 GAL × 6.64 = 132800#

3. TOTAL TANK + MIN SPIRITS = 12060 + 132800
= 144860#

WISTMEIER & ASSOCIATES
Architects & Engineers
119 N. Taylor St.
SOUTH BEND, INDIANA 46601
(219) 234-3433

JOB [illegible] - PEKIN, IL
SHEET NO. 1 OF 3
CALCULATED BY [illegible] DATE 3-10-89
CHECKED BY _____ DATE _____
SCALE _____

I DIKE RETAINING WALL DESIGN (4'-0" WALL)

A. LOADING CRITERIA

USE WATER @ 62.4 PCF. WATER IS HEAVIER THAN S-K CHEMICALS

B. LOADING DIAGRAM

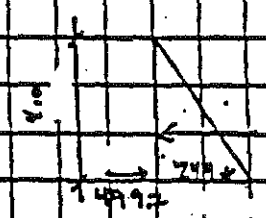

$F_y = 62.4 \times 4 \times 4 \times \frac{1}{2} = 499.2^{\#}$

$M @ base = 499.2 \times 4/3 = 665.6$ FT#
SHEAR = 499.2#

C. CONCRETE DIKEWALL DESIGN (SEE PRINTOUT)

WALL IS TO BE 8 in THICK
REBAR IN CENTER OF WALL,
THEREFORE d = 4 in
USE 3000 PSI CONCRETE (R = 2.26, j = .87,
fs = 20000, d = 4 in)

$d_{1min} = 1.72$ in < 4 in → OK
A_s req'd = 0.11 in²
USE 1-#4 @ 12" oc
A = 0.20 in²

SHEAR: $S_1 = 499.2^{\#}$, $V_1 = 104$ psi < 60 psi → OK

BEND: $B_1 = 499.2^{\#}$, $u_1 = 91.10$ psi < 500 psi → OK

USE #4 BARS @ 12 oc VERT
& #4 BARS @ 6" oc HORIZ.
$A_T = .0025 \times 8 \times 12 \times 0/12 = .20$ in²

WISHMEIER & ASSOCIATES
ARCHITECTS • ENGINEERS
119 N. TAYLOR STREET • SOUTH BEND, INDIANA 46601
(219) 234-3433

LETTER OF CERTIFICATION

October 11, 1990

To Whom It May Concern:

I, Charles Keith Wishmeier, P.E., have supervised the installation of Safety-Kleen Corporation's new above ground hazardous waste storage tank and auxiliary equipment at the Pekin, Illinois Service Center. My duties were the design and installation, inspection, testing for tightness and checking for corrosion protection for the following tank system components: the tank farm dike walls and concrete slab, the tanks, tank vent piping, tank fill and drain piping and pumps, as required by the Resource Conservation and Recovery Act (RCRA) regulations, 40 CFR 264.192, applicable paragraphs (a-g) and 40 CFR 264.193, applicable paragraphs (a-f).

I certify under penalty of law that I have personally examined and am familiar with the information submitted in this document and all attachments. Based on my inquiry of those individuals immediately responsible for obtaining the information, I believe that the information is true, accurate, and complete. I am aware that there are significant penalties for submitting false information, including the possibility of fine and imprisonment.

Charles Keith Wishmeier

Charles Keith Wishmeier, P.E.

Principal

Title

Illinois 062-044295

Registration Number

119 N. Taylor St., South Bend, IN 46601

Address

Exhibit E-7
Design Engineering Assessment of Used Antifreeze Tank System

DESIGN ASSESSMENT
USED ANTIFREEZE STORAGE TANK SYSTEM
SAFETY-KLEEN CORPORATION BRANCH
PEKIN, ILLINOIS

Facility No. 5-136-01

Prepared by:

QuesTec Corporation
4812 Santana Circle
Columbia, Missouri 65203
Project No. 9341.2

April 12, 1993

DESIGN ASSESSMENT

TABLE OF CONTENTS

Title	Page No.
Tank System Certification	*i*
System Description	1
Design Assessment	1
1. Design Standards	1
2. Hazardous Characteristics of the Waste	2
3. Corrosion Protection	2
4. Effects of Vehicular Traffic	2
5. Tank Foundation	3
6. Ancillary Equipment	3
Secondary Containment Assessment	3
1. Required Date	3
2. Compatibility of Construction Materials	3
3. Strength	4
4. Foundation	4
5. Leak Detection	4
6. Liquid Removal	4
7. Requirements for a Vault System	4
8. Ancillary Equipment	4
Conclusion of Assessment	5
Exhibits	
Appendix A - Design Documentation	
Appendix B - Design Review Documents	
Appendix C - Characteristics of Waste	

TANK SYSTEM CERTIFICATION

I have supervised the design assessment dated April 12, 1993 of the used antifreeze storage tank system at the Safety-Kleen Corporation facility in Pekin, Illinois. The EPA ID Number for the facility is ILD093862811.

With regard to this duty, I certify under penalty of law that this document and all attachments were prepared under my direction or supervision in accordance with a system designed to assure that qualified personnel properly gather and evaluate the information submitted. Based on my inquiry of the person or persons who manage the system, or those persons directly responsible for gathering the information, the information submitted is, to be the best of my knowledge and belief, true, accurate, and complete. I am aware that there are significant penalties for submitting false information, including the possibility of fine and imprisonment for knowing violations.

Rick A. Bartelt
Registered Professional Engineer
Illinois Registration Number 062-045992

QuesTec Corporation
4812 Santana Circle
Columbia, Missouri 65203

RICK A. BARTELT
062-045992
REGISTERED
PROFESSIONAL
ENGINEER
STATE OF ILLINOIS

4-12-93

This report documents the design assessment for a used antifreeze storage tank system at the Safety-Kleen facility in Pekin, Illinois. The assessment was conducted to address the requirements of 40 CFR 265.192, 40 CFR 265.193, and the corresponding requirements of the Illinois Rules and Regulations Title 35 Subtitle 35 Chapter I Part 724.292 and 293.

SYSTEM DESCRIPTION

Liquid used antifreeze is picked up from offsite generators by tank truck and brought to the Safety-Kleen Service Center where it will be transferred to a steel, above ground horizontal storage tank through a steel piping arrangement. Periodically, the waste will be transferred from this storage tank to a large tanker truck by which it is taken to a recycling facility. The accumulated sludge and solids are removed from the tank through the manway and taken offsite for disposal.

The storage tank will be a horizontal cylinder with flat ends having a capacity of 10,000 gallons. The tank will sit on three saddles in a rectangular structure that serves as secondary containment. The self contained tank will sit on three 8" WF beams.

The tank is vented to the atmosphere, and it is equipped with a gauge for daily liquid level readings and a liquid level alarm which provides both visual and audio alerts when the liquid level reaches 95% of the permitted capacity.

A site plan, a tank farm plan, and a system piping and instrumentation diagram can be found in the exhibit section, exhibits 1, 2 and 3 respectively.

DESIGN ASSESSMENT

1. Design Standards - [40 CFR 265.192(a)(1)]

   The design standards according to which the tank and ancillary equipment are to be constructed include the construction drawings provided by Safety-Kleen. See appendix A. The tank system design has been evaluated for compliance with the following codes:

   - Underwriters' Laboratory, UL 142, Standard for Steel Aboveground Tanks for Flammable and Combustible Liquids, 6th Edition.
   - National Fire Protection Association, NFPA 30, Flammable and Combustible Liquids Code Handbook, 1990 Edition.

- American Concrete Institute, ACI 318-89, Building Code Requirement for Reinforced Concrete.
- American Society of Civil Engineers ASCE Standard 7-88.
- American National Standards Institute, ANSI B31.3, Petroleum Refinery Piping.
- American Petroleum Institute, API 2000, Venting Atmospheric and Low Pressure Storage Tanks.

Design calculations and a point by point evaluation of the system with respect to the applicable codes are found in Appendix B.

The conclusion of the design review is that the tank system essentially conforms to the requirements of the applicable codes provided two minor items are included. The emergency vent should have a minimum capacity of 383,640 CFH. A bumper post needs to be added at the north west corner of the tank access container.

2. Hazardous characteristics of the waste - [40 CFR 265.192(a)(2)]

The waste to be stored is liquid automotive antifreeze. The antifreeze mainly consists of ethylene glycol and water. According to 40 CFR 261.21-24, the characteristics of a hazardous waste that need to be considered are ignitability, corrosivity, reactivity and EP toxicity. The only hazardous characteristic of the waste is EP toxicity. Test results of waste automotive antifreeze show that lead and perchloroethylene are typically present in concentrations exceeding the US EPA allowable limits. See Appendix C for the Used Antifreeze TCLP Data Report, the Material Safety Data Sheet for Recycled Ethylene Glycol, and other documentation describing the waste material.

3. Corrosion protection - [40 CFR 265.192(a)(3)]

The tank is above ground and does not have any direct contact with soil, therefore, no cathodic protection is required. The specifications require that the tank and pipe be protected by a paint system which calls for the exterior tank surface to be painted with a primer coat of Sherwin Williams Zinc Clad III, and an intermediate and finish coat of Sherwin Williams DTM acrylic gloss. A copy of the painting specification is included in Appendix A. The system components do not have any internal corrosion protection. Through research and experience, Safety-Kleen has determined that used antifreeze is compatible with the typical materials of construction used for the tank systems. See Safety-Kleen letter in Appendix C from Paul Dittmar, Manager of Process and Product Development. In addition to Safety-Kleen's experience, antifreeze has a proven track record to be noncorrosive in internal combustion engines. Therefore, the used antifreeze stored in the tank system should not be corrosive to the steel tanks and piping.

4. Effects of vehicular traffic - [40 CFR 265.192(a)(4)]

This is an above ground tank system and consequently will not be affected by vehicular traffic.

5. Tank Foundation - [40 CFR 265.192(a)(5)]

The tank foundation (concrete pad) is designed to support the gravity load of the full tank plus wind or earthquake loads. See calculations in Appendix B.

The tank is aboveground and is not located in the 100 year flood plain. Refer to the partial Flood Boundary and Floodway Map for County of Tazwell, Illinois (unincorporated areas) dated August 1, 1980, see Appendix A.

Consequently, it does not require anchorage to prevent flotation or dislodgement. Additionally, the wind and earthquake analyses do not indicate that the tanks require anchorage. See calculations in Appendix B.

According to City Planning and Zoning in Pekin, Illinois, the generally accepted depth for frost penetration is 36 inches. The tank pad design as shown in Section 1, Safety-Kleen Drawing No. 515, dated July 1, 1992 (see Appendix A) places the foundation (at the edge of the tank pad) 2'-0" below "finished" grade. With 1'-0" of granular fill beneath the foundation, a total of 36" of depth is provided for frost penetration which is adequate per local code.

Based on our review of the design documents and available information, it appears that the tank foundation is adequately designed to avoid major distress or loss of structural integrity.

6. Ancillary equipment - [40 CFR 265.192(5)(e)]

The piping is to be supported at a minimum of every eight feet ensuring its protection against excessive stress due to settlement, vibration, expansion or contraction and is to be protected from vehicular traffic by concrete filled steel bumper posts.

SECONDARY CONTAINMENT SYSTEM ASSESSMENT

1. Required date - [40CFR 265.193(a)(1)]

Since the tank system will be new, secondary containment is required prior to it being put into service.

2. Compatibility of the construction materials with antifreeze - [40 CFR 265.193(c)(1)]

As previously addressed, antifreeze should be compatible with and not corrosive to the materials of construction which are mainly carbon steel and concrete, See Appendix C for documentation.

3. Strength - [40 CFR 265.193(c)(1)]

The calculations in Appendix B show that the tank slab should have sufficient strength to support the weight of the full tanks.

The tank's containment structure is to be UL approved. The UL approval process includes an evaluation of the hydrostatic loading of the containment walls.

The secondary containment system is above ground and should not be affected by vehicular traffic.

4. Foundation - [40 CFR 265.193(c)(2)]

The foundation should to be capable of supporting the tank system as shown in Appendix B.

5. Leak detection - [40 CFR 265.193(c)(3)]

The tank system and the secondary containment system are visually inspected on a daily basis for the presence of any release of hazardous waste or accumulated liquid in the secondary containment.

6. Liquid removal - [40 CFR 265.193(c)(4)]

The liquid is removed from the secondary containment with a portable pump or with a vacuum truck.

7. Requirements for a vault system - [40 CFR 265.193(e)(2)]

(i) The secondary containment system has sufficient design capacity to contain 100
(ii) percent of the capacity of the largest tank. See Appendix B. The containment is covered, therefore prevents accumulation of precipitation.

(iii) There are no joints in the containment structure.

(iv) The containment structure is made of carbon steel which is compatible with the antifreeze and should be water tight.

(v) The containment has rain shielded vents for natural ventilation, and antifreeze is neither ignitable or reactive.

(vi) The secondary containment is not subject to external hydrostatic pressure, therefore it does not need to be provided with an exterior moisture barrier or be otherwise designed or operated to prevent migration of moisture into it.

8. Ancillary equipment - [40 CFR 265.193(f)]

All of the piping will be welded. The valves will be contained in the tank access container.

CONCLUSION OF ASSESSMENT

Per the information contained in this report and provided the two items identified in the design review are taken care of, the used antifreeze tank system at the Safety-Kleen Branch in Pekin, Illinois appears to be adequately designed including structural strength and compatibility with the wastes being stored. The secondary containment appears to be designed to prevent migration of wastes or accumulated liquid out of the system. It appears that the tank system will be in compliance with 40 CFR 265.192, 265.193.

EXHIBITS

Title	Exhibit No.
Site Plan	1
Tank Farm Plan	2
System Schematic	3

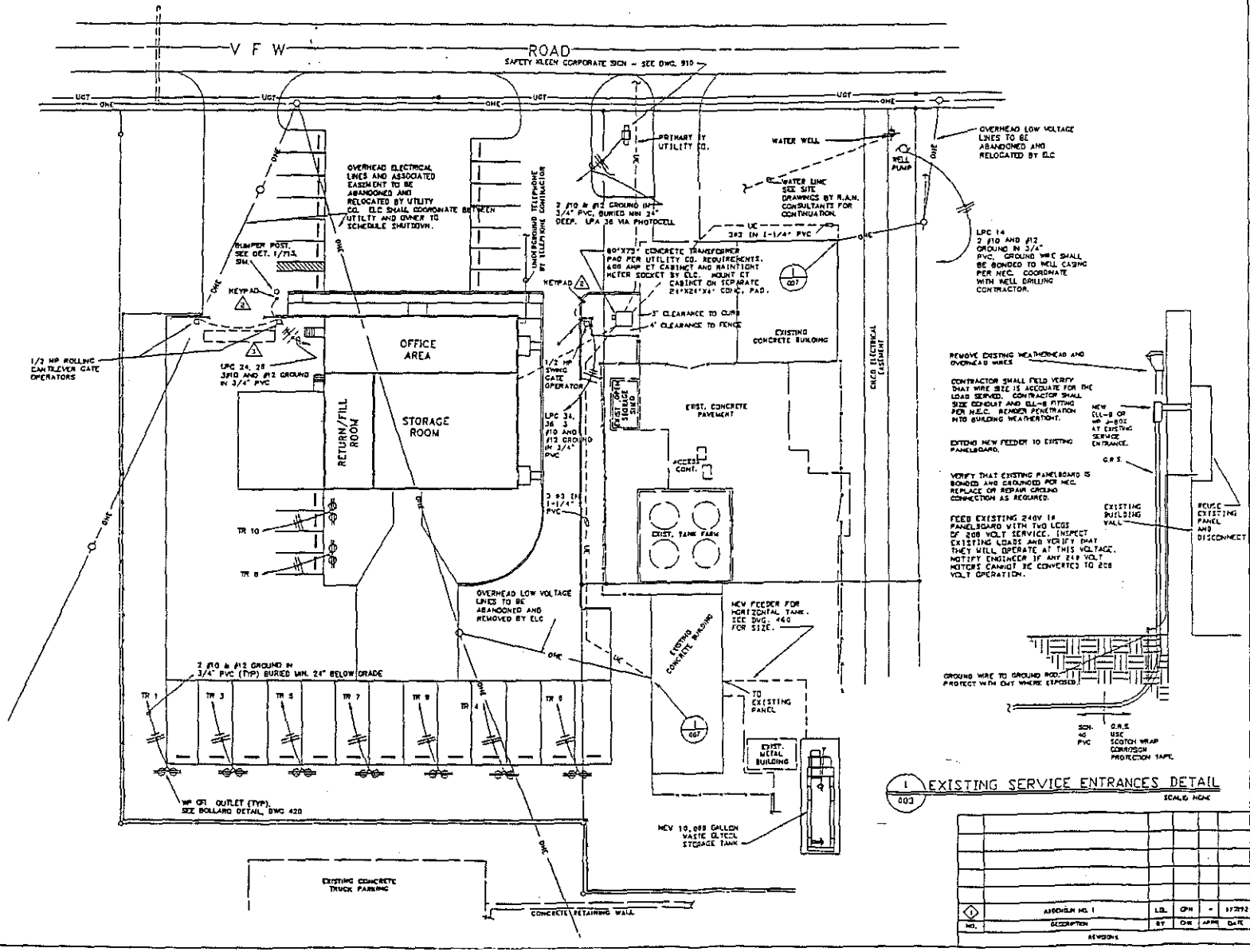

1 EXISTING SERVICE ENTRANCES DETAIL
003
SCALE: NONE

GENERAL NOTES

THIS DRAWING CONTAINS INFORMATION PROPRIETARY TO SAFETY-KLEEN CORPORATION. ANY REPRODUCTION, DISCLOSURE OR USE OF THIS DRAWING IS EXPRESSLY PROHIBITED EXCEPT BY SAFETY-KLEEN OR AS SAFETY-KLEEN MAY AGREE IN WRITING.

1. ALL EXISTING UNDERGROUND UTILITIES SHOWN HAVE BEEN PLOTTED FROM AVAILABLE INFORMATION AND THEIR LOCATIONS MUST BE CONSIDERED APPROXIMATE ONLY. THE VERIFICATION OF ALL UTILITIES SHOWN OR NOT SHOWN SHALL BE THE RESPONSIBILITY OF THE CONTRACTOR AND SHALL BE LOCATED PRIOR TO ANY GRADING OR CONSTRUCTION OF IMPROVEMENTS.
2. COORDINATE EXACT KEYPAD LOCATIONS WITH BRANCH MANAGER.
3. INDICATES LOCATION OF DETECTION LOOP. INSTALL PER MANUFACTURER'S REQUIREMENTS. COORDINATE WITH OTHER CONTRACTORS. NOT TO SCALE.
4. ELECTRICAL CONTRACTOR SHALL INSTALL ALL POWER AND CONTROL WIRING FOR ELECTRICALLY OPERATED GATES AND RUN FEEDERS AND CONTROL WIRING BACK TO MAIN BUILDING.
5. ALL JUNCTION BOXES AND RECEPTACLES MOUNTED OUTDOORS SHALL BE WEATHERPROOF AND GFI PROTECTED.
6. ALL ELECTRICAL CONDUIT ON THIS DRAWING SHALL BE SCHEDULE 40 PVC UNLESS OTHERWISE NOTED. MINIMUM DEPTH OF BURIAL SHALL BE 24" BELOW GRADE.
7. CONTROL STATION FOR ELECTRICALLY OPERATED GATES SHALL BE INSTALLED IN THE CLERICAL OFFICE. EXACT LOCATION TO BE DETERMINED BY BRANCH MANAGER.
8. CONTRACTOR SHALL MINIMIZE INTERRUPTION OF UTILITIES TO EXISTING BUILDINGS. SCHEDULE SWITCHING FROM EXISTING ELECTRICAL SERVICE TO NEW ELECTRICAL SERVICE AT LEAST SEVEN DAYS IN ADVANCE WITH BRANCH MANAGER. THE BRANCH MANAGER MAY REQUIRE SERVICE TO BE SWITCHED OUTSIDE OF NORMAL WORKING HOURS TO MINIMIZE INTERRUPTION TO BUSINESS.
9. INSTALL 600 AMP WP CT CABINET AND UTILITY METER ADJACENT TO PADMOUNTED TRANSFORMER. SUPPORT AS REQUIRED ON CONC. PAD.
10. GATE OPERATORS, KEY PADS, DETECTION LOOPS AND OTHER ACCESSORIES TO BE FURNISHED BY GATE MANUFACTURER AND INSTALLED BY ELC. SEE SITE DRAWINGS.

QUESTEC

TITLE: SITE ELECTRICAL PLAN

SAFETY-KLEEN CORP.

NO.	DESCRIPTION	BY	CHK	APPR	DATE
1	ADDENDUM NO. 1	LDL	CPH	-	1/7/93

REVISIONS

SCALE 1" = 20'-0"	BY Quantec	CHKD	P.C. APPR	CP. APPR
SERVICE CENTER LOCATION: PEKIN, IL		SC-DWG-REV NO. MF06-007-0		DATE 7-01-92 SHEET NO. 3

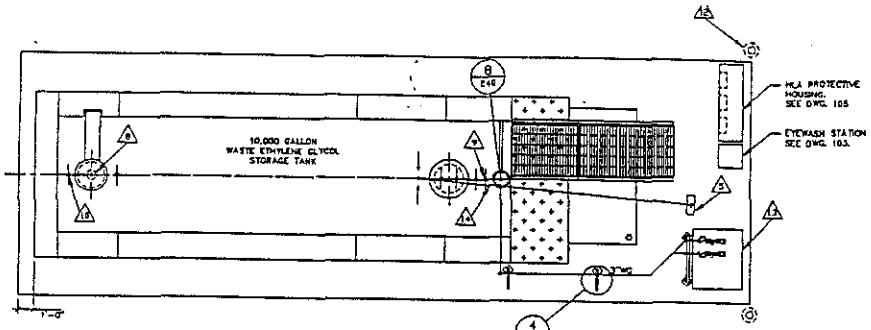

PIPING PLAN

SCALE: 1/4" = 1'-0"

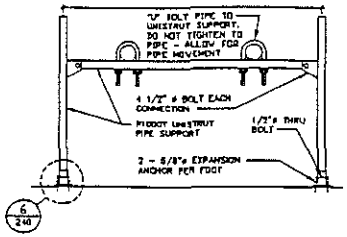

5 PIPE SUPPORT DETAIL TYPICAL

SCALE: 3/4" = 1'-0"

MARK	PART DESCRIPTION	MANUFACTURER MODEL NUMBER	REMARKS
1	3" FLANGED CAMLOCK COUPLING WITH CAP AND CHAIN		
2	3" CAST STEEL BALL VALVE		FURNISH WITH LOCKABLE HANDLE
3	3" 150# CAST STEEL SWING CHECK VALVE		
4	TANK LEVEL GAUGE		SEE DETAILS, DWG. 242
5	3" NORMAL VENT		SP= 2oz., PRESSURE, 1oz., VACUUM

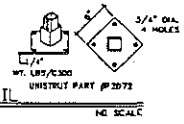

6 DETAIL

NO SCALE

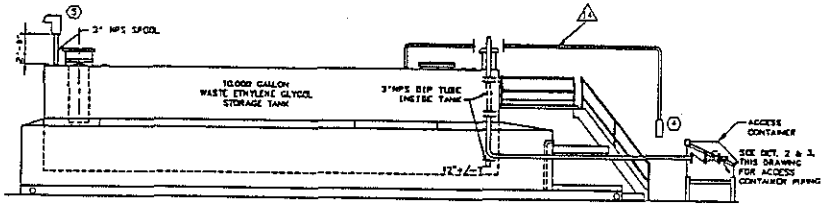

9 WASTE GLYCOL PIPING - ELEVATION

SCALE: 1/4" = 1'-0"

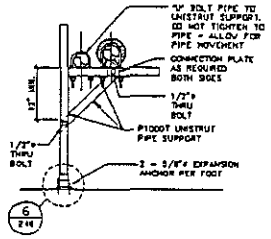

4 PIPE SUPPORT DETAIL TYPICAL

SCALE: 3/4" = 1'-0"

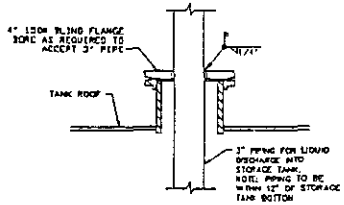

8 TANK DOME PIPING PENETRATION DETAIL

SCALE: NONE

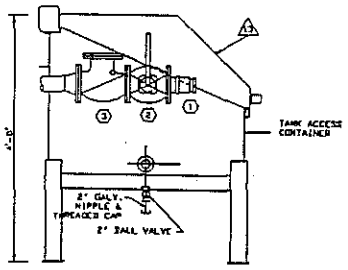

2 ACCESS CONTAINER DETAIL - ELEVATION

SCALE: NONE

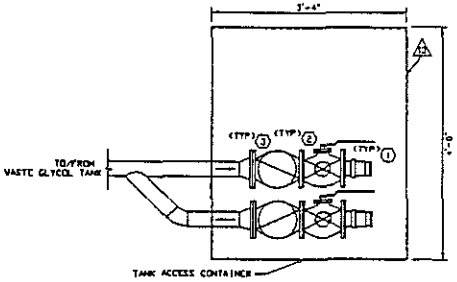

3 ACCESS CONTAINER PIPING DETAIL - PLAN

SCALE: NONE

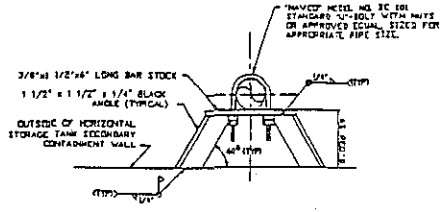

7 TANK PIPE SUPPORT DETAIL

SCALE: NONE

GENERAL NOTES

THIS DRAWING CONTAINS INFORMATION PROPRIETARY TO SAFETY-KLEEN CORPORATION. ANY REPRODUCTION, DISCLOSURE OR USE OF THIS DRAWING IS EXPRESSLY PROHIBITED EXCEPT BY SAFETY-KLEEN OR AS SAFETY-KLEEN MAY AGREE, IN WRITING.

1. SEE DWG. 101 FOR STORAGE TANK DETAILS.
2. ALL PIPING SHALL BE ASTM A53, GR.B, MINIMUM.
3. ALL CHANGES IN PIPING DIRECTION SHALL BE MADE USING 2 45 ELBOWS OR LONG RADIUS 90s.
4. ALL PROCESS PIPING CONNECTIONS OUTSIDE CONTAINMENT SHALL BE WELDED.
5. TANK LEVEL GAUGE. SEE DWG. 242.
6. FIELD WELD PIPE SUPPORT TO TANK AS REQUIRED. SEE DET. 7, THIS DWG.
7. SUPPORT PIPING AS SHOWN, BUT NOT MORE THAN 8'-0" O.C. UNLESS OTHERWISE NOTED.
8. INSTALL EMERGENCY VENT FURNISHED WITH TANK.
9. INSTALL OWNER FURNISHED HIGH LEVEL ALARM PROBE.
10. INSTALL NORMAL TANK VENT.
11. PAINT PIPING PER SPECIFICATIONS.
12. TYPICAL BUMPER POST. SEE DET. 2, DWG. 515.
13. INSTALL OWNER FURNISHED ACCESS CONTAINER.
14. INSTALL LEVEL GAUGE PIPING PLUMB AND LEVEL.

QUESTEC

TITLE

TANK FARM PIPING PLAN AND DETAILS

SAFETY-KLEEN CORP.

NO.	DESCRIPTION	BY	CHK	APPR	DATE
1	ADDENDUM NO. 1	WJG	GPH	-	1/7/2002

REVISIONS

SCALE	BY	CHKD	P.E. APPR	OP. APPR	DATE
1/4" = 1'-0"	Questec				7-1-02
SERVICE CENTER LOCATION: PEKIN, IL			SC-INC-REV NO. WF06-240-0		SHEET NO. 59

8-1-02 3:00pm 2:30 DWG

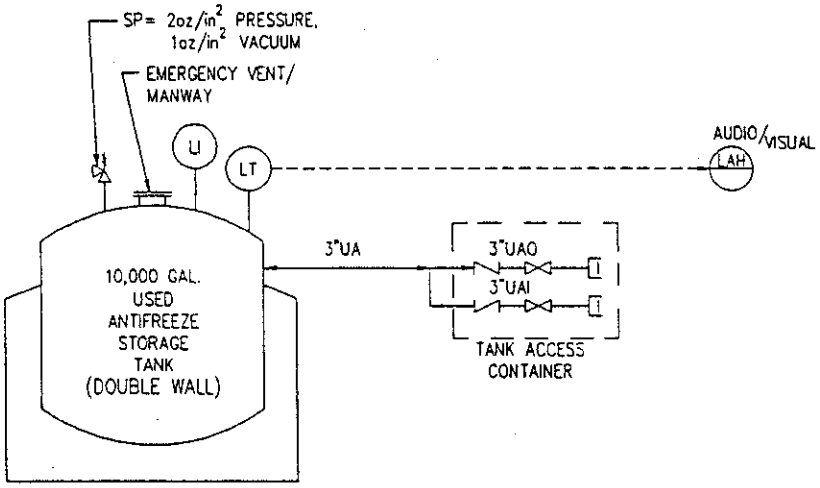

LEGEND

- pump
- field instrumentation
- panel or wall mounted instrumentation
- gate valve
- ball valve
- check valve
- press/vac vent
- suction strainer
- flexible hose
- cam-lock fitting
- process piping
- control wiring

LI – level indicator
LT – level transmitter
LAH – level alarm–high
UMS – used mineral spirits in
UMS – used mineral spirits out
UAI – used antifreeze in
UAO – used antifreeze out

PIPING AND INSTRUMENTATION DIAGRAM

USED ANTIFREEZE TANK SYSTEM DESIGN ASSESSMENT

FOR SAFETY–KLEEN SERVICE CENTER AT PEKIN, IL.

AWN BY : TYJ
TE : 4-7-93
ECKED BY: RAB
TE : 4-8-93

QUESTEC CORPORATION
CONSULTING ENGINEERS
4812 Santana Circle • Columbia • MO 65203 • (314) 875-0260

EXHIBIT
3

APPENDIX A

Design Documentation

APPENDIX A

Design Documentation

The following drawings provided by Safety-Kleen describing the used antifreeze tank system design, and other design data, were used in the design assessment.

Title	Page No.
Site Layout Plan, MF06-002-0	A-1
Site Electrical Plan, MF06-007-0	A-2
Horizontal Tank Pad Partial Site Plan and Details, MF06-515-0	A-3
10,000 Gallon Horizontal Storage Tank, MF06-101-0	A-4
Tank Farm Piping Plan and Details, MF06-240-0	A-5
Varec Gauge Details for Horizontal Tank, MF06-242-0	A-6
Tank Farm Electrical Plans, MF06-460-0	A-7
Tank Farm Sign Location and Details, MF06-915-0	A-8
Antifreeze/Oil Tank HLA System Diagram, 4501	A-9
Painting Specification	A-10
Process Piping Specification	A-19
Horizontal Tank and Pipe Testing Specification	A-22
Partial Flood Plain Map, Panel #1708150100B	A-25

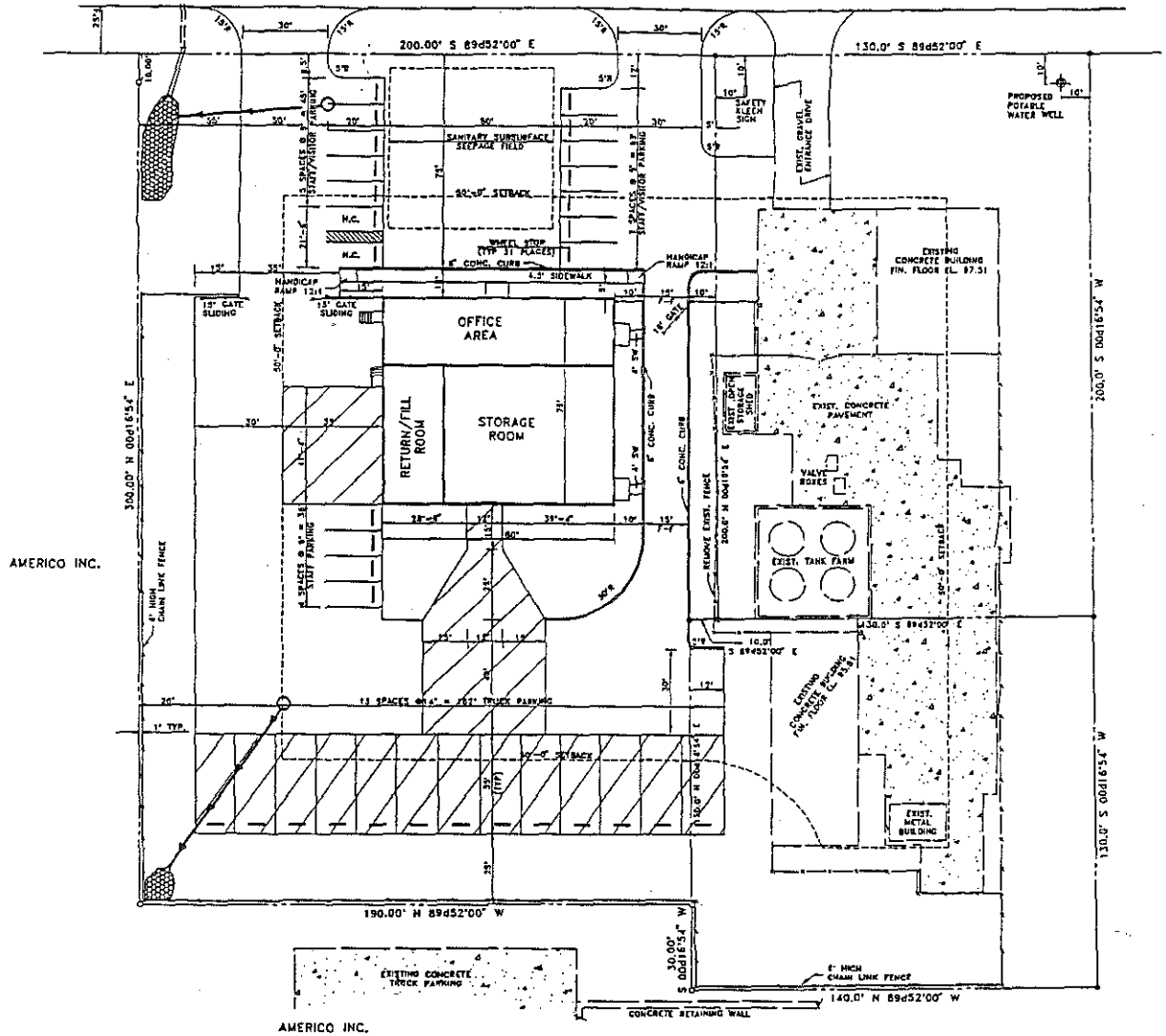

SITE LAYOUT PLAN

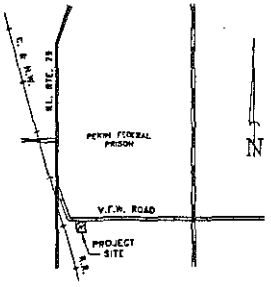

VICINITY MAP

NO SCALE

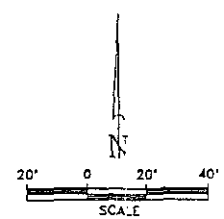

1. EXISTING IMPROVEMENTS, CONTOURS, ELEVATIONS AND SITE CONDITIONS ARE PER TOPOGRAPHIC AND BOUNDARY SURVEY COMPLETED BY KLIEN LAND SURVEYING FOR SAFETY-KLEEN CORP. ON 1-23-89 AND REVISED 3-18-89.

LEGEND

- EXISTING CONCRETE PAVEMENT
- PROPOSED CONCRETE PAVEMENT
- PROPOSED ASPHALT
- PROPOSED 6" CURB

R.A.N. CONSULTANTS, INC.
engineers land surveyors

NO.	DESCRIPTION	BY	CHK	APPR	DATE
	REVISIONS				

TITLE

SITE LAYOUT PLAN

SAFETY-KLEEN CORP.

SCALE	BY	CHKD	P.E. APPR	OP. APPR	DATE
1"=20'-0"	SPF	JDS	JDS		7-1-92

SERVICE CENTER LOCATION	SC-DWG-REV NO.	SHEET NO.
PEKIN, IL.	MF06-002-0	2A

08-03-92 11:15AM MF06002D.DWG

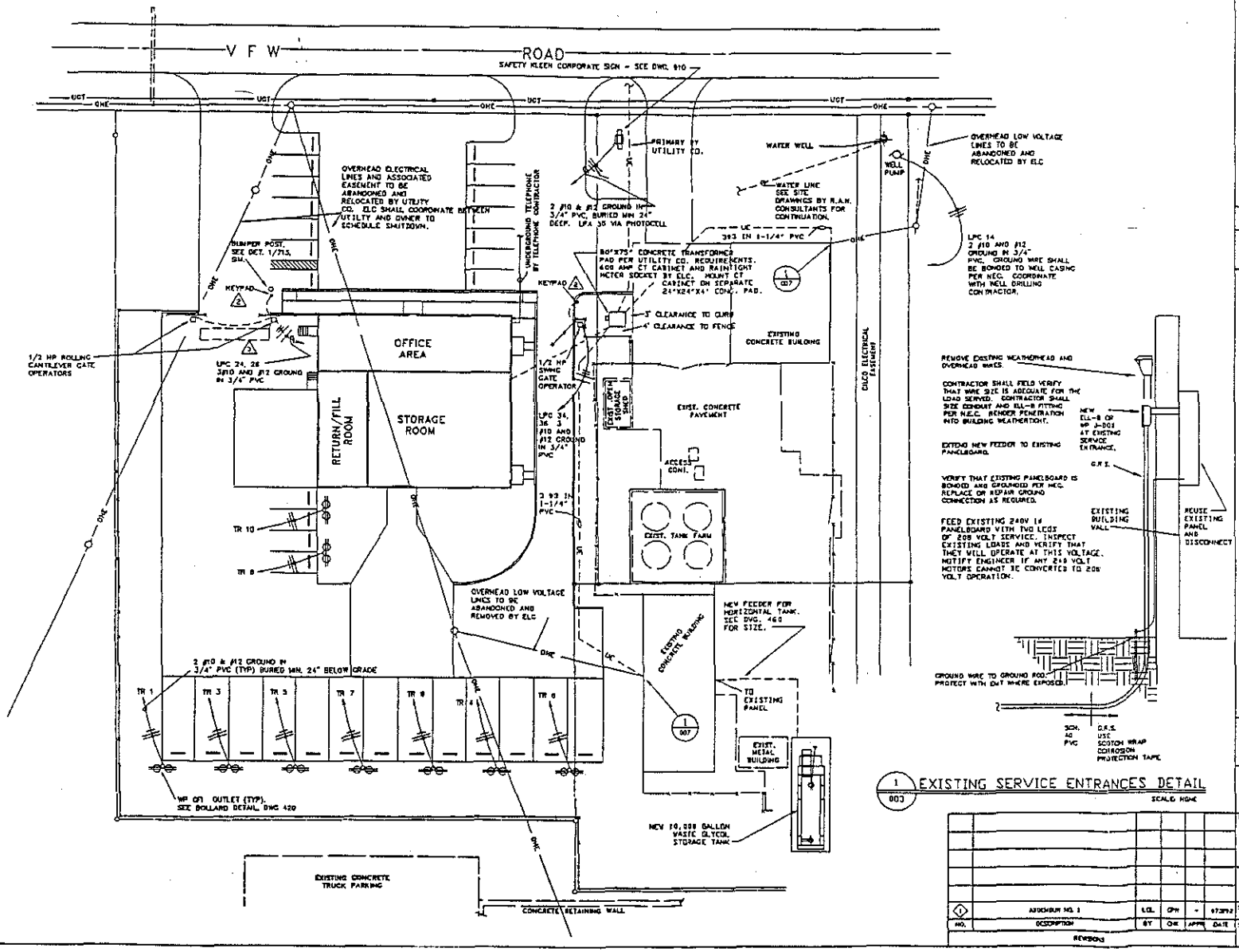

1 / 003 EXISTING SERVICE ENTRANCES DETAIL

SCALE NONE

NEW BUILDING CALCULATED DEMAND: 138 KVA AT 208 Y 3# 383 AMPS

NORTHEAST BUILDING DEMAND (FROM CILCO DEMAND METERING RECORDS) 13.9 KVA AT 240V 1 # 37.5 AMPS

SOUTHEAST BUILDING DEMAND (FROM CILCO DEMAND METERING RECORDS) 5.1 KVA AT 240V 1# 21.25 AMPS

TOTAL, ALLOWING FOR UNBALANCED LOAD: (FIGURE REPRESENTS CURRENT IN THE LEG WITH THE MOST UNBALANCE) 467.75 AMPS AT 208V 3# EQUIVALENT TO 169 KVA

GENERAL NOTES

THIS DRAWING CONTAINS INFORMATION PROPRIETARY TO SAFETY-KLEEN CORPORATION. ANY REPRODUCTION, DISCLOSURE OR USE OF THIS DRAWING IS EXPRESSLY PROHIBITED EXCEPT BY SAFETY-KLEEN OR AS SAFETY-KLEEN MAY AGREE IN WRITING.

1. ALL EXISTING UNDERGROUND UTILITIES SHOWN HAVE BEEN PLOTTED FROM AVAILABLE INFORMATION AND THEIR LOCATIONS MUST BE CONSIDERED APPROXIMATE ONLY. THE VERIFICATION OF ALL UTILITIES SHOWN OR NOT SHOWN SHALL BE THE RESPONSIBILITY OF THE CONTRACTOR AND SHALL BE LOCATED PRIOR TO ANY GRADING OR CONSTRUCTION OF IMPROVEMENTS.

2. COORDINATE EXACT KEYPAD LOCATIONS WITH BRANCH MANAGER.

3. INDICATES LOCATION OF DETECTION LOOP. INSTALL PER MANUFACTURER'S REQUIREMENTS. COORDINATE WITH OTHER CONTRACTORS. NOT TO SCALE.

4. ELECTRICAL CONTRACTOR SHALL INSTALL ALL POWER AND CONTROL WIRING FOR ELECTRICALLY OPERATED GATES AND RUN FEEDERS AND CONTROL WIRING BACK TO MAIN BUILDING.

5. ALL JUNCTION BOXES AND RECEPTACLES MOUNTED OUTDOORS SHALL BE WEATHERPROOF AND GFI PROTECTED.

6. ALL ELECTRICAL CONDUIT ON THIS DRAWING SHALL BE SCHEDULE 40 PVC UNLESS OTHERWISE NOTED. MINIMUM DEPTH OF BURIAL SHALL BE 24" BELOW GRADE.

7. CONTROL STATION FOR ELECTRICALLY OPERATED GATES SHALL BE INSTALLED IN THE CLERICAL OFFICE. EXACT LOCATION TO BE DETERMINED BY BRANCH MANAGER.

8. CONTRACTOR SHALL MINIMIZE INTERRUPTION OF UTILITIES TO EXISTING BUILDINGS. SCHEDULE SWITCHING FROM EXISTING ELECTRICAL SERVICE TO NEW ELECTRICAL SERVICE AT LEAST SEVEN DAYS IN ADVANCE WITH BRANCH MANAGER. THE BRANCH MANAGER MAY REQUIRE SERVICE TO BE SWITCHED OUTSIDE OF NORMAL WORKING HOURS TO MINIMIZE INTERRUPTION TO BUSINESS.

9. INSTALL 600 AMP VP CT CABINET AND UTILITY METER ADJACENT TO PADMOUNTED TRANSFORMER. SUPPORT AS REQUIRED ON CONC. PAD.

10. GATE OPERATORS, KEY PADS, DETECTION LOOPS AND OTHER ACCESSORIES TO BE FURNISHED BY GATE MANUFACTURER AND INSTALLED BY ELC. SEE SITE DRAWINGS.

VESTEC

NO.	DESCRIPTION	BY	CHK	APPR	DATE
1	ADDENDUM NO. 1	LCL	CPH	-	6/23/92

REVISIONS

TITLE: SITE ELECTRICAL PLAN

SAFETY-KLEEN CORP.

SCALE	BY	CHKD	P.E. APPR	OP. APPR	DATE
1" = 20'-0"	Quasi Eng				7-01-92

SERVICE CENTER LOCATION: PEKIN, IL

SC-DWG-REV NO.: MF06-007-0

SHEET NO. 3

3-1-92 5:00am MFD0070.DWG

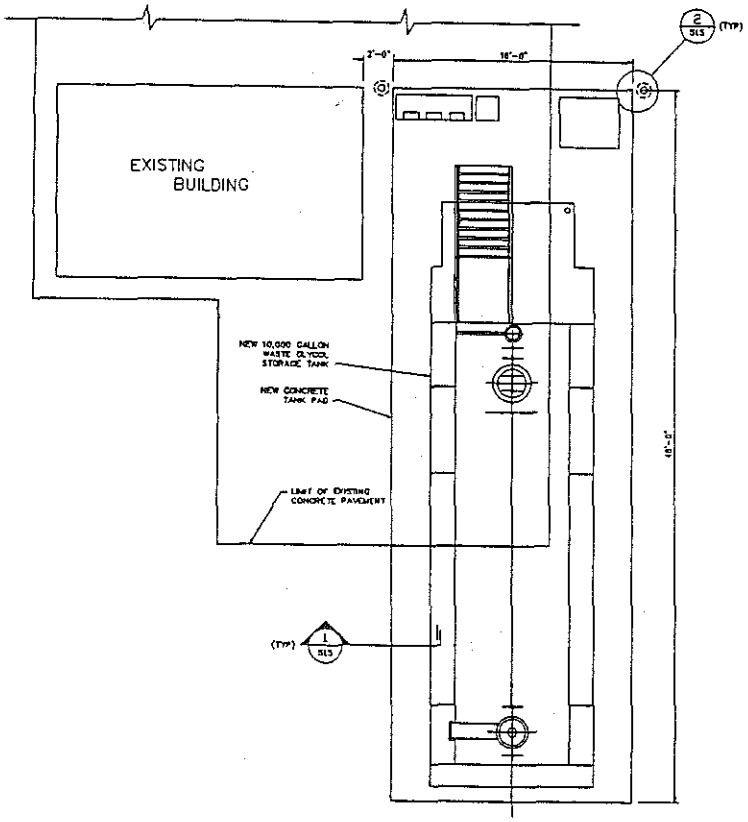

PARTIAL SITE PLAN
SCALE: 1/4" = 1'-0"

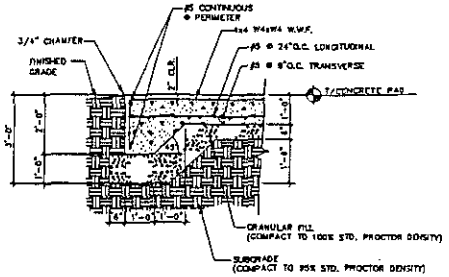

1 / 515 TANK PAD SECTION (TYPICAL)
SCALE: 1/2" = 1'-0"

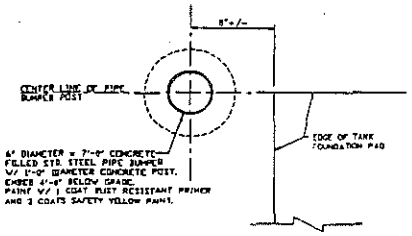

2 / 515 BUMPER POST DETAIL
NO SCALE

GENERAL NOTES

THIS DRAWING CONTAINS INFORMATION PROPRIETARY TO SAFETY-KLEEN CORPORATION. ANY REPRODUCTION, DISCLOSURE OR USE OF THIS DRAWING IS EXPRESSLY PROHIBITED EXCEPT BY SAFETY-KLEEN OR AS SAFETY-KLEEN MAY AGREE IN WRITING.

1. SAWCUT AND PATCH EXISTING CONCRETE PAVEMENT AS REQUIRED TO EXCAVATE AND INSTALL NEW CONCRETE PAD. USE 3/4" EXPANSION JOINT FILLER MATERIAL WITH APPROPRIATE BACKER ROD AND SEALANT. INSTALL JOINT BETWEEN NEW AND EXISTING CONCRETE SIMILAR TO DET. 6, DWG. 510.
2. CONCRETE PAD SHALL BEAR ON UNDISTURBED SOIL. NOTIFY ENGINEER OF ANY QUESTIONABLE SOIL CONDITIONS. ASSUMED SOIL BEARING PRESSURE=2500PSF.
3. ALL CONCRETE WORK SHALL CONFORM TO THE REQUIREMENTS OF ACI 301, 315 AND 318 LATEST EDITIONS. FOLLOW ACI RECOMMENDATIONS FOR COLD AND HOT WEATHER CONDITIONS.
4. ALL CONCRETE WORK SHALL BE COVERED WITH BURLAP AND KEPT CONTINUOUSLY MOIST FOR A MINIMUM PERIOD OF FIVE DAYS.
5. MINIMUM CONCRETE COVER FOR REINFORCEMENT SHALL BE 3" FOR CONCRETE CAST AGAINST SOIL AND 2" FOR CONCRETE EXPOSED TO WEATHER.
6. ALL CONCRETE SHALL HAVE MINIMUM COMPRESSIVE STRENGTH = 4000 P.S.I. AT 28 DAYS WITH MAX. SIZE AGGREGATE = 1 1/2" AND ENTRAINED AIR = 4-6%.
7. ALL REBAR SHALL BE GRADE 60 BILLET STEEL CONFORMING TO ASTM A-615.
8. TOP OF NEW CONCRETE PAD ELEVATION TO MATCH TOP OF EXISTING CONCRETE PAVEMENT ELEVATION AT NORTHEAST CORNER OF EXISTING RTN/FILL BUILDING.

QUESTEC CONSULTING ENGINEERS

TITLE: HORIZONTAL TANK PAD PARTIAL SITE PLAN AND DETAILS

SAFETY-KLEEN CORP.

NO.	DESCRIPTION	BY	CHK	APPR	DATE
1	ADDENDUM NO. 1	WJG	GPR	-	9/7/92

REVISIONS

SCALE	BY	CHKD	P.E. APPR	OP. APPR	DATE
1/4" = 1'-0"	QuesTec				07-1-92

SERVICE CENTER LOCATION	SC-DWG-REV NO.	SHEET NO.
PEKIN, IL	MF06-515-0	54

8-1-92 9:00am 5150.DWG

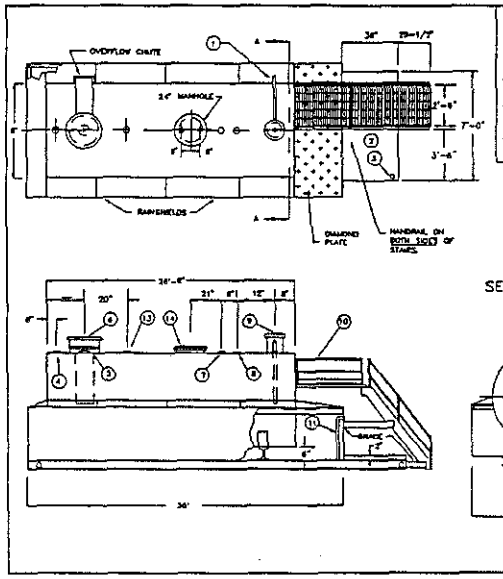

COMPANY NAME

APPROVED BY (PLEASE PRINT)

APPROVAL SIGNATURE

DATE CONTRACT NO.

NOTES :

1. SHELL: 1/4", HEADS: 3/16" CONTAINMENT: 1/4"
2. MATERIAL – MILD CARBON STEEL
3. TEST – 3 PSIG
4. ENTIRE UNIT IS VENTED, NOT JUST PRIMARY TANK.
5. PAINT – RED PRIMER (STANDARD).
6. FOR FURTHER INFORMATION CALL 1-800-242-1736 OR FAX (316) 284-0903

ITEM #	DESCRIPTION
1	1" FILL BOX OVERFLOW PIPE
2	PUMP PLATFORM 8/2" UP
3	1/2" DRAIN FITTING
4	3" VENT FITTING
5	8" – 8 oz EMERGENCY VENT – SHIPPED LOOSE
6	VENT DEFLECTOR ASSEMBLY SHIPPED LOOSE
7	3" POPLE
8	3" FITTING
9	OVERFILL CONTAINMENT CHAMBER WITH 2" FILL FITTING
10	STAIRS, PLATFORM AND HANDRAIL – DESIGNED TO OSHA REQUIREMENTS SHIPPED LOOSE
11	3/4" PUMPOUT PIPE W/ 3" PIPE CAP SUMP
12	1" PIPE UNION
13	4" FITTING
14	(2) 2" FITTING

AREO-POWER®

TITLE 10,000 GAL. FUELER

REV 1 REV DATE

U.S. PATENT # (MANUFT.) CANADIAN PATENT APPLIED FOR

AGENT NAME | DATE 8/18/91 | DRAWN BY JF | DWG. NO. UL10096

GENERAL NOTES

THIS DRAWING CONTAINS INFORMATION PROPRIETARY TO SAFETY-KLEEN CORPORATION. ANY REPRODUCTION, DISCLOSURE OR USE OF THIS DRAWING IS EXPRESSLY PROHIBITED EXCEPT BY SAFETY-KLEEN OR AS SAFETY-KLEEN MAY AGREE IN WRITING.

1. THIS DRAWING IS ISSUED FOR REFERENCE PURPOSES ONLY.
2. ROOF MANWAY – 24" DIAMETER MANWAY W/GASKET CEMENTED TO LID ONLY. INSTALL USING 12 – 1/2" x 4" LONG SHOULDER BOLTS. EVERY OTHER BOLT HOLE W/BOLTS THREADED TO NUT DEPTH ONLY. NO OTHER BOLTS TO BE USED. PLACE LABEL ON LID AS INDICATED
3. PROVIDE 24 SHORT BOLTS FOR MANWAY, TO BE USED DURING TANK PIPE PRESSURE TESTING (SEE SPECS)
4. TANK IS PROVIDED BY SAFETY-KLEEN & INSTALLED BY CONTRACTOR.
5. TANK AND STEEL SUPPORTS TO BE PAINTED PER SPECIFICATIONS.

QUESTEC

NO.	DESCRIPTION	BY	CHK	APPR	DATE
1	ASSEMBLY NO. 1	V.G.	CPH	–	8/21/92

REVISIONS

TITLE

10,000 GALLON HORIZONTAL STORAGE TANK

SAFETY-KLEEN CORP.

SCALE	BY	CHKD	P.E. APPR	OP. APPR	DATE
AS SHOWN	Questec				7-1-92

SERVICE CENTER LOCATION: PEKIN, IL

SC-DWG-REV NO.: MF06-101-0

SHEET NO.: 55

5-1-92 5:00am 10KG.DWG

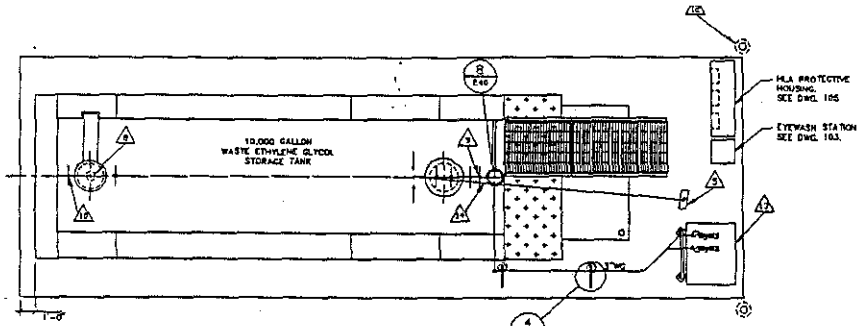

PIPING PLAN
SCALE: 1/4" = 1'-0"

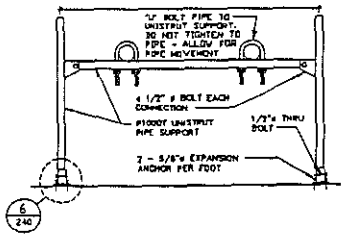

5 240 PIPE SUPPORT DETAIL TYPICAL
SCALE: 3/4" = 1'-0"

MARK	PART DESCRIPTION	MANUFACTURER MODEL NUMBER	REMARKS
1	3" FLANGED CAMLOCK COUPLING WITH CAP AND CHAIN		
2	3" CAST STEEL BALL VALVE		FURNISH WITH LOCKABLE HANDLE
3	3" 150# CAST STEEL SWING CHECK VALVE		
4	TANK LEVEL GAUGE		SEE DETAILS. DWG. 242
5	3" NORMAL VENT		3P# Zm. PRESSURE, 1oz. VACUUM

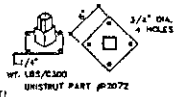

6 240 DETAIL
NO SCALE

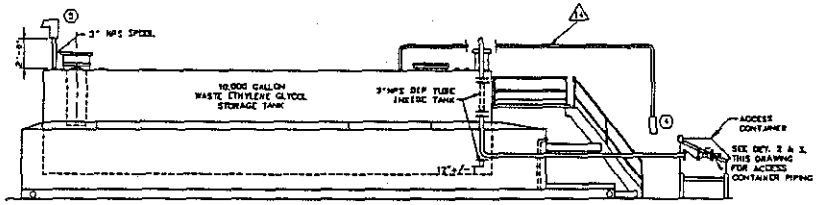

9 240 WASTE GLYCOL PIPING - ELEVATION
SCALE: 1/4" = 1'-0"

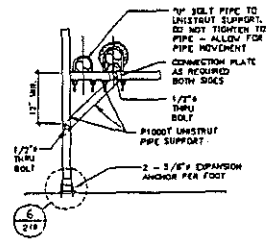

4 240 PIPE SUPPORT DETAIL TYPICAL
SCALE: 3/4" = 1'-0"

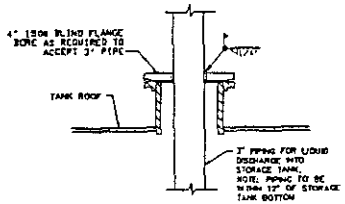

8 240 TANK DOME PIPING PENETRATION DETAIL
SCALE: NONE

GENERAL NOTES

THIS DRAWING CONTAINS INFORMATION PROPRIETARY TO SAFETY-KLEEN CORPORATION. ANY REPRODUCTION, DISCLOSURE OR USE OF THIS DRAWING IS EXPRESSLY PROHIBITED EXCEPT BY SAFETY-KLEEN OR AS SAFETY-KLEEN MAY AGREE IN WRITING.

1. SEE DWG. 101 FOR STORAGE TANK DETAILS.
2. ALL PIPING SHALL BE ASTM A53, G.B. MINIMUM.
3. ALL CHANGES IN PIPING DIRECTION SHALL BE MADE USING 2 45° ELBOWS OR LONG RADIUS 90s.
4. ALL PROCESS PIPING CONNECTIONS OUTSIDE CONTAINMENT SHALL BE WELDED.
5. TANK LEVEL GAUGE. SEE DWG. 242.
6. FIELD WELD PIPE SUPPORT TO TANK AS REQUIRED. SEE DET. 7, THIS DWG.
7. SUPPORT PIPING AS SHOWN, BUT NOT MORE THAN 8'-0" O.C. UNLESS OTHERWISE NOTED.
8. INSTALL EMERGENCY VENT FURNISHED WITH TANK.
9. INSTALL OWNER FURNISHED HIGH LEVEL ALARM PROBE.
10. INSTALL NORMAL TANK VENT.
11. PAINT PIPING PER SPECIFICATIONS.
12. TYPICAL BUMPER POST. SEE DET. 2, DWG. 515.
13. INSTALL OWNER FURNISHED ACCESS CONTAINER.
14. INSTALL LEVEL GAUGE PIPING PLUMB AND LEVEL.

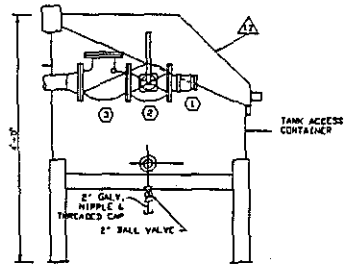

2 240 ACCESS CONTAINER DETAIL - ELEVATION
SCALE: NONE

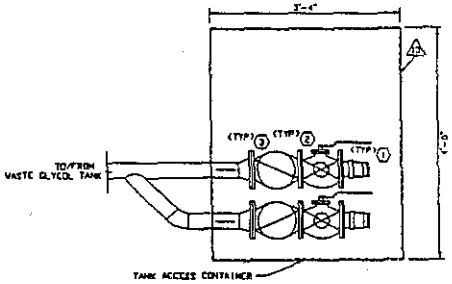

3 240 ACCESS CONTAINER PIPING DETAIL - PLAN
SCALE: NONE

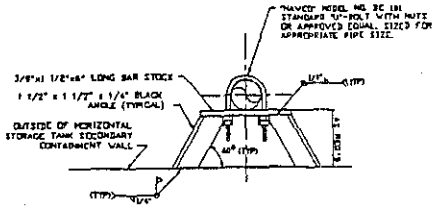

7 240 TANK PIPE SUPPORT DETAIL
SCALE: NONE

NO.	DESCRIPTION	BY	CHK	APPR	DATE
1	ADDENDUM NO. 1	VJE	GPH	-	1/12/98

REVISIONS

QUESTEC

TITLE

TANK FARM PIPING PLAN - AND DETAILS

SAFETY-KLEEN CORP.

SCALE	BY	CHKD	P.E. APPR	OP. APPR	DATE
1/4" = 1'-0"	Questec				7-1-97

SERVICE CENTER LOCATION: PEKIN, IL
SD-DWG-REV NO.: MF06-240-0
SHEET NO.: 59

VAREC AUTOMATIC TANK GAUGE
2500 SERIES

MARK	PART DESCRIPTION	REMARKS
1	GAUGE HEAD, IRON HOUSING AND SHEAVES, 304 S.S. TRIM	
2	GAUGE TAPE, 316 STAINLESS STEEL	
3	TOP GUIDE WIRE ANCHOR, STEEL HOUSING & SPRING ROD, CAD PLATE STEEL SPRING	SEE DETAIL 4
4	GAUGE FLOAT, 316 S.S. HOLLOW SHELL WELDED	
5	TAPE FASTENER, 316 STAINLESS STEEL	
6	BOTTOM GUIDE WIRE ANCHOR, STEEL	SEE DETAIL 2
7	SHEAVE ELBOW, IRON HOUSING, 316 S.S. TRIM, TEFLON BEARING	
8	GUIDE WIRE, 316 STAINLESS STEEL	

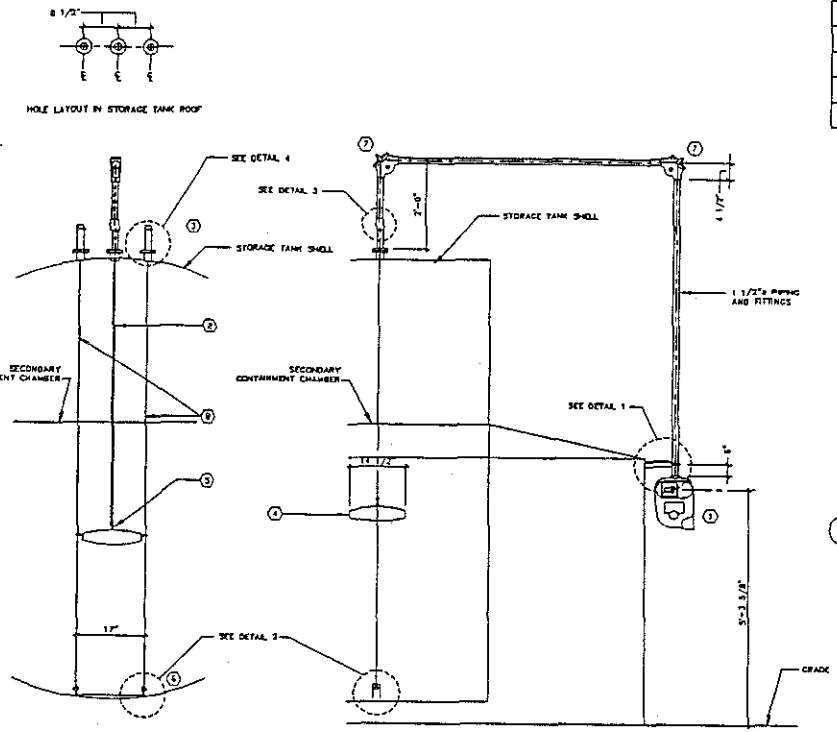

HORIZONTAL STORAGE TANK GAUGE INSTALLATION DETAILS
SCALE: NONE

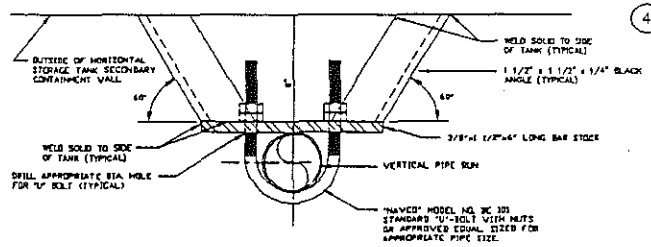

1 VERTICAL PIPE SUPPORT DETAIL
SCALE: NONE
#NOTE: SIMILAR DETAIL TO BE USED FOR SUPPORTING PIPE RUNS ACROSS TANK TOPS.
#NOTE: PAINT "U"-BOLT & NUTS, BARSTOCK, & ANGLES PER TANK PAINTING SPECS.

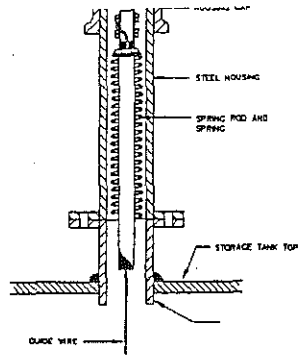

4 TOP GUIDE WIRE ANCHOR DETAIL
SCALE: NONE

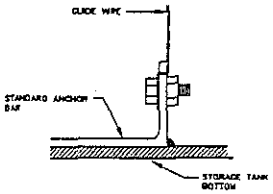

2 BOTTOM GUIDE WIRE ANCHOR DETAIL
SCALE: NONE

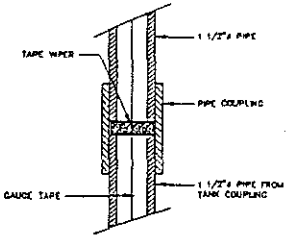

3 TAPE WIPER DETAIL
SCALE: NONE

GENERAL NOTES

THIS DRAWING CONTAINS INFORMATION PROPRIETARY TO SAFETY-KLEEN CORPORATION. ANY REPRODUCTION, DISCLOSURE OR USE OF THIS DRAWING IS EXPRESSLY PROHIBITED EXCEPT BY SAFETY-KLEEN OR AS SAFETY-KLEEN MAY AGREE IN WRITING.

1. SEE DWG. 240 FOR ACTUAL LEVEL GAUGE LOCATIONS.
2. SUPPORT PIPING 8'-0" O.C. MAXIMUM. PAINT ALL EXPOSED STEEL PER SPECIFICATIONS.

QUESTEC
CONSULTING ENGINEERS

NO.	DESCRIPTION	BY	CHK	APPR	DATE
1	ARDEWRUN NO. 1	VJS	GPH	-	07/29/92

REVISIONS

TITLE
VAREC GAUGE DETAILS FOR HORIZONTAL TANK

SAFETY-KLEEN CORP.
777 E.IE TRIBUNE ROAD ELGIN, ILLINOIS 60123 PHONE 708-697-6460

SCALE	BY	CHKD	P.E. APPR	OP. APPR	DATE
AS SHOWN	Chantrel				7-1-92

SERVICE CENTER LOCATION	SC-DWG-REV NO.	SHEET NO.
PEKIN, IL	WF06-242-0	60

8-1-92 5:00pm 2450.DWG

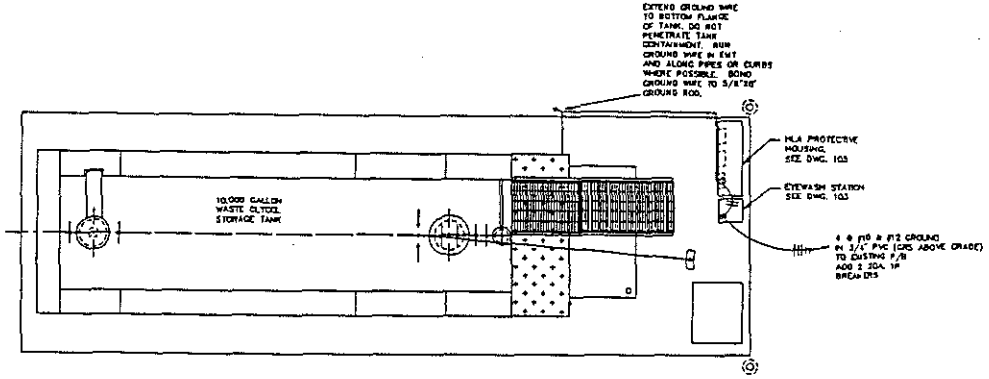

WIRING PLAN

SCALE: 1/4" = 1'-0"

GENERAL NOTES

THIS DRAWING CONTAINS INFORMATION PROPRIETARY TO SAFETY-KLEEN CORPORATION. ANY REPRODUCTION, DISCLOSURE OR USE OF THIS DRAWING IS EXPRESSLY PROHIBITED EXCEPT BY SAFETY-KLEEN OR AS SAFETY-KLEEN MAY AGREE IN WRITING.

1. INSTALL BONDING STRAP FROM GROUND ROD TO ELECTRICAL CONDUIT IN ACCORDANCE WITH NEC 250-46.
2. SEE DWG. 007 FOR SITE ELECTRICAL DETAILS.
3. POWER WIRING SHALL BE GASOLINE AND OIL RESISTANT THWN COPPER.
4. SEE DWG 240 FOR HLA SYSTEM SENSOR LOCATIONS.

QUESTEC

TITLE

TANK FARM ELECTRICAL PLANS

SAFETY-KLEEN CORP.

NO.	DESCRIPTION	BY	CHK	APPR	DATE
1	ADDENDUM NO. 1	LDL	GPH	-	1/7/92

REVISIONS

SCALE	BY	CHKD	P.E. APPR	OP. APPR	DATE
AS SHOWN	DunnTop				7-1-92

SERVICE CENTER LOCATION	SC-DWG-REV NO.	SHEET NO.
PEKIN, IL	MF06-460-0	61

9-1-92 5:00pm MF06460.DWG

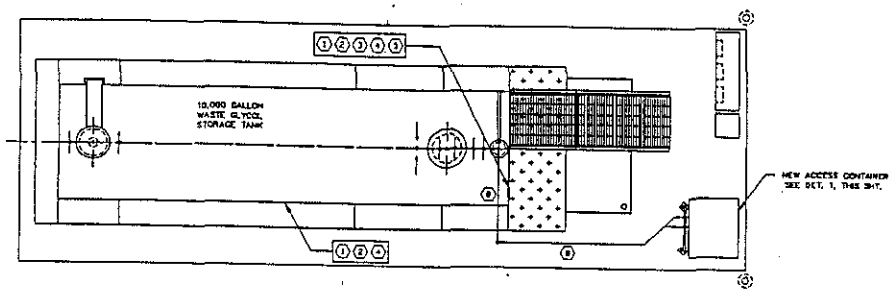

SIGN LOCATION PLAN

SCALE: 1/4" = 1'-0"

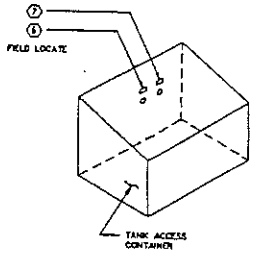

1/901 ACCESS CONTAINER DETAIL

NO SCALE

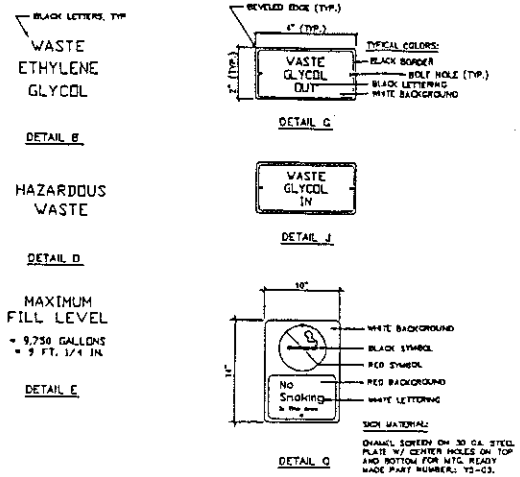

MARK NO.	DESCRIPTION	DETAIL	NUMBER REQUIRED	REMARKS/ MAT'L.
1	WASTE ETHYLENE GLYCOL	B	2/ WASTE GLYCOL TANK	NOTE 4, THIS DWG.
2	NFPA DESCRIPTION	---	2/ TANK	NOTE 1, THIS DWG.
3	NO SMOKING	Q	AS SHOWN	
4	HAZARDOUS WASTE	D	2/ WASTE SOLVENT TANK	NOTE 1, THIS DWG.
5	TANK CAPACITY	E	1/ TANK	NOTE 4, THIS DWG.
6	WASTE GLY. OUT	G	1/ ACCESS CONTAINER	NOTE 5, THIS DWG.
7	WASTE GLY. IN	J	1/ ACCESS CONTAINER	NOTE 5, THIS DWG.
8	WASTE GLYCOL		2	NOTE 6, THIS DWG.

GENERAL NOTES

THIS DRAWING CONTAINS INFORMATION PROPRIETARY TO SAFETY-KLEEN CORPORATION. ANY REPRODUCTION, DISCLOSURE OR USE OF THIS DRAWING IS EXPRESSLY PROHIBITED EXCEPT BY SAFETY-KLEEN OR AS SAFETY-KLEEN MAY AGREE IN WRITING.

1. - WASTE ETHYLENE GLYCOL

   SIGNAGE MUST COMPLY WITH NFPA 704M.

2. CONTRACTOR TO VERIFY ALL QUANTITIES REQUIRED.
3. LABEL PIPING PER SPECIFICATIONS.
4. TANK SIGNAGE:

   CONTRACTOR TO STENCIL TANKS AS SHOWN. LETTERS SHALL BE BLOCK TYPE AND HORIZONTAL AS SHOWN.
5. TANK ACCESS CONTAINER PIPING I.D. SIGN MATERIAL:

   RIGID 1/8" PLASTIC MATERIAL WHICH RESISTS STAINS AND IS EASY TO CLEAN. PROVIDE CUSTOM ENGRAVED IDENTIFICATION. FASTEN WITH GALVANIZED BOLTS AND NUTS AS SHOWN.
6. PIPE MARKERS SHALL COMPLY WITH ANSI A13.1. MARKERS SHALL BE A MINIMUM OF ± 1/8" x 7", WITH 1" TALL LETTERS. USE STANDARD PRODUCTS OF THE KWIK-KOL OR SETON NAME PLATE CO.
7. INSTALL ALL SIGNAGE AFTER FINAL PAINTING OF TANK AND PIPING.

QUESTEC

TITLE

TANK FARM
SIGN LOCATION
AND DETAILS

SAFETY-KLEEN CORP.

NO.	DESCRIPTION	BY	CHK	APPR	DATE
1	ABBOTTOM NO. 1	VJG	CPR	-	9/23/92

REVISIONS

SCALE	BY	CHKD	P.E. APPR	OP. APPR	DATE
1/4" = 1'-0"	Quest Inc				7-28-92

SERVICE CENTER LOCATION	SC-DWG-REV NO.	SHEET NO.
PEKIN, IL	MF08-915-0	62

8-1-92 5:00pm 9150.DWG

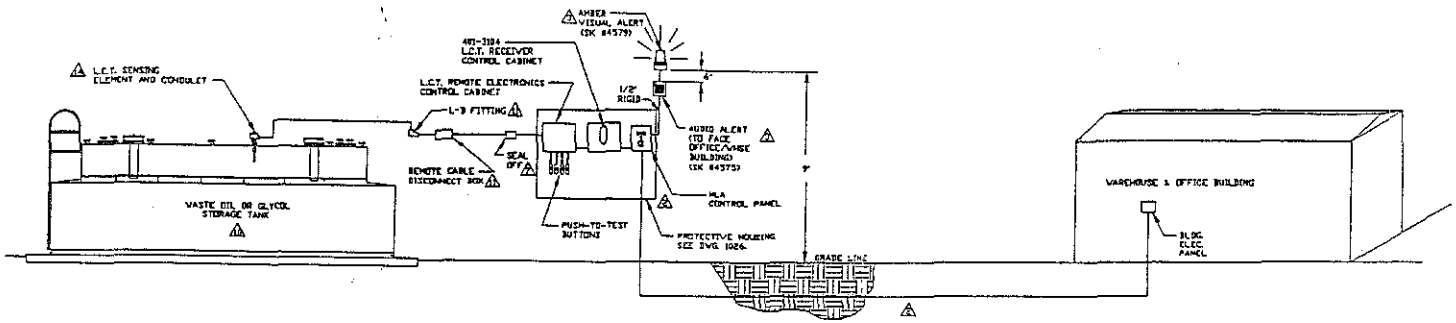

HIGH LEVEL ALARM SYSTEM DIAGRAM

SCALE: NONE

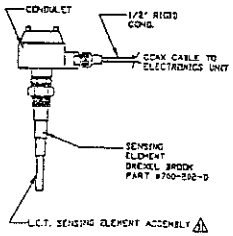

L.C.T. SENSING ELEMENT AND CONDULET DETAIL

SCALE: NONE

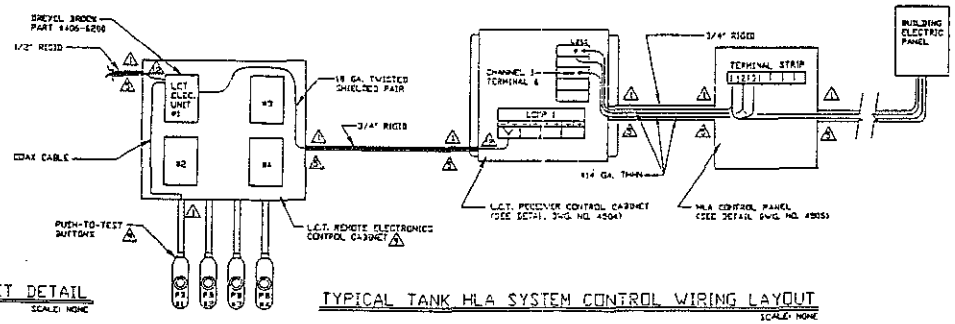

TYPICAL TANK HLA SYSTEM CONTROL WIRING LAYOUT

SCALE: NONE

THIS DRAWING REPRESENTS TYPICAL SAFETY-KLEEN CONSTRUCTION PRACTICES

GENERAL NOTES

THIS DRAWING CONTAINS INFORMATION PROPRIETARY TO SAFETY-KLEEN CORPORATION. ANY REPRODUCTION, DISCLOSURE OR USE OF THIS DRAWING IS EXPRESSLY PROHIBITED EXCEPT BY SAFETY-KLEEN OR AS SAFETY-KLEEN MAY AGREE IN WRITING.

1. USE MEYER'S HUBS AT ALL CONDUIT ENTRIES INTO ELECTRICAL BOXES.
2. SEE SITE UTILITY PLAN FOR WIRE & CONDUIT SIZE AND SPECIFIC EQUIPMENT MOUNTING.
3. SUPPLIED BY S-K.
4. L.C.T. = LEVEL CONTROL TRANSMITTER
5. CONDUIT PENETRATION TO BE ON SIDE OF ENCLOSURE APPROX. WHERE SHOWN.
6. ELECTRIC CONTRACTOR SHALL INSTALL CONDUCTORS IN CONTROL PANELS IN A NEAT & ORDERLY FASHION. THIS INCLUDES USING TIE WRAPS & TAGGING CONDUCTORS.
7. INSTALL SEALING FITTING 12" FROM L.C.T. REMOTE ELECTRONICS CONTROL CABINET.
8. CONTRACTOR IS NOT TO USE WIRE PULLING SOAP FROM L.C.T. REMOTE ELECTRONICS CONTROL CABINET TO L.C.T. SENSING ELEMENT AND CONDULET.
9. SEE DETAIL DWG. 4503
10. FOR SOLVENT TANK SEE "SOLVENT TANK HLA SYSTEM DIAGRAM", DWG. NO. 4502
11. SEE DWG. 4502 FOR INSTALLATION PROCEDURE.
12. HLA LOW VOLTAGE OPERATING REQUIREMENTS:
    - A. POWER REQUIREMENT 13 TO 28 VDC.
    - B. OUTPUT 4 - 13 mA (ALARM STATE) 15 - 25 mA (NORMAL STATE)
    - C. OPERATING TEMP. -40°F TO +140°F
    - D. SHIELD-TO-GROUND LOADING 25 ohm MIN. RESISTANCE
    - E. RFI EFFECT: LESS THAN 2 pF SHIFT IN OPERATING POINT FOR UNIT IN EXPLOSION-PROOF HOUSING FROM 5 V FIELD @ 27, 150, OR 450 MHZ AT A DISTANCE OF 3 FT. FROM EXPOSED CABLE OF SIGNAL WIRE.
    - F. FAIL-SAFE SWITCHABLE FROM EITHER LOW-LEVEL FAIL-SAFE (LLFS) OR HIGH-LEVEL FAIL-SAFE (HLFS).
13. IF INDIVIDUAL SERVICE CENTER CONDITIONS ARE NOT COVERED BY DETAILS SHOWN HERE CONTACT ENGINEER OR S-K TECHNICAL SERVICES.
14. WRAP ALL RIGID CONDUIT THREADS WITH TEFLON TAPE.
15. ALL ELECTRICAL WITHIN 10 FT. OF TANK TO BE CLASS I, DIV. 2, PER LOCAL CODE. SEE SITE UTILITY PLAN FOR ADDITIONAL SPECIFICATIONS.
16. DO NOT INSTALL L.C.T. SENSING ELEMENT IN TANK COUPLING IN CENTER OF TANK.

NO.	DESCRIPTION	BY	CHK	APPR	DATE
	REVISIONS				

TITLE: ANTIFREEZE/OIL TANK HLA SYSTEM DIAGRAM

SAFETY-KLEEN CORP.

SCALE	BY	CHKD	P.E. APPR	OP. APPR	DATE
AS SHOWN		-	-	-	12-1-90

SERVICE CENTER LOCATION: PEKIN, IL

SO-DWG-REV NO.: 513601-4501-00

SHEET NO.:

4-7-93

SECTION 09900R

PAINTING

PART 1 - GENERAL

1.1 SUMMARY

A. Paint and finish exposed surfaces as identified in Drawings, as specified herein, and as needed for a complete and proper installation.

B. Related Work:
1. Documents affecting work of this Section include, but are not necessarily limited to, General Conditions, Supplementary Conditions, and Sections in Division 1 of these Specifications.
2. Priming or priming and finishing of certain surfaces may be specified to be factory-performed or installer-performed under other Sections.
3. Other:
   a. 04200 - Unit Masonry
   b. 05201 - Open Web Steel Joists
   c. 05300 - Metal Decking
   d. 05500 - Structural Steel/Miscellaneous Metal
   e. 05510 - Metal Stairs
   f. 06200 - Finish Carpentry
   g. 07900 - Sealants and Caulking
   h. 08110 - Hollow Metal Doors and Frames
   i. 08200 - Wood Doors
   j. 09260 - Gypsum Wallboard
   k. 15488 - Gas Piping
   l. 15550 - Process Piping

C. Work Included:
1. Exterior
   a. Doors
   b. Metal Trim not pre-finished
   c. Pipes
   d. Tanks
   e. Other items as noted on Drawings and specified in these Specifications.
2. Interior
   a. All interior surfaces in exposed areas not previously pre-finished.
   b. Doors.
   c. Metal trim not pre-finished.
   d. Steel bumper posts.
   e. Metal stairs, posts and rails
   f. CMU block walls
3. Protect adjacent surfaces not scheduled to receive paint.
4. Prepare surfaces to receive paint.
5. Execute miscellaneous work not specifically mentioned, but required to complete work.

D. Work Not Included:

1. Unless otherwise indicated, painting is not required on surfaces in concealed areas and inaccessible areas such as furred spaces, foundation spaces, utility tunnels, pipe spaces, and duct shafts.
2. Metal surfaces of anodized aluminum, stainless steel, chromium plate, copper, bronze, and similar finished materials will not require painting under this Section except as may be so specified.
3. Do not paint moving parts of operating units; mechanical or electrical parts such as valve operators; linkages; sensing devises; and motor shafts, unless otherwise indicated.
4. Do not paint over required labels or equipment identification, performance rating, name, or nomenclature plates.
5. Do not paint concrete unless otherwise specified.

1.2 MOCK-UP

A. Before proceeding with interior wall paint applications, finish one complete surface of each color scheme required clearly indicating selected colors, finish texture, materials and workmanship.

B. If approved, sample area will serve as a minimum standard for work throughout the building.

1.3 SUBMITTALS

A. Product Data

1. Manufacturers specification data sheets to show compliance with these specifications.

B. Samples

1. Prepare 12" x 12" samples of all finishes when requested by Owner. When possible, apply finishes on identical type materials to which they will be applied on job.
2. Identify each sample as to finish, formula, color name and number, and sheen name and gloss units.

C. Colors to be selected by Owner prior to commencement of work.

1.4 MAINTENANCE MATERIALS

A. Leave on premises, where directed by Owner, not less than one gallon of each color used.

B. Containers to be tightly sealed and clearly labeled for identification.

1.5 DELIVERY, STORAGE AND HANDLING

A. Deliver paint materials in sealed original labeled containers, bearing manufacturer's name, type of paint, brand name, color designation and instructions for mixing and/or reducing.

B. Provide adequate storage facilities. Store paint materials at minimum ambient temperature of 45°F in well ventilated area.

C. Take precautionary measures to prevent fire hazards and spontaneous combustion.

1.6 ENVIRONMENTAL CONDITIONS

A. Exterior: Do not paint if air or surface temperature is below 50°F, or immediately following rain or until frost, dew or condensation has evaporated. Interior: Maintain a minimum interior temperature of 65° during application and drying of paint, and until building occupancy occurs. Provide adequate ventilation to control excessive humidity.

B. Do not apply finishes in areas where dust is being generated.

C. Provide minimum 25 foot-candles of lighting on surfaces to be finished.

1.7 PROTECTION

A. Adequately protect other surfaces from paint and damage. Repair damage as a result of inadequate protection.

B. Furnish sufficient drop cloths, shields and protective equipment to prevent spray or droppings from fouling surfaces not being painted and, in particular, surfaces within storage and preparation area.

C. Place cotton waste cloths and materials which may constitute a fire hazard in closed metal containers and remove daily from site.

D. Remove electrical plates, surface hardware, fittings and fasteners prior to painting operations. These items are to be carefully stored, cleaned and replaced on completion of work in each area. Do not use solvent to clean hardware that may remove permanent lacquer finish.

1.8 SAFETY

A. OSHA and Owner safety regulations shall be strictly adhered to.

B. All safety precautions noted on labels and MSDS shall be followed.

1.9 QUALITY ASSURANCE

A. Use adequate numbers of skilled workmen who are thoroughly trained and experienced in the necessary crafts and who are completely familiar with the specified requirements and the methods needed for proper performance of the work of this Section.

B. Paint Coordination:
1. Provide finish coats which are compatible with the prime coats actually used.
2. Review other Sections of these Specifications as required, verifying the prime coats to be used and assuring compatibility of the total coating system for the various substrata.
3. Upon request, furnish information on the characteristics of the specific finish materials to assure that compatible prime coats are used.
4. Provide barrier coats over non-compatible primers, or remove the primer and reprime as required.
5. Notify the Engineer in writing of anticipated problems in using the specified coating systems over prime-coatings supplied under other Sections.

C. Submit manufacturer's written certification that products used on this project meet or exceed any local or state non-combustible finish requirements.

PART 2 - PRODUCTS

2.1 ACCEPTABLE MANUFACTURERS

A. Paint, enamel, and fillers; type and brand listed herein as a standard of quality, are manufactured by Sherwin Williams. Other acceptable manufacturers are:
   1. Benjamin Moore
   2. Pratt and Lambert
   3. Gliddens

B. Use products of a single manufacturer for painting each type of surface.

C. Paint accessory materials: Secondary products not specified by name, but required to achieve the finishes specified, shall be "best grade" or "first line" products of a reputable manufacturer.

D. Paints: Ready-mixed. Pigments fully ground, maintaining a soft paste consistency, capable of readily and uniformly dispersing to a complete homogenous texture.

E. Paints to have good flowing and brushing properties and be capable of drying or curing free of streaks, sags, runs or other defects.

F. All colors to be selected by Owner.

2.2 MIXING AND TINTING

A. Deliver paints and enamels ready-mixed to job site.

B. Job tinting will not be allowed.

2.3 APPLICATION EQUIPMENT

A. Use only such equipment as is recommended for application by the manufacturer of that paint.

B. Prior to use of application equipment, verify that the proposed equipment is actually compatible with the material to be applied, and that integrity of the finish will not be jeopardized by use of the proposed equipment.

2.4 OTHER MATERIALS

A. Provide other materials, not specifically described but required for a complete and proper installation, as selected by the Contractor subject to the approval of the Engineer.

PART 3 - EXECUTION

3.1 SURFACE CONDITIONS

A. Examine surfaces scheduled to receive paint and finishes for conditions that will adversely affect execution, permanence or quality of work and which cannot be put into acceptable condition through preparatory work specified herein.

B. Report in writing to Engineer, any condition that may affect the proper application of work specified under this section.

C. Do not proceed with surface preparation or coating application until conditions are suitable.

D. Start of the work constitutes acceptance of construction conditions.

3.2 SURFACE PREPARATION

A. Wood
1. Clean soiled surfaces with alcohol wash.
2. Sand to smooth even surface, then dust off with tack cloth.
3. Apply knot sealer to all knots, pitch and resinous sapwood before priming coat is applied.
4. After prime coat has dried, fill nail holes, cracks, open joints and other joints with putty consistent with type of finish being applied. Color to match finish color.

B. Gypsum Wallboard
1. Fill narrow, shallow cracks and small holes with spackling compound.
2. Rake deep, wide cracks and deep holes
   a. Dampen with water
   b. Fill with thin layers of patching plaster (for plaster work) or drywall joint cement (for gypsum wallboard).
3. Texture finish to match that adjacent to area being patched.
4. Allow to dry.
5. Sand smooth (unless texture matches adjacent surface without sanding). Do not raise nap of paper on gypsum wallboard.
6. Wipe down all surfaces with tack cloth prior to prime painting.

C. Hollow Metal and Ferrous Metal Items
1. Clean surface contamination and oils from surfaces with a solvent wash.
2. Touch sand manufacturer's shop prime coat, as required to remove runs of other defects and to assure good adhesion of finish paint.
3. Wipe clean with tack cloth.
4. Touch up shop prime coat, feathering out edges to make touch up patches inconspicuous.

D. Tanks and Pipes
1. Before any surface is coated, it shall be thoroughly cleaned of all dust, dirt, grease, oil, solvents, loose rust, mill scale, old paint or any other substance which will inhibit proper application of paint.
2. Tanks are delivered to the site shop primed.
3. Sand tank's shop prime coat as required to remove defects and to assure good adhesion of finish paint.

E. CMU Interior Block Walls
1. Prepare surfaces for coating.
2. Surfaces must be free of laitance, concrete, dust, dirt, form release agents, moisture curing membranes, loose cement and hardeners.
3. Concrete and mortar must be cured at least 30 days at 75°F or according to manufacturer's recommendations.
4. Patch surface imperfections with cement patching compound.

3.3 PROTECTION

A. Adequately protect other surfaces from paint and damage. Repair damage as a result of inadequate or unsuitable protection.

B. Furnish sufficient drop cloths, shields and protective equipment to prevent spray or droppings from fouling surfaces not being painted and in particular, surfaces within storage and preparation area.

C. Place cotton waste, cloths and material which may constitute a fire hazard in closed metal containers and remove daily from site.

D. Prior to painting operations, remove electrical plates, surface hardware, fittings and fastenings. These items are to be carefully stored, cleaned and replaced upon completion of work in each area. Do not use solvent to clean hardware that may remove permanent lacquer finish.

3.4 APPLICATION

A. General Requirements

1. Do not apply initial coating until moisture content of surface is within limitations recommended by paint manufacturer.
   a. Test with moisture meter.
2. Apply paint enamel and varnish with suitable brushes or rollers.
   a. Rate of application shall not exceed that as recommended by paint manufacturer for the surface involved.
   b. Keep brushes and rollers, clean, dry, free from contaminants and suitable for this finish required.
3. Comply with recommendation of product manufacturer for drying time between succeeding coats.
4. Vary slightly the color of successive coats.
5. Sand and dust between each coat to remove defects visible from a distance of five feet.
6. Finish coats shall be smooth, free of brush marks, streaks, laps, or pile up of paints, and skipped or missed areas.
7. Inspection
   a. Do not apply additional coats until completed coat has been inspected by the Owner/Engineer.
   b. Only inspected coats of paint will be considered in determining number of coats applied.
8. Leave all parts of moldings and ornaments clean and true to details with no undue amount of paint in corners and depressions.
9. Make edges of paint adjoining other materials or colors clean and sharp with no overlapping.
10. Apply primer on all work before glazing.
11. Change colors at door stops where colors differ between adjoining spaces or rooms and where door frames match wall colors.
12. Refinish whole wall where portion of finish has been damaged by demolition, or is not acceptable. Finish to the nearest intersection of in the case of an assembly, such as doors and frames, refinish entire assembly, or as noted on finish schedule.
13. Back prime all new interior trim.
14. Runs on face are not permitted.
15. Paint or varnish, as Scheduled, tops, edges, and bottoms of doors.

B. Brush Applications:
1. Brush out and work the brush coats onto the surface in an even film.
2. Cloudiness, spotting, holidays, laps, brush marks, runs, sags, ropiness, and other surface imperfections will not be acceptable.

C. Spray Application:
1. Where spray application is used, apply each coat to provide the hiding equivalent of brush coats.

2. Do not double back with spray equipment to build up film thickness of two coats in one pass.

D. Miscellaneous Surfaces and Procedures:
1. Wet areas:
a. In toilet rooms, locker rooms, mud rooms, and contiguous areas, add an approved fungicide to paints.

E. Tank and Pipe Painting
1. All coatings shall be applied in a workmanlike manner to achieve dry mil film build, leaving a smooth, uniform appearing coat.
2. Do not begin painting until tank and piping construction is complete.
3. Apply three coats of paint to non-primed piping and tank areas, and two coats to shop primed tanks.
4. If sandblasting of tank is required, apply primer coat immediately after completion of blasting and cleaning of dust and debris.

F. CMU - Exterior Block Walls
1. Apply only as much sealer/conditioner as surface will absorb.
2. Do not build up visible glaze on the surface.
3. Do not apply over damp surfaces, as the moisture prevents proper penetration.

G. CMU - Interior Block Walls
1. Apply filler/sealer coating by spray, followed by roller, being careful to force material into pores, in order to produce a relatively smooth surface.

3.5 EXTERIOR PAINT SCHEDULE

A. Wood Painted
1. Prime Coat: A-100 Alkyd Exterior Wood Primer (Y24W20).
2. Finish: Two coats Industrial Enamel (B54 Series).

B. Wood Stained
1. Two coats Exterior Alkyd Semi-Transparent Wood Preservative Stain (A14 Series).

C. Hollow Metal and Ferrous Metal Items
1. Prime Coat: Kem Kromik Metal Primer (B50N2).
2. Finish: Two coats Industrial Enamel (B54 Series).

D. Aluminum
1. Prime Coat: Zinc Chromate Primer (B50Y1).
2. Finish: SWP Exterior Gloss Paint (A2 Series)

E. Galvanized Metal
1. Prime Coat: Galvite Paint (B50W3).
2. Finish: Two coats, SWP Exterior Gloss Paint (A2 Series).

F. Tank and Piping
1. Primer Coat: Sherwin-Williams Zinc Clad III, 3-4 mils dry, 6-8 mils wet. Allow 24 hours to dry.
2. Intermediate Coat: Apply one coat Sherwin-Williams DTM Acrylic Gloss, B66 Series, Color no. MC-64 Silver (light grey), 3-4 mils dry, 8-10 mils wet. Allow to dry overnight.
3. Finish Coat: Apply one coat Sherwin-Williams DTM Acrylic Gloss, B66W101 series, 3-4 mils dry, 8-10 mils wet, in selected color (Tanks - white; Pipes - grey) per Owner.

G. CMU - Exterior Block Walls
1. Apply Masonry Conditioner (A5V2) thinned with up to 2 quarts per gallon with mineral spirits (as recommended by manufacturer according to block porosity).

3.6 INTERIOR PAINT SCHEDULE

A. See Room Finish Schedule or Drawings.

B. Wood Painted
1. Prime Coat: Wall and Wood Primer (B49W2).
2. Finish: Two coats, Industrial Enamel (B54 Series).

C. Wood Stained
1. Prime Coat: One coat Oil Stain (A48 Series).
2. Finish: Two coats Oil Base Varish Stain (A66F90). Apply first coat thinned with one pint mineral spirits per gallon.

D. Hollow Metal and Ferrous Metal
1. Prime Coat: Kem Kromik Primer (B50N2).
2. Finish: Two coats Industrial Enamel (B54 Series).

E. Gypsum Wallboard
1. Prime Coat: ProMar 200 Latex Wall Primer (B28W200).
2. Finish: Two coats ProMar 200 Latex Flat Wall Paint (B30W200), ProMar 200 Interior Latex Semi-Gloss Enamel (B31W200), or Tile Clad KK Epoxy (B62 Series) as shown on Drawings.

F. CMU - Interior Block Walls, Exposed
1. Prime Coat: ProMar Block Filler (B25W25)
2. Finish: Two coats Industrial Enamel (B54 Series)

3.7 PAINTING OF MISCELLANEOUS ITEMS

A. Provide painting of other items as indicated on the Drawings.

3.8 CLEANING

A. Touch up and restore finish where damaged.

B. Remove spilled, splashed, or splattered paint from all surfaces, as work proceeds, and upon completion.

C. Do not mar surface finish of item being cleaned.

D. During progress of work keep premises free from any unnecessary accumulation of tools, equipment, surplus materials, and debris.

E. Upon completion of work, leave premises in as good or better condition than it was when work started.

END OF SECTION

SECTION 15550

PROCESS PIPING

PART 1 - GENERAL

1.1 SUMMARY

A. Provide process pipe systems for the tank farms and return/fill areas as specified herein and as shown on the Drawings.

B. Related Work:
1. Documents affecting work of this Section include,but are not necessarily limited to, General Conditions, Supplementary Conditions, and Sections in Division 1 of these Specifications.
2. Other
   a. 15060 - Piping Materials & Methods
   b. 15100 - Valves
   c. 15140 - Hangers & Supports
   d. 15190 - Piping Identification System
   e. 15260 - Mechanical Pipe Insulation
   f. 15996 - Horizontal Tank and Pipe Testing

1.2 SUBMITTALS

A. Comply with pertinent provisions of Section 01340.

B. Product Data:
1. Manufacturer's specifications and other data needed to prove compliance with the specified requirements;
2. Letter of certification that materials and installation comply with these Specifications.

C. Welding Certification
1. Provide certification of approval, welding procedures, operators qualifications, etc. as required by ANSI B31.3.
2. Contractor shall prepare, maintain and submit all documentation including certificates of approval, welding procedures, welding operators qualifications, test reports, etc., as required.
3. In addition to the copies of all documentation requested by and submitted to all parties having jurisdiction, Contractor shall furnish to the Engineer three (3) copies for his record file.

1.3 QUALITY ASSURANCE

A. Use adequate numbers of skilled workmen who are thoroughly trained and experienced in the necessary crafts and who are completely familiar with the specified requirements and the methods needed for proper performance of the Work of this Section.

B. Design, fabricate and test equipment and materials in accordance with the manufacturer's recommended procedures and the applicable Sections of ANSI B31.3, "Chemical Plant and Petroleum Refinery Piping".

1.4 DELIVERY, STORAGE AND HANDLING

A. Comply with pertinent provisions of Section 01620.

PART 2 - PRODUCTS

2.1 FABRICATED STEEL PIPE

A. Pipe:
1. Type: Seamless.
2. Reference: ASME/ANSI B31.3, and NFPA 30.
3. Material: ASTM A53. Grade B minimum.
4. Diameter: Pipe diameter shown on the Drawings shall be interpreted to mean the nominal inside diameter of the pipe.

B. Joints:
1. Type: Flanged and welded.
2. Flanged and welded joints shall be per Drawings and applicable portions of ANSI B31.3 and NFPA 30.

C. Fittings:
1. Type: Welded or flanged, as shown on the Drawings and per applicable portions of ANSI B31.3 and NFPA 30.
2. Material: Comparable to pipe materials. ASTM A53 Grade B, minimum.

D. Identification:
1. Stamp, mark, or identify all pipeline materials with the following:
   a. Name of manufacturer.
   b. Date of manufacture.
   c. Operating design pressure at operating design temperature.
   d. Type of service.
   e. Manufacturer's part number.

E. Acceptable manufacturers: Pipe and materials shall be as specified in Section 15060 of these Specifications.

PART 3 - EXECUTION

3.1 INSTALLATION

A. All piping shall be installed per Section 15060 of these Specifications.

B. Welding
1. Contractor shall comply with the requirements of the applicable sections of ANSI B31.3, AWS and local jurisdiction.

3.2 CLEANING

A. Thoroughly clean and flush all piping prior to placing in service in a manner acceptable to the Engineer.

3.3 TESTING OF PIPING

A. Test all piping per Section 15994 - Tank and Pipe Testing, of these Specifications.

3.4 PAINTING

A. Paint all non-insulated pipe per Section 09900 of these Specifications.

END OF SECTION

SECTION 15996

HORIZONTAL TANK AND PIPE TESTING

PART 1 - GENERAL

1.1 SUMMARY

A. Furnish all labor, materials and equipment required for leak testing of tanks and piping in the Tank Farm Area.

B. Related Work
   1. Documents affecting Work of this Section include, but are not necessarily limited to, General Conditions, Supplementary Conditions, and Sections in Division 1 of these Specifications.

1.2 QUALITY ASSURANCE

A. Tanks shall be tested according to UL 142.

B. Piping shall be tested according to ANSI B31.3.

C. All horizontal tanks are to be air pressure tested to 5.0 psi plus or minus 5%, or plus or minus 0.25 psi. Each tank must hold this pressure within that 5% tolerance for a period of 30 minutes. For example, the pressure may drop to 4.75 psi in 30 minutes for a tank initially pressurized to 5.0 psi. Additional loss will not be accepted.

D. All piping is to be air pressure tested to 85.0 psi plus or minus 5%, or plus or minus 4.0 psi. Each piping run must hold this pressure within that 5% tolerance for a period of 45 minutes. For example, the pressure may drop to 81.0 psi in 45 minutes for a piping run initially pressurized to 85.0 psi. Additional loss will not be accepted.

1.3 TESTING EQUIPMENT

A. The Testing Company will be required to have at least one pressure gauge measuring 0-10 psi in maximum 1 psi increments, and one pressure gauge measuring 0-100 or 0-150 psi in maximum 5 psi increments. At least two quick disconnects and two shut-off valves at the disconnects will also be required, for the disconnects to permit the application of pressurized air to the system and for the valves to be able to close off the pressurized tank or piping system. An air compressor with a capacity of at least 100 psi will be required.

1.4 PROCEDURES

A. All tanks and pipes for this Work must be leak tested under the direct observation of a Registered Professional Engineer. The Owner will select and pay for the services of the Engineer. The Contractor is to successfully perform all tank and pipe tests prior to notifying the Professional Engineer that the system is ready for test observations.

B. Tank Test Procedure:

1. Disconnect the top-of-tank fill line if present, seal and plug the hole in the tank.
2. Remove the tank vents and tank gauging, if installed, and seal and plug the holes.
3. Close all tank valves securely.
4. In a previously unused tank connection, install the pressurizing assembly consisting of the 0-10 psi pressure gauge, a shut-off valve and a quick disconnect.
5. Seal and plug any remaining holes in the tank, including the manhole cover which is to be gasketed and fully bolted in ALL holes.
6. Record the Manufacturer's Tank No. and any labeling plates (written word for word) installed on the tank. Also make note if they are missing.
7. Pressurize the tank to 5.0 psi. Record the time. Soap water test all plugged openings, joints and around the manhole covers and their bolts. The tank can lose no more that 0.25 psi in 30 minutes. Check for leaks with the soap water solution and repair as required. Repeat the procedure until the tank will hold the test pressure for the required 30 minute test period.
8. LEAVE THE TANK IN THIS CONFIGURATION UNTIL THE PROFESSIONAL ENGINEER RESPONSIBLE FOR THE TESTING HAS OBSERVED THE TEST REPEATED IN HIS PRESENCE AND HAS ACCEPTED THE TANK FOR USE.
9. Re-install the tank vents and tank fluid level gauging equipment as per the Safety-Kleen drawings and specifications.
10. Remove the tank pressurizing assembly and seal and plug the port.
11. Repeat Steps 1 through 10 for each tank being tested.
12. When the piping tests have been completed, re-connect the tank fill lines, if applicable.
13. This completes the tank testing.

C. Piping Test Procedure:

1. Each tank/piping system is to be tested separately. Follow procedures below for each system.
2. Disconnect the top-of-tank fill line, if present. Seal and plug the hole in the end of line.
3. If applicable, remove the Return Line pump and install by-pass piping of equivalent size. Tighten securely.
4. Close valves at the tank access containers securely. Make sure all piping ends are capped and sealed.
5. Test each pipe run separately.
6. In the end of the piping segment being tested, install the pressurizing assembly consisting of the 0-100 psi or 0-150 psi pressure gauge, a shut-off valve and a quick disconnect.
7. Pressurize the line to 85.0 psi. Record the time. Soap water test all plugged openings, joints and other connections. The line can lose no more tn 4.0 psi in 45 minutes. Check for leaks with the soap water solution and repair the line as required. Repeat the procedure until the line will hold the test pressure for the required 45 minute test period.
8. LEAVE THE LINE IN THIS CONFIGURATION UNTIL THE PROFESSIONAL ENGINEER RESPONSIBLE FOR THE TESTING HAS OBSERVED THE TEST REPEATED IN HIS PRESENCE AND HAS ACCEPTED THE LINE FOR USE.
9. Remove the tank pressurizing assembly and reinstall the proper fittings as per the Safety-Kleen drawings and specifications.
10. Repeat Steps 1 through 8 for each piping segment until all segments have been tested.
11. When the tank testing has been completed, re-connect the tank fill lines, if applicable.
12. This completes the piping test.

1.5 ACCEPTANCE

A. The systems will only be accepted for use after both tank and piping tests have been completed and accepted by the Professional Engineer responsible for the testing.

1.6 RETESTING OF TANKS & PIPING

A. If the tanks and pipe are not configured per the plans and specifications when the Professional Engineer arrives on site for the test, or if any part of the tank and pipe system fails the pressure test while being performed in the presence of the Professional Engineer and the leak cannot be repaired in a timely enough manner, such that the Professional Engineer is required to make an additional trip to the site to complete the test; or if the trip needs to be extended to witness the test again, then the Contractor will be responsible for reimbursing the Owner for additional time and expenses incurred by the Professional Engineer, at the Engineer's published rates.

1.7 CLEANUP

A. It is the responsibility of the Testing Contractor to clean up the site of all testing materials and fluids which may have been spilled during the test.

END OF SECTION

NATIONAL FLOOD INSURANCE PROGRAM

FLOODWAY

FLOOD BOUNDARY AND FLOODWAY MAP

COUNTY OF
TAZEWELL,
ILLINOIS
(UNINCORPORATED AREAS)

EFFECTIVE DATE:
AUGUST 1, 1980

U.S. DEPARTMENT OF HOUSING AND URBAN DEVELOPMENT
FEDERAL INSURANCE ADMINISTRATION

KEY TO MAP

500-Year Flood Boundary

100-Year Flood Boundary

Zone Designations* With Date of Identification e.g., 12/2/74

100-Year Flood Boundary

500-Year Flood Boundary

ZONE B
ZONE A7
ZONE B

Base Flood Elevation Line With Elevation In Feet** — 613 —

Base Flood Elevation In Feet Where Uniform Within Zone** (EL 987)

Elevation Reference Mark RM7 ×

River Mile • M1.5

**Referenced to the National Geodetic Vertical Datum of 1929

*EXPLANATION OF ZONE DESIGNATIONS

ZONE	EXPLANATION
A	Areas of 100-year flood; base flood elevations and flood hazard factors not determined.
AO	Areas of 100-year shallow flooding where depths are between one (1) and three (3) feet; average depths of inundation are shown, but no flood hazard factors are determined.
AH	Areas of 100-year shallow flooding where depths are between one (1) and three (3) feet; base flood elevations are shown, but no flood hazard factors are determined.
A1-A30	Areas of 100-year flood; base flood elevations and flood hazard factors determined.
A99	Areas of 100-year flood to be protected by flood protection system under construction; base flood elevations and flood hazard factors not determined.
B	Areas between limits of the 100-year flood and 500-year flood; or certain areas subject to 100-year flooding with average depths less than one (1) foot or where the contributing drainage area is less than one square mile; or areas protected by levees from the base flood. (Medium shading)
C	Areas of minimal flooding. (No shading)
D	Areas of undetermined, but possible, flood hazards.
V	Areas of 100-year coastal flood with velocity (wave action); base flood elevations and flood hazard factors not determined.
V1-V30	Areas of 100-year coastal flood with velocity (wave action); base flood elevations and flood hazard factors determined.

NOTES TO USER

Certain areas not in the special flood hazard areas (zones A and V) may be protected by flood control structures.

This map is for flood insurance purposes only; it does not necessarily show all areas subject to flooding in the community or all planimetric features outside special flood hazard areas.

For adjoining map panels, see separately printed Index To Map Panels.

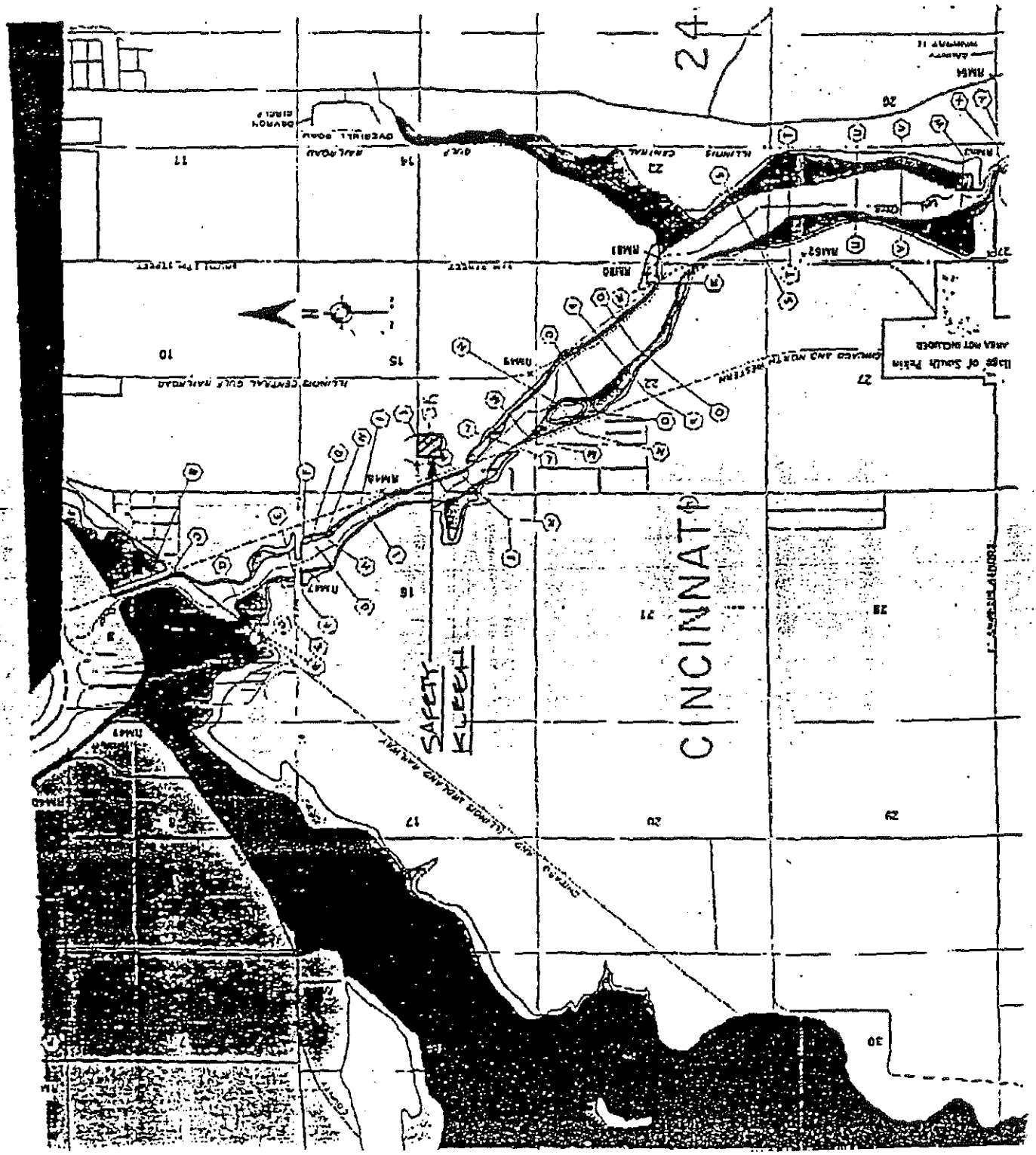
CINCINNATI
SAFETY KLEEN
24
TAZEWELL COUNTY
04/07/93 14:06
002

APPENDIX B

Design Review Documents

APPENDIX B

Design Review Documents

TABLE OF CONTENTS

Title	Page No.
Tank Farm Data/Gravity Loads	B-1
Wind Analysis	B-2
Earthquake Analysis	B-4
Foundation Slab Analysis	B-6
Secondary Containment Calculations	B-9
Tank Venting Evaluation	B-10
NFPA 30 Tank System Evaluation	B-12
NFPA 30 Pipe System Evaluation	B-16

QUESTEC CORPORATION

CONSULTING ENGINEERS
Mechanical • Electrical • Civil • Environmental

4812 SANTANA CIRCLE, COLUMBIA, MO. 65203

Client SAFETY KLEEN CORP. Pg. B-1

Project No. 9341.2 Date 4-12-93

Project Title PEKIN, LA.

Subject USED ANTIFREEZE TANK DESIGN ASSESSMENT

Designer TYJ Cx By SD Prelim ____ Final x

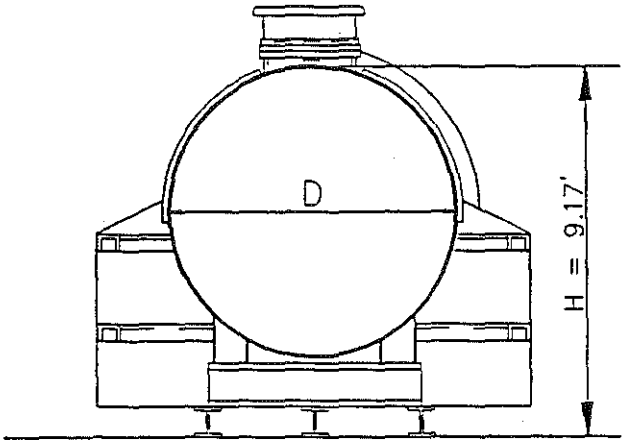

HORIZONTAL STORAGE TANK
SELF-CONTAINED
NO SCALE

TANK FARM DATA/GRAVITY LOADS

VOL. (TANK STORAGE VOLUME)	10,000 GA
D (TANK DIAMETER)	8.00 F
L (TANK LENGTH)	26.67 F
H (OVERALL HEIGHT)	9.17 F
t (SHELL/HEAD THICKNESS)	$\frac{1}{4}$ / $\frac{5}{16}$ II
NO. OF SADDLES/SUPPORTS	3 EA
t_{cs} (CONC. SLAB THICKNESS)	1.0 FT
t_{ab} (AGGR. BASE THICKNESS)	.50 FT
G (SPECIFIC GRAVITY OF STORED LIQUID)	1.11
W_1 (WEIGHT OF EMPTY TANK)	25,200 LI
W_2 (WEIGHT OF LIQUID) 62.4(G)(VOL./7.48 gal./cu.ft.)	92,599 LB
W_3 (WEIGHT OF FULL TANK) $W_1 + W_2$	117,799 LE

REFERENCE DRAWINGS: UL10K96, MF06-515-0

NOTES: WEIGHT OF EMPTY TANK PER MANUFACTURER/SUPPLIER.
WEIGHT OF EMPTY TANK INCLUDES CONTAINMENT CHAMBER.
THIS SELF CONTAINED STORAGE TANK IS TO BE UL LISTED AND BEAR THE UL LABEL.

QUESTEC CORPORATION

CONSULTING ENGINEERS
Mechanical • Electrical • Civil • Environmental

4812 SANTANA CIRCLE, COLUMBIA, MO. 65203

Client SAFETY-KLEEN CORP. Pg. B-2

Project No. 9341.2 Date 4·12·93

Project Title PEKIN, IL.

Subject USED ANTIFREEZE TANK DESIGN ASSESSMENT

Designer TYJ Cx By SD Prelim ____ Final X

WIND ANALYSIS

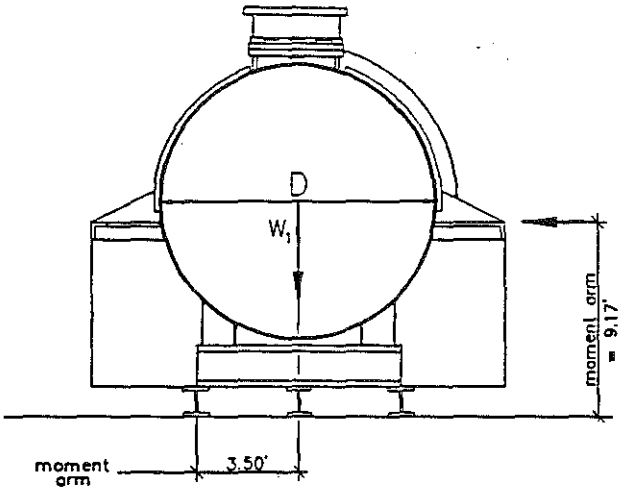

HORIZONTAL STORAGE TANK
SELF-CONTAINED
NO SCALE

REFERENCES

1. ASCE STD. 7-88 MIN. DESIGN LOADS FOR BLDGS. & OTHER STRUCTURES, JULY 1990, SECTION 6, pg. 7-22.
2. MARKS STD. HANDBOOK FOR MECHANICAL ENGINEERS, 8th ED., 1978, pg. 3-24 - 3-28.
3. TANK FARM DATA / GRAVITY LOADS (APPENDIX I
4. SAFETY-KLEEN DWG. NO. [illegible]

WIND FORCE

CATEGORY (TABLE 1, REF. 1) I

EXPOSURE (SECTION 6.5.3, REF. 1) C

HT. ABOVE GROUND: Z_1 9.17 Z_2 N/A

EXP. COEFF. (TABLE 6, REF. 1): K_{Z_1} N/A K_{Z_2} N/A K_Z 0.80

I (IMPORTANCE FACTOR, TABLE 5, REF. 1) 1.00

V (WIND SPEED, FIGURE 1, REF. 1) 80 M

$q_Z = .00256\, K_Z\, [(I)(V)]^2$ Z 10.0 (VELOCITY PRESS. @ Z ABOVE GROUND) 13.11 P

G_h (GUST RESPONSE FACTOR, TABLE 8, REF. 1) 1.32

$H \times D$ = 9.17 H/D 1.0 $D(q_Z)^{0.5}$ N/A

C_f (FORCE COEFF., TABLE 12, REF. 1) 1.3

A_f = (H)(L) (PROJECTED AREA NORMAL TO WIND) 245 S

$F = (q_Z)(G_h)(C_f)(A_f)$ (WIND FORCE TABLE 4, REF. 1) 5512 S

UESTEC CORPORATION

CONSULTING ENGINEERS
Mechanical • Electrical • Civil • Environmental

4812 SANTANA CIRCLE, COLUMBIA, MO. 65203

Client SAFETY-KLEEN CORP. Pg. B-3

Project No. 9341.2 Date 4-12-93

Project Title PEKIN, IL.

Subject USED ANTIFREEZE TANK DESIGN ASSESSMENT

Designer TYJ Cx By SD Prelim ____ Final X

OVERTURNING

OVERTURNING MOMENT ARM ≈ 9.17/2 = 4.59
RESISTING MOMENT ARM = 3.50'

M_O (OVERTURNING MOMENT) =
(F)(MOMENT ARM) = (F)(4.59) = (5,512)(4.59) = 25,300 F

M_R (RESISTING MOMENT) =
(W_1)(MOMENT ARM) = (25,200)(3.50) 88,200 F

M_O/M_R 0.29 ≤ 0.67 ? (SECTION 6.1.2, REF 1) YES

WIND ANCHORAGE REQUIRED ? NO

SLIDING

* f (COEFF. OF SLIDING FRICTION, REF. 2) 0.30

R_1 (RESISTING FORCE) =
$(W_1)(f)$ = (25,200)(.30) 7,560

F/R_1 0.43 ≤ 1.0 ? (SECTION 6.1.2, REF. 1) YES

WIND ANCHORAGE REQUIRED ? NO

* ESTIMATED VALUE FOR SLIDING SURFACES
(STEEL ON CONCRETE)

UESTEC CORPORATION
CONSULTING ENGINEERS
Mechanical • Electrical • Civil • Environmental
4812 SANTANA CIRCLE, COLUMBIA, MO. 65203

Client SAFETY-KLEEN CORP. Pg. ___

Project No. 9341.2 Date 4-12-93

Project Title PEKIN, IL.

Subject USED ANTIFREEZE TANK DESIGN ASSESSMENT

Designer TYJ Cx By SD Prelim ___ Final X

EARTHQUAKE ANALYSIS

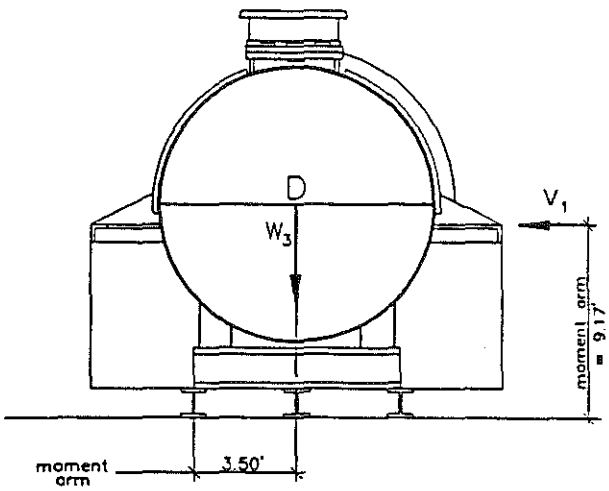

HORIZONTAL STORAGE TANK
SELF-CONTAINED
NO SCALE

REFERENCES

1. ASCE STD. 7-88 MIN. DESIGN LOADS FOR BLDGS. & OTHER STRUCTURES, JULY 1990, SECTION 9, pg. 32-41.
2. MARKS STD. HANDBOOK FOR MECHANICAL ENGINEERS, 8th ED., 1978, pg. 3-24-3-
3. TANK FARM DATA/GRAVITY LOADS (APPENDIX
4. SAFETY-KLEEN DWG. NO. [illegible]

EARTHQUAKE FORCE

SEISMIC ZONE (FIG. 14, REF. 1) 1

CATEGORY (TABLE 1, REF. 1) I

Z (SEISMIC ZONE COEFF., TABLE 21, REF. 1) 3/16

I (OCCUPANCY IMPORTANCE FACTOR, TABLE 22, REF. 1) 1.0

K (HORIZONTAL FORCE FACTOR, TABLE 23, REF. 1) 2.00

CS (COEFF. x SOIL FACTOR, SECTION 9.4.2, REF. 1) 0.14

$$V_1 = (Z)(I)(K)(CS)(W_3)$$ 6,184

$$= (3/16)(1.0)(2.00)(0.14)(117,799)$$

QUESTEC CORPORATION

CONSULTING ENGINEERS
Mechanical • Electrical • Civil • Environmental

4812 SANTANA CIRCLE, COLUMBIA, MO. 65203

Client SAFETY-KLEEN CORP. Pg. B-5

Project No. 9341.2 Date 4-12-95

Project Title PEKIN, IL.

Subject USED ANTIFREEZE TANK DESIGN ASSESSMENT

Designer TYJ Cx By SD Prelim ____ Final X

OVERTURNING

OVERTURNING MOMENT ARM = 9.17/2 = 4.59
RESISTING MOMENT ARM = 3.50'

M_O (OVERTURNING MOMENT) =
(V_1)(MOMENT ARM) = $(V_1)(4.59)$ = (6,184)(4.59) 28,354 F

M_R (RESISTING MOMENT) =
(W_3)(MOMENT ARM) = (117,799)(3.50) 412,797 F

M_O/M_R 0.07 ≤ 0.67 ? (FACTOR OF SAFETY = 1.5) YES

SEISMIC ANCHORAGE REQUIRED ? NO

SLIDING

* f (COEFF. OF SLIDING FRICTION, REF. 2) 0.30

R_1 (RESISTING FORCE) =
$(W_3)(f)$ = (117,799)(0.30) 35,340

V_1/R_1 0.17 ≤ 1.0 ? (FACTOR OF SAFETY = 1.0) YES

SEISMIC ANCHORAGE REQUIRED ? NO

* ESTIMATED VALUE FOR SLIDING SURFACES
(STEEL ON CONCRETE)

UESTEC CORPORATION

CONSULTING ENGINEERS
Mechanical • Electrical • Civil • Environmental

4812 SANTANA CIRCLE, COLUMBIA, MO. 65203

Client SAFETY-KLEEN CORP. Pg. B-6

Project No. 9341.2 Date 4-12-95

Project Title PEKIN, IL.

Subject USED ANTIFREEZE TANK DESIGN ASSESSMENT

Designer TYJ Cx By SD Prelim ____ Final X

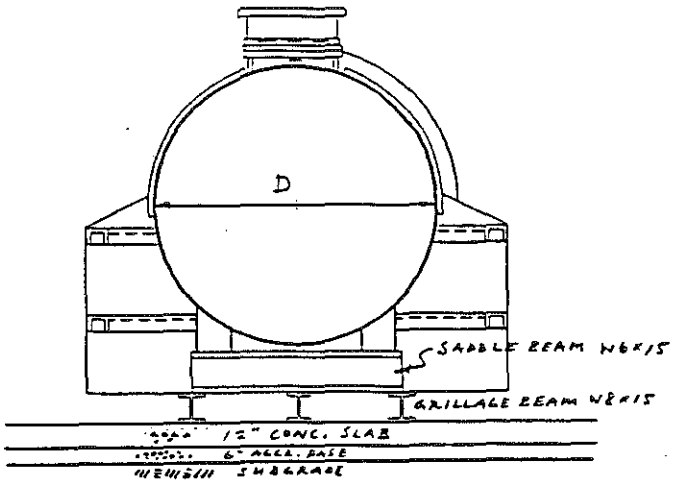

HORIZONTAL STORAGE TANK
SELF-CONTAINED
NO SCALE

FOUNDATION SLAB ANALYSIS

REFERENCES :

1.) ACI 318-89, BLDG. CODE REQUIREMENTS FOR REINF. CONCRETE
2.) PCA REPORT ISD 195.01D, SLAB THICKNESS DESIGN FOR INDUST. FLOORS ON GRADE, 1976
3.) TANK FARM DATA / GRAVITY LOADS, APPENDIX B
4.) REFERENCE DWGS. :
UL10K960, MF06-515-0

DESIGN CRITERIA / LOADING

Worst case loading for slab and subgrade induced by full gravity load only and full gravity plus earthquake combination. Increase allowable stresses 1/3 for full gravity + earthquake combination.
Include weight of concrete pad (16'-0" x 26'-4" effective area
Neglect weight of aggregate base.

f'_c = 4,000 psi @ 28 days f_y = 60,000 psi

Slab reinforcement - 4x4 W4xW4 W.W.F. (Top)
#5 @ 9" O.C. Short Direct.
#5 @ 24" O.C. Long Direct.] (Bottom

Net Allowable Soil Bearing Pressure = q_{allow} = 2,000 psf

* per soils report by WHITNEY & ASSOC. DATED 12-29-88.

W_1 = DL Tank = 25.2 k
W_2 = LL Tank = 92.6 k
W_{SLAB} = DL Conc. Pad = (1.0)(16.0)(26.67)(150 PCF) = 64
W_{TOTAL} = $W_1 + W_2 + W_{SLAB}$ = 181.8 k

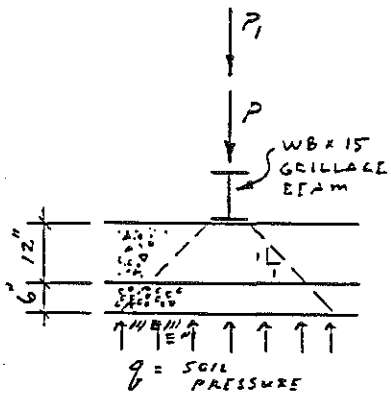

Assume W_{TOT} evenly distributed to 3 saddles
∴ $W_{TOT}/3$ = 181.8/3 = 60.6 k
Assume each grillage bm. carries 1/3 of gravity load
∴ P = 60.6/3 = 20.2 k
Assume lateral earthquake load unif. distributed
V_1 = 6.2/3 = 2.1 k/saddle (see E.Q. analysis)
Assume OUTSIDE grillage bm. takes all vert. effect of V_1 since tank has no anchorage
P_1 = V_1 (9.17/2)/3.5 = 8.1 k

P_{TOT} = P + P_1 = 20.2 + 8.1 = 28.3 k.

SOIL BEARING

Assume 1:1 slope for load distribution (conservative due to concrete slab bending strength and rigidity). Assume load uniformly distributed at subgrade level. Calcs. based on tank mfr. information – saddle beam = 6" wide and grillage beam = 4" wide. Assume load distribution @ 45° through grillage beam along long axis from top to bottom. Therefore uniformly distributed load over 22" x 4" area at bottom of bm.
A = contact area = (.33 + 2(1.5))(1.83 + 2(1.5)) = 16.08 s

GRAVITY LOAD CASE $q = P/A$ = 20,200/16.08 = 1256 p
Is $q < q_{allow}$ = 1256 < 2000? YES
GRAVITY + E.Q. CASE $q_{TOT} = P_{TOT}/A$ = 28,300/16.08 = 1760 p
Is $q_{TOT} < (1.33)\, q_{allow}$ = 1760 < 2600? YES

IS SOIL BEARING OK? YES

QUESTEC CORPORATION
CONSULTING ENGINEERS
Mechanical • Electrical • Civil • Environmental
4812 SANTANA CIRCLE, COLUMBIA, MO. 65203

Client SAFETY-KLEEN CORP. Pg. B-8
Project No. 9341.2 Date 4-12-93
Project Title PEKIN, IL.
Subject USED ANTIFREEZE TANK DESIGN ASSESSMENT
Designer TYJ Cx By SD Prelim ____ Final X

FOUNDATION SLAB BEARING

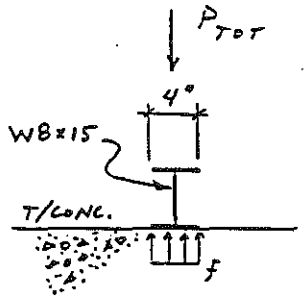

Conc. Bearing Stress = $f_{allow} = 0.3 f'_c = 0.3(4{,}000) = \underline{1200}$
(ACI 318-89 Appendix A, A.3.1(c), REF. 1)
critical pressure under center of grillage beam induced by full gravity + earthquake combination.
assume uniform load distribution, neglect additional bearing capacity provided by wider supporting surface under loaded area (conser

A = contact area = $(.33)(1.83) = 0.60\ ft^2 = \underline{87}\ in^2$
$P_{TOT} = 28.3^k = 28{,}300\ lb$
f = bearing stress = $P_{TOT}/A = 28{,}300/87 = \underline{325}$ psi

$f = 325$ psi $\leq f_{allow} = 1200$ psi ? YES

SLAB BEARING OK ? YES

FOUNDATION SLAB BENDING

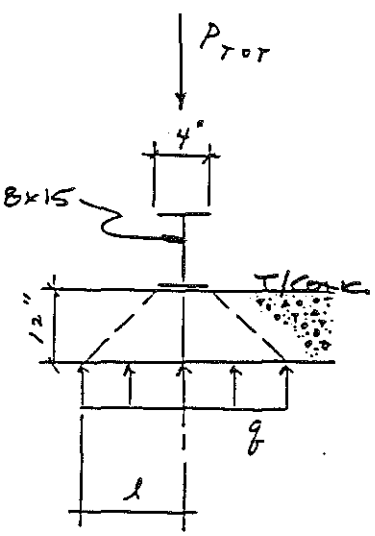

same conditions and assumptions as above
assume well compacted aggr. base, unif. dist. load @ bot. slab
neglect slab reinf. and bending strength (conserv.)
analyze 1' wide slab strip, allow. flex. strength = MR
MR = Mod. of Rupture = $9\sqrt{f'_c} = 9\sqrt{4000} = \underline{569}$ psi
(PCA Report ISD 195.01D, pg. 2, REF. 2)
$P_{TOT} = 28.3^k$, $P_{TOT}/1'$ STRIP $= 28.3^k/1.83 = 15.50^k$
A = contact area @ TOP OF AGGR. BASE = [1' wide × (.33 + 1.0 + 1.0)] = 2.33 sf
$q = P_{TOT}/A = 28.3/2.33 = 12.1$ k/f
assume crit. section for bending @ ℄ grillage beam
neglect continuity of slab (conservative)
$l = 1.0 + .33/2 = 1.17'$, $M = ql^2/2 = (12.1)(1.17)^2/2 = 8.28$ ft-k
$S = bd^2/6 = 12(12)^2/6 = 288\ in^3$
$f_b = 12000\,M/S = 12000(8.28)/288 = 345$ psi

$f_b = 345$ psi $\leq$ MR = 569 psi ? YES SLAB BENDING OK ? YES

NOTE: Slab shear OK by inspection

QUESTEC CORPORATION
CONSULTING ENGINEERS
Mechanical • Electrical • Civil • Environmental
4812 SANTANA CIRCLE, COLUMBIA, MO. 65203

Client SAFETY-KLEEN CORP. Pg. —

Project No. 9341.2 Date

Project Title PEKIN, IL.

Subject USED ANTIFREEZE TANK DESIGN ASSESSMENT

Designer TYJ Cx By SD Prelim Final X

SECONDARY CONTAINMENT CALCULATIONS – ABOVEGROUND HORIZONTAL STORAGE TAN

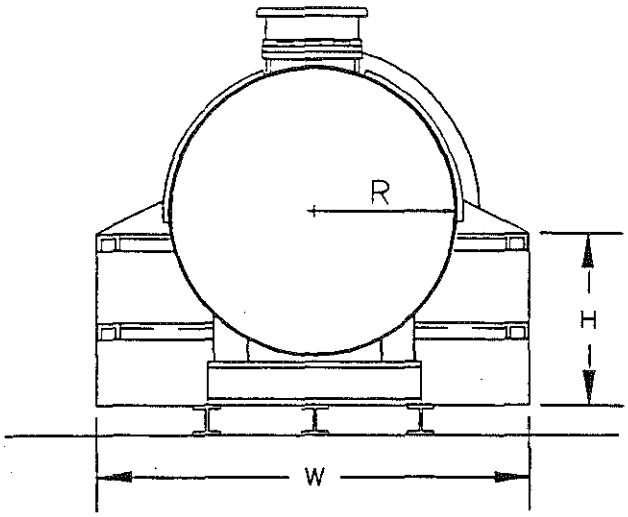

HORIZONTAL STORAGE TANK
SELF-CONTAINED
NO SCALE

NOMINAL 10,000 GALLON TANK
REFERENCE: DRAWING NO. MF06-101-1

TANK DATA

L_1	(secondary containment length)	35.00'
L_2	(tank length)	26.67'
R	(tank radius)	4.00'
W	(secondary containment width)	10.83'
H	(secondary containment height)	4.00'

FORMULAS USED

SECONDARY CONTAINMENT VOLUME = $(W)(H)(L_1)(7.48 gal./cf.)$

MISC. DISPLACEMENT VOLUME (supports, etc.) = 1% OF SECONDARY CONTAINMENT VOLUM

TANK VOLUME = $\pi (R^2)(L_2)(7.48 gal./cf.)$

CALCULATIONS

SECONDARY CONTAINMENT VOLUME = (10.83)(4.00)(35.00)(7.48) = (+) 11,341 GAL.

MISCELLANEOUS DISPLACEMENT VOLUME = (11,341)(0.01) = (−) 113 GAL.

TANK VOLUME = $\pi (4.00)^2 (26.67)(7.48)$ = (−) 10,028 GAL.

TOTAL EXCESS CONTAIMENT VOLUME = (+) 1,200 GAL.

Exhibit E-8
Installation Assessment of Used Antifreeze Tank System

INSTALLATION ASSESSMENT
USED ANTIFREEZE STORAGE TANK SYSTEM
SAFETY-KLEEN CORPORATION
PEKIN, ILLINOIS
SERVICE CENTER

Facility No. 5-136-01

Prepared by:

QuesTec Corporation
4812 Santana Circle
Columbia, Missouri 65203
Project No. 9341.6

April 14, 1993

INSTALLATION ASSESSMENT

TABLE OF CONTENTS

Title	Page No.
Tank System Certification	*i*
System Description	1
Installation Assessment	1
1. Installation Inspection	2
2. Tightness Testing	3
3. Ancillary Equipment	3
Secondary Containment Assessment	4
1. Required Date	4
2. Compatibility of Construction Materials	4
3. Strength and Foundation	4
4. Leak Detection	4
5. Liquid Removal	4
6. Requirements for a Vault System	4
7. Ancillary Equipment	5
Conclusion of Assessment	5
Exhibits	
Appendix A - Design Documentation	
Appendix B - Field Data	

EXHIBITS

Title	Exhibit No.
Site Plan	1
Tank Farm Plan	2
System Schematic	3

TANK SYSTEM CERTIFICATION

I have conducted the installation assessment dated April 14, 1993 of the used antifreeze storage tank system at the Safety-Kleen Corporation facility in Pekin, Illinois. The EPA ID Number for the facility is ILD 093862811.

With regard to this duty, I certify under penalty of law that this document and all attachments were prepared under my direction or supervision in accordance with a system designed to assure that qualified personnel properly gather and evaluate the information submitted. Based on my inquiry of the person or persons who manage the system, or those persons directly responsible for gathering the information, the information submitted is, to be the best of my knowledge and belief, true, accurate, and complete. I am aware that there are significant penalties for submitting false information, including the possibility of fine and imprisonment for knowing violations.

Rick A. Bartelt
Registered Professional Engineer
Illinois Registration Number 062-045992
QuesTec Corporation
4812 Santana Circle
Columbia, Missouri 65203

RICK A. BARTELT
062-045992
REGISTERED
PROFESSIONAL
ENGINEER
STATE OF ILLINOIS

4-14-93

This report documents the installation assessment for the used antifreeze storage tank system at the Safety-Kleen facility in Pekin, Illinois. The assessment was conducted to address the requirements of 40 CFR 265.192, 40 CFR 265.193, and the corresponding requirements of the Illinois Rules and Regulations Title 35 Subtitle 35 Chapter I Part 724.292 and 293.

SYSTEM DESCRIPTION

Liquid used antifreeze is picked up from offsite generators by tank truck and brought to the Safety-Kleen Service Center where it is transferred to a steel, above ground horizontal storage tank through a steel piping arrangement. Periodically, the waste will be transferred from this storage tank to a large tanker truck by which it is taken to a recycling facility. The accumulated sludge and solids are removed from the tank through the manway and taken offsite for disposal.

The storage tank is a horizontal cylinder with flat ends having a capacity of 10,000 gallons. The tank sits on three saddles in a steel rectangular structure that serves as secondary containment. The self contained tank sits on three 8" WF beams.

The tank is vented to the atmosphere, and it is equipped with a gauge for daily liquid level readings and a liquid level alarm to help prevent tank over fills.

A site plan, a tank farm plan, and a system piping and instrumentation diagram can be found in the exhibit section, exhibits 1, 2 and 3 respectively.

INSTALLATION ASSESSMENT - [40 CFR 265.192]

On March 11 and 25, 1993 visual inspections were made of the tank system by QuesTec Corporation. First, the tank system was evaluated for compliance with the design drawings and the applicable standards. Second, the system was examined for weld breaks, punctures, cracks, leaks, corrosion, erosion, scrapes of protective coatings, and other structural damage or inadequate construction. The means of inspection was both visual and by the use of an ultrasonic thickness meter for measurement of the tank and pipe wall and secondary containment thickness. The findings are documented in the inspection record, see Appendix B.

1. Installation inspection - [40 CFR 265.192(b)]

The construction was inspected and compared with design drawings. There are a few noteworthy but minor deviations from the design drawings in Appendix A. They are as follows:

1. On Drawing No. 515-0, "Horizontal Tank Pad Partial Site Plan and Details", Sheet No. 54:

   a. The distance between the concrete tank pad and the existing building was 1'-10", not 2'-0" as shown.

   b. Two concrete filled bumper posts are shown on the north end of the concrete tank pad. A third concrete filled steel bumper post was installed at the northwest corner of the access container.

   c. The concrete tank pad dimensions are 15'-10" x 47'-11" not 16'-0" x 48'-0" as shown.

2. On Drawing No. 101-0, "10,000 Gallon Horizontal Storage Tank", Sheet No. 55:

   a. The actual number and location of tank couplings and manholes vary.

   b. The secondary containment chamber measured 34'-11" x 10'-9" x 4'-2", not 35'-0" x 10'-0" x 4'-0" as shown.

   c. The tank length measured 26'-10", not 26'-8" as shown.

3. On Drawing No. 240-0, "Tank Farm Piping Plan and Details", Sheet No. 59:

   a. The normal vent and the emergency vent are mounted in a different location than shown on the drawing.

   b. The varec gauge head is mounted in a different location than shown on the drawing.

   c. The actual pipe routing varies slightly from that shown on the drawing.

These minor deviations from the design drawings are not considered to have an impact on the tank system performance or operation.

The tank and piping were visually inspected, air pressure tested by others and wall thicknesses were measured to find weld breaks, punctures, cracks, corrosion, or any other defects in the tank and piping. No defects were found. Results of the air tightness tests, and ultrasonic thickness measurements are in Appendix B. The successful air pressure tightness test indicates the integrity of the tank and piping and lack of weld breaks, punctures, cracks or corrosion. The tank and pipe are new and the tank has a primer coat of paint. The primer intermediate and finish coats will be applied as required when weather permits. The wall thickness measurements indicate wall thickness is adequate and that there is no significant wall thinning due to corrosion.

The inspection of the secondary containment structure is dealt with in detail under the 265.193 analysis. In summary, the secondary containment is adequate and without cracks, scrapes, or other defects.

Overall, the construction essentially conforms to the design drawings and the applicable codes and has been performed in a workmanlike manner. There are no signs of structural damage or inadequate construction or installation.

2. Tightness Testing - [40 CFR 265.192(d)]

The tanks and piping were successfully tightness tested. See test report in Appendix B.

3. Ancillary equipment - [40 CFR 265.192(e)]

The piping is supported at a minimum of every 10'-0" ensuring its protection against excessive stress due to settlement or vibration. All of the piping is protected from physical damage by concrete filled steel bumper posts. The length of piping is short and one end is not fixed which allows for expansion and contraction.

SECONDARY CONTAINMENT SYSTEM ASSESSMENT

1. Required date - [40 CFR 265.193(a)(1)]

   Secondary containment that meets the requirements of 40 CFR 265.193 must be provided prior to the tank being put into service.

2. Compatibility of the construction materials with used antifreeze - [40 CFR 265.193(c)(1)]

   For discussion of compatibility of materials see the Design Assessment by QuesTec, dated April 12, 1993.

3. Strength and Foundation - [40 CFR 265.193(c)(1)], [40 CFR 265.193(c)(2)]

   The foundation that the tank rests on was essentially constructed per the design drawings except for the minor deviations listed above. These deviations do not inhibit the foundation from adequately supporting the weight of a full tank. The tank and containment structure was UL labeled. Therefore, it should be capable of withstanding the hydrostatic pressure from the containment chamber being full of water.

4. Leak detection - [40 CFR 265.193(c)(3)]

   The tank system and the secondary containment system are visually inspected on a daily basis for the presence of any release of hazardous waste or accumulated liquid in the secondary containment.

5. Liquid removal - [40 CFR 265.193(c)(4)]

   The secondary containment has a small sump for efficient removal of accumulated liquids. The liquid is removed from the secondary containment with a portable pump or with a vacuum truck.

6. Requirements for a vault system - [40 CFR 265.193(e)(2)]

   (i) The secondary containment system has sufficient design capacity to contain 100
   (ii) percent of the capacity of the tank. The containment is covered, and thereby prevents accumulation of precipitation. See Appendix B for field measurements of the secondary containment and containment calculations.

(iii) There were no joints in the containment structure.

(iv) The containment structure is made of carbon steel which is compatible with the antifreeze and should be water tight.

(v) The liquid being stored in the tank farm is used antifreeze. Used antifreeze is hazardous due to EP toxicity. It is not reactive or ignitable per the definitions in 40 CFR 261.21 and 261.23. Since the liquid being stored in the tank farm is not ignitable or reactive, the vault does not need to be provided with a means to protect against the formation of and ignition of vapors within the vault. In addition, the vault has rain shielded vents which allow for some natural ventilation.

(vi) The tank farm is not subject to hydrostatic pressure, therefore it does not need to be provided with an exterior moisture barrier or be otherwise designed or operated to prevent migration of moisture into the tank farm.

7. Ancillary equipment - [40 CFR 265.193(f)]

All piping is welded. The valves are located in the tank access container.

CONCLUSION OF ASSESSMENT

Per the information contained in this report and provided the tank and piping are painted, the used antifreeze system at the Safety-Kleen Branch in Pekin, Illinois appears to be installed in accordance with the design drawings and the applicable codes with the minor deviations listed above, and to have sufficient structural strength and compatibility with the waste being stored. The secondary containment appears to be installed to prevent migration of wastes or accumulated liquid out of the system. It appears that the tank system is in compliance with 40 CFR 265.192, 265.193.

APPENDIX A

Design Documentation

APPENDIX A

Design Documentation

The following drawings provided by Safety-Kleen describing the used antifreeze tank system design, and other design data, were used in the installation assessment.

Title	Page No.
Site Layout Plan, MF06-002-0	A-1
Site Electrical Plan, MF06-007-0	A-2
Horizontal Tank Pad Partial Site Plan and Details, MF06-515-0	A-3
10,000 Gallon Horizontal Storage Tank, MF06-101-0	A-4
Tank Farm Piping Plan and Details, MF06-240-0	A-5
Varec Gauge Details for Horizontal Tank, MF06-242-0	A-6
Tank Farm Electrical Plans, MF06-460-0	A-7
Tank Farm Sign Location and Details, MF06-915-0	A-8
Antifreeze/Oil Tank HLA System Diagram, 4501	A-9
Painting Specification	A-10
Process Piping Specification	A-19
Horizontal Tank and Pipe Testing Specification	A-22
Partial Flood Plain Map, Panel #1708150100B	A-25

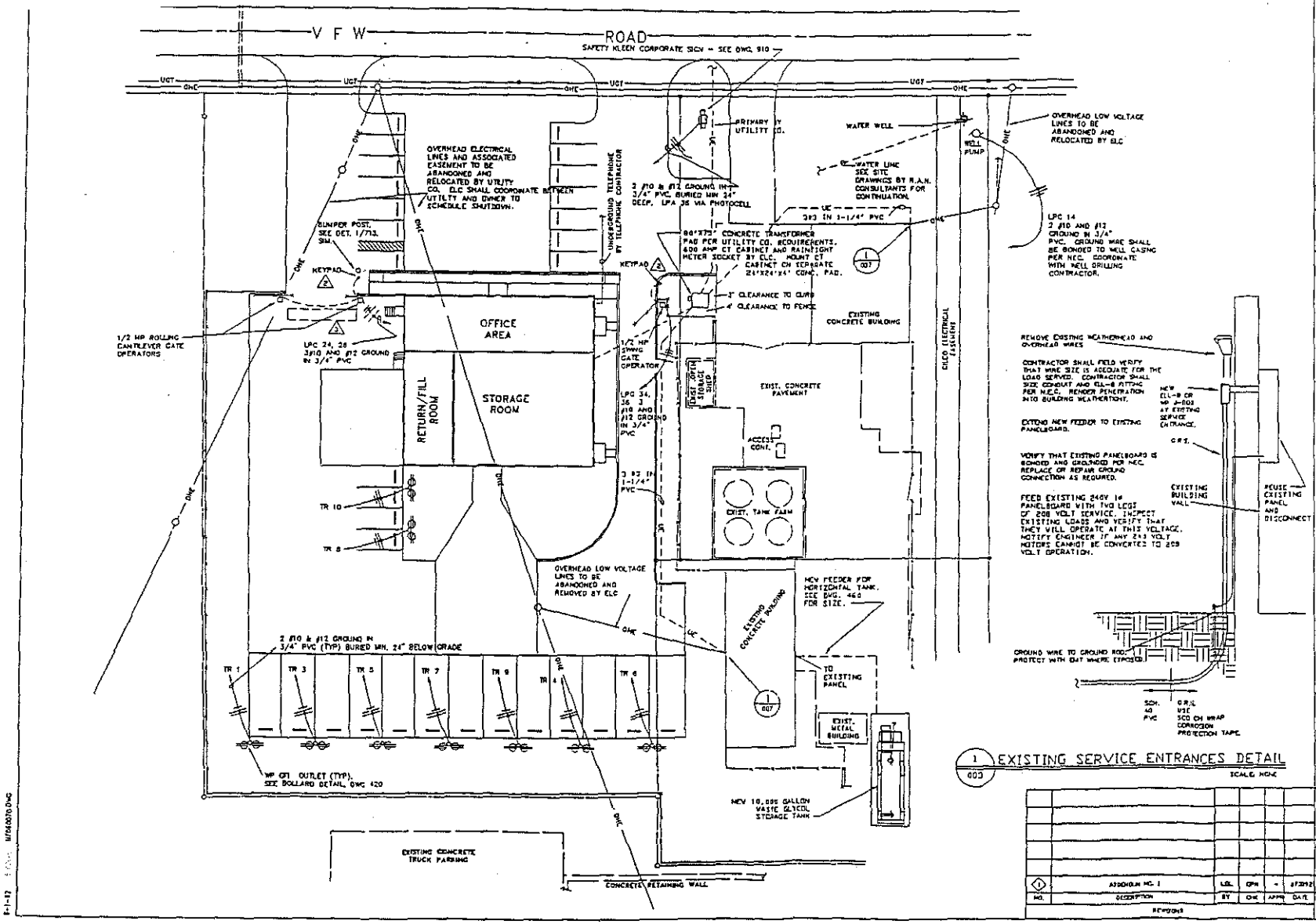

1 / 603 EXISTING SERVICE ENTRANCES DETAIL

SCALE NONE

NEW BUILDING CONSOLIDATED DEMAND: 138 KVA AT 208 V 3# 383 AMPS

NORTHEAST BUILDING DEMAND (FROM CILCO DEMAND METERING RECORDS) 13.8 KVA AT 240V 1 # 57.5 AMPS

SOUTHEAST BUILDING DEMAND (FROM CILCO DEMAND METERING RECORDS) 5.1 KVA AT 240V 1# 21.25 AMPS

TOTAL, ALLOWING FOR UNBALANCED LOAD: (FIGURE REPRESENTS CURRENT IN THE LEG WITH THE MOST UNBALANCE) 467.75 AMPS AT 208V 3#

EQUIVALENT TO 169 KVA

GENERAL NOTES

THIS DRAWING CONTAINS INFORMATION PROPRIETARY TO SAFETY-KLEEN CORPORATION. ANY REPRODUCTION, DISCLOSURE OR USE OF THIS DRAWING IS EXPRESSLY PROHIBITED EXCEPT BY SAFETY-KLEEN OR AS SAFETY-KLEEN MAY AGREE IN WRITING.

1. ALL EXISTING UNDERGROUND UTILITIES SHOWN HAVE BEEN PLOTTED FROM AVAILABLE INFORMATION AND THEIR LOCATIONS MUST BE CONSIDERED APPROXIMATE ONLY. THE VERIFICATION OF ALL UTILITIES SHOWN OR NOT SHOWN SHALL BE THE RESPONSIBILITY OF THE CONTRACTOR AND SHALL BE LOCATED PRIOR TO ANY GRADING OR CONSTRUCTION OF IMPROVEMENTS.

2. COORDINATE EXACT KEYPAD LOCATIONS WITH BRANCH MANAGER.

3. INDICATES LOCATION OF DETECTION LOOP. INSTALL PER MANUFACTURER'S REQUIREMENTS. COORDINATE WITH OTHER CONTRACTORS. NOT TO SCALE.

4. ELECTRICAL CONTRACTOR SHALL INSTALL ALL POWER AND CONTROL WIRING FOR ELECTRICALLY OPERATED GATES AND RUN FEEDERS AND CONTROL WIRING BACK TO MAIN BUILDING.

5. ALL JUNCTION BOXES AND RECEPTACLES MOUNTED OUTDOORS SHALL BE WEATHERPROOF AND GFI PROTECTED.

6. ALL ELECTRICAL CONDUIT ON THIS DRAWING SHALL BE SCHEDULE 40 PVC UNLESS OTHERWISE NOTED. MINIMUM DEPTH OF BURIAL SHALL BE 24" BELOW GRADE.

7. CONTROL STATION FOR ELECTRICALLY OPERATED GATES SHALL BE INSTALLED IN THE CLERICAL OFFICE. EXACT LOCATION TO BE DETERMINED BY BRANCH MANAGER.

8. CONTRACTOR SHALL MINIMIZE INTERRUPTION OF UTILITIES TO EXISTING BUILDINGS. SCHEDULE SWITCHING FROM EXISTING ELECTRICAL SERVICE TO NEW ELECTRICAL SERVICE AT LEAST SEVEN DAYS IN ADVANCE WITH BRANCH MANAGER. THE BRANCH MANAGER MAY REQUIRE SERVICE TO BE SWITCHED OUTSIDE OF NORMAL WORKING HOURS TO MINIMIZE INTERRUPTION TO BUSINESS.

9. INSTALL 600 AMP WP CT CABINET AND UTILITY METER ADJACENT TO PADMOUNTED TRANSFORMER. SUPPORT AS REQUIRED ON CONC. PAD.

10. GATE OPERATORS, KEY PADS, DETECTION LOOPS AND OTHER ACCESSORIES TO BE FURNISHED BY GATE MANUFACTURER AND INSTALLED BY ELC. SEE SITE DRAWINGS.

QUESTEC

NO.	DESCRIPTION	BY	CHK	APPR	DATE
1	ADDENDUM NO. 1	LDL	CPR	-	07/29/92

REVISIONS

TITLE: SITE ELECTRICAL PLAN

SAFETY-KLEEN CORP.

SCALE	BY	CHKD	P.E. APPR	OP. APPR	DATE
1" = 20'-0"	Questec				7-01-92

SERVICE CENTER LOCATION: PEKIN, IL

DWG. REV NO.: WF06-007-0

SHEET NO.: 3

8-1-92 WF06007D.DWG

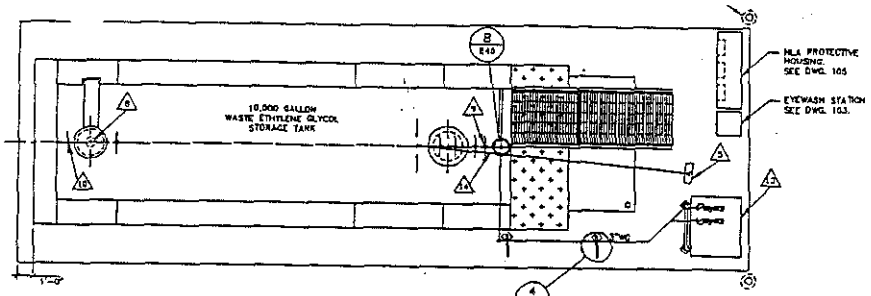

PIPING PLAN

SCALE: 3/4" = 1'-0"

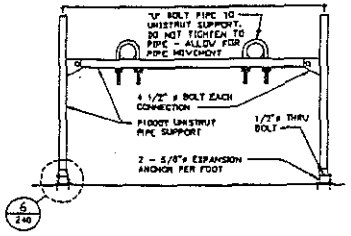

PIPE SUPPORT DETAIL TYPICAL

SCALE: 3/4" = 1'-0"

		MANUF. MODEL NUMBER	REMARKS
1	3" FLANGED CAMLOCK COUPLING WITH CAP AND CHAIN		
2	3" CAST STEEL BALL VALVE		FURNISH WITH LOCKABLE HANDLE
3	3" 150# CAST STEEL SWING CHECK VALVE		
4	TANK LEVEL GAUGE		SEE DETAILS, DWG. 242
5	3" NORMAL VENT		3"= 2oz. PRESSURE, 1oz. VACUUM

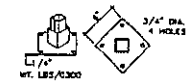

DETAIL

NO SCALE

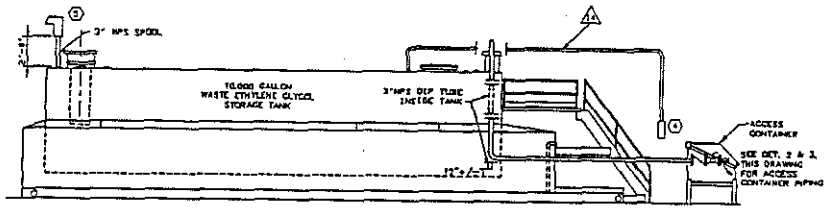

WASTE GLYCOL PIPING - ELEVATION

SCALE: 3/4" = 1'-0"

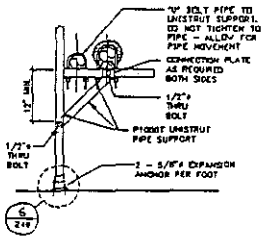

PIPE SUPPORT DETAIL TYPICAL

SCALE: 3/4" = 1'-0"

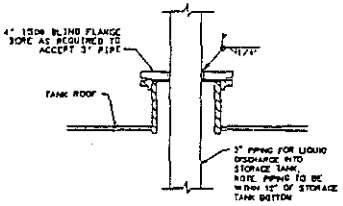

TANK DOME PIPING PENETRATION DETAIL

SCALE: NONE

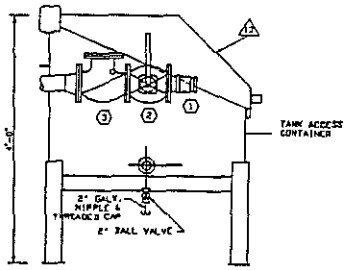

ACCESS CONTAINER DETAIL - ELEVATION

SCALE: NONE

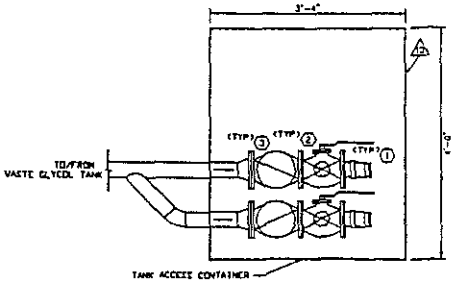

ACCESS CONTAINER PIPING DETAIL - PLAN

SCALE: NONE

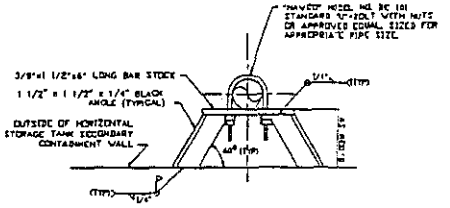

TANK PIPE SUPPORT DETAIL

SCALE: NONE

GENERAL NOTES

THIS DRAWING CONTAINS INFORMATION PROPRIETARY TO SAFETY-KLEEN CORPORATION. ANY REPRODUCTION, DISCLOSURE OR USE OF THIS DRAWING IS EXPRESSLY PROHIBITED EXCEPT BY SAFETY-KLEEN OR AS SAFETY-KLEEN MAY AGREE IN WRITING.

1. SEE DWG. 101 FOR STORAGE TANK DETAILS.
2. ALL PIPING SHALL BE ASTM A53, GR.B, MINIMUM.
3. ALL CHANGES IN PIPING DIRECTION SHALL BE MADE USING 2 45° ELBOWS OR LONG RADIUS 90s.
4. ALL PROCESS PIPING CONNECTIONS OUTSIDE CONTAINMENT SHALL BE WELDED.
5. TANK LEVEL GAUGE. SEE DWG. 242.
6. FIELD WELD PIPE SUPPORT TO TANK AS REQUIRED. SEE DET. 7, THIS DWG.
7. SUPPORT PIPING AS SHOWN, BUT NOT MORE THAN 8'-0" O.C. UNLESS OTHERWISE NOTED.
8. INSTALL EMERGENCY VENT FURNISHED WITH TANK.
9. INSTALL OWNER FURNISHED HIGH LEVEL ALARM PROBE.
10. INSTALL NORMAL TANK VENT.
11. PAINT PIPING PER SPECIFICATIONS.
12. TYPICAL BUMPER POST. SEE DET. 2, DWG. 513.
13. INSTALL OWNER FURNISHED ACCESS CONTAINER.
14. INSTALL LEVEL GAUGE PIPING PLUMB AND LEVEL.

QUESTEC

REV.	DESCRIPTION	BY	CHK	APPR	DATE
1	ADDENDUM NO. 1	M.G.	DFN	-	1/23/92

REVISIONS

TITLE: TANK FARM PIPING PLAN AND DETAILS

SAFETY-KLEEN CORP.

SCALE	BY	CHKD	P.E. APPR	OP. APPR	DATE
1/4" = 1'-0"					2-1-92

SERVICE CENTER LOCATION: PEKIN, IL

SC-DWG-REV NO.: MF06-240-0

SHEET NO.: 59

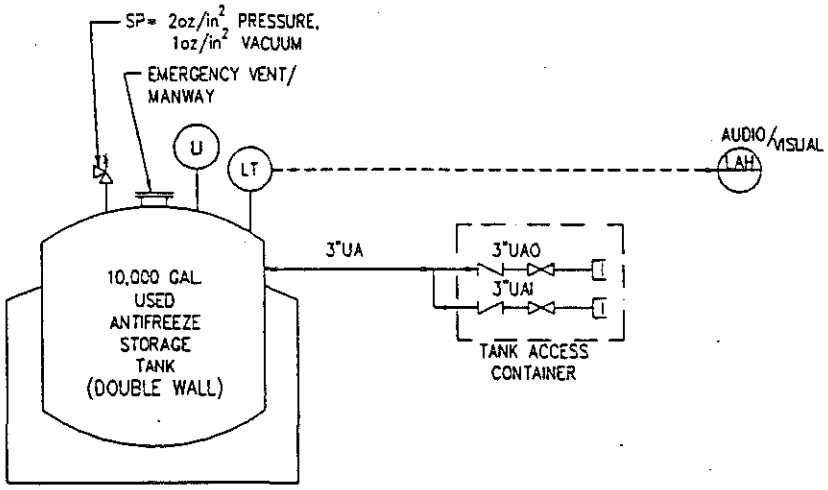

LEGEND

- pump
- field instrumentation
- panel or wall mounted instrumentation
- gate valve
- ball valve
- check valve
- press/vac vent
- suction strainer
- flexible hose
- cam-lock fitting
- process piping
- control wiring

LI – level indicator
LT – level transmitter
LAH – level alarm-high
UMS – used mineral spirits in
UMS – used mineral spirits out
UAI – used antifreeze in
UAO – used antifreeze out

PIPING AND INSTRUMENTATION DIAGRAM

SED ANTIFREEZE TANK SYSTEM DESIGN ASSESSMENT

)R SAFETY-KLEEN SERVICE CENTER AT PEKIN, IL.

WN BY : TYJ
E : 4-7-93
CKED BY: RAB
E : 4-8-93

UESTEC CORPORATION
CONSULTING ENGINEERS
4812 Santana Circle • Columbia • MO 65203 • (314) 875-0260

EXHIBIT
3

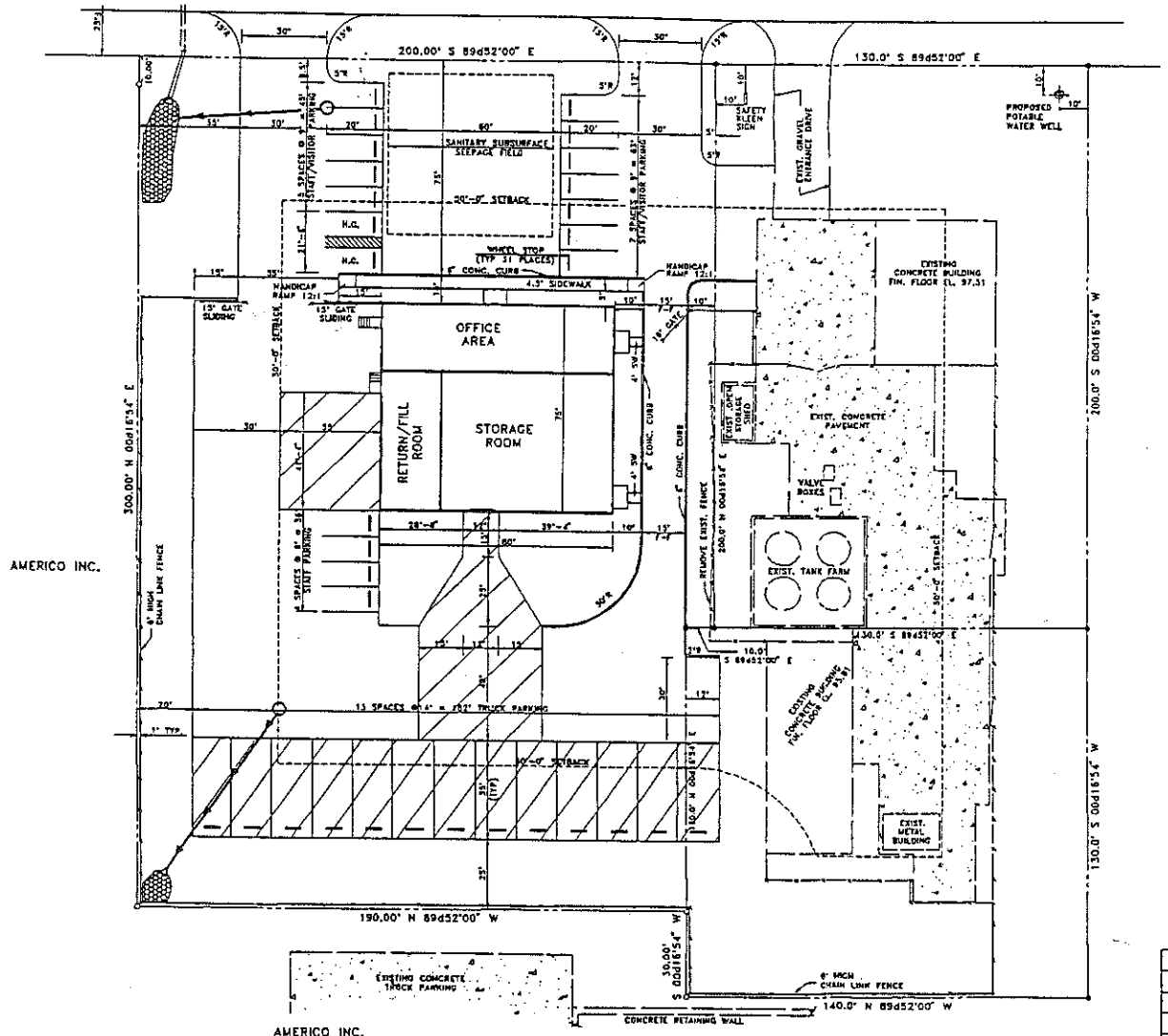

SITE LAYOUT PLAN

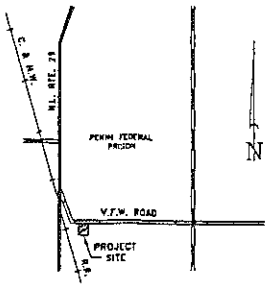

VICINITY MAP

NO SCALE

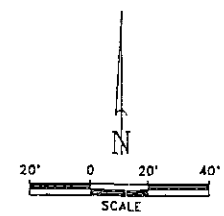

1. EXISTING IMPROVEMENTS, CONTOURS, ELEVATIONS AND SITE CONDITIONS ARE PER TOPOGRAPHIC AND BOUNDARY SURVEY COMPLETED BY KLIEN LAND SURVEYING FOR SAFETY-KLEEN CORP. ON 1-23-89 AND REVISED 3-18-89.

LEGEND

- EXISTING CONCRETE PAVEMENT
- PROPOSED CONCRETE PAVEMENT
- PROPOSED ASPHALT
- PROPOSED 6" CURB

R.A.N. CONSULTANTS, INC.
engineers land surveyors

NO.	DESCRIPTION	BY	CHK	APPR	DATE
	REVISIONS				

TITLE: SITE LAYOUT PLAN

SAFETY-KLEEN CORP.

SCALE	BY	CHKD	P.E. APPR	OP. APPR	DATE
1"=20'-0"	SFF	JOS	JOS		7-1-93

SERVICE CENTER LOCATION	SC-DWG-REV NO.	SHEET NO.
PEKIN, IL.	MF06-002-0	2A

08-03-93 11:15AM MF06002D.DWG

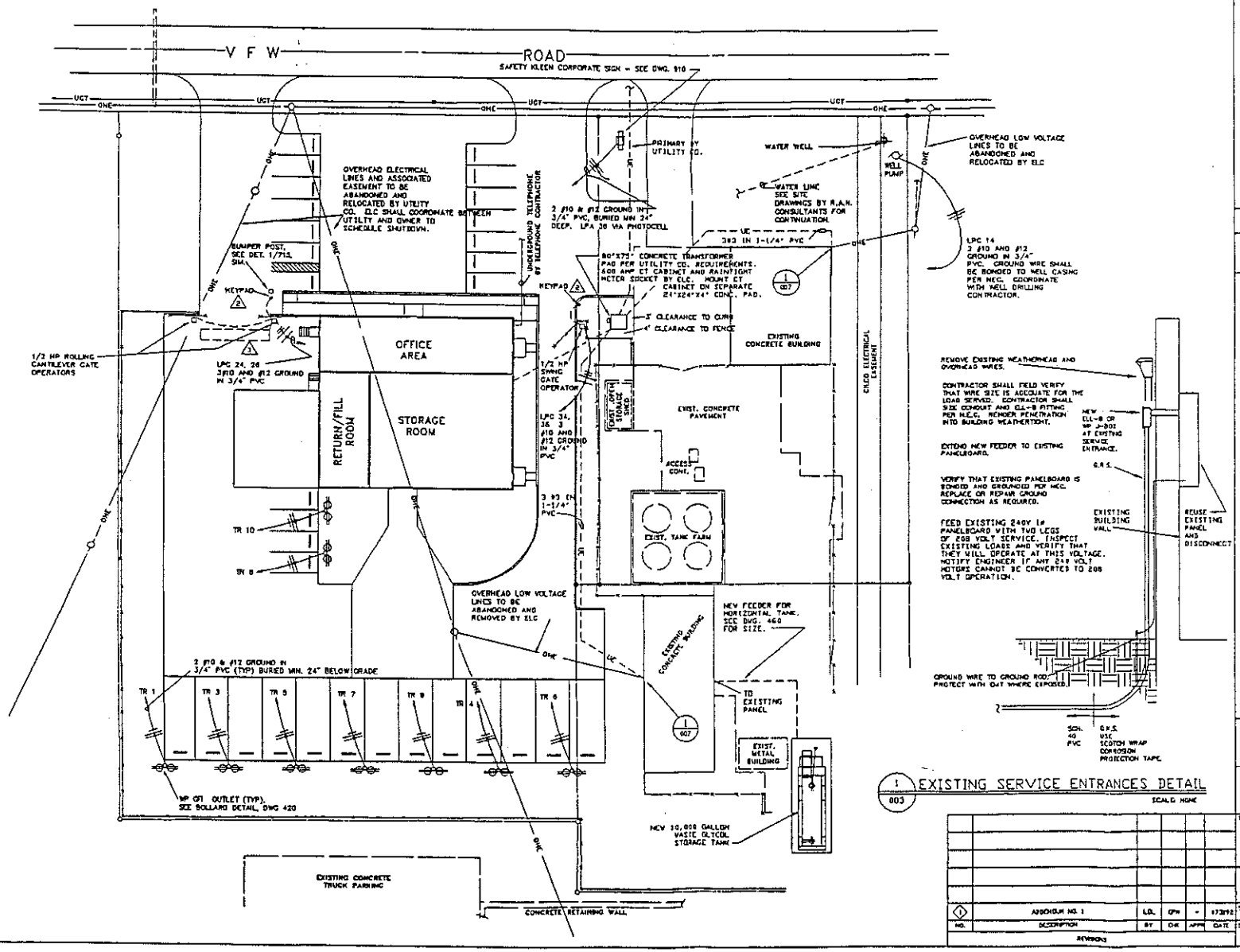

1 / 003 EXISTING SERVICE ENTRANCES DETAIL

SCALE: NONE

NEW BUILDING CALCULATED DEMAND: 138 KVA AT 208 V 3ø 383 AMPS

NORTHEAST BUILDING DEMAND (FROM CILCO DEMAND METERING RECORDS) 13.8 KVA AT 240V 1ø 57.5 AMPS

SOUTHEAST BUILDING DEMAND (FROM CILCO DEMAND METERING RECORDS) 5.1 KVA AT 240V 1ø 21.25 AMPS

TOTAL, ALLOWING FOR UNBALANCED LOAD: (FIGURE REPRESENTS CURRENT IN THE LEG WITH THE MOST UNBALANCE) 467.75 AMPS AT 208V 3ø

EQUIVALENT TO 165 KVA

GENERAL NOTES

THIS DRAWING CONTAINS INFORMATION PROPRIETARY TO SAFETY-KLEEN CORPORATION. ANY REPRODUCTION, DISCLOSURE OR USE OF THIS DRAWING IS EXPRESSLY PROHIBITED EXCEPT BY SAFETY-KLEEN OR AS SAFETY-KLEEN MAY AGREE IN WRITING.

1. ALL EXISTING UNDERGROUND UTILITIES SHOWN HAVE BEEN PLOTTED FROM AVAILABLE INFORMATION AND THEIR LOCATIONS MUST BE CONSIDERED APPROXIMATE ONLY. THE VERIFICATION OF ALL UTILITIES SHOWN OR NOT SHOWN SHALL BE THE RESPONSIBILITY OF THE CONTRACTOR AND SHALL BE LOCATED PRIOR TO ANY GRADING OR CONSTRUCTION OF IMPROVEMENTS.

2. COORDINATE EXACT KEYPAD LOCATIONS WITH BRANCH MANAGER.

3. INDICATES LOCATION OF DETECTION LOOP. INSTALL PER MANUFACTURER'S REQUIREMENTS. COORDINATE WITH OTHER CONTRACTORS. NOT TO SCALE.

4. ELECTRICAL CONTRACTOR SHALL INSTALL ALL POWER AND CONTROL WIRING FOR ELECTRICALLY OPERATED GATES AND RUN FEEDERS AND CONTROL WIRING BACK TO MAIN BUILDING.

5. ALL JUNCTION BOXES AND RECEPTACLES MOUNTED OUTDOORS SHALL BE WEATHERPROOF AND GFI PROTECTED.

6. ALL ELECTRICAL CONDUIT ON THIS DRAWING SHALL BE SCHEDULE 40 PVC UNLESS OTHERWISE NOTED. MINIMUM DEPTH OF BURIAL SHALL BE 24" BELOW GRADE.

7. CONTROL STATION FOR ELECTRICALLY OPERATED GATES SHALL BE INSTALLED IN THE CLERICAL OFFICE. EXACT LOCATION TO BE DETERMINED BY BRANCH MANAGER.

8. CONTRACTOR SHALL MINIMIZE INTERRUPTION OF UTILITIES TO EXISTING BUILDINGS. SCHEDULE SWITCHING FROM EXISTING ELECTRICAL SERVICE TO NEW ELECTRICAL SERVICE AT LEAST SEVEN DAYS IN ADVANCE WITH BRANCH MANAGER. THE BRANCH MANAGER MAY REQUIRE SERVICE TO BE SWITCHED OUTSIDE OF NORMAL WORKING HOURS TO MINIMIZE INTERRUPTION TO BUSINESS.

9. INSTALL 600 AMP VP CT CABINET AND UTILITY METER ADJACENT TO PADMOUNTED TRANSFORMER. SUPPORT AS REQUIRED ON CONC. PAD.

10. GATE OPERATORS, KEY PADS, DETECTION LOOPS AND OTHER ACCESSORIES TO BE FURNISHED BY GATE MANUFACTURER AND INSTALLED BY ELC. SEE SITE DRAWINGS.

QUESTEC
CONSULTING ENGINEERS

NO.	DESCRIPTION	BY	CHK	APPR	DATE
1	ADDENDUM NO. 1	LDL	CPW	-	9/30/92

REVISIONS

TITLE: SITE ELECTRICAL PLAN

SAFETY-KLEEN CORP.
777 SOUTH FRANCIS ROAD ELGIN, ILLINOIS 60123 PHONE 708-697-8460

SCALE	BY	CHKD	P.E. APPR	CP. APPR	DATE
1" = 20'-0"	DUANE				7-01-92

SERVICE CENTER LOCATION: PEKIN, IL
SC-DWG-REV NO.: MF06-007-0
SHEET NO.: 3

8-1-92 3:00pm MF06007S.DWG

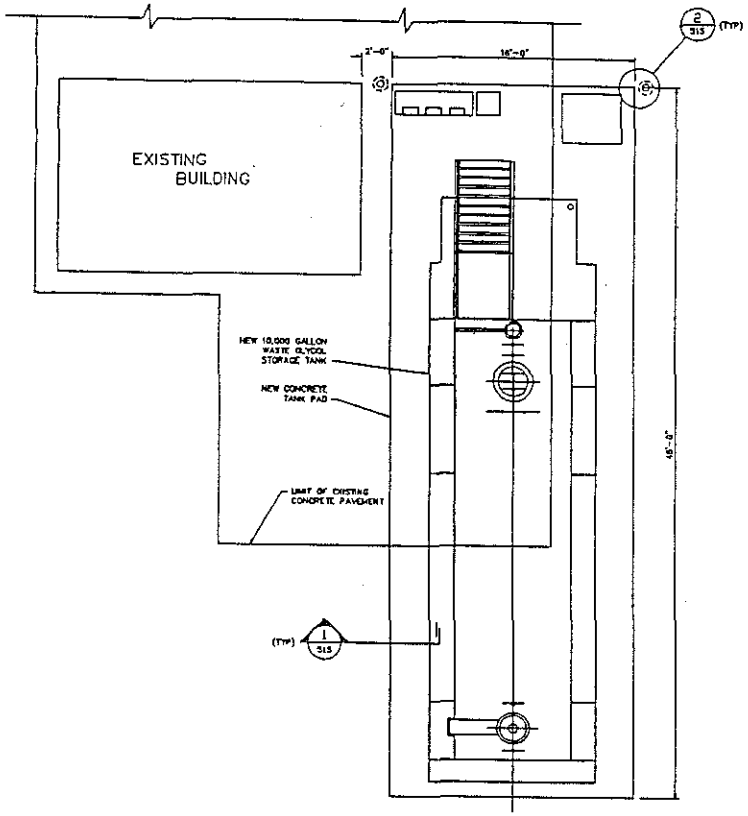

PARTIAL SITE PLAN
SCALE: 1/4" = 1'-0"

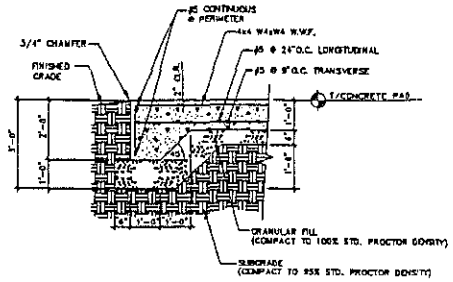

1 / 515 TANK PAD SECTION (TYPICAL)
SCALE: 1/2" = 1'-0"

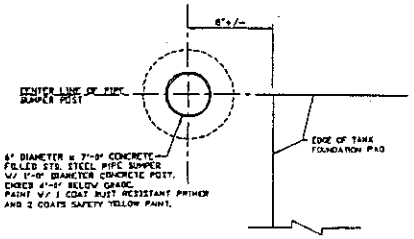

2 / 515 BUMPER POST DETAIL
NO SCALE

GENERAL NOTES

THIS DRAWING CONTAINS INFORMATION PROPRIETARY TO SAFETY-KLEEN CORPORATION. ANY REPRODUCTION, DISCLOSURE OR USE OF THIS DRAWING IS EXPRESSLY PROHIBITED EXCEPT BY SAFETY-KLEEN OR AS SAFETY-KLEEN MAY AGREE IN WRITING.

1. SAWCUT AND PATCH EXISTING CONCRETE PAVEMENT AS REQUIRED TO EXCAVATE AND INSTALL NEW CONCRETE PAD. USE 3/4" EXPANSION JOINT FILLER MATERIAL WITH APPROPRIATE BACKER ROD AND SEALANT. INSTALL JOINT BETWEEN NEW AND EXISTING CONCRETE SIMILAR TO DET. 8, DWG. 510.
2. CONCRETE PAD SHALL BEAR ON UNDISTURBED SOIL. NOTIFY ENGINEER OF ANY QUESTIONABLE SOIL CONDITIONS. ASSUMED SOIL BEARING PRESSURE=2500PSF.
3. ALL CONCRETE WORK SHALL CONFORM TO THE REQUIREMENTS OF ACI 301, 315 AND 318 LATEST EDITIONS. FOLLOW ACI RECOMENDATIONS FOR COLD AND HOT WEATHER CONDITIONS.
4. ALL CONCRETE WORK SHALL BE COVERED WITH BURLAP AND KEPT CONTINUOUSLY MOIST FOR A MINIMUM PERIOD OF FIVE DAYS.
5. MINIMUM CONCRETE COVER FOR REINFORCEMENT SHALL BE 3" FOR CONCRETE CAST AGAINST SOIL AND 2" FOR CONCRETE EXPOSED TO WEATHER.
6. ALL CONCRETE SHALL HAVE MINIMUM COMPRESSIVE STRENGTH = 4000 P.S.I. AT 28 DAYS WITH MAX. SIZE AGGREGATE = 1 1/2" AND ENTRAINED AIR = 4-6%.
7. ALL REBAR SHALL BE GRADE 60 BILLET STEEL CONFORMING TO ASTM A-615.
8. TOP OF NEW CONCRETE PAD ELEVATION TO MATCH TOP OF EXISTING CONCRETE PAVEMENT ELEVATION AT NORTHEAST CORNER OF EXISTING RTN/FILL BUILDING.

QUESTEC CONSULTING ENGINEERS

TITLE
HORIZONTAL TANK PAD
PARTIAL SITE PLAN
AND DETAILS

SAFETY-KLEEN CORP.

NO.	DESCRIPTION	BY	CHK	APPR	DATE
1	ADDENDUM NO. 1	VJG	GPH	-	07/7/92

REVISIONS

SCALE	BY	CHKD	P.E. APPR	CP. APPR	DATE
1/4" = 1'-0"	Questec				07-1-92

SERVICE CENTER LOCATION	SC-DWG-REV NO.	SHEET NO.
PEKIN, IL	MF06-515-0	54

8-1-92 3:00pm 5150.DWG

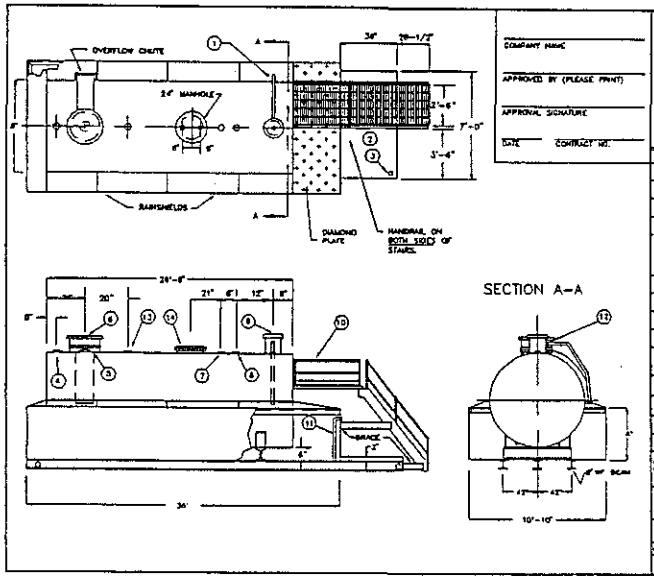

COMPANY NAME

APPROVED BY (PLEASE PRINT)

APPROVAL SIGNATURE

DATE CONTRACT NO.

NOTES :

1. SHELL: 1/4", HEAD: 5/16" CONTAINMENT: 1/4"
2. MATERIAL - MILD CARBON STEEL.
3. TEST - 9 PSIG
4. ENTIRE UNIT UL LISTED, NOT JUST PRIMARY TANK.
5. PAINT - RED PRIMER (STANDARD).
6. FOR FURTHER INFORMATION CALL 1-800-242-2739 OR FAX (516) 366-0903

ITEM #	DESCRIPTION
1	1" FILL BOX OVERFLOW PIPE
2	PUMP PLATFORM W/2" LIP
3	1/2" DRAIN FITTING
4	3" VENT FITTING
5	8" - 6 oz EMERGENCY VENT - SHIPPED LOOSE.
6	VENT DEFLECTOR ASSEMBLY SHIPPED LOOSE
7	3" FCPLC
8	3" FITTING
9	OVERFILL CONTAINMENT CHAMBER WITH 4" FILL FITTING
10	STAIRS, PLATFORM AND HANDRAIL - DESIGNED TO OSHA REQUIREMENTS SHIPPED LOOSE
11	3/4" PUMPOUT PIPE W/ 3" PIPE CAP SUMP
12	1" PIPE UNION
13	4" FITTING
14	(3) 3" FITTING

All rights reserved. This drawing or any part thereof must not be reproduced in any form without the written permission of Aero-Power Unlimited Tanks, Inc.

AREO-POWER®

TITLE: 10,000 GAL. FUELER

SCALE	DATE	DRAWN BY	DWG NO.
NONE	5/12/91	AP	UL10106

GENERAL NOTES

THIS DRAWING CONTAINS INFORMATION PROPRIETARY TO SAFETY-KLEEN CORPORATION. ANY REPRODUCTION, DISCLOSURE OR USE OF THIS DRAWING IS EXPRESSLY PROHIBITED EXCEPT BY SAFETY-KLEEN OR AS SAFETY-KLEEN MAY AGREE IN WRITING.

1. THIS DRAWING IS ISSUED FOR REFERENCE PURPOSES ONLY.
2. ROOF MANWAY - 24" DIAMETER MANHOLE W/GASKET CEMENTED TO LID ONLY. INSTALL USING 12 - 1/2" x4" LONG SHOULDER BOLTS. EVERY OTHER BOLT HOLE W/BOLTS THREADED TO NUT DEPTH ONLY. NO OTHER BOLTS TO BE USED. PLACE LABEL ON LID AS INDICATED
3. PROVIDE 24 SHORT BOLTS FOR MANWAY, TO BE USED DURING TANK PIPE PRESSURE TESTING. (SEE SPECS)
4. TANK IS PROVIDED BY SAFETY-KLEEN & INSTALLED BY CONTRACTOR.
5. TANK AND STEEL SUPPORTS TO BE PAINTED PER SPECIFICATIONS.

QUESTEC CONSULTING ENGINEERS

TITLE: 10,000 GALLON HORIZONTAL STORAGE TANK

SAFETY-KLEEN CORP.

NO.	DESCRIPTION	BY	CHK	APPR	DATE
1	ADDENDUM NO. 1	V.G	GPH	-	8/23/92

REVISIONS

SCALE	BY	CHKD	P.E. APPR	OP. APPR	DATE
AS SHOWN	Questec				7-1-92

SERVICE CENTER LOCATION	SC-DWG-REV NO.	SHEET NO.
PEKIN, IL	MF06-101-0	55

9-1-92 5:00pm 1010.DWG

MARK	PART DESCRIPTION	MANUFACTURER MODEL NUMBER	REMARKS
1	3" FLANGED CAMLOCK COUPLING WITH CAP AND CHAIN		
2	3" CAST STEEL BALL VALVE		FURNISH WITH LOCKABLE HANDLE
3	3" 150# CAST STEEL SWING CHECK VALVE		
4	TANK LEVEL GAUGE		SEE DETAILS, DWG. 242
5	3" NORMAL VENT		SP# 2oz. PRESSURE, 1oz. VACUUM

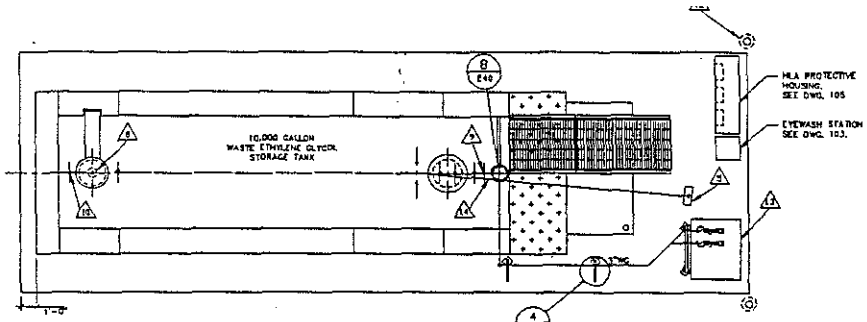

PIPING PLAN
SCALE: 1/4" = 1'-0"

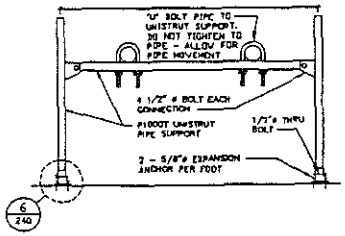

5/240 PIPE SUPPORT DETAIL TYPICAL
SCALE: 3/4" = 1'-0"

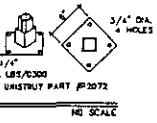

6/240 DETAIL
NO SCALE

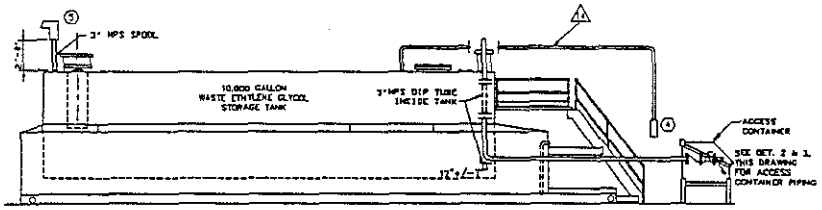

9/240 WASTE GLYCOL PIPING - ELEVATION
SCALE: 1/4" = 1'-0"

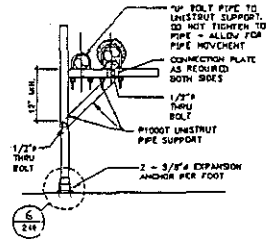

4/240 PIPE SUPPORT DETAIL TYPICAL
SCALE: 3/4" = 1'-0"

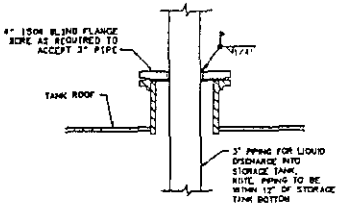

8/240 TANK DOME PIPING PENETRATION DETAIL
SCALE: NONE

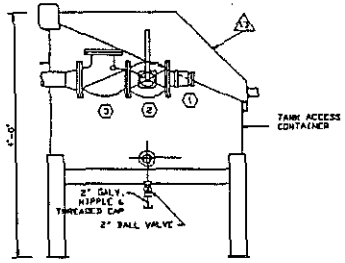

2/240 ACCESS CONTAINER DETAIL - ELEVATION
SCALE: NONE

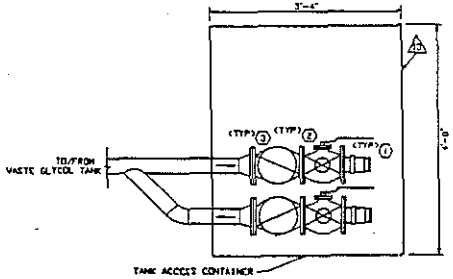

3/240 ACCESS CONTAINER PIPING DETAIL - PLAN
SCALE: NONE

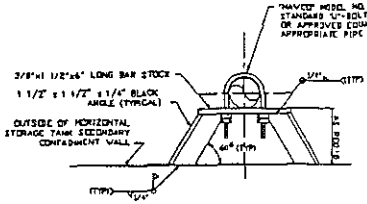

7/240 TANK PIPE SUPPORT DETAIL
SCALE: NONE

GENERAL NOTES

THIS DRAWING CONTAINS INFORMATION PROPRIETARY TO SAFETY-KLEEN CORPORATION. ANY REPRODUCTION, DISCLOSURE OR USE OF THIS DRAWING IS EXPRESSLY PROHIBITED EXCEPT BY SAFETY-KLEEN OR AS SAFETY-KLEEN MAY AGREE IN WRITING.

1. SEE DWG. 101 FOR STORAGE TANK DETAILS.
2. ALL PIPING SHALL BE ASTM A53, G.B. MINIMUM.
3. ALL CHANGES IN PIPING DIRECTION SHALL BE MADE USING 2 x 3 ELBOWS OR LONG RADIUS BOW.
4. ALL PROCESS PIPING CONNECTIONS OUTSIDE CONTAINMENT SHALL BE WELDED.
5. TANK LEVEL GAUGE. SEE DWG. 242.
6. FIELD WELD PIPE SUPPORT TO TANK AS REQUIRED. SEE DET. 7, THIS DWG.
7. SUPPORT PIPING AS SHOWN, BUT NOT MORE THAN 8'-0" O.C. UNLESS OTHERWISE NOTED.
8. INSTALL EMERGENCY VENT FURNISHED WITH TANK.
9. INSTALL OWNER FURNISHED HIGH LEVEL ALARM PROBE.
10. INSTALL NORMAL TANK VENT.
11. PAINT PIPING PER SPECIFICATIONS.
12. TYPICAL BUMPER POST. SEE DET. 2, DWG. 515.
13. INSTALL OWNER FURNISHED ACCESS CONTAINER.
14. INSTALL LEVEL GAUGE PIPING PLUMB AND LEVEL.

QUESTEC

TITLE

TANK FARM PIPING PLAN AND DETAILS

SAFETY-KLEEN CORP.

REV. NO.	DESCRIPTION	BY	CHK	APPR	DATE
1	ASSEMBLY NO. 1	VJG	CPH	-	1/31/92

REVISIONS

SCALE	BY	CHKD	P.E. APPR	OP. APPR	DATE
1/4" = 1'-0"	QUESTEC				1-1-92

SERVICE CENTER LOCATION: PEKIN, IL

SE-DWG-REV NO.: MF06-240-0

SHEET NO.: 59

9-1-92 5:00pm 1400 DWG

A-0

EQUIPMENT SCHEDULE
VAREC AUTOMATIC TANK GAUGE
2500 SERIES

MARK	PART DESCRIPTION	REMARKS
1	GAUGE HEAD, IRON HOUSING AND SHEAVES, 304 S.S. TRIM	
2	GAUGE TAPE, 316 STAINLESS STEEL	
3	TOP GUIDE WIRE ANCHOR, STEEL HOUSING & SPRING ROD, CAD PLATE STEEL SPRING	SEE DETAIL 4
4	GAUGE FLOAT, 316 S.S. HOLLOW SHELL WELDED	
5	TAPE FASTENER, 316 STAINLESS STEEL	
6	BOTTOM GUIDE WIRE ANCHOR, STEEL	SEE DETAIL 2
7	SHEAVE ELBOW, IRON HOUSING, 316 S.S. TRIM, TEFLON BEARING	
8	GUIDE WIRE, 316 STAINLESS STEEL	

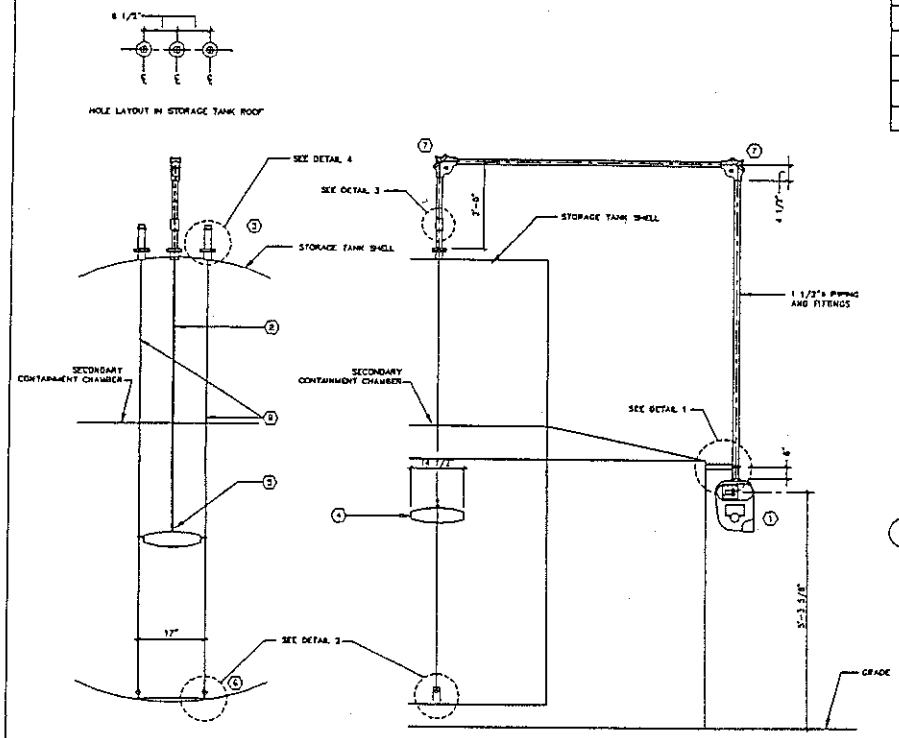

HORIZONTAL STORAGE TANK GAUGE INSTALLATION DETAILS
SCALE: NONE

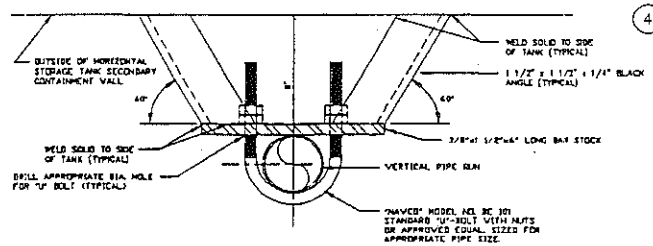

1 VERTICAL PIPE SUPPORT DETAIL
SCALE: NONE
*NOTE: SIMILAR DETAIL TO BE USED FOR SUPPORTING PIPE RUNS ACROSS TANK TOPS.
*NOTE: PAINT "U"-BOLT & NUTS, BARSTOCK, & ANGLES PER TANK PAINTING SPECS.

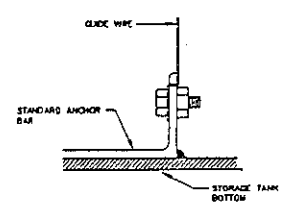

2 BOTTOM GUIDE WIRE ANCHOR DETAIL
SCALE: NONE

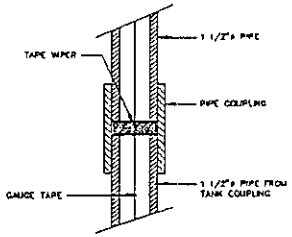

3 TAPE WIPER DETAIL
SCALE: NONE

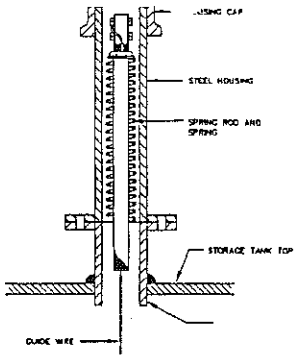

4 TOP GUIDE WIRE ANCHOR DETAIL
SCALE: NONE

GENERAL NOTES

THIS DRAWING CONTAINS INFORMATION PROPRIETARY TO SAFETY-KLEEN CORPORATION. ANY REPRODUCTION, DISCLOSURE OR USE OF THIS DRAWING IS EXPRESSLY PROHIBITED EXCEPT BY SAFETY-KLEEN OR AS SAFETY-KLEEN MAY AGREE IN WRITING.

1. SEE DWG. 240 FOR ACTUAL LEVEL GAUGE LOCATIONS.
2. SUPPORT PIPING 8'-0" O.C. MAXIMUM. PAINT ALL EXPOSED STEEL PER SPECIFICATIONS.

QUESTEC

NO.	DESCRIPTION	BY	CHK	APPR	DATE
1	ADDENDUM NO. 1	VJG	GPH	–	6/23/92

REVISIONS

TITLE
VAREC GAUGE DETAILS FOR HORIZONTAL TANK

SAFETY-KLEEN CORP.

SCALE	BY	CHKD	P.E. APPR	OP. APPR	DATE
AS SHOWN	DuesTec				7-1-92

SERVICE CENTER LOCATION	SC-DWG-REV NO.	SHEET NO.
PEKIN, IL	MF06-242-0	60

8-1-92 5:00pm 2420.DWG

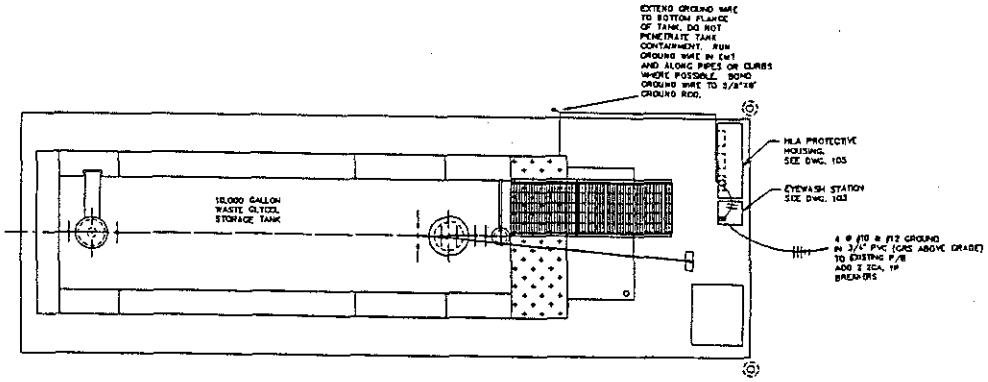

WIRING PLAN

SCALE: 1/4" = 1'-0"

GENERAL NOTES

THIS DRAWING CONTAINS INFORMATION PROPRIETARY TO SAFETY-KLEEN CORPORATION. ANY REPRODUCTION, DISCLOSURE OR USE OF THIS DRAWING IS EXPRESSLY PROHIBITED EXCEPT BY SAFETY-KLEEN OR AS SAFETY-KLEEN MAY AGREE IN WRITING.

1. INSTALL BONDING STRAP FROM GROUND ROD TO ELECTRICAL CONDUIT IN ACCORDANCE WITH NEC 250-46.
2. SEE DWG. 007 FOR SITE ELECTRICAL DETAILS.
3. POWER WIRING SHALL BE GASOLINE AND OIL RESISTANT THWN COPPER.
4. SEE DWG 240 FOR MLA SYSTEM SENSOR LOCATIONS.

WESTEC CONSULTING ENGINEERS

TITLE: TANK FARM ELECTRICAL PLANS

SAFETY-KLEEN CORP.

NO.	DESCRIPTION	BY	CHK	APPR	DATE
1	ADDENDUM NO. 1	LCL	GPR	-	1/27/94

REVISIONS

SCALE	BY	CHKD	P.E. APPR	OP. APPR	DATE
AS SHOWN					7-1-93

SERVICE CENTER LOCATION: PEKIN, IL

SC-DWG-REV NO.: WF06-460-0

SHEET NO.: 61

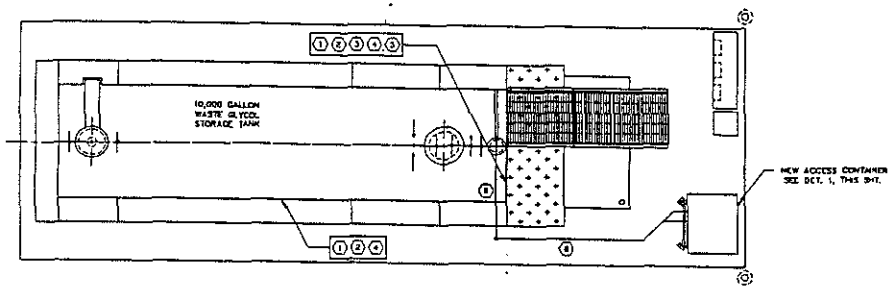

SIGN LOCATION PLAN

SCALE: 1/4" = 1'-0"

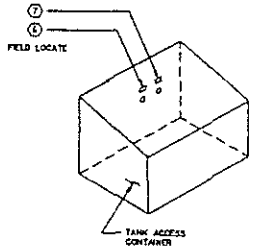

1 ACCESS CONTAINER DETAIL

NO SCALE

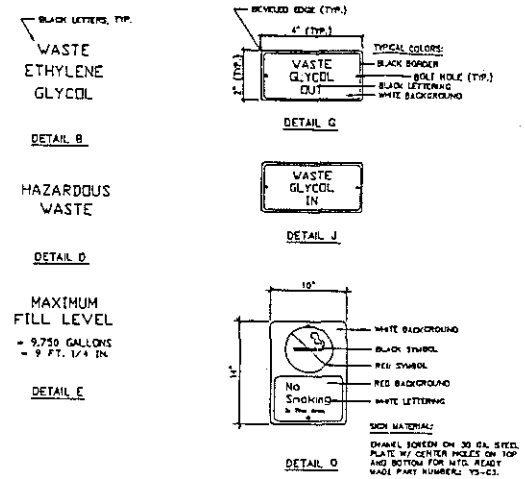

MARK NO.	DESCRIPTION	DETAIL	NUMBER REQUIRED	REMARKS/ HAT'L.
1	WASTE ETHYLENE GLYCOL	B	2/ WASTE GLYCOL TANK	NOTE 4, THIS DWG.
2	NFPA DESCRIPTION	---	2/ TANK	NOTE 1, THIS DWG.
3	NO SMOKING	O	AS SHOWN	
4	HAZARDOUS WASTE	D	2/ WASTE SOLVENT TANK	NOTE 1, THIS DWG.
5	TANK CAPACITY	E	1/ TANK	NOTE 4, THIS DWG.
6	WASTE GLY. OUT	G	1/ ACCESS CONTAINER	NOTE 3, THIS DWG.
7	WASTE GLY. IN	J	1/ ACCESS CONTAINER	NOTE 3, THIS DWG.
8	WASTE GLYCOL		2	NOTE 6, THIS DWG.

GENERAL NOTES

THIS DRAWING CONTAINS INFORMATION PROPRIETARY TO SAFETY-KLEEN CORPORATION. ANY REPRODUCTION, DISCLOSURE OR USE OF THIS DRAWING IS EXPRESSLY PROHIBITED EXCEPT BY SAFETY-KLEEN OR AS SAFETY-KLEEN MAY AGREE IN WRITING.

1. - WASTE ETHYLENE GLYCOL

   SIGNAGE MUST COMPLY WITH NFPA 704H.

2. CONTRACTOR TO VERIFY ALL QUANTITIES REQUIRED.
3. LABEL PIPING PER SPECIFICATIONS.
4. TANK SIGNAGE:

   CONTRACTOR TO STENCIL TANKS AS SHOWN. LETTERS SHALL BE BLOCK TYPE AND HORIZONTAL AS SHOWN.
5. TANK ACCESS CONTAINER PIPING I.D. SIGN MATERIAL:

   RIGID 1/8" PLASTIC MATERIAL WHICH RESISTS STAINS AND IS EASY TO CLEAN. PROVIDE CUSTOM ENGRAVED IDENTIFICATION. FASTEN WITH GALVANIZED BOLTS AND NUTS AS SHOWN.
6. PIPE MARKERS SHALL COMPLY WITH ANSI A13.1. MARKERS SHALL BE A MINIMUM OF 1 1/8"x 7", WITH 1" TALL LETTERS. USE STANDARD PRODUCTS OF THE KWIK-KOL OR SETON NAME PLATE CO.
7. INSTALL ALL SIGNAGE AFTER FINAL PAINTING OF TANK AND PIPING.

QUESTEC

TITLE

TANK FARM
SIGN LOCATION
AND DETAILS

SAFETY-KLEEN CORP.

NO.	DESCRIPTION	BY	CHK	APPR	DATE
1	ADDENDUM NO. 1	WJG	CPW	-	12/27/92

REVISIONS

SCALE	BY	CHKD	P.E. APPR	OP. APPR	DATE
1/4" = 1'-0"	QuesTec				7-29-92

SERVICE CENTER LOCATION	SC-DWG-REV NO.	SHEET NO.
PEKIN, IL	MF06-915-0	62

8-1-92 5:00pm 0150.DWG

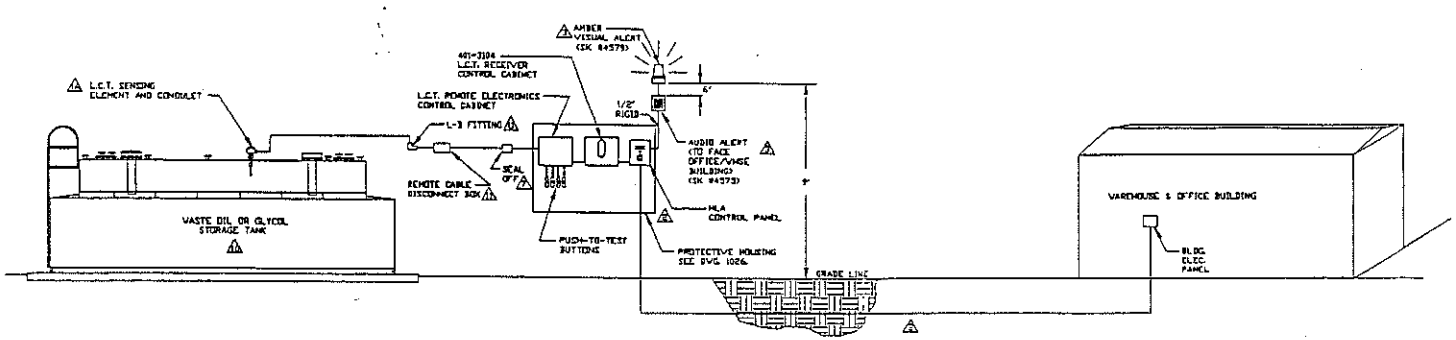

HIGH LEVEL ALARM SYSTEM DIAGRAM

SCALE: NONE

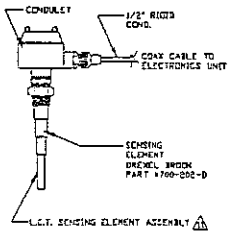

L.C.T. SENSING ELEMENT AND CONDULET DETAIL

SCALE: NONE

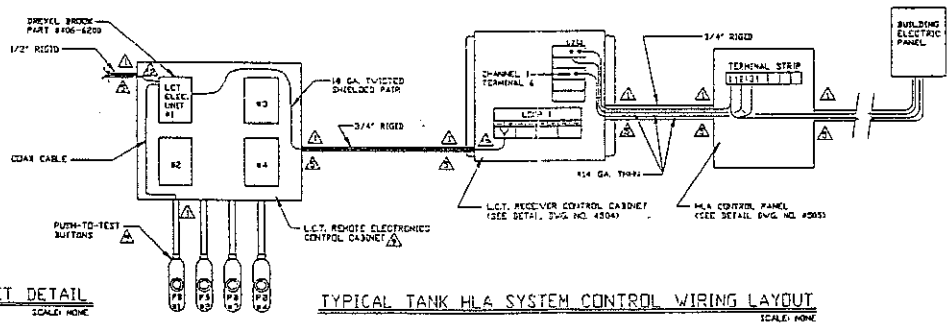

TYPICAL TANK HLA SYSTEM CONTROL WIRING LAYOUT

SCALE: NONE

THIS DRAWING REPRESENTS TYPICAL SAFETY-KLEEN CONSTRUCTION PRACTICES

GENERAL NOTES

THIS DRAWING CONTAINS INFORMATION PROPRIETARY TO SAFETY-KLEEN CORPORATION. ANY REPRODUCTION, DISCLOSURE OR USE OF THIS DRAWING IS EXPRESSLY PROHIBITED EXCEPT BY SAFETY-KLEEN OR AS SAFETY-KLEEN MAY AGREE IN WRITING.

1. USE MEYER'S HUB'S AT ALL CONDUIT ENTRIES INTO ELECTRICAL BOXES.
2. SEE SITE UTILITY PLAN FOR WIRE & CONDUIT SIZE AND SPECIFIC EQUIPMENT MOUNTING.
3. SUPPLIED BY S-K.
4. L.C.T. = LEVEL CONTROL TRANSMITTER
5. CONDUIT PENETRATION TO BE IN SIDE OF ENCLOSURE APPROX. WHERE SHOWN.
6. ELECTRIC CONTRACTOR SHALL INSTALL CONDUCTORS IN CONTROL PANELS IN A NEAT & ORDERLY FASHION. THIS INCLUDES USING TIE WRAPS & TAGGING CONDUCTORS.
7. INSTALL SEALING FITTING 12" FROM L.C.T. REMOTE ELECTRONICS CONTROL CABINET.
8. CONTRACTOR IS NOT TO USE WIRE PULLING STRAP FROM L.C.T. REMOTE ELECTRONICS CONTROL CABINET TO L.C.T. SENSING ELEMENT AND CONDULET.
9. SEE DETAIL DWG. 4503.
10. FOR SOLVENT TANK SEE "SOLVENT TANK HLA SYSTEM DIAGRAM", DWG. NO. 4500.
11. SEE DWG. 4502 FOR INSTALLATION PROCEDURE.
12. HLA LOW VOLTAGE OPERATING REQUIREMENTS:
    A. POWER REQUIREMENT 13 TO 28 VDC.
    B. OUTPUT 4 - 13 mA (ALARM STATE)
       13 - 25 mA (NORMAL STATE)
    C. OPERATING TEMP. -40°F TO +140°F
    D. SHIELD-TO-GROUND LOADING 25 ohm MIN RESISTANCE
    E. NET EFFECT: LESS THAN 2 dF SHIFT IN OPERATING POINT FOR UNIT IN EXPLOSION-PROOF HOUSING FROM 3 V FIELD, 8 FT. 150 OR 450 MHZ AT A DISTANCE OF 3 FT. FROM EXPOSED CABLE OF SIGNAL WIRE.
    F. FAIL-SAFE: SWITCHABLE FROM EITHER LOW-LEVEL FAIL-SAFE (LLFS) OR HIGH-LEVEL FAIL-SAFE (HLFS).
13. IF INDIVIDUAL SERVICE CENTER CONDITIONS ARE NOT COVERED BY DETAILS SHOWN HERE CONTACT ENGINEER OR S-K TECHNICAL SERVICES.
14. WRAP ALL RIGID CONDUIT THREADS WITH TEFLON TAPE.
15. ALL ELECTRICAL WITHIN 10 FT. OF TANK TO BE CLASS I, DIV. 2, PER LOCAL CODE. SEE SITE UTILITY PLAN FOR ADDITIONAL SPECIFICATIONS.
16. DO NOT INSTALL L.C.T. SENSING ELEMENT IN TANK COUPLING IN CENTER OF TANK.

NO.	DESCRIPTION	BY	CHK	APPR	DATE
	REVISIONS				

TITLE

ANTIFREEZE/OIL TANK HLA SYSTEM DIAGRAM

SAFETY-KLEEN CORP.

SCALE	BY	CHKD	P.E. APPR	OP. APPR	DATE
AS SHOWN	Quintec	-	-	-	12-1-96

SERVICE CENTER LOCATION: PEKIN, IL

SC-DWG-REV NO.: 513601-4501-00

SHEET NO.

4-7-93

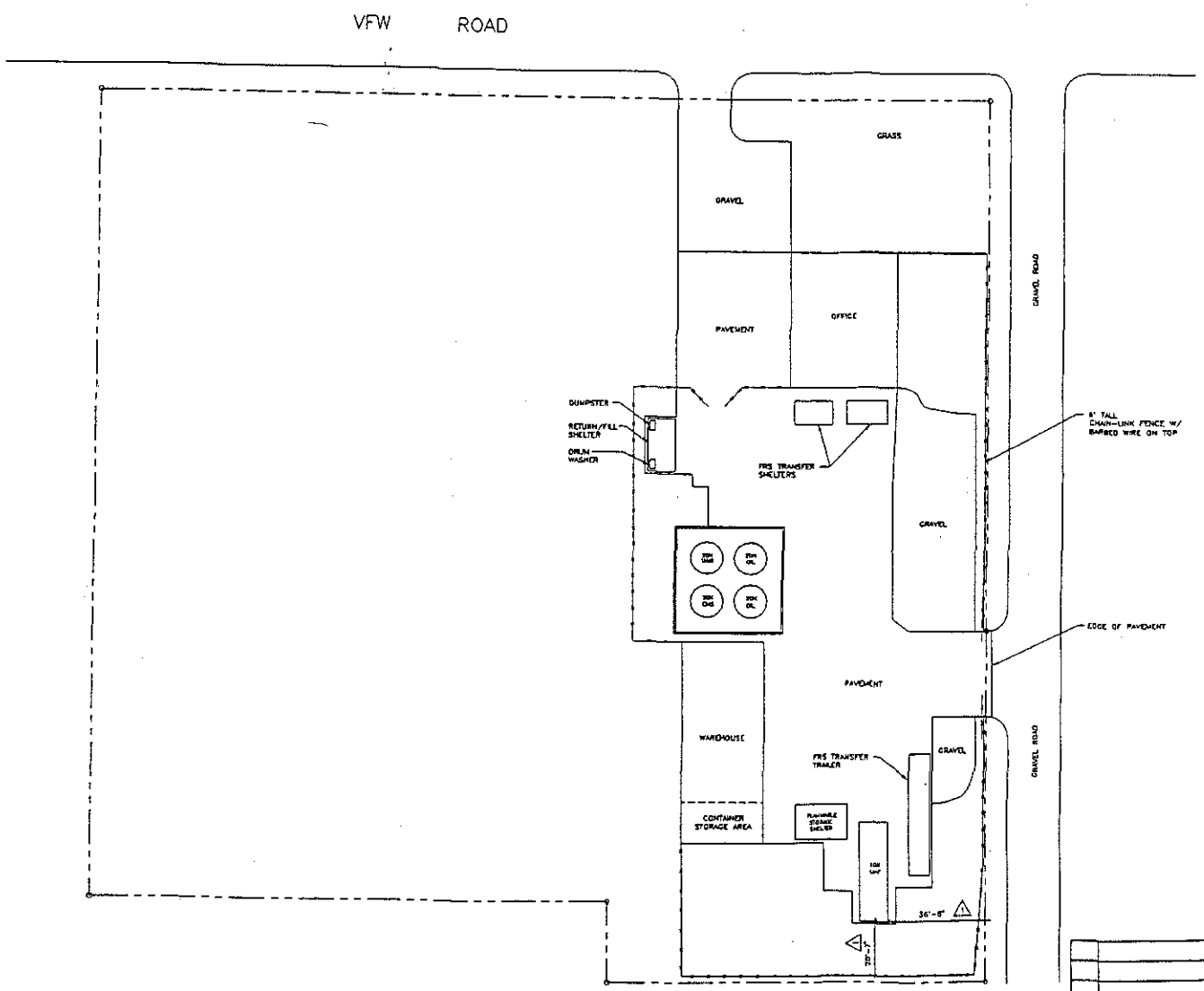

SITE PLAN

0 10 20 40 60

GENERAL NOTES

1. FIELD MEASUREMENT AS TAKEN BY CHRIS MOSBY ON 3-11-93.

PROPRIETARY STATEMENT

THIS DRAWING IS THE EXCLUSIVE PROPERTY OF SAFETY-KLEEN CORP. AND IS PROPRIETARY AND CONFIDENTIAL INFORMATION. THIS DRAWING AND THE INFORMATION CONTAINED THEREIN MUST NOT BE DUPLICATED, USED, DIVULGED, REPRODUCED, COPIED, DISCLOSED OR APPROPRIATED IN WHOLE OR IN PART FOR ANY PURPOSE OTHER THAN AS EXPRESSLY AUTHORIZED BY SAFETY-KLEEN CORP. THIS DRAWING MUST BE RETURNED PROMPTLY UPON REQUEST.

QUESTEC CONSULTING ENGINEERS

NO.	DESCRIPTION	BY	CHK	APPR	DATE
	REVISIONS				

TITLE: SITE PLAN WITH FIELD MEASUREMENTS

SAFETY-KLEEN CORP.

SCALE	BY	CHKD	APPROVED	OPERATIONS	DATE
1" = 20'-0"	P.D.	-	-	-	10/3/91

SERVICE CENTER LOCATION	SC-DWG. NO.-REV. NO.	SHEET NO.
PEKIN, IL.	513601	

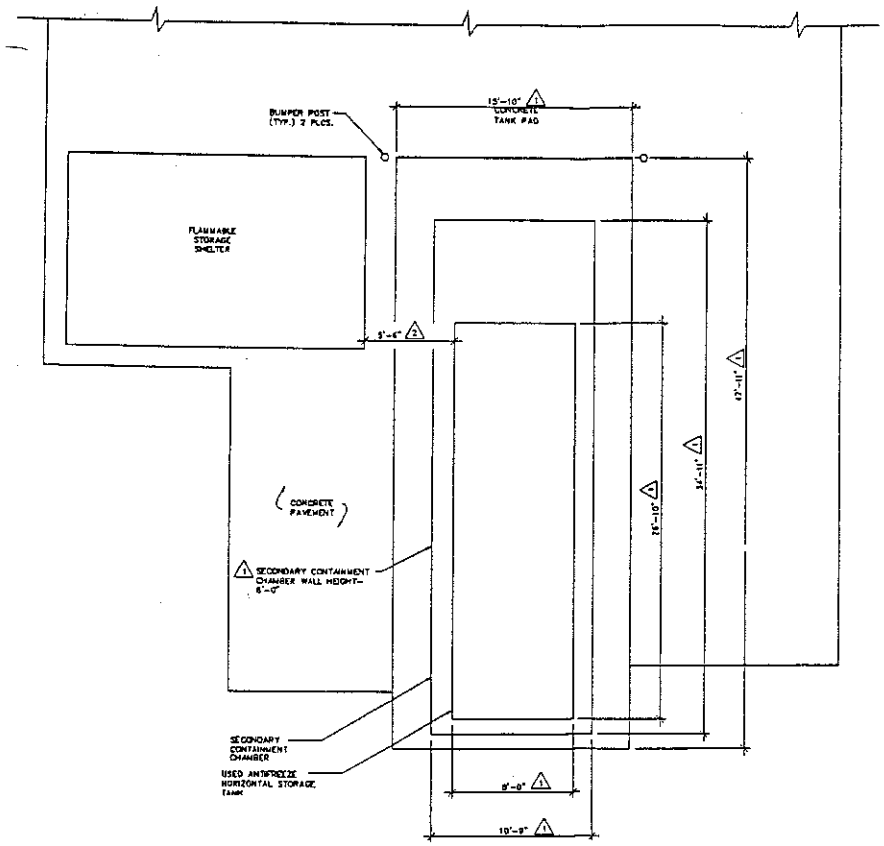

PARTIAL SITE PLAN

0 2 4 8 12

GENERAL NOTES

1. FIELD MEASUREMENTS AS TAKEN BY CHRIS MOSBY ON 3-11-93.
2. FIELD MEASUREMENTS AS TAKEN BY ON-SITE PERSONNEL ON 4-14-93.

PROPRIETARY STATEMENT

THIS DRAWING IS THE EXCLUSIVE PROPERTY OF SAFETY-KLEEN CORP. AND IS PROPRIETARY AND CONFIDENTIAL INFORMATION. THIS DRAWING AND THE INFORMATION CONTAINED THEREIN MUST NOT BE DUPLICATED, USED, DIVULGED, REPRODUCED, COPIED, DISCLOSED OR APPROPRIATED IN WHOLE OR IN PART FOR ANY PURPOSE OTHER THAN AS EXPRESSLY AUTHORIZED BY SAFETY-KLEEN CORP. THIS DRAWING MUST BE RETURNED PROMPTLY UPON REQUEST.

QUESTEC CONSULTING ENGINEERS

TITLE: USED ANTIFREEZE HORIZONTAL TANK CONCRETE PLAN WITH FIELD MEASUREMENTS

SAFETY-KLEEN CORP.

SCALE	BY	CHKD	APPROVED	OPERATIONS	DATE
AS SHOWN	RJ	CWM			3-31-93

SERVICE CENTER LOCATION	SC-DWG. NO.-REV. NO.	SHEET NO.
PEKIN, IL.	513601	

NO.	DESCRIPTION	BY	CHK	APPR	DATE
	REVISIONS				

4-8-93 F-DATA.DWG 9341.6

TANK INSPECTION RECORD

For Safety-Kleen Corporation
Pekin, Illinois
Horizontal Self Contained Tank
Tank Installed - Spring, 1993
Used Antifreeze

By QuesTec Corporation
Chris Mosby & Bill Gibbs
Project No. 9341.6
Inspection Date: 3\11\93
3\25\93

TYPE: Aboveground, horizontal, cylindrical, self contained - steel
8'-0" Diameter, 26'-10" Length
10,000 Gallon Atmospheric, ambient temperature

LABEL: UL - Aboveground Tank For Flammable Liquids. Not For Use Underground. UL Number not visible.

Mfr: This tank is provided with an integral steel foundation and is intended for stationary installation only.

NFPA Diamond: None. Will be labeled after tank is painted.

Hazardous Waste: None. Will be labeled after tank is painted.

Material Stored: None. Will be labeled after tank is painted.

Max. Fill Level: None. Will be labeled after tank is painted.

CONDITION:
Shell - satisfactory.
Bottom - satisfactory.
Roof - satisfactory.
Welded Joints - satisfactory.
Nozzles - satisfactory.

SIGNS OF LEAKAGE: None

SIGNS OF CORROSION:
Shell - satisfactory.
Bottom - satisfactory.
Roof - satisfactory.
Welded Joints - satisfactory.
Nozzles - satisfactory.

SUPPORT TYPE: 3 saddles with a minimum height of 6"

NORMAL VENT: Morrison Brothers #548 - 3"

EMERGENCY VENT: Morrison Brothers Figure No. 244 with venting capacity of 465,000 CFH at 2 1/2 PSI.

TANK CONNECTIONS: None below liquid level.

TANK WALL THICKNESS: Satisfactory. See UT test results.

ANCHORS: None.

MINIMUM TANK SPACING SHELL-TO-SHELL: Not applicable, there are no other tanks in this area.

TANK GAUGE: Varec

TANK HLA: Drexel Brook

LOCATION WITH RESPECT TO PROPERTY LINES, PUBLIC WAYS AND IMPORTANT BUILDINGS ON THE SAME PROPERTY: Over 20' to nearest property line, over 5' to nearest important building.

PIPING INSPECTION RECORD

For Safety-Kleen Corporation
Pekin, Illinois
Horizontal Self Contained Tank
Installed - Spring, 1993
Used Antifreeze

By QuesTec Corporation
Chris Mosby & Bill Gibbs
Project No. 9341.6
Inspection Date: 3\11\93
3\25\93

PIPE PAINT CONDITION: Primer Satisfactory. The intermediate and finish coats will be applied when the weather permits.

SIGNS OF LEAKAGE: None

PIPE WALL THICKNESS: Exceeds minimum requirements. See UT test results.

JOINTS: All pipe joints were either threaded, welded or flanged.

FITTINGS: All fittings are as specified in the design drawings or equal.

VALVES: All valves are as specified in the design drawings or equal.

FLANGES: All flanges are as specified in the design drawings or equal.

PIPE SUPPORTS: Pipe supports are located at a maximum spacing of 10'-0".

PIPE PROTECTION: All piping is protected from physical damage by 8" diameter concrete filled steel bumper posts.

CONNECTION POINT LABELS: "Waste Glycol In" and "Waste Glycol Out"

FILLING & EMPTYING CONNECTIONS FOR CLASS I, CLASS II, and CLASS IIIA LIQUIDS:

The following requirements are met, but not required since the liquid being stored are Class IIIB.

a. Located outside of buildings: yes
b. Minimum of 5 feet from any building opening: yes
c. Closed liquid tight when not in use: yes

CONTAINMENT INSPECTION RECORD

For Safety-Kleen Corporation
Pekin, Illinois
Horizontal Self Contained Tank
Installed - Spring, 1993
Used Antifreeze

By QuesTec Corporation
Chris Mosby & Bill Gibbs
Project No. 9341.6
Inspection Date: 3\11\93
3\25\93

DESCRIPTION: Steel rectangular vault, enclosing the lower half of the tank.

DIMENSIONS: 34'-11" x 10'-9" with 15/64" thick steel walls and 1/4" thick steel bottom.

WALL HEIGHT: NE 4'-2 1/4" NW 4'-2" SE 4'-2 1/4" SW 4'-2 1/4"

CONTAINMENT LINER: Primer painted steel. Intermediate and finish coats to be applied when weather permits.

WALL CONDITION: Primer painted steel. Intermediate and finish coats to be applied when weather permits.

FLOOR CONDITION: Primer painted steel. Intermediate and finish coats to be applied when weather permits.

FOUNDATION CONDITION: No visible deficiencies.

LIQUID REMOVAL METHOD: Remove liquids that accumulate in sump with a hand pump or vacuum truck.

SIGNS OF LEAKAGE: None

SUMP: size: 3" diameter sump
leaks: No visible leaks
blind or capped pipe: blind

COMBUSTIBLE MATERIALS STORED IN CONTAINMENT STRUCTURE: None

PIPING OUTSIDE CONTAINMENT: All piping located outside of containment is welded.

SIGNS OF SOIL EROSION: None

MINIMUM OF 10 FEET FROM OUTSIDE BASE OF THE DIKE AT GROUND LEVEL TO ANY PROPERTY LINE: Yes

B-7

SITE: SAFETY-KLEEN
PEKIN, IL.

DATE: 3-25-93

JOB #: 9341.6

INSPECTOR: WJG

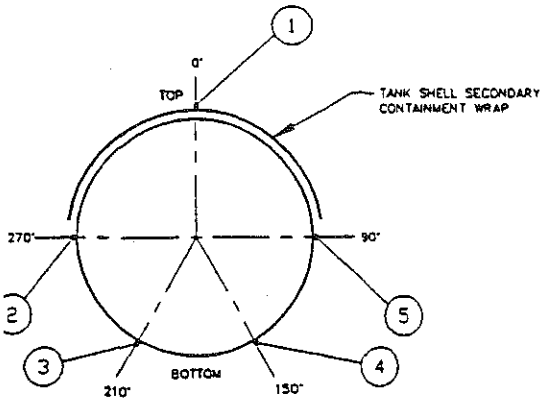

TYPICAL TANK SHELL SECTION
UT TEST LOCATION
(SECTION LOOKING NORTH)

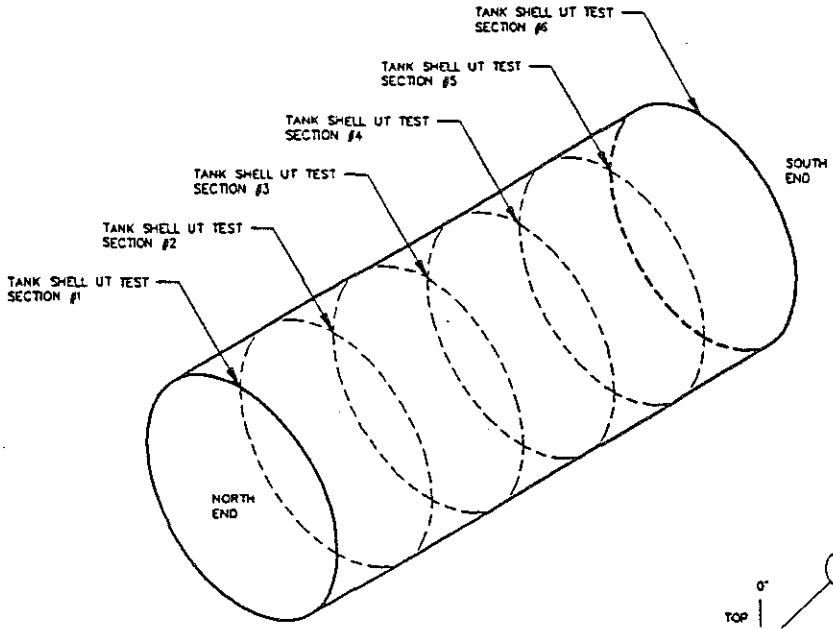

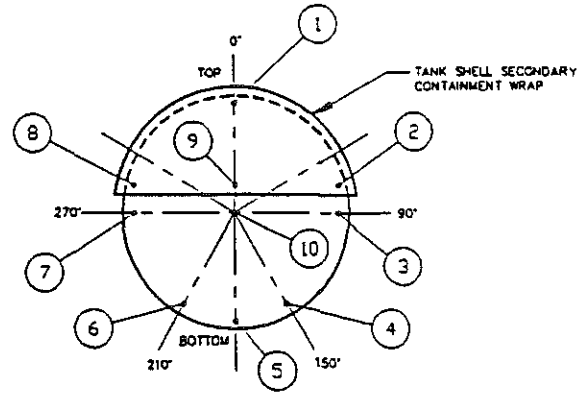

TYPICAL TANK HEAD
UT TEST LOCATION

HORIZONTAL TANK ULTRASONIC THICKNESS TEST

NO SCALE

QUESTEC CORPORATION
CONSULTING ENGINEERS
[illegible]

B-8

SITE: SAFETY-KLEEN
PEKIN, IL.

DATE: 3-25-93

JOB #: 9341.6

INSPECTOR: WJG

TANK HEAD UT THICKNESS TEST			
NORTH		SOUTH	
POINT #	READING	POINT #	READING
1	.249	1	.250
2	.246	2	.248
3	.256	3	.254
4	.255	4	.254
5	.254	5	.253
6	.257	6	.253
7	.255	7	.256
8	.244	8	.248
9	.247	9	.249
10	.256	10	.256

TANK SHELL UT THICKNESS TEST											
SECTION NO.1		SECTION NO.2		SECTION NO.3		SECTION NO.4		SECTION NO.5		SECTION NO.6	
POINT #	READING	POINT #	READING	POINT #	READING	POINT #	READING	POINT #	READING	POINT #	READING
1	.250	1	.259	1	.250	1	.246	1	.253	1	.253
2	.247	2	.246	2	.247	2	.245	2	.250	2	.258
3	.247	3	.245	3	.248	3	.246	3	.257	3	.253
4	.246	4	.246	4	.249	4	.250	4	.255	4	.254
5	.246	5	.248	5	.246	5	.251	5	.255	5	.255

HORIZONTAL TANK ULTRASONIC THICKNESS TEST

NO SCALE

QUESTEC CONSULTING ENGINEERS

B-9

SITE: SAFETY-KLEEN
PEKIN, IL.

DATE: 3-25-93

JOB #: 9341.6

INSPECTOR: WJG

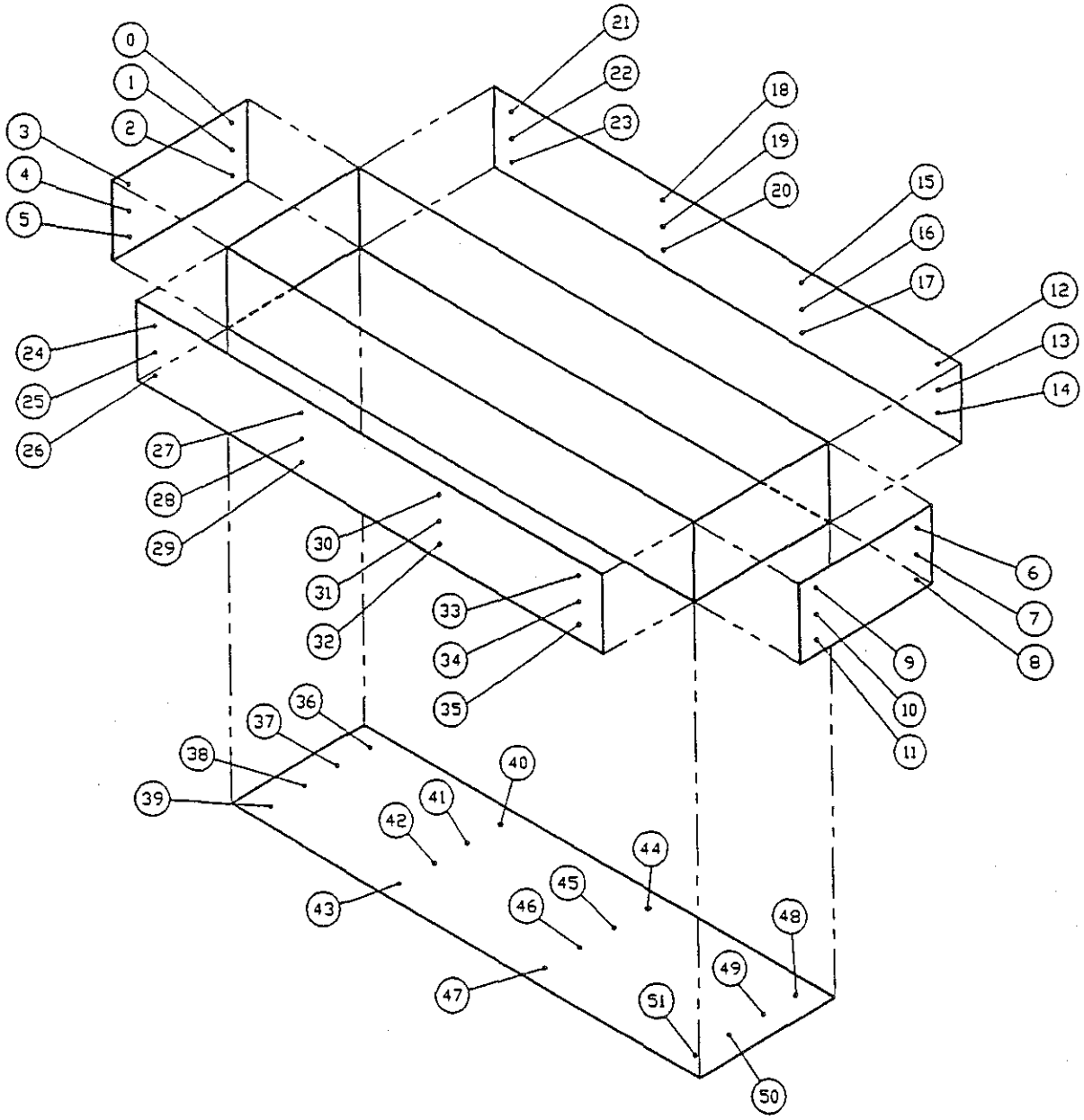

NORTH

SECONDARY CONTAINMENT ULTRASONIC THICKNESS TEST

NO SCALE

QUESTEC CONSULTING ENGINEERS

B-10

SITE: SAFETY-KLEEN
PEKIN, IL.

DATE: 3-25-93

JOB #: 9341.6

INSPECTOR: WJG

SECONDARY CONTAINMENT UT THICKNESS TEST					
POINT #	READING	POINT #	READING	POINT #	READING
0	.233				
1	.235	18	.234	35	.233
2	.234	19	.235	36	.252
3	.235	20	.233	37	.256
4	.236	21	.234	38	.259
5	.235	22	.236	39	.255
6	.237	23	.233	40	.255
7	.239	24	.234	41	.257
8	.234	25	.237	42	.256
9	.234	26	.233	43	.258
10	.236	27	.233	44	.253
11	.233	28	.235	45	.250
12	.234	29	.232	46	.259
13	.235	30	.233	47	.254
14	.233	31	.236	48	.253
15	.233	32	.234	49	.254
16	.236	33	.230	50	.254
17	.234	34	.235	51	.259

SECONDARY CONTAINMENT ULTRASONIC THICKNESS TEST

NO SCALE

QUESTEC CORPORATION
CONSULTING ENGINEERS
4012 Sunset Drive • Columbia • MO 65203 • (314) 875-0250

B-11

SITE: SAFETY-KLEEN
PEKIN, IL.

DATE: 3-25-93

JOB #: 9341.6

INSPECTOR: WJG

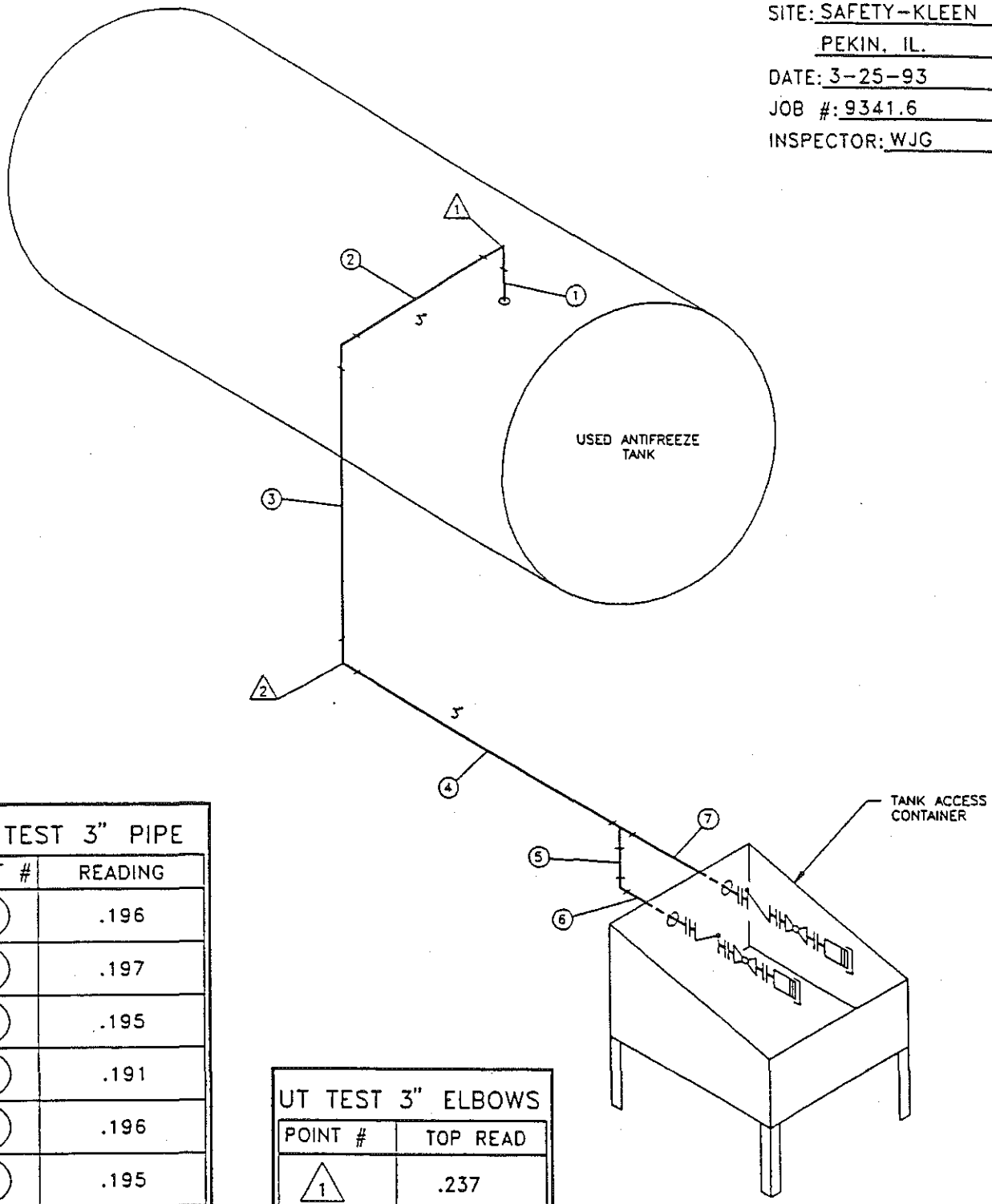

UT TEST 3" PIPE	
POINT #	READING
1	.196
2	.197
3	.195
4	.191
5	.196
6	.195
7	.194

UT TEST 3" ELBOWS	
POINT #	TOP READ
1	.237
2	.221

USED ANTIFREEZE PIPING ISOMETRIC WITH UT TEST LOCATIONS

NO SCALE

QUESTEC CONSULTING ENGINEERS

TANK AND PIPE LEAK TEST REPORT

Test Date: March 12, 1993 Project No: 9341.10

Test Witnessing Agency: QuesTec Corporation, 4812 Santana Circle, Columbia, MO 65203

Testing Agency: Southwest Industrial Constructors, 121 Exposition Street, Denton, TX 76205

Location: Safety-Kleen Pekin, IL, RR #3, Pekin, IL 61554

Test Witness: Calvin Baker

TANK: Waste Antifreeze

	TIME	PRESSURE
START	1:10 pm	4.1 psi
END	1:40 pm	4.1 psi

COMMENTS: Soap and bubble test, no leaks were indicated.

PIPE: From the tank to the access container

	TIME	PRESSURE
START	10:45 am	89.0 psi
END	11:30 am	89.0 psi

COMMENTS: Pipe test procedure is to pneumatically test the pipe at approximately 85 psi for 45 minutes. All joints were checked for leaks with a soapy water solution. Result of the soap test is that no leaks were indicated.

SIGNATURE OF WITNESS

March 12, 1993
DATE

FUESTEC CORPORATION

CONSULTING ENGINEERS
Mechanical • Electrical • Civil • Environmental

4812 SANTANA CIRCLE, COLUMBIA, MO. 65203

Client SAFETY-KLEEN CORP. Pg. 1 B-13

Project No. 9341.6 Date

Project Title PEKIN, IL.

Subject USED ANTIFREEZE TANK INSTALLATION ASSESSMENT

Designer TYJ Cx By SD Prelim Final x

CONDARY CONTAINMENT CALCULATIONS – ABOVEGROUND HORIZONTAL STORAGE TANK

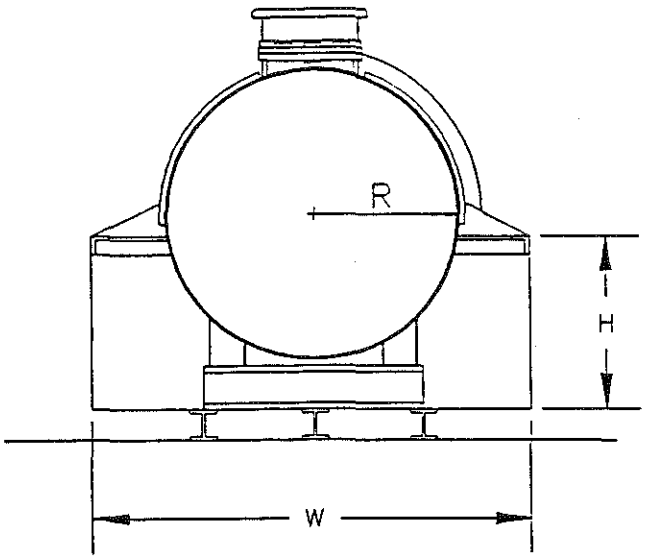

HORIZONTAL STORAGE TANK
SELF-CONTAINED

NO SCALE

NOMINAL 10,000 GALLON TANK
REFERENCE: DRAWING NO. MF06-101-1

TANK DATA

L_1	(secondary containment length)	34.92'
L_2	(tank length)	26.83'
R	(tank radius)	4.00'
W	(secondary containment width)	10.75'
H	(secondary containment height)	4.17'

FORMULAS USED

SECONDARY CONTAINMENT VOLUME = $(W)(H)(L_1)(7.48 gal./cf.)$

MISC. DISPLACEMENT VOLUME (supports, etc.) = 1% OF SECONDARY CONTAINMENT VOLUME

TANK VOLUME = $\pi (R^2)(L_2)(7.48 gal./cf.)$

CALCULATIONS

SECONDARY CONTAINMENT VOLUME = (10.75)(4.17)(34.92)(7.48) = (+) 11,709 GAL.

MISCELLANEOUS DISPLACEMENT VOLUME = (11,709)(0.01) = (–) 117 GAL.

TANK VOLUME = $\pi (4.00)^2 (26.83)(7.48)$ = (–) 10,088 GAL.

TOTAL EXCESS CONTAIMENT VOLUME = (+) 1,504 GAL.

SECTION 09900R

PAINTING

PART 1 - GENERAL

1.1 SUMMARY

A. Paint and finish exposed surfaces as identified in Drawings, as specified herein, and as needed for a complete and proper installation.

B. Related Work:
1. Documents affecting work of this Section include, but are not necessarily limited to, General Conditions, Supplementary Conditions, and Sections in Division 1 of these Specifications.
2. Priming or priming and finishing of certain surfaces may be specified to be factory-performed or installer-performed under other Sections.
3. Other:
   a. 04200 - Unit Masonry
   b. 05201 - Open Web Steel Joists
   c. 05300 - Metal Decking
   d. 05500 - Structural Steel/Miscellaneous Metal
   e. 05510 - Metal Stairs
   f. 06200 - Finish Carpentry
   g. 07900 - Sealants and Caulking
   h. 08110 - Hollow Metal Doors and Frames
   i. 08200 - Wood Doors
   j. 09260 - Gypsum Wallboard
   k. 15488 - Gas Piping
   l. 15550 - Process Piping

C. Work Included:
1. Exterior
   a. Doors
   b. Metal Trim not pre-finished
   c. Pipes
   d. Tanks
   e. Other items as noted on Drawings and specified in these Specifications.
2. Interior
   a. All interior surfaces in exposed areas not previously pre-finished.
   b. Doors.
   c. Metal trim not pre-finished.
   d. Steel bumper posts.
   e. Metal stairs, posts and rails
   f. CMU block walls
3. Protect adjacent surfaces not scheduled to receive paint.
4. Prepare surfaces to receive paint.
5. Execute miscellaneous work not specifically mentioned, but required to complete work.

D. Work Not Included:
1. Unless otherwise indicated, painting is not required on surfaces in concealed areas and inaccessible areas such as furred spaces, foundation spaces, utility tunnels, pipe spaces, and duct shafts.
2. Metal surfaces of anodized aluminum, stainless steel, chromium plate, copper, bronze, and similar finished materials will not require painting under this Section except as may be so specified.
3. Do not paint moving parts of operating units; mechanical or electrical parts such as valve operators; linkages; sensing devises; and motor shafts, unless otherwise indicated.
4. Do not paint over required labels or equipment identification, performance rating, name, or nomenclature plates.
5. Do not paint concrete unless otherwise specified.

1.2 MOCK-UP

A. Before proceeding with interior wall paint applications, finish one complete surface of each color scheme required clearly indicating selected colors, finish texture, materials and workmanship.

B. If approved, sample area will serve as a minimum standard for work throughout the building.

1.3 SUBMITTALS

A. Product Data
1. Manufacturers specification data sheets to show compliance with these specifications.

B. Samples
1. Prepare 12" x 12" samples of all finishes when requested by Owner. When possible, apply finishes on identical type materials to which they will be applied on job.
2. Identify each sample as to finish, formula, color name and number, and sheen name and gloss units.

C. Colors to be selected by Owner prior to commencement of work.

1.4 MAINTENANCE MATERIALS

A. Leave on premises, where directed by Owner, not less than one gallon of each color used.

B. Containers to be tightly sealed and clearly labeled for identification.

1.5 DELIVERY, STORAGE AND HANDLING

A. Deliver paint materials in sealed original labeled containers, bearing manufacturer's name, type of paint, brand name, color designation and instructions for mixing and/or reducing.

B. Provide adequate storage facilities. Store paint materials at minimum ambient temperature of 45°F in well ventilated area.

C. Take precautionary measures to prevent fire hazards and spontaneous combustion.

1.6 ENVIRONMENTAL CONDITIONS

A. Exterior: Do not paint if air or surface temperature is below 50°F, or immediately following rain or until frost, dew or condensation has evaporated. Interior: Maintain a minimum interior temperature of 65° during application and drying of paint, and until building occupancy occurs. Provide adequate ventilation to control excessive humidity.

B. Do not apply finishes in areas where dust is being generated.

C. Provide minimum 25 foot-candles of lighting on surfaces to be finished.

1.7 PROTECTION

A. Adequately protect other surfaces from paint and damage. Repair damage as a result of inadequate protection.

B. Furnish sufficient drop cloths, shields and protective equipment to prevent spray or droppings from fouling surfaces not being painted and, in particular, surfaces within storage and preparation area.

C. Place cotton waste cloths and materials which may constitute a fire hazard in closed metal containers and remove daily from site.

D. Remove electrical plates, surface hardware, fittings and fasteners prior to painting operations. These items are to be carefully stored, cleaned and replaced on completion of work in each area. Do not use solvent to clean hardware that may remove permanent lacquer finish.

1.8 SAFETY

A. OSHA and Owner safety regulations shall be strictly adhered to.

B. All safety precautions noted on labels and MSDS shall be followed.

1.9 QUALITY ASSURANCE

A. Use adequate numbers of skilled workmen who are thoroughly trained and experienced in the necessary crafts and who are completely familiar with the specified requirements and the methods needed for proper performance of the work of this Section.

B. Paint Coordination:
1. Provide finish coats which are compatible with the prime coats actually used.
2. Review other Sections of these Specifications as required, verifying the prime coats to be used and assuring compatibility of the total coating system for the various substrata.
3. Upon request, furnish information on the characteristics of the specific finish materials to assure that compatible prime coats are used.
4. Provide barrier coats over non-compatible primers, or remove the primer and reprime as required.
5. Notify the Engineer in writing of anticipated problems in using the specified coating systems over prime-coatings supplied under other Sections.

C. Submit manufacturer's written certification that products used on this project meet or exceed any local or state non-combustible finish requirements.

PART 2 - PRODUCTS

2.1 ACCEPTABLE MANUFACTURERS

A. Paint, enamel, and fillers; type and brand listed herein as a standard of quality, are manufactured by Sherwin Williams. Other acceptable manufacturers are:
   1. Benjamin Moore
   2. Pratt and Lambert
   3. Gliddens

B. Use products of a single manufacturer for painting each type of surface.

C. Paint accessory materials: Secondary products not specified by name, but required to achieve the finishes specified, shall be "best grade" or "first line" products of a reputable manufacturer.

D. Paints: Ready-mixed. Pigments fully ground, maintaining a soft paste consistency, capable of readily and uniformly dispersing to a complete homogenous texture.

E. Paints to have good flowing and brushing properties and be capable of drying or curing free of streaks, sags, runs or other defects.

F. All colors to be selected by Owner.

2.2 MIXING AND TINTING

A. Deliver paints and enamels ready-mixed to job site.

B. Job tinting will not be allowed.

2.3 APPLICATION EQUIPMENT

A. Use only such equipment as is recommended for application by the manufacturer of that paint.

B. Prior to use of application equipment, verify that the proposed equipment is actually compatible with the material to be applied, and that integrity of the finish will not be jeopardized by use of the proposed equipment.

2.4 OTHER MATERIALS

A. Provide other materials, not specifically described but required for a complete and proper installation, as selected by the Contractor subject to the approval of the Engineer.

PART 3 - EXECUTION

3.1 SURFACE CONDITIONS

A. Examine surfaces scheduled to receive paint and finishes for conditions that will adversely affect execution, permanence or quality of work and which cannot be put into acceptable condition through preparatory work specified herein.

B. Report in writing to Engineer, any condition that may affect the proper application of work specified under this section.

C. Do not proceed with surface preparation or coating application until conditions are suitable.

D. Start of the work constitutes acceptance of construction conditions.

3.2 SURFACE PREPARATION

A. Wood
1. Clean soiled surfaces with alcohol wash.
2. Sand to smooth even surface, then dust off with tack cloth.
3. Apply knot sealer to all knots, pitch and resinous sapwood before priming coat is applied.
4. After prime coat has dried, fill nail holes, cracks, open joints and other joints with putty consistent with type of finish being applied. Color to match finish color.

B. Gypsum Wallboard
1. Fill narrow, shallow cracks and small holes with spackling compound.
2. Rake deep, wide cracks and deep holes
   a. Dampen with water
   b. Fill with thin layers of patching plaster (for plaster work) or drywall joint cement (for gypsum wallboard).
3. Texture finish to match that adjacent to area being patched.
4. Allow to dry.
5. Sand smooth (unless texture matches adjacent surface without sanding). Do not raise nap of paper on gypsum wallboard.
6. Wipe down all surfaces with tack cloth prior to prime painting.

C. Hollow Metal and Ferrous Metal Items
1. Clean surface contamination and oils from surfaces with a solvent wash.
2. Touch sand manufacturer's shop prime coat, as required to remove runs of other defects and to assure good adhesion of finish paint.
3. Wipe clean with tack cloth.
4. Touch up shop prime coat, feathering out edges to make touch up patches inconspicuous.

D. Tanks and Pipes
1. Before any surface is coated, it shall be thoroughly cleaned of all dust, dirt, grease, oil, solvents, loose rust, mill scale, old paint or any other substance which will inhibit proper application of paint.
2. Tanks are delivered to the site shop primed.
3. Sand tank's shop prime coat as required to remove defects and to assure good adhesion of finish paint.

E. CMU Interior Block Walls
1. Prepare surfaces for coating.
2. Surfaces must be free of laitance, concrete, dust, dirt, form release agents, moisture curing membranes, loose cement and hardeners.
3. Concrete and mortar must be cured at least 30 days at 75°F or according to manufacturer's recommendations.
4. Patch surface imperfections with cement patching compound.

3.3 PROTECTION

A. Adequately protect other surfaces from paint and damage. Repair damage as a result of inadequate or unsuitable protection.

B. Furnish sufficient drop cloths, shields and protective equipment to prevent spray or droppings from fouling surfaces not being painted and in particular, surfaces within storage and preparation area.

C. Place cotton waste, cloths and material which may constitute a fire hazard in closed metal containers and remove daily from site.

D. Prior to painting operations, remove electrical plates, surface hardware, fittings and fastenings. These items are to be carefully stored, cleaned and replaced upon completion of work in each area. Do not use solvent to clean hardware that may remove permanent lacquer finish.

3.4 APPLICATION

A. General Requirements

1. Do not apply initial coating until moisture content of surface is within limitations recommended by paint manufacturer.
   a. Test with moisture meter.
2. Apply paint enamel and varnish with suitable brushes or rollers.
   a. Rate of application shall not exceed that as recommended by paint manufacturer for the surface involved.
   b. Keep brushes and rollers, clean, dry, free from contaminants and suitable for this finish required.
3. Comply with recommendation of product manufacturer for drying time between succeeding coats.
4. Vary slightly the color of successive coats.
5. Sand and dust between each coat to remove defects visible from a distance of five feet.
6. Finish coats shall be smooth, free of brush marks, streaks, laps, or pile up of paints, and skipped or missed areas.
7. Inspection
   a. Do not apply additional coats until completed coat has been inspected by the Owner/Engineer.
   b. Only inspected coats of paint will be considered in determining number of coats applied.
8. Leave all parts of moldings and ornaments clean and true to details with no undue amount of paint in corners and depressions.
9. Make edges of paint adjoining other materials or colors clean and sharp with no overlapping.
10. Apply primer on all work before glazing.
11. Change colors at door stops where colors differ between adjoining spaces or rooms and where door frames match wall colors.
12. Refinish whole wall where portion of finish has been damaged by demolition, or is not acceptable. Finish to the nearest intersection of in the case of an assembly, such as doors and frames, refinish entire assembly, or as noted on finish schedule.
13. Back prime all new interior trim.
14. Runs on face are not permitted.
15. Paint or varnish, as Scheduled, tops, edges, and bottoms of doors.

B. Brush Applications:
   1. Brush out and work the brush coats onto the surface in an even film.
   2. Cloudiness, spotting, holidays, laps, brush marks, runs, sags, ropiness, and other surface imperfections will not be acceptable.

C. Spray Application:
   1. Where spray application is used, apply each coat to provide the hiding equivalent of brush coats.

   2. Do not double back with spray equipment to build up film thickness of two coats in one pass.

D. Miscellaneous Surfaces and Procedures:
   1. Wet areas:
      a. In toilet rooms, locker rooms, mud rooms, and contiguous areas, add an approved fungicide to paints.

E. Tank and Pipe Painting
   1. All coatings shall be applied in a workmanlike manner to achieve dry mil film build, leaving a smooth, uniform appearing coat.
   2. Do not begin painting until tank and piping construction is complete.
   3. Apply three coats of paint to non-primed piping and tank areas, and two coats to shop primed tanks.
   4. If sandblasting of tank is required, apply primer coat immediately after completion of blasting and cleaning of dust and debris.

F. CMU - Exterior Block Walls
   1. Apply only as much sealer/conditioner as surface will absorb.
   2. Do not build up visible glaze on the surface.
   3. Do not apply over damp surfaces, as the moisture prevents proper penetration.

G. CMU - Interior Block Walls
   1. Apply filler/sealer coating by spray, followed by roller, being careful to force material into pores, in order to produce a relatively smooth surface.

3.5 EXTERIOR PAINT SCHEDULE

A. Wood Painted
   1. Prime Coat: A-100 Alkyd Exterior Wood Primer (Y24W20).
   2. Finish: Two coats Industrial Enamel (B54 Series).

B. Wood Stained
   1. Two coats Exterior Alkyd Semi-Transparent Wood Preservative Stain (A14 Series).

C. Hollow Metal and Ferrous Metal Items
   1. Prime Coat: Kem Kromik Metal Primer (B50N2).
   2. Finish: Two coats Industrial Enamel (B54 Series).

D. Aluminum
   1. Prime Coat: Zinc Chromate Primer (B50Y1).
   2. Finish: SWP Exterior Gloss Paint (A2 Series)

E. Galvanized Metal
1. Prime Coat: Galvite Paint (B50W3).
2. Finish: Two coats, SWP Exterior Gloss Paint (A2 Series).

F. Tank and Piping
1. Primer Coat: Sherwin-Williams Zinc Clad III, 3-4 mils dry, 6-8 mils wet. Allow 24 hours to dry.
2. Intermediate Coat: Apply one coat Sherwin-Williams DTM Acrylic Gloss, B66 Series, Color no. MC-64 Silver (light grey), 3-4 mils dry, 8-10 mils wet. Allow to dry overnight.
3. Finish Coat: Apply one coat Sherwin-Williams DTM Acrylic Gloss, B66W101 series, 3-4 mils dry, 8-10 mils wet, in selected color (Tanks - white; Pipes - grey) per Owner.

G. CMU - Exterior Block Walls
1. Apply Masonry Conditioner (A5V2) thinned with up to 2 quarts per gallon with mineral spirits (as recommended by manufacturer according to block porosity).

3.6 INTERIOR PAINT SCHEDULE

A. See Room Finish Schedule or Drawings.

B. Wood Painted
1. Prime Coat: Wall and Wood Primer (B49W2).
2. Finish: Two coats, Industrial Enamel (B54 Series).

C. Wood Stained
1. Prime Coat: One coat Oil Stain (A48 Series).
2. Finish: Two coats Oil Base Varish Stain (A66F90). Apply first coat thinned with one pint mineral spirits per gallon.

D. Hollow Metal and Ferrous Metal
1. Prime Coat: Kem Kromik Primer (B50N2).
2. Finish: Two coats Industrial Enamel (B54 Series).

E. Gypsum Wallboard
1. Prime Coat: ProMar 200 Latex Wall Primer (B28W200).
2. Finish: Two coats ProMar 200 Latex Flat Wall Paint (B30W200), ProMar 200 Interior Latex Semi-Gloss Enamel (B31W200), or Tile Clad KK Epoxy (B62 Series) as shown on Drawings.

F. CMU - Interior Block Walls, Exposed
1. Prime Coat: ProMar Block Filler (B25W25)
2. Finish: Two coats Industrial Enamel (B54 Series)

3.7 PAINTING OF MISCELLANEOUS ITEMS

A. Provide painting of other items as indicated on the Drawings.

3.8 CLEANING

A. Touch up and restore finish where damaged.

B. Remove spilled, splashed, or splattered paint from all surfaces, as work proceeds, and upon completion.

C. Do not mar surface finish of item being cleaned.

D. During progress of work keep premises free from any unnecessary accumulation of tools, equipment, surplus materials, and debris.

E. Upon completion of work, leave premises in as good or better condition than it was when work started.

END OF SECTION

SECTION 15550

PROCESS PIPING

PART 1 - GENERAL

1.1 SUMMARY

A. Provide process pipe systems for the tank farms and return/fill areas as specified herein and as shown on the Drawings.

B. Related Work:
1. Documents affecting work of this Section include,but are not necessarily limited to, General Conditions, Supplementary Conditions, and Sections in Division 1 of these Specifications.
2. Other
   a. 15060 - Piping Materials & Methods
   b. 15100 - Valves
   c. 15140 - Hangers & Supports
   d. 15190 - Piping Identification System
   e. 15260 - Mechanical Pipe Insulation
   f. 15996 - Horizontal Tank and Pipe Testing

1.2 SUBMITTALS

A. Comply with pertinent provisions of Section 01340.

B. Product Data:
1. Manufacturer's specifications and other data needed to prove compliance with the specified requirements;
2. Letter of certification that materials and installation comply with these Specifications.

C. Welding Certification
1. Provide certification of approval, welding procedures, operators qualifications, etc. as required by ANSI B31.3.
2. Contractor shall prepare, maintain and submit all documentation including certificates of approval, welding procedures, welding operators qualifications, test reports, etc., as required.
3. In addition to the copies of all documentation requested by and submitted to all parties having jurisdiction, Contractor shall furnish to the Engineer three (3) copies for his record file.

1.3 QUALITY ASSURANCE

A. Use adequate numbers of skilled workmen who are thoroughly trained and experienced in the necessary crafts and who are completely familiar with the specified requirements and the methods needed for proper performance of the Work of this Section.

B. Design, fabricate and test equipment and materials in accordance with the manufacturer's recommended procedures and the applicable Sections of ANSI B31.3, "Chemical Plant and Petroleum Refinery Piping".

1.4 DELIVERY, STORAGE AND HANDLING

A. Comply with pertinent provisions of Section 01620.

PART 2 - PRODUCTS

2.1 FABRICATED STEEL PIPE

A. Pipe:
1. Type: Seamless.
2. Reference: ASME/ANSI B31.3, and NFPA 30.
3. Material: ASTM A53. Grade B minimum.
4. Diameter: Pipe diameter shown on the Drawings shall be interpreted to mean the nominal inside diameter of the pipe.

B. Joints:
1. Type: Flanged and welded.
2. Flanged and welded joints shall be per Drawings and applicable portions of ANSI B31.3 and NFPA 30.

C. Fittings:
1. Type: Welded or flanged, as shown on the Drawings and per applicable portions of ANSI B31.3 and NFPA 30.
2. Material: Comparable to pipe materials. ASTM A53 Grade B, minimum.

D. Identification:
1. Stamp, mark, or identify all pipeline materials with the following:
   a. Name of manufacturer.
   b. Date of manufacture.
   c. Operating design pressure at operating design temperature.
   d. Type of service.
   e. Manufacturer's part number.

E. Acceptable manufacturers: Pipe and materials shall be as specified in Section 15060 of these Specifications.

PART 3 - EXECUTION

3.1 INSTALLATION

A. All piping shall be installed per Section 15060 of these Specifications.

B. Welding
1. Contractor shall comply with the requirements of the applicable sections of ANSI B31.3, AWS and local jurisdiction.

3.2 CLEANING

A. Thoroughly clean and flush all piping prior to placing in service in a manner acceptable to the Engineer.

3.3 TESTING OF PIPING

A. Test all piping per Section 15994 - Tank and Pipe Testing, of these Specifications.

3.4 PAINTING

A. Paint all non-insulated pipe per Section 09900 of these Specifications.

END OF SECTION

SECTION 15996

HORIZONTAL TANK AND PIPE TESTING

PART 1 - GENERAL

1.1 SUMMARY

A. Furnish all labor, materials and equipment required for leak testing of tanks and piping in the Tank Farm Area.

B. Related Work
   1. Documents affecting Work of this Section include, but are not necessarily limited to, General Conditions, Supplementary Conditions, and Sections in Division 1 of these Specifications.

1.2 QUALITY ASSURANCE

A. Tanks shall be tested according to UL 142.

B. Piping shall be tested according to ANSI B31.3.

C. All horizontal tanks are to be air pressure tested to 5.0 psi plus or minus 5%, or plus or minus 0.25 psi. Each tank must hold this pressure within that 5% tolerance for a period of 30 minutes. For example, the pressure may drop to 4.75 psi in 30 minutes for a tank initially pressurized to 5.0 psi. Additional loss will not be accepted.

D. All piping is to be air pressure tested to 85.0 psi plus or minus 5%, or plus or minus 4.0 psi. Each piping run must hold this pressure within that 5% tolerance for a period of 45 minutes. For example, the pressure may drop to 81.0 psi in 45 minutes for a piping run initially pressurized to 85.0 psi. Additional loss will not be accepted.

1.3 TESTING EQUIPMENT

A. The Testing Company will be required to have at least one pressure gauge measuring 0-10 psi in maximum 1 psi increments, and one pressure gauge measuring 0-100 or 0-150 psi in maximum 5 psi increments. At least two quick disconnects and two shut-off valves at the disconnects will also be required, for the disconnects to permit the application of pressurized air to the system and for the valves to be able to close off the pressurized tank or piping system. An air compressor with a capacity of at least 100 psi will be required.

1.4 PROCEDURES

A. All tanks and pipes for this Work must be leak tested under the direct observation of a Registered Professional Engineer. The Owner will select and pay for the services of the Engineer. The Contractor is to successfully perform all tank and pipe tests prior to notifying the Professional Engineer that the system is ready for test observations.

B. Tank Test Procedure:

1. Disconnect the top-of-tank fill line if present, seal and plug the hole in the tank.
2. Remove the tank vents and tank gauging, if installed, and seal and plug the holes.
3. Close all tank valves securely.
4. In a previously unused tank connection, install the pressurizing assembly consisting of the 0-10 psi pressure gauge, a shut-off valve and a quick disconnect.
5. Seal and plug any remaining holes in the tank, including the manhole cover which is to be gasketed and fully bolted in ALL holes.
6. Record the Manufacturer's Tank No. and any labeling plates (written word for word) installed on the tank. Also make note if they are missing.
7. Pressurize the tank to 5.0 psi. Record the time. Soap water test all plugged openings, joints and around the manhole covers and their bolts. The tank can lose no more that 0.25 psi in 30 minutes. Check for leaks with the soap water solution and repair as required. Repeat the procedure until the tank will hold the test pressure for the required 30 minute test period.
8. LEAVE THE TANK IN THIS CONFIGURATION UNTIL THE PROFESSIONAL ENGINEER RESPONSIBLE FOR THE TESTING HAS OBSERVED THE TEST REPEATED IN HIS PRESENCE AND HAS ACCEPTED THE TANK FOR USE.
9. Re-install the tank vents and tank fluid level gauging equipment as per the Safety-Kleen drawings and specifications.
10. Remove the tank pressurizing assembly and seal and plug the port.
11. Repeat Steps 1 through 10 for each tank being tested.
12. When the piping tests have been completed, re-connect the tank fill lines, if applicable.
13. This completes the tank testing.

C. Piping Test Procedure:

1. Each tank/piping system is to be tested separately. Follow procedures below for each system.
2. Disconnect the top-of-tank fill line, if present. Seal and plug the hole in the end of line.
3. If applicable, remove the Return Line pump and install by-pass piping of equivalent size. Tighten securely.
4. Close valves at the tank access containers securely. Make sure all piping ends are capped and sealed.
5. Test each pipe run separately.
6. In the end of the piping segment being tested, install the pressurizing assembly consisting of the 0-100 psi or 0-150 psi pressure gauge, a shut-off valve and a quick disconnect.
7. Pressurize the line to 85.0 psi. Record the time. Soap water test all plugged openings, joints and other connections. The line can lose no more tn 4.0 psi in 45 minutes. Check for leaks with the soap water solution and repair the line as required. Repeat the procedure until the line will hold the test pressure for the required 45 minute test period.
8. LEAVE THE LINE IN THIS CONFIGURATION UNTIL THE PROFESSIONAL ENGINEER RESPONSIBLE FOR THE TESTING HAS OBSERVED THE TEST REPEATED IN HIS PRESENCE AND HAS ACCEPTED THE LINE FOR USE.
9. Remove the tank pressurizing assembly and reinstall the proper fittings as per the Safety-Kleen drawings and specifications.
10. Repeat Steps 1 through 8 for each piping segment until all segments have been tested.
11. When the tank testing has been completed, re-connect the tank fill lines, if applicable.
12. This completes the piping test.

1.5 ACCEPTANCE

A. The systems will only be accepted for use after both tank and piping tests have been completed and accepted by the Professional Engineer responsible for the testing.

1.6 RETESTING OF TANKS & PIPING

A. If the tanks and pipe are not configured per the plans and specifications when the Professional Engineer arrives on site for the test, or if any part of the tank and pipe system fails the pressure test while being performed in the presence of the Professional Engineer and the leak cannot be repaired in a timely enough manner, such that the Professional Engineer is required to make an additional trip to the site to complete the test; or if the trip needs to be extended to witness the test again, then the Contractor will be responsible for reimbursing the Owner for additional time and expenses incurred by the Professional Engineer, at the Engineer's published rates.

1.7 CLEANUP

A. It is the responsibility of the Testing Contractor to clean up the site of all testing materials and fluids which may have been spilled during the test.

END OF SECTION

NATIONAL FLOOD INSURANCE PROGRAM

FLOODWAY

FLOOD BOUNDARY AND FLOODWAY MAP

COUNTY OF
TAZEWELL,
ILLINOIS
(UNINCORPORATED AREAS)

EFFECTIVE DATE:
AUGUST 1, 1980

U.S. DEPARTMENT OF HOUSING AND URBAN DEVELOPMENT
FEDERAL INSURANCE ADMINISTRATION

KEY TO MAP

500-Year Flood Boundary	
100-Year Flood Boundary	
Zone Designations* With Date of Identification e.g., 12/2/74	ZONE B / ZONE A5 / ZONE A5 / ZONE B
100-Year Flood Boundary	
500-Year Flood Boundary	
Base Flood Elevation Line With Elevation In Feet**	813
Base Flood Elevation In Feet Where Uniform Within Zone**	(EL 997)
Elevation Reference Mark	RM7 ×
River Mile	• M1.5

**Referenced to the National Geodetic Vertical Datum of 1929

*EXPLANATION OF ZONE DESIGNATIONS

ZONE	EXPLANATION
A	Areas of 100-year flood; base flood elevations and flood hazard factors not determined.
AO	Areas of 100-year shallow flooding where depths are between one (1) and three (3) feet; average depths of inundation are shown, but no flood hazard factors are determined.
AH	Areas of 100-year shallow flooding where depths are between one (1) and three (3) feet; base flood elevations are shown, but no flood hazard factors are determined.
A1-A30	Areas of 100-year flood; base flood elevations and flood hazard factors determined.
A99	Areas of 100-year flood to be protected by flood protection system under construction; base flood elevations and flood hazard factors not determined.
B	Areas between limits of the 100-year flood and 500-year flood; or certain areas subject to 100-year flooding with average depths less than one (1) foot or where the contributing drainage area is less than one square mile; or areas protected by levees from the base flood. (Medium shading)
C	Areas of minimal flooding. (No shading)
D	Areas of undetermined, but possible, flood hazards.
V	Areas of 100-year coastal flood with velocity (wave action); base flood elevations and flood hazard factors not determined.
V1-V30	Areas of 100-year coastal flood with velocity (wave action); base flood elevations and flood hazard factors determined.

NOTES TO USER

Certain areas not in the special flood hazard areas (zones A and V) may be protected by flood control structures.

This map is for flood insurance purposes only; it does not necessarily show all areas subject to flooding in the community or all floodprone features outside special flood hazard areas.

For adjoining map panels, see separately printed Index To Map Panels.

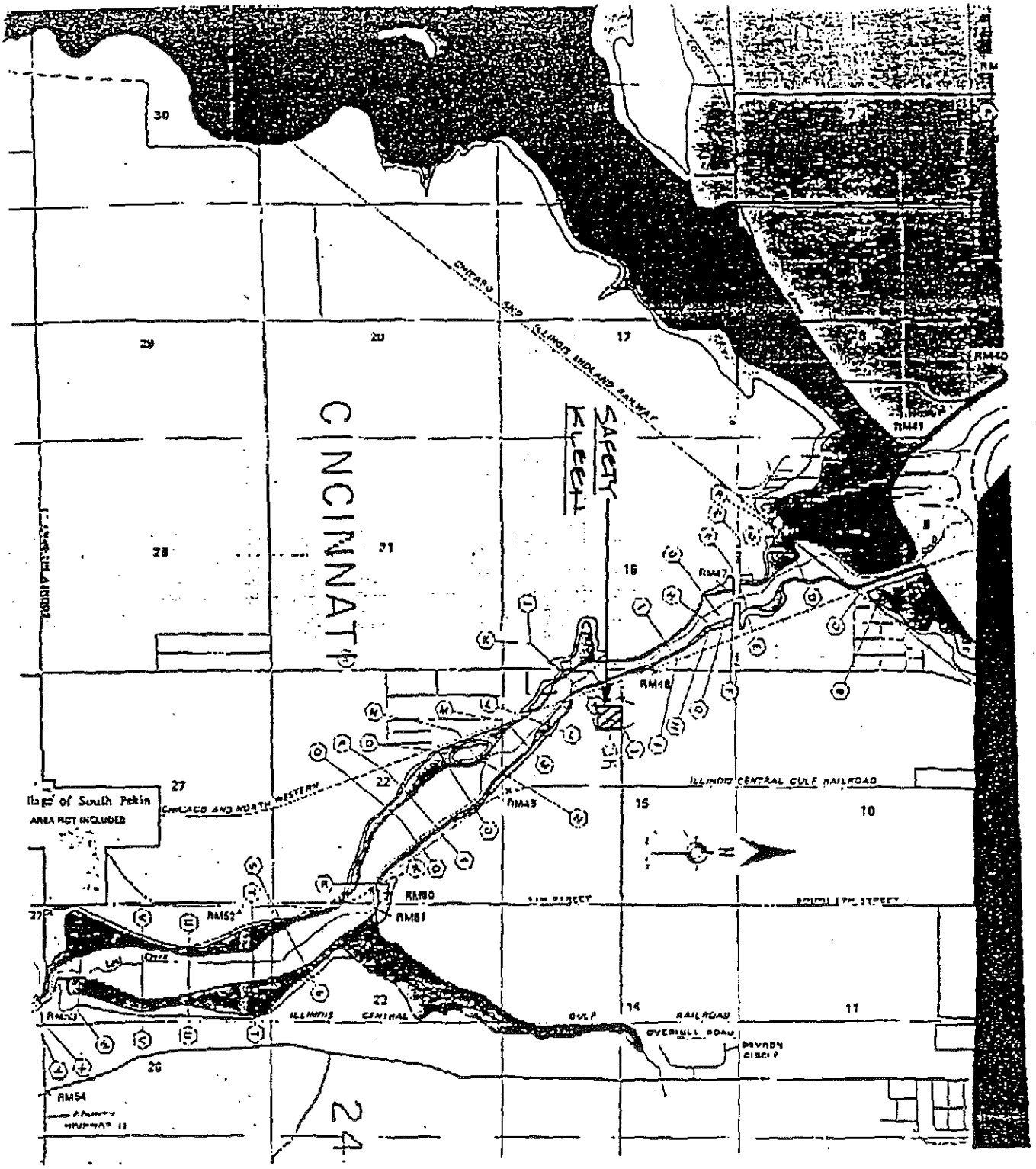
CINCINNATI
SAFETY FLEET
Village of South Pekin
AREA NOT INCLUDED
CHICAGO AND NORTH WESTERN
ILLINOIS CENTRAL GULF RAILROAD
ILLINOIS CENTRAL GULF RAILROAD
OVERHILL ROAD
RM41
RM46
RM47
RM48
RM49
RM50
RM51
RM52
RM54
30
29
28
27
26
25
24
23
22
21
20
17
16
15
14
11
10

APPENDIX B

Field Data

APPENDIX B

Field Data

Table of Contents

Title	Page No.
Site Field Data	B-1
Tank Farm Field Data	B-2
Tank Inspection Record	B-3
Piping Inspection Record	B-5
Containment Inspection Record	B-6
Tank Wall Thickness Test Results	B-7
Containment Wall Thickness Test Results	B-9
Pipe Wall Thickness Test Results	B-11
Tank & Pipe Tightness Test Report	B-12
Tank Farm Secondary Containment Calculations	B-13
Photographs	B-14

Used Antifreeze Tank

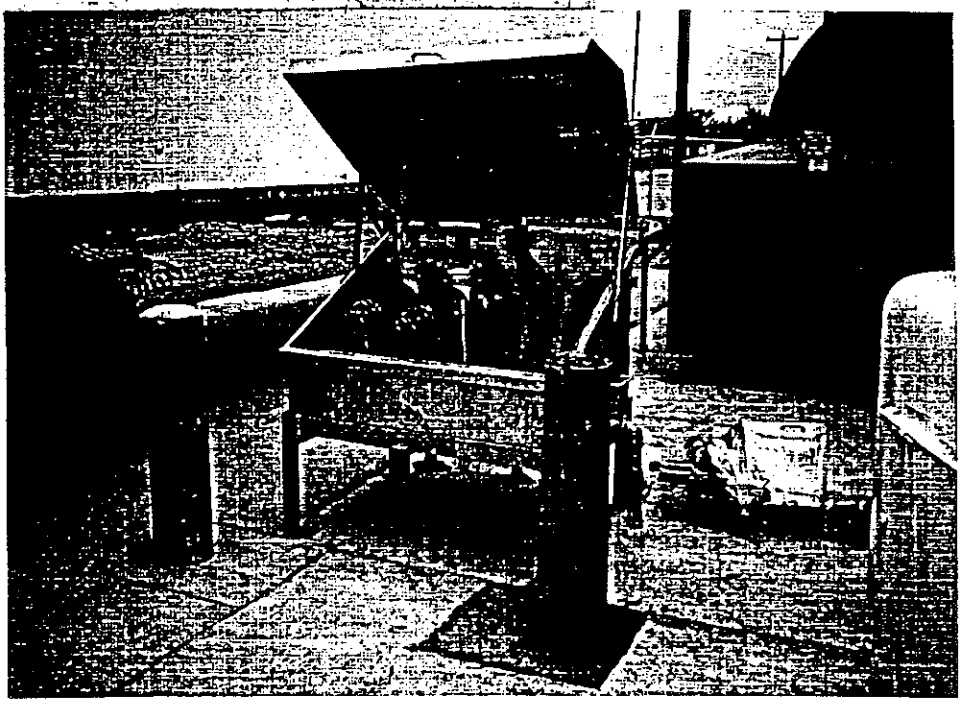

Concrete Filled Steel Bumper Posts at Access Container

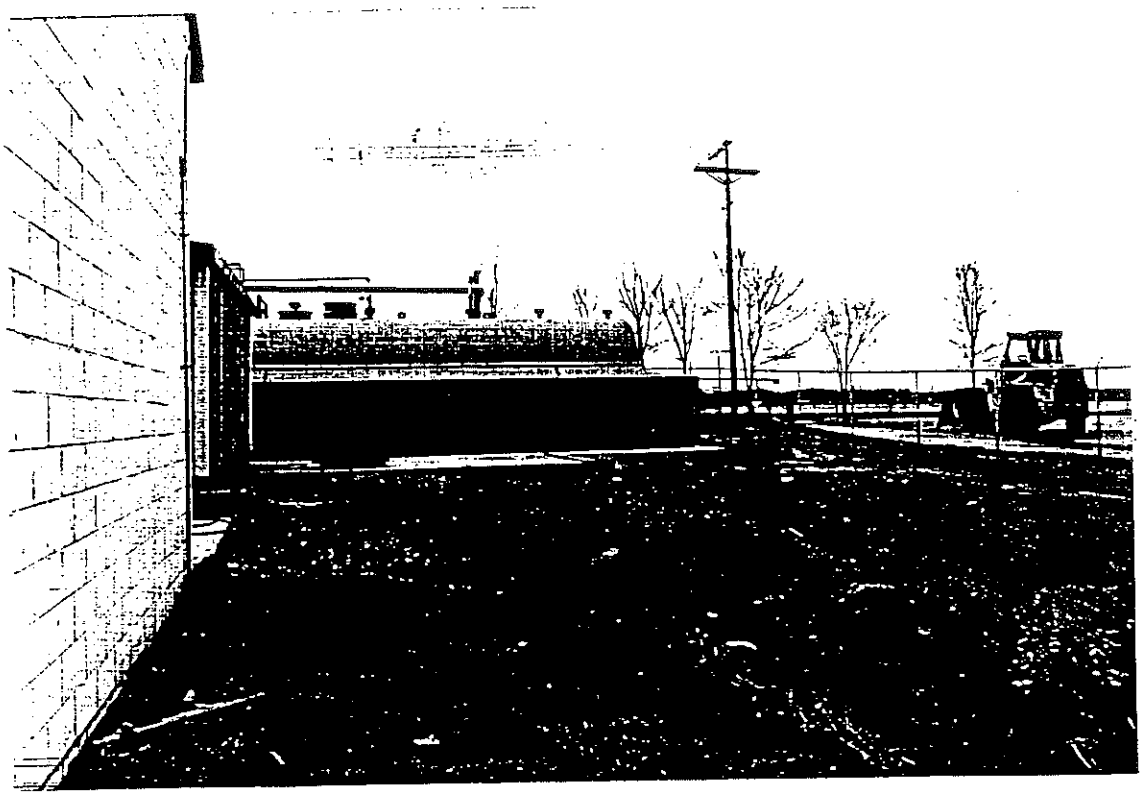

Used Antifreeze Tank

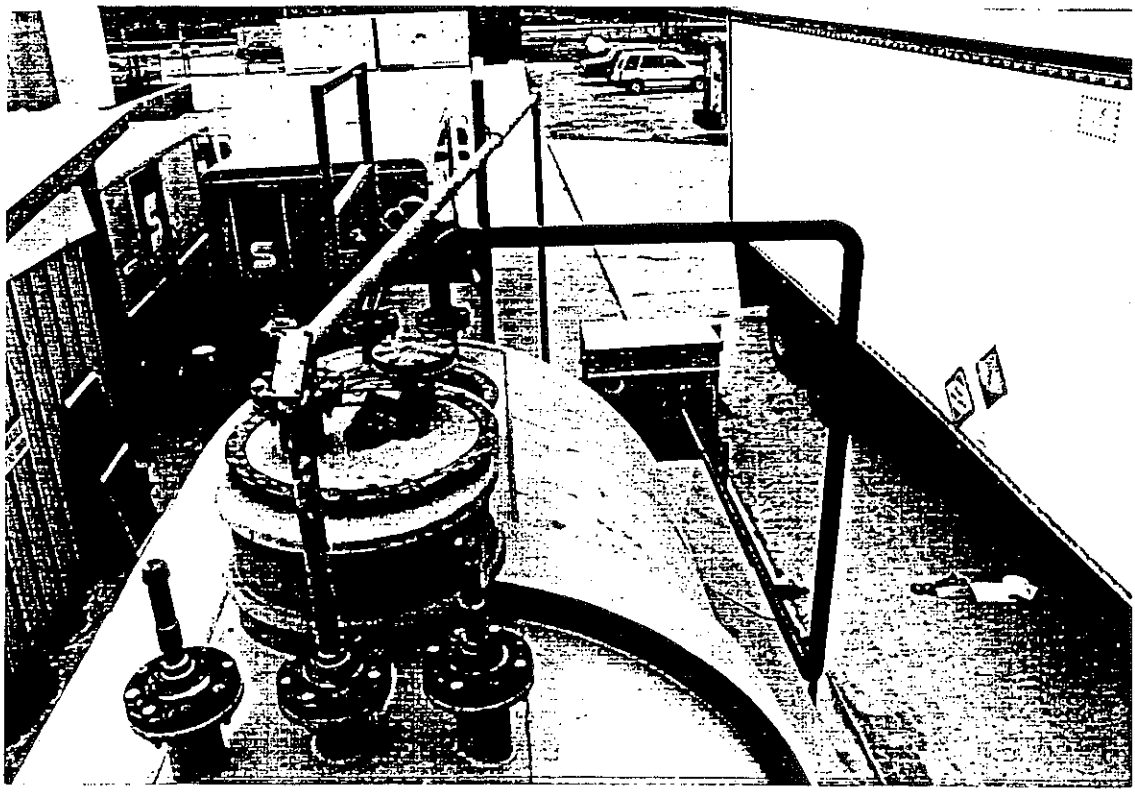

Used Antifreeze Piping Configuration

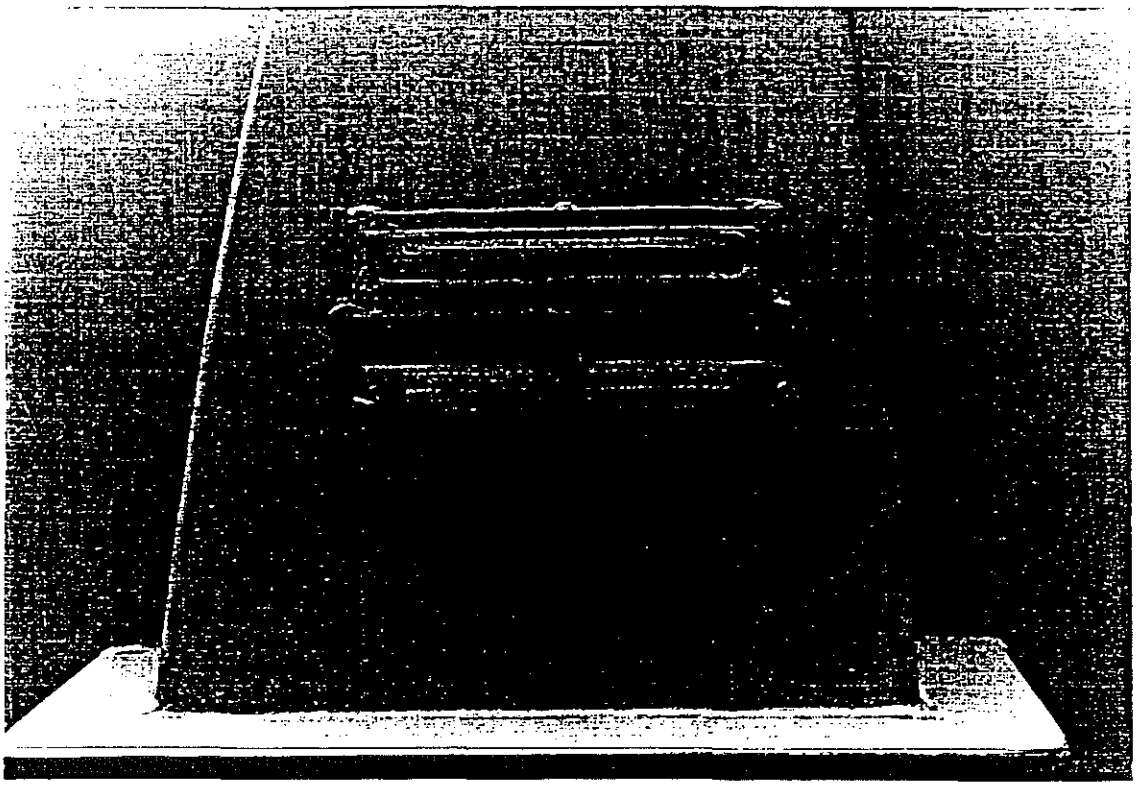

Tank Manufacturer's Label and UL 142 Label

Morrison Brothers 3" Normal Vent

Exhibit E-9
Tank Corrosion Data

SAFETY-KLEEN CORPORATION

FAX TRANSMITTAL SHEET

ATE: April 4, 1991

ROM: PAUL DITTMAR
SAFETY-KLEEN CORP.
TECHNICAL CENTER
P.O. BOX 92050
ELK GROVE VILLAGE, IL 60009-2050
PHONE: (312)694-2700
FAX: (312)694-2733

TO: RICK BARTEL

LOCATION: QUESTEK
4812 SANTANA CIRCLE
COLUMBIA, MO 65203

FAX NO.: (314)875-0299 PHONE: (314)875-0260

NUMBER OF PAGES, INCLUDING TRANSMITTAL SHEET: 1

SUBJECT: MATERIAL OF CONSTRUCTION FOR WASTE OIL AND SPENT ANTIFREEZE

According to SK's Engineering Department, carbon steel is the material of choice for both waste oil and spent antifreeze.

Regards,

Paul Dittmar,
Manager of Process and Product Development

file: MC91220

FROM PERRY'S CHEMICAL ENGINEER'S HANDBOOK 6TH EDITION

TABLE 23-2 Detailed Corrosion Data on Construction Materials* (*Continued*)

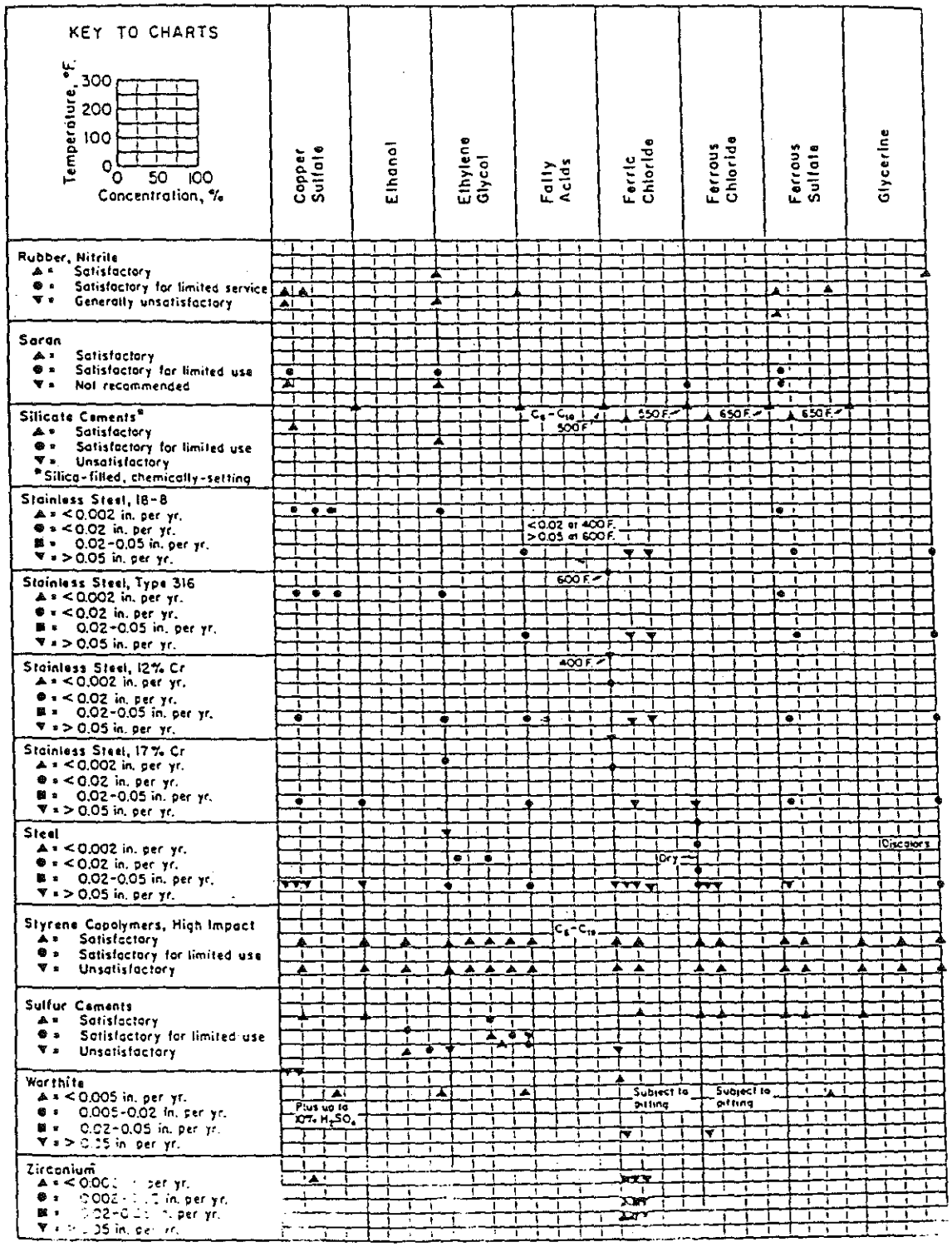

*To convert from inches to millimeters, multiply by 25.4.

other means of identification.

ds

ne the properties enumerated in
ion in accordance with the fol-
ethods of the American Society
id Materials:
Viscosity—Method D 88.
lation—Method D 402.
ration—Method D 5.
ble in Trichloroethylene—Method

er—Method D 95.

g the validity of any patent rights asserted d are expressly advised that determination ghts, is entirely their own responsibility.

committee and must be reviewed every five invited either for revision of this standard or comments will receive careful consideration ou feel that your comments have not received Standards, 1916 Race St., Philadelphia, Pa. ng satisfaction there, you may appeal to the

AMERICAN NATIONAL STANDARD ASTM D 235 – 77

Standard Specification for PETROLEUM SPIRITS (MINERAL SPIRITS)[1]

This Standard is issued under the fixed designation D 235; the number immediately following the designation indicates the year of original adoption or, in the case of revision, the year of last revision. A number in parentheses indicates the year of last reapproval.

1. Scope

1.1 This specification covers four types of hydrocarbon solvents, normally petroleum distillates, of low flammability used primarily by the coatings industry. These solvents are commonly referred to as mineral spirits.

2. Applicable Documents

2.1 *ASTM Standards:*

D 56 Test for Flash Point by Tag Closed Tester[2,3]

D 86 Distillation of Petroleum Products[2,3]

D 156 Test for Saybolt Color of Petroleum Products[3]

D 270 Sampling Petroleum and Petroleum Products[3]

D 484 Specification for Hydrocarbon Dry-cleaning Solvents[2]

D 875 Calculation of Olefins and Aromatics in Petroleum Distillates from Bromine Number and Acid Absorption[3]

D 891 Tests for Specific Gravity of Industrial Aromatic Hydrocarbons and Related Materials[3]

D 1133 Test for Kauri-Butanol Value of Hydrocarbon Solvents[3]

D 1159 Test for Bromine Number of Petroleum Distillates and Commercial Olefins by Electrometric Titration[3]

D 1209 Test for Color of Clear Liquids (Platinum-Cobalt Scale)[4]

D 1296 Test for Odor of Volatile Solvents and Diluents[2]

D 1616 Test for Copper Corrosion by Mineral Spirits (Copper Strip Test)[2]

D 3257 Test for Aromatics in Mineral Spirits by Gas Chromatography[2]

3. Classification

3.1 Mineral spirits shall be of the following types, as specified.

3.1.1 *Type I*—Regular.

3.1.2 *Type II*—High Flash.

3.1.3 *Type III*—Odorless.

3.1.4 *Type IV*—Rule 66 Exempt.

4. Properties

4.1 The physical and chemical properties of mineral spirits shall conform to the requirements specified in Table 1.

5. Sampling

5.1 The material shall be sampled in accordance with Method D 270.

6. Test Methods

6.1 The properties enumerated in this specification shall be determined in accordance with the following ASTM methods:

6.1.1 *Aromatics*—Method D 3257.

6.1.2 *Bromine Number*—Method D 1159.

6.1.3 *Color*—Methods D 156 or D 1209. In case of dispute, Method D 156 shall be the referee method.

6.1.4 *Corrosion*—Method D 1616.

6.1.5 *Distillation*—Method D 86.

6.1.6 *Doctor Test*—See Specificatio D 484.

[1] This specification is under the Committee D-1 on Paint and rials and is the dir D01.35 on Sol- diates.

D
pr

.1.7 *Flash Point*—Method D 56.

.1.8 *Kauri-Butanol Value*—Method 1133.

.1.9 *Odor*—Method D 1296. Samples of ticular types of products being tested, hav- odor characteristics satisfactory to con- ner and producer, are to be used as refer- ence standards for comparison.

6.1.10 *Olefins*—Method D 875.

6.1.11 *Apparent Specific Gravity*—Method D 891. In case of dispute, apparent specific gravity at 60/60°F (15.6/15.6°C) is controlling.

TABLE 1 Physical and Chemical Properties of Mineral Spirits

	Type I	Type II	Type III	Type IV
mmercial reference	regular	high flash	odorless	rule 66 exempt
pearance	clear and free of suspended matter and undissolved water			
outine number, max	5	5	5	...
lor	not darker than +25 on the Saybolt scale or 25 on the platinum-cobalt scale			
mposition, max, volume %:				
Aromatics having 8 or more carbon atoms (except ethylbenzene)	...	...	...	8
Olefins	...	...	...	5
Total aromatics plus olefins	...	...	...	20
opper corrosion, max rating	1	1	1	1
istillation, °F (°C):				
Initial boiling point, min	300 (149°C)	350 (177°C)	320 (160°C)	300 (149°C)
50 % recovered, max	350 (177°C)	385 (196°C)	385 (196°C)	385 (196°C)
Dry point, max	415 (213°C)	415 (213°C)	415 (213°C)	415 (213°C)
ocor test	negative	negative	negative	negative
lash point, min, °F (°C)	100 (38°C)	140 (60°C)	100 (38°C)	100 (38°C)
auri-butanol value:				
min	29	29	...	...
max	45	45	29	45
dor	characteristic, nonresidual			
pparent specific gravity 60/60°F (15.6/15.6°C):				
min	0.768	0.788	...	...
max	0.820	0.820	0.775	0.810
pparent specific gravity 25°/25°C:				
min	0.762	0.762	...	...
max	0.814	0.814	0.768	0.810

The American Society for Testing and Materials takes no position respecting the validity of any patent rights asserted n connection with any item mentioned in this standard. Users of this standard are expressly advised that determination f the validity of any such patent rights and the risk of infringement of such rights is entirely their own responsibility.

This standard is subject to revision at any time by the responsible technical committee and must be reviewed every five years and if not revised, either reapproved or withdrawn. Your comments are invited either for revision of this standard or for additional standards, and should be addressed to ASTM Headquarters. Your comments will receive careful consideration at a meeting of the responsible technical committee, which you may attend. If you feel that your comments have not received a fair hearing you should make your views known to the ASTM Committee on Standards, 1916 Race St., Philadelphia, Pa. 19103, which will schedule a further hearing regarding your comments. Failing satisfaction there, you may appeal to the ASTM Board of Directors.

Designation: D 304 – 80

Standard Specificatior NORMAL BUTYL AL

This standard is issued under the fixed designatio year of original adoption or, in the case of revision, reapproval.

1. Scope

1.1 This specification covers norma alcohol (butanol).

2. Applicable Documents

2.1 *ASTM Standards:*

D 268 Sampling and Testing Volat vents and Chemical Intermediates in Paint, and Related Coatings a terials[2]

D 1078 Test for Distillation Range c tile Organic Liquids[2]

D 1209 Test for Color of Clear Liquic inum-Cobalt Scale)[2]

D 1296 Test for Odor of Volatile S and Diluents[2]

D 1353 Test for Nonvolatile Matter i tile Solvents for Use in Paint, V Lacquer, and Related Products[2]

D 1364 Test for Water in Volatile S (Fischer Reagent Titration Method

D 1476 Test for Heptane Miscibility quer Solvents[2]

D 1613 Test for Acidity in Volatile S and Chemical Intermediates U Paint, Varnish, Lacquer, and I Products[2]

E 1 Specification for ASTM Thermo

E 300 Recommended Practice for Sa Industrial Chemicals[2]

3. Properties

3.1 Normal butyl alcohol (butano conform to the following requirements:

Apparent specific gravity:	
20/20°C	0.810 to 0.813
25/25°C	0.807 to 0.810
Color	not more than No. 10 on inum-cobalt scale

APPENDIX F
PROCEDURES TO PREVENT HAZARDS

Exhibit F-1
Example Inspection Log Sheets for:
Daily Inspection of Storage Tank System

INSPECTION LOG SHEET FOR:
DAILY INSPECTION OF STORAGE TANK SYSTEM

SPECTOR'S
AME/TITLE_____

EXAMPLE

Inspector's Signature: Sign on the day inspection is performed.

	MONDAY	TUESDAY	WEDNESDAY	THURSDAY	FRIDAY
Name:					
Date:					
Time:					

TORAGE TANKS

	MON	TUES	WED	THURS	FRI
TRERIOR					
If "N" circle appropriate problem: Rusty or loose anchoring, lack of grounding, wet spots, discoloration distortion, leaks, other:	A N	A N	A N	A N	A N
GH LEVEL ALARMS					
If "N" circle appropriate problem: Malfunctioning "power on light", siren/ strobe light, other:	A N	A N	A N	A N	A N
LUME GAUGES					
If "N" circle appropriate problem: Disconnected, sticking, other:	A N	A N	A N	A N	A N

ONTAINMENT (DIKE) AREA

ıy material, which spills, leaks or otherwise accumulated in the dike including rainwater, must be completely removed within 24 hours.

TTOM AND WALLS					
If "N" circle appropriate problem: Cracks, ponding/wet spots, debris in dike, sealant is pitted, cracked or chipped, deterioration, leaks, other:	A N	A N	A N	A N	A N
GID PIPING & SUPPORT					
If "N" circle appropriate problem: Distortion, corrosion, paint failure, other:	A N	A N	A N	A N	A N

SERVATIONS, COMMENTS, DATE AND NATURE OF ANY REPAIRS

_____

_____

_____

_____

ACCEPTABLE

NOT ACCEPTABLE

an item is not applicable, enter "NA" after it and draw a line through the A/N row.)

Rev. 2/21/03

Exhibit F-2
Example Inspection Log Sheet for:
Daily Inspection of Drum Storage Area

INSPECTION LOG SHEET FOR:
INSPECTION OF PERMITTED WARESHOUSE STORAGE AREA

SPECTOR'S
AME/TITLE_____

EXAMPLE

Inspector's Signature: Sign on the day inspection is performed.

	Monday	Tuesday	Wednesday	Thursday	Friday
Name:					
Date:					
Time:					
	Total/Gals	Total/Gals	Total/Gals	Total/Gals	Total/Gals
Total Waste					
[redacted]					

	Mon	Tues	Wed	Thurs	Fri
TORED WASTE					
If "N" circle appropriate problem:	A N	A N	A N	A N	A N
Volume exceeds the amount permitted, other:					
TACKING/AISLE SPACE					
If "N" circle appropriate problem:	A N	A N	A N	A N	A N
Containers not on pallets, pallets too high, two foot					
Aisle space not provided, other:					
ONDITION OF CONTAINERS					
If "N" circle appropriate problem:	A N	A N	A N	A N	A N
Missing or loose lids, incorrect labels, leaks, other:					
ONTAINMENT CURBING, FLOOR & UMPS					
If "N" circle appropriate problem:	A N	A N	A N	A N	A N
Ponding, wet spots, cracks, gaps, other:					

Any material, which spills, leaks or otherwise accumulates in the secondary containment, must be removed within 24 hrs

BSERVATIONS, COMMENTS, DATE AND NATURE OF ANY REPAIRS

=ACCEPTABLE

=NOT ACCEPTABLE

an item is not applicable, enter "NA" after it and draw a line through the A/N row.)

Rev. 3/21/02

Exhibit F-3
Example Inspection Log Sheet for:
Weekly Inspection of Safety and Emergency
Equipment, Security Devices, and Miscellaneous Equipment

INSPECTION LOG SHEET FOR:
WEEKLY INSPECTION OF EMERGENCY, SAFETY, AND SECURITY EQUIPMENT

SPECTOR'S
AME/TITLE_____

EXAMPLE

Inspector's Signature: Sign on the day inspection is performed. Perform inspection on the same day every week.

	MONDAY	TUESDAY	WEDNESDAY	THURSDAY	FRIDAY
ame:					
ate:					
ime:					

AFETY AND EMERGENCY EQUIPMENT	Mon	Tues	Wed	Thurs	Fri
RE EXTINGUISHERS					
If "N" circle appropriate problem: Overdue inspection, inadequate charge, inaccessible, other:	A N	A N	A N	A N	A N
/EWASH and SHOWER					
If "N" circle appropriate problem: Disconnected or malfunctioning valves, inadequate pressure, Inaccessible, malfunctioning drain, leaking other:	A N	A N	A N	A N	A N
RST AID KIT					
If "N" circle appropriate problem: Inadequate inventory, other:	A N	A N	A N	A N	A N
ILL CLEANUP EQUIPMENT					
If "N" circle appropriate problem: Inadequate supply of sorbent, towels and/or vermiculite, Inadequate supply of shovels, mops, empty drums, other:	A N	A N	A N	A N	A N
ERSONAL PROTECTION EQUIPMENT					
If "N" circle appropriate problem: Inadequate supply of aprons, gloves, glasses, respirators, Emergency respirators, respirators missing components, Items not secured, items exposed to environment, other:	A N	A N	A N	A N	A N
OMMUNICATION DEVICES					
If "N" circle appropriate problem: Inadequate supply of telephones, malfunctioning, telephones, Malfunctioning intercom, emergency alarm does not work, Telephone moved from proper location, other:	A N	A N	A N	A N	A N
ECURITY DEVICES					
ATES AND LOCKS					
If "N" circle appropriate problem: Sticking, corrosion, lack of warning signs, fit, other:	A N	A N	A N	A N	A N
ENCE					
If "N" circle appropriate problem: Broken ties, corrosion, holes, distortion, missing Warning signs, other:	A N	A N	A N	A N	A N

BSERVATIONS, COMMENTS, DATE AND NATURE OF ANY REPAIRS

_____

_____

_____

ACCEPTABLE

NOT ACCEPTABLE

an item is not applicable, enter "NA" after it and draw a line through the A/N row.)

Rev. 3/21/02

Exhibit F4
Example Inspection Log Sheet for:
Daily Inspection of Flammable Storage Area

INSPECTION LOG SHEET FOR:
INSPECTION OF FLAMMABLE STORAGE AREA

SPECTOR'S
AME/TITLE_____

EXAMPLE

Inspector's Signature: Sign on the day inspection is performed.

	Monday	Tuesday	Wednesday	Thursday	Friday
Name:					
Date:					
Time:					
	Total/Gals	Total/Gals	Total/Gals	Total/Gals	Total/Gals
Total Waste					

	Mon	Tues	Wed	Thurs	Fri
'ORED WASTE					
If "N" circle appropriate problem:	A N	A N	A N	A N	A N
Volume exceeds the amount permitted, other:					
'ACKING/AISLE SPACE					
If "N" circle appropriate problem:	A N	A N	A N	A N	A N
Containers not on pallets, pallets too high, two foot					
Aisle space not provided, other:					
)NDITION OF CONTAINERS					
If "N" circle appropriate problem:	A N	A N	A N	A N	A N
Missing or loose lids, incorrect labels, leaks, other:					
)NTAINMENT CURBING, FLOOR & IMPS					
If "N" circle appropriate problem:	A N	A N	A N	A N	A N
Ponding, wet spots, cracks, gaps, other:					

Any material, which spills, leaks or otherwise accumulates in the secondary containment, must be removed within 24 hrs

3SERVATIONS, COMMENTS, DATE AND NATURE OF ANY REPAIRS

:ACCEPTABLE

:NOT ACCEPTABLE

Rev. 3/21/02

ın item is not applicable, enter "NA" after it and draw a line through the A/N row.)

Exhibit F-5
Example Inspection Log Sheet for:
Daily Inspection of Return and Fill Area

INSPECTION LOG SHEET FOR:
DAILY INSPECTION OF RETURN & FILL AREA

SPECTOR'S
AME/TITLE_____

EXAMPLE

Inspector's Signature: Sign on the day inspection is performed.

	MONDAY	TUESDAY	WEDNESDAY	THURSDAY	FRIDAY
Name:					
Date:					
Time:					

RANSFER PUMPS AND HOSES	MON	TUES	WED	THURS	FRI
IMP SEALS					
If "N" circle appropriate problem: Leaks, other:	A N	A N	A N	A N	A N
OTORS					
If "N" circle appropriate problem: Overheating, other:	A N	A N	A N	A N	A N
TTINGS					
If "N" circle appropriate problem: Leaks, other:	A N	A N	A N	A N	A N
ILVES					
If "N" circle appropriate problem: Leaks, sticking, other:	A N	A N	A N	A N	A N
OSE CONNECTIONS AND FITTINGS					
If "N" circle appropriate problem: Cracked, loose, leaks, other:	A N	A N	A N	A N	A N
SE BODY					
If "N" circle appropriate problem: Crushed, cracked, thin spots, leaks:	A N	A N	A N	A N	A N
ISABLE LINK					
If "N" circle appropriate problem: Broken, spring missing, other:	A N	A N	A N	A N	A N
O HINGE ASSEMBLY					
If "N" circle appropriate problem: Broken pivot arm, damaged lid arm, missing pins, other:	A N	A N	A N	A N	A N
ET DUMPSTER					
If "N" circle appropriate problem: Excess sediment, leaks, rust, split seems, distortion, deterioration, excess debris, other:	A N	A N	A N	A N	A N
ECONDARY CONTAINMENT					
If "N" circle appropriate problem: Excess sediment/liquid, leaks, distortion, deterioration, excess debris, other:	A N	A N	A N	A N	A N
OADING/UNLOADING AREA					
If "N" circle appropriate problem: Cracks, ponding/wet spots, deterioration, other:	A N	A N	A N	A N	A N

BSERVATIONS, COMMENTS, DATE AND NATURE OF ANY REPAIRS

ACCEPTABLE

NOT ACCEPTABLE

an item is not applicable, enter "NA" after it and draw a line through the A/N row.)

Rev. 2/21/03

Table F-1
Emergency Equipment List

TABLE F-1 EMERGENCY EQUIPMENT LIST Continued		
Shovel	Emergency equipment areas - Outside of office area and warehouse foyer area	2
Mop & Bucket	Warehouse	1
Wet/Dry Vacuum	Warehouse	1
Oil Dry	Warehouse	150 pounds
Emergency Blanket	Emergency equipment area - Outside of office area	1
Steel-Toed Rubber Boots	Emergency equipment area - Outside of office area	1
Skin/Eye Wash	Emergency equipment areas - Outside of office area and warehouse foyer area	10 Bottles
Half-Face Respirators	Emergency equipment areas - Outside of office area and warehouse foyer area	4
MSDS Binder & S-K Material Handling Guide	Emergency equipment areas - Outside of office area and warehouse foyer area	1 of Each

*These items and a reflector kit are also located on each route vehicle.

1 Specification 4-A:60-B:C
2 Specification 20-A:120-B:C
3 Specification10-A:60-B:C
4 Specication 330-A:B:C
5 Emergency equipment areas are located between the office and warehouse area of the northwest building and in the foyer area of the southeast warehouse building.

TABLE F-1
EMERGENCY EQUIPMENT LIST

DESCRIPTION	LOCATION	MINIMUM QUANTITY
Fire Extinguisher	Return and Fill Station[1], Tank farm tanker truck unloading area[2], warehouse - foyer[3], entrance to container storage area[1], office[4], flammable waste shelter[1]	8
Eyewash*	Warehouse, return/fill station	2
First Aid Kit*	Emergency equipment areas - Outside of office area and warehouse foyer area	2
Telephones	Office	7
Shower	Office	1
Ventilation (ceiling vents)	Warehouse	1
Rubber Gloves*	Emergency equipment areas - Outside of office area and warehouse foyer area	6
Plastic Aprons*	Emergency equipment areas - Outside of office area and warehouse foyer area	4
Safety Glasses*	Emergency equipment areas - Outside of office area and warehouse foyer area	8
Safety Goggles	Emergency equipment areas - Outside of office area and warehouse foyer area	6
Sorbent Material*	Emergency equipment area outside of office	250 sheets
Pigtail absorbents	Emergency equipment areas - Outside of office area and warehouse foyer area	6 rolls

APPENDIX G
EMERGENCY INFORMATION

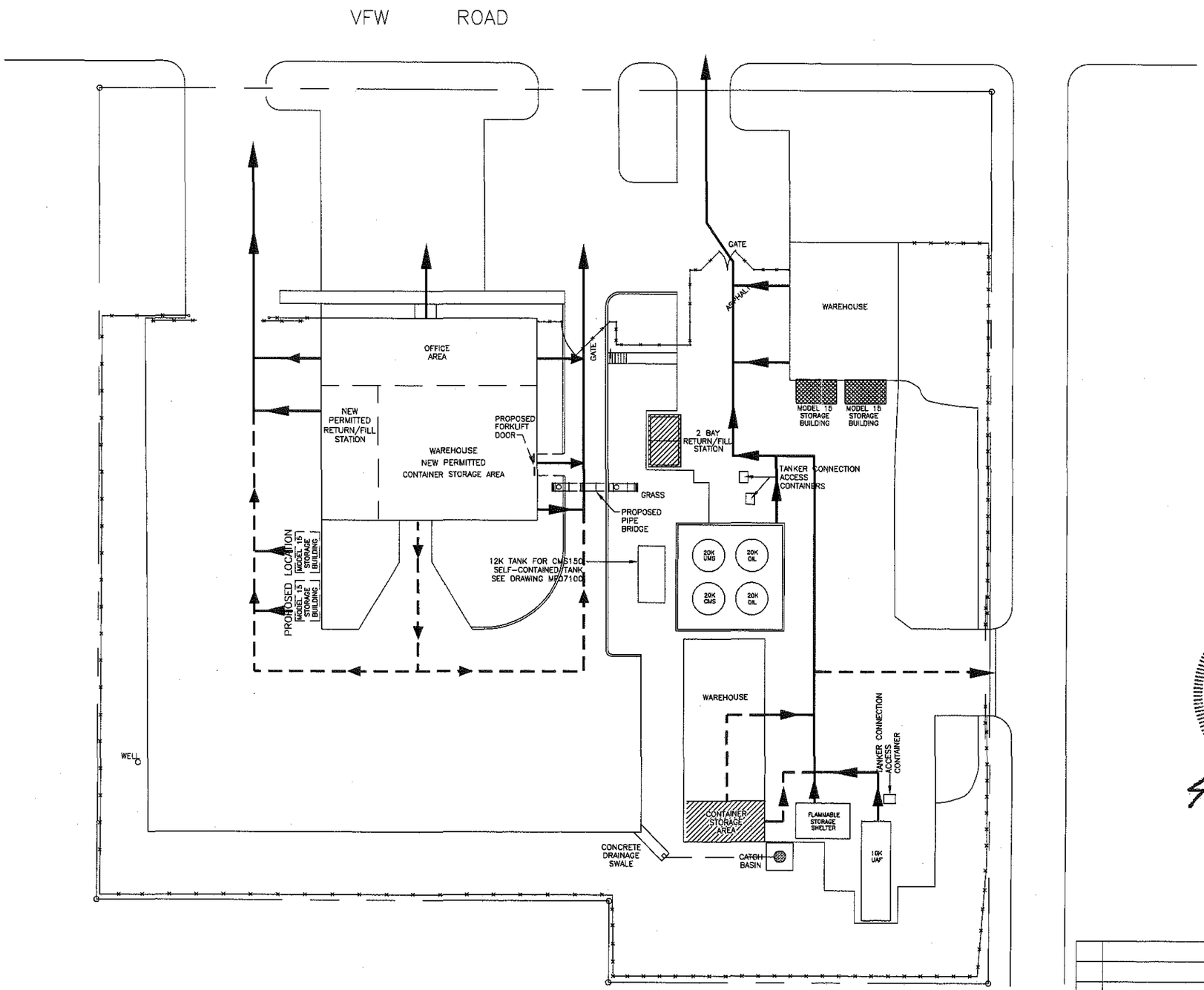

SITE PLAN

LEGEND:

PRIMARY ROUTE

SECONDARY ROUTE

UNIT TO BE CLOSED

UNIT TO BE MOVED

PROPOSED FUTURE EQUIPMENT LOCATION

A TriHydro Corporation representative conducted an on-site field inspection to verify, equipment, components, dimensions and existing conditions on April 10, 2003. Items inaccessible to visual observations were not field verified during this inspection. Revisions to these drawings (based on the inspection) were coordinated through the Safety-Kleen Engineering Department, as necessary.

TriHydro Corporation

Engineering and Environmental Consulting
920 Sheridan Street
Laramie, Wyoming 82070

LICENSED PROFESSIONAL ENGINEER
JACK G. BEDESSEM
062-048091
STATE OF ILLINOIS

signature

4/28/03
date

GENERAL NOTES

PROPRIETARY STATEMENT

THIS DRAWING IS THE EXCLUSIVE PROPERTY OF SAFETY-KLEEN CORP. AND IS PROPRIETARY AND CONFIDENTIAL INFORMATION. THIS DRAWING AND THE INFORMATION CONTAINED THEREIN MUST NOT BE DUPLICATED, USED, DIVULGED, REPRODUCED, COPIED, DISCLOSED OR APPROPRIATED IN WHOLE OR IN PART FOR ANY PURPOSE OTHER THAN AS EXPRESSLY AUTHORIZED BY SAFETY-KLEEN CORP. THIS DRAWING MUST BE RETURNED PROMPTLY UPON REQUEST.

Project Solutions Companies
1390 Boone Industrial Drive • Suite 200 • Columbia • MO 65202
• Phone: (573) 443-7100 • Fax: (573) 443-7181 •

FIGURE G-1

TITLE
SITE EMERGENCY EVACUATION PLAN

SAFETY-KLEEN CORP.
1000 N. RANDALL ROAD ELGIN, ILLINOIS 60123 PHONE 708-697-8460

NO.	DESCRIPTION	BY	CHK	APPR	DATE
A	REVISED FOR PART B	JEK	KLS	KLS	021203

REVISIONS

SCALE	BY	CHKD	APPROVED	OPERATIONS	DATE
AS SHOWN	CWM	GPM			10-5-93

SERVICE CENTER LOCATION	SC-DWG. NO.-REV. NO.	SHEET NO.
PEKIN, IL.	513601-0011	A

10-5-93 9:39 am 0011B-00.DWG 9341.20

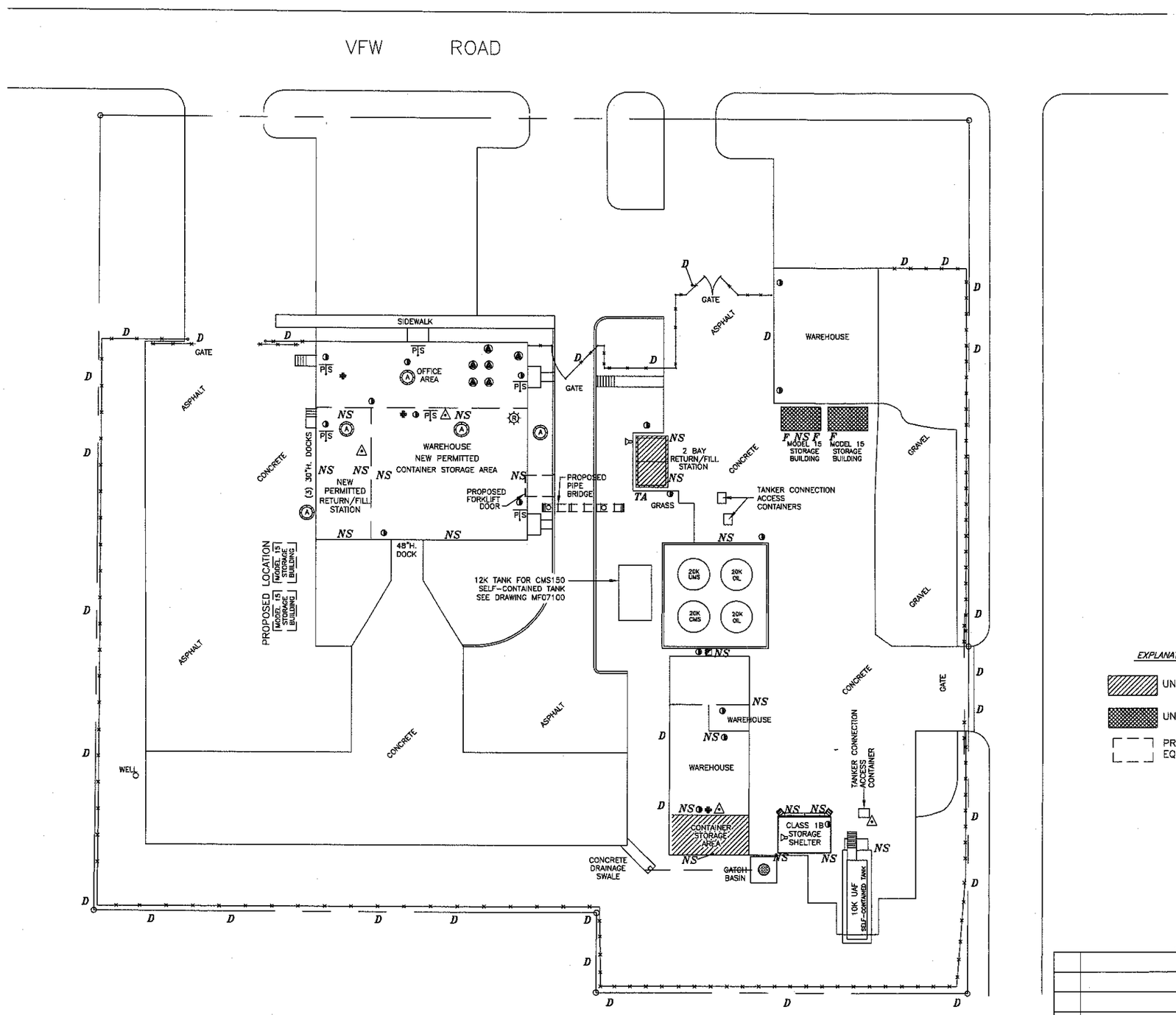

SITE PLAN

LICENSED PROFESSIONAL ENGINEER
JACK G. BEDESSEM
062-049[illegible]
STATE OF ILLINOIS

signature

4/28/03
date

LEGEND:

- DRY CHEMICAL FIRE EXTINGUISHER – HAND HELD TYPE (ABC)
- FIRST-AID KIT
- EYEWASH ONLY OR HANDSPRAY
- SPILL BOX
- TELEPHONE W/INTERCOM
- ALERT (HORN)
- FIRE ALARM
- HLA — HIGH LEVEL ALARM
- P — PANIC BUTTON
- D — DANGER/NO TRESPASS/AUTHORIZED PERSONNEL ONLY SIGN
- NS — NO SMOKING
- TA — TANK ALERTS AND ALARMS
- F — FLAMMABLE/COMBUSTIBLE SIGN
- SPRINKLER RISER
- PULL STATION

EXPLANATION

- UNIT TO BE CLOSED
- UNIT TO BE MOVED
- PROPOSED FUTURE EQUIPMENT LOCATION

A TriHydro Corporation representative conducted an on-site field inspection to verify, equipment, components, dimensions and existing conditions on April 10, 2003. Items inaccessible to visual observations were not field verified during this inspection. Revisions to these drawings (based on the inspection) were coordinated through the Safety-Kleen Engineering Department, as necessary.

TriHydro Corporation
Engineering and Environmental Consulting
920 Sheridan Street
Laramie, Wyoming 82070

GENERAL NOTES

1. EMERGENCY EQUIPMENT AS INDICATED WAS FIELD VERIFIED 3-11-93 AND 5-27-93.

PROPRIETARY STATEMENT

THIS DRAWING IS THE EXCLUSIVE PROPERTY OF SAFETY-KLEEN CORP. AND IS PROPRIETARY AND CONFIDENTIAL INFORMATION. THIS DRAWING AND THE INFORMATION CONTAINED THEREIN MUST NOT BE DUPLICATED, USED, DIVULGED, REPRODUCED, COPIED, DISCLOSED OR APPROPRIATED IN WHOLE OR IN PART FOR ANY PURPOSE OTHER THAN AS EXPRESSLY AUTHORIZED BY SAFETY-KLEEN CORP. THIS DRAWING MUST BE RETURNED PROMPTLY UPON REQUEST.

Project Solutions Companies

FIGURE G-2

1360 Boone Industrial Drive • Suite 200 • Columbia • MO 65202
• Phone: (573) 443-7100 • Fax: (573) 443-7181 •

NO.	DESCRIPTION	BY	CHK	APPR	DATE
C	REVISED FOR PART B	JEK	KLS	KLS	021703
B	UPDATE SITE PER NEW OFFICE/WAREHOUSE	CWM	GPM		100593
A	UPDATE TEL/INTERCOM LOCATION	GT			051592

REVISIONS

TITLE
EMERGENCY EQUIPMENT PLAN

SAFETY-KLEEN CORP.
1000 N. RANDALL ROAD ELGIN, ILLINOIS 60123 PHONE 708-697-8460

SCALE	BY	CHKD	APPROVED	OPERATIONS	DATE
1" = 20'-0"	R.D.	–	–	–	10/4/91

SERVICE CENTER LOCATION	SC-DWG. NO.-REV. NO.	SHEET NO.
PEKIN, IL.	513601-0008	C

10-5-93 3:12 , J0088-02 .DWG 9341.20

Exhibit G-1
Material Safety Data Sheets

SAFETY-KLEEN 105 SOLVENT RECYCLED

MATERIAL SAFETY DATA SHEET FOR USA AND CANADA

SECTION 1: PRODUCT AND COMPANY IDENTIFICATION

PRODUCT NAME: **SAFETY-KLEEN 105 SOLVENT RECYCLED**

SYNONYMS: Parts Washer Solvent; Petroleum Distillates; Petroleum Naptha; Naptha, Solvent; Stoddard Solvent; Mineral Spirits.

PRODUCT PART NUMBERS: 6614, 6617, 1011662, 1014662.

PRODUCT USE: Cleaning and degreasing metal parts.
If this product is used in combination with other products, refer to the Material Safety Data Sheets for those products.

24-HOUR EMERGENCY PHONE NUMBERS

These numbers are for emergency use only. If you desire non-emergency product information, please call a phone number listed below.

MEDICAL:	**TRANSPORTATION (SPILL):**
1-800-752-7869	**1-800-468-1760**

SUPPLIER: Safety-Kleen Systems, Inc.
5400 Legacy Drive
Cluster II, Building 3
Plano, Texas 75024
USA
1-800-669-5740

TECHNICAL INFORMATION: 1-800-669-5740, Press 1 then Extension 7500

MSDS FORM NUMBER: 82310 **ISSUE:** November 27, 2002

ORIGINAL ISSUE: April 8, 1976 **SUPERSEDES:** March 24, 2000

PREPARED BY: Product MSDS Coordinator **APPROVED BY:** MSDS Task Force

SECTION 2: COMPOSITION/INFORMATION ON INGREDIENTS

				OSHA PEL		ACGIH TLV®			
WT%	NAME	SYNONYM	CAS NO.	TWA	STEL	TWA	STEL	LD	LC
99 to 100	Distillates (petroleum), hydrotreated light[e]	N.Av.	64742-47-8	500[d] ppm	N.Av.	100[d] ppm	N.Av.	>5000[g,c]	>5500[d,h] mg/m^3/4 hours
0 to 0.2*	Tetrachloroethene	Perchloroethylene; Tetrachloroethylene	127-18-4	100 ppm	200 ppm (ceiling)	25 ppm	100 ppm	2629[a,f]	34200[b] mg/m^3/8 hours

N.Av. = Not Available
*Even though the concentration range does not fall under the ranges prescribed by WHMIS, this is the actual range which varies with each batch of the product.
[a]Oral-Rat LD_{50} (mg/kg)

[b]Inhalation-Rat LC_{50}
[c]Based on Stoddard solvent: Skin-Rabbit LD_{50} >3000 mg/kg
[d]Based on Stoddard Solvent.

[e]Based on Stoddard Solvent, NIOSH IDLH (Immediately Dangerous to Life or Health): 20000 mg/m^3 (5000 ppm)
[f]Skin-Rabbit LD_{50} >10000 mg/kg
[g]Oral-Rat LD (mg/kg)
[h]Inhalation-Rat LC

SECTION 3: HAZARDS IDENTIFICATION

EMERGENCY OVERVIEW

APPEARANCE
Liquid, clear and green, mild hydrocarbon odor.

WARNING!

PHYSICAL HAZARD
Combustible liquid and vapor.

HEALTH HAZARDS
May be harmful if inhaled.
May irritate eyes and skin.
May be harmful if swallowed.
Suspect cancer hazard. Contains material (less than 0.3 WT%) which may cause cancer. Risk of cancer depends on duration and level of exposure.
Contains material which may cause birth defects.
Contains material which may cause central nervous system damage.

ENVIRONMENTAL HAZARDS
Toxic to aquatic life.

POTENTIAL HEALTH EFFECTS

INHALATION (BREATHING): High concentrations of vapor or mist may be harmful if inhaled. High concentrations of vapor or mist may irritate the respiratory tract (nose, throat, and lungs). High concentrations of vapor or mist may cause nausea, vomiting, headaches, dizziness, loss of coordination, numbness, and other central nervous system effects. Massive acute overexposure may cause rapid central nervous system depression, sudden collapse, coma, and/or death.

EYES: May cause irritation with watering, stinging, and/or redness.

SKIN: May cause irritation. Not likely to be absorbed through the skin in harmful amounts.

INGESTION (SWALLOWING): May be harmful if swallowed. May cause throat irritation, nausea, vomiting, and central nervous system effects as noted under **INHALATION (BREATHING)**. Breathing product into the lungs during ingestion or vomiting may cause lung injury and possible death.

MEDICAL CONDITIONS AGGRAVATED BY EXPOSURE: Individuals with pre-existing respiratory tract (nose, throat, and lungs), central nervous system, eye, and/or skin disorders may have increased susceptibility to the effects of exposure.

CHRONIC: Prolonged or repeated inhalation may cause toxic effects as noted under **INHALATION (BREATHING)**. Prolonged or repeated inhalation and/or ingestion has been suggested to produce kidney toxicity in dogs but in no other species, including humans. According to one unsubstantiated human case report, prolonged or repeated inhalation, skin contact, and/or ingestion may cause mild, acute chemical hepatitis and acute, yellow atrophy (size reduction) of the liver. Prolonged or repeated eye contact may cause inflammation of the membrane lining the eyelids and covering the eyeball (conjunctivitis). Prolonged or repeated skin contact may cause drying, cracking, redness, itching, and/or swelling (dermatitis); and/or burns.

CANCER INFORMATION: This product contains perchloroethylene which may cause cancer. Risk of cancer depends on duration and level of exposure. For more information, see **SECTION 11: CARCINOGENICITY**.

Also see **SECTION 15: CALIFORNIA**.

POTENTIAL ENVIRONMENTAL EFFECTS

Product is toxic to aquatic life. Also see **SECTION 12: ECOLOGICAL INFORMATION**.

SECTION 4: FIRST AID MEASURES

INHALATION: (BREATHING) Remove to fresh air. If not breathing, give artificial respiration. If breathing is difficult, give oxygen. Oxygen should only be administered by qualified personnel. Someone should stay with victim. Get medical attention if breathing difficulty persists.

EYES: If irritation or redness from exposure to vapor develops, move away from exposure into fresh air. Upon contact, immediately flush eyes with plenty of lukewarm water, holding eyelids apart, for 15 minutes. Get medical attention.

SKIN: Remove affected clothing and shoes. Wash skin thoroughly with soap and water. Get medical attention if irritation or pain develops or persists.

INGESTION: (SWALLOWING) Do NOT induce vomiting. Immediately get medical attention. Call 1-800-752-7869 for additional information.
If spontaneous vomiting occurs, keep head below hips to avoid breathing the product into the lungs. Never give anything to an unconscious person by mouth.

NOTE TO PHYSICIANS: Treat symptomatically and supportively. Administration of gastric lavage, if warranted, should be performed by qualified medical personnel. Treatment may vary with condition of victim and specifics of incident. Call 1-800-752-7869 for additional information.

SECTION 5: FIRE FIGHTING MEASURES

FLASH POINT: 105°F (40°C) (minimum) Tag Closed Cup

FLAMMABLE LIMITS IN AIR: **LOWER:** 0.7 VOL% (minimum)
UPPER: 5 VOL% (maximum)

AUTOIGNITION TEMPERATURE: 410°F (210°C) (minimum)

HAZARDOUS COMBUSTION PRODUCTS: Decomposition and combustion materials may be toxic. Burning may produce carbon monoxide and unidentified organic compounds.

CONDITIONS OF FLAMMABILITY: Heat, sparks, or flame.

EXTINGUISHING MEDIA: Carbon dioxide, regular foam, dry chemical, water spray, or water fog.

NFPA 704 HAZARD IDENTIFICATION:

This information is intended solely for the use by individuals trained in this system.

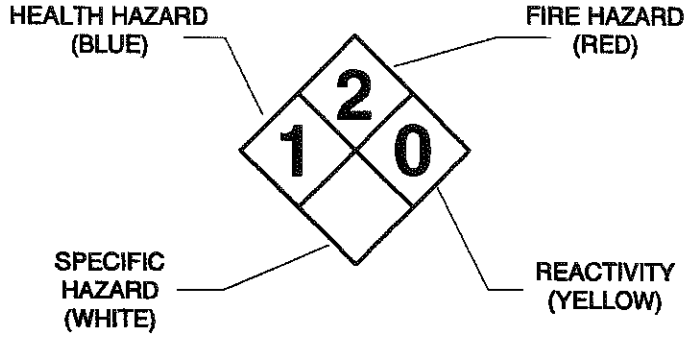

FIRE FIGHTING INSTRUCTIONS:

Keep storage containers cool with water spray. A positive-pressure, self-contained breathing apparatus (SCBA) and full-body protective equipment are required for fire emergencies.

FIRE AND EXPLOSION HAZARDS:

Vapor explosion hazard indoors, outdoors, or in sewers. Vapors may travel to ignition source and flashback. Vapors will spread along the ground and collect in low or confined areas. Run-off to sewer may create a fire hazard. Heated containers may rupture. "Empty" containers may retain residue and can be dangerous. Not sensitive to mechanical impact. Product may be sensitive to static discharge, which could result in fire or explosion.

SECTION 6: ACCIDENTAL RELEASE MEASURES

Remove all ignition sources. Do not touch or walk through spilled product. Stop leak if you can do it without risk. Wear protective equipment and provide engineering controls as specified in **SECTION 8: EXPOSURE CONTROLS/PERSONAL PROTECTION**. Isolate hazard area. Keep unnecessary and unprotected personnel from entering. Ventilate area and avoid breathing vapor or mist. A vapor suppressing foam may be used to reduce vapors. Contain spill away from surface waters and sewers. Contain spill as a liquid for possible recovery or sorb with compatible sorbent material and shovel with a clean, sparkproof tool into a sealable container for disposal.

Additionally, for large spills: Water spray may reduce vapor, but may not prevent ignition in closed spaces. Dike far ahead of liquid spill for collection and later disposal.

There may be specific federal regulatory reporting requirements associated with spills, leaks, or releases of this product. Also see **SECTION 15: REGULATORY INFORMATION.**

SECTION 7: HANDLING AND STORAGE

HANDLING: Keep away from heat, sparks, or flame. Where flammable mixtures may be present, equipment safe for such locations should be used. Use clean, sparkproof tools and explosion-proof equipment. When transferring product, metal containers, including trucks and tank cars, should be grounded and bonded. Do not breathe vapor or mist. Use in a well ventilated area. Avoid contact with eyes, skin, clothing, and shoes. Do not smoke while using this product.

SHIPPING AND STORING: Keep container tightly closed when not in use and during transport. Do not pressurize, cut, weld, braze, solder, drill, or grind containers. Keep containers away from heat, flame, sparks, static electricity, or other sources of ignition. Empty product containers may retain product residue and can be dangerous. See **SECTION 14: TRANSPORT INFORMATION** for Packing Group information.

SECTION 8: EXPOSURE CONTROLS/PERSONAL PROTECTION

ENGINEERING CONTROLS: Provide general ventilation needed to maintain concentration of vapor or mist below applicable exposure limits. Where adequate general ventilation is unavailable, use process enclosures, local exhaust ventilation, or other engineering controls to control airborne levels below recommended exposure limits. Where explosive mixtures may be present, equipment safe for such locations should be used.

PERSONAL PROTECTIVE EQUIPMENT

RESPIRATORY PROTECTION: Use NIOSH-certified, air-purifying respirators with organic vapor cartridges respiratory protective equipment when concentration of vapor or mist exceeds applicable exposure limits. Protection provided by air-purifying respirators is limited. Selection and use of respiratory protective equipment should be in accordance in the USA with OSHA General Industry Standard 29 CFR 1910.134; or in Canada with CSA Standard Z94.4.

EYE PROTECTION: Where eye contact is likely, wear chemical goggles; contact lens use is not recommended.

SKIN PROTECTION: Where skin contact is likely, wear nitrile, supported neoprene, Viton®, polyvinyl alcohol (PVA), laminate (such as North Silver Shield®, Safety 4 4h®, Ansell Edmont Barrier®), or equivalent protective gloves; use of polyvinyl chloride (PVC), natural rubber (latex), or equivalent gloves is not recommended.

To avoid prolonged or repeated contact where spills and splashes are likely, wear appropriate chemical-resistant faceshield, boots, apron, whole body suits, or other protective clothing.

PERSONAL HYGIENE: Use good personal hygiene. Wash thoroughly with soap and water after handling product and before eating, drinking, or using tobacco products. Clean affected clothing, shoes, and protective equipment before reuse. Discard affected clothing, shoes, or protective equipment if they cannot be thoroughly cleaned. Discard leather articles, such as shoes, saturated with the product.

OTHER PROTECTIVE EQUIPMENT: Where spills and splashes are likely, facilities storing or using this product should be equipped with an emergency eyewash and shower, both equipped with clean water, in the immediate work area.

SECTION 9: PHYSICAL AND CHEMICAL PROPERTIES

PHYSICAL STATE, APPEARANCE, AND ODOR: Liquid, clear and green, mild hydrocarbon odor.

ODOR THRESHOLD: 30 ppm (based on Stoddard Solvent)

MOLECULAR WEIGHT: Not available.

SPECIFIC GRAVITY: 0.77 to 0.80 at 60°F/60°F (15.6°C/15.6°C) (water = 1)

DENSITY: 6.4 to 6.7 LB/US gal (770 to 800 g/l)

VAPOR DENSITY: 5 (air = 1) (approximately)

VAPOR PRESSURE: 0.4 mm Hg at 68°F (20°C) (approximately)
1.0 mm Hg at 100°F (38°C) (approximately)

BOILING POINT: 310°F (155°C) (initial)

FREEZING/MELTING POINT: -45°F (-43°C) (maximum)

pH: Not applicable.

EVAPORATION RATE: 0.1 (butyl acetate = 1) (based on Stoddard Solvent)

SOLUBILITY IN WATER: Insoluble.

FLASH POINT: 105°F (40°C) (minimum) Tag Closed Cup

FLAMMABLE LIMITS IN AIR: **LOWER:** 0.7 VOL% (minimum)
UPPER: 5 VOL% (maximum)

AUTOIGNITION TEMPERATURE: 410°F (210°C) (minimum)

SECTION 10: STABILITY AND REACTIVITY

STABILITY: Stable under normal temperatures and pressures. Avoid heat, sparks, or flame.

INCOMPATIBILITY: Avoid acids, alkalies, oxidizing agents, reducing agents, reactive halogens, or reactive metals.

REACTIVITY: Polymerization is not known to occur under normal temperatures and pressures. Not reactive with water.

HAZARDOUS DECOMPOSITION PRODUCTS: None under normal temperatures and pressures. See also **SECTION 5: HAZARDOUS COMBUSTION PRODUCTS**.

SECTION 11: TOXICOLOGICAL INFORMATION

SENSITIZATION: Based on best current information, there is no known human sensitization associated with this product.

MUTAGENICITY: Perchloroethylene has demonstrated animal effects of mutagenicity.

Based on best current information, the other component listed in **SECTION 2** is not a mutagen.

CARCINOGENICITY: Perchloroethylene is categorized by IARC as probably carcinogenic to humans (Group 2A). Perchloroethylene is listed by NTP as having limited evidence of carcinogenicity in humans or sufficient evidence of carcinogenicity in experimental animals.

Perchloroethylene is categorized by ACGIH as a confirmed animal carcinogen with unknown relevance to humans (A3). This agent is carcinogenic in experimental animals at a relatively high dose, by route(s) of administration, at site(s), of histologic type(s), or by mechanism(s) that may not be relevant to worker exposure. Available epidemiologic studies do not confirm an increased risk of cancer in exposed humans. Available evidence does not suggest that the agent is likely to cause cancer in humans except under uncommon or unlikely routes or levels of exposure.

Based on best current information, the other component listed in **SECTION 2** is not a carcinogen.

Also see **SECTION 3: CANCER INFORMATION** and **SECTION 15: CALIFORNIA.**

REPRODUCTIVE TOXICITY: Based on best current information, there is no known reproductive toxicity associated with this product.

Also see **SECTION 15: CALIFORNIA.**

TERATOGENICITY: Perchloroethylene has demonstrated animal effects of teratogenicity.

Based on best current information, the other component listed in **SECTION 2** is not a teratogen.

TOXICOLOGICALLY SYNERGISTIC PRODUCT(S): Based on best current information, there are no known toxicologically synergistic products associated with this product.

SECTION 12: ECOLOGICAL INFORMATION

ECOTOXICITY: 2900 ug/L 96 hour LC_{50} Rainbow trout, donaldson trout (Oncorhynchus mykiss) (based on Distillates (petroleum) hydrotreated light).

OCTANOL/WATER PARTITION COEFFICIENT: Not available.

VOLATILE ORGANIC COMPOUNDS: 100 WT%; 6.4 to 6.7 LB/US gal; 770 to 800 g/l
As per 40 CFR Part 51.100(s).

SECTION 13: DISPOSAL CONSIDERATIONS

DISPOSAL: Dispose in accordance with federal, state, provincial, and local regulations. Regulations may also apply to empty containers. The responsibility for proper waste disposal lies with the owner of the waste. Contact Safety-Kleen regarding recycling or proper disposal.

USEPA WASTE CODE(S): D001, D018, D039, and D040
Based on available data, this information applies to the product as supplied to the user. Processing, use, or contamination by the user may change the waste code(s) applicable to the disposal of this product.

SECTION 14: TRANSPORT INFORMATION

DOT:	COMBUSTIBLE LIQUID, N.O.S. (PETROLEUM NAPHTHA), NA1993, PG III
TDG:	Petroleum Distillates, N.O.S., Class 3, UN1268, PG III
EMERGENCY RESPONSE GUIDE NUMBER:	128 Reference *North American Emergency Response Guidebook*

SECTION 15: REGULATORY INFORMATION

USA REGULATIONS

SARA SECTIONS 302 AND 304: Based on the ingredients listed in **SECTION 2**, this product does not contain any "extremely hazardous substances" listed pursuant to Title III of the Superfund Amendments and Reauthorization Act of 1986 (SARA) Section 302 or Section 304 as identified in 40 CFR Part 355, Appendix A and B.

SARA SECTIONS 311 AND 312: This product poses the following physical and health hazards as defined in 40 CFR Part 370 and is subject to the requirements of sections 311 and 312 of Title III of the Superfund Amendments and Reauthorization Act of 1986 (SARA):

Immediate (Acute) Health Hazard
Delayed (Chronic) Health Hazard
Fire Hazard

SARA SECTION 313: The following component is subject to the requirements of section 313 of Title III of the Superfund Amendments and Reauthorization Act of 1986 (SARA) and 40 CFR Part 372.

Material	CAS
Perchloroethylene	127-18-4

CERCLA: Based on the ingredients listed in **SECTION 2**, this product contains the following "hazardous substance" listed under the Comprehensive Environmental Response, Compensation and Liability Act of 1980 (CERCLA) in 40 CFR Part 302, Table 302.4 with the following reportable quantity (RQ):

Material	CAS	RQ
Perchloroethylene	127-18-4	100 LB (15.4 kg)

TSCA: All the components of this product are listed on the TSCA Inventory.

CALIFORNIA: This product may contain detectable amounts of benzene CAS 71-43-2, p-dichlorobenzene CAS 106-46-7, methylene chloride CAS 75-09-2, perchloroethylene CAS 127-18-4, and trichloroethylene CAS 79-01-6. WARNING: These chemicals are known to the State of California to cause cancer.

This product may contain detectable amounts of benzene CAS 71-43-2 and toluene CAS 108-88-3. WARNING: These chemicals are known to the State of California to cause birth defects or other reproductive harm.

CANADIAN REGULATIONS

This product has been classified in accordance with the hazard criteria of the Controlled Products Regulations (CPR) and the MSDS contains all the information required by the CPR.

WHMIS: B3, D2A, D2B

CANADIAN ENVIRONMENTAL PROTECTION ACT (CEPA): All the components of this product are listed on the Canadian Domestic Substances List (DSL).

SECTION 16: OTHER INFORMATION

REVISION INFORMATION: Updated with Safety-Kleen Texas address, modified Medical Emergency phone number, modification to Transportation Spill number, and modification of Technical Information phone number.

LABEL/OTHER INFORMATION: This product is United States Department of Agriculture (USDA) approved, Underwriter's Laboratories (UL) classified, and Factory Mutual (FM) approved.

User assumes all risks incident to the use of this product. To the best of our knowledge, the information contained herein is accurate. However, Safety-Kleen assumes no liability whatsoever for the accuracy or completeness of the information contained herein. No representations or warranties, either express or implied, or merchantability, fitness for a particular purpose or of any other nature are made hereunder with respect to information or the product to which information refers. The data contained on this sheet apply to the product as supplied to the user.

©2000 Printed in the USA.

SAFETY-KLEEN PREMIUM SOLVENT
SAFETY-KLEEN PREMIUM GOLD SOLVENT

MATERIAL SAFETY DATA SHEET FOR USA AND CANADA

SECTION 1: PRODUCT AND COMPANY IDENTIFICATION

PRODUCT NAME: **SAFETY-KLEEN PREMIUM SOLVENT**
SAFETY-KLEEN PREMIUM GOLD SOLVENT

SYNONYMS: Parts Washer Solvent; Petroleum Distillates; Petroleum Naptha; Naptha, Solvent; Stoddard Solvent; Mineral Spirits.

PRODUCT PART NUMBERS: 6605, 6638.

PRODUCT USE: Cleaning and degreasing metal parts.
If these products are used in combination with other products, refer to the Material Safety Data Sheets for those products.

	24-HOUR EMERGENCY PHONE NUMBERS	
These numbers are for emergency use only. If you desire non-emergency product information, please call a phone number listed below.	**MEDICAL:**	**TRANSPORTATION (SPILL):**
	1-800-752-7869	**1-800-468-1760**

SUPPLIER: Safety-Kleen Corp.
5400 Legacy Drive
Cluster II, Building 3
Plano, Texas 75024
USA
1-800-669-5740

TECHNICAL INFORMATION: 1-800-669-5740, Press 1 then Extension 7500

MSDS FORM NUMBER: 82658 (Also formerly known as 82529)

ISSUE: December 12, 2002

ORIGINAL ISSUE: January 26, 1995 (Also formerly January 7, 1993)

SUPERSEDES: March 24, 2000

PREPARED BY: Product MSDS Coordinator

APPROVED BY: MSDS Task Force

SECTION 2: COMPOSITION/INFORMATION ON INGREDIENTS

				OSHA PEL		ACGIH TLV®			
WT%	NAME	SYNONYM	CAS NO.	TWA	STEL	TWA	STEL	LD[a]	LC[b]
100	Distillates (petroleum), hydrotreated light[e]	N.Av.	64742-47-8	500[d] ppm	N.Av.	100[d] ppm	N.Av.	>5000[c]	>5500[d] mg/m^3/4 hours

N.Av. = Not Available
[a]Oral-Rat LD (mg/kg)
[b]Inhalation-Rat LC
[c]Based on Stoddard solvent: Skin-Rabbit LD_{50} >3000 mg/kg
[d]Based on Stoddard Solvent.
[e]Based on Stoddard Solvent, NIOSH IDLH (Immediately Dangerous to Life or Health): 20000 mg/m^3 (5000 ppm)

SECTION 3: HAZARDS IDENTIFICATION

EMERGENCY OVERVIEW

APPEARANCE
Liquid, clear, colorless to pale yellow, mild hydrocarbon odor.

WARNING!

PHYSICAL HAZARD
Combustible liquid and vapor.

HEALTH HAZARDS
May be harmful if inhaled.
May irritate eyes and skin.
May be harmful if swallowed.
Contains material which may cause central nervous system damage.

ENVIRONMENTAL HAZARDS
Not toxic to aquatic life.

POTENTIAL HEALTH EFFECTS

INHALATION (BREATHING): High concentrations of vapor or mist may be harmful if inhaled. High concentrations of vapor or mist may irritate the respiratory tract (nose, throat, and lungs). High concentrations of vapor or mist may cause nausea, vomiting, headaches, dizziness, loss of coordination, numbness, and other central nervous system effects. Massive acute overexposure may cause rapid central nervous system depression, sudden collapse, coma, and/or death.

EYES: May cause irritation with watering, stinging, and/or redness.

SKIN: May cause irritation. Not likely to be absorbed through the skin in harmful amounts.

INGESTION (SWALLOWING): May be harmful if swallowed. May cause throat irritation, nausea, vomiting, and central nervous system effects as noted under **INHALATION (BREATHING)**. Breathing product into the lungs during ingestion or vomiting may cause lung injury and possible death.

MEDICAL CONDITIONS AGGRAVATED BY EXPOSURE: Individuals with pre-existing respiratory tract (nose, throat, and lungs), central nervous system, eye, and/or skin disorders may have increased susceptibility to the effects of exposure.

CHRONIC: Prolonged or repeated inhalation may cause toxic effects as noted under **INHALATION (BREATHING)**. Prolonged or repeated inhalation and/or ingestion has been suggested to produce kidney toxicity in dogs but in no other species, including humans. According to one unsubstantiated human case report, prolonged or repeated inhalation, skin contact, and/or ingestion may cause mild, acute chemical hepatitis and acute, yellow atrophy (size reduction) of the liver. Prolonged or repeated eye contact may cause inflammation of the membrane lining the eyelids and covering the eyeball (conjunctivitis). Prolonged or repeated skin contact may cause drying, cracking, redness, itching, and/or swelling (dermatitis); and/or burns.

CANCER INFORMATION: No known carcinogenicity. For more information, see **SECTION 11: CARCINOGENICITY**.

Also see **SECTION 15: CALIFORNIA**.

POTENTIAL ENVIRONMENTAL EFFECTS
Product is not toxic to aquatic life. Also see **SECTION 12: ECOLOGICAL INFORMATION**.

SECTION 4: FIRST AID MEASURES

INHALATION: (BREATHING) Remove to fresh air. If not breathing, give artificial respiration. If breathing is difficult, give oxygen. Oxygen should only be administered by qualified personnel. Someone should stay with victim. Get medical attention if breathing difficulty persists.

EYES: If irritation or redness from exposure to vapor develops, move away from exposure into fresh air. Upon contact, immediately flush eyes with plenty of lukewarm water, holding eyelids apart, for 15 minutes. Get medical attention.

SKIN: Remove affected clothing and shoes. Wash skin thoroughly with soap and water. Get medical attention if irritation or pain develops or persists.

INGESTION: (SWALLOWING) Do NOT induce vomiting. Immediately get medical attention. Call 1-800-752-7869 for additional information.
If spontaneous vomiting occurs, keep head below hips to avoid breathing the product into the lungs. Never give anything to an unconscious person by mouth.

NOTE TO PHYSICIANS: Treat symptomatically and supportively. Administration of gastric lavage, if warranted, should be performed by qualified medical personnel. Treatment may vary with condition of victim and specifics of incident. Call 1-800-752-7869 for additional information.

SECTION 5: FIRE FIGHTING MEASURES

FLASH POINT: 148°F (64°C) (approximately) Tag Closed Cup

FLAMMABLE LIMITS IN AIR: **LOWER:** 0.7 VOL% (minimum)
UPPER: 5 VOL% (maximum)

AUTOIGNITION TEMPERATURE: 410°F (210°C) (minimum)

HAZARDOUS COMBUSTION PRODUCTS: Decomposition and combustion materials may be toxic. Burning may produce carbon monoxide and unidentified organic compounds.

CONDITIONS OF FLAMMABILITY: Heat, sparks, or flame.

EXTINGUISHING MEDIA: Carbon dioxide, regular foam, dry chemical, water spray, or water fog.

NFPA 704 HAZARD IDENTIFICATION: This information is intended solely for the use by individuals trained in this system.

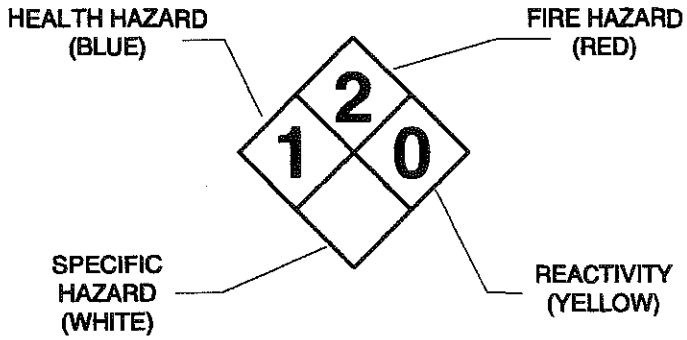

FIRE FIGHTING INSTRUCTIONS:	Keep storage containers cool with water spray. A positive-pressure, self-contained breathing apparatus (SCBA) and full-body protective equipment are required for fire emergencies.
FIRE AND EXPLOSION HAZARDS:	Vapor explosion hazard indoors, outdoors, or in sewers. Vapors may travel to ignition source and flashback. Vapors will spread along the ground and collect in low or confined areas. Run-off to sewer may create a fire hazard. Heated containers may rupture. "Empty" containers may retain residue and can be dangerous. Not sensitive to mechanical impact. Product may be sensitive to static discharge, which could result in fire or explosion.

SECTION 6: ACCIDENTAL RELEASE MEASURES

Remove all ignition sources. Do not touch or walk through spilled product. Stop leak if you can do it without risk. Wear protective equipment and provide engineering controls as specified in **SECTION 8: EXPOSURE CONTROLS/PERSONAL PROTECTION**. Isolate hazard area. Keep unnecessary and unprotected personnel from entering. Ventilate area and avoid breathing vapor or mist. A vapor suppressing foam may be used to reduce vapors. Contain spill away from surface waters and sewers. Contain spill as a liquid for possible recovery or sorb with compatible sorbent material and shovel with a clean, sparkproof tool into a sealable container for disposal.

Additionally, for large spills: Water spray may reduce vapor, but may not prevent ignition in closed spaces. Dike far ahead of liquid spill for collection and later disposal.

SECTION 7: HANDLING AND STORAGE

HANDLING:	Keep away from heat, sparks, or flame. Where flammable mixtures may be present, equipment safe for such locations should be used. Use clean, sparkproof tools and explosion-proof equipment. When transferring product, metal containers, including trucks and tank cars, should be grounded and bonded. Do not breathe vapor or mist. Use in a well ventilated area. Avoid contact with eyes, skin, clothing, and shoes. Do not smoke while using these products.
SHIPPING AND STORING:	Keep container tightly closed when not in use and during transport. Do not pressurize, cut, weld, braze, solder, drill, or grind containers. Keep containers away from heat, flame, sparks, static electricity, or other sources of ignition. Empty product containers may retain product residue and can be dangerous. See **SECTION 14: TRANSPORT INFORMATION** for Packing Group information.

SECTION 8: EXPOSURE CONTROLS/PERSONAL PROTECTION

ENGINEERING CONTROLS: Provide general ventilation needed to maintain concentration of vapor or mist below applicable exposure limits. Where adequate general ventilation is unavailable, use process enclosures, local exhaust ventilation, or other engineering controls to control airborne levels below recommended exposure limits. Where explosive mixtures may be present, equipment safe for such locations should be used.

PERSONAL PROTECTIVE EQUIPMENT

RESPIRATORY PROTECTION: Use NIOSH-certified, air-purifying respirators with organic vapor cartridges respiratory protective equipment when concentration of vapor or mist exceeds applicable exposure limits. Protection provided by air-purifying respirators is limited. Selection and use of respiratory protective equipment should be in accordance in the USA with OSHA General Industry Standard 29 CFR 1910.134; or in Canada with CSA Standard Z94.4.

EYE PROTECTION: Where eye contact is likely, wear chemical goggles; contact lens use is not recommended.

SKIN PROTECTION: Where skin contact is likely, wear nitrile, supported neoprene, Viton®, polyvinyl alcohol (PVA), laminate (such as North Silver Shield®, Safety 4 4h®, Ansell Edmont Barrier®), or equivalent protective gloves; use of polyvinyl chloride (PVC), natural rubber (latex), or equivalent gloves is not recommended.

To avoid prolonged or repeated contact where spills and splashes are likely, wear appropriate chemical-resistant faceshield, boots, apron, whole body suits, or other protective clothing.

PERSONAL HYGIENE: Use good personal hygiene. Wash thoroughly with soap and water after handling product and before eating, drinking, or using tobacco products. Clean affected clothing, shoes, and protective equipment before reuse. Discard affected clothing, shoes, or protective equipment if they cannot be thoroughly cleaned. Discard leather articles, such as shoes, saturated with the product.

OTHER PROTECTIVE EQUIPMENT: Where spills and splashes are likely, facilities storing or using this product should be equipped with an emergency eyewash and shower, both equipped with clean water, in the immediate work area.

SECTION 9: PHYSICAL AND CHEMICAL PROPERTIES

PHYSICAL STATE, APPEARANCE, AND ODOR:	Liquid, clear, colorless to pale yellow, mild hydrocarbon odor.
ODOR THRESHOLD:	30 ppm (based on Stoddard Solvent)
MOLECULAR WEIGHT:	Not available.
SPECIFIC GRAVITY:	0.78 to 0.82 at 60°F/60°F (15.6°C/15.6°C) (water = 1)
DENSITY:	6.5 to 6.8 LB/US gal (780 to 820 g/l)
VAPOR DENSITY:	5 (air = 1) (approximately)
VAPOR PRESSURE:	0.2 mm Hg at 68°F (20°C) (approximately) 0.6 mm Hg at 100°F (38°C) (approximately)
BOILING POINT:	350°F (177°C) (initial)
FREEZING/MELTING POINT:	-45°F (-43°C) (maximum)
pH:	Not applicable.
EVAPORATION RATE:	0.1 (butyl acetate = 1) (based on Stoddard Solvent)
SOLUBILITY IN WATER:	Insoluble.
FLASH POINT:	148°F (64°C) (approximately) Tag Closed Cup
FLAMMABLE LIMITS IN AIR:	**LOWER:** 0.7 VOL% (minimum) **UPPER:** 5 VOL% (maximum)
AUTOIGNITION TEMPERATURE:	410°F (210°C) (minimum)

SECTION 10: STABILITY AND REACTIVITY

STABILITY:	Stable under normal temperatures and pressures. Avoid heat, sparks, or flame.
INCOMPATIBILITY:	Avoid acids, alkalies, oxidizing agents, reducing agents, or reactive halogens.

OCTANOL/WATER PARTITION COEFFICIENT: Not available.

VOLATILE ORGANIC COMPOUNDS: 100 WT%; 6.5 to 6.8 LB/US gal; 780 to 820 g/l
As per 40 CFR Part 51.100(s).

SECTION 13: DISPOSAL CONSIDERATIONS

DISPOSAL: Dispose in accordance with federal, state, provincial, and local regulations. Regulations may also apply to empty containers. The responsibility for proper waste disposal lies with the owner of the waste. Contact Safety-Kleen regarding recycling or proper disposal.

USEPA WASTE CODE(S): Not regulated.
Based on available data, this information applies to the product as supplied to the user. Processing, use, or contamination by the user may change the waste code(s) applicable to the disposal of these products.

SECTION 14: TRANSPORT INFORMATION

DOT: COMBUSTIBLE LIQUID, N.O.S. (PETROLEUM NAPHTHA), NA1993, PG III

TDG: Not regulated.

EMERGENCY RESPONSE GUIDE NUMBER: 128
Reference *North American Emergency Response Guidebook*

SECTION 15: REGULATORY INFORMATION

USA REGULATIONS

SARA SECTIONS 302 AND 304: Based on the ingredient listed in **SECTION 2**, these products do not contain any "extremely hazardous substances" listed pursuant to Title III of the Superfund Amendments and Reauthorization Act of 1986 (SARA) Section 302 or Section 304 as identified in 40 CFR Part 355, Appendix A and B.

SARA SECTIONS 311 AND 312: These products pose the following physical and health hazards as defined in 40 CFR Part 370 and are subject to the requirements of sections 311 and 312 of Title III of the Superfund Amendments and Reauthorization Act of 1986 (SARA):
- Immediate (Acute) Health Hazard
- Delayed (Chronic) Health Hazard
- Fire Hazard

SARA SECTION These products do not contain toxic chemicals subject to the

REACTIVITY: Polymerization is not known to occur under normal temperatures and pressures. Not reactive with water.

HAZARDOUS DECOMPOSITION PRODUCTS: None under normal temperatures and pressures. See also **SECTION 5: HAZARDOUS COMBUSTION PRODUCTS.**

SECTION 11: TOXICOLOGICAL INFORMATION

SENSITIZATION: Based on best current information, there is no known human sensitization associated with these products.

MUTAGENICITY: Based on best current information, there is no known mutagenicity associated with these products.

CARCINOGENICITY: Based on best current information, there is no known carcinogenicity as regulated by OSHA; as categorized by ACGIH A1 or A2 substances; as categorized by IARC Group 1, Group 2A, or Group 2B agents; or as listed by NTP as either known carcinogens or substances for which there is limited evidence of carcinogenicity in humans or sufficient evidence of carcinogenicity in experimental animals.

Also see **SECTION 15: CALIFORNIA.**

REPRODUCTIVE TOXICITY: Based on best current information, there is no known reproductive toxicity associated with these products.

Also see **SECTION 15: CALIFORNIA.**

TERATOGENICITY: Based on best current information, there is no known teratogenicity associated with these products.

TOXICOLOGICALLY SYNERGISTIC PRODUCT(S): Based on best current information, there are no known toxicologically synergistic products associated with these products.

SECTION 12: ECOLOGICAL INFORMATION

ECOTOXICITY: A Static Acute Bioassay as per the California Department of Fish and Game WPCL, was done using fathead minnows, and up to 750 ppm of the products in water.

The material passed the bioassay with only 1 out of 10 minnows dying. To fail the bioassay, more than 40% of the fish would die in 750 ppm.

313:	requirements of section 313 of Title III of the Superfund Amendments and Reauthorization Act of 1986 (SARA) and 40 CFR Part 372.
CERCLA:	Based on the ingredient listed in **SECTION 2,** these products do not contain any "hazardous substance" listed pursuant to the Comprehensive Environmental Response, Compensation and Liability Act of 1980 (CERCLA) in 40 CFR Part 302, Table 302.4.
TSCA:	All the components of these products are listed on the TSCA Inventory.
CALIFORNIA:	These products may contain detectable amounts of benzene CAS 71-43-2 (at or below 0.4 mg/L) and p-dichlorobenzene CAS 106-46-7 (at or below 5 mg/L). WARNING: These chemicals are known to the State of California to cause cancer. These products may contain detectable amounts of benzene CAS 71-43-2 (at or below 0.4 mg/L) and toluene CAS 108-88-3 (at or below 30 mg/L). WARNING: These chemicals are known to the State of California to cause birth defects or other reproductive harm.

CANADIAN REGULATIONS
These products have been classified in accordance with the hazard criteria of the Controlled Products Regulations (CPR) and the MSDS contains all the information required by the CPR.

WHMIS:	B3, D2B
CANADIAN ENVIRONMENTAL PROTECTION ACT (CEPA):	All the components of these products are listed on the Canadian Domestic Substances List (DSL).

SECTION 16: OTHER INFORMATION

REVISION INFORMATION: Updated with Safety-Kleen Texas address, modified Medical Emergency phone number, modified Transportation Spill number and modified Technical Information phone number.

LABEL/OTHER INFORMATION: These products are United States Department of Agriculture (USDA) approved and Underwriter's Laboratories (UL) classified.

User assumes all risks incident to the use of these products. To the best of our knowledge, the information contained herein is accurate. However, Safety-Kleen assumes no liability whatsoever for the accuracy or completeness of the information contained herein. No representations or warranties, either express or implied, or merchantability, fitness for a particular purpose or of any other nature are made hereunder with respect to information or the product to which information refers. The data contained on this sheet apply to the products as supplied to the user.

©2002 Printed in the USA.

HEAVY DUTY AQUEOUS CLEANER

MATERIAL SAFETY DATA SHEET FOR USA AND CANADA

safety-kleen.

SECTION 1: PRODUCT AND COMPANY IDENTIFICATION

PRODUCT NAME: **HEAVY DUTY AQUEOUS CLEANER**

SYNONYM(S): Not available.

PRODUCT PART NUMBER: 6865

PRODUCT USE: Paint gun cleaner for water based paints.
If this product is used in combination with other products, refer to the Material Safety Data Sheets for those products.

24-HOUR EMERGENCY PHONE NUMBERS

These numbers are for emergency use only. If you desire non-emergency product information, please call a phone number listed below.

MEDICAL:	TRANSPORTATION (SPILL):
1-800-752-7869	**1-800-468-1760**

MANUFACTURER/ SUPPLIER: Safety-Kleen Systems, Inc.
5400 Legacy Drive
Cluster II, Building 3
Plano, Texas 75024
USA
1-800-669-5740
www.safety-kleen.com

TECHNICAL INFORMATION: 1-800-669-5740, Press 1 then Extension 7500

MSDS FORM NUMBER: 82640 **ISSUE:** December 2, 2002

ORIGINAL ISSUE: September 16, 1994 **SUPERSEDES:** June 20, 2000

PREPARED BY: Product MSDS Coordinator **APPROVED BY:** MSDS Task Force

SECTION 2: COMPOSITION/INFORMATION ON INGREDIENTS

				OSHA PEL		ACGIH TLV®			
WT%	NAME	SYNONYM	CAS NO.	TWA	STEL	TWA	STEL	LD[a]	LC[b]
95 to 99	Dihydrogen oxide	Water	7732-18-5	N. Av.	N. Av.	N. Av.	N. Av.	N. Av.	N. Av.
1 to 5	Ethanol, 2-(dimethylamino)-	N, N-Dimethylethanolamine; Deanol	108-01-0	N. Av.[d]	N. Av.[e]	N. Av.	N. Av.	2000 (1370 uL/kg)[c]	1641 ppm/ 4 hours

N.Av. = Not Available
[a]Oral-Rat LD_{50} (mg/kg)
[b]Inhalation-Rat LC_{50}
[c]Skin-Rabbit LD_{50}
[d]UK OES 2 ppm
[e]UK OES 6 ppm

SECTION 3: HAZARDS IDENTIFICATION

EMERGENCY OVERVIEW

APPEARANCE
Liquid, colorless to pale yellow, amine odor

WARNING!
HEALTH HAZARDS
May be harmful if inhaled.
May cause allergic respiratory reaction.
May be harmful or fatal if swallowed.
May irritate the respiratory tract (nose, throat, and lungs), eyes, and skin.
Contains material which may cause birth defects.
Contains material which may cause lung damage.

POTENTIAL HEALTH EFFECTS

INHALATION (BREATHING): Respiratory tract sensitization to N, N-dimethylethanolamine has been reported. High concentrations of vapor or mist may be harmful if inhaled. High concentrations of vapor or mist may irritate the respiratory tract (nose, throat, and lungs). High concentrations of vapor or mist may cause nausea, vomiting, headaches, dizziness, loss of coordination, numbness, and other central nervous system effects. Very high concentrations of N, N-dimethylethanolamine vapor or mist may cause pulmonary edema (pneumonia) immediately in severe cases or can be delayed 5 to 72 hours.

EYES: May cause irritation.

SKIN: May cause irritation. Not likely to be absorbed through the skin in harmful amounts.

INGESTION (SWALLOWING): May be harmful or fatal if swallowed. May cause throat irritation, nausea, vomiting, coma, and central nervous system effects as noted under **INHALATION (BREATHING)**. Breathing product into the lungs during ingestion or vomiting may cause lung injury and possible death.

MEDICAL CONDITIONS AGGRAVATED BY EXPOSURE: Individuals with pre-existing respiratory tract (nose, throat, and lungs), central nervous system, eye, and/or skin disorders may have increased susceptibility to the effects of exposure.

CHRONIC: Prolonged or repeated inhalation may cause breathing difficulties and toxic effects as noted under **INHALATION (BREATHING)**. Prolonged or repeated eye contact may cause inflammation of the membrane lining the eyelids and covering the eyeball (conjunctivitis). Prolonged or repeated skin contact may cause drying, cracking, redness, itching, and/or swelling (dermatitis).

CANCER INFORMATION: No known carcinogenicity. For more information, see **SECTION 11: CARCINOGENICITY.**

POTENTIAL ENVIRONMENTAL EFFECTS
Not available. Also see **SECTION 12: ECOLOGICAL INFORMATION.**

SECTION 4: FIRST AID MEASURES

INHALATION: (BREATHING) Remove to fresh air. If not breathing, give artificial respiration. If breathing is difficult, give oxygen. Oxygen should only be administered by qualified personnel. Someone should stay with victim. Get medical attention if breathing difficulty persists.

EYES: If irritation or redness from exposure to vapor develops, move away from exposure into fresh air. Upon contact, immediately flush eyes with plenty of lukewarm water, holding eyelids apart, for 15 minutes. Get medical attention.

SKIN: Remove affected clothing and shoes. Wash skin thoroughly with soap and water. Get medical attention if irritation or pain develops or persists.

INGESTION: (SWALLOWING) Do NOT induce vomiting. Immediately get medical attention. Call 1-800-752-7869 for additional information.
If spontaneous vomiting occurs, keep head below hips to avoid breathing the product into the lungs. Never give anything to an unconscious person by mouth.

NOTE TO PHYSICIANS: Treat symptomatically and supportively. Increased sensitivity of the heart to Adrenaline (epinephrine) may be caused by overexposure to product. Avoid gastric lavage. Treatment may vary with condition of victim and specifics of incident. Call 1-800-752-7869 for additional information.

SECTION 5: FIRE FIGHTING MEASURES

FLASH POINT: Not applicable (product will not burn).

FLAMMABLE LIMITS IN AIR: **LOWER:** Not applicable. **UPPER:** Not applicable.

AUTOIGNITION TEMPERATURE: Not applicable.

HAZARDOUS COMBUSTION PRODUCTS: Product itself does not burn, but may decompose upon heating to produce nitrogen oxides and carbon monoxide.

CONDITIONS OF FLAMMABILITY: Product will not burn.

EXTINGUISHING MEDIA: Not applicable.

NFPA 704 HAZARD IDENTIFICATION: This information is intended solely for the use by individuals trained in this system.

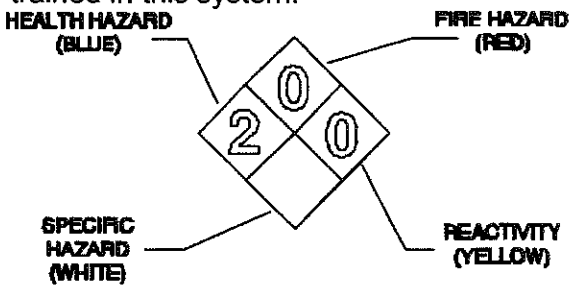

FIRE FIGHTING INSTRUCTIONS: Keep storage containers cool with water spray. A positive-pressure, self-contained breathing apparatus (SCBA) and full-body protective equipment are required for fire emergencies.

FIRE AND EXPLOSION HAZARDS: Heated containers may rupture. "Empty" containers may retain residue and can be dangerous. Product is not sensitive to mechanical impact or static discharge.

SECTION 6: ACCIDENTAL RELEASE MEASURES

Do not touch or walk through spilled product. Stop leak if you can do it without risk. Wear protective equipment and provide engineering controls as specified in **SECTION 8: EXPOSURE CONTROLS/PERSONAL PROTECTION**. Isolate hazard area. Keep unnecessary and unprotected personnel from entering. Ventilate area and avoid breathing vapor or mist. A vapor suppressing foam may be used to reduce vapors. Contain spill away from surface waters and sewers. Contain spill as a liquid for possible recovery, or sorb with compatible sorbent material and shovel with a clean tool into a sealable container for disposal.

Additionally, for large spills: Water spray may reduce vapor, but may not prevent ignition in closed spaces. Dike far ahead of liquid spill for collection and later disposal.

SECTION 7: HANDLING AND STORAGE

HANDLING: Use clean tools. When transferring product, storage tanks, tanker trucks, and rail tank cars should be grounded and bonded. Do not breathe vapor or mist. Use in a well ventilated area. Avoid contact with eyes, skin, clothing, and shoes.

SHIPPING AND STORING: Keep container tightly closed when not in use and during transport. Empty product containers may retain product residue and can be dangerous. See **SECTION 14: TRANSPORT INFORMATION** for Packing Group information.

SECTION 8: EXPOSURE CONTROLS/PERSONAL PROTECTION

ENGINEERING CONTROLS: Provide general ventilation needed to maintain concentration of vapor or mist below applicable exposure limits. Where adequate general ventilation is unavailable, use process enclosures, local exhaust ventilation, or other engineering controls to control airborne levels below applicable exposure limits.

PERSONAL PROTECTIVE EQUIPMENT

RESPIRATORY PROTECTION: Use NIOSH-certified, air-purifying respirators with N-, P-, or R- series particulate filter and organic vapor cartridges when concentration of vapor or mist exceeds applicable exposure limits. Protection provided by air-purifying respirators is limited. Selection and use of respiratory protective equipment should be in accordance in the USA with OSHA General Industry Standard 29 CFR 1910.134; or in Canada with CSA Standard Z94.4. Consult a qualified Industrial Hygienist or Safety Professional for respirator selection guidance.

EYE PROTECTION: Wearing chemical goggles is recommended.
Contact lens may be worn with eye protection.

SKIN PROTECTION: Wearing laminate (such as Ansell Edmont Barrier® or North Silver Shield/ 4H®), or equivalent protective gloves is recommended. Wearing natural rubber (latex) or equivalent gloves is not recommended.

To avoid prolonged or repeated contact with product where spills and splashes are likely, wear appropriate chemical-resistant faceshield, boots, apron, whole body suits, or other protective clothing.

PERSONAL HYGIENE: Wash thoroughly with soap and water after handling product and before eating, drinking, or using tobacco products. Clean affected clothing, shoes, and protective equipment before reuse. Discard affected clothing, shoes, and/or protective equipment if they cannot be thoroughly cleaned. Discard leather articles, such as shoes, saturated with the product.

OTHER PROTECTIVE EQUIPMENT: Where spills and splashes are likely, facilities storing or using this product should be equipped with an emergency eyewash and shower, both equipped with clean water, in the immediate work area.

SECTION 9: PHYSICAL AND CHEMICAL PROPERTIES

PHYSICAL STATE, APPEARANCE, AND ODOR: Liquid, colorless to pale yellow, amine odor.

ODOR THRESHOLD: 0.04 ppb

MOLECULAR WEIGHT: 89.1 (based on N, N-Dimethylethanolamine)

SPECIFIC GRAVITY: 1 (water = 1)

DENSITY: 8.34 LB/US gal (1000 g/l)

VAPOR DENSITY: greater than 1 (air = 1)

VAPOR PRESSURE: 17.5 mm Hg at 68°F (20°C)

BOILING POINT: 212°F (100°C)

FREEZING/MELTING POINT: 32°F (0°C)

pH: 10

EVAPORATION RATE: less than 1 (butyl acetate = 1)

SOLUBILITY IN WATER: Complete.

FLASH POINT: Not applicable (product will not burn).

FLAMMABLE LIMITS IN AIR: **LOWER:** Not applicable. **UPPER:** Not applicable.

AUTOIGNITION TEMPERATURE: Not applicable.

SECTION 10: STABILITY AND REACTIVITY

STABILITY: Stable under normal temperatures and pressures. Avoid heat, sparks, or flame.

INCOMPATIBILITY: Avoid acids, oxidizing agents, or reactive metals.

REACTIVITY: Polymerization is not known to occur under normal temperatures and pressures. Not reactive with water.

HAZARDOUS DECOMPOSITION PRODUCTS: None under normal temperatures and pressures. Also see **SECTION 5: HAZARDOUS COMBUSTION PRODUCTS.**

SECTION 11: TOXICOLOGICAL INFORMATION

SENSITIZATION: N, N-Dimethylethanolamine has demonstrated human effects of respiratory tract sensitization.

Based on best current information, the other component listed in **SECTION 2** is not a sensitizer.

MUTAGENICITY: Based on best current information, there is no known mutagenicity associated with this product.

CARCINOGENICITY: Based on best current information, there is no known carcinogenicity as regulated by OSHA; as categorized by ACGIH A1 or A2 substances; as categorized by IARC Group 1, Group 2A, or Group 2B agents; or as listed by NTP as either known carcinogens or substances for which there is limited evidence of carcinogenicity in humans or sufficient evidence of carcinogenicity in experimental animals.

REPRODUCTIVE TOXICITY: Based on best current information, there is no known reproductive toxicity associated with this product.

TERATOGENICITY: N, N-Dimethylethanolamine has demonstrated animal effects of teratogenicity.

Based on best current information, the other component listed in **SECTION 2** is not a teratogen.

TOXICOLOGICALLY SYNERGISTIC PRODUCT(S): Based on best current information, there are no known toxicologically synergistic products associated with this product.

SECTION 12: ECOLOGICAL INFORMATION

ECOTOXICITY: Not available.

OCTANOL/WATER PARTITION COEFFICIENT: Not available.

VOLATILE ORGANIC COMPOUNDS: 1 to 5 WT%; 0.08 to 0.41 LB/US gal; 10 to 50 g/l
As per 40 CFR Part 51.100(s).

SECTION 13: DISPOSAL CONSIDERATIONS

Dispose in accordance with federal, state, provincial, and local regulations. Regulations may also apply to empty containers. The responsibility for proper waste disposal lies with the owner of the waste. Contact Safety-Kleen regarding proper recycling or disposal.

SECTION 14: TRANSPORT INFORMATION

DOT: Not regulated.

TDG: This product is not for sale or use in Canada.

EMERGENCY RESPONSE GUIDE NUMBER: Not applicable.
Reference *North American Emergency Response Guidebook*

SECTION 15: REGULATORY INFORMATION

USA REGULATIONS

SARA SECTIONS 302 AND 304: Based on the ingredients listed in **SECTION 2**, this product does not contain any "extremely hazardous substances" listed pursuant to Title III of the Superfund Amendments and Reauthorization Act of 1986 (SARA) Section 302 or Section 304 as identified in 40 CFR Part 355, Appendix A and B.

SARA SECTIONS 311 AND 312: This product poses the following health hazards as defined in 40 CFR Part 370 and is subject to the requirements of sections 311 and 312 of Title III of the Superfund Amendments and Reauthorization Act of 1986 (SARA):

Immediate (Acute) Health Hazard
Delayed (Chronic) Health Hazard

SARA SECTION 313:	This product does not contain "toxic" chemicals subject to the requirements of section 313 of Title III of the Superfund Amendments and Reauthorization Act of 1986 (SARA) and 40 CFR Part 372.
CERCLA:	Based on the ingredients listed in **SECTION 2,** this product does not contain any "hazardous substances" listed pursuant to the Comprehensive Environmental Response, Compensation and Liability Act of 1980 (CERCLA) in 40 CFR Part 302, Table 302.4.
TSCA:	All the components of this product are listed on, or are automatically included as "naturally occurring chemical substances" on, the TSCA Inventory.
CALIFORNIA:	This product does not contain detectable amounts of any chemical known to the State of California to cause cancer. This product does not contain detectable amounts of any chemical known to the State of California to cause birth defects or other reproductive harm.

CANADIAN REGULATIONS
This product has been classified in accordance with the hazard criteria of the Controlled Products Regulations (CPR) and the MSDS contains all the information required by the CPR.

WHMIS:	This product is not for sale or use in Canada.
CANADIAN ENVIRONMENTAL PROTECTION ACT (CEPA):	This product is not for sale or use in Canada.

SECTION 16: OTHER INFORMATION

REVISION INFORMATION: Updated with Safety-Kleen Texas address, modified Medical Emergency phone number, modification to Transportation Spill number, and modification of Technical Information phone number.

LABEL/OTHER INFORMATION: Not available.

User assumes all risks incident to the use of this product. To the best of our knowledge, the information contained herein is accurate. However, Safety-Kleen assumes no liability whatsoever for the accuracy or completeness of the information contained herein. No representations or warranties, either express or implied, or merchantability, fitness for a particular purpose or of any other nature are made hereunder with respect to information or the product to which information refers. The data contained on this sheet apply to the product as supplied to the user.

©2002 Safety-Kleen Systems, Inc.

IMMERSION CLEANER AND COLD PARTS CLEANER

MATERIAL SAFETY DATA SHEET FOR USA AND CANADA

safety-kleen.

SECTION 1: PRODUCT AND COMPANY IDENTIFICATION

PRODUCT NAME: **IMMERSION CLEANER AND COLD PARTS CLEANER**

SYNONYMS: None. Also formerly known as SAFETY-KLEEN IMMERSION CLEANER, SAFETY-KLEEN IMMERSION SOLVENT, and SAFETY-KLEEN COLD PARTS CLEANER 699.

PRODUCT PART NUMBERS: 50, 699, 6861, 9699

PRODUCT USE: For cleaning carburetors and metal parts.
If this product is used in combination with other products, refer to the Material Safety Data Sheets for those products.

24-HOUR EMERGENCY PHONE NUMBERS

These numbers are for emergency use only. If you desire non-emergency product information, please call a phone number listed below.

MEDICAL:	**TRANSPORTATION (SPILL):**
1-800-752-7869	**1-800-468-1760**

SUPPLIER: Safety-Kleen Systems, Inc.
5400 Legacy Drive
Cluster II, Building 3
Plano, Texas 75024
USA
1-800-669-5740

TECHNICAL INFORMATION: 1-800-669-5740, Press 1 then Extension 7500

MSDS FORM NUMBER: 82411 **ISSUE:** December 10, 2002

ORIGINAL ISSUE: December 1, 1989 **SUPERSEDES:** June 26, 2000

PREPARED BY: Product MSDS Coordinator **APPROVED BY:** MSDS Task Force

SECTION 2: COMPOSITION/INFORMATION ON INGREDIENTS

				OSHA PEL		ACGIH TLV®			
WT%	NAME	SYNONYM	CAS NO.	TWA	STEL	TWA	STEL	LD	LC[b]
30 to 60	Solvent naphtha (petroleum), heavy arom.	Aromatic 150	64742-94-5	N. Av.[c]	N. Av.	N. Av.	N. Av.	>5000[k] mg/kg	>590 mg/m^3/4 hours
10 to 30	2-Pyrrolidinone, 1-methyl-	N-Methyl-2-pyrrolidinone; NMP	872-50-4	N. Av.[d]	N. Av.	N. Av.	N. Av.	3914[l] mg/kg	N. Av.
7 to 13	Propanol, 1(or 2)-(2-methoxymethylethoxy)-	Dipropylene glycol monomethyl ether	34590-94-8	100 ppm (skin)	N. Av.	100 ppm (skin)	150 ppm	5400 uL/kg[f]	N. Av.
5 to 10	Oleic acid	Z-9-Octadecenoic acid	112-80-1	5[e] mg/m^3	N. Av.	10[e] mg/m^3	N. Av.	>2000 mg/kg	N. Av.
3 to 7	Monoethanolamine	2-Amino-ethanol; MEA	141-43-5	3 ppm	N. Av.	3 ppm	6 ppm	1720[g] mg/kg	N. Av.
3 to 6	Naphthalene	Naphthalin	91-20-3	10 ppm	N. Av.	10 ppm (skin)	15 ppm (skin)	490[h] mg/kg	>340 mg/m^3/1 hour

N.Av. = Not Available
[a]Oral-rat LD_{50}
[b]Inhalation-rat LC_{50}
[c]Manufacturer recommended TWA = 100 ppm
[d]AIHA recommended TWA 10 ppm
[e]based on Vegetable oil mists
[f]Skin-rabbit LD_{50} 10 ml/kg
[g]Skin-rabbit LD_{50} 1 ml/kg
[h]Skin-rabbit LD_{50} > 2500 mg/kg
[k]Skin-rabbit LD_{50} >3200 mg/kg
[l]Skin-rabbit LD_{50} 8000 mg/kg

SECTION 3: HAZARDS IDENTIFICATION

EMERGENCY OVERVIEW

APPEARANCE
Liquid, clear and brown.

WARNING!

PHYSICAL HAZARD
Combustible liquid and vapor.

HEALTH HAZARDS
May be harmful if inhaled.
May burn eyes.
May burn skin.
May be harmful if absorbed through skin.
May be fatal if swallowed.
May irritate the respiratory tract (nose, throat, and lungs).
Contains material which may cause birth defects.

Contains material which may cause central nervous system, liver, kidney, lung, blood cell, eye, and skin damage.

POTENTIAL HEALTH EFFECTS

INHALATION (BREATHING): High concentrations of vapor or mist may be harmful if inhaled. Inhaling naphthalene may cause eye nerve inflammation (optic neuritis), kidney, and blood cell damage. High concentrations of vapor or mist may irritate the respiratory tract (nose, throat, and lungs). High concentrations of vapor or mist may cause nausea, vomiting, headaches, dizziness, loss of coordination, numbness, and other central nervous system effects. Massive acute overexposure may cause rapid central nervous system depression, sudden collapse, coma, and/or death.

EYES: May cause irritation, pain, and/or burns.

SKIN: May cause irritation, swelling, blistering, and/or burns. Dipropylene glycol monomethyl ether and naphthalene may be absorbed through the skin and cause harm as noted under **INHALATION (BREATHING)**.

INGESTION (SWALLOWING): May be fatal if swallowed. May cause throat irritation, nausea, vomiting, and central nervous system effects as noted under **INHALATION (BREATHING)**, and/or heart injury. Monoethanolamine may burn mouth, throat, esophagus, and stomach. Breathing product into the lungs during ingestion or vomiting may cause lung injury and possible death.

MEDICAL CONDITIONS AGGRAVATED BY EXPOSURE: Individuals with pre-existing cardiovascular, liver, kidney, respiratory tract (nose, throat, and lungs), central nervous system, eye, and/or skin disorders may have increased susceptibility to the effects of exposure.

CHRONIC: Prolonged or repeated inhalation of monoethanolamine may cause inflammation and sores in the mouth; and bronchial and/or gastrointestinal disturbances. Prolonged or repeated inhalation of naphthalene may cause cataracts and/or corneal inflammation and sores. Prolonged or repeated inhalation may cause toxic effects as noted under **INHALATION (BREATHING)**. Prolonged or repeated eye contact may cause inflammation of the membrane lining the eyelids and covering the eyeball (conjunctivitis); and/or burns. Prolonged or repeated skin contact may cause drying, cracking, redness, itching, and/or swelling (dermatitis); and/or burns.

CANCER INFORMATION: No known carcinogenicity. For more information, see **SECTION 11: CARCINOGENICITY**.

Also see **SECTION 15: CALIFORNIA**.

POTENTIAL ENVIRONMENTAL EFFECTS

Not available. Also see **SECTION 12: ECOLOGICAL INFORMATION**.

SECTION 4: FIRST AID MEASURES

INHALATION: (BREATHING) Remove to fresh air. If not breathing, give artificial respiration. If breathing is difficult, give oxygen. Oxygen should only be administered by qualified personnel. Someone should stay with victim. Get medical attention if breathing difficulty persists.

EYES: If irritation or redness from exposure to vapor develops, move away from exposure into fresh air. Upon contact, immediately flush eyes with plenty of lukewarm water, holding eyelids apart, for 15 minutes. Get medical attention.

SKIN: Remove affected clothing and shoes. Wash skin thoroughly with soap and water. Get medical attention if irritation or pain develops or persists.

INGESTION: (SWALLOWING) Do NOT induce vomiting. Immediately get medical attention. Call 1-800-752-7869 for additional information.
If spontaneous vomiting occurs, keep head below hips to avoid breathing the product into the lungs. Never give anything to an unconscious person by mouth.

NOTE TO PHYSICIANS: Treat symptomatically and supportively. Administration of gastric lavage is not recommended for monoethanolamine poisoning. Treatment may vary with condition of victim and specifics of incident. Call 1-800-752-7869 for additional information.

SECTION 5: FIRE FIGHTING MEASURES

FLASH POINT: greater than 140°F (60°C) Tag Closed Cup

FLAMMABLE LIMITS IN AIR: **LOWER:** 0.8 VOL% (approximately)
UPPER: 7 VOL% (approximately)

AUTOIGNITION TEMPERATURE: 829°F (443°C) (approximately)

HAZARDOUS COMBUSTION PRODUCTS: Decomposition and combustion materials may be toxic. Burning may produce nitrogen oxides, acid halides, carbon monoxide, and unidentified organic compounds.

CONDITIONS OF FLAMMABILITY: Heat, sparks, or flame.

EXTINGUISHING MEDIA: Carbon dioxide, alcohol-resistant foam, dry chemical, water spray, or water fog.

NFPA 704

HAZARD IDENTIFICATION:

This information is intended solely for the use by individuals trained in this system.

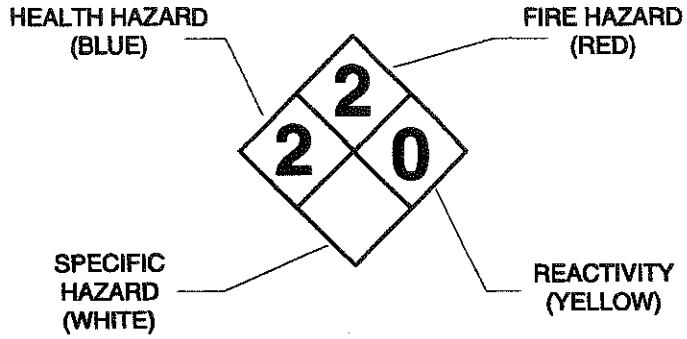

FIRE FIGHTING INSTRUCTIONS:

Keep storage containers cool with water spray.
A positive-pressure, self-contained breathing apparatus (SCBA) and full-body protective equipment are required for fire emergencies.

FIRE AND EXPLOSION HAZARDS:

Vapor explosion hazard indoors, outdoors, or in sewers. Vapors may travel to ignition source and flashback. Vapors will spread along the ground and collect in low or confined areas. Run-off to sewer may create a fire hazard. Heated containers may rupture. "Empty" containers may retain residue and can be dangerous. Product may be sensitive to static discharge, which could result in fire or explosion.

SECTION 6: ACCIDENTAL RELEASE MEASURES

Remove all ignition sources. Do not touch or walk through spilled product. Stop leak if you can do it without risk. Wear protective equipment and provide engineering controls as specified in **SECTION 8: EXPOSURE CONTROLS/PERSONAL PROTECTION**. Isolate hazard area. Keep unnecessary and unprotected personnel from entering. Ventilate area and avoid breathing vapor or mist. A vapor suppressing foam may be used to reduce vapors. Contain spill away from surface waters and sewers. Contain spill as a liquid for possible recovery or sorb with compatible sorbent material and shovel with a clean, sparkproof tool into a sealable container for disposal.

Additionally, for large spills: Water spray may reduce vapor, but may not prevent ignition in closed spaces. Dike far ahead of liquid spill for collection and later disposal.

There may be specific federal regulatory reporting requirements associated with spills, leaks, or releases of this product. Also see **SECTION 15: REGULATORY INFORMATION.**

SECTION 7: HANDLING AND STORAGE

HANDLING: Keep away from heat, sparks, or flame. Where flammable mixtures may be present, equipment safe for such locations should be used. Use clean, sparkproof tools and explosion-proof equipment. When transferring product, metal containers, including trucks and tank cars, should be grounded and bonded. Do not breathe vapor or mist. Use in a well ventilated area. Avoid contact with eyes, skin, clothing, and shoes. Do not smoke while using this product.

SHIPPING AND STORING: Keep container tightly closed when not in use and during transport. Do not pressurize, cut, weld, braze, solder, drill, or grind containers. Keep containers away from heat, flame, sparks, static electricity, or other sources of ignition. Empty product containers may retain product residue and can be dangerous. See **SECTION 14: TRANSPORT INFORMATION** for Packing Group information.

SECTION 8: EXPOSURE CONTROLS/PERSONAL PROTECTION

ENGINEERING CONTROLS: Provide general ventilation needed to maintain concentration of vapor or mist below applicable exposure limits. Where adequate general ventilation is unavailable, use process enclosures, local exhaust ventilation, or other engineering controls to control airborne levels below recommended exposure limits. Where explosive mixtures may be present, equipment safe for such locations should be used.

PERSONAL PROTECTIVE EQUIPMENT

RESPIRATORY PROTECTION: Use NIOSH-certified, full-face, air-purifying respiratory protective equipment with organic vapor cartridges when concentration of vapor or mist exceeds applicable exposure limits. Protection provided by air-purifying respirators is limited. Selection and use of respiratory protective equipment should be in accordance in the USA with OSHA General Industry Standard 29 CFR 1910.134; or in Canada with CSA Standard Z94.4.

EYE PROTECTION: Where eye contact is likely, wear chemical goggles; contact lens use is not recommended.

SKIN PROTECTION: Where skin contact is likely, wear laminate (Ansell Edmont Barrier®, North Silver Shield®, Safety 4 4h®) or equivalent protective gloves; use of neoprene, natural rubber, or equivalent gloves is not recommended.

To avoid prolonged or repeated contact where spills and splashes are likely, wear appropriate chemical-resistant faceshield, boots, apron, whole body suits, or other protective clothing.

PERSONAL HYGIENE: Use good personal hygiene. Wash thoroughly with soap and water after handling product and before eating, drinking, or using tobacco products. Clean affected clothing, shoes, and protective equipment before reuse. Discard affected clothing, shoes, or protective equipment if they cannot be thoroughly cleaned. Discard leather articles, such as shoes, saturated with the product.

OTHER PROTECTIVE EQUIPMENT: Where spills and splashes are likely, facilities storing or using this product should be equipped with an emergency eyewash and shower, both equipped with clean water, in the immediate work area.

SECTION 9: PHYSICAL AND CHEMICAL PROPERTIES

PHYSICAL STATE, APPEARANCE, AND ODOR: Liquid, clear and brown.

ODOR THRESHOLD: Not available.

MOLECULAR WEIGHT: Not available.

SPECIFIC GRAVITY: 0.95 (water = 1)

DENSITY: 7.9 LB/US gal (950 g/l)

VAPOR DENSITY: 4.4 (air = 1)

VAPOR PRESSURE: less than 0.4 mm Hg at 68°F (20°C)

BOILING POINT: 340°F (171°C) (initial)

FREEZING/MELTING POINT: less than 10°F (-12°C)

pH: 11

EVAPORATION RATE: 1 (butyl acetate = 1)

SOLUBILITY IN WATER: Complete.

FLASH POINT: greater than 140°F (60°C) Tag Closed Cup

FLAMMABLE LIMITS IN AIR: **LOWER:** 0.8 VOL% (approximately)
UPPER: 7 VOL% (approximately)

AUTOIGNITION

TEMPERATURE: 829°F (443°C) (approximately)

SECTION 10: STABILITY AND REACTIVITY

STABILITY: Stable under normal temperatures and pressures. Avoid heat, sparks, or flame.

INCOMPATIBILITY: Avoid acids, oxidizing agents, reactive halogens, or reactive metals. Oleic acid can react with perchlorates or perchloric acid to form explosive products.

REACTIVITY: Polymerization is not known to occur under normal temperatures and pressures. Not reactive with water.

HAZARDOUS DECOMPOSITION PRODUCTS: None under normal temperatures and pressures. See also **SECTION 5: HAZARDOUS COMBUSTION PRODUCTS**.

SECTION 11: TOXICOLOGICAL INFORMATION

SENSITIZATION: Aromatic 150 has demonstrated human effects of skin photosensitization.

Based on best current information, the other components listed in **SECTION 2** are not sensitizers.

MUTAGENICITY: Ethanolamine has demonstrated human effects of mutagenicity. Aromatic 150 and naphthalene have demonstrated animal effects of mutagenicity. 1-Methyl-pyrrolidinone and oleic acid have demonstrated experimental effects of mutagenicity.

Based on best current information, the other component listed in **SECTION 2** is not a mutagen.

CARCINOGENICITY: Based on best current information, there is no known carcinogenicity as regulated by OSHA; as categorized by ACGIH A1 or A2 substances; as categorized by IARC Group 1, Group 2A, or Group 2B agents; or as listed by NTP as either known carcinogens or substances for which there is limited evidence of carcinogenicity in humans or sufficient evidence of carcinogenicity in experimental animals.

Also see **SECTION 15: CALIFORNIA.**

REPRODUCTIVE TOXICITY: 1-Methyl-pyrrolidinone and ethanolamine have demonstrated experimental effects of reproductive toxicity.

Based on best current information, the other components listed in **SECTION 2** are not reproductive toxicants.

Also see **SECTION 15: CALIFORNIA.**

TERATOGENICITY: Naphthalene and ethanolamine have demonstrated animal effects of teratogenicity.

Based on best current information, the other components listed in **SECTION 2** are not teratogens.

TOXICOLOGICALLY SYNERGISTIC PRODUCT(S): Based on best current information, there are no known toxicologically synergistic products associated with this product.

SECTION 12: ECOLOGICAL INFORMATION

ECOTOXICITY: Not available.

OCTANOL/WATER PARTITION COEFFICIENT: Not available.

VOLATILE ORGANIC COMPOUNDS: 92 WT%; 7.3 LB/US gal; 874 g/l
As per 40 CFR Part 51.100(s).

SECTION 13: DISPOSAL CONSIDERATIONS

DISPOSAL: Dispose in accordance with federal, state, provincial, and local regulations. Regulations may also apply to empty containers. The responsibility for proper waste disposal lies with the owner of the waste. Contact Safety-Kleen regarding recycling or proper disposal.

USEPA WASTE CODE(S): This product, if discarded, is not expected to be a characteristic or listed hazardous waste. Processing, use, or contamination by the user may change the waste code(s) applicable to the disposal of this product.

SECTION 14: TRANSPORT INFORMATION

DOT: CORROSIVE LIQUID, BASIC, ORGANIC, N.O.S. (MONOETHANOLAMINE), 8, UN3267, PGIII

TDG: Corrosive Liquids, N.O.S., Class 8 (9.2), UN1760, PGIII (Monoethanolamine)

EMERGENCY RESPONSE GUIDE NUMBER: 132
Reference *North American Emergency Response Guidebook*

SECTION 15: REGULATORY INFORMATION

USA REGULATIONS

SARA SECTIONS 302 AND 304: Based on the ingredients listed in **SECTION 2**, this product does not contain any "extremely hazardous substances" listed pursuant to Title III of the Superfund Amendments and Reauthorization Act of 1986 (SARA) Section 302 or Section 304 as identified in 40 CFR Part 355, Appendix A and B.

SARA SECTIONS 311 AND 312: This product poses the following physical and health hazards as defined in 40 CFR Part 370 and is subject to the requirements of sections 311 and 312 of Title III of the Superfund Amendments and Reauthorization Act of 1986 (SARA):

Immediate (Acute) Health Hazard
Delayed (Chronic) Health Hazard
Fire Hazard

SARA SECTION 313: The following components are subject to the requirements of section 313 of Title III of the Superfund Amendments and Reauthorization Act of 1986 (SARA) and 40 CFR Part 372.

Material	CAS
2-Pyrrolidinone, 1-methyl-	872-50-4
Naphthalene	91-20-3

CERCLA: Based on the ingredients listed in **SECTION 2**, this product contains the following "hazardous substance" listed under the Comprehensive Environmental Response, Compensation and Liability Act of 1980 (CERCLA) in 40 CFR Part 302, Table 302.4 with the following reportable quantity (RQ):

Material	CAS	RQ
Naphthalene	91-20-3	100 LB (45.4 kg)

TSCA: All the components of this product are listed on the TSCA Inventory.

CALIFORNIA: This product contains detectable amounts of arsenic CAS 7440-38-2, benzene CAS 71-43-2, cadmium CAS 7440-43-9, chromium CAS 7440-47-3, lead CAS 7439-92-1, methylene chloride CAS 75-09-2, perchloroethylene CAS 127-18-4, trichloroethylene CAS 79-01-6, dichlorobenzene, para- CAS 106-46-7, beryllium CAS 7440-41-7, and mercury CAS 7439-97-6. WARNING: These chemicals are known to the State of California to cause cancer.

This product contains detectable amounts of arsenic CAS 7440-38-2, benzene CAS 71-43-2, cadmium CAS 7440-43-9, mercury CAS 7439-97-6, lead CAS 7439-92-1, and toluene CAS 108-88-3. WARNING: These chemicals are known to the State of California to cause birth defects or other reproductive harm.

CANADIAN REGULATIONS
This product has been classified in accordance with the hazard criteria of the Controlled Products Regulations (CPR) and the MSDS contains all the information required by the CPR.

WHMIS: B3, D2A, E

CANADIAN ENVIRONMENTAL PROTECTION ACT (CEPA): All the components of this product are listed on the Canadian Domestic Substances List (DSL).

SECTION 16: OTHER INFORMATION

REVISION INFORMATION: Updated with Safety-Kleen Texas address, modified Medical Emergency phone number, modified Transportation Spill number and modified Technical Information phone number

LABEL/OTHER INFORMATION: This product is Underwriter's Laboratories (UL) classified.

User assumes all risks incident to the use of this product. To the best of our knowledge, the information contained herein is accurate. However, Safety-Kleen assumes no liability whatsoever for the accuracy or completeness of the information contained herein. No representations or warranties, either express or implied, or merchantability, fitness for a particular purpose or of any other nature are made hereunder with respect to information or the product to which information refers. The data contained on this sheet apply to the product as supplied to the user.

©2002 Printed in the USA.

MULTI-USE LACQUER THINNER

MATERIAL SAFETY DATA SHEET FOR USA AND CANADA

SECTION 1: PRODUCT AND COMPANY IDENTIFICATION

PRODUCT NAME: **MULTI-USE LACQUER THINNER**

SYNONYM(S): Not available.

PRODUCT PART NUMBERS: 6801, 16801

PRODUCT USE: Lacquer thinner.
If this product is used in combination with other products, refer to the Material Safety Data Sheets for those products.

	24-HOUR EMERGENCY PHONE NUMBERS	
These numbers are for emergency use only. If you desire non-emergency product information, please call a phone number listed below.	**MEDICAL:**	**TRANSPORTATION (SPILL):**
	1-800-752-7869	**1-800-468-1760**

SUPPLIER: Safety-Kleen Systems, Inc.
5400 Legacy Drive
Cluster II, Building 3
Plano, Texas 75024
USA
1-800-669-5740

TECHNICAL INFORMATION: 1-800-669-5740, Press 1 then Extension 7500

MSDS FORM NUMBER: 82410 **ISSUE:** December 10, 2002

ORIGINAL ISSUE: July 20, 1989 **SUPERSEDES:** September 28, 2000

PREPARED BY: Product MSDS Coordinator **APPROVED BY:** MSDS Task Force

SECTION 2: COMPOSITION/INFORMATION ON INGREDIENTS

				OSHA PEL		ACGIH TLV®			
WT%	NAME	SYNONYM	CAS NO.	TWA	STEL	TWA	STEL	LD[a]	LC[b]
0 to 50*	Methylbenzene	Toluene	108-88-3	200 ppm	300 ppm (ceiling)	50 ppm (skin)	N.Av.	636 (14.1 mL/kg[f])	49000 mg/m^3/4 hours
0 to 35*	Solvent naphtha (petroleum), light aliph.	N.Av.	64742-89-8	N.Av.	N.Av.	300[e] ppm	N.Av.	>5000 (>3160 mg/kg[f])	>73680 ppm/4 hours
10 to 30	2-Propanone; Acetone	Dimethyl ketone	67-64-1	1000 ppm	N.Av.	500 ppm	750 ppm	5800	50100 mg/m^3/8 hours
2 to 15*	2-Propanol; Isopropyl alcohol	Isopropanol	67-63-0	400 ppm	N.Av.	400[c] ppm	500[c] ppm	5045 (12800 mg/kg[f])	16000 ppm/8 hours
5 to 10*	2-Butanone	Methyl ethyl ketone; MEK	78-93-3	200 ppm	N.Av.	200 ppm	300 ppm	2737 (6480 mg/kg[f])	23500 mg/m^3/8 hours
0 to 10*	2-Methylpropyl ester acetic acid	Isobutyl acetate	110-19-0	150 ppm	N.Av.	150 ppm	N.Av.	13400 (>17400 mg/kg[f])	N.Av.
0 to 10*	Propanoic acid, 3-ethoxy-, ethyl ester	Ethyl 3-ethoxypropanoate	763-69-9	N.Av.[d]	N.Av.	N.Av.	N.Av.	4300 (>10 ml/kg[f])	1000 ppm/6 hours
2 to 5	4-methyl-2-pentanone	Methyl isobutyl ketone	108-10-1	100 ppm	N.Av.	50 ppm	75 ppm	2080 (>20 ml/kg[f])	N.Av.
0 to 5*	Dimethylbenzene; Xylene	Xylol	1330-20-7	100 ppm	N.Av.	100 ppm	150 ppm	4300 >1700 mg/kg[f])	5000 ppm/4 hours
0 to 5*	Methanol	Methyl alcohol	67-56-1	200 ppm	N.Av.	200 ppm (skin)	250 ppm	5628 (15800 mg/kg[f])	64000 ppm/4 hours

N.Av. = Not Available
*Even though the concentration range does not fall under the ranges prescribed by WHMIS, this is the actual range which varies with each batch of the product.

[a]Oral-Rat LD_{50} (mg/kg)

[b]Inhalation-Rat LC_{50}

[c]Notice of Intended Changes: 200 ppm TWA and 400 ppm STEL

[d]Manufacturer recommended: 50 ppm TWA and 100 ppm STEL

[e]Based on VM & P Naphtha

[f]Skin-Rabbit LD_{50}

SECTION 3: HAZARDS IDENTIFICATION

EMERGENCY OVERVIEW

APPEARANCE
Liquid, clear and colorless, solvent odor.

DANGER!

PHYSICAL HAZARDS
Extremely flammable liquid and vapor.
Vapor may cause flash fire.

HEALTH HAZARDS
May be harmful if inhaled.
May be harmful if absorbed through skin.
May be fatal if swallowed.
May irritate the respiratory tract (nose, throat, and lungs), eyes, and skin.
Contains material which may cause birth defects.
Contains material which may cause eye, skin, blood, heart, liver, kidney, brain, and central nervous system damage.

POTENTIAL HEALTH EFFECTS

INHALATION (BREATHING): High concentrations of vapor or mist may be harmful if inhaled. High concentrations of vapor or mist may irritate the respiratory tract (nose, throat, and lungs). High concentrations of methanol vapor or mist may cause blindness. High concentrations of vapor or mist may cause nausea, vomiting, headaches, dizziness, loss of coordination, numbness, and other central nervous system effects. Massive acute overexposure may cause rapid central nervous system depression, irregular heartbeat, respiratory failure, sudden collapse, coma, and/or death.

EYES: May cause irritation, tearing, redness, swelling, burns, and/or damage.

SKIN: May cause irritation, burns, and/or damage. Toluene and methanol may be absorbed through the skin and cause harm as noted under **INHALATION (BREATHING)**.

INGESTION (SWALLOWING): May be fatal if swallowed. Swallowing methanol may cause blindness and/or death. May cause throat irritation, a burning sensation, nausea, abdominal spasms, diarrhea, vomiting, and central nervous system effects as noted under **INHALATION (BREATHING)**. Breathing product into the lungs during ingestion or vomiting may cause lung injury and possible death.

MEDICAL CONDITIONS AGGRAVATED BY EXPOSURE: Individuals with pre-existing cardiovascular, liver, kidney, respiratory tract (nose, throat, and lungs), central nervous system, eye, and/or skin disorders may have increased susceptibility to the effects of exposure.

CHRONIC: Prolonged or repeated inhalation may cause heart, brain, liver, kidney, and central nervous system damage; and toxic effects as noted under **INHALATION (BREATHING)**. Prolonged or repeated eye contact may cause inflammation of the membrane lining the eyelids and covering the eyeball (conjunctivitis); burns, and/or damage. Prolonged or repeated skin contact may cause drying, cracking, redness, itching, and/or swelling (dermatitis); burns, and/or damage.

CANCER INFORMATION: No known carcinogenicity. For more information, see **SECTION 11: CARCINOGENICITY**.

Also see **SECTION 15: CALIFORNIA**.

POTENTIAL ENVIRONMENTAL EFFECTS
Not available. Also see **SECTION 12: ECOLOGICAL INFORMATION**.

SECTION 4: FIRST AID MEASURES

INHALATION: (BREATHING) Remove to fresh air. If not breathing, give artificial respiration. If breathing is difficult, give oxygen. Oxygen should only be administered by qualified personnel. Someone should stay with victim. Get medical attention if breathing difficulty persists.

EYES: If irritation or redness from exposure to vapor develops, move away from exposure into fresh air. Upon contact, immediately flush eyes with plenty of lukewarm water, holding eyelids apart, for 15 minutes. Get medical attention.

SKIN: Remove affected clothing and shoes. Wash skin thoroughly with soap and water. Get medical attention if irritation or pain develops or persists.

INGESTION: (SWALLOWING) Do NOT induce vomiting. Immediately get medical attention. Call 1-800-752-7869 for additional information.
If spontaneous vomiting occurs, keep head below hips to avoid breathing the product into the lungs. Never give anything to an unconscious person by mouth.

NOTE TO PHYSICIANS: Treat symptomatically and supportively. Increased sensitivity of the heart to Adrenaline (epinephrine) may be caused by overexposure to product. Administration of gastric lavage if warranted, should be performed by qualified medical personnel. Treatment may vary with condition of victim and specifics of incident. Call 1-800-752-7869 for additional information.

SECTION 5: FIRE FIGHTING MEASURES

FLASH POINT: less than 20°F (-7°C) Tag Closed Cup

FLAMMABLE LIMITS IN AIR: **LOWER:** 1.0 VOL% minimum (approximately)
UPPER: 36.0 VOL% maximum (approximately)

AUTOIGNITION TEMPERATURE: 711°F (377°C) minimum (approximately)

HAZARDOUS COMBUSTION PRODUCTS: Decomposition and combustion materials may be toxic. Burning may produce hydrocarbon gases, aldehydes, alcohols, organic acids, carbon monoxide, and unidentified organic compounds.

CONDITIONS OF FLAMMABILITY: Heat, sparks, or flame.

EXTINGUISHING MEDIA: Carbon dioxide, alcohol-resistant foam, dry chemical, or water spray.

NFPA 704 HAZARD IDENTIFICATION: This information is intended solely for the use by individuals trained in this system.

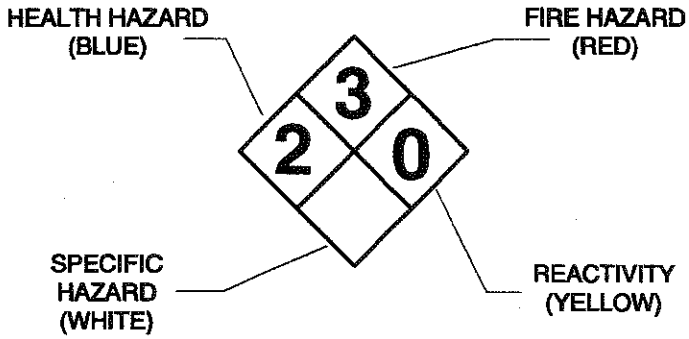

FIRE FIGHTING INSTRUCTIONS: Keep storage containers cool with water spray.
A positive-pressure, self-contained breathing apparatus (SCBA) and full-body protective equipment are required for fire emergencies.

FIRE AND EXPLOSION HAZARDS: Vapor explosion hazard indoors, outdoors, or in sewers. Vapors may travel to ignition source and flashback. Vapors will spread along the ground and collect in low or confined areas. Run-off to sewer may create a fire or explosion hazard. Heated containers may rupture, explode, or be thrown into the air. "Empty" containers may retain residue and can be dangerous. Product is not sensitive to mechanical impact. Product may be sensitive to static discharge, which could result in fire or explosion.

SECTION 6: ACCIDENTAL RELEASE MEASURES

Remove all ignition sources. Do not touch or walk through spilled product. Stop leak if you can do it without risk. Wear protective equipment and provide engineering controls as specified in **SECTION 8: EXPOSURE CONTROLS/PERSONAL PROTECTION**. Isolate hazard area. Keep unnecessary and unprotected personnel from entering. Ventilate area and avoid breathing vapor or mist. A vapor suppressing foam may be used to reduce vapors. Contain spill away from surface waters and sewers. Contain spill as a liquid for possible recovery, or sorb with compatible sorbent material and shovel with a clean, sparkproof tool into a sealable container for disposal.

Additionally, for large spills: Water spray may reduce vapor, but may not prevent ignition in closed spaces. Dike far ahead of liquid spill for collection and later disposal.

There may be specific federal regulatory reporting requirements associated with spills, leaks, or releases of this product. Also see **SECTION 15: REGULATORY INFORMATION.**

SECTION 7: HANDLING AND STORAGE

HANDLING: Keep away from heat, sparks, or flame. Where flammable mixtures may be present, equipment safe for such locations should be used. Use clean, sparkproof tools and explosion-proof equipment. When transferring product, metal containers, including trucks and tank cars, should be grounded and bonded. Do not breathe vapor or mist. Use in a well ventilated area. Avoid contact with eyes, skin, clothing, and shoes. Do not smoke while using this product.

SHIPPING AND STORING: Keep container tightly closed when not in use and during transport. Store containers below 120°F (49°C). Do not pressurize, cut, weld, braze, solder, drill, or grind containers. Keep containers away from heat, flame, sparks, static electricity, or other sources of ignition; containers may explode and cause injury or death. Empty product containers may retain product residue and can be dangerous. See **SECTION 14: TRANSPORT INFORMATION** for Packing Group information.

SECTION 8: EXPOSURE CONTROLS/PERSONAL PROTECTION

ENGINEERING CONTROLS: Provide general ventilation needed to maintain concentration of vapor or mist below applicable exposure limits. Where adequate general ventilation is unavailable, use process enclosures, local exhaust ventilation, or other engineering controls to control airborne levels below applicable exposure limits. Where explosive mixtures may be present, equipment safe for such locations should be used.

PERSONAL PROTECTIVE EQUIPMENT

RESPIRATORY PROTECTION: Use NIOSH-certified, air-purifying respirators with organic vapor cartridges (when mists are present, also use a P- or R- series pre-filter in combination with the cartridges) when concentration of vapor or mist exceeds applicable exposure limits. Do not use N-rated respirators. Protection provided by air-purifying respirators is limited. Selection and use of respiratory protective equipment should be in accordance in the USA with OSHA General Industry Standard 29 CFR 1910.134; or in Canada with CSA Standard Z94.4.

EYE PROTECTION: Where eye contact is likely, wear chemical goggles; contact lens use is not recommended.

SKIN PROTECTION: Where skin contact is likely, wear laminate (Ansell Edmont Barrier®, North Silver Shield®, Safety 4 4h®), or equivalent protective gloves; use of neoprene, polyvinyl chloride (PVC), natural rubber (latex), or equivalent gloves is not recommended.

To avoid prolonged or repeated contact with product where spills and splashes are likely, wear appropriate chemical-resistant faceshield, boots, apron, whole body suits, or other protective clothing.

PERSONAL HYGIENE: Use good personal hygiene. Wash thoroughly with soap and water after handling product and before eating, drinking, or using tobacco products. Clean affected clothing, shoes, and/or protective equipment before reuse. Discard affected clothing, shoes, and protective equipment if they cannot be thoroughly cleaned. Discard leather articles, such as shoes, saturated with the product.

OTHER PROTECTIVE EQUIPMENT: Where spills and splashes are likely, facilities storing or using this product should be equipped with an emergency eyewash and shower, both equipped with clean water, in the immediate work area.

SECTION 9: PHYSICAL AND CHEMICAL PROPERTIES

PHYSICAL STATE, APPEARANCE, AND ODOR:	Liquid, clear and colorless, solvent odor.
ODOR THRESHOLD:	Not available.
MOLECULAR WEIGHT:	Not applicable.
SPECIFIC GRAVITY:	0.84 (water = 1)
DENSITY:	7 LB/US gal (840 g/l)
VAPOR DENSITY:	5.0 (air = 1) maximum (approximately)
VAPOR PRESSURE:	Not available.
BOILING POINT:	Not available.
FREEZING/MELTING POINT:	Not available.
pH:	Not applicable.
EVAPORATION RATE:	Not available.
SOLUBILITY IN WATER:	Slight.
FLASH POINT:	less than 20°F (-7°C) Tag Closed Cup
FLAMMABLE LIMITS IN AIR:	**LOWER:** 1.0 VOL% minimum (approximately) **UPPER:** 36.0 VOL% minimum (approximately)
AUTOIGNITION TEMPERATURE:	711°F (377°C) minimum (approximately)

SECTION 10: STABILITY AND REACTIVITY

STABILITY:	Stable under normal temperatures and pressures. Avoid heat, sparks, or flame.
INCOMPATIBILITY:	Avoid acids, alkalies, oxidizing agents, reducing agents, reactive halogens, or reactive metals.
REACTIVITY:	Polymerization is not known to occur under normal temperatures and pressures. Not reactive with water.

HAZARDOUS DECOMPOSITION PRODUCTS: None under normal temperatures and pressures. Also see **SECTION 5: HAZARDOUS COMBUSTION PRODUCTS.**

SECTION 11: TOXICOLOGICAL INFORMATION

SENSITIZATION: Based on best current information, there is no known human sensitization associated with this product.

MUTAGENICITY: Toluene, isopropanol, xylene, methanol, acetone, and methyl ethyl ketone have demonstrated experimental effects of mutagenicity.

Based on best current information, the other components listed in **SECTION 2** are not mutagens.

CARCINOGENICITY: Based on best current information, there is no known carcinogenicity as regulated by OSHA; as categorized by ACGIH A1 or A2 substances; as categorized by IARC Group 1, Group 2A, or Group 2B agents; or as listed by NTP as either known carcinogens or substances for which there is limited evidence of carcinogenicity in humans or sufficient evidence of carcinogenicity in experimental animals.

Also see **SECTION 15: CALIFORNIA.**

REPRODUCTIVE TOXICITY: Toluene, isopropanol, xylene, acetone, and methanol have demonstrated animal effects of reproductive toxicity. Methyl ethyl ketone has demonstrated experimental effects of reproductive toxicity.

Based on best current information, the other components listed in **SECTION 2** are not reproductive toxicants.

Also see **SECTION 15: CALIFORNIA.**

TERATOGENICITY: Toluene has demonstrated human effects of teratogenicity. Methyl ethyl ketone, isopropanol, xylene, acetone, and methyl isobutyl ketone have demonstrated animal effects of teratogenicity.

Based on best current information, the other components listed in **SECTION 2** are not teratogens.

TOXICOLOGICALLY SYNERGISTIC PRODUCT(S): Based on best current information, there are no known toxicologically synergistic products associated with this product.

SECTION 12: ECOLOGICAL INFORMATION

ECOTOXICITY: 8110 ug/L 96 hours LC_{50} Coho salmon, silver salmon (based on toluene)

OCTANOL/WATER PARTITION COEFFICIENT: Log P_{OW}= 2.73 (based on toluene)

VOLATILE ORGANIC COMPOUNDS: 70 to 85 WT%; 5 to 6 LB/US gal; 590 to 720 g/l
As per 40 CFR Part 51.100(s).

SECTION 13: DISPOSAL CONSIDERATIONS

DISPOSAL: Dispose in accordance with federal, state, provincial, and local regulations. Regulations may also apply to empty containers. The responsibility for proper waste disposal lies with the owner of the waste. Contact Safety-Kleen regarding proper recycling or disposal.

USEPA WASTE CODE(S): D035, D001
Based on available data, this information applies to the product as supplied to the user. Processing, use, or contamination by the user may change the waste code(s) applicable to the disposal of this product.

SECTION 14: TRANSPORT INFORMATION

DOT: PAINT RELATED MATERIAL, 3, UN1263, PG II

TDG: Paint Related Material, Class 3, UN1263, PG II

EMERGENCY RESPONSE GUIDE NUMBER: 127
Reference *North American Emergency Response Guidebook*

SECTION 15: REGULATORY INFORMATION

USA REGULATIONS

SARA SECTIONS 302 AND 304: Based on the ingredients listed in **SECTION 2**, this product does not contain any "extremely hazardous substances" listed pursuant to Title III of the Superfund Amendments and Reauthorization Act of 1986 (SARA) Section 302 or Section 304 as identified in 40 CFR Part 355, Appendix A and B.

SARA SECTIONS 311 AND 312:

This product poses the following physical and health hazards as defined in 40 CFR Part 370 and is subject to the requirements of sections 311 and 312 of Title III of the Superfund Amendments and Reauthorization Act of 1986 (SARA):

Immediate (Acute) Health Hazard
Delayed (Chronic) Health Hazard
Fire Hazard

SARA SECTION 313:

The following components are subject to the requirements of section 313 of Title III of the Superfund Amendments and Reauthorization Act of 1986 (SARA) and 40 CFR Part 372.

Material	CAS
toluene	108-88-3
isopropanol	67-63-0
methyl ethyl ketone	78-93-3
methyl isobutyl ketone	108-10-1
xylene	1330-20-7
methanol	67-56-1

CERCLA:

Based on the ingredients listed in **SECTION 2**, this product contains the following "hazardous substances" listed under the Comprehensive Environmental Response, Compensation and Liability Act of 1980 (CERCLA) in 40 CFR Part 302, Table 302.4 with the following reportable quantities (RQ):

Material	CAS	RQ
toluene	108-88-3	1000 LB (450 kg)
acetone	67-64-1	5000 LB (2250 kg)
methyl ethyl ketone	78-93-3	5000 LB (2250 kg)
isobutyl acetate	110-19-0	5000 LB (2250 kg)
methyl isobutyl ketone	108-10-1	5000 LB (2250 kg)
xylene	1330-20-7	100 LB (45 kg)
methanol	67-56-1	5000 LB (2250 kg)

TSCA:

All the components of this product are listed on the TSCA Inventory.

CALIFORNIA:

This product may contain detectable amounts of benzene CAS 71-43-2 and methylene chloride CAS 75-09-2. WARNING: These chemicals are known to the State of California to cause cancer.

This product contains a detectable amount of toluene CAS 108-88-3 and may contain a detectable amount of benzene CAS 71-43-2. WARNING: These chemicals are known to the State of California to cause birth defects or other reproductive harm.

CANADIAN REGULATIONS
This product has been classified in accordance with the hazard criteria of the Controlled Products Regulations (CPR) and the MSDS contains all the information required by the CPR.

WHMIS: B2, D2B

CANADIAN ENVIRONMENTAL PROTECTION ACT (CEPA): All the components of this product are listed on the Canadian Domestic Substances List (DSL).

SECTION 16: OTHER INFORMATION

REVISION INFORMATION: Updated with Safety-Kleen Texas address, modified Medical Emergency phone number, modified Transportation Spill number and modified Technical Information phone number

LABEL/OTHER INFORMATION: This product is United States Department of Agriculture (USDA) approved and Underwriter's Laboratories (UL) classified.

User assumes all risks incident to the use of this product. To the best of our knowledge, the information contained herein is accurate. However, Safety-Kleen assumes no liability whatsoever for the accuracy or completeness of the information contained herein. No representations or warranties, either express or implied, or merchantability, fitness for a particular purpose or of any other nature are made hereunder with respect to information or the product to which information refers. The data contained on this sheet apply to the product as supplied to the user.

©2002 Printed in the USA.

SAFETY-KLEEN HEAVY DUTY LACQUER THINNER 6782

MATERIAL SAFETY DATA SHEET FOR USA AND CANADA

SECTION 1: PRODUCT AND COMPANY IDENTIFICATION

PRODUCT NAME: **SAFETY-KLEEN HEAVY DUTY LACQUER THINNER 6782**

SYNONYM(S): Not applicable.

PRODUCT PART NUMBER: 6782

PRODUCT USE: Paint gun cleaner.
If this product is used in combination with other products, refer to the Material Safety Data Sheets for those products.

24-HOUR EMERGENCY PHONE NUMBERS

These numbers are for emergency use only. If you desire non-emergency product information, please call a phone number listed below.

MEDICAL:	**TRANSPORTATION (SPILL):**
1-800-752-7869	**1-800-468-1760**

SUPPLIER: Safety-Kleen Corp.
5400 Legacy Drive
Cluster II, Building 3
Plano, Texas 75024
USA
1-800-669-5704

TECHNICAL INFORMATION: 1-800-669-5740, Press 1 then Extension 7500

MSDS FORM NUMBER: 82343 **ISSUE:** December 9, 2002

ORIGINAL ISSUE: July 20, 1989 **SUPERSEDES:** March 6, 2000

PREPARED BY: Product MSDS Coordinator **APPROVED BY:** MSDS Task Force

SECTION 2: COMPOSITION/INFORMATION ON INGREDIENTS

WT%	NAME	SYNONYM	CAS NO.	OSHA PEL TWA (ppm)	OSHA PEL STEL (ppm)	ACGIH TLV® TWA (ppm)	ACGIH TLV® STEL (ppm)	LD[a]	LC[b]
30-60	Toluene	Methylbenzene	108-88-3	200	300 (ceiling)	50 (skin)	N. Av.	636 (14100 ul/ kg[c])	49000 mg/ m^3/ 4 hours
0-60*	Methyl ethyl ketone	Butanone, 2-	78-93-3	200	N.Av.	200	300	2737 (6480 mg/ kg[c])	23500 mg/ m3/ 8 hours
0-60*	Methyl propyl ketone	2-Pentanone	107-87-9	200	N. Av.	200	250	1600 (6500 mg/ kg[c])	N. Av.
0-60*	Methyl isobutyl ketone	Hexone	108-10-1	100	N.Av.	50	75	2080 (>20 ml/ kg[c])	N. Av.
0-60*	2-Heptanone	Methyl n-amyl ketone	110-43-0	100	N.Av.	50	N.Av.	1670[g]	N.Av.
0-60*	C_5 to C_8 Aliphatic hydrocarbons	Low boiling hydrocarbons	64741-89-5	1000[h]	N. Av.	600[h]	N. Av.	N. Av.	364000 mg/ m^3/ 4 hours[h]
0-60*	C_9 to C_{13} Aliphatic hydrocarbons	Medium boiling hydrocarbons	8030-30-6	500[i]	N.Av.	100[i]	N.Av.	>5000[i]	>5500 mg/ m^3/ 4 hours[i]
0-30*	Ethylbenzene	Phenylethane	100-41-4	100	N.Av.	100	125	3500 (17800 ul/ kg[c])	N.Av.
0-20*	Acetone	Dimethyl ketone	67-64-1	1000	N.Av.	500	750	5800	50100 mg/ m^3/ 8 hours
0-17*	Iso-Propyl acetate	Acetoxypropane, 2-	108-21-4	250	N.Av.	100	200	6750 (>20 ml/ kg[c])	50000 mg/ m^3/ 8 hours
0-17*	Ethyl acetate	Acetic acid ethyl ester	141-78-6	400	N.Av.	400	N.Av.	5620 (>20 ml/ kg[c])	45000 mg/ m^3/ 2 hours
0-17*	Iso-Butyl acetate	Methyl propyl acetate, 2-	110-19-0	150	N.Av.	150	N.Av.	13400 (>17400 mg/ kg[c])	N. Av.
0-17*	N-Butyl acetate	Butyl ethanoate	123-86-4	150	N.Av.	150	200	10768 (>17600 mg/ kg[c])	2000 ppm/ 4 hours
0-17*	Propylene glycol methyl ether acetate	Methoxy-2-propanol acetate, 1-	108-65-6	100[d]	N.Av.	N.Av.	N.Av.	8532 (>5000 mg/ kg[c])	4345 ppm/ 6 hours
0-17*	Ethyl 3-ethoxypropionate	Ethyl beta-ethoxy propionate	763-69-9	50[f]	100[f]	N.Av.	N.Av.	4300	>1000 ppm/ 6 hours

OSHA PEL ACGIH TLV®

WT%	NAME	SYNONYM	CAS NO.	TWA (ppm)	STEL (ppm)	TWA (ppm)	STEL (ppm)	LD[a]	LC[b]
0-15*	Xylene	Dimethylbenzene	1330-20-7	100	N.Av.	100	150	4300 (>1700 mg/ kg[c])	5000 ppm/ 4 hours
0-10*	Ethyl alcohol	Ethanol	64-17-5	1000	N.Av.	1000	N.Av.	7060 (20000 mg/ kg[c])	20000 ppm/ 10 hours
0-10*	Iso-Propyl alcohol	Isopropanol	67-63-0	400	N.Av.	400[e]	500[e]	5045 (12800 mg/ kg[c])	16000 ppm/ 8 hours
0-10*	N-Butyl alcohol	Butanol	71-36-3	100	N. Av.	50[k] (skin) (ceiling)	N. Av.	790 (3400 mg/ kg[c])	8000 ppm/ 4 hours
0-10*	Tert-Butanol	Trimethylmethanol	75-65-0	100	N. Av.	100	N. Av.	3500	N. Av.
0-4*	Methyl alcohol	Methanol	67-56-1	200 (skin)	N.Av.	200 (skin)	250	5628 (15800 mg/ kg[c])	64000 ppm/ 4 hours
0-1*	1,1,1-Trichoroethane	Methyl chloroform	71-55-6	350	N.Av.	350	450	9600	18000 ppm/ 4 hours
0-1*	Methylene chloride	Dichloromethane	75-09-2	25	125 (15 minutes)	50	N.Av.	1600	N.Av.
0-1*	Perchloroethylene	Tetrachloroethylene	127-18-4	100	200 (ceiling)	25	100	2629 (>10000 mg/ kg[c])	34200 mg/ m3/ 8 hours

N.Av. = Not Available
* Even though the concentration range does not fall under the ranges prescribed by WHMIS, this is the actual range which varies with each batch of the product.

[a]Oral-Rat LD_{50} (mg/kg)
[b]Inhalation-Rat LC_{50}
[c]Skin-Rabbit LD_{50}
[d]AIHA recommended
[e]Notice of Intended Changes: 200 ppm TWA and 400 ppm STEL

[f]Manufacturer recommended.
[g]Skin-Rabbit LD_{50} 12.6 ml/kg
[h]Based on Pentane
[i]Based on Stoddard Solvent
[k]Notice of Intended Changes: 25 ppm (ceiling)

SECTION 3: HAZARDS IDENTIFICATION

EMERGENCY OVERVIEW

APPEARANCE
Liquid, clear and colorless, solvent odor.

WARNING!

PHYSICAL HAZARDS
Extremely flammable liquid and vapor.
Vapor may cause flash fire.

HEALTH HAZARDS
May be harmful if inhaled.
May irritate eyes.
May be harmful if absorbed through the skin.
May be harmful if swallowed.
Suspect cancer hazard. Contains material (maximum 1 WT%) which may cause cancer. Risk of cancer depends on duration and level of exposure.
Contains material which may cause birth defects.
Contains material which may cause heart, liver, kidney, brain, eye, and central nervous system damage.

POTENTIAL HEALTH EFFECTS

INHALATION (BREATHING): High vapor or mist concentrations may be harmful if inhaled. High concentrations of vapor or mist may irritate the respiratory tract (nose, throat, and lungs). High concentrations of vapor or mist may cause nausea, vomiting, headaches, dizziness, loss of coordination, numbness, irregular heartbeat, drowsiness, and other central nervous system effects. High concentrations of vapor or mist may cause liver or kidney damage. Massive acute overexposure may cause rapid central nervous system depression, sudden collapse, coma, and/or death.

EYES: May cause severe irritation tearing, redness, swelling, burns, and eye damage.

SKIN: May cause irritation leading to dermatitis or blistering. Toluene, methyl alcohol, and n-butyl alcohol may be absorbed through the skin and cause harm as noted under **INHALATION (BREATHING)**.

INGESTION (SWALLOWING): May be harmful if swallowed. May cause throat irritation, nausea, vomiting, diarrhea, and central nervous system effects as noted under **INHALATION (BREATHING)**. Breathing product into the lungs during ingestion or vomiting may cause lung injury and possible death.

MEDICAL CONDITIONS AGGRAVATED BY EXPOSURE: Individuals with pre-existing cardiovascular, liver, kidney, respiratory tract (nose, throat, and lungs), central nervous system, eye, and/or skin disorders may have increased susceptibility to the effects of exposure.

CHRONIC: Prolonged or repeated inhalation may cause heart, liver, central nervous system, and kidney damage; and/or toxic effects as noted under **INHALATION (BREATHING).** Prolonged or repeated eye contact may cause inflammation of the membrane lining the eyelids and covering the eyeball (conjunctivitis); burns, and/or eye damage. Prolonged or repeated skin contact may cause drying, cracking, redness, itching, and/or swelling (dermatitis); and/or blistering.

CANCER INFORMATION: This product contains methylene chloride and perchloroethylene which may cause cancer. Risk of cancer depends on duration and level of exposure. For more information, see **SECTION 11: CARCINOGENICITY**.

Also see **SECTION 15: CALIFORNIA**.

POTENTIAL ENVIRONMENTAL EFFECTS
Not available. Also see **SECTION 12: ECOLOGICAL INFORMATION.**

SECTION 4: FIRST AID MEASURES

INHALATION: (BREATHING) Remove to fresh air. If not breathing, give artificial respiration. If breathing is difficult, give oxygen. Oxygen should only be administered by qualified personnel. Someone should stay with victim. Get medical attention if breathing difficulty persists.

EYES: If irritation or redness from exposure to vapor develops, move away from exposure into fresh air. Upon contact, immediately flush eyes with plenty of lukewarm water, holding eyelids apart, for 15 minutes. Get medical attention.

SKIN: Remove affected clothing and shoes. Wash skin thoroughly with soap and water. Get medical attention if irritation or pain develops or persists.

INGESTION: (SWALLOWING) Do NOT induce vomiting. Immediately get medical attention. Call 1-800-752-7869 for additional information.
If spontaneous vomiting occurs, keep head below hips to avoid breathing the product into the lungs. Never give anything to an unconscious person by mouth.

NOTE TO PHYSICIANS: Treat symptomatically and supportively. Increased sensitivity of the heart to Adrenaline (epinephrine) may be caused by overexposure to product. Administration of gastric lavage, if warranted, should be performed by qualified medical personnel. Treatment may vary with condition of victim and specifics of incident. Call 1-800-752-7869 for additional information.

SECTION 5: FIRE FIGHTING MEASURES

FLASH POINT: less than 70°F (21°C) Tag Closed Cup

FLAMMABLE LIMITS IN AIR: **LOWER:** 1 VOL% (approximately)
UPPER: 13 VOL% (approximately)

AUTOIGNITION TEMPERATURE: 800°F (427°C) (approximately)

HAZARDOUS COMBUSTION PRODUCTS: Decomposition and combustion materials may be toxic. Burning may produce phosgene, chlorides, chloroacetylenes, formaldehyde, peracetic acid, carbon monoxide, and unidentified organic compounds.

CONDITIONS OF FLAMMABILITY: Heat, sparks, or flame.

EXTINGUISHING MEDIA: Carbon dioxide, alcohol-resistant foam, dry chemical, or water spray.

NFPA 704 HAZARD IDENTIFICATION: This information is intended solely for the use by individuals trained in this system.

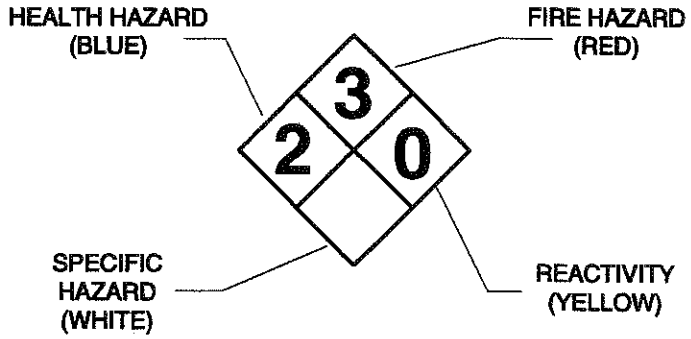

FIRE FIGHTING INSTRUCTIONS: Keep storage containers cool with water spray.
A positive-pressure, self-contained breathing apparatus (SCBA) and full-body protective equipment are required for fire emergencies.

FIRE AND EXPLOSION HAZARDS: Vapor explosion hazard indoors, outdoors, or in sewers. Vapors may travel to ignition source and flashback. Vapors will spread along the ground and collect in low or confined areas. Run-off to sewer may create a fire or explosion hazard. Heated containers may rupture, explode, or be thrown into the air. "Empty" containers may retain residue and can be dangerous. Not sensitive to mechanical impact. Product may be sensitive to static discharge, which could result in fire or explosion.

SECTION 6: ACCIDENTAL RELEASE MEASURES

Remove all ignition sources. Do not touch or walk through spilled product. Stop leak if you can do it without risk. Wear protective equipment and provide engineering controls as specified in **SECTION 8: EXPOSURE CONTROLS/PERSONAL PROTECTION**. Isolate hazard area. Keep unnecessary and unprotected personnel from entering. Ventilate area and avoid breathing vapor or mist. A vapor suppressing foam may be used to reduce vapors. Contain spill away from surface waters and sewers. Contain spill as a liquid for possible recovery or sorb with compatible sorbent material and shovel with a clean, sparkproof tool into a sealable container for disposal.

Additionally, for large spills: Water spray may reduce vapor, but may not prevent ignition in closed spaces. Dike far ahead of liquid spill for collection and later disposal.

There may be specific federal regulatory reporting requirements associated with spills, leaks, or releases of this product. Also see **SECTION 15: REGULATORY INFORMATION.**

SECTION 7: HANDLING AND STORAGE

HANDLING: Keep away from heat, sparks, or flame. Where flammable mixtures may be present, equipment safe for such locations should be used. Use clean, sparkproof tools and explosion-proof equipment. When transferring product, metal containers, including trucks and tank cars, should be grounded and bonded. Do not breathe vapor or mist. Use in a well ventilated area. Avoid contact with eyes, skin, clothing, and shoes. Do not smoke while using this product.

SHIPPING AND STORING: Keep container tightly closed when not in use and during transport. Store containers in a cool place. Do not pressurize, cut, weld, braze, solder, drill, or grind containers. Keep containers away from heat, flame, sparks, static electricity, or other sources of ignition; containers may explode and cause injury or death. Empty product containers may retain product residue and can be dangerous. See **SECTION 14: TRANSPORT INFORMATION** for Packing Group information.

SECTION 8: EXPOSURE CONTROLS/PERSONAL PROTECTION

ENGINEERING CONTROLS: Provide general ventilation needed to maintain concentration of vapor or mist below applicable exposure limits. Where adequate general ventilation is unavailable, use process enclosures, local exhaust ventilation, or other engineering controls to control airborne levels below recommended exposure limits. Where explosive mixtures may be present, equipment safe for such locations should be used.

PERSONAL PROTECTIVE EQUIPMENT

RESPIRATORY PROTECTION: Use NIOSH-certified, air-supplied respirators (self-contained breathing apparatus) or air-line when concentrations of methanol or methylene chloride may exceed applicable exposure limits. Use NIOSH-certified, full-face respirators with organic vapor cartridges respiratory protective equipment when concentration of vapor or mist of any of the other components exceeds applicable exposure limits. Selection and use of respiratory protective equipment should be in accordance in the USA with OSHA General Industry Standard 29 CFR 1910.134; or in Canada with CSA Standard Z94.4.

EYE PROTECTION: Where eye contact is likely, wear chemical goggles; contact lens use is not recommended.

SKIN PROTECTION: Where skin contact is likely, wear Viton®, polyvinyl alcohol (PVA), laminate, or equivalent protective gloves; use of natural rubber (latex), polyvinyl chloride (PVC), neoprene, or equivalent gloves is not recommended.

To avoid prolonged or repeated contact where spills and splashes are likely, wear appropriate chemical-resistant faceshield, boots, apron, whole body suits, or other protective clothing.

PERSONAL HYGIENE: Use good personal hygiene. Wash thoroughly with soap and water after handling product and before eating, drinking, or using tobacco products. Clean affected clothing, shoes, and protective equipment before reuse. Discard affected clothing, shoes, or protective equipment if they cannot be thoroughly cleaned. Discard leather articles, such as shoes, saturated with the product.

OTHER PROTECTIVE EQUIPMENT: Where spills and splashes are likely, facilities storing or using this product should be equipped with an emergency eyewash and shower, both equipped with clean water, in the immediate work area.

SECTION 9: PHYSICAL AND CHEMICAL PROPERTIES

PHYSICAL STATE, APPEARANCE, AND ODOR:	Liquid, clear and colorless, solvent odor.
ODOR THRESHOLD:	Not available.
MOLECULAR WEIGHT:	Not available.
SPECIFIC GRAVITY:	0.83 (water = 1) (approximately)
DENSITY:	6.9 lb/US gal (830 g/l) (approximately)
VAPOR DENSITY:	2.2 to 3.9 (air = 1) (approximately)
VAPOR PRESSURE:	86 mm Hg at 68°F (20°C) 205 mm Hg at 100°F (38°C)
BOILING POINT:	133° to 342°F (56° to 172°C)
FREEZING/MELTING POINT:	-200° to -8° F (-129° to -22° C)
pH:	Not applicable.
EVAPORATION RATE:	3.7 (butyl acetate = 1) (based on a similar product)
SOLUBILITY IN WATER:	Slight.
FLASH POINT:	less than 70°F (21°C) Tag Closed Cup
FLAMMABLE LIMITS IN AIR:	**LOWER:** 1 VOL% (approximately) **UPPER:** 13 VOL% (approximately)
AUTOIGNITION TEMPERATURE:	800°F (427°C)

SECTION 10: STABILITY AND REACTIVITY

STABILITY:	Stable under normal temperatures and pressures. Avoid heat, sparks, or flame.
INCOMPATIBILITY:	Avoid acids, alkalies, oxidizing agents, reducing agents, reactive halogens, or reactive metals.

REACTIVITY: Polymerization is not known to occur under normal temperatures and pressures. Not reactive with water.

HAZARDOUS DECOMPOSITION PRODUCTS: None under normal temperatures and pressures. See also **SECTION 5: HAZARDOUS COMBUSTION PRODUCTS.**

SECTION 11: TOXICOLOGICAL INFORMATION

SENSITIZATION: Based on best current information, there is no known human sensitization associated with this product.

MUTAGENICITY: Perchloroethylene has demonstrated human effects of mutagenicity. Toluene, xylene, ethylbenzene, ethyl alcohol, isopropyl alcohol, methyl alcohol, ethyl acetate, 1,1,1-trichloroethane, and methylene chloride have demonstrated experimental effects of mutagenicity.

Based on best current information, the other components listed in **SECTION 2** are not mutagens.

CARCINOGENICITY: Methylene chloride is regulated by OSHA as a carcinogen. Perchloroethylene is categorized by IARC as probably carcinogenic to humans (Group 2A). Methylene chloride is categorized by IARC as possibly carcinogenic to humans (Group 2B). Perchloroethylene and methylene chloride are listed by NTP as having limited evidence of carcinogenicity in humans or sufficient evidence of carcinogenicity in experimental animals.

Ethylbenzene (under the Notice of Intended Changes), methylene chloride, and perchloroethylene are categorized by ACGIH as confirmed animal carcinogens with unknown relevance to humans (A3). These agents are carcinogenic in experimental animals at a relatively high dose, by route(s) of administration, at site(s), of histologic type(s), or by mechanism(s) that may not be relevant to worker exposure. Available epidemiologic studies do not confirm an increased risk of cancer in exposed humans. Available evidence does not suggest that the agents are likely to cause cancer in humans except under uncommon or unlikely routes or levels of exposure.

There is at least one valid, positive study indicating the carcinogenic potential of tert-butanol in animals.

Based on best current information, the other components listed in **SECTION 2** are not carcinogens.

Also see **SECTION 3: CANCER INFORMATION** and **SECTION 15: CALIFORNIA.**

REPRODUCTIVE TOXICITY: Ethylbenzene has demonstrated animal effects of reproductive toxicity. Xylene, toluene, methyl ethyl ketone, isopropyl alcohol, methyl alcohol, ethyl alcohol, perchloroethylene, 1,1,1-trichloroethane, and methylene chloride have demonstrated experimental effects of reproductive toxicity.

Based on best current information, the other components listed in **SECTION 2** are not reproductive toxicants.

Also see **SECTION 15: CALIFORNIA.**

TERATOGENICITY: Ethylbenzene has demonstrated animal effects of teratogenicity. Toluene, ethyl alcohol, methyl ethyl ketone, N-butyl acetate, isopropyl alcohol, methyl alcohol, n-butyl alcohol, perchloroethylene, and 1,1,1-trichloroethane have demonstrated experimental effects of teratogenicity.

Based on best current information, the other components listed in **SECTION 2** are not teratogens.

TOXICOLOGICALLY SYNERGISTIC PRODUCT(S): Based on best current information, there are no known toxicologically synergistic products associated with this product.

SECTION 12: ECOLOGICAL INFORMATION

ECOTOXICITY: Not available.

OCTANOL/WATER PARTITION COEFFICIENT: Not available.

VOLATILE ORGANIC COMPOUNDS: 80 to 100 WT%; 5.5 to 6.9 lb/US gal; 664 to 830 g/l (approx.) As per 40 CFR Part 51.100(s).

SECTION 13: DISPOSAL CONSIDERATIONS

DISPOSAL: Dispose in accordance with federal, state, provincial, and local regulations. Regulations may also apply to empty containers. The responsibility for proper waste disposal lies with the owner of the waste. Contact Safety-Kleen regarding recycling or proper disposal.

USEPA WASTE CODE(S): D001, D018, D035, D039
Based on available data, this information applies to the product as supplied to the user. Processing, use, or contamination by the user may change the waste code(s) applicable to the disposal of this product.

SECTION 14: TRANSPORT INFORMATION

DOT: PAINT RELATED MATERIAL, 3, UN1263, PGII

TDG: Paint Related Material, Class 3, UN1263, PGII

EMERGENCY RESPONSE GUIDE NUMBER: 127
Reference *North American Emergency Response Guidebook*

SECTION 15: REGULATORY INFORMATION

USA REGULATIONS

SARA SECTIONS 302 AND 304: Based on the ingredients listed in **SECTION 2**, this product does not contain any "extremely hazardous substances" listed pursuant to Title III of the Superfund Amendments and Reauthorization Act of 1986 (SARA) Section 302 or Section 304 as identified in 40 CFR Part 355, Appendix A and B.

SARA SECTIONS 311 AND 312: This product poses the following physical and health hazards as defined in 40 CFR Part 370 and is subject to the requirements of sections 311 and 312 of Title III of the Superfund Amendments and Reauthorization Act of 1986 (SARA):
- Immediate (Acute) Health Hazard
- Delayed (Chronic) Health Hazard
- Fire Hazard

SARA SECTION 313: The following components are subject to the requirements of section 313 of Title III of the Superfund Amendments and Reauthorization Act of 1986 (SARA) and 40 CFR Part 372.

Material	CAS
Methyl isobutyl ketone	108-10-1
Toluene	108-88-3
Methyl ethyl ketone	78-93-3
Xylene	1330-20-7
Ethylbenzene	100-41-4
Methyl alcohol	67-56-1
N-Butyl alcohol	71-36-3
Tert-Butanol	75-65-0
1,1,1-Trichloroethane	71-55-6

Material	CAS
Methylene chloride	75-09-2

Perchloroethylene	127-18-4
Under the glycol ethers category:	
Propylene glycol methyl ether acetate	108-65-6

CERCLA: Based on the ingredients listed in **SECTION 2**, this product contains the following "hazardous substances" listed under the Comprehensive Environmental Response, Compensation and Liability Act of 1980 (CERCLA) in 40 CFR Part 302, Table 302.4 with the following reportable quantities (RQ):

Material	CAS	RQ
Iso-butyl acetate	110-19-0	5000 LB (2270 kg)
N-Butyl acetate	123-86-4	5000 LB (2270 kg)
Methyl isobutyl ketone	108-10-1	5000 LB (2270 kg)
Toluene	108-88-3	1000 LB (454 kg)
Methyl ethyl ketone	78-93-3	5000 LB (2270 kg)
Xylene	1330-20-7	100 LB (45.4 kg)
Ethylbenzene	100-41-4	1000 LB (454 kg)
Acetone	67-64-1	5000 LB (2270 kg)
Methyl alcohol	67-56-1	5000 LB (2270 kg)
N-Butyl alcohol	71-36-6	5000 LB (2270 kg)
Ethyl acetate	141-78-6	5000 LB (2270 kg)
1,1,1-Trichloroethane	71-55-6	1000 LB (454 kg)
Methylene chloride	75-09-2	1000 LB (454 kg)
Perchloroethylene	127-18-4	100 LB (45.4 kg)

TSCA: All the components of this product are listed on the TSCA Inventory.

CALIFORNIA: This product contains detectable amounts of benzene CAS 71-43-2, methylene chloride CAS 75-09-2, and perchloroethylene CAS 127-18-4. WARNING: These chemicals are known to the State of California to cause cancer.

This product contains detectable amounts of benzene CAS 71-43-2 and toluene CAS 108-88-3 WARNING: These chemicals are known to the State of California to cause birth defects or other reproductive harm.

CANADIAN REGULATIONS

This product has been classified in accordance with the hazard criteria of the Controlled Products Regulations (CPR) and the MSDS contains all the information required by the CPR.

WHMIS: B2, D1A, D1B, D2A, D2B

CANADIAN ENVIRONMENTAL PROTECTION ACT (CEPA): All the components of this product are listed on the Canadian Domestic Substances List (DSL).

SECTION 16: OTHER INFORMATION

REVISION INFORMATION: Updated with Safety-Kleen Texas address, modified Medical Emergency phone number, modified Transportation Spill number and modified Technical Information phone number.

LABEL/OTHER INFORMATION: This product is United States Department of Agriculture (USDA) approved and Underwriter's Laboratories(UL) classified.

User assumes all risks incident to the use of this product. To the best of our knowledge, the information contained herein is accurate. However, Safety-Kleen assumes no liability whatsoever for the accuracy or completeness of the information contained herein. No representations or warranties, either express or implied, or merchantability, fitness for a particular purpose or of any other nature are made hereunder with respect to information or the product to which information refers. The data contained on this sheet apply to the product as supplied to the user.

©2002 Printed in the USA.

Exhibit G-2
Emergency Information

SAFETY-KLEEN EMERGENCY INFORMATION

Facility Emergency Coordinator

Name:	**Eric Rombach**
Home Add:	**712 Green Street**
	Ottawa, IL 61350
Home Tel:	**(815) 431-9110**
Office Tel:	**(309) 346-1818**
Pager:	**(800) 602-2948**

Facility First Alternate Coordinator

Name:	**Randy Smith**
Home Add:	**215 Lawnbridge**
	Creve Coeur, IL 61610
Home Tel:	**(309) 694-4142**
Office Tel:	**(309) 346-1818**
Pager:	**(800) 602-2946**

Facility Second Alternate Coordinator

Name:	**Darrell Neville**
Home Add:	**1208 S. Capitol Street**
	Pekin, IL 61554
Home Tel:	**(309) 346-8296**
Work Tel:	**(309) 346-1818**
Pager:	**(800) 602-2944**

Emergency Notification Telephone Numbers:

Safety-Kleen Emergency Response Incident Reporting (24-hour Emergency Number)	**(800) 468-1760**
National Response Center (24-hour Emergency Number)	**(800) 424-8802**
Cincinnati Township Fire Protection District	**911 or 348-3070**
Pekin Police Department	**911 or 346-3132**
Tazwell County Sheriff	**911 or 346-4141**
Pekin Memorial Hospital	**(309) 347-1151**
AMT Ambulance	**911**
Illinois Emergency Management Agency	**(800) 782-7860**
Qualified Emergency Responder	**(800) 468-1760**

TO USE PA SYSTEM: DIAL (INTERCOM 6)

Revised 9-16-02

Exhibit G-3
Employee Functions During An Emergency

Exhibit G-3
EMPLOYEES' FUNCTION DURING AN EMERGENCY

Title	**Emergency Function**
Branch Manager	Emergency coordinator Apply first aid Notify: Environmental department Engineering department Emergency agencies (as needed)
Branch Secretary	Alternate emergency coordinator Supervise evacuation
Sales Representative	Retain, contain or slow the flow of material
Warehouseman	Shut off electricity

Exhibit G-4
Standard Operating Procedures

Exhibit G-4
STANDARD OPERATING PROCEDURES

Potential Confined Space Entry/Clean-up

Area should be tested for oxygen content either by

a) an employee in level B, air supply respiratory protection, should test the oxygen content in the area to insure that it is acceptable, 18-21%

b) the use of a remote oxygen sensor to verify an acceptable oxygen content

It shall be determined that the air testing method chosen is appropriate for the potential airborne contaminant prior to testing and clearance of an area.

There shall be no use of cartridge (air purifying) respirators without determination of the chemical contaminant(s) present and approximate knowledge of the concentration(s).

Potentially Unsafe Acts

- Use of electrical equipment in the area of a spill of any liquid or semi-solid waste.
- Entry into any contained, uncharacterized area of spilled material where the means of egress is limited.
- Any act not advised by or approved of by the Emergency Coordinator.

Exhibit G-5
Notifications To Local Authorities

safety-kleen®

CERTIFIED MAIL 7001 2510 0001 5996 7159
RETURN RECEIPT REQUESTED

September 17, 2002

Ms. Mary Riegle
Illinois Environmental Protection Agency
Division of Land Pollution Control, Permit Section
1021 North Grand Avenue East
Springfield, Illinois 62794

Re: Part B Permit
Pekin Illinois Service Center
ILD093862811

Dear Ms. Riegle:

This submittal constitutes notice of a Class 1 permit modification under 35Ill. Adm. Code 703. This modification is necessary to update the contingency plan information within the Permit Application. Safety-Kleen Systems, Inc. has determined this to be a class 1 modification according to 35 Ill. Adm. Code 703. Appendix A, B.6.d. The revision is detailed below.

CONTINGENCY PLAN
Appendix G. Table G-1
Emergency Information: The emergency coordinator information sheet has been updated to reflect a change in the Emergency Coordinator information. The effective date of the change was September 16, 2002.

As required under 40 CFR 270.42 (a)(ii), all parties on the facility mailing list will be notified of the modification. Also, copies of the revised emergency coordinator information sheet have been sent to the local hospital, police department, fire department, sheriff's department, ambulance service, state emergency response agency, and environmental contractor. Copies of these letters are enclosed. If you have any questions, or require any additional information, please contact Mr. Kevin Farmer at (573) 335-3461.

I certify under penalty of law that this document and all attachments were prepared under my direction or supervision in accordance with a system designed to assure that qualified personnel properly gather and evaluate the information submitted. Based on my inquiry of the person or persons who manage the system, or those persons directly responsible for gathering the information, the information submitted is, to the best of my knowledge and belief, true, accurate, and complete. I am aware that there are significant penalties for submitting false information, including the possibility of fine and imprisonment for knowing violations.

Sincerely,

Eric Rombach
Branch Manager

SAFETY-KLEEN EMERGENCY INFORMATION

Facility Emergency Coordinator

Name:	**Eric Rombach**
Home Add:	**712 Green Street**
	Ottawa, IL 61350
Home Tel:	**(815) 431-9110**
Office Tel:	**(309) 346-1818**
Pager:	**(800) 602-2948**

Facility First Alternate Coordinator

Name:	**Randy Smith**
Home Add:	**215 Lawnbridge**
	Creve Coeur, IL 61610
Home Tel:	**(309) 694-4142**
Office Tel:	**(309) 346-1818**
Pager:	**(800) 602-2946**

Facility Second Alternate Coordinator

Name:	**Darrell Neville**
Home Add:	**1208 S. Capitol Street**
	Pekin, IL 61554
Home Tel:	**(309) 346-8296**
Work Tel:	**(309) 346-1818**
Pager:	**(800) 602-2944**

Emergency Notification Telephone Numbers:

Safety-Kleen Emergency Response Incident Reporting (24-hour Emergency Number)	**(800) 468-1760**
National Response Center (24-hour Emergency Number)	**(800) 424-8802**
Cincinnati Township Fire Protection District	**911 or 348-3070**
Pekin Police Department	**911 or 346-3132**
Tazwell County Sheriff	**911 or 346-4141**
Pekin Memorial Hospital	**(309) 347-1151**
AMT Ambulance	**911**
Illinois Emergency Management Agency	**(800) 782-7860**
Qualified Emergency Responder	**(800) 468-1760**

TO USE PA SYSTEM: DIAL (INTERCOM 6) **Revised 9-16-02**

safety-kleen®

CERTIFIED MAIL 7001 2510 0001 5996 ~~7128~~ 7074
RETURN RECEIPT REQUESTED

September 16, 2002

Mr. Thomas F. Goin, Jr.
Illinois Emergency Management Agency
110 East Adams Street
Springfield, Illinois 62701-1109

SUBJECT: Part B Permit (Contingency Plan)
Pekin Illinois Service Center
ILD093862811

Dear Sir:

Enclosed is the completed Chemical Safety Act Compliance Form for Safety-Kleen's Pekin Service Center. This form was completed due to a change in the second alternate coordinator in relation to the facility's contingency plan as outlined by the facility's Part B permit.

If you have any questions or require additional information, please call me at 573-335-3461.

Sincerely,

Kevin Farmer

Kevin Farmer
Environmental Compliance Manager
Central Division

encl.

14249 V.F.W. ROAD PEKIN, IL 61554 309/346-1818

PRINTED ON RECYCLED PAPER

ILLINOIS EMERGENCY MANAGEMENT AGENCY

CHEMICAL SAFETY ACT COMPLIANCE FORM

1. Name of Facility: Safety-Kleen Systems, Inc.

2. Address of Facility: 14249 VFW Road

Pekin, IL 61554 Tazwell (County)

3. Standard Industrial Classification Code (SIC) Code: 7389

4. Number of Employees: 18

5. Contact Person: Kevin Farmer Phone: 573-335-3461

6. Date in which your facility's Chemical Safety Contingency Plan was. . .

☐ finalized ☒ revised: 9-16-02

7. Name and address of Local Government Emergency Agencies and any other organization(s) where a copy of your facility's Chemical Safety Contingency Plan is officially filed (use additional sheets if necessary):

Planning Agency: Illinois Emergency Management Agency

Address: 100 East Adams Springfield, IL 62701

Date filed: Revised

Response Agency: 3-E Company

Address: 1905 Aston Avenue Carlsbad, CA 92008

Date filed: Revised

Other: Pekin Memorial Hospital

Address: 600 South 13th Street Pekin, IL 61554

Date filed: Revised

I certify that the above information is true, accurate and complete.

Kevin Farmer
Name (Please Print)

Kevin Farmer
Signature

9-16-02
Date

Environmental, Health & Safety Manager
Title

Required Response Notice: Information required by this form must be provided to comply with Public Act 84-652, "Illinois Chemical Safety Act." Failure to so provide may result in a civil penalty not to exceed $10,000 per violation, and an additional civil penalty not to exceed $1,000 for each day during which such violation continues.

Printed on Recycled Paper

ILLINOIS EMERGENCY MANAGEMENT AGENCY

CHEMICAL SAFETY ACT COMPLIANCE FORM

1. Name of Facility: Safety-Kleen Systems, Inc.

2. Address of Facility: 14249 VFW Road

Pekin, IL 61554 Tazwell (County)

3. Standard Industrial Classification Code (SIC) Code: 7389

4. Number of Employees: 18

5. Contact Person: Kevin Farmer Phone: 573-335-3461

6. Date in which your facility's Chemical Safety Contingency Plan was. . .

☐ finalized ☒ revised: 9-16-02

7. Name and address of Local Government Emergency Agencies and any other organization(s) where a copy of your facility's Chemical Safety Contingency Plan is officially filed (use additional sheets if necessary):

Planning Agency: Tazwell County Emergency Planning Committee

Address: 334 Elisabeth Street Pekin, IL 61554

Date filed: Revised

Response Agency: Pekin Police Department

Address: 400 Margaret Street Pekin, IL 61554

Date filed: Revised

Other: Pekin Fire Department

Address: 3232 Court Street Pekin, IL 61554

Date filed: Revised

I certify that the above information is true, accurate and complete.

Kevin Farmer
Name (Please Print)

Kevin Farmer
Signature

9-16-02
Date

Environmental, Health & Safety Manager
Title

Required Response Notice: Information required by this form must be provided to comply with Public Act 84-852, "Illinois Chemical Safety Act." Failure to so provide may result in a civil penalty not to exceed $10,000 per violation, and an additional civil penalty not to exceed $1,000 for each day during which such violation continues.

Printed on Recycled Paper

ILLINOIS EMERGENCY MANAGEMENT AGENCY

CHEMICAL SAFETY ACT COMPLIANCE FORM

1. Name of Facility: Safety-Kleen Systems, Inc.

2. Address of Facility: 14249 VFW Road

Pekin, IL 61554 — Tazwell (County)

3. Standard Industrial Classification Code (SIC) Code: 7389

4. Number of Employees: 18

5. Contact Person: Kevin Farmer Phone: 573-335-3461

6. Date in which your facility's Chemical Safety Contingency Plan was. . .

☐ finalized ☒ revised: 9-16-02

7. Name and address of Local Government Emergency Agencies and any other organization(s) where a copy of your facility's Chemical Safety Contingency Plan is officially filed (use additional sheets if necessary):

Planning Agency: _____

Address: _____

Date filed: _____

Response Agency: Cincinnati Township Fire Protection District

Address: 11751 Wagonsheller Road Pekin, IL 61554

Date filed: Revised

Other: Tazwell County Sheriff's Department

Address: 11 South 4th Street Pekin, IL 61554

Date filed: Revised

I certify that the above information is true, accurate and complete.

Kevin Farmer — Name (Please Print)

Kevin Farmer — Signature

9-16-02 — Date

Evironmental, Health & Safety Manager — Title

Required Response Notice: Information required by this form must be provided to comply with Public Act 84-652, "Illinois Chemical Safety Act." Failure to so provide may result in a civil penalty not to exceed $10,000 per violation, and an additional civil penalty not to exceed $1,000 for each day during which such violation continues.

IL 588-0080 (Rev. 8/91)

Printed on Recycled Paper

safety-kleen®

CERTIFIED MAIL 7001 2510 0001 5996 7098
RETURN RECEIPT REQUESTED

September 16, 2002

Chief Curto
Cincinnati Township Fire Protection District
11751 Wagonsheller Road
Pekin, IL 61554

Subject: Contingency Plan Revision
Safety-Kleen Systems, Inc.
14249 VFW Road
Pekin, IL 61554

Dear Chief Curto:

As required under 35 ILL. Adm. Code 724.153(b), all revisions to a hazardous waste management facility's contingency plan must be provided to your office. Enclosed is a copy of Safety-Kleen – Pekin's updated emergency coordinators list (Table G-1). If you do not have a copy of Safety-Kleen's contingency plan in your files, please indicate this on the attached response letter and a copy will be sent to you.

Please forward the response letter back to me at the address shown on the response letter as soon as possible. Your return of the attached response letter will be greatly appreciated. Safety-Kleen is required by law to keep documentation of your acceptance or refusal to enter into an emergency preparedness agreement.

If you have any questions or desire to visit the facility, please contact Mr. Eric Rombach, Branch General Manager at 309-346-1818.

Sincerely,

Kevin Farmer

Kevin Farmer
Environmental Compliance Manager
Central Division

AGREEMENT/ REFUSAL LETTER

Date: _____

To: Mr. Kevin Farmer
Safety-Kleen Systems, Inc.
201 LaSalle Street
Cape Girardeau, MO 63701

From: Chief Curto
Cincinnati Township Fire Protection District
11751 Wagonsheller Road
Pekin, IL 61554

Subject: Contingency Plan Revision
Pekin, Illinois Service Center

Dear Mr. Farmer:

This is to acknowledge receipt of the updated information for Safety-Kleen – Pekin's Contingency Plan. The revised page(s) have been incorporated into our copy of the plan.

(Please check one)

____ The full plan has been reviewed and this agency will act in accordance with the plan, should an emergency situation occur.

____ The full plan has been reviewed and this agency declines to enter into an agreement to assist in an emergency at the Pekin, Illinois Service Center.

_____
(Name - Please Print)

_____
(Signature)

_____
(Official Title)

_____ I am requesting a new copy of the plan.

safety-kleen ®

CERTIFIED MAIL 7001 2510 0001 5996 7104
RETURN RECEIPT REQUESTED

September 16, 2002

Fire Chief
Pekin Fire Department
3232 Court Street
Pekin, IL 61554

Subject: Contingency Plan Revision
Safety-Kleen Systems, Inc.
14249 VFW Road
Pekin, IL 61554

Dear Chief:

As required under 35 ILL. Adm. Code 724.153(b), all revisions to a hazardous waste management facility's contingency plan must be provided to your office. Enclosed is a copy of Safety-Kleen – Pekin's updated emergency coordinators list (Table G-1). If you do not have a copy of Safety-Kleen's contingency plan in your files, please indicate this on the attached response letter and a copy will be sent to you.

Please forward the response letter back to me at the address shown on the response letter as soon as possible. Your return of the attached response letter will be greatly appreciated. Safety-Kleen is required by law to keep documentation of your acceptance or refusal to enter into an emergency preparedness agreement.

If you have any questions or desire to visit the facility, please contact Mr. Eric Rombach, Branch General Manager at 309-346-1818.

Sincerely,

Kevin Farmer

Kevin Farmer
Environmental Compliance Manager
Central Division

AGREEMENT/ REFUSAL LETTER

Date: _____

To: Mr. Kevin Farmer
Safety-Kleen Systems, Inc.
201 LaSalle Street
Cape Girardeau, MO 63701

From: Fire Chief
Pekin Fire Department
3232 Court Street
Pekin, IL 61554

Subject: Contingency Plan Revision
Pekin, Illinois Service Center

Dear Mr. Farmer:

This is to acknowledge receipt of the updated information for Safety-Kleen – Pekin's Contingency Plan. The revised page(s) have been incorporated into our copy of the plan.

(Please check one)

____ The full plan has been reviewed and this agency will act in accordance with the plan, should an emergency situation occur.

____ The full plan has been reviewed and this agency declines to enter into an agreement to assist in an emergency at the Pekin, Illinois Service Center.

_____
(Name - Please Print)

_____
(Signature)

_____
(Official Title)

_____ I am requesting a new copy of the plan.

safety-kleen®

CERTIFIED MAIL 7001 2510 0001 5996 7128
RETURN RECEIPT REQUESTED

September 16, 2002

Tazwell County Sheriff's Department
11 South 4th Street
Pekin, IL 61554

Subject: Contingency Plan Revision
Safety-Kleen Systems, Inc.
14249 VFW Road
Pekin, IL 61554

Dear Sir or Madam:

As required under 35 ILL. Adm. Code 724.153(b), all revisions to a hazardous waste management facility's contingency plan must be provided to your office. Enclosed is a copy of Safety-Kleen – Pekin's updated emergency coordinators list (Table G-1). If you do not have a copy of Safety-Kleen's contingency plan in your files, please indicate this on the attached response letter and a copy will be sent to you.

Please forward the response letter back to me at the address shown on the response letter as soon as possible. Your return of the attached response letter will be greatly appreciated. Safety-Kleen is required by law to keep documentation of your acceptance or refusal to enter into an emergency preparedness agreement.

If you have any questions or desire to visit the facility, please contact Mr. Eric Rombach, Branch General Manager at 309-346-1818.

Sincerely,

Kevin Farmer

Kevin Farmer
Environmental Compliance Manager
Central Division

AGREEMENT/ REFUSAL LETTER

Date: _____

To: Mr. Kevin Farmer
Safety-Kleen Systems, Inc.
201 LaSalle Street
Cape Girardeau, MO 63701

From: Tazwell County Sheriff's Department
11 South 4th Street
Pekin, IL 61554

Subject: Contingency Plan Revision
Pekin, Illinois Service Center

Dear Mr. Farmer:

This is to acknowledge receipt of the updated information for Safety-Kleen – Pekin's Contingency Plan. The revised page(s) have been incorporated into our copy of the plan.

(Please check one)

____ The full plan has been reviewed and this agency will act in accordance with the plan, should an emergency situation occur.

____ The full plan has been reviewed and this agency declines to enter into an agreement to assist in an emergency at the Pekin, Illinois Service Center.

_____
(Name - Please Print)

_____
(Signature)

_____
(Official Title)

_____ I am requesting a new copy of the plan.

safety-kleen®

CERTIFIED MAIL 7001 2510 0001 5996 7142
RETURN RECEIPT REQUESTED

September 16, 2002

3E Company
1905 Aston Avenue
Carlsbad, CA 92008

Subject: Contingency Plan Revision
Safety-Kleen Systems, Inc.
14249 VFW Road
Pekin, IL 61554

Dear Sir or Madam:

As required under 35 ILL. Adm. Code 724.153(b), all revisions to a hazardous waste management facility's contingency plan must be provided to your office. Enclosed is a copy of Safety-Kleen – Pekin's updated emergency coordinators list (Table G-1). If you do not have a copy of Safety-Kleen's contingency plan in your files, please indicate this on the attached response letter and a copy will be sent to you.

Please forward the response letter back to me at the address shown on the response letter as soon as possible. Your return of the attached response letter will be greatly appreciated. Safety-Kleen is required by law to keep documentation of your acceptance or refusal to enter into an emergency preparedness agreement.

If you have any questions or desire to visit the facility, please contact Mr. Eric Rombach, Branch General Manager at 309-346-1818.

Sincerely,

Kevin Farmer

Kevin Farmer
Environmental Compliance Manager
Central Division

AGREEMENT/ REFUSAL LETTER

Date: _____

To: Mr. Kevin Farmer
Safety-Kleen Systems, Inc.
201 LaSalle Street
Cape Girardeau, MO 63701

From: 3E Company
1905 Aston Avenue
Carlsbad, CA 92008

Subject: Contingency Plan Revision
Pekin, Illinois Service Center

Dear Mr. Farmer:

This is to acknowledge receipt of the updated information for Safety-Kleen – Pekin's Contingency Plan. The revised page(s) have been incorporated into our copy of the plan.

(Please check one)

____ The full plan has been reviewed and this agency will act in accordance with the plan, should an emergency situation occur.

____ The full plan has been reviewed and this agency declines to enter into an agreement to assist in an emergency at the Pekin, Illinois Service Center.

_____
(Name - Please Print)

_____
(Signature)

_____
(Official Title)

_____ I am requesting a new copy of the plan.

safety-kleen®

CERTIFIED MAIL 7001 2510 0001 5996 7081
RETURN RECEIPT REQUESTED

September 16, 2002

Police Chief
Pekin Police Department
400 Margaret Street
Pekin, IL 61554

Subject: Contingency Plan Revision
Safety-Kleen Systems, Inc.
14249 VFW Road
Pekin, IL 61554

Dear Chief:

As required under 35 ILL. Adm. Code 724.153(b), all revisions to a hazardous waste management facility's contingency plan must be provided to your office. Enclosed is a copy of Safety-Kleen – Pekin's updated emergency coordinators list (Table G-1). If you do not have a copy of Safety-Kleen's contingency plan in your files, please indicate this on the attached response letter and a copy will be sent to you.

Please forward the response letter back to me at the address shown on the response letter as soon as possible. Your return of the attached response letter will be greatly appreciated. Safety-Kleen is required by law to keep documentation of your acceptance or refusal to enter into an emergency preparedness agreement.

If you have any questions or desire to visit the facility, please contact Mr. Eric Rombach, Branch General Manager at 309-346-1818.

Sincerely,

Kevin Farmer

Kevin Farmer
Environmental Compliance Manager
Central Division

AGREEMENT/ REFUSAL LETTER

Date: _____

To: Mr. Kevin Farmer
Safety-Kleen Systems, Inc.
201 LaSalle Street
Cape Girardeau, MO 63701

From: Police Chief
Pekin Police Department
400 Margaret Street
Pekin, IL 61554

Subject: Contingency Plan Revision
Pekin, Illinois Service Center

Dear Mr. Farmer:

This is to acknowledge receipt of the updated information for Safety-Kleen – Pekin's Contingency Plan. The revised page(s) have been incorporated into our copy of the plan.

(Please check one)

____ The full plan has been reviewed and this agency will act in accordance with the plan, should an emergency situation occur.

____ The full plan has been reviewed and this agency declines to enter into an agreement to assist in an emergency at the Pekin, Illinois Service Center.

_____
(Name - Please Print)

_____
(Signature)

_____
(Official Title)

_____ I am requesting a new copy of the plan.

safety-kleen®

CERTIFIED MAIL 7001 2510 0001 5996 7135
RETURN RECEIPT REQUESTED

September 16, 2002

Tazwell County Emergency Planning Committee
334 Elisabeth Street
Pekin, IL 61554

Subject: Contingency Plan Revision
Safety-Kleen Systems, Inc.
14249 VFW Road
Pekin, IL 61554

Dear Sir or Madam:

As required under 35 ILL. Adm. Code 724.153(b), all revisions to a hazardous waste management facility's contingency plan must be provided to your office. Enclosed is a copy of Safety-Kleen – Pekin's updated emergency coordinators list (Table G-1). If you do not have a copy of Safety-Kleen's contingency plan in your files, please indicate this on the attached response letter and a copy will be sent to you.

Please forward the response letter back to me at the address shown on the response letter as soon as possible. Your return of the attached response letter will be greatly appreciated. Safety-Kleen is required by law to keep documentation of your acceptance or refusal to enter into an emergency preparedness agreement.

If you have any questions or desire to visit the facility, please contact Mr. Eric Rombach, Branch General Manager at 309-346-1818.

Sincerely,

Kevin Farmer

Kevin Farmer
Environmental Compliance Manager
Central Division

AGREEMENT/ REFUSAL LETTER

Date: _____

To: Mr. Kevin Farmer
Safety-Kleen Systems, Inc.
201 LaSalle Street
Cape Girardeau, MO 63701

From: Tazwell County Emergency Planning Committee
334 Elisabeth Street
Pekin, IL 61554

Subject: Contingency Plan Revision
Pekin, Illinois Service Center

Dear Mr. Farmer:

This is to acknowledge receipt of the updated information for Safety-Kleen – Pekin's Contingency Plan. The revised page(s) have been incorporated into our copy of the plan.

(Please check one)

____ The full plan has been reviewed and this agency will act in accordance with the plan, should an emergency situation occur.

____ The full plan has been reviewed and this agency declines to enter into an agreement to assist in an emergency at the Pekin, Illinois Service Center.

_____
(Name - Please Print)

_____
(Signature)

_____
(Official Title)

_____ I am requesting a new copy of the plan.

safety-kleen®

CERTIFIED MAIL 7001 2510 0001 5996 7111
RETURN RECEIPT REQUESTED

September 16, 2002

Pekin Memorial Hospital
Attn: ER Nurse Manager
600 South 13th Street
Pekin, IL 61554

Subject: Contingency Plan Revision
Safety-Kleen Systems, Inc.
14249 VFW Road
Pekin, IL 61554

Dear Sir or Madam:

As required under 35 ILL. Adm. Code 724.153(b), all revisions to a hazardous waste management facility's contingency plan must be provided to your office. Enclosed is a copy of Safety-Kleen – Pekin's updated emergency coordinators list (Table G-1). If you do not have a copy of Safety-Kleen's contingency plan in your files, please indicate this on the attached response letter and a copy will be sent to you.

Please forward the response letter back to me at the address shown on the response letter as soon as possible. Your return of the attached response letter will be greatly appreciated. Safety-Kleen is required by law to keep documentation of your acceptance or refusal to enter into an emergency preparedness agreement.

If you have any questions or desire to visit the facility, please contact Mr. Eric Rombach, Branch General Manager at 309-346-1818.

Sincerely,

Kevin Farmer
Environmental Compliance Manager
Central Division

AGREEMENT/ REFUSAL LETTER

Date: _____

To: Mr. Kevin Farmer
Safety-Kleen Systems, Inc.
201 LaSalle Street
Cape Girardeau, MO 63701

From: Pekin Memorial Hospital
Attn: ER Nurse Manager
600 South 13th Street
Pekin, IL 61554

Subject: Contingency Plan Revision
Pekin, Illinois Service Center

Dear Mr. Farmer:

This is to acknowledge receipt of the updated information for Safety-Kleen – Pekin's Contingency Plan. The revised page(s) have been incorporated into our copy of the plan.

(Please check one)

____ The full plan has been reviewed and this agency will act in accordance with the plan, should an emergency situation occur.

____ The full plan has been reviewed and this agency declines to enter into an agreement to assist in an emergency at the Pekin, Illinois Service Center.

_____
(Name - Please Print)

_____
(Signature)

_____
(Official Title)

_____ I am requesting a new copy of the plan.

Exhibit G-6
Emergency Equipment List

EMERGENCY EQUIPMENT LIST		
DESCRIPTION	**LOCATION**	**MINIMUM QUANTITY**
Fire Extinguisher	Return and Fill Station[1], Tank farm tanker truck unloading area[2], warehouse - foyer[3], entrance to container storage area[1], office[4], flammable waste shelter[1]	8
Eyewash*	Warehouse, return/fill station	2
First Aid Kit*	Emergency equipment areas - Outside of office area and warehouse foyer area	2
Telephones	Office	7
Shower	Office	1
Ventilation (ceiling vents)	Warehouse	1
Rubber Gloves*	Emergency equipment areas - Outside of office area and warehouse foyer area	6
Plastic Aprons*	Emergency equipment areas - Outside of office area and warehouse foyer area	4
Safety Glasses*	Emergency equipment areas - Outside of office area and warehouse foyer area	8
Safety Goggles	Emergency equipment areas - Outside of office area and warehouse foyer area	6
Sorbent Material*	Emergency equipment area outside of office	250 sheets
Pigtail absorbents	Emergency equipment areas - Outside of office area and warehouse foyer area	6 rolls

EMERGENCY EQUIPMENT LIST Continued		
Shovel	Emergency equipment areas - Outside of office area and warehouse foyer area	2
Mop & Bucket	Warehouse	1
Wet/Dry Vacuum	Warehouse	1
Oil Dry	Warehouse	150 pounds
Emergency Blanket	Emergency equipment area - Outside of office area	1
Steel-Toed Rubber Boots	Emergency equipment area - Outside of office area	1
Skin/Eye Wash	Emergency equipment areas - Outside of office area and warehouse foyer area	10 Bottles
Half-Face Respirators	Emergency equipment areas - Outside of office area and warehouse foyer area	4
MSDS Binder & S-K Material Handling Guide	Emergency equipment areas - Outside of office area and warehouse foyer area	1 of Each

*These items and a reflector kit are also located on each route vehicle.

1 Specification 4-A:60-B:C
2 Specification 20-A:120-B:C
3 Specification10-A:60-B:C
4 Specication 330-A:B:C
5 Emergency equipment areas are located between the office and warehouse area of the northwest building and in the foyer area of the southeast warehouse building.

APPENDIX H
TRAINING INFORMATION

Exhibit H-1
Job Descriptions

FIELD POSITION DESCRIPTION

Position title: **Branch General Manager**

Job code: **BGM**

Reporting Relationship: Reports to District Manager

Qualifications:
- College Degree or equivalent sales/management experience
- Must have five (5) years of progressively responsible branch sales and management experience
- Must possess leadership abilities, and have the capacity to interface effectively with Branch, District, Region, and Marketing personnel.

Position Overview: Overall responsibility for Branch operations including, but not limited to, Growth, Profit and Loss, EH&S compliance, Asset management, Employee turnover…

Essential Job Functions and Responsibilities:
- Profit and Loss
- Customer retention
- Reduce employee turnover
- Environmental, Health & Safety (ETTS Compliance)
- Personnel management with H-R assistance
- Assist with employee recruiting and training
- Fleet management
- Community relations
- Ensure ethical business practices
- Distribute and manage sales reports
- Monitor sales / service activities

FIELD POSITION DESCRIPTION

Position title: **Lead Secretary**

Job code: **LSEC**

Reporting Relationship: Reports to Branch General Manager

Qualifications: Must be a high school graduate with good written and verbal communication skills, interpersonal skills and computer knowledge

Position Overview: Lead Secretary must posses the ability to interact efficiently with Branch General Manager, Customer Service Manager and Branch Sales Manager. Directs all paperwork flow and must exhibit a thorough knowledge of Hazardous Waste regulations, and all Safety-Kleen Corporate policies and procedures. Coordinates administration staff training on all issues, as well as maintaining ETTS information for facility.

Essential Job Functions and Responsibilities:

- Supervise Branch Secretaries.
- Verification of Sales and Haz Waste documents completed by Sales and Service Representatives.
- Act as escort for government inspectors through the facility in the absence of Branch General Manager, Lead Material Handler or Environmental Manager.
- Ensure proper completion of Facility Operating Log, and proper maintenance of Accounts Receivable, branch bank deposits, Manifests, and other key administrative areas.
- May act as primary or alternate Emergency Coordinator and assists management in incident response.
- Maintain ETTS database, and ensure all personnel are up to date and documented on all training as required by Safety-Kleen and applicable government agencies.
- Coordinate personnel requirements such as DOT physicals, employee physicals, State Transporter License Numbers (if applicable), start packs, Worker's Compensation claims, etc.
- Monitor contractors doing work on site.
- Provides corrections for annual reports.
- Obtains EPA ID number lists for state or region.
- Oversees FRS/Lab correspondence.
- Participate in the hiring and training of Admin. Staff.
- Maintain branch level Customer Service/Collection procedures.
- Perform other duties as assigned by BGM.

FIELD POSITION DESCRIPTION

Position title: **Branch Secretary**

Job code: BSEC

Reporting Relationship: Reports to Lead Secretary

Qualifications: : Must be a high school graduate with good written and verbal communication skills, interpersonal skills and computer knowledge

Position Overview: Secretary must posses the ability to interact efficiently with Lead Secretary, Customer Service Manager and Branch Sales Manager. Directs paperwork flow and must exhibit a thorough knowledge of Hazardous Waste regulations, and all Safety-Kleen Corporate policies and procedures.

Essential Job Functions and Responsibilities:

- Verification of Sales and Haz Waste documents completed by Sales and Service Representatives.
- Ensure proper maintenance of Accounts Receivable, branch bank deposits, Manifests, and other key administrative areas.
- Provides corrections for annual reports.
- Oversees FRS/Lab correspondence.
- Maintain branch level Customer Service/Collection procedures.
- Perform other duties as assigned by management.

FIELD POSITION DESCRIPTION

Position title: **Material Handler, Lead**

Job code: **MHL**

Reporting Relationship: Reports to Branch General Manager

Qualifications:
- High school graduate
- Ability to pass CDL and other hiring requirements

Position Overview: Responsible for operation of Return and Fill, site E,H & S compliance and general warehouse/housekeeping

Essential Job Functions and Responsibilities:
- Oversee operation of Return and Fill.
- Assist in training Material Handlers (MHBs)
- Act as escort for government inspectors through the facility in the absence of Branch General Manager or Environmental Manager or Lead Secretary.
- Ensure proper completion of Facility Operating Log and compliance with site specific regulatory issues.
- May act as primary or alternate Emergency Coordinator and assists management in incident response.
- Monitor contractors doing work on site.
- Oversee facility housekeeping schedule.
- Other duties as directed by BGM.

FIELD POSITION DESCRIPTION

Position title: **Material Handler, Branch**

Job code: **MHB**

Reporting Relationship: Reports to Lead Material Handler

Qualifications:
- High school graduate
- Ability to pass CDL and other hiring requirements

Position Overview: Operation of Return and Fill, site E,H & S compliance and general warehouse/housekeeping duties

Essential Job Functions and Responsibilities:
- Operation of Return and Fill.
- Facility housekeeping.
- Other duties as directed by Lead Material Handler.

FIELD POSITION DESCRIPTION

Position title: **Customer Service Manager**

Job code: **CSM**

Reporting Relationship: Reports to the Branch General Manager

Qualifications:
- College Degree or equivalent sales/management experience
- Must have three (3) years of progressively responsible branch sales / service and management experience
- Must possess leadership abilities, and have the capacity to interface effectively with Branch, and District personnel.

Position Overview: Ensure optimum customer service leading to retention and expansion of branch business

Essential Job Functions and Responsibilities:
- Assure Customer satisfaction and retention
- Recruit / Train Customer Service Representatives
- Reduce employee turnover
- Maintain high On Time Performance
- Preprint / route management
- Manage Accounts receivable / DSO
- QA Sales and Service
- Fleet Management
- Environmental, Health and Safety

FIELD POSITION DESCRIPTION

Position title: **Customer Service Technician**

Job code: **CST**

Reporting Relationship: Reports to Branch Customer Service Manager

Qualifications:
- High school graduate
- Ability to pass CDL and other hiring requirements
- Mechanical aptitude
- Ability to interface with Customers and branch personnel

Position Overview: Install, maintain, repair and refurbish equipment at Customers

Essential Job Functions and Responsibilities:
- Level Two equipment repair
- Assure Customer Satisfaction
- Technical installations
- QA – QC equipment prior to installation
- Refurbish equipment in the field
- Maintain appropriate certifications
- Assist branch in maintaining low DSO and high On time Performance

FIELD POSITION DESCRIPTION

Position title: **Senior Customer Service Representative**

Job code: **CSRS**

Reporting Relationship: Reports to the Branch Customer Service Manager

Qualifications:

Position Overview: Assist Branch Service Manager to ensure optimum customer service leading to retention and expansion of branch business

Essential Job Functions and Responsibilities:

- Assist in recruiting, training and managing Customer Service Reps
- Service equipment at Customers
- Develop strong customer relations
- Maintain high branch On Time Performance
- Maintain low branch DSO
- Installation/Recovery of equipment
- Level One equipment repair
- EH&S Compliance
- Other duties as assigned by the Branch Service Manager

FIELD POSITION DESCRIPTION

Position title: **Customer Service Representative**

Job code: **CSREP**

Reporting Relationship: Reports to Branch Customer Service Manager

Qualifications:
- High school graduate
- Ability to pass CDL and other hiring requirements

Position Overview: Provide service at a level that meets or exceeds customer expectations.

Essential Job Functions and Responsibilities:
- Service equipment at Customers
- Develop strong customer relations
- Maintain high branch On Time Performance
- Maintain low branch DSO
- Installation/Recovery of equipment
- Level One equipment repair
- EH&S Compliance
- Other duties as assigned by the Branch Service Manager

FIELD POSITION DESCRIPTION

Position title: **Customer Service Representative, Oil**

Job code: **CSOIL**

Reporting Relationship: Reports to Branch Customer Service Manager

Qualifications:
- High school graduate
- Ability to pass CDL and other hiring requirements

Position Overview: Provide service at a level that meets or exceeds customer expectations.

Essential Job Functions and Responsibilities:
- develop strong customer relations
- Maintain high branch On Time Performance
- Maintain low branch DSO
- H&S Compliance
- Other duties as assigned by the Branch Service Manager
- **Other. As specified by Greg Stevens**

FIELD POSITION DESCRIPTION

Position title: **Customer Service Representative, Vac**

Job code: **CSVAC**

Reporting Relationship: Reports to Branch Customer Service Manager

Qualifications:
- High school graduate
- Ability to pass CDL and other hiring requirements

Position Overview: Provide service at a level that meets or exceeds customer expectations.

Essential Job Functions and Responsibilities:
- Develop strong customer relations
- Maintain high branch On Time Performance
- Maintain low branch DSO
- EH&S Compliance
- Other duties as assigned by the Branch Service Manager
- **Other, As specified by Don Moyer**

FIELD POSITION DESCRIPTION

Position title: **Branch Sales Manager**

Job code: **BSM**

Reporting Relationship: Reports to Branch General Manager

Qualifications:
- high school graduate
- proven sales / management ability
- self motivated
- excellent communication and presentation skills

Position Overview: Manage sales to existing and new customers – supervise Branch Sales Specialists

Essential Job Functions and Responsibilities:
- Growth / Quota attainment
- Establish goals and monitor sales activity
- Recruit, train and develop Sales Specialists
- Customer retention / Accounts Receivable
- Key Account management
- Comply with Corporate Credit Policies
- Gather competitive information
- Collaborate with Branch Service Manager to ensure high level of Customer satisfaction / retention

FIELD POSITION DESCRIPTION

Position title: **Senior Branch Sales Specialist**

Job code: **SBSS**

Reporting Relationship: Reports to Branch General Manager

Qualifications:
- high school graduate
- proven sales / management ability
- self motivated
- excellent communication and presentation skills

Position Overview: Direct sales to existing and new customers -- supervise Branch Sales Specialist(s)

Essential Job Functions and Responsibilities:
- Growth / Quota attainment
- Establish goals and monitor sales activity
- Recruit, train and develop Sales Specialists
- Customer retention / Accounts Receivable
- Key Account management
- Comply with Corporate Credit Policies
- Gather competitive information
- Collaborate with Branch Service Manager to ensure high level of Customer satisfaction / retention

FIELD POSITION DESCRIPTION

Position title: **Branch Sales Specialist**

Job code: **BSS**

Reporting Relationship: Reports to Branch Sales Manager or Senior Sales Specialist

Qualifications:
- high school graduate
- proven sales ability
- self motivated
- excellent communication and presentation skills

Position Overview: Grow branch businesses through direct selling to new and existing customers

Essential Job Functions and Responsibilities:
- Full time direct sales to specific SIC
  - Current account expansion
  - New account creation
- Account retention / Accounts Receivable
- Sample waste streams
- Comply with Corporate Credit Policies

FIELD POSITION DESCRIPTION

Position title: **Special Assignment, Management**

Job code: **SAM**

Reporting Relationship: Reports to Regional Vice President

Qualifications: Current S-K employee

Position Overview: Temporary assignment

Essential Job Functions and Responsibilities: As specified by Regional Vice President of Sales

FIELD POSITION DESCRIPTION

Position title: **Special Assignment, Sales**

Job code: **SASL**

Reporting Relationship: Reports to Regional Vice President

Qualifications: Current S-K employee

Position Overview: Temporary assignment

Essential Job Functions and Responsibilities: As specified by Regional Vice President of Sales

FIELD POSITION DESCRIPTION

Position title: **Special Assignment, Service**

Job code: **SASV**

Reporting Relationship: Reports to Regional Vice President

Qualifications: Current S-K employee

Position Overview: Temporary assignment

Essential Job Functions and Responsibilities: As specified by Regional Vice President of Sales

Exhibit H-2
Example Training Record Form

SAFETY-KLEEN CORP.
TRAINING ATTENDANCE /CERTIFICATION SHEET

ɔurse Code: _____ ETTS Class Number: _____
ɔurse Name: _____
ɔcation: _____ Date: _____ thru _____
ty, State: _____ Time: _____ to _____ Duration: ____ (total hours)

	PRINTED NAME	SIGNATURE	EMPLOYEE ID #	FACILITY NUMBER (3-digit) AND NAME
).				
1.				
2.				
3.				
4.				
5.				
6.				
7.				
8.				
9.				
0.				

he above listed employees have demonstrated satisfactory performance and comprehension of the course named above.

rainers: _____ Trainers Signature: _____
(Please Print)

_____ _____
(Please Print)

rainer(s) Facility: _____ _____ _____

Page ___ of ___

Table H-1
New Branch Manager Training

Table H-1

NEW BRANCH MANAGER TRAINING

Program for Environmental, Health & Safety Manager branch visit –

1. Review of Part B Permit
   - Part A application
   - Waste analysis plan
   - Preparedness and prevention plan (including proper waste handling techniques)
   - Contingency plan – all of Chapter 4 and Appendix F of the Part B permit application including:
     - a. Procedures for using, inspection, repairing, and replacing facility emergency and monitoring equipment.
     - b. Communications or alarm systems.
     - c. Response to fires or explosions.
     - d. Response to groundwater contamination incidents.
     - e. Shutdown of operations.
   - Training plan
   - Closing plan and financial requirements
2. Review of transportation licensing
3. Review of environmental compliance guidance and Corporate policy manual
4. Conduct detailed facility inspection with branch manager
   - Identify deficiencies requiring branch attention
   - Identify problems requiring Technical Services assistance
   - Review actual vs. permitted waste storage capacities
5. File Review
   - Manifests and land ban notices
   - Training files
   - Spill report file
   - Community Right-to-Know files
   - Inspection records
   - Operation log
6. Contingency plan training session with branch manager and all alternate emergency coordinators
   - Include spill simulation and response
   - Update the emergency information and local authority notifications
7. Health and Safety
   - OSHA 300 Reporting
   - Hazard communication program
8. Review branch specific manifesting procedures and customer ID# compliance
9. Review of past agency inspections and other past branch compliance related issues
10. Environmental training for branch personnel
    - Requirements for content and frequency
    - Conducting training sessions
    - Recordkeeping

Notes to Environmental, Health & Safety Managers:

- Be prepared with examples and extra copies of all forms in case the branch is missing them.
- Spend time at the beginning of the visit reviewing Environmental files for potential missing information or problems.
- Use several short quizzes covering the major topics as a review and documentation of the training session. A training record form should also be completed.
- Provide copies of your recent memos concerning environmental compliance at the branch or in the state. Branch copies may be missing.
- Provide Safety-Kleen part numbers for equipment (sorbents, signs, etc…) that may be missing at the branch.
- Review waste management methods specific to this facility.

Table H-2
Introductory and Annual Training Topics For Facility Employees

Table H-2

INTRODUCTORY AND ANNUAL TRAINING TOPICS FOR FACILITY EMPLOYEES

TOPICS COVERED DURING TRAINING

- Environmental Regulation Update
- Part A and Part B Permit Requirements
- Waste Analysis Plan
- Preparedness & Prevention Plan
- Contingency Plan & Emergency Procedure
- Annual Review of Training
- Closure
- Inspections
- Manifesting
- Spill Reports (Including Review of SPCC Plan

Note:

Employees may not work in unsupervised positions until they have received emergency response training. Employees must be completely trained, in all items listed above, within six months of starting and annually thereafter.

APPENDIX I
CLOSURE AND POST-CLOSURE REQUIREMENTS

Exhibit I-1
Closure Schedule

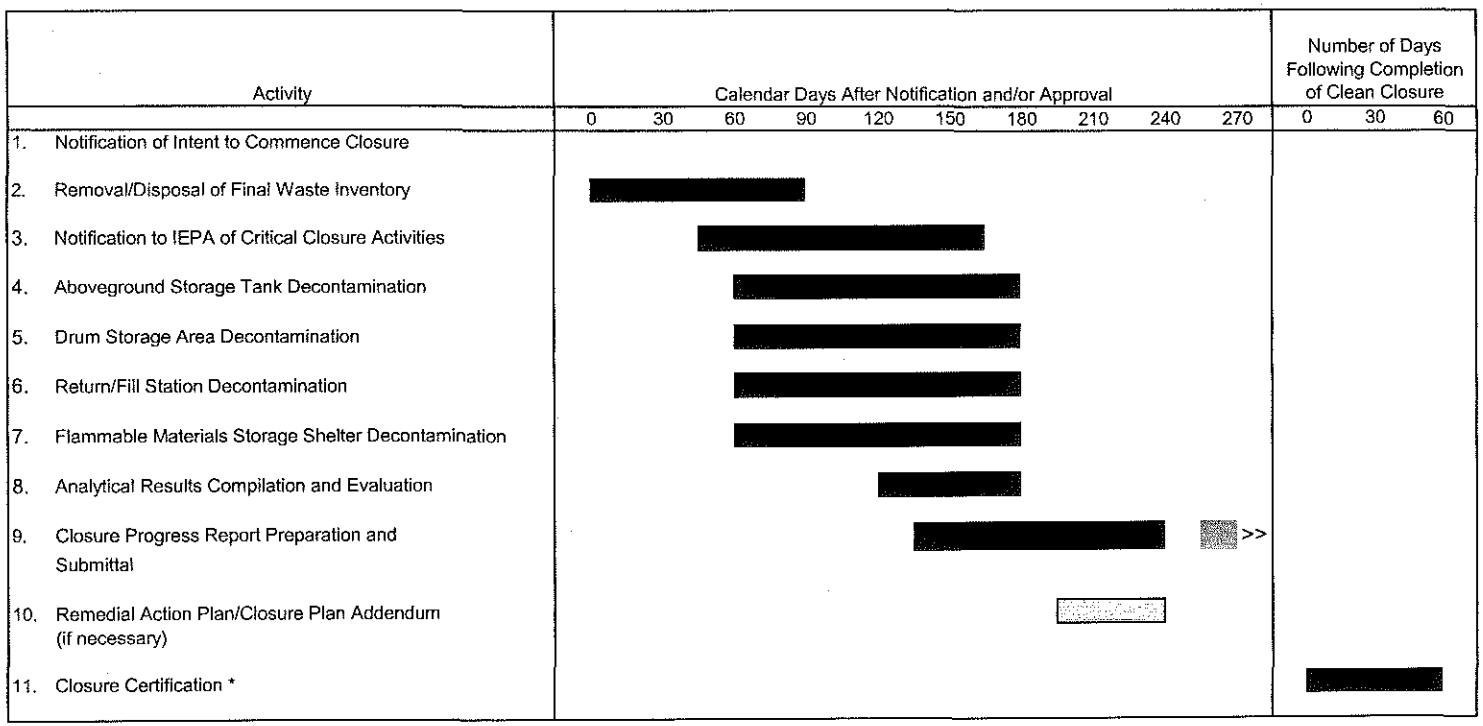

Notes:

>>> Indicates that this activity continues until certification of "clean closure."

Indicates an optional activity based on the closure analytical results.

* If no impacts are detected during the decontamination activities, closure certification will be submitted within 60 days of the completion of closure activities.

Exhibit I-1: TENTATIVE CLOSURE COMPLETION SCHEDULE, SAFETY-KLEEN SYSTEMS, INC. SERVICE CENTER, PEKIN, ILLINOIS

Exhibit I-2
Closure Cost Estimate

Exhibit I-2. Closure Cost Estimate Worksheet, Safety-Kleen Systems, Inc. Service Center, Pekin, IL (4/03)

Activity	Category	Hourly Rate or Unit Charge	Hours or Unit Estimate	Subtotal (includes 10% Markup for Subcontractors)
1. PROJECT COORDINATION AND SCHEDULING				
Prime Contractor Costs				
- Obtain subcontractor quotes to implement closure activities	Project Manager	$92	6	$552
- Coordinate scope and schedule of project activities with owner/operator, decontamination contractor, regulatory agencies and analytical laboratory	Project Manager	$92	4	$368
- Review facility permit and closure plan	Project Engineer	$78	6	$468
	Field Supervisor	$60	12	$720
- Prepare project/site specific Health and Safety Plan	Health/Safety Specialist	$78	6	$468
- Participate in on-site coordination and orientation meeting with owner/operator and decontamination contractor	Project Manager	$92	2	$184
- Prepare project activity and project status reports	Project Manager	$92	4	$368
- Office Expenses		$100	1	$100
- Miscellaneous Expenses		$100	1	$100
Activity 1. Subtotal				$3,328
2. MOBILIZE TO SITE AND PREPARE FOR CLOSURE				
Assumptions - Waste solvent tank is full (20,000 gallons) - Spent antifreeze tank is full (10,000 gallons) - Permitted capacity of CSA (10,560 gallons) and Flammable Materials Shelter (2,184 gallons) is 232 55-gallon drums - Waste solvent transported to New Castle, KY Recycle Center. Unit cost is based on $71.15 per 55-gallon drum, and includes treatment and disposal. - Generator knowledge used for disposal/treatment of waste solvent and spent antifreeze (i.e. no sampling required). However, analysis of 2 waste characterization samples is included as a conservative measure. - Waste haulers costs to transport drums to reclaimer based on RS Means. Documentation of unit costs provided in notes at the end of the cost estimate - Prime Contractor per diem includes rental car, room and meals - Subcontractor costs include labor and all expenses to complete each task				
Owner/Operator Costs				
- Closure project supervision and oversight	Remediation Manager	$4,000	LS	$4,000
Prime Contractor Costs				
- Project Management and Supervision	Project Manager	$92	2	$184
- Supervise waste loading activities	Field Supervisor	$60	10	$600
	Travel	$750	1	$750
	Per diem	$150	2	$300
- Collect representative waste characterization sample of drummed wastes	Field Supervisor	$60	1	$60
	Supplies/Shipping	$150	1	$150
Subcontractor Costs				
- Subcontractor mobilization		$2,580	LS	$2,838
- Transfer tank contents to tankers	Foreman/labor/equipment	$2,500	LS	$2,750
- Transport waste solvent to a TSD for treatment/disposal Assumes 6 trucks to transport 30,000 gallons Estimated Tanker Trailer Cost = $51.77/hr Estimated Driver Cost = $30.03/hr				
Estimated mileage/drive time (6 hours per trip)	Labor/equipment/drive time	$491	6	$3,239
Estimated treatment/disposal cost (per gallon)	TSD	$1.29	30000	$42,570
- Transfer drums in CSA to trucks	Foreman/labor/equipment	$580	LS	$638
- Transport drums to TSD for Treatment/Disposal Assumes 4 trucks to transport 232 drums Estimated Box Trailer Cost = $51.77/hr Estimated Driver Cost = $30.03/hr				
Estimated mileage/drive time (6 hours per trip)	Labor/equipment/drive time	$491	4	$2,160
Estimated disposal/treatment cost (per drum)	TSD	$71.15	232	$18,157
Laboratory Subcontractor Costs				
- Waste characterization sample analysis Waste characterization analysis to consist of TCLP VOCs, SVOCs and Metals		$627	2	$1,379
Activity 2. Subtotal				$79,777
3. STORAGE TANK DECONTAMINATION AND REMOVAL (2 Tanks)				
Assumptions: - Tanks and appurtenant equipment are removed and scrapped - Rinsate sampling is not necessary because the tanks will be scrapped - Prime Contractor field supervisor travel is accounted for in above activity - Prime Contractor per diem includes rental car, room and meals - Assumes secondary containment removed - Assumes collection of 2 soil samples from beneath waste solvent containment area is necessary - Subcontractor costs include labor and all expenses to complete each task				
Prime Contractor Costs				
- Project Management and Supervision	Project Manager	$92	4	$368
- Supervise Storage Tank Decontamination and Removal Activities	Field Supervisor	$60	40	$2,400
	Per diem	$150	4	$600
- Inspect Secondary Containment	Project Engineer	$78	4	$312
	Travel	$750	1	$750
	Per diem	$150	2	$300
- Collect soil samples	Field Supervisor	$60	4	$240
	Per diem	$150	1.0	$150
	Sample supplies/shipping	$150	LS	$150
Subcontractor Costs				
- Disconnect electrical appurtenances	Labor/equipment	$450	LS	$495
- Decontaminate 2 waste ASTs, piping and Containment Area Wash/triple rinse tank , piping and containment with high pressure spray Remove wash/rinse water, containerize in drums Cost for transportation and wash water disposal included in activity 8 below	Foreman/labor/equipment	$2,100	LS	$2,310
- Remove spent solvent AST from containment area	Foreman/labor/equipment	$1,000	LS	$1,100
- Demolish 2 ASTs and piping, haul for remelt	Foreman/labor/equipment	$2,900	LS	$3,190
- Demolish Containment Area, load concrete for disposal/recycling	Foreman/labor/equipment	$5,900	LS	$6,490
	Disposal/Recycling (26 cubic yards)	$16	YD	$458
Laboratory Subcontractor Costs				
- Analyze 2 soil samples for VOCs, SVOCs, and Metals				
	VOCs @ $100/sample SVOCs @ $210/sample Metals @ $90/sample EnCore Sample Container @ $24/sample x 2/sample			
	Total per sample cost	$448	2	$986
Activity 3. Subtotal				$20,298

Exhibit I-2. Closure Cost Estimate Worksheet, Safety-Kleen Systems, Inc. Service Center, Pekin, IL (4/03)

Activity	Category	Hourly Rate or Unit Charge	Hours or Unit Estimate	Subtotal (Includes 10% Markup for Subcontractors)
4. DECONTAMINATE ONE CONTAINER STORAGE AREA				
Assumptions:				
- CSA located inside warehouse and consists of a concrete slab floor with curbing and trench and is approximately 48 x 57 = 2736 sq. ft.				
- Decontamination shall consist of washing with a high-pressure detergent/water solution and triple rinsing with tap water				
- CSA to remain in-place following closure				
- Prime Contractor project engineer and field supervisor travel accounted for in above activities				
- Prime Contractor per diem includes rental car, room and meals				
- Assumes up to 2 soil samples will be collected from beneath the CSA				
- Field supervisor qualified to collect soil and rinsate samples				
- Subcontractor costs include labor and all expenses to complete each task				
Prime Contractor Costs				
- Inspect the floor of CSA for cracks, gaps, or other potential lapses of integrity	Project Engineer	$78	2	$156
	Per diem	$150	0.25	$38
- Fill cracks and gaps (if necessary) prior to implementing decontamination activities	Field Supervisor	$60	2	$120
	Per diem	$150	0.25	$38
- Supervise and document decontamination of CSA	Field Supervisor	$60	6	$360
	Per diem	$150	0.75	$113
- Collect sample of final rinsate from CSA, submit for laboratory analysis	Field Supervisor	$60	2	$120
	Per diem	$150	0.25	$38
- Core through concrete at 2 locations beneath CSA	Field Supervisor	$60	2	$120
	Per diem	$150	0.25	$38
	Equipment	$100	day	$100
- Collect 2 soil samples beneath CSA for analysis of VOCs, SVOCs and metals	Field Supervisor	$60	4	$240
	Per diem	$150	0.5	$75
	Sample supplies/shipping	$300	LS	$300
Subcontractor Costs				
Decontaminate 1 container storage area	Foreman/labor/equipment	$900	LS	$990
Assumes decontamination with detergent/water solution, and scrubbing with brooms, mops, etc., and triple rinsing with high pressure spray. Wash/rinse water containerized and transferred to drums				
Cost for transportation and disposal of drums included in Activity 8 below.				
Laboratory Subcontractor Costs				
- Analyze 1 rinsate sample for VOCs and SVOCs				
	VOCs @ $100/sample			
	SVOCs @ $200/sample			
	Total per sample cost	$300	1	$330
- Analyze 2 soil samples for VOCs, SVOCs and Metals				
	VOCs @ $100/sample			
	SVOCs @ $210/sample			
	Metals @ $90/sample			
	EnCore Sample Container @ $24/sample x 2/sample			
	Total per sample cost	$448	2	$986
Activity 4, Subtotal				$4,159
5. DECONTAMINATE THE RETURN/FILL STATION				
Assumptions:				
- Washing shall consist of a high-pressure detergent/water solution and triple rinsing with tap water				
- The R/F structure, including the dumpsters/drum washers will be saved for reuse				
- Drum washers shall be removed from the R/F and staged within the warehouse				
- Rinsate sample required for drum washers (2) and secondary containment (3 total) for VOCs and SVOCs				
- Assumes up to 2 soil samples will be collected from beneath the return/fill containment area				
- Prime Contractor project engineer and field supervisor travel accounted for in above activities				
- Prime Contractor per diem includes rental car, room and meals				
- Subcontractor costs include labor and all expenses to complete each task				
Prime Contractor Costs				
- Supervise and document removal of residual sludges (if necessary) from the drum washers	Field Supervisor	$60	4	$240
	Per diem	$150	0.5	$75
- Supervise washing of R/F Station and associated components (i.e. piping, pumps, and appurtenances)	Field Supervisor	$60	8	$480
	Per diem	$150	1	$150
- Inspect containment and document with field notes and photographs	Project Engineer	$78	2	$156
	Per diem	$150	0.25	$38
- Collect rinsate samples for analysis of VOCs and SVOCs	Field Supervisor	$60	2	$120
	Per diem	$150	0.25	$38
	Sample supplies/shipping	$150	LS	$150
Subcontractor Costs				
- Remove residual sludge from drum washers, decontaminate drum washers, grating, containment and structure	Foreman/labor/equipment	$2,900	LS	$3,190
Assumes decontamination with detergent/water solution, and scrubbing with brooms, mops, etc., and triple rinsing with high pressure spray. Wash/rinse water containerized and transferred to drums				
Cost for transportation and disposal of drums included in Activity 8 below.				
Laboratory Subcontractor Costs				
- Analyze 3 rinsate sample for VOCs and SVOCs				
	VOCs @ $100/sample			
	SVOCs @ $200/sample			
	Total per sample cost	$300	3	$990
- Analyze 2 soil samples for VOCs, SVOCs and Metals				
	VOCs @ $100/sample			
	SVOCs @ $210/sample			
	Metals @ $90/sample			
	EnCore Sample Container @ $24/sample x 2/sample			
	Total per sample cost	$448	2	$986
Activity 5, Subtotal				$6,612

Activity	Category	Hourly Rate or Unit Charge	Hours or Unit Estimate	Subtotal (Includes 10% Markup for Subcontractors)
6. DECONTAMINATE FLAMMABLE MATERIALS STORAGE SHELTER				
Assumptions:				
- Flammable materials storage shelter consists of a metal structure with elevated grating and metal containment pans and is approximately 15 x 20 = 300 sq. ft.				
- Decontamination shall consist of washing with a high-pressure detergent/water solution and triple rinsing with tap water				
- Flammable materials storage shelter each to remain in-place following closure				
- Prime Contractor project engineer and field supervisor travel accounted for in above activities				
- Prime Contractor per diem includes rental car, room and meals				
- Assumes up to 2 soil samples will be collected from beneath the flammable materials storage shelter				
- Field supervisor qualified to collect soil and rinsate samples				
- Subcontractor costs include labor and all expenses to complete each task				
Prime Contractor Costs				
- Inspect the floor of the Flam Shed for cracks, gaps, or other potential lapses of integrity	Project Engineer	$92	2	$184
	Per diem	$150	0.25	$38
- Fill cracks and gaps (if necessary) prior to implementing decontamination activities	Field Supervisor	$60	2	$120
	Per diem	$150	0.25	$38
- Supervise and document decontamination of Flam Shed	Field Supervisor	$60	6	$360
	Per diem	$150	0.75	$113
- Collect sample of final rinsate from Flam Shed, submit for laboratory analysis	Field Supervisor	$60	2	$120
	Per diem	$150	0.25	$38
- Core through concrete at 2 locations beneath Flam Shed	Field Supervisor	$60	2	$120
	Per diem	$150	0.25	$38
	Equipment	$100	day	$100
- Collect 2 soil samples for analysis of VOCs, SVOCs and metals	Field Supervisor	$60	4	$240
	Per diem	$150	0.5	$75
	Sample supplies/shipping	$300	LS	$300
Subcontractor Costs				
Decontaminate 1 Flammable Materials Storage Shelter	Foreman/labor/equipment	$2,100	LS	$2,310
Assumes decontamination with detergent/water solution, and scrubbing with brooms, mops, etc., and triple rinsing with high pressure spray. Wash/rinse water containerized and transferred to drums				
Cost for transportation and disposal of drums included in Activity 8 below.				
Laboratory Subcontractor Costs				
- Analyze 1 rinsate sample for VOCs and SVOCs				
	VOCs @ $100/sample			
	SVOCs @ $200/sample			
	Total per sample cost	$300	1	$330
- Analyze 2 soil samples for VOCs, SVOCs and Metals				
	VOCs @ $100/sample			
	SVOCs @ $210/sample			
	Metals @ $90/sample			
	EnCore Sample Container @ $24/sample x 2/sample			
	Total per sample cost	$448	2	$986
Activity 6. Subtotal				$5,507
7. DECONTAMINATE CLEANUP EQUIPMENT (If Necessary)				
Assumptions:				
- Decontamination of Cleanup Equipment is not anticipated to be necessary. Equipment used to remove waste units will only be used following decontamination of the unit (i.e. equipment will not come into contact with hazardous waste). Other cleanup equipment such as pressure washers will be cleaned during decontamination of each respective unit.				
- If performed, washing of cleanup equipment shall consist of a high-pressure detergent/water solution and triple rinsing with tap water				
Prime Contractor Costs				
- Supervise washing of cleanup equipment	Field Supervisor	$60	4	$240
	Per diem	$150	0.5	$75
Subcontractor Costs				
- Construct decon area with 6mil plastic sheeting and 4" absorbent berm	Foreman/labor/equipment	$500	LS	$550
- Decontaminate cleanup equipment				
Assumes decontamination with detergent/water solution, and scrubbing with brooms, mops, etc., and triple rinsing with high pressure spray. Wash/rinse water containerized and transferred to drums				
Cost for transportation and disposal of drums included in Activity 8 below.				
Activity 7. Subtotal				$865
8. CONTAINERIZE, STAGE, TRANSPORT AND DISPOSE OF DECONTAMINATION WASTES				
Assumptions:				
- 1000 gallons wash water generated from decontamination of waste AST, piping and secondary containment (including residual sludge) = 18 drums				
- 1000 gallons of wash water generated from decontamination of CSA = 18 drums				
- 500 gallons of wash water generated from decontamination of return/fill station and drum washer = 9 drums				
- 330 gallons sludge removed from drum washer = 6 drums				
- 250 gallons of wash water generated from decontamination of both Flammable Materials Storage Shelter = 5 drums				
- PPE, plastic sheeting, disposable cleanup equipment, consumables, etc. contained in 4 drums				
- Waste characterization samples not necessary for wash/water disposal (wash water from solvent tank, R/F and containment disposed as hazardous waste solvent, CSA wash water also disposed as hazardous waste)				
Prime Contractor Costs				
- Ensure drums are properly labeled, coordinate pick up and disposal	Project Manager	$92	4	$368
	Per diem	$150	0.5	$75
- Purchase 60 55-gallon drums	Drums @ $35 each	$35	60	$2,100
Subcontractor Costs				
- Transfer drums of decon waste to trucks	Foreman/labor/equipment (no charge, included in above costs)	$0	LS	$0
- Transport drums to TSD for Treatment/Disposal				
Assumes 1 truck to transport 60 drums				
Estimated Box Trailer Cost = $51.77/hr				
Estimated Driver Cost = $30.03/hr				
Estimated mileage/drive time (6 hours per trip)	Labor/equipment/drive time	$491	1	$540
Estimated treatment/disposal cost (per drum)	TSD	$71	60	$4,696
Activity 8. Subtotal				$7,779

Exhibit I-2. Closure Cost Estimate Worksheet, Safety-Kleen Systems, Inc. Service Center, Pekin, IL (4/03)

Activity	Category	Hourly Rate or Unit Charge	Hours or Unit Estimate	Subtotal (includes 10% Markup for Subcontractors)
9. CLOSURE CERTIFICATION REPORT				
Assumptions:				
- CLOSURE CERTIFICATION REPORT certified by an Illinois- registered PE and S-K				
Prime Contractor Costs				
- Compile field notes and photographs	Project Manager	$92	2	$184
	Project Engineer	$78	2	$156
- Compile rinsate and soil sample data into summary tables	Project Manager	$92	4	$368
	Project Engineer	$78	8	$624
- Draft Closure Certification Report	Project Manager	$92	8	$736
	Project Engineer	$78	16	$1,248
- Prepare closure certification statement	Sr. Project Engineer	$115	2	$230
- Office Expenses	Drafting/Clerical	$400	1	$400
- Miscellaneous Expenses	Copying/Postage	$100	1	$100
Activity 9. Subtotal				$4,046

COST ESTIMATE ACTIVITIES SUMMARY	
1. PROJECT COORDINATION AND SCHEDULING	$3,326
2. MOBILIZE TO SITE AND PREPARE FOR CLOSURE	$79,777
3. STORAGE TANK DECONTAMINATION AND REMOVAL (2 Tanks)	$20,298
4. DECONTAMINATE ONE CONTAINER STORAGE AREA	$4,159
5. DECONTAMINATE THE RETURN/FILL STATION	$6,612
6. DECONTAMINATE FLAMMABLE MATERIALS STORAGE SHELTER	$5,507
7. DECONTAMINATE CLEANUP EQUIPMENT (If Necessary)	$865
8. CONTAINERIZE, STAGE, TRANSPORT AND DISPOSE OF DECONTAMINATION WASTES	$7,779
9. CLOSURE CERTIFICATION REPORT	$4,046
TOTAL CLOSURE COST ESTIMATE	$132,370

Notes:
- Prime Contractor Rates obtained from TriHydro Corporation 2003 Schedule of Charges
- Subcontractor prices provided by Evans Environmental Construction, Glenwood, Iowa
- Laboratory Subcontractor Rate Obtained From Analytical Service, Inc. (Norcross, Georgia) Schedule of Charges
- Unit Cost for Truck with Trailer and Driver Obtained from RS Means Environmental Cost Handling Options and Solutions (code COETI) 1truck $38.88 + trailer $15.63 = $54.49
  $54.49 x location factor 0.95 (based on zip code) = $51.77
  Unit Cost for Driver = $23.95 x location factor 0.95 = $22.75 + 10% profit + 20% overhead = $30.03
- Drive time estimated at 6 hours, based on a one-way trip from Pekin, IL to Newcastle, KY (363 miles)
- Waste solvents and drummed waste treatment/disposal unit cost obtained from Safety-Kleen, New Castle Recycle Center, Smithfield, Kentucky at $71.16 per 55 gallon drum ($1.29/gallon)

Exhibit I-2a
Soil Sampling Plan Outline

EXHIBIT I-2a
SOIL SAMPLING PLAN

This document describes the soil sampling plan that will be carried out during closure of the Service Center. This sampling plan has been developed with the purpose of certifying clean closure.

Equipment

Because of the shallow sampling depths, soil samples will be collected by hand-augering or other suitable methods.

Equipment Decontamination Procedures

All augers will be cleaned prior to and between each sampling location to reduce the possibility of cross-contamination. The augers will be washed in a solution of residue-free soap (i.e., Alconox®) and double rinsed with clean potable water and deionized water between sample collection intervals as well as boring locations. The wastewater will be drummed and disposed.

Sampling Locations and Intervals

Soil boring locations will be taken based on an approximately 25-foot grid interval. At each boring location, one soil sample will be taken at a depth of 0-6 inches.

Sampling Procedures and Laboratory Analyses

Soil samples be collected, stored on ice, placed in a cooler, and sent to a independent laboratory for the appropriate laboratory analyses. These analyses will be based on the waste codes handled in the unit undergoing closure and will include volatile organic compounds, semivolatile organic compounds, and metals using applicable SW-846 Methods 8240, 8250, 6010, and 7470 respectively). Chain-of-custody forms will be initiated in the field and will accompany the samples to the laboratory.

Exhibit I-3
Financial Assurance Mechanism For Closure

safety-kleen®

January 21, 2003

Mr. Blake Harris
Financial Assurance Section
Illinois Environmental Protection Agency
1021 North Grand Avenue East
Springfield, IL 62794-9276

RE: Updated Financial Assurance

Chicago	ILD005450697
Elgin	ILD000805911
Caseyville	ILD981097819
Dolton	ILD980613913
Franklin Park	ILD000665869
Pekin	ILD093862811
Schaumberg	ILD079749073
Urbana	ILD981088388

Dear Mr. Harris:

Please find enclosed an original Certificate of Insurance under Policy Number PEC000659401, issued by Indian Harbor Insurance Company, for the above referenced Safety-Kleen facilities. This certificate has been amended to reflect the annual inflation increase of the closure and/or post-closure care cost by using the 2001 annual implicit price deflator of 1.023 as published by the U.S. Department of the Commerce. All other terms and conditions of the policy remain unchanged.

Please note my new contact information. My new telephone number is 803-359-7569; my new address is 164 Frontage Road, Lexington, SC 29073. If you have any questions, please contact me at the above number or at khodge@safety-kleen.com.

Sincerely,

Kathy Hodge

Kathy Hodge
Environmental Compliance Specialist

cc: Bob Burke
Matthew Sauvageau
Kevin Farmer

CERTIFICATE OF INSURANCE FOR CLOSURE AND/OR POST-CLOSURE CARE

ıe and Address of Insurer ein called the "Insurer"): Indian Harbor Insurance Company
Seaview House, 70 Seaview Avenue, Stamford, CT 06902-6040 (1)

ıe and Address of Insured ein called the "Insured"): Safety-Kleen Systems, Inc.
1301 Gervais Street, Suite 300, Columbia, SC 29201 (2)

lities Covered:

PA I.D. No. (3)	Closure Amount (4)	Post-Closure Amount (5)	Closure and Post-Closure Amounts (6)
IL005450697			
ıe: Safety-Kleen Systems, Inc.	$3,584,053	$569,473	$4,153,526
ress: 1445 W. 42nd Street, Chicago, IL 60609			
PA I.D. No. ILD000805911			
ıe: Safety-Kleen Systems, Inc.	$2,907,438	$3,125,759	$6,033,197
ress: 1506 E. Villa Street, Elgin, IL 60120			

ıse attach a separate page if more space is needed for all facilities.

e Amount: $19,004,387

cy Number: PEC000659401

ctive Date: January 25, 2003 (9)

Insurer hereby certifies that it has issued to the Insured the policy of insurance identified above to provide financial assurance for closure, post-closure corrective action (10) for the facilities identified above. The Insurer further warrants that such policy conforms in all ects with the requirements of 35 Illinois Administrative Code 724.243(e), 724.245(e), and 40 CFR Parts 265.143(d) and 264.145(d) as referenced in 243 and 725.245 respectfully, as applicable and as such regulations were constituted on the date shown immediately below. It is agreed that any pro- ɔn of the policy inconsistent with such regulations is hereby amended to eliminate such inconsistency.

ɜnever requested by the Director of the Illinois Environmental Protection Agency, hereafter called IEPA the Insurer agrees to furnish to the IEPA ɜctor a duplicate original of the policy listed above, including all endorsements thereon.

ɜ — (Authorized signature for Insurer)

ı Name John E.R. McGovern

Senior Underwriter

ıture of witness or notary:

ɜency is authorized to require that the Insured submit this document under Illinois Compiled Statutes, 1994, Chapter 415, Act 5, Section 21(f)(as amended). Failure ɜ may result in a civil penalty against the Insured of not to exceed $25,000 per day of violation. Falsification of this information by any person may constitute a Class ny, and may also carry a fine of not to exceed $25,000 per day for the first offense. This form has been approved by the Forms Management Center.

32 1203
151 Rev. Dec-96

	Closure Amounts 4	Post-Closure Amount 5	Corrective Action	Closure & Post-Closure Amounts 6
USEPA I.D. No. ILD981097819 3				
Name: Safety-Kleen Systems, Inc. Address: 20 Tucker Drive City: Caseyville, IL 62232	371,170	0	0	371,170
USEPA I.D. No. ILD980613913 3				
Name: Safety-Kleen Systems, Inc. Address: 633 E. 138th Street City: Dolton, IL 60419	7,964,530	0	122,415	8,086,945
USEPA I.D. No. ILD000665869 3				
Name: Safety-Kleen Systems, Inc. Address: 450 Domenic Court City: Franklin Park, IL 60131	0	0	0	0
USEPA I.D. No. ILD093862811 3				
Name: Safety-Kleen Systems, Inc. Address: RR 3/14249 VFW Road City: Pekin, IL 61554	183,457	0	0	183,457
USEPA I.D. No. ILD079749073 3				
Name: Safety-Kleen Systems, Inc. Address: 728 Morse Avenue City: Schaumberg, IL 60193	0	0	0	0
USEPA I.D. No. ILD981088388 3				
Name: Safety-Kleen Systems, Inc. Address: 500 W. Anthony Drive City: Urbana, IL 61801	149,389	26,703	0	176,092

Exhibit I-4
Hazardous Waste Facility Certificate of Liability Insurance

safety-kleen®

October 28, 2002

Mr. Blake Harris
Illinois Environmental Protection Agency
Planning and Reporting Section
Bureau of Land
1021 North Grand Avenue East
Springfield, Illinois 62794-9276

RE: Liability Insurance
Safety-Kleen Systems, Inc.

Dear Mr. Harris:

Please find enclosed an original Hazardous Waste Facility Certificate of Liability for the Safety-Kleen Systems, Inc. facilities located in Illinois. This Certificate, effective September 1, 2002 is issued by Greenwich Insurance Company under policy number PEC000709901.

If you have any questions regarding the above information, please call me at 803-933-4849.

Sincerely,

Kathy Hodge
Environmental Compliance Specialist

HAZARDOUS WASTE FACILITY CERTIFICATE OF LIABILITY INSURANCE

Greenwich Insurance Company, (the "Insurer, of Seaview House, Seaview Avenue, Stamford, CT 06902-6040 (2) hereby certifies that it has issued liability insurance covering bodily injury and property damage to Safety-Kleen Systems, Inc., (the "insured"), of 1301 Gervais St., Suite 300, Columbia, SC 29201 (3) in connection with the insured's obligation to demonstrate financial responsibility (4) under 35 Illinois Administrative Code Parts 724.247 or 725.247. The coverage applies at:

	Sudden Accidental Occurrences (6)	Nonsudden Accidental Occurrences (7)	Sudden and Nonsudden Accidental Occurrences (8)
PA I.D. No. ILD 000 805 929 (5)			
e Safety-Kleen Systems, Inc.			X
ress 306 Campus Drive			
y Arlington Heights, IL 60004			
PA I.D. No. ILD 981 097 819			
e Safety-Kleen Systems, Inc. (5-160-02)			
ress 30 Tucker Drive			
y Casetville, IL 62232			

ase attach a separate page if more space is needed for all facilities.

limits of liability are $ 4,000,000 (9) each occurrence and $ 8,000,000 (10) annual aggregate exclusive legal defense costs. The coverage is provided under policy number PEC000709901 (11) issued on 09/01/02 (12). The effective date of said policy is 09/01/02 (13).

The Insurer further certifies the following with respect to the insurance described in Paragraph 1:

(a) Bankruptcy or insolvency of the insured shall not relieve the Insurer of its obligations under the policy.

(b) The Insurer is liable for the payment of amounts within any deductible applicable to the policy, with a right of reimbursement by the insured for any such payment made by the Insurer. This provision does not apply with respect to that amount of any deductible for which coverage is demonstrated as specified in 35 Illinois Administrative Code 724.247(f) or 725.247.

(c) Whenever requested by the Director of the Illinois Environmental Protection Agency (IEPA), the Insurer agrees to furnish to the Director a signed duplicate original of the policy and all endorsements.

(d) Cancellation of the insurance, whether by the Insurer, the insured, a parent corporation providing insurance coverage for its subsidiary, or by a firm having an insurable interest in and obtaining liability insurance on behalf of the owner or operator of the hazardous waste management facility, will be effective only upon written notice and only after the expiration of 60 days after a copy of such written notice is received by the Director.

(e) Any other termination of the insurance will be effective only upon written notice and only after the expiration of thirty (30) days after a copy of such written notice is received by the IEPA Director.

:reby certify that the Insurer is licensed to transact the business of insurance, or eligible to provide ırance as an excess or surplus lines insurer, in one or more States.

IATURE Joseph S Catanese

NAME Joseph S. Catanese

.E Vice President

ORIZED REPRESENTATIVE OF Greenwich Insurance Company

:ESS OF REPRESENTATIVE c/o XL Environmental, Inc., 520 Eagleview Blvd., Exton, PA 19341

Agency is authorized to require that the insured submit this document under Illinois Compiled Statutes, 1994, Chapter 415, Act 5, Section 21(f)(as amended). e to do so may result in a civil penalty against the insured of not to exceed $25,000 per day of violation. Falsification of this information by any person may itute a Class 4 felony, and may also carry a fine of not to exceed $25,000 per days for the first offense. This form has been approved by the Forms gement Center.

532 1843

SAFETY-KLEEN

STATE OF ILLINOIS

The Safety-Kleen Facilities listed below are correct for sudden and non-sudden accidental occurrences.

Safety-Kleen Systems, Inc. 1445 West 42nd Street Chicago, IL 60609		ILD 005450697
Safety-Kleen Systems, Inc. 633 East 138th Street Dolton, IL 60419		ILD 980613913 ILD 000781614
Safety-Kleen Systems, Inc. 1500 East Villa Street Elgin, IL 60120	(5-034-01/03)	ILD 000805911
Safety-Kleen Systems, Inc. 412 Domenic Court Franklin, IL 60131	(5-034-04)	ILD 000665869
Safety-Kleen Systems, Inc. 9631 West 194th Place Mokena, IL 60448	(5-034-05)	ILD 000665851
Safety-Kleen Systems, Inc. Rural Route 93 Pekin, IL 61554	(5-136-0 1)	ILD 093862811
Safety-Kleen Systems, Inc. 728 Morse Avenue Schaumburg, IL 60193	(5-034-01)	ILD 079749073
Safety-Kleen Systems, Inc. 500 Anthony Drive Urbana, IL 61801	(5-033-01)	ILD 981088388

Exhibit I-5
Notice In Deed of Hazardous Waste Activity on Property

ILLINOIS STATE ENVIRONMENTAL REAL ESTATE NOTICE

This Notice dated October 17, 1991 is given by Safety-Kleen Corp., a Wisconsin corporation, 777 Big Timber Road, Elgin, Illinois 60123 ("Owner"), legal title holder to the real estate located in Tazewell County, Illinois, commonly known as: RR #3, Pekin, Illinois, and legally described on Exhibit A attached hereto and made a part hereof ("Real Estate").

This Notice is pursuant to 35 Illinois Administrative Code, ("IAC") sec. 724.219.

The Owner hereby serves notice that:

1. A portion of the Real Estate has been used to manage hazardous waste by Owner during the period from April 1, 1976 to the present date. Waste materials were removed from the site at the end of this period.

2. The Real Estate's use is restricted under 35 IAC Part 724, Subpart G.

3. The survey plat and record of the type, location and quantity of hazardous wastes disposed of within each area of the Real Estate is attached hereto as Exhibit B and has been filed with (i) the local zoning or other authority with jurisdiction over local land use and (ii) the Illinois Environmental Protection Agency.

4. This notice shall be recorded with the Tazewell County Recorder's Office, Court Street, Pekin, Illinois 61554.

SAFETY-KLEEN CORP., a
Wisconsin corporation

By: Scott E. Fore

Scott E. Fore
Vice President, Environmental,
Health & Safety

Attested by:

Robert W. Willmschen

Robert W. Willmschen, Jr.
Vice President/Secretary

EXHIBIT A

PARCEL 1:

Part of the Southwest quarter of Section 15, Township 24 North, Range 5 West of the Third P.M., Tazewell County, Illinois, bounded as follows:

Commencing at the Northwest corner of the Southwest quarter of Section 15, thence South 89° 52' East along the North line of the Southwest quarter along Section 15, 1118.20 feet, thence South 0° 14' West, a distance of 220 feet to the place of beginning, thence continuing South 0° 14' West, a distance of 130 feet, thence North 89° 52' West, a distance of 140 feet, thence North 0° 14' East, a distance of 130 feet, thence South 89° 52' East a distance of 140 feet to the place of beginning, containing .42 acre, more or less.

P.I.N. 10-15-303-010

PARCEL 2:

A part of the Southwest quarter of Section 15, Township 24 North, Range 5 West of the Third P.M., Tazewell County, Illinois, more particularly described as follows:

Commencing at the Northwest corner of the Southwest quarter of said Section 15; thence South 89° 52' East 988.20 feet; thence South 0° 14' West 20 feet to a point on the South right-of-way of a public road, said point being the place of beginning; thence continuing South 0° 14' West 200 feet; thence South 89° 52' East 130 feet; thence North 0° 14' East 200 feet; thence North 89° 52' West 130 feet to the place of beginning, containing 0.60 acres, more or less.

P.I.N. 10-10-15-303-008

PARCEL 3:

A part of the Southwest quarter of Section 15, Township 24 North, Range 5 West of the Third P.M., Tazewell County, Illinois, more particularly described as follows:

Commencing at the Northwest corner of the Southwest quarter of said Section 15, thence South 89° 52' East 988.20 feet; thence South 0° 14' West 20 feet to a point on the South right-of-way of a public road, said point being the place of beginning; thence South 00° 16' 54" West, a distance of 200.0 feet; thence North 89° 52' 00" West, a distance of 10.0 feet; thence South 00° 16' 54" West, a distance of 100.00 feet; thence North 89° 52' 00" West, a distance of 190.00 feet; thence North 00° 16' 54" East, a distance of 300.00 feet; thence South 89° 52' 00" East, a distance of 200.00 feet, to the place of beginning.

P.I.N. 10-15-303-001

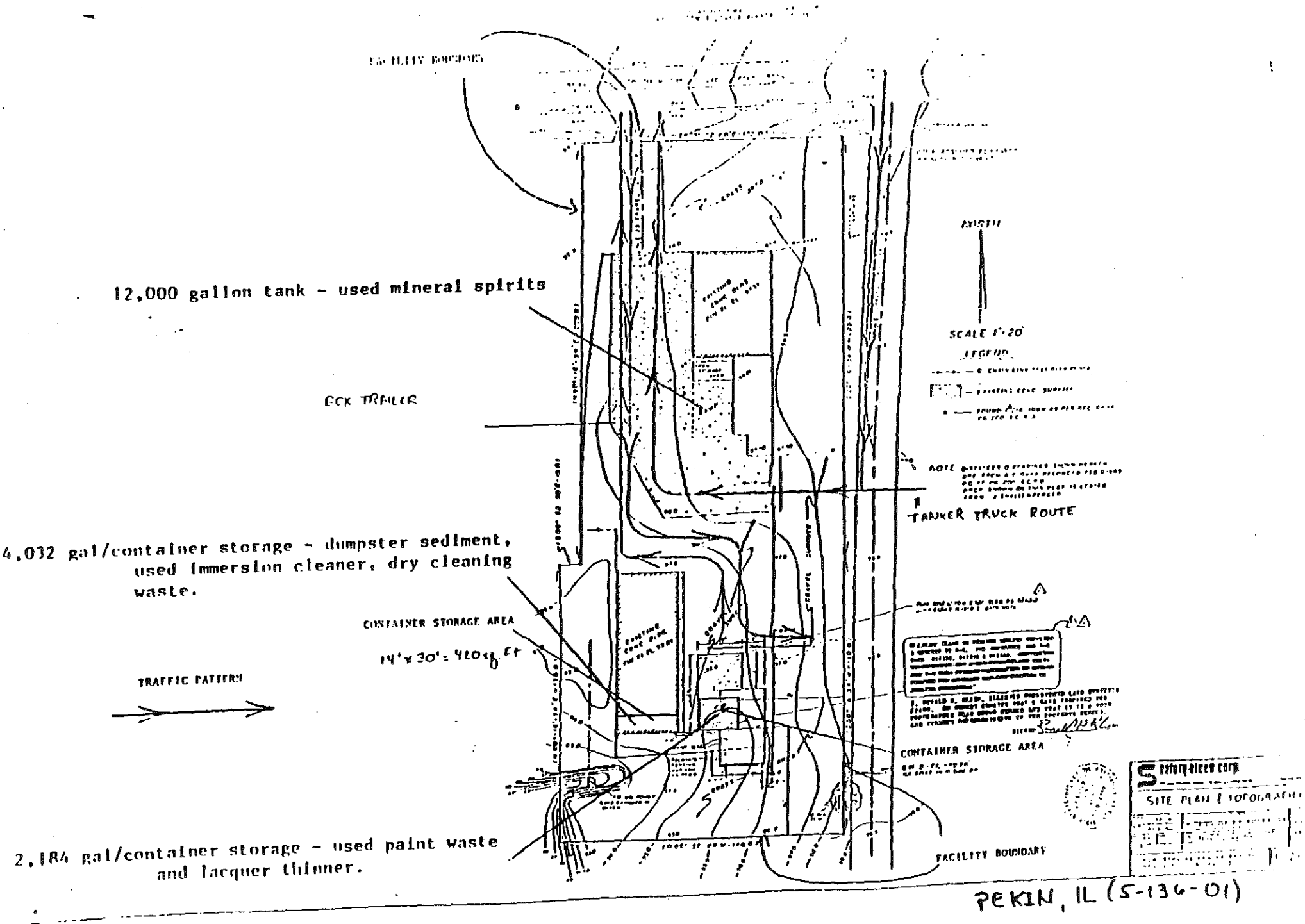
12,000 gallon tank - used mineral spirits
ECK TRAILER
4,032 gal/container storage - dumpster sediment, used immersion cleaner, dry cleaning waste.
CONTAINER STORAGE AREA
14'x30' = 420 sq ft
TRAFFIC PATTERN
2,184 gal/container storage - used paint waste and lacquer thinner.
NORTH
SCALE 1"=20'
TANKER TRUCK ROUTE
CONTAINER STORAGE AREA
FACILITY BOUNDARY
SITE PLAN & TOPOGRAPHY
PEKIN, IL (S-136-01)

APPENDIX J
OTHER FEDERAL LAWS

Exhibit J-1
Illinois EPA Permit to Operate Emission Source

ILLINOIS ENVIRONMENTAL PROTECTION AGENCY

P.O. BOX 19506, SPRINGFIELD, ILLINOIS 62794-9506

THOMAS V. SKINNER, DIRECTOR

217/782-2113

LIFETIME OPERATING PERMIT

PERMITTEE

Safety-Kleen Systems, Inc.
Attn: Kevin Farmer
R.R. #3 (14249 VFW Road)
Pekin, Illinois 61554

Application No.: 91040090
Applicant's Designation:
Subject: Waste Recycling Facility
Date Issued: December 16, 1999
Location: R. R. #3, Pekin

I.D. No.: 179801AAV
Date Received: October 28, 1999
Expiration Date: See Condition 1.

This permit is hereby granted to the above-designated Permittee to OPERATE emission unit(s) and/or air pollution control equipment consisting of:

A Waste Antifreeze Tank (10,000 Gallon)
A Spent Mineral Spirits Tank (20,000 Gallon)
A Clean Mineral Spirits Tank (20,000 Gallon)
Drum Return/Fill Station with Drum Washing
SK Premium 150 Solvent Storage Tank (12,000 Gallon)
A Drum Rinsing System (Spritzer)
A Continued Use Solvent Storage Tank (200 Gallon)

pursuant to the above-referenced application. This permit is subject to standard conditions attached hereto and the following special condition(s):

1a. This permit shall expire 180 days after the Illinois EPA sends a written request for the renewal of this permit.

b. This permit shall terminate if it is withdrawn or is superseded by a revised permit.

2. Emissions and operation of equipment shall not exceed the following limits:

Item of Equipment	Hours of Operation (Hours/Yr)	VOM Emissions (Lb/Hr)	VOM Emissions (Ton/Yr)
Return/Fill Station	1,300	8.0	5.2

These limits are based on the maximum allowable VOM emission rate pursuant to 35 Ill. Adm. Code 215.301 for a process emission source as well as information provided in the permit application. Compliance with annual limits shall be determined from a running total of twelve months of data.

3. This permit is issued based on negligible emissions of VOM from the waste antifreeze tank, the two mineral spirits tanks, the solvent storage tank, and the continued use solvent storage tank. For this purpose, emissions shall not exceed nominal emission rates of 0.1 lb/hour and 0.44 ton/year.

4. The emissions of Hazardous Air Pollutants (HAP) as listed in Section 112(b) of the Clean Air Act shall be less than 10 tons/year of any single HAP and 25 tons/year of any combination of such HAPs. As a result of this condition, this permit is issued based on the emissions of all HAPs from this source not triggering the requirements to obtain a Clean Air Act Permit Program Permit (CAAPP), and Section 112(G) of the Clean Air Act.

5. The Illinois EPA's issuance of this permit does not relieve the Permittee from complying with all applicable regulations including the need to obtain any construction permits prior to the construction of any new emission units and/or air pollution control equipment, and the need to revise this operation permit to include the operation of any equipment that is required to be permitted, that is not currently covered by this permit.

6. The Permittee shall maintain monthly records of the following items:

   a. Number of drums handled; and

   b. The quantity of solvent processed (gal/mo and gal/yr).

7. All records and logs required by this permit shall be retained at a readily accessible location at the source for at least three years from the date of entry and shall be made available for inspection and copying by the Illinois EPA upon request. Any records retained in an electronic format (e.g., computer) shall be capable of being retrieved and printed on paper during normal source office hours so as to be able to respond to an Illinois EPA request for records during the course of a source inspection.

8. If there is an exceedance of the requirements of this permit as determined by the records required by this permit, the Permittee shall submit a report to the Illinois EPA's Compliance Section in Springfield, Illinois within 30 days after the exceedance. The report shall include the emissions released in accordance with the recordkeeping requirements, a copy of the relevant records, and a description of the exceedance or violation and efforts to reduce emissions and future occurrences.

9. Two (2) copies of required reports and notifications concerning equipment operation or repairs, performance testing or a continuous monitoring system shall be sent to:

Illinois Environmental Protection Agency
Division of Air Pollution Control
Compliance Section (#40)
P.O. Box 19276
Springfield, Illinois 62794-9276

and one (1) copy shall be sent to the Illinois EPA's regional office at the following address unless otherwise indicated:

Illinois Environmental Protection Agency
Division of Air Pollution Control
5415 North University
Peoria, Illinois 61614

10. Persons with lifetime operating permits must obtain a revised permit for any of the following changes at the source:

a. An increase in emissions above the amount the emission unit or the source is permitted to emit;

b. A modification;

c. A change in operations that will result in the source's noncompliance with conditions in the existing permit; or

d. A change in ownership, company name, or address, so that the application or existing permit is no longer accurate.

It should be noted that the two waste oil storage tanks are exempt from state permit requirements, pursuant to 35 Ill. Adm. Code 201.146(n).

If you have any questions on this permit, please contact Nathan Frank at 217/782-2113.

Donald E. Sutton, P.E.
Manager, Permit Section
Division of Air Pollution Control

DES:NAF:jar

cc: Region 2

STATE OF ILLINOIS
ENVIRONMENTAL PROTECTION AGENCY
DIVISION OF AIR POLLUTION CONTROL
P.O. BOX 19506
SPRINGFIELD, IL 62794-9506

STANDARD CONDITIONS FOR LIFETIME OPERATING PERMITS

ıly 1, 1998

ıe Illinois Environmental Protection Act [415 ILCS 5/39 (formerly Illinois Revised Statutes, Chapter 111-1/2, ɜction 1039)] grants the Illinois Environmental Protection Agency authority to impose conditions on permits hich it issues.

. The issuance of this Permit does not release the Permittee from compliance with state and federal regulations which are part of the Illinois State Implementation Plan, as well as with other applicable statutes and regulations of the United States or the State of Illinois, or with applicable local laws, ordinances and regulations.

. The Illinois EPA has issued this Permit based upon the information submitted by the Permittee in the permit application. Any misinformation, false statement or misrepresentation in the application shall be grounds for the revocation under 35 Ill. Adm. Code 201.166.

. a. The Permittee shall not authorize, cause, direct or allow any modification as defined in 35 Ill. Adm. Code 201.102, of equipment, operations or practices which are reflected in the permit application as submitted, until the appropriate permit is obtained from the Illinois EPA.

b. The Permittee shall obtain a new or revised permit under Section 39.5 of the Act, if the source no longer meets the applicability criteria of 35 Ill. Adm. Code 201.169 because of changes in emissions units or control equipment.

c. The Permittee shall obtain a revised permit prior to any of the following changes at the source:

i. An increase in emissions above the amount the emission unit or the source is permitted to emit; or

ii. A modification; or

iii. A change in operations that will result in the source's noncompliance with a condition in the existing permit; or

iv. A change in ownership, company name, or address, so that the application or existing permit is no longer accurate.

. a. This Permit only covers emission units and control equipment while physically present at the indicated source location. Unless the Permit specifically provides for equipment relocation, this Permit is void for an item of equipment on the day it is removed from the permitted location, or if all equipment is removed.

b. The Permittee shall notify the Illinois EPA in writing to withdraw the Permit if all operations at the source have been permanently discontinued.

Directory
Environmental Protection Agency
Bureau of Air

September 1, 1992

For assistance in preparing a permit application, contact the Permit Section:

Illinois Environmental Protection Agency
Division of Air Pollution Control
Permit Section
2200 Churchill Road
Springfield, Illinois 62706
217/782-2113

Or contact a regional office of the Field Operations Section. The regional offices and their areas of responsibility are shown on the map. The addresses and telephone numbers of the regional offices are as follows:

Illinois EPA
Region 1
Intercontinental Center
1701 South 1st Avenue
Maywood, Illinois 60153
708/531-5900

Illinois EPA
Region 2
5415 North University
Peoria, Illinois 61614
309/693-5461

Illinois EPA
Region 3
2009 Mall Street
Collinsville, Illinois 62234
618/346-5120

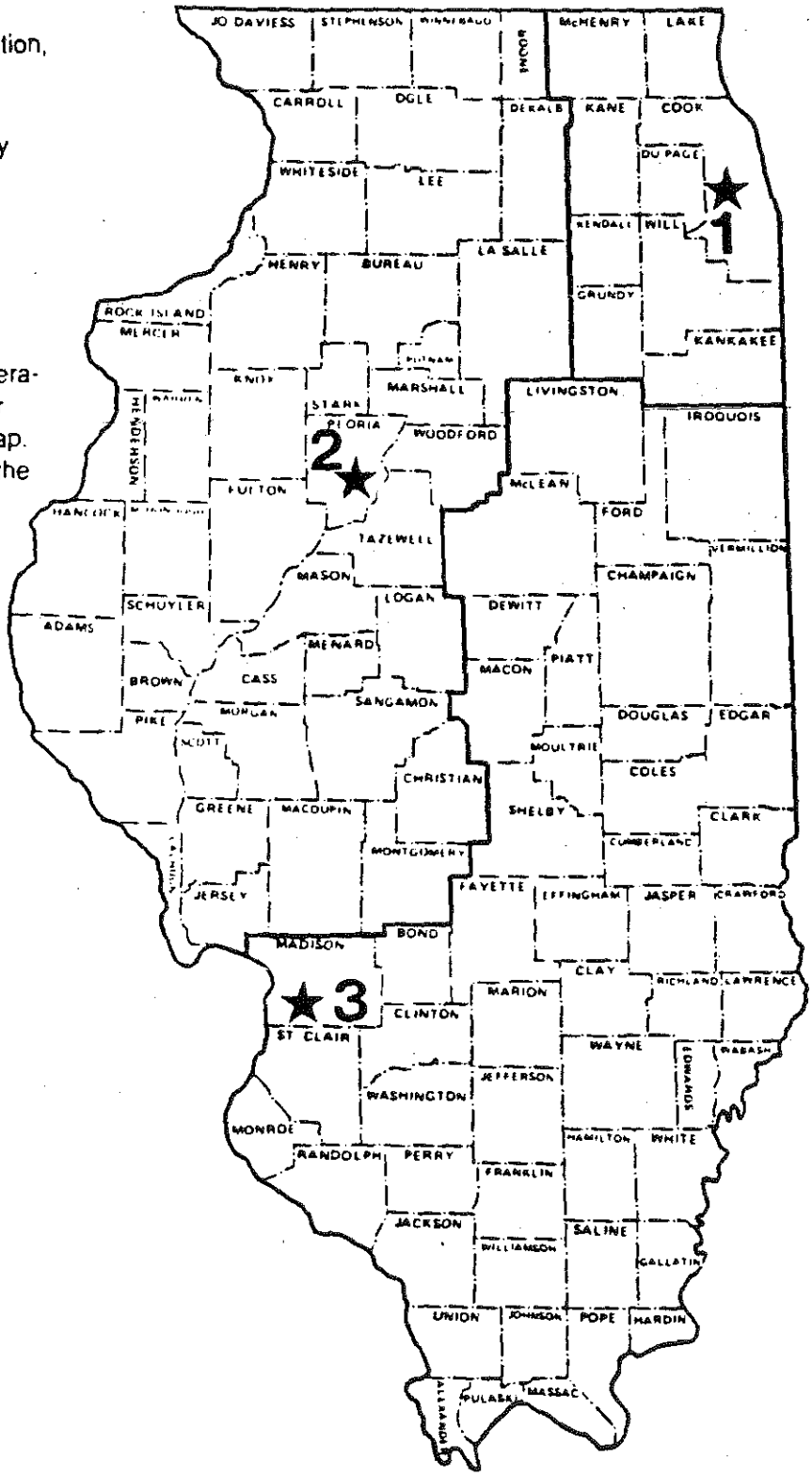

Printed on Recycled Paper

Exhibit J-2
IEPA Permit to Discharge Stormwater (NPDES)

ILLINOIS ENVIRONMENTAL PROTECTION AGENCY

1021 North Grand Avenue East, P.O. Box 19276, Springfield, Illinois 62794-9276 Mary A. Gade, Director

217/782-0610

RECEIVED
DEC 1 9 1997
ENVIRONMENTAL AFFAIRS
SAFETY-KLEEN CORP.

December 16, 1997

Safety - Kleen Corporation
One Brinkman Way
Elgin, Illinois 60123

Re: Safety - Kleen Corporation -- Pekin Facility
NPDES Permit No. IL0072036
Final Permit

Gentlemen:

Attached is the final NPDES Permit for your discharge. The Permit as issued covers discharge limitations, monitoring, and reporting requirements. The failure of you to meet any portion of the Permit could result in civil and/or criminal penalties. The Illinois Environmental Protection Agency is ready and willing to assist you in interpreting any of the conditions of the Permit as they relate specifically to your discharge.

The final decision of the Agency is to terminate the General Permit No. ILR003468 effective immediately and to cover your discharge under NPDES Permit No. IL0072036. The Permit as issued is effective as of the date indicated on the first page of the Permit. You have the right to appeal any condition of the Permit to the Illinois Pollution Control Board within a 35 day period following the issuance date.

Should you have questions concerning the Permit, please contact Beth Unser at the telephone number indicated above.

Very truly yours,

Thomas G. McSwiggin, P.E.
Manager, Permit Section
Division of Water Pollution Control

TGM:SFN:BAU\97100706.PSJ

Attachment: Final Permit

cc: Records
Compliance Assurance Section
Peoria Region
Facility

NPDES Permit No. IL0072036

Effluent Limitations and Monitoring

	LOAD LIMITS lbs/day DAF (DMF)		CONCENTRATION LIMITS mg/l			
PARAMETER	30 DAY AVERAGE	DAILY MAXIMUM	30 DAY AVERAGE	DAILY MAXIMUM	SAMPLE FREQUENCY	SAMPLE TYPE

From the effective date of this permit until the expiration date, the effluent of the following discharge(s) shall be monitored and limited ll times as follows:

Outfall(s): 001*

e Special Conditions 3 and 4.

NPDES Permit No. IL0072036

Illinois Environmental Protection Agency

Division of Water Pollution Control

1021 North Grand Avenue East

Post Office Box 19276

Springfield, Illinois 62794-9276

NATIONAL POLLUTANT DISCHARGE ELIMINATION SYSTEM

New (NPDES) Permit

iration Date: November 30, 2002

Issue Date: December 16, 1997
Effective Date: December 16, 1997

ne and Address of Permittee:

ety - Kleen Corporation
e Brinkman Way
in, Illinois 60123

Facility Name and Address:

Safety - Kleen Corporation
Rural Route #3, 14249 VFW Road
Pekin, Illinois 61554
(Tazewell County)

charge Number and Name:

Storm Water Runoff

Receiving Waters:

Unnamed Tributary to Illinois River

ompliance with the provisions of the Illinois Environmental Protection Act, Title 35 of Ill. Adm. Code, Subtitle C and/or Subtitle D, Chapter nd the Clean Water Act (CWA), the above-named permittee is hereby authorized to discharge at the above location to the above-named iving stream in accordance with the standard conditions and attachments herein.

nittee is not authorized to discharge after the above expiration date. In order to receive authorization to discharge beyond the ration date, the permittee shall submit the proper application as required by the Illinois Environmental Protection Agency (IEPA) not than 180 days prior to the expiration date.

Thomas G. McSwiggin, P.E.
Manager, Permit Section
Division of Water Pollution Control

1:BAU\97100706.PSJ

NPDES Permit No. IL0072036

Special Conditions

ECIAL CONDITION 1. For the purpose of this permit, this discharge is limited to storm water, free from process and other wastewater charges.

ECIAL CONDITION 2. If an applicable effluent standard or limitation is promulgated under Sections 301(b)(2)(C) and (D), 304(b)(2), l 307(a)(2) of the Clean Water Act and that effluent standard or limitation is more stringent than any effluent limitation in the permit or itrols a pollutant not limited in the NPDES Permit, the Agency shall revise or modify the permit in accordance with the more stringent ndard or prohibition and shall so notify the permittee.

ECIAL CONDITION 3. Form 2F shall be completed and submitted to the Agency within 365 days following the effective date of this mit. The permit may be modified as a result of the required analyses to include limits and/or monitoring requirements for specific ameters and the appropriate monitoring frequencies. Modification under this special condition shall follow public notice and opportunity nearing.

ECIAL CONDITION 4.

ORM WATER POLLUTION PREVENTION PLAN (SWPPP)

A storm water pollution prevention plan shall be developed by the permittee for the storm water associated with industrial activity at this facility. The plan shall identify potential sources of pollution which may be expected to affect the quality of storm water discharges associated with the industrial activity at the facility. In addition, the plan shall describe and ensure the implementation of practices which are to be used to reduce the pollutants in storm water discharges associated with industrial activity at the facility and to assure compliance with the terms and conditions of this permit.

The plan shall be completed within 180 days of the effective date of this permit. Plans shall provide for compliance with the terms of the plan within 365 days of the effective date of this permit. The owner or operator of the facility shall make a copy of the plan available to the Agency at any reasonable time upon request. [Note: If the plan has already been developed and implemented it shall be maintained in accordance with all requirements of this special condition.]

The permittee may be notified by the Agency at any time that the plan does not meet the requirements of this condition. After such notification, the permittee shall make changes to the plan and shall submit a written certification that the requested changes have been made. Unless otherwise provided, the permittee shall have 30 days after such notification to make the changes.

The discharger shall amend the plan whenever there is a change in construction, operation, or maintenance which may affect the discharge of significant quantities of pollutants to the waters of the State or if a facility inspection required by paragraph G of this condition indicates that an amendment is needed. The plan should also be amended if the discharger is in violation of any conditions of this permit, or has not achieved the general objective of controlling pollutants in storm water discharges. Amendments to the plan shall be made within the shortest reasonable period of time, and shall be provided to the Agency for review upon request.

The plan shall provide a description of potential sources which may be expected to add significant quantities of pollutants to storm water discharges, or which may result in non-storm water discharges from storm water outfalls at the facility. The plan shall include, at a minimum, the following items:

1. A topographic map extending one-quarter mile beyond the property boundaries of the facility, showing: the facility, surface water bodies, wells (including injection wells), seepage pits, infiltration ponds, and the discharge points where the facility's storm water discharges to a municipal storm drain system or other water body. The requirements of this paragraph may be included on the site map if appropriate.

2. A site map showing:

   i. The storm water conveyance and discharge structures;

   ii. An outline of the storm water drainage areas for each storm water discharge point;

   iii. Paved areas and buildings;

NPDES Permit No. IL0072036

Special Conditions

iv. Areas used for outdoor manufacturing, storage, or disposal of significant materials, including activities that generate significant quantities of dust or particulates.

v. Location of existing storm water structural control measures (dikes, coverings, detention facilities, etc.);

vi. Surface water locations and/or municipal storm drain locations

vii. Areas of existing and potential soil erosion;

viii. Vehicle service areas;

ix. Material loading, unloading, and access areas.

3. A narrative description of the following:

i. The nature of the industrial activities conducted at the site, including a description of significant materials that are treated, stored or disposed of in a manner to allow exposure to storm water;

ii. Materials, equipment, and vehicle management practices employed to minimize contact of significant materials with storm water discharges;

iii. Existing structural and non-structural control measures to reduce pollutants in storm water discharges;

iv. Industrial storm water discharge treatment facilities;

v. Methods of onsite storage and disposal of significant materials;

4. A list of the types of pollutants that have a reasonable potential to be present in storm water discharges in significant quantities.

5. An estimate of the size of the facility in acres or square feet, and the percent of the facility that has impervious areas such as pavement or buildings.

6. A summary of existing sampling data describing pollutants in storm water discharges.

The plan shall describe the storm water management controls which will be implemented by the facility. The appropriate controls shall reflect identified existing and potential sources of pollutants at the facility. The description of the storm water management controls shall include:

1. Storm Water Pollution Prevention Personnel - Identification by job titles of the individuals who are responsible for developing, implementing, and revising the plan.

2. Preventive Maintenance - Procedures for inspection and maintenance of storm water conveyance system devices such as oil/water separators, catch basins, etc., and inspection and testing of plant equipment and systems that could fail and result in discharges of pollutants to storm water.

3. Good Housekeeping - Good housekeeping requires the maintenance of clean, orderly facility areas that discharge storm water. Material handling areas shall be inspected and cleaned to reduce the potential for pollutants to enter the storm water conveyance system.

4. Spill Prevention and Response - Identification of areas where significant materials can spill into or otherwise enter the storm water conveyance systems and their accompanying drainage points. Specific material handling procedures, storage requirements, spill clean up equipment and procedures should be identified, as appropriate. Internal notification procedures for spills of significant materials should be established.

NPDES Permit No. IL0072036

Special Conditions

5. Storm Water Management Practices - Storm water management practices are practices other than those which control the source of pollutants. They include measures such as installing oil and grit separators, diverting storm water into retention basins, etc. Based on assessment of the potential of various sources to contribute pollutants, measures to remove pollutants from storm water discharge shall be implemented. In developing the plan, the following management practices shall be considered:

   i. Containment - Storage within berms or other secondary containment devices to prevent leaks and spills from entering storm water runoff;

   ii. Oil & Grease Separation - Oil/water separators, booms, skimmers or other methods to minimize oil contaminated storm water discharges;

   iii. Debris & Sediment Control - Screens, booms, sediment ponds or other methods to reduce debris and sediment in storm water discharges;

   iv. Waste Chemical Disposal - Waste chemicals such as antifreeze, degreasers and used oils shall be recycled or disposed of in an approved manner and in a way which prevents them from entering storm water discharges.

   v. Storm Water Diversion - Storm water diversion away from materials manufacturing, storage and other areas of potential storm water contamination;

   vi. Covered Storage or Manufacturing Areas - Covered fueling operations, materials manufacturing and storage areas to prevent contact with storm water.

6. Sediment and Erosion Prevention - The plan shall identify areas which due to topography, activities, or other factors, have a high potential for significant soil erosion and describe measures to limit erosion.

7. Employee Training - Employee training programs shall inform personnel at all levels of responsibility of the components and goals of the storm water pollution control plan. Training should address topics such as spill response, good housekeeping and material management practices. The plan shall identify periodic dates for such training.

8. Inspection Procedures - Qualified plant personnel shall be identified to inspect designated equipment and plant areas. A tracking or follow-up procedure shall be used to ensure appropriate response has been taken in response to an inspection. Inspections and maintenance activities shall be documented and recorded.

The permittee shall conduct an annual facility inspection to verify that all elements of the plan, including the site map, potential pollutant sources, and structural and non-structural controls to reduce pollutants in industrial storm water discharges are accurate. Observations that require a response and the appropriate response to the observation shall be retained as part of the plan. Records documenting significant observations made during the site inspection shall be submitted to the Agency in accordance with the reporting requirements of this permit.

This plan should briefly describe the appropriate elements of other program requirements, including Spill Prevention Control and Countermeasures (SPCC) plans required under Section 311 of the CWA and the regulations promulgated thereunder, and Best Management Programs under 40 CFR 125.100.

The plan is considered a report that shall be available to the public under Section 308(b) of the CWA. The permittee may claim portions of the plan as confidential business information, including any portion describing facility security measures.

The plan shall include the signature and title of the person responsible for preparation of the plan and include the date of initial preparation and each amendment thereto.

Construction Authorization

Authorization is hereby granted to construct treatment works and related equipment that may be required by the Storm Water Pollution Prevention developed pursuant to this permit.

NPDES Permit No. IL0072036

Special Conditions

is Authorization is issued subject to the following condition(s).

If any statement or representation is found to be incorrect, this authorization may be revoked and the permittee there upon waives all rights thereunder.

The issuance of this authorization (a) does not release the permittee from any liability for damage to persons or property caused by or resulting from the installation, maintenance or operation of the proposed facilities; (b) does not take into consideration the structural stability of any units or part of this project; and (c) does not release the permittee from compliance with other applicable statutes of the State of Illinois, or other applicable local law, regulations or ordinances.

Plans and specifications of all treatment equipment being included as part of the stormwater management practice shall be included in the SWPPP.

Construction activities which result from treatment equipment installation, including cleaning, grading and excavation activities which result in the disturbance of five acres or more of land area, are not covered by this authorization. The permittee shall contact the IEPA regarding the required permit(s).

REPORTING

The facility shall submit an annual inspection report to the Illinois Environmental Protection Agency. The report shall include results of the annual facility inspection which is required by Part G of the Storm Water Pollution Prevention Plan of this permit. The report shall also include documentation of any event (spill, treatment unit malfunction, etc.) which would require an inspection, results of the inspection, and any subsequent corrective maintenance activity. The report shall be completed and signed by the authorized facility employee(s) who conducted the inspection(s).

The first report shall contain information gathered during the one year time period beginning with the effective date of coverage under this permit and shall be submitted no later than 60 days after this one year period has expired. Each subsequent report shall contain the previous year's information and shall be submitted no later than one year after the previous year's report was due.

Annual inspection reports shall be mailed to the following address:

Illinois Environmental Protection Agency
Bureau of Water
Compliance Assurance Section
Annual Inspection Report
1021 North Grand Avenue East
Post Office Box 19276
Springfield, Illinois 62794-9276

If the facility performs inspections more frequently than required by this permit, the results shall be included as additional information in the annual report.

ATTACHMENT H

Standard Conditions

Definitions

Act means the Illinois Environmental Protection Act, Ch. 111 1/2 Ill. Rev. Stat., Sec. 1001-1052 as Amended.

Agency means the Illinois Environmental Protection Agency.

Board means the Illinois Pollution Control Board.

Clean Water Act (formerly referred to as the Federal Water Pollution Control Act) means Pub. L. 92-500, as amended, 33 U.S.C. 1251 et seq.

NPDES (National Pollutant Discharge Elimination System) means the national program for issuing, modifying, revoking and reissuing, terminating, monitoring and enforcing permits, and imposing and enforcing pretreatment requirements, under Sections 307, 402, 318 and 405 of the Clean Water Act.

USEPA means the United States Environmental Protection Agency.

Daily Discharge means the discharge of a pollutant measured during a calendar day or any 24-hour period that reasonably represents the calendar day for purposes of sampling. For pollutants with limitations expressed in units of mass, the "daily discharge" is calculated as the total mass of the pollutant discharged over the day. For pollutants with limitations expressed in other units of measurements, the "daily discharge" is calculated as the average measurement of the pollutant over the day.

Maximum Daily Discharge Limitation (daily maximum) means the highest allowable daily discharge.

Average Monthly Discharge Limitation (30 day average) means the highest allowable average of daily discharges over a calendar month, calculated as the sum of all daily discharges measured during a calendar month divided by the number of daily discharges measured during that month.

Average Weekly Discharge Limitation (7 day average) means the highest allowable average of daily discharges over a calendar week, calculated as the sum of all daily discharges measured during a calendar week divided by the number of daily discharges measured during that week.

Best Management Practices (BMPs) means schedules of activities, prohibitions of practices, maintenance procedures, and other management practices to prevent or reduce the pollution of waters of the State. BMPs also include treatment requirements, operating procedures, and practices to control plant site runoff, spillage or leaks, sludge or waste disposal, or drainage from raw material storage.

Aliquot means a sample of specified volume used to make up a total composite sample.

Grab Sample means an individual sample of at least 100 milliliters collected at a randomly-selected time over a period not exceeding 15 minutes.

24 Hour Composite Sample means a combination of at least 8 sample aliquots of at least 100 milliliters, collected at periodic intervals during the operating hours of a facility over a 24-hour period.

8 Hour Composite Sample means a combination of at least 3 sample aliquots of at least 100 milliliters, collected at periodic intervals during the operating hours of a facility over an 8-hour period.

Flow Proportional Composite Sample means a combination of sample aliquots of at least 100 milliliters collected at periodic intervals such that either the time interval between each aliquot or the volume of each aliquot is proportional to either the stream flow at the time of sampling or the total stream flow since the collection of the previous aliquot.

(1) **Duty to comply.** The permittee must comply with all conditions of this permit. Any permit noncompliance constitutes a violation of the Act and is grounds for enforcement action, permit termination, revocation and reissuance, modification, or for denial of a permit renewal application. The permittee shall comply with effluent standards or prohibitions established under Section 307(a) of the Clean Water Act for toxic pollutants within the time provided in the regulations that establish these standards or prohibitions, even if the permit has not yet been modified to incorporate the requirement.

(2) **Duty to reapply.** If the permittee wishes to continue an activity regulated by this permit after the expiration date of this permit, the permittee must apply for and obtain a new permit. If the permittee submits a proper application as required by the Agency no later than 180 days prior to the expiration date, this permit shall continue in full force and effect until the final Agency decision on the application has been made.

(3) **Need to halt or reduce activity not a defense.** It shall not be a defense for a permittee in an enforcement action that it would have been necessary to halt or reduce the permitted activity in order to maintain compliance with the conditions of this permit.

(4) **Duty to mitigate.** The permittee shall take all reasonable steps to minimize or prevent any discharge in violation of this permit which has a reasonable likelihood of adversely affecting human health or the environment.

(5) **Proper operation and maintenance.** The permittee shall at all times properly operate and maintain all facilities and systems of treatment and control (and related appurtenances) which are installed or used by the permittee to achieve compliance with the conditions of this permit. Proper operation and maintenance includes effective performance, adequate funding, adequate operator staffing and training, and adequate laboratory and process controls, including appropriate quality assurance procedures. This provision requires the operation of back-up, or auxiliary facilities, or similar systems only when necessary to achieve compliance with the conditions of the permit.

(6) **Permit actions.** This permit may be modified, revoked and reissued, or terminated for cause by the Agency pursuant to 40 CFR 122.62. The filing of a request by the permittee for a permit modification, revocation and reissuance, or termination, or a notification of planned changes or anticipated noncompliance, does not stay any permit condition.

(7) **Property rights.** This permit does not convey any property rights of any sort, or any exclusive privilege.

(8) **Duty to provide information.** The permittee shall furnish to the Agency within a reasonable time, any information which the Agency may request to determine whether cause exists for modifying, revoking and reissuing, or terminating this permit, or to determine compliance with the permit. The permittee shall also furnish to the Agency, upon request, copies of records required to be kept by this permit.

(9) **Inspection and entry.** The permittee shall allow an authorized representative of the Agency, upon the presentation of credentials and other documents as may be required by law, to:

(a) Enter upon the permittee's premises where a regulated facility or activity is located or conducted, or where records must be kept under the conditions of this permit;

(b) Have access to and copy, at reasonable times, any records that must be kept under the conditions of this permit;

(c) Inspect at reasonable times any facilities, equipment (including monitoring and control equipment), practices, or operations regulated or required under this permit; and

(d) Sample or monitor at reasonable times, for the purpose of assuring permit compliance, or as otherwise authorized by the Act, any substances or parameters at any location.

(10) **Monitoring and records.**

(a) Samples and measurements taken for the purpose of monitoring shall be representative of the monitored activity.

(b) The permittee shall retain records of all monitoring information, including all calibration and maintenance records, and all original strip chart recordings for continuous monitoring instrumentation, copies of all reports required by this permit, and records of all data used to complete the application for this permit, for a period of at least 3 years from the date of this permit, measurement, report or application. This period may be extended by request of the Agency at any time.

(c) Records of monitoring information shall include:

(1) The date, exact place, and time of sampling or measurements;

(2) The individual(s) who performed the sampling or measurements;

(3) The date(s) analyses were performed;

(4) The individual(s) who performed the analyses;

(5) The analytical techniques or methods used; and

(6) The results of such analyses.

(d) Monitoring must be conducted according to test procedures approved under 40 CFR Part 136, unless other test procedures have been specified in this permit. Where no test procedure under 40 CFR Part 136 has been approved, the permittee must submit to the Agency a test method for approval. The permittee shall calibrate and perform maintenance procedures on all monitoring and analytical instrumentation at intervals to ensure accuracy of measurements.

(11) **Signatory requirement.** All applications, reports or information submitted to the Agency shall be signed and certified.

(a) **Application.** All permit applications shall be signed as follows:

(1) For a corporation: by a principal executive officer of at least the level of vice president or a person or position having overall responsibility for environmental matters for the corporation;

(2) For a partnership or sole proprietorship: by a general partner or the proprietor, respectively; or

(3) For a municipality, State, Federal, or other public agency: by either a principal executive officer or ranking elected official.

(b) **Reports.** All reports required by permits, or other information requested by the Agency shall be signed by a person described in paragraph (a) or by a duly authorized representative of that person. A person is a duly authorized representative only if:

(1) The authorization is made in writing by a person described in paragraph (a); and

(2) The authorization specifies either an individual or a position responsible for the overall operation of the facility, from which the discharge originates, such as a plant manager, superintendent or person of equivalent responsibility; and

(3) The written authorization is submitted to the Agency.

(c) Changes of Authorization. If an authorization under (b) is no longer accurate because a different individual or position has responsibility for the overall operation of the facility, a new authorization satisfying the requirements of (b) must be submitted to the Agency prior to or together with any reports, information, or applications to be signed by an authorized representative.

(12) Reporting requirements.

(a) Planned changes. The permittee shall give notice to the Agency as soon as possible of any planned physical alterations or additions to the permitted facility.

(b) Anticipated noncompliance. The permittee shall give advance notice to the Agency of any planned changes in the permitted facility or activity which may result in noncompliance with permit requirements.

(c) Compliance schedules. Reports of compliance or noncompliance with, or any progress reports on, interim and final requirements contained in any compliance schedule of this permit shall be submitted no later than 14 days following each schedule date.

(d) Monitoring reports. Monitoring results shall be reported at the intervals specified elsewhere in this permit.

(1) Monitoring results must be reported on a Discharge Monitoring Report (DMR).

(2) If the permittee monitors any pollutant more frequently than required by the permit, using test procedures approved under 40 CFR 136 or as specified in the permit, the results of this monitoring shall be included in the calculation and reporting of the data submitted in the DMR.

(3) Calculations for all limitations which require averaging of measurements shall utilize an arithmetic mean unless otherwise specified by the Agency in the permit.

(e) Twenty-four hour reporting. The permittee shall report any noncompliance, which may endanger health or the environment. Any information shall be provided orally within 24 hours from the time the permittee becomes aware of the circumstances. A written submission shall also be provided within 5 days of the time the permittee becomes aware of the circumstances. The written submission shall contain a description of the noncompliance and its cause; the period of noncompliance, including exact dates and times; and if the noncompliance has not been corrected, the anticipated time it is expected to continue; and steps taken or planned to reduce, eliminate, and prevent reoccurrence of the noncompliance. The following shall be included as information which must be reported within 24 hours:

(1) Any unanticipated bypass which exceeds any effluent limitation in the permit;

(2) Violation of a maximum daily discharge limitation for any of the pollutants listed by the Agency in the permit to be reported within 24 hours.

The Agency may waive the written report on a case-by-case basis if the oral report has been received within 24 hours.

(f) Other noncompliance. The permittee shall report all instances of noncompliance not reported under paragraphs (12)(c), (d), or (e), at the time monitoring reports are submitted. The reports shall contain the information listed in paragraph (12)(e).

(g) Other information. Where the permittee becomes aware that it failed to submit any relevant facts in a permit application, or submitted incorrect information in a permit application, or in any report to the Agency, it shall promptly submit such facts or information.

(13) Transfer of permits. A permit may be automatically transferred to a new permittee if:

(a) The current permittee notifies the Agency at least 30 days in advance of the proposed transfer date;

(b) The notice includes a written agreement between the existing and new permittees containing a specific date for transfer of permit responsibility, coverage and liability between the current and new permittees; and

(c) The Agency does not notify the existing permittee and the proposed new permittee of its intent to modify or revoke and reissue the permit. If this notice is not received, the transfer is effective on the date specified in the agreement.

(14) All manufacturing, commercial, mining, and silvicultural dischargers must notify the Agency as soon as they know or have reason to believe:

(a) That any activity has occurred or will occur which would result in the discharge of any toxic pollutant identified under Section 307 of the Clean Water Act which is not limited in the permit, if that discharge will exceed the highest of the following notification levels:

(1) One hundred micrograms per liter (100 ug/l);

(2) Two hundred micrograms per liter (200 ug/l) for acrolein and acrylonitrile; five hundred micrograms per liter (500 ug/l) for 2,4-dinitrophenol and for 2-methyl-4,6-dinitrophenol; and one milligram per liter (1 mg/l) for antimony;

(3) Five (5) times the maximum concentration value reported for that pollutant in the NPDES permit application; or

(4) The level established by the Agency in this permit.

(b) That they have begun or expect to begin to use or manufacture as an intermediate or final product or byproduct any toxic pollutant which was not reported in the NPDES permit application.

(15) All Publicly Owned Treatment Works (POTWs) must provide adequate notice to the Agency of the following:

(a) Any new introduction of pollutants into that POTW from an indirect discharger which would be subject to Sections 301 or 306 of the Clean Water Act if it were directly discharging those pollutants; and

(b) Any substantial change in the volume or character of pollutants being introduced into that POTW by a source introducing pollutants into the POTW at the time of issuance of the permit.

(c) For purposes of this paragraph, adequate notice shall include information on (i) the quality and quantity of effluent introduced into the POTW, and (ii) any anticipated impact of the change on the quantity or quality of effluent to be discharged from the POTW.

(16) If the permit is issued to a publicly owned or publicly regulated treatment works, the permittee shall require any industrial user of such treatment works to comply with federal requirements concerning:

(1) User charges pursuant to Section 204(b) of the Clean Water Act, and applicable regulations appearing in 40 CFR 35;

(2) Toxic pollutant effluent standards and pretreatment standards pursuant to Section 307 of the Clean Water Act; and

(3) Inspection, monitoring and entry pursuant to Section 308 of the Clean Water Act.

(17) If an applicable standard or limitation is promulgated under Section 301(b)(2)(C) and (D), 304(b)(2), or 307(a)(2) and that effluent standard or limitation is more stringent than any effluent limitation in the permit, or controls a pollutant not limited in the permit, the permit shall be promptly modified or revoked, and reissued to conform to that effluent standard or limitation.

(18) Any authorization to construct issued to the permittee pursuant to 35 Ill. Adm. Code 309.154 is hereby incorporated by reference as a condition of this permit.

(19) The permittee shall not make any false statement, representation or certification in any application, record, report, plan or other document submitted to the Agency or the USEPA, or required to be maintained under this permit.

(20) The Clean Water Act provides that any person who violates a permit condition implementing Sections 301, 302, 306, 307, 308, 318, or 405 of the Clean Water Act is subject to a civil penalty not to exceed $10,000 per day of such violation. Any person who willfully or negligently violates permit conditions implementing Sections 301, 302, 306, 307, or 308 of the Clean Water Act is subject to a fine of not less than $2,500, nor more than $25,000 per day of violation, or by imprisonment for not more than one year, or both.

(21) The Clean Water Act provides that any person who falsifies, tampers with, or knowingly renders inaccurate any monitoring device or method required to be maintained under permit shall, upon conviction, be punished by a fine of not more than $10,000 per violation, or by imprisonment for not more than 6 months per violation, or by both.

(22) The Clean Water Act provides that any person who knowingly makes any false statement, representation, or certification in any record or other document submitted or required to be maintained under the permit shall, including monitoring reports or reports of compliance or non-compliance shall, upon conviction, be punished by a fine of not more than $10,000 per violation, or by imprisonment for not more than 6 months per violation, or by both.

(23) Collected screenings, slurries, sludges, and other solids shall be disposed of in such a manner as to prevent entry of those wastes (or runoff from the wastes) into waters of the State. The proper authorization for such disposal shall be obtained from the Agency and is incorporated as part hereof by reference.

(24) In case of conflict between these standard conditions and any other condition(s) included in the permit, the other condition(s) shall govern.

(25) The permittee shall comply with, in addition to the requirements of the permit, all applicable provisions of 35 Ill. Adm. Code, Subtitle C, Subtitle D, Subtitle E, and all applicable orders of the Board.

(26) The provisions of this permit are severable, and if any provision of this permit, or the application of any provision of the permit is held invalid, the remaining provisions of this permit shall continue in full force and effect.

APPENDIX K
CERTIFICATION DOCUMENTS

Exhibit K-1
Certification Statement

Facility Certification Statement

Safety-Kleen Systems, Inc.
Pekin, Illinois
ILD093862811

I certify under penalty of law that this permit renewal application and all attachments were prepared under my direction or supervision in accordance with a system designed to assure that qualified personnel properly gather and evaluate the information submitted. Based on my inquiry of the person or persons who manage the system, or those persons directly responsible for gathering the information, the information submitted is, to the best of my knowledge and belief, true, accurate, and complete. I am aware that there are significant penalties for submitting false information, including the possibility of fine and imprisonment for knowing violations.

(Signature Authority)

Eric Rombach
Branch General Manager

5/1/03
(Date)

Exhibit K-2
Prior Conduct Certification Information