Revisions
1 December 9, 1981
2 August 28, 1984

DRIVER INSTRUCTIONS

FOR

EXCLUSIVE USE SHIPMENTS OF Ta-Cb ORE

1.0 PRE-SHIPMENT ACTIVITIES

1.1 Shipment must be loaded by Consignor.

1.2 Shipment must be braced to prevent shifting of load under conditions normally incident to transportation.

1.3 The vehicle must be placarded "RADIOACTIVE" on all four sides of the trailer until shipment is unloaded.

1.4 Insure that the emergency procedures are included with the shipping papers.

1.5 Check to insure that the closure on the rear door of the truck is properly sealed.

1.6 Review Emergency Information and Procedures section, attached.

2.0 DURING TRANSPORT

2 1 2.1 The time vehicle is left unattended shall be kept to a minimum while enroute to destination

2.2 The vehicle should not be parked on or within five feet of the public highway.

2.3 Check on parking and before start-up to insure rear door is properly sealed.

2.4 Do Not change out tractor before arrival at unloading point at Union Carbide Corporation facility in Uravan, Colorado.

2.5 Do Not change fifth wheel adjustment on tractor without notifying Shipper.

2.6 Do Not move or transfer packages within the van or between vans while enroute to destination without notifying shipper.

2.7 If the vehicle is involved in an accident or is required to make emergency braking which could shift the load, notify Shipper immediately.
(See Emergency Information and Procedures, attached).

UCCNHT0000213

3.0 AT DESTINATION (Union Carbide Corporation, Uravan, Colorado)

3.1 Give notification of arrival and receive guidance to unloading site.

3.2 Examine security seals and inspect outside of truck for damage or pilfering.

3.3 The shipment must be unloaded by Consignor from the transport vehicle in which originally loaded.

3.4 UCC or its representative will certify vehicles clean and available for Unrestricted Use and decontaminate if necessary.

4.0 PENALTY

4.1 Any deviation from these instructions or violations of State and Federal laws could result in carrier penalty.

Driver's Signature

Date

UCCNHT0000214

November 4, 1981
Revised November 23, 1981

EMERGENCY INFORMATION AND PROCEDURES

I. YOUR CARGO IS: Tantalum-Columbium Ore

THIS MATERIAL:

1. Is not explosive.
2. Will not burn.
3. Is a naturally radioactive material of low specific activity (LSA). It should not be inhaled, eaten, or allowed to get into an open wound.
4. Can be approached without danger of injury from external radiation.

II. EMERGENCY PROCEDURES

1. IMMEDIATELY NOTIFY:

   a. TRUCK DISPATCHER, LOCAL AND/OR STATE POLICE

   b. UCC MANAGER - NIAGARA OPERATIONS, TELEPHONE 716-278-3345 COLLECT, NIAGARA FALLS, NY BETWEEN 8:00 A.M. - 4:30 P.M. MST.

   c. UCC "HELP" SYSTEM, TELEPHONE 304-744-3487 AT ALL OTHER TIMES AND WHEN UCC MANAGER CANNOT BE REACHED. SERVICE IS AVAILABLE 24 HOURS A DAY.

   d. INFORMATION TO ABOVE SHOULD INCLUDE:

      1. Name, location and telephone number where caller can be reached
      2. Specific location of damaged container or vehicle
      3. Type of container
      4. Description of conditions involved at incident site
      5. Report of injuries and needs for medical assistance

2. Show these instructions as necessary to local authorities on the scene to obtain their help.

3. Collect information on the accident form, attached.

4. Make no other statements or phone calls except on instructions from Union Carbide management.

UCCNHT0000215

5. WHAT TO DO IF CONTAINERS ARE NOT SERIOUSLY DAMAGED

a. Keep unnecessary personnel away and caution others not to tamper with the containers. Use civil authorities to help you if necessary.

b. It is not necessary to have a specific distance between humans and the containers or truck, but for ease of controlling the situation, ask people to stay back 10-15 feet.

c. If closed containers are lying on the road, obtain assistance from whatever civil authority is available to move containers to the side of the road.

d. Assure local authorities that there is no danger in handling closed containers.

6. WHAT TO DO IF CONTAINERS ARE DAMAGED TOO SERIOUSLY TO BE MOVED

a. Caution people to stay away from the material. Keep them at a distance of at least 25 feet. Extreme distance is not necessary. Use civil authorities to help if necessary.

b. Assure local authorities that there is no danger from radiation but that people should avoid breathing any dust from the material.

c. Avoid trackage of material by people or vehicles. Obtain help from local civil authorities; if necessary, reroute traffic around the spill area.

d. Keep material from streets, gutters, sewers, etc., if possible.

e. If required, cover the spilled material. Undamaged containers can be moved to the side of the road.

f. Delay cleanup until arrival of personnel qualified in radiation monitoring and decontamination.

7. WHAT TO DO IF A FIRE INVOLVES THE VEHICLE

a. Isolate the vehicle from other people and property if possible. Use civil authorities for help.

b. Obtain fire fighting help from local group.

c. The material you are hauling <u>will not</u> burn.

UCCNHT0000216

EMERGENCY INFORMATION AND PROCEDURES

III. FIRST AID

Where medical assistance is indicated, the following steps shall be observed:

1. Call a physician.

2. Use standard first aid procedures.

3. Advise rescue personnel and physicians that the material is low specific activity radioactive material.

4. Specific information on the materials can be obtained by calling the numbers listed under "Section II, Emergency Procedures."

UCCNHT0000217

ACCIDENT REPORT

1.0 Date_____ Time_____

2.0 Person Calling_____ Capacity_____

From Telephone No. _____ Who Else Notified_____

3.0 Accident Location_____

_____

_____

4.0 Description of the Accident

Persons Injured_____ Names_____

_____

Treatment_____

Accident Description_____

_____

_____

_____

5.0 Was any Company material spilled from the vehicles?_____

_____

6.0 What action has been taken to contain the material?_____

_____

_____

7.0 Please report this information to one of the following:

Monday - Friday 8 00 a.m. - 4:30 p.m. MST

UCC MANAGER - NIAGARA OPERATIONS, TELEPHONE 716-278-3336 COLLECT, NIAGARA FALLS, NEW YORK

All Other Times

Contact UCC "Help" System, Telephone No. 304-744-3487. Calling this number will automatically contact the required personnel.

21

TECHNOLOGY DEPARTMENT

EXHAUSTIVE TRACE IMPURITY ANALYSIS OF NIOBIUM MATERIALS MADE BY THREE DIFFERENT PROCESSES

(Kemet P.O. No. 233-43144)

Contract NObsr-87478 Bureau of Ships
Department of the Navy

By

A. R. Gahler

Job Order No.
840-95379-P

June 7, 1963

METALS RESEARCH LABORATORIES
TECHNICAL REPORT NO. P-63-11

SECURITY COPY

UNION CARBIDE METALS COMPANY
DIVISION OF UNION CARBIDE CORPORATION

4625 ROYAL AVENUE, P.O. BOX 580
NIAGARA FALLS, NEW YORK

EXECUTIVE OFFICES 270 PARK AVENUE NEW YORK 17, N.Y.

UCCNHT0000219

EXHAUSTIVE TRACE IMPURITY ANALYSIS OF NIOBIUM MATERIALS MADE BY THREE DIFFERENT PROCESSES

BY

A. R. GAHLER

Kemet P. O. No. 233-43144

Contract NObsr-87478
for
Bureau of Ships
Department of the Navy
Washington, D. C.

June 7, 1963

UNION CARBIDE METALS COMPANY
Union Carbide Corporation
Technology Department
Niagara Falls, New York

UCCNHT0000220

TABLE OF CONTENTS

		Page
ABSTRACT		
LIST OF TABLES		
I.	INTRODUCTION	1
II.	PREPARATION OF METAL POWDERS	2
III.	COMPOSITION OF METAL POWDERS	3
IV.	ANALYTICAL METHOD DEVELOPMENT	5
	A. Experimental	7
	1. Separations	7
	a. Liquid-Liquid Extractions	7
	b. Liquid Anion Exchange	7
	c. Column Anion Exchange	7
	2. Analytical Methods	8
	a. Spectrophotometric Methods	8
	(1) Zirconium	8
	(2) Tin	8
	(3) Titanium	9
	(4) Vanadium	9
	b. Emission Spectrographic Methods	10
	(1) Aluminum	10
	(2) Silicon	10
	(3) Zirconium, Titanium, Vanadium, Tin	11
	(4) Lithium	12
V.	SUMMARY OF ANALYTICAL METHODS	12
VI.	CONCLUSIONS	16
VII.	REFERENCES	17
VIII.	CONTRIBUTING PERSONNEL	18

UCCNHT0000221

Page

APPENDIX I - Spectrophotometric Methods for Trace Elements in Niobium Metal

1. Chromium I-1
2. Cobalt I-4
3. Copper and Nickel I-7
4. Iron I-10
5. Manganese I-13
6. Molybdenum I-15
7. Tantalum (without ion exchange separation) I-17
8. Tantalum (after ion exchange separation) I-20
9. Tin I-23
10. Tungsten I-25
11. Zirconium and Titanium I-27

APPENDIX II - Emission Spectrographic Methods for Trace Elements in Niobium Metal

1. Aluminum II-1
2. Boron II-4
3. Calcium and Magnesium II-7
4. Aluminum, Lithium, Silicon, Tin, Titanium, Zirconium (Direct Method) II-9
5. Zirconium, Titanium, Tin, and Vanadium (After ion exchange separation) II-13

APPENDIX III - Miscellaneous Analytical Methods

1. Carbon III-1
2. Nitrogen (Distillation - Titrimetric Method) III-3
3. Nitrogen (Distillation - Spectrophotometric Method) III-5
4. Oxygen and Hydrogen III-8

UCCNHT0000222

EXHAUSTIVE TRACE IMPURITY ANALYSIS OF NIOBIUM MATERIALS MADE BY THREE DIFFERENT PROCESSES

ABSTRACT

Three lots of niobium metal by different manufacturing processes were reduced to powder, analyzed, and submitted to Kemet for evaluation for use in capacitors.

New analytical methods for the determination of less than 20 p.p.m. of titanium, aluminum, silicon, vanadium, tin, and zirconium in niobium were developed. These new methods were necessary in order to know precisely the compositions of the types of niobium tested in this contract.

LIST OF TABLES

		Page
TABLE I	- Oxidation Effect of Exposure of Niobium Powder to Air	2
TABLE II	- Comparison of Hydrogen, Oxygen and Nitrogen Content of Niobium Metal Before and After Hydriding	3
TABLE III	- Analyses of Niobium From Three Different Processes	4
TABLE IV	- Other Elements Sought but Not Detected In Any of the Niobium Materials	5
TABLE V	- Method and Lower Limit of Detectability for Analysis of Trace Elements in Niobium Metal	12

UCCNHT0000224

Job Order No 840-95379-P

Niagara Falls, New York
June 7, 1963

EXHAUSTIVE TRACE IMPURITY ANALYSIS OF NIOBIUM MATERIALS MADE BY THREE DIFFERENT PROCESSES

I. INTRODUCTION

In the latter part of 1962 a contract between Kemet Department, Linde Company, and the Navy was initiated to study and develop niobium capacitors. A subcontract to Union Carbide Metals Company, Metals Research Laboratory, was awarded to assist in extensive chemical analysis work and method development. It was anticipated that a co-ordinated electrical and composition evaluation of the niobium metal used for preparation of capacitors would help identify the impurities mainly responsible for degradation of dielectric niobium oxide films.

Three lots (50 pounds each) of niobium from three different manufacturing processes were received from Kemet:

Material 1 - Niobium granules prepared by hydrogen-reduction of pentachlorides.

Material 2 - Niobium granules (100 mesh by down) made by carbothermic reduction of the pentoxide.

Material 3 - Niobium sheet prepared by a proprietary process.

All three lots of niobium metal were sampled and analyzed for impurities in the as-received condition. Since Material 3 was in sheet form, the metal was sampled for the oxygen determination by shearing long strips and then small pieces from these strips. Drillings throughout the plates were collected for the other determinations

Following the initial analyses, a sizable portion of each material was returned to Kemet for the capacitor investigations. Since a particle size of less than 100 mesh was requested, it was necessary to hydride all these metals before size reduction by crushing and ball milling. The final metal powders were reanalyzed to determine impurity pickup before delivery to Kemet for evaluation for capacitors.

Several impurity elements were believed to have appreciable effect on the final capacitor and many of these elements were present in concentrations below 20 p.p.m. Thus, it was necessary to develop analytical methods of adequate sensitivity and reproducibility for the analysis. No published methods, for example, are available for titanium, zirconium, vanadium, silicon, or aluminum, as well as several other elements in the concentration range below 10 p.p.m. in niobium metal. A survey of 32 laboratories in 1961 by the Materials Advisory Board of the National Academy of Sciences, Refractory Metals Sheet Rolling Panel, indicated that analytical laboratories do not ordinarily determine trace elements below 50 p.p.m. in niobium.

This report describes the method of preparing the sample powders, composition of the powders, the analytical method development, and the analytical procedures used for the determinations.

UCCNHT0000225

II. PREPARATION OF METAL POWDERS

Kemet desired to study impurity effects on capacitors prepared from niobium powder (100 M x D); therefore, it was necessary to reduce the particle size of the three lots of metal.

A preliminary study of oxidation of powdered niobium metal in air was made before reducing large quantities of metal. Niobium metal (Material 2) was crushed to approximately 8 M x D in air. A portion of this material was analyzed for oxygen, the remaining material ground by hand in a dry box to 200 M x D and 325 M x D in a dry argon atmosphere. The two fractions were then analyzed for oxygen before exposure to air, then exposed to air for various periods of time and analyzed for oxygen. From the results shown in Table I, it can be inferred that no detectable increase in oxygen occurs upon exposure to air for 96 hours of 200 M x D niobium powder. A possible slight pickup of oxygen occurs with the 325 M x D powder.

TABLE I

OXIDATION EFFECT OF EXPOSURE OF NIOBIUM POWDER TO AIR*

Screen Size	Oxygen Content (%)
8 M x D (as-received)	0.30
200 M x D	
Before exposure	0 32
1 hr.	0.35
3 hr.	0.30
16 hr.	0.30
96 hr.	0.32
325 M x D	
Before exposure	0.29
1 hr.	0.34
3 hr.	0 34
16 hr.	0.34

*Reported values by the vacuum fusion method used are not more precise than ± 0.02% at the 0.3% level.

It has been claimed by members of the ASTM Task Force for the determination of oxygen in niobium since this test was made that the powder slowly oxidizes upon long standing.

This was tested by reanalyzing a sample of powder after it had been stored in a sample bottle for six months. The oxygen, which was originally reported at 0.15%, was found to be 0.19%. Thus, the powder does gain slightly in oxygen content when stored in the presence of air.

UCCNHT0000226

Niobium metal is not readily crushed in the usual type of jaw crushers or reduced to powder in a ball mill but the hydrided metal can be reduced in size fairly readily. The metal was hydrogenated by Union Carbide Stellite Company at 1472°F. in hydrogen, then cooled slowly at 50° per hour, maintaining a slight positive pressure of hydrogen. Very little oxygen was introduced by the hydriding step as shown in Table II.

TABLE II

COMPARISON OF HYDROGEN, OXYGEN, AND NITROGEN CONTENT OF NIOBIUM METAL BEFORE AND AFTER HYDRIDING

	Before Hydriding			After Hydriding		
Identification	% Oxygen	% Hydrogen	% Nitrogen	% Oxygen	% Hydrogen	% Nitrogen
Material 1	<0.01	0.007	0.0003	<0.01	0.64	<0.01
2	0.28	0.062	0.012	0.30	0.86	0.01
3	0 07	0.0012	0 0025	0.06	0.68	0.03

Small samples of the hydrided metal were then ball-milled in a mill lined with niobium and equipped with niobium grinding media. Materials 2 and 3 reduced in size fairly readily but Material 1, which consisted of round granules (beads) could not be reduced in size by ball milling These granules were cold worked by rolling them to tiny platelets. It then was possible to reach the 0.9% hydrogen level. The high-hydrogen metal could be ball milled.

The process of rolling Material 1, however, introduced large concentrations of impurities All the powdered samples were put through a Frantz Isodynamic Separator to remove tramp iron or other magnetic impurities. The Material 1 powder also was leached with hydrochloric acid to dissolve impurities but not all of the impurities were completely removed by this treatment Because of this higher level of impurity, granules finally were sent to Kemet for size reduction in their equipment. Analysis of this material is shown in Table III. Approximately 5 pounds of each material were prepared (100 M x D), sampled for analysis, and forwarded to Kemet for evaluation.

III. COMPOSITION OF METAL POWDERS

The three lots of niobium were sampled for analysis in the as-received state. A qualitative analysis by emission spectroscopy indicated the presence or absence of various elements and the relative concentrations of those present.

Those elements known to be present were then determined quantitatively by appropriate analytical techniques. However, the analysis on the as-received metals was merely used as an indication of the concentration level of the various impurities so that it could be determined what analytical method modification or development was required The results on the as-received metal samples are shown in Table III as well as the analysis of the final powders after hydriding and size reduction as they were submitted to Kemet.

UCCNHT0000227

TABLE III

ANALYSES OF NIOBIUM FROM THREE DIFFERENT PROCESSES

MATERIAL:		1 Hydrogen Reduced From Pentachloride		2 Carbon Reduced From Pentoxide		3 Proprietary Process		Method of Determination
CONDITION:		As Recd.	H + M 100 M x D*	As Recd.	H + M 100 M x D*	As Recd.	H + M 100 M x D*	
ELEMENT, ppm	C	30	80	70	110	80	225	(1)
	O	60	1300	2800	2700	650	1500	(2)
	H	71	7500	620	7800	12	6600	(2)
	N	3	170	120	237	25	43	(3)
	B	0.4	0.5	0.4	0.2	0.5	0.3	(4)
	Al	<40[a]	24	<40	<30	<40[a]	30	(4)
	Ca	<20	<30	20	<30	<20	<30	(4)
	Cr	13	19	15	12	11	11	(5)
	Co	<10	< 2	<10	< 2	<10	2	(5)
	Cu	6	6.5	6	7	47	44	(5)
	Fe	130	278	180[b]	67	110	187	(5)
	Li	--	< 1	--	< 1	--	5	(4)
	Mg	<20	<30	<20	<30	<20	<30	(4)
	Mn	< 5	18	< 5	< 5	< 5	< 5	(5)
	Mo	4	6.5	34	36	4	4	(5)
	Ni	15	15	8	14	21	22	(5)
	Si	<50	20	<50	17	<50	140	(4)
	Ta	730	7800	970	1100	320	3500	(5)
							3200	(9)
	Ti	<20[a]	--	25	--	<20[a]	--	(4)
		--	5	--	45	--	9	(7)
	V	--	0.5	--	4	--	< 0.5	(7)
	W	58	176	400	361	< 5	< 5	(5)
	Zr	3	--	0.8	--	1	--	(6)
		--	4	--	10	--	10	(7)
		--	4	--	9	--	15	(8)
	Sn	10	--	< 5	4	15	--	(5)
		--	10	--	4	--	8	(7)

NOTES: H = Hydrided
M = Milled
a = not detected
b = Average of 4 analyses ranging from 90 to 300 ppm, indicating tramp iron. Magnetic separation was made on the final powder.
* Nominal size.

Detection Methods: (1) Combustion conductometric; (2) Vacuum fusion; (3) Distillation-spectrophotometric; (4) Emission spectrographic; (5) Spectrophotometric; (6) Extraction-emission spectrographic; (7) Ion exchange-emission spectrographic; (8) Ion exchange-spectrophotometric; (9) X-ray fluorescence.

UCCNHT0000228

All the final powders contained higher concentrations of carbon, nitrogen, tantalum, and, of course, hydrogen intentionally from the hydriding processes. Oxygen increased in Materials 1 and 3; chromium, manganese, tungsten increased significantly in Material 1.

The iron content of Material 2 was considerably reduced by the Frantz Isodynamic Separator since it was known that the material had been reduced to 10 M x D in iron crushers. Materials 1 and 3 increased in iron content.

Apparent discrepancies in aluminum, calcium, silicon, titanium, and zirconium result because the original analysis was made with less sensitive methods than the improved analytical methods developed for analysis of the final powder.

Several elements were not detected. These are shown in Table IV along with the estimated detection sensitivity.

TABLE IV

OTHER ELEMENTS SOUGHT BUT NOT DETECTED IN ANY OF THE NIOBIUM MATERIALS

Element	Estimated Detection Sensitivity ppm
Sb	20
Be	10
Bi	20
Cd	10
Ce	500
Cs	10
Ga	3
Ge	5
Au	10
In	5
Pt	50
K	2
Pb	5
Os	50
Pd	10
Zn	100

IV. ANALYTICAL METHOD DEVELOPMENT

Very few analytical methods for the determination of traces of various elements in niobium metal in the concentration range interested (below 20 p.p.m.) have been published. Most published papers refer to procedures applicable for quantitatively determining elements in niobium down to approximately 0.01% (100 p.p.m.) Division R, A.S T.M., task force on chemical analysis of niobium metal has not been concerned with ultra high-purity niobium although this task force has

UCCNHT0000229

studied oxygen, hydrogen, nitrogen, carbon, iron, molybdenum, tungsten, zirconium, and tantalum in niobium. Most impurity specifications for niobium metal are above 100 p p.m.; therefore, the A.S.T.M. has not evaluated techniques for concentrations below 100 p.p.m.

The Technology Analytical Laboratory has had considerable experience for the past ten years in the determination of trace elements in niobium metal; therefore, most of the elements of interest could be analyzed by established company techniques.

From the analysis of the three lots of niobium as-received metal, it was concluded that the impurity levels of the elements were such that they fell into three categories: (1) existing UCM methods which were of suitable accuracy, precision and sensitivity--tantalum, tungsten, molybdenum, carbon, oxygen, hydrogen, nitrogen, boron, chromium, nickel, iron, and manganese; (2) existing UCM methods which were applicable with minor modifications such as change in sample size or modifications in the measurement of the colored system--cobalt, copper; (3) method development would be required to adequately measure the element at low levels of concentration (<50 p.p.m.)--titanium, zirconium, vanadium, tin, and lithium. Other elements such as calcium and magnesium were not considered of sufficient importance to require better analytical methods. Aluminum and silicon were felt to be of importance and method development was carried out on these two elements and will be described in the report for Task A, Activity 6, "Preparation of Highly Purified Niobium Powders."

Since it was quite evident that it would be impossible in most cases to determine titanium, zirconium, tin, or vanadium directly in niobium metal by emission spectroscopy, X-ray spectroscopy, and spectrophotometry without a preliminary chemical separation, several separation-concentration techniques were evaluated. The separations evaluated were patterned after some of those described in the literature which involved removal of the niobium by either liquid-liquid extraction (14), liquid ion exchange (5), or column ion exchange (9, 10, 12). The desired constituent could then be determined either with a spectrophotometer or emission spectrograph. Since multiple determinations on a sample can be made simultaneously with the emission spectrograph, it would be most desirable to develop this technique. Because of the increased sensitivity of many color-forming organic reagents and better specificity, it was concluded that spectrophotometric methods should also be investigated to substantiate the emission spectrographic methods. It was found, much beyond original expectations, that some spectrophotometric methods were equivalent and even slightly more sensitive than the emission spectrographic methods.

Although it is our customary practice to study recommended methods statistically for precision, this was not possible because of the cost and time required for a program of this nature.

UCCNHT0000230

A. Experimental

1. Separations

a. Liquid-Liquid Extraction

Since liquid-liquid extraction is rapid, this technique was examined first. The separation of niobium and tantalum into hexone from other elements such as zirconium has been described by Milner and Edwards (14).

Unfortunately varying amounts of niobium remained in the aqueous solution after extraction which interfered with the subsequent emission spectrographic or spectrophotometric determinations.

Essentially all the zirconium remained in the aqueous phase. A hexone extraction from 25 ml. of solution containing 8 ml. of H_2SO_4 and 10 ml. of HF gave recovery values of 95.4% for a sample to which 100 micrograms of inactive zirconium were added and 96 1% for a sample containing no added zirconium.

b. Liquid Anion Exchange

This relatively new technique (5) was also tested with radioisotope zirconium-95. Zirconium from 400 ml. of H_2SO_4 (4:96) was extracted with three 25-ml. portions of chloroform containing liquid anion exchange resins LA-1 and LA-2. About 10% of the zirconium-95 remained in the aqueous phase. Back-extraction of zirconium-95 from the chloroform solution containing the liquid anion exchangers with HCl (1:3) was quantitative.

From this data it was concluded that the recovery of zirconium would always be slightly low.

c. Column Anion Exchange

Separation of niobium and tantalum from zirconium, titanium, vanadium, iron, and many other elements by column ion exchange has been demonstrated in the literature (9, 10, 12) and has been commonly used in the Technology Analytical Laboratory. Several proposed A S T.M methods, such as determination of tantalum in niobium and tantalum, niobium, and titanium in ferrocolumbium, are based upon ion exchange separations. Thus, this method was tested for reliability in the separation of traces of zirconium, titanium, vanadium, and tin from large concentrations of niobium

The elution characteristics of a column 8 x 3/4-inch containing Dowex 1-X10 were tested with radioisotope zirconium-95. A sample containing the isotope in a HCl (1.3) - HF (1:4) solution placed on the column and then eluted with 150 ml. of the pure acid solution of the same concentration yielded 98.4% zirconium recovery. If the sample (and zirconium) was added to the column in a solution of slightly different acid concentrations [HCl (1:1)-HF (1·9)] and eluted with 150 ml. of the same acid solution, only 87.2% of the zirconium was recovered.

The coprecipitation of zirconium-95 as cupferrate with high purity tantalum after ion exchange separation from niobium was found to give greater than 98% recoveries. Thus, ion exchange combined with precipitation in the presence of a carrier (tantalum cupferrate) is quantitative and was used as basis for the analytical

UCCNHT0000231

procedure for the emission spectrographic determination. Occasionally, some niobium appeared in the eluate and, of course, would interfere with the determinations. This difficulty was attributed to traces of nitric acid remaining in the eluant containing the sample which apparently changed the adsorptive qualities of the column. The procedure was written so that traces of nitric acid are removed before the sample is passed through the column.

Since no standards were available to test the analytical method, a known amount (5 micrograms) of zirconium was added to a sample of niobium which had previously been reported to contain 1.9 p.p.m. of zirconium. By the spectrophotometric procedure 6.6 micrograms of zirconium or 95.7% recovery was obtained.

The radioactive zirconium used in these studies was carrier-free and was obtained from the Oak Ridge National Laboratories. It was separated from its decay daughter, niobium-95, by a thenoyl-trifluoroacetone extraction according to the method of F. L. Moore (15) and was used within two days of the separation, making decay corrections unnecessary.

2. Analytical Methods

The methods for tin, titanium, vanadium, and zirconium were developed for Task A, Activity 1, and aluminum and silicon for Task A, Activity 6 (Preparation of High-Purity Niobium Metal). The methods for aluminum and silicon, although developed primarily for another activity, are included in this report in order to keep all methods in one collection. Details of all the analytical methods for analysis of the niobium metal are found in Appendix I, II, and III.

a. Spectrophotometric Methods

(1) Zirconium

A colored system was needed which would have the required sensitivity for measurement of microgram quantities of zirconium and also be fairly specific. Several systems had been applied at the Technology Analytical Laboratory prior to this project. Chloranilic acid (8) and pyrocatechol violet (4) suffer from lack of sensitivity. Phenylfluorone (25) is sufficiently sensitive but not particularly specific. SPADNS, a new reagent for zirconium, is not sufficiently sensitive. Phenylfluorone was finally selected as the best reagent because of its sensitivity. Interfering elements would be removed by the preliminary ion-exchange separation.

The spectrophotometric procedure, as described in the Appendix I, was tested by adding 5 micrograms of zirconium to a sample of niobium metal assumed to contain 1.9 micrograms of zirconium by emission spectrographic analysis. A recovery of 104% of the 5 micrograms added resulted.

This method was frequently used when samples were analyzed for only zirconium because of its good sensitivity.

(2) Tin

A method for tin was not considered of great importance, but a method was developed based upon UCM experience in this type of analysis.

UCCNHT0000232

Several reagents have been proposed and applied for tin in steels and alloys. Among those most likely to be applicable are dithiol (16, 17), phenylfluorone (13), and pyrocatechol violet (21, 22). In our experience, the pyrocatechol violet color system is very useful because a time-consuming distillation is not required. The tin is separated from the niobium by a liquid-liquid extraction which is quite rapid.

The proposed procedure which appears in Appendix I was tested by addition of 10 micrograms of tin to a one-gram sample of niobium assumed to contain <0.0005% tin by the emission spectrographic procedure (4.2 p.p.m. by the spectrophotometric method). About 95% recovery of the tin occurred.

(3) Titanium

The Union Carbide Metals Company method (Method No. 41, 73-22-157) involving reaction of titanium with sulfosalicylic acid to form a colored system which can be measured spectrophotometrically is of insufficient sensitivity for determination of titanium below 100 p.p.m. Other colorimetric methods, such as the familiar reaction of titanium with hydrogen peroxide or Tiron (24), are insensitive or nonspecific.

It was decided that a preliminary separation of niobium was necessary and this was accomplished by an ion exchange technique. Titanium was then extracted as the thiocyanate complex by tri-n-octyl-phosphine oxide (TOPO) dissolved in cyclohexane. (For complete method see Appendix I). By this technique less than 1 p.p.m. of titanium can be readily determined in niobium metal.

Since no standards are available, results from the spectrophotometric method were compared with those from the emission spectrographic procedure. On one sample of niobium metal, the average of two results by the spectrophotometric method was 10 p.p.m. (11 and 9.5 p.p.m.) whereas titanium by the emission spectrograph method was 7 p.p.m.

A new method for the determination of titanium in the presence of niobium has been proposed (19) using diantipyrylmethane. The reagent was obtained and a preliminary evaluation made of its usefulness for analysis of titanium in niobium. Although this method is quite sensitive, it would be difficult to determine less than about 5 p.p.m. titanium in niobium directly. Niobium up to 0.25 g. enhances the color slightly, but larger concentrations effect the colored system appreciably. This colored reagent could be used instead of the thiocyanate-TOPO in cyclohexane system after ion exchange separation of the niobium. Efforts to extract the titanium-diantipyrylmethane system with organic solvents were not successful. Insufficient time was available for a complete evaluation of this very interesting system.

(4) Vanadium

The reaction of N-phenylbenzohydroxamic acid with vanadium (V) has been extremely useful for the determination of vanadium in steels and various alloys (20, 23). It was hoped to apply this spectrophotometric system to vanadium in niobium metal. However, it was found that the presence of citrate, tartrate, or other complexing reagents necessary for keeping the niobium in solution interfered with the color forming reagent. Therefore, it was not possible to determine vanadium

UCCNHT0000233

directly in niobium metal. A phosphotungstate method (for vanadium) was not readily applicable to this particular matrix (1).

After removal of niobium and tantalum by ion exchange, the vanadium can be determined easily by a spectrophotometric procedure. The N-phenylbenzohydroxamic acid procedure was tested by addition of 5 micrograms of vanadium to a solution containing 1 gram of powdered material to (100 M x D) which contained 4 p.p.m. of vanadium by the ion exchange emission spectrographic technique. The concentration of vanadium found in the blank (Material 2) was 4.5 p.p.m. and that found in the "spiked" sample was 9.5 p.p.m. This corresponds to a recovery of 5.0 p.p.m. of the vanadium or 100% of the amount added. Since the sensitivity is not as good as the emission spectrographic method, the spectrophotometric procedure was used mostly as another method for verification and support of results obtained by the spectrograph.

b. Emission Spectrographic Methods

(1) Aluminum

Spectrophotometric methods for trace concentrations of aluminum (<50 p.p.m.) are unreliable; therefore, no development work with this technique was considered. Existing emission spectrographic methods were not sensitive below 30 p.p.m.; therefore, modification of the existing method was required.

It was necessary to prepare a set of standards for the trace aluminum determination. To make these standards a source of niobium oxide whose aluminum content was less than the samples to be analyzed was required. Niobium oxide prepared by an ion exchange technique was tried, but the aluminum content was not significantly less than that of the three samples of niobium metal. A systematic search of two to three dozen samples of competitive brands and miscellaneous experimental lots resulted in the selection of a batch of oxide with requisite purity for the preparation of the standards.

In the initial search for Nb_2O_5 of low aluminum content, it soon became apparent that the DC arc technique for higher aluminum contents was unsuitable for trace aluminum analyses both in regard to sensitivity and precision. A highly sensitive and valuable double cap mix technique and AC arc excitation was therefore devised and utilized in both the search for low-aluminum Nb_2O_5 and in quantitative analytical work on the special samples.

(2) Silicon

Spectrophotometric methods are unreliable for silicon in niobium metal below 100 p.p.m. Again, the emission spectrographic method required modification for silicon in the range of interest (less than 10 p.p.m.). The trace silicon determination required the preparation of special standards. An unsuccessful attempt was made to purify Nb_2O_5 by treatment with hydrofluoric and sulfuric acids and evaporation to dryness. Similar to the case of the trace aluminum determination the problem of acquiring oxide of requisite purity was solved by testing many miscellaneous samples of Nb_2O_5 until one of requisite purity was found.

UCCNHT0000234

Greater care is necessary in the preparation of p.p.m. silicon standards than in the case for other elements. The boron carbide mortar used in grinding and mixing the oxide will contribute silicon unless care is used. Hand grinding with an acetone slurry was effective in minimizing the contamination from this source. The 1% GeO_2, 0.25% $PdCl_2$ graphite-oxide mix used in the regular method was not used in the trace silicon method. This is because a small amount of silicon contamination results from the preparation of this mix probably from the thorough grinding and mixing operation. Because the silicon is almost completely removed from the graphite-oxide mix during the period of exposure (total energy method) and a set of standards are included on each plate, the precision of the analysis is still adequate (about $\pm$ 10%).

The accuracy of the method cannot readily be determined. However, one of high standards was analyzed using the GeO_2 mix with the high range method. The result plotted well on the high range curve indicating that a continuity exists between the two methods.

(3) Zirconium, Titanium, Vanadium, and Tin

Preliminary analysis of the niobium metals indicated that the concentrations of zirconium, titanium, vanadium and tin were too low for determination of these traces directly on the oxide of the metal. Spectrographic standards and working curves prepared by dry-grinding various elements in both a niobium and tantalum oxide matrix were available in the laboratory. These had been prepared in prior years and were based on more than one set of dry-ground standards each containing zirconium, vanadium, titanium, and tin together with different combinations of other elements. Analysis with these curves had demonstrated that greater sensitivity and better precision for the zirconium determination was possible when measurement was made in a Ta_2O_5 matrix rather than a Nb_2O_5 matrix. Thus, when separation techniques were considered, it was decided to use tantalum as a carrier and measure the elements in a Ta_2O_5 matrix.

To check the accuracy of the dry-ground standards, additional standards were prepared for titanium, vanadium, and zirconium by the addition of known concentrations of these elements to a solution containing a known amount of tantalum and then precipitating with cupferron, filtration, and ignition to the oxide In every case these new standards plotted in close agreement with the data from the existing working curves. The existing working curves for tin were used without the preparation of check standards because of insufficient time and urgency to investigate this method completely.

The tantalum used as a collector must be of high purity with respect to these elements as well as niobium. If none is available, it may be prepared by ion-exchange separation of all these elements from the tantalum and then selective elution of the tantalum and collection of this fraction in a plastic bottle for future use as a collector.

UCCNHT0000235

(4) Lithium

The qualitative examination showed that only one vendor's niobium metal contained lithium. A single set of standards was prepared by dissolving lithium-free metal with hydrofluoric acid, adding appropriate amounts of a lithium standard solution and evaporating to dryness in the presence of sulfuric acid. The samples were prepared in a similar manner. A sensitive spark solution method was tried as an alternative check method but did not have sufficient sensitivity.

For details of the methods see Appendix II.

V. SUMMARY OF ANALYTICAL METHODS

Details of the analytical methods for the analysis of niobium metal for this project and Task A Activity 6 are given in Appendix I, II, and III for the spectrophotometric, emission spectrographic, and miscellaneous methods. A short description of each method and the estimated lower limit of detectability appears in Table V.

TABLE V

METHOD AND LOWER LIMIT OF DETECTABILITY FOR ANALYSIS OF TRACE ELEMENTS IN NIOBIUM METAL

Element	Procedure	Lower Limit of Detectability (ppm)	Description of the Method
C	Combustion-Conductometric	5 to 10	Combustion of sample in oxygen at 1400°C. collection of CO_2 in strontium hydroxide solution, and conductometric determination of the CO_2 concentration.
O	Vacuum Fusion	5 to 10	Fusion of the sample in a platinum bath, collection and measurement of the CO_2.
H	Vacuum Fusion	1	Fusion of the sample in a platinum bath, collection and measurement of the hydrogen
N	a. Distillation-titrimetric b. Distillation-spectrophotometric	50 1	The metal is dissolved in a medium for conversion of nitrides to the ammonium salt, distillation of ammonia, and titrimetric or spectrophotometric determination of the ammonia.
B	Emission Spectrographic	0.2	The metal is ignited to the oxide, mixed with gallium oxide, and the mixture excited using the carrier distillation technique.
Al	Emission Spectrographic	3	The metal is ignited to the oxide, mixed with graphite and determined by using an AC arc, double cap mix technique.

UCCNHT0000236

Element	Procedure	Lower Limit of Detectability (ppm)	Description of the Method
Ca	Emission Spectrographic	30	Nb_2O_5 prepared from the metal is mixed with graphite and excited with a high-voltage AC spark and a cap mix technique.
Cr	Spectrophotometric	1	After dissolution, the niobium is separated from the chromium by an extraction of niobium cupferrate with chloroform. The chromium is determined spectrophotometrically in the aqueous phase with diphenyl carbazide.
Co	Spectrophotometric	5	After dissolution, the niobium is separated from the cobalt by an extraction of niobium cupferrate with chloroform. The cobalt is determined spectrophotometricall in the aqueous phase with tetraphenylarsonium chloride.
Cu	Spectrophotometric	1	After dissolution of the metal, the copper is reduced with hydroxylamine hydrochloride, the complex with neocuproine extracted with chloroform and measured spectrophotometrically (2, 18).
Fe	Spectrophotometric	1	After dissolution of the metal, the iron is reduced, the complex with bathophenanthroline extracted with chloroform, and the colored solution measured spectrophotometrically (3).
Li	Emission Spectrographic	3	The metal is dissolved in acids, acids volatilized, residue mixed with graphite and excited in a direct-current arc.
Mg	Emission Spectrographic	30	Nb_2O_5 prepared from the metal is mixed with graphite and excited with a high-voltage AC spark and a cap mix technique.
Mn	Spectrophotometric	1	After dissolution of the metal, the niobium cupferrate is extracted with chloroform, and the manganese oxidized with KIO_4 to permanganate which is measured spectrophotometrically.
Mo	Spectrophotometric	1	After dissolution of the metal, the molybdenum thiocyanate complex is extracted with butyl acetate and the color measured spectrophotometrically.

UCCNHT0000237

Element	Procedure	Lower Limit of Detectability (ppm)	Description of the Method
Ni	Spectrophotometric	1	The metal is dissolved, copper removed with neocuproine, and the nickel dimethyl glyoxime complex extracted with chloroform nickel back extracted in an acid solution and the nickel determination spectrophotometrically with dimethylglyoxime.
Si	Emission Spectrographic	2	The metal is converted to oxide, mixed with graphite and the sample excited in a DC arc.
Ta	a. Spectrophotometric	100	After dissolution of the metal and removal of traces of boron, the tantalum is extracted from an oxalate solution as the methylviolet-fluoride complex with benzene (7).
	b. Spectrophotometric	5	An HF-HCl solution of the metal is passed through an anion exchange column. After eluting the column with a special solution to remove most of the niobium, the ion exchange material is ignited, the residue containing the tantalum fused, and the melt dissolved in ammonium oxalate solution. The tantalum is determined spectrophotometrically as the methyl violet fluoride complex in benzene.
Sn	a. Spectrophotometric	3	The metal is dissolved, tin extracted with (2-ethylhexyl) phosphine oxide into cyclohexane, and the color developed with pyrocatechol violet.
	b. Emission Spectrographic	0.5	See titanium (emission spectrographic).
Ti	a. Emission Spectrographic	0.5	An HF-HCl solution of the metal is passed through an anion exchange column to separate the titanium from niobium The titanium is precipitated as cupferrate with tantalum as carrier, and ignited to the oxide. The oxide is mixed with graphite, GeO_2, and $PdCl_2$ and excited in a DC arc. The same procedure is applicable for V, Sn, and Zr.
	b. Spectrophotometric	0.5	An HF-HCl solution of the metal is passed through an anion exchange column to separate the titanium from niobium. The titanium is determined spectrophotometrically in the eluate by extraction of the thiocyanate complex by TOPO in cyclohexane.

UCCNHT0000238

Element	Procedure	Lower Limit of Detectability (ppm)	Description of the Method
V	Emission Spectrographic	0.5	See Ti (emission spectrographic)
Zr	a. Emission Spectrographic	0.5	See Ti (emission spectrographic)
	b. Spectrophotometric	0.5	An HF-HCl solution of the metal is passed through an anion exchange column to separate the zirconium from the niobium. The zirconium is determined spectrophotometrically in the eluate with phenylfluorone.
W	Spectrophotometric	1	After dissolution of the metal and removal of any Mo present with dithiol, the W is reduced with Ti (III) and the complex with dithiol extracted with amylacetate and measured spectrophotometrically (7, 11).

UCCNHT0000239

VI. CONCLUSIONS

1. Three types of niobium metal, made by different manufacturing processes, were reduced to powder and their chemical compositions determined in detail. Analyses were made for trace elements that are suspected to influence capacitor properties. The compositions are reported in Table III.

2. New analytical methods were developed for the determination of less than 20 p.p.m. of the elements titanium, aluminum, silicon, vanadium, tin, and zirconium. These methods are given in detail in the Appendices of the report.

UCCNHT0000240

VII. REFERENCES

1. Cooper, M. D. and Winter, P. K., Anal. Chem., 21, 605 (1949).
2. Gahler, A. R., Anal. Chem. 26, 577 (1954).
3. Gahler, A. R., Hamner, R. M., and Shubert, R. C., Anal. Chem. 33, 1937 (1961).
4. Green, H. J., British Cast Iron Res. Assn., 10, 586 (1962).
5. Green, H., Metallurgia, 65, 305 (1962).
6. Greenberg, P., Anal. Chem. 29, 896 (1957).
7. Greenberg, P. and Smart, A., Anachem Conference, Detroit, Michigan, Oct. 1960.
8. Hahn, R. B. and Johnson, J. L., Anal. Chem. 29, 902 (1957).
9. Hague, J. L., Brown, E. D., and Bright, H. A., J. of Research, Nat'l. Bur. Standards 53, 261 (1954).
10. Hague, J. L. and Machlan, L. A., J. of Res., NBS, 62, 53 (1959).
11. Hobart, E. W. and Hurley, E. P., Anal. Chim. Acta., 27, 144 (1962).
12. Kallmann, S., Oberthin, H., and Liu, R., Anal. Chem. 34, 609 (1962).
13. Luke, C. L., Anal. Chem. 31, 1803 (1959).
14. Milner, G. W. C. and Edwards, J. W., Anal. Chim. Acta. 13, 230 (1955).
15. Moore, F L., Anal. Chem. 28, 997 (1956).
16. Onishi, H. and Sandell, E. B., Anal. Chim. Acta 14, 153 (1956).
17. Ovenston, T. C., Analyst 80, 566 (1955).
18. Penner, E. M. and Inman, W. R., Talanta 10, 407 (1963).
19. Polyak, L. Ya., Z. Anal. Khim (USSR), 17, 206 (1962) English Translation.
20. Priyadarshini, U. and Tandon, S. C., Anal. Chem. 33, 435 (1961).
21. Ross and White, Anal. Chem. 33, 421 (1961).
22. Ross and White, ibid., 33, 424 (1961).
23. Ryan, D E., Analyst 85, 569 (1960).
24. Yoe, J H. and Armstrong, A. R., Anal. Chem., 19, 100 (1947).
25. Zharovskii, F. G. and Pilipenko, A. T., Zarodskaya Laboratoria, 23, 1407 (1957). See also Analytical Abstracts 5, 294P (1958).

UCCNHT0000241

VIII. CONTRIBUTING PERSONNEL

The following personnel contributed to the work reported:

C. M. Brown)	Refractory Metals Department
H. J. Brown)	
W. P. Evans)	Technology Analytical Laboratory
A. R. Gahler)	
P. Greenberg)	
R. M. Hamner)	
F. S. Jones)	
J. F. Langhau)	
R. A. Lannoye)	

A. R. Gahler

A. R. Gahler

ARG:djh

UCCNHT0000242

APPENDICES I - III

UCCNHT0000243

APPENDIX I - SPECTROPHOTOMETRIC METHODS

DETERMINATION OF CHROMIUM IN NIOBIUM METAL (PHOTOMETRIC WITH DIPHENYLCARBAZIDE)

SCOPE

This procedure is designed for the determination of 1 to 100 p.p.m. of chromium in niobium metal.

PRINCIPLE OF METHOD

The metal is dissolved in HF and HNO_3, and the niobium cupferrate extracted with chloroform. After evaporation, the chromium is oxidized with ammonium persulfate, $(NH_4)_2S_2O_8$, in the presence of $AgNO_3$ and determined photometrically as the diphenylcarbazide complex.

CONCENTRATION RANGE

The range of the method at 540 mμ using 5-cm. cells is 0 to 20 micrograms of chromium per 100 ml. The range can be extended to determine up to 100 micrograms (0.1 mg.) of chromium per 100 ml. by preparing a suitable absorbance-concentration curve using 1-cm. cells. The colored system follows Beer's law but is not stable, so the absorbance should be measured as described in the procedure.

INTERFERENCES

There are no interferences from other metal ions in the concentrations normally found in niobium metal. Up to one mg. of iron can be tolerated without interference. A slight turbidity due to niobium may be removed by centrifuging the colored solution just before photometric measurement.

SPECIAL REAGENTS

3N H_2SO_4 + 1.5N H_3PO_4 Mixture - Mix 166 ml. of H_2SO_4 (1:1) and 100 ml. of 85% H_3PO_4, and dilute to one liter. Heat, add 0.01N $KMnO_4$ solution dropwise to the hot acid until a faint color appears. Store in a glass stoppered bottle.

Sodium Hydroxide (100 g./liter) - Dissolve 50 g. of reagent grade pellets in 500 ml. of water. Store in a polyethylene bottle.

Silver Nitrate (0.5 g./liter) - Dissolve 50 mg. of the salt in 100 ml. of water. Store in a brown glass dropping bottle.

Potassium Permanganate (2 g./liter) - Dissolve 0.2 g. of the salt in 100 ml. of water. Store in a brown glass dropping bottle.

Diphenylcarbazide (0.2 g./100 ml.) - Dissolve 0.2 g. of the reagent in 100 ml. of 95% ethanol. Prepare fresh daily and store in a refrigerator.

Standard Chromium Solution - Dissolve 0.2829 g. of N.B.S. potassium dichromate in water and dilute to one liter. One ml. = 0.1 mg. of chromium. Dilute a 10-ml. aliquot of this stock solution to 500 ml. One ml. = 0.002 mg. (2 micrograms) of chromium.

UCCNHT0000244

SPECIAL APPARATUS

A spectrophotometer capable of utilizing 5-cm. cells.

SPECIAL PRECAUTIONS

All the glassware used in this determination must be thoroughly cleaned. The beakers should be boiled with nitric and perchloric acids, fumed strongly with perchloric acid, and thoroughly rinsed with distilled water. It is advisable to set aside glassware to be used exclusively for this determination. To obtain a low blank, it may be necessary to pass the distilled water through an ion-exchange column and store in a Pyrex bottle.

PREPARATION OF CALIBRATION GRAPH

Pipet 0 (blank), 1-, 2-, 5-, 7-, and 10-ml. aliquots of the standard chromium solution (one ml. = 2 micrograms of chromium) into 100-ml. Pyrex volumetric flasks. Dilute to about 50 ml. Add 10 ml. of the H_2SO_4-H_3PO_4 acid mixture. Add 3 drops of the $AgNO_3$ solution, one drop of $KMnO_4$ solution, and 0.2 g. of $(NH_4)_2S_2O_8$. Wash down the neck of the flask and add a Hengar (Al_2O_3) boiling chip. Boil gently for 30 minutes to assure complete oxidation of the chromium and decomposition of the excess ammonium persulfate. The faint pink color of the permanganate should remain throughout the entire boiling period (Note 1). Cool to room temperature, add from a pipet 10 ml. of the diphenylcarbazide reagent, dilute to the mark with water, and mix. Measure the absorbance within 10 minutes on a spectrophotometer at 540 mμ in 5-cm. cells using the blank as reference solution. Plot absorbance versus micrograms of chromium per 100 ml.

PROCEDURE

Carry a blank through the entire procedure.

Dissolve 1.000 g. of niobium metal in a 100-ml. platinum dish fitted with a platinum cover, using 5 ml. of HF and dropwise addition of HNO_3. Add 10 ml. of H_2SO_4 and evaporate to light fumes of H_2SO_4. Cool and add HF dropwise to obtain a clear solution. Transfer the sample to a polyethylene beaker containing 50 ml. of HF (2:98) solution. Rinse the platinum dish with HF (2:98) solution and add to the main solution. Chill the sample solution, the cupferron solution (saturated solution in water), and the chloroform to between 0 and 5°C. (Note 2).

Transfer the sample to a chilled, 250-ml. separatory funnel containing 50 ml. of the chilled cupferron suspension. Mix, add 100 ml. of the chilled chloroform and shake one minute. Withdraw the organic layer and discard. Add cupferron, about 5 ml. at a time until precipitation is complete. Repeat the extraction with 30 to 40 ml. of chloroform until the lower layer is colorless. Rinse the funnel stem with chloroform, then with water. Add 50 ml. of isopropyl ether and shake one minute.

Withdraw the aqueous layer containing the chromium to a 250-ml. Teflon beaker and evaporate to 50 ml. or less. Add 20 ml. of HCl and 10 ml. of HNO_3, cover partially, and evaporate to remove ammonium salts and HF (Note 3). Cool, transfer to a 150-ml. Pyrex beaker, and evaporate to about one ml. of H_2SO_4. Dilute to 25 ml. and neutralize with NaOH solution (pH paper). Add 10 ml. of H_2SO_4-H_3PO_4 acid mixture

UCCNHT0000245

DETERMINATION OF COBALT IN NIOBIUM METAL (PHOTOMETRIC WITH TETRAPHENYLARSONIUM CHLORIDE AND THIOCYANATE)

SCOPE

This method is designed for the determination of 5 to 100 p.p.m. of cobalt in niobium metal.

PRINCIPLE OF METHOD

The metal is dissolved in HF and HNO_3, fumed in H_2SO_4, and the niobium cupferrate extracted with chloroform. After evaporation of the aqueous phase, thiosulfate, thiocyanate, and fluoride are added to the sample. Tetraphenylarsonium chloride is added to form the blue tetraphenylarsonium cobaltothiocyanate complex which is extracted with chloroform and measured at 620 mμ.

CONCENTRATION RANGE

The range using 5-cm. cells is from 5 to 100 micrograms of cobalt in 25 ml. of chloroform. The system follows Beer's law and is stable for at least 24 hours. The range can be extended to determine up to 0.02% cobalt by preparing an absorbance-concentration graph using 1-cm. cells.

INTERFERENCES

There are no interferences from other metal ions in the concentrations normally found in niobium metal.

A slight turbidity due to niobium may be removed by centrifuging the colored solution just before photometric measurement.

SPECIAL REAGENTS

Tetraphenylarsonium Chloride - Dissolve 2.28 g. of the salt in 100 ml. of water. (Obtainable from A. D. McKay, Inc., or Eastern Chemicals Company.)

Sodium Thiosulfate - Dissolve 10 g. of the salt in water and dilute to 100 ml. Prepare fresh for each determination.

Ammonium Thiocyanate - Dissolve 50 g. in water and dilute to 100 ml.

Standard Cobalt Solutions

a. Stock Solution - Dissolve 1.00 g. of cobalt metal in 30 ml. of HNO_3 (1:1). Add 10 ml. of sulfuric acid and take to fumes to remove the nitric acid. Cool, dilute to about 100 ml., heat to dissolve the salts, cool, and dilute to one liter with water.

b. Dilute Standard Cobalt Solution - Transfer 10 ml. of the stock solution to a liter volumetric flask and dilute to volume (one ml. of solution equals 0.01 mg. of cobalt).

UCCNHT0000246

PREPARATION OF CALIBRATION GRAPH

Transfer 0 (blank), 1-, 2-, 5-, 7-, and 10-ml. aliquots of the dilute standard cobalt solution (one ml. equals 10 micrograms of cobalt) to 150-ml. beakers. Dilute to 25 ml. and adjust the acidity by adding NH_4OH until just alkaline, then dropwise HCl until just acid (pH paper).

Add successively with stirring 2 to 3 drops of sodium thiosulfate solution, 5 ml. of ammonium thiocyanate solution, and 0.05 g. of ammonium fluoride. Transfer to a 125-ml. separatory funnel using a small amount of water. Add 10 drops of tetraphenylarsonium chloride solution and mix. Extract with 10 ml. of chloroform by shaking one minute. Withdraw the chloroform layer through a loosely fitted cotton plug in the funnel stem into a 25-ml. volumetric flask. Repeat the extraction twice more using 5-ml. portions of chloroform and 2 drops of tetraphenylarsonium chloride. The last extract should be colorless. Dilute to volume with chloroform. Measure the absorbance at 620 mμ in 5-cm. cells using the blank as reference solution. Plot absorbance versus micrograms of cobalt per 25 ml.

PROCEDURE

Carry a blank through the entire procedure.

Dissolve 1.000 g. of niobium metal in a 100-ml. platinum dish fitted with a platinum cover, using 5 ml. of HF and dropwise addition of HNO_3. Add 10 ml. of H_2SO_4 and evaporate to light fumes of H_2SO_4. Cool and add HF dropwise to obtain a clear solution. Transfer the sample to a polyethylene beaker containing 50 ml. of HF (2:98) solution. Rinse the platinum dish with HF (2·98) solution and add to the main solution. Chill the sample solution, the cupferron solution (saturated solution in water), and the chloroform to between 0 and 5°C. (Note 1).

Transfer the sample to a chilled, 250-ml. separatory funnel containing 50 ml. of the chilled cupferron suspension. Mix, add 100 ml. of the chilled chloroform, and shake one minute. Withdraw the organic layer and discard. Add cupferron, about 5 ml. at a time until precipitation is complete. Repeat the extraction with 30 to 40 ml. of chloroform until the lower layer is colorless. Rinse the funnel stem with chloroform, then with water. Add 50 ml. of isopropyl ether and shake one minute.

Withdraw the aqueous layer containing the cobalt to a 250-ml. Teflon beaker and evaporate to 50 ml. or less. Add 20 ml. of HCl and 10 ml. of HNO_3, cover partially, and evaporate to remove ammonium salts and HF (Note 2). Cool, transfer to a 150-ml. Pyrex beaker, and fume to about one ml. of H_2SO_4 or less. Dilute to 25 ml. and neutralize with NH_4OH, then add HCl dropwise until just acid (pH paper). Continue as described in Preparation of Calibration Graph, starting with "Add successively with stirring 2 to 3 drops...." (Note 3).

NOTES

1. If the temperature of the solution is not less than 5°C., the niobium cupferrate is only slightly soluble. The cupferron solution should be freshly prepared, nearly colorless, and should contain some undissolved reagent.

UCCNHT0000247

2. If the solution turns black, add HNO_3 dropwise and repeat the fuming. Continue adding HNO_3 and evaporating to fumes until all organic matter is destroyed.

3. If the depth of color is beyond the range of 5-cm. cells, measure the absorbance in 1-cm. cells and refer to the proper calibration graph.

UCCNHT0000248

DETERMINATION OF COPPER AND NICKEL IN NIOBIUM METAL (PHOTOMETRIC WITH NEOCUPROINE AND DIMETHYLGLYOXIME)

SCOPE

This method is suitable for the determination of copper and nickel in niobium metal within the range of 1 to 100 p.p.m.

PRINCIPLE OF METHOD

After dissolution of the sample in HF and HNO_3 and removal of excess HF with H_2SO_4, the niobium is complexed with ammonium citrate. The pH is adjusted to 5 to 7 with NH_4OH, and copper is extracted as the neocuproine complex with chloroform and determined spectrophotometrically. The aqueous phase from the copper separation is adjusted to pH 9 and nickel is extracted as the dimethylglyoxime complex with chloroform. After back-extracting with HCl, nickel is determined spectrophotometrically with dimethylglyoxime.

CONCENTRATION RANGE

The colored systems follow Beer's law in the range from 1 to 40 micrograms of copper and 1 to 20 micrograms of nickel in 25-ml. volume using 5-cm. cells. The range may be extended by using 1-cm. cells. The sensitivity for copper can be doubled by substitution of the more sensitive reagent, bathocuproine, for neocuproine (Note 1).

INTERFERENCES

There are no interferences in this procedure as written. If nickel is to be determined but not copper, then the copper must be removed before the nickel dimethylglyoxime extraction. If a high blank is obtained, it may be necessary to use redistilled or ion-exchange water.

SPECIAL REAGENTS

Ammonium Citrate - Dissolve 400 g. of diammonium citrate in 700 ml. of water. Adjust to a pH of 9 to 9.5 with ammonium hydroxide and transfer to a one-liter separatory funnel. Add 10 ml. of dimethylglyoxime solution and make three extractions with 30-ml. portions of chloroform. Filter and dilute to one liter.

Hydrochloric Acid, 0.5N - Dilute 40 ml. of reagent grade HCl to one liter.

Hydroxylamine Hydrochloride Solution - Dissolve 50 g. of $NH_2OH \cdot HCl$ in 500 ml. of water.

Neocuproine Solution - Dissolve 0.5 g. of neocuproine (2,9-dimethyl-1,10-phenanthroline, G. F. Smith Chemical Company) in 500 ml. of 95% ethanol.

Dimethylglyoxime - Dissolve one gram of recrystallized dimethylglyoxime in 500 ml. of 95% ethanol. To recrystallize the dimethylglyoxime, dissolve the dimethylglyoxime in absolute ethanol. Warm gently until the dimethylglyoxime is in solution. Chill until the dimethylglyoxime recrystallizes. Filter on a fritted crucible and allow to air-dry. If the colored system is not stable for at least one-half hour, repurify the reagent.

UCCNHT0000249

Standard Copper Solution - Dissolve 0.200 g. of high-purity copper wire in 5 ml. of HNO_3 (1:3). Add 10 ml. of H_2SO_4 (1:1) and 5 ml. of formic acid, and evaporate to fumes. Cool and dilute to one liter. Dilute 10.0 ml. of this stock solution to one liter (one ml. = 2 micrograms of copper).

Standard Nickel Solution - Dissolve 0.200 g. of high-purity nickel metal in 5 ml. of HNO_3 (1:1). Add 10 ml. of H_2SO_4 (1:1) and 5 ml. of formic acid, and evaporate to fumes. Cool and dilute to one liter. Dilute 10.0 ml. of this stock solution to one liter (one ml. = 2 micrograms of nickel).

PREPARATION OF COPPER ABSORBANCE-CONCENTRATION GRAPH

Transfer 0 (blank), 1-, 2-, 5-, 7-, and 10-ml. aliquots of the diluted copper stock solution to 125-ml. separatory funnels. Add 10 ml. of hydroxylamine-hydrochloride solution, 5 ml. of ammonium citrate solution, and dilute to 25 ml. Adjust the pH to 6 with NH_4OH (pH paper). Add 5 ml. of neocuproine, mix, and add 10 ml. of chloroform. Shake one minute and withdraw the organic phase into a 25-ml. volumetric flask containing 2 ml. of 95% ethanol. Make another extraction with 5 ml. of chloroform. Dilute to the mark with ethanol and mix. Measure the absorbance at 476 mμ using 5-cm. cells and the reagent blank as reference solution. Plot absorbance versus micrograms of copper per 25 ml.

PREPARATION OF NICKEL ABSORBANCE-CONCENTRATION GRAPH

Transfer 0 (blank), 1-, 2-, 5-, 7-, and 10-ml. aliquots of the diluted nickel stock solution to 25-ml. volumetric flasks. Add 2 drops of HCl, 3 drops of bromine water, and dilute to 15 ml. Add NH_4OH dropwise until the bromine color is discharged and then 4 drops of excess. Add 5 ml. of dimethylglyoxime solution immediately, dilute to the mark with water, and mix. After standing 5 minutes, measure the absorbance at 450 mμ using 5-cm. cells and the reagent blank as reference solution. Plot absorbance versus micrograms of nickel per 25 ml.

PROCEDURE

I. DISSOLUTION OF NIOBIUM METAL

Transfer one gram of sample to a 100-ml. platinum dish or 250-ml. Teflon beaker fitted with a cover. Carry a blank through the procedure. Add 10 ml. of HF and a few drops of HNO_3 to complete the dissolution. Add more HNO_3 and warm, if necessary. Add 10 ml. of H_2SO_4, 2 ml. of formic acid, mix, and evaporate at low heat until H_2SO_4 fumes begin to evolve (Note 2). Cool to room temperature, add 10 ml. of ammonium citrate solution, stir and transfer to a 250-ml. beaker. Police the platinum dish and wash into the beaker. Adjust the pH of the sample solution to 6 with NH_4OH (pH paper), dilute to 60 ml., and boil to obtain a clear solution. Determine the copper and nickel as described under Sections II and III. If nickel is to be determined and not copper, the separation of copper must be made since copper interferes in the nickel determination.

II. DETERMINATION OF COPPER

Transfer the sample solution containing not more than 50 micrograms of copper or 20 micrograms of nickel to a 125-ml. separatory funnel (Note 3). Add 10 ml. of hydroxylamine-hydrochloride solution, mix, and adjust the pH between pH 5-7.

UCCNHT0000250

Add 5 ml. of neocuproine solution, mix, and add 10 ml. of chloroform. Shake one minute and allow to separate. Withdraw the organic layer into a 25-ml. volumetric flask containing 2 ml. of ethanol. Extract again with 5 ml. of chloroform to ensure complete removal of copper and reagent. Dilute to the mark with ethanol and mix. Measure the absorbance at 476 mμ using 5-cm. cells and the reagent blank as reference solution. Determine the concentration of copper from the previously established calibration graph.

III. DETERMINATION OF NICKEL

Adjust the aqueous phase in the separatory funnel from the copper separation to pH 9 by dropwise addition of NH_4OH. Add 5 ml. of dimethylglyoxime solution and shake one-half minute. Add 10 ml. of chloroform and shake 2 minutes. Separate and withdraw the organic layer into another separatory funnel containing 10 ml. of HCl (0.5N). Repeat the extraction twice more with 5-ml. portions of chloroform and add these to the separatory funnel containing the first chloroform fraction. Discard the aqueous phase.

Shake the combined fractions for one-half minute with the 0.5N acid. Withdraw the organic phase into another separatory funnel. Rinse the aqueous phase into a 150-ml. beaker. Repeat the extraction twice more with 5-ml. portions of 0.5N HCl, and transfer the HCl extracts to the 150-ml. beaker.

Insert a boiling rod in the 150-ml. beaker and boil the HCl extracts for 10 minutes. Add 5 ml. of bromine water and continue boiling until the volume is reduced to 5 ml. or less. Cool in a water bath and transfer to a 25-ml. volumetric flask. Complete the determination as described under Preparation of Nickel Absorbance-concentration Graph, starting at "add 3 drops of bromine water...." Determine the concentration of nickel from the calibration graph.

NOTES

1. Determination of nickel subsequent to extraction of copper with bathocuproine has not been tested.

2. Formic acid is added to decompose HNO_3. Use care to avoid spray loss. Do not evaporate to dense fumes of H_2SO_4. Add 1 or 2 drops of HF, if necessary, to clear the solution.

3. If the sample is known to contain more than 40 and 20 micrograms of copper or nickel, respectively, dilute to volume and obtain a suitable size aliquot. Alternatively, the absorbance may be measured in 1-cm. cells, if the concentration of copper or nickel is not greater than 100 micrograms. In this case prepare a calibration graph for the range of 10 to 100 micrograms using 1-cm. cells.

UCCNHT0000251

DETERMINATION OF IRON IN NIOBIUM METAL
(SPECTROPHOTOMETRIC WITH BATHOPHENANTHROLINE)

SCOPE

This method is designed especially for the determination of traces of iron in high-purity niobium metal, although the method as written is applicable to iron 1 p.p.m. or as high as 2%.

PRINCIPLE OF METHOD

The metal is dissolved in HF and HNO_3, the HNO_3 is removed by evaporation in the presence of formic acid. After reduction of the iron with sodium hydrosulfite, the iron (II) bathophenanthroline complex is extracted with a chloroform-ethanol solution, and the absorbance of the orange-red colored system measured at 536 mμ.

CONCENTRATION RANGE

The range extends from 0.002 to 0.12 mg. of iron in 50 ml. of organic solvent using 1-cm. cells.

INTERFERENCES

None of the constituents present in niobium metal interfere with the method. Large amounts of copper, nickel, manganese, or cobalt which would not ordinarily be found in niobium would interfere (Note 1).

SOLUTIONS AND REAGENTS

Bathophenanthroline (4,7-Diphenyl-1,10-Phenanthroline) - G. F. Smith Chemical Company, Columbus, Ohio - Dissolve 0.1 gram of the reagent in 100 ml. of 95% ethanol. Stir well to dissolve. The solution is stable indefinitely.

Sodium Citrate Solution - Dissolve 100 grams of sodium citrate in one liter of distilled water. Adjust the pH to 5.0 by addition of citric acid. Iron is removed by addition of 3 ml. of 2% cupferron solution to about 150 ml. of the sodium citrate solution in a separatory funnel, allowing to stand a few minutes, and extraction of the iron cupferrate with about 25 ml. of chloroform. Repeat the extraction with chloroform 3 to 4 times to remove all the metal cupferrates and the excess cupferron. A final extraction with 50 ml. of diisopropyl ether aids in extraction of the cupferron.

Sodium Hydrosulfite (also known as sodium dithionite) ($Na_2S_2O_4$) - Prepare FRESH just before use. Dissolve 10 grams of sodium hydrosulfite in 100 ml. of water. Transfer to a separatory funnel and remove the iron by addition of 10 ml. of bathophenanthroline solution and extraction of the complex with 15 ml. of chloroform. Repeat the chloroform extraction until the chloroform solution remains colorless after extraction. The hydrosulfite solution should not stand more than one-half hour before use.

UCCNHT0000252

Standard Iron Solutions

A. Stock Iron Solution (1 ml. of Solution = 1 mg. of Iron) - Dissolve 0.1 gram of high-purity iron metal in 10 ml. of hydrochloric acid. Add 2 ml. of nitric acid and evaporate to near dryness. Add 5 ml. of HCl and dilute to 100 ml. in a volumetric flask.

B. Diluted Standard Iron Solution (1 ml. of solution = 0.01 mg. of Iron) - Transfer 5 ml. of the iron stock solution to a 500-ml. volumetric flask. Add 25 ml. of HCl and dilute to the mark with distilled water.

Sodium Hydroxide (100 g./liter) - Dissolve 50 grams of sodium hydroxide in 500 ml. of water. Add 5 ml. of $MgCl_2$ (100 g./liter) solution, stir for 2 minutes, and heat just below boiling for 10 minutes. Let stand for 15 minutes and filter through Whatman No. 41H paper into a 500-ml. polyethylene container.

PREPARATION OF CALIBRATION CURVE

Place 1-, 2-, 5-, and 10-ml. aliquots of the diluted standard iron solution into separatory funnels. Carry a blank along with the samples. Add 25 ml. of distilled water and 20 ml. of the sodium citrate solution, adjust the pH of the solution with ammonium hydroxide to between 4 and 6 (Note 2), and then add 20 ml. of the fresh pre-extracted sodium hydrosulfite solution. Mix between addition of reagents and allow to stand 15 minutes after the sodium hydrosulfite addition to reduce the iron. Add 10 ml. of the bathophenanthroline reagent and then 15 ml. of chloroform. Shake for 30 seconds, allow the phases to separate, and draw off the chloroform layer into a 50-ml. volumetric flask previously rinsed with 95% ethanol. Add 10 ml. of chloroform to the separatory funnel and repeat the extraction. Dilute the combined chloroform extracts in the 50-ml. volumetric flask to the mark with 95% ethanol. Mix and read the absorbance of the solutions with the blank in the reference beam of the spectrophotometer at 533 mμ in a 1-cm. cell. Plot absorbance versus concentration. The system follows Beer's law.

APPARATUS

Any photoelectric measuring device.

PROCEDURE

Dissolve 1.0 gram of niobium metal (Note 3) in 10 ml. of HF (1:1) and dropwise addition of HNO_3 (15 to 20 drops). Carry a blank on the reagents along with the samples. Evaporate until the niobium begins to hydrolyze, remove from the heat, cool, and add 5 ml. of HF and 2 ml. of formic acid. Evaporate to a volume of 2 or 3 ml., add 30 ml. of the sodium citrate solution, and heat until all the sample is complexed with the citrate. Dilute with 20 ml. of water and cool. Transfer the sample to a separatory funnel containing 10 ml. of 4.5% boric acid. If the pH of the solution is not pH 5, adjust with NH_4OH, and proceed as described in the Preparation of Calibration Curve.

NOTES

1. Copper interference is eliminated by extracting at a pH range of 4 to 6. However, if copper is present in concentrations greater than 10 times the iron content, the copper must be removed. A previous extraction with neocuproine would

UCCNHT0000253

be convenient. Cobalt (1 mg.) can be tolerated if the bathophenanthroline reagent volume is increased from 10 to 20 ml. At least 2.0 mg. of nickel and 10 mg. of manganese may be present.

2. The pH of the solution should not be below 4 in order to prevent the formation of colloidal sulfur in the aqueous phase.

3. The method as described is directly applicable for iron in the 0.0005 to 0.012% range. Outside this range, the sample size, dilution volume, or aliquot taken can be adjusted.

REFERENCES

Gahler, A. R., Hamner, R. M., and Shubert, R. C., Anal. Chem. 33, 1937 (1961).

UCCNHT0000254

DETERMINATION OF MANGANESE IN NIOBIUM METAL (PHOTOMETRIC WITH PERIODATE)

SCOPE

This procedure is designed for the determination of 1 to 100 p.p.m. of manganese in niobium metal.

PRINCIPLE OF METHOD

The metal is dissolved in HF and HNO_3, and the niobium cupferrate extracted with chloroform. After evaporation, the manganese is oxidized with periodate and determined photometrically as permanganate.

CONCENTRATION RANGE

The range of the method at 530 mμ using 5-cm. cells is 0 to 20 micrograms of manganese per 25 ml. The range can be extended up to 100 micrograms (0.1 mg.) of manganese per 25 ml. by preparing a suitable absorbance-concentration graph using 1-cm. cells. The colored system obeys Beer's law and is stable for at least 24 hours.

INTERFERENCES

There are no interferences from other metal ions in the concentrations normally found in niobium metal.

A slight turbidity due to niobium may be removed by centrifuging the colored solution just before photometric measurement.

SPECIAL REAGENTS

$H_2SO_4 + H_3PO_4$ Mixture - Mix 200 ml. of H_2SO_4 (1:1) and 100 ml. of 85% H_3PO_4. Dilute to 500 ml., heat to boiling, and cool.

Silver Nitrate (0.5 g./liter) - Dissolve 50 mg. of the salt in 100 ml. of water. Store in a brown glass dropping bottle.

Standard Manganese Solution - Dissolve 0.3476 g. of reagent grade $KMnO_4$ in 200 ml. of water, add 10 ml. of H_2SO_4 (1:1), and dilute to one liter. One ml. equals 0.1 mg. of manganese. Dilute a 10-ml. aliquot of this stock solution to 500 ml. One ml. equals 0.002 mg. (2 micrograms) of manganese.

SPECIAL APPARATUS

A spectrophotometer capable of utilizing 5-cm. cells.

SPECIAL PRECAUTIONS

All the glassware used in this determination must be thoroughly cleaned. The beakers should be boiled with nitric and perchloric acids, fumed strongly with perchloric acid, and thoroughly rinsed with distilled water. It is advisable to set aside glassware to be used exclusively for this determination. To obtain a low blank, it may be necessary to pass the distilled water through an ion-exchange column and store in a Pyrex bottle.

UCCNHT0000255

PREPARATION OF CALIBRATION GRAPH

Pipet 1-, 2-, 5-, 7-, and 10-ml. aliquots of the standard manganese solution (one ml. equals 2 micrograms of manganese) into 100-ml. beakers. Carry along a blank. Dilute to 10 ml., add 5 ml. of the H_2SO_4-H_3PO_4 mixture and 3 drops of $AgNO_3$ solution. Add a Hengar (Al_2O_3) boiling chip, 0.050 g. of KIO_4, cover, and boil gently for 10 minutes. Cool and transfer to a 25-ml. volumetric flask. Dilute to the mark and mix. Measure the absorbance at 530 mμ in 5-cm. cells using the blank as reference solution. Plot absorbance versus micrograms of manganese per 25 ml.

PROCEDURE

Carry a blank through the entire procedure.

Dissolve 1.000 g. of niobium metal in a 100-ml. platinum dish fitted with a platinum cover, using 5 ml. of HF and dropwise addition of HNO_3. Add 10 ml. of H_2SO_4 and evaporate to light fumes of H_2SO_4. Cool and add HF dropwise to obtain a clear solution. Transfer the sample to a polyethylene beaker containing 50 ml. of HF (2:98) solution. Rinse the platinum dish with HF (2:98) solution and add to the main solution. Chill the sample solution, the cupferron solution (saturated solution in water), and the chloroform to between 0 and 5°C. (Note 1).

Transfer the sample to a chilled, 250-ml. separatory funnel containing 50 ml. of the chilled cupferron suspension. Mix, add 100 ml. of the chilled chloroform and shake one minute. Withdraw the organic layer and discard. Add cupferron, about 5 ml. at a time until precipitation is complete. Repeat the extraction with 30 to 40 ml. of chloroform until the lower layer is colorless. Rinse the funnel stem with chloroform, then with water. Add 50 ml. of isopropyl ether and shake one minute.

Withdraw the aqueous layer to a 250-ml. Teflon beaker and evaporate to 50 ml. or less. Add 20 ml. of HCl and 10 ml. of HNO_3, cover partially, and evaporate to remove ammonium salts and HF (Note 2). Cool, transfer to a 100-ml. Pyrex beaker. Add 4 or 5 drops of $HClO_4$ and again evaporate to one ml. of H_2SO_4 or less. Dilute to 10 ml. and neutralize with NaOH (pH paper). Continue as described in Preparation of Calibration Graph, starting with "Add 5 ml. of H_2SO_4-H_3PO_4 mixture...." (Note 3).

NOTES

1. If the temperature of the solution is not less than 5°C., the niobium cupferrate is only slightly soluble. The cupferron solution should be freshly prepared, nearly colorless, and should contain some undissolved reagent.

2. If the solution turns black, add HNO_3 dropwise and repeat the fuming. Continue adding HNO_3 and evaporating to fumes until all organic matter is destroyed.

3. If the depth of color is beyond the range of 5-cm. cells, measure the absorbance in 1-cm. cells and refer to the proper calibration graph.

UCCNHT0000256

DETERMINATION OF MOLYBDENUM IN NIOBIUM METAL (PHOTOMETRIC WITH THIOCYANATE)

SCOPE

This method is suitable for the determination of molybdenum in niobium within the range of 1 to 100 p.p.m.

PRINCIPLE OF METHOD

After dissolution of the sample in HF and HNO_3 and removal of the excess HF with H_2SO_4, the niobium is complexed with ammonium citrate. The acidity is adjusted so that the H_2SO_4 concentration is 1:9. Ferric ion, sodium thiocyanate, and stannous chloride are then added. The molybdenum thiocyanate complex is extracted with butyl acetate and measured spectrophotometrically at 470 mμ.

CONCENTRATION RANGE

The colored system follows Beer's law in the range from 1 to 25 micrograms of molybdenum in 30-ml. volume using 5-cm. cells. The range may be extended to 100 micrograms by using 1-cm. cells.

INTERFERENCES

Under the conditions of the method, a 100-to-1 ratio of other metals, besides molybdenum, which react with thiocyanate, is without measurable effect. Ferric ion is necessary for the molybdenum thiocyanate color system. However, if the final butyl acetate extract is contaminated with ferrous ion, the extract will have a pink tint instead of yellow. Thus, all glassware which will come in contact with the colored system after color development must be free from traces of iron. This will cause a positive error.

SPECIAL REAGENTS

Sodium Thiocyanate - Dissolve 20 g. of NaCNS in 100 ml. of water. Prepare fresh daily.

Stannous Chloride - Transfer 70 g. of $SnCl_2 \cdot 2H_2O$ to a 250-ml. beaker. Add 20 ml. of concentrated HCl and warm until dissolved. Cool, transfer to a 200-ml. volumetric flask, and dilute to the mark. Add a small chunk of metallic tin as a preservative.

Ammonium Citrate - Dissolve 400 g. of ammonium citrate in one liter of water.

Sulfuric Acid Solution - Dilute 200 ml. of H_2SO_4 (1:1) to one liter, mix, and cool.

Butyl Acetate - Saturate the butyl acetate with a small excess of NaCNS and store in a dark bottle. Prepare fresh daily.

Ferric Sulfate Solution - Dissolve one gram of $Fe_2(SO_4)_3$ in 100 ml. of H_2SO_4 (1:9).

UCCNHT0000257

Standard Molybdenum Solution - Transfer 0.1800 g. of $(NH_4)_6Mo_7O_{24}\cdot 4H_2O$ (assay 83.0% MoO_3) to a 250-ml. beaker and dissolve in 50 ml. of H_2SO_4 (1:9) by warming. Transfer to a liter volumetric flask, cool, dilute to the mark, and mix. One ml. of this stock solution contains 0.1 mg. of molybdenum. Dilute 10.0 ml. of the stock solution to one liter with H_2SO_4 (1:99) (one ml. = one microgram of molybdenum).

PREPARATION OF ABSORBANCE-CONCENTRATION GRAPH

Transfer 0 (blank), 1-, 2-, 5-, 10-, and 25-ml. aliquots of the diluted molybdenum stock solution to 250-ml. beakers. Add 5 ml. of H_2SO_4 (1:9) and 2 ml. of ferric sulfate solution. Dilute to 50 ml. and chill in an ice bath to 4°C. or colder. Continue according to the procedure below, starting with "chill all reagents...." Measure the absorbance in 5-cm. cells at 470 mμ using the blank as reference solution. Plot absorbance versus micrograms of molybdenum on co-ordinate paper.

PROCEDURE

Transfer a one-gram sample to a 100-ml. platinum dish or 250-ml. Teflon beaker fitted with a cover. Add 10 ml. of HF and a few drops of HNO_3 to complete the dissolution. Add more HNO_3 and warm, if necessary. Add 10 ml. of H_2SO_4 and 2 ml. of formic acid, carefully swirl to mix, and evaporate until H_2SO_4 fumes begin to evolve (Note 1). Cool, add 10 ml. of ammonium citrate solution, stir, and transfer to a 250-ml. beaker. Police the platinum dish and wash into the beaker. Adjust the pH of the sample solution to 5 to 7 (pH paper) with NH_4OH, dilute to 50 ml., and boil to obtain a clear solution. Add 10 ml. of H_2SO_4 (1:1) and 2 ml. of ferric sulfate solution (Notes 2 and 3).

Chill all reagents and the sample in an ice bath to 4°C. or colder. Transfer the sample to a 125-ml. separatory funnel by washing with 15 ml. of H_2SO_4 (1:9). Add 3 ml. of NaCNS solution and mix. Add 5 ml. of $SnCl_2$ solution, mix, and add exactly 30.0 ml. of butyl acetate. Shake vigorously for one minute and allow the phases to separate. Discard the lower layer. Add 50 ml. of H_2SO_4 (1:9), 2 ml. of NaCNS, and 2 ml. of $SnCl_2$. Shake for one minute, separate, and discard the lower layer. Rinse the funnel stem with water and dry with a swab of filter paper.

Filter the butyl acetate layer through a small plug of cotton inserted in the funnel stem. Discard the first few ml. of the filtrate and collect the remainder in a dry, small flask. Measure the absorbance in a dry 5-cm. cell at 470 mμ using the blank as reference solution.

NOTES

1. Formic acid is added to decompose HNO_3. Use care to avoid spray loss. Do not evaporate to dense fumes of H_2SO_4. Add 1 or 2 drops of HF, if necessary, to clear the solution.

2. If the sample is known to contain more than 25 micrograms of molybdenum, dilute to volume and obtain a suitable size aliquot. Alternatively, the absorbance may be measured in 1-cm. cells if the concentration is not greater than 100 micrograms. In this case, prepare a calibration graph for the range 10 to 100 micrograms using 1-cm. cells.

UCCNHT0000258

DETERMINATION OF TANTALUM IN NIOBIUM
(PHOTOMETRIC WITH METHYL VIOLET)

SCOPE

This method is suitable for the determination of small amounts of tantalum (0.01 to 0.20%) in niobium.

PRINCIPLE OF METHOD

After dissolution of the sample, traces of boron are removed by volatilization with HF. The salts are fused in sodium bisulfate and the melt dissolved in ammonium oxalate solution. The tantalum is extracted as the methyl violet-fluoride complex into benzene and determined spectrophotometrically.

CONCENTRATION RANGE

The range using a 1-cm. cell is from 0.005 to 0.1 mg. of tantalum in 25 ml. of benzene. The colored system follows Beer's law and is stable for at least 4 hours in a stoppered container.

INTERFERENCES

Boron is a very serious interference and removal of boron by volatilization with HF is incorporated in the procedure (Note 1). Titanium, zirconium, and niobium do not interfere.

SPECIAL REAGENTS AND EQUIPMENT

Centrifuge

Centrifuge Tubes - 40-ml. volume, boron-free glass, quartz, or benzene-insoluble plastic tubes.

Methyl Violet - Dissolve 0.1 g. of methyl violet in 100 ml. of water.

Ammonium Oxalate - Dissolve 40 g. of ammonium oxalate in one liter of water.

Blank Solution - Fuse 8 g. of sodium bisulfate until sulfuric acid fumes are no longer evolved. Dissolve the melt in 100 ml. of ammonium oxalate and dilute to 200 ml. in a volumetric flask with water.

1.5N Hydrofluoric Acid - Dilute 27 ml. of 48% reagent-grade hydrofluoric acid to 500 ml. Store in a polyethylene bottle.

Standard Tantalum Solution - Dissolve 0.025 g. of tantalum metal or 0.0305 g. of tantalum pentoxide in 3 to 5 ml. of hydrofluoric acid to which 2 drops of nitric acid have been added. Add 2 ml. of H_2SO_4 and evaporate to dryness. Fuse with 4.0 g. of sodium bisulfate until sulfuric acid fumes cease to be evolved. Dissolve the melt in 50 ml. of ammonium oxalate (40 g./liter). Cool and transfer to a 100-ml. volumetric flask using water. Dilute to the mark with water. Each ml. is equal to 0.25 mg./ml.

UCCNHT0000259

Transfer a 10-ml. aliquot to a 50-ml. volumetric flask and dilute to the mark with the blank solution. Each ml. is equal to 0.050 mg./ml. Transfer a 10-ml. aliquot of this solution (0.050 mg. of tantalum per ml.) to a 50-ml. volumetric flask and dilute to the mark with the blank solution. Each ml. is equal to 0.010 mg./ml.

PREPARATION OF CALIBRATION GRAPH

Transfer aliquots containing 0.02, 0.05, 0.075, and 0.10 mg. of tantalum to 125-ml. separatory funnels. Carry along a blank at the same time. Dilute all the solutions by addition of sufficient quantity of the blank solution with a pipet to make up to 4 ml. (Note 2). Add 2 ml. of water. Working on each funnel separately, add the following reagents successively with pipets: 2.0 ml. of 1.5N hydrofluoric acid, 25.0 ml. of benzene, and 2.0 ml. of methyl violet. Shake exactly 20 seconds. Allow the layers to separate; immediately draw off the aqueous phase and discard. Immediately draw off the organic phase and store in a stoppered quartz centrifuge tube (Note 3). Complete the remaining aliquots in the same manner. Centrifuge for 20 to 30 seconds. Measure the absorbance of the benzene solution in a spectrophotometer in 1-cm. cells at 580 mμ, nulling the instrument against the reagent blank. Plot absorbance versus milligrams of tantalum.

PROCEDURE

Transfer 0.500 g. of sample to a platinum dish. Add 10 ml. of hydrofluoric acid. Add nitric acid slowly and dropwise until the sample is dissolved. Add 2 ml. of sulfuric acid and evaporate to dryness on a sand bath to remove traces of boron (and silicon).

Cool, add 8.0 g. of $NaHSO_4$, and fuse until sulfuric acid fumes cease to be evolved (Note 4). Dissolve the melt in 100 ml. of ammonium oxalate (40 g./liter). Cool and transfer to a 200-ml. volumetric flask using water. Dilute to the mark with water.

Start a blank by pipetting 20 ml. of the blank solution into a separatory funnel.

Transfer a 20-ml. aliquot to a separatory funnel and add 10 ml. of water. If more than one sample is being analyzed, handle each individually. Add 10 ml. of 1.5N hydrofluoric acid, pipet 25 ml. of benzene, and pipet 10 ml. of methyl violet solution. Shake vigorously for exactly 20 seconds. Allow the layers to separate, immediately draw off the aqueous phase and discard. Immediately draw off the organic phase and store in a stoppered quartz centrifuge tube. Complete the remaining samples in the same manner.

Centrifuge for 20 to 30 seconds. Measure the absorbance of the benzene solution in a spectrophotometer in 1-cm. cells at 580 mμ, nulling the instrument against the reagent blank.

NOTES

1. Boron is the most serious of the interferences; however, it is not as sensitive as tantalum. Iodide, nitrate, and mercury (I) enhance the color. Calcium and rare earths inhibit the color formation slightly. Poluetkov, N. S., Konenenko, L. I., Lauer, R. S., Journal of Analytical Chemistry (U.S.S.R.) 13, 449 (1958) (English translation).

UCCNHT0000260

2. The pH for optimum extraction of the tantalum methyl violet-fluoride complex into benzene is 2.3. Careful additions are necessary to assure this pH.

3. If quartz or boron-free glass is unavailable, draw off and store the organic layer in a platinum or porcelain dish and cover with a watch glass. Handling each sample individually, transfer the organic layer to a centrifuge tube and centrifuge EXACTLY 20 seconds. Stop centrifuge as quickly as possible and measure the absorbance of the solution. Contact with glass must be held to a minimum because of the fluoride present which is necessary in the extraction.

4. Do not fuse for a prolonged time or the melt will not dissolve in the ammonium oxalate leach.

UCCNHT0000261

DETERMINATION OF TRACES OF TANTALUM IN NIOBIUM (ION EXCHANGE SEPARATION AND PHOTOMETRIC DETERMINATION WITH METHYL VIOLET)

SCOPE

This method is suitable for the determination of small amounts of tantalum (0.0005 to 0.20%) in niobium metal.

PRINCIPLE OF METHOD

The bulk of the niobium is separated on the ion exchange column containing Dowex 1 resin. The resin is decomposed by ignition, traces of boron are removed, if present, by volatilization with HF, the tantalum oxide is fused in $NaHSO_4$, and the melt is dissolved in ammonium oxalate solution. The tantalum in an aliquot of the solution is extracted as the methyl violet-fluoride complex into benzene and determined spectrophotometrically.

CONCENTRATION RANGE

The range using a 1-cm. cell is from 0.01 to 0.1 mg. of tantalum in 25 ml. of benzene. The colored system follows Beer's law and is stable for at least 4 hours in a stoppered container.

INTERFERING ELEMENTS

Boron is a very serious interference and removal by volatilization with HF is incorporated in the procedure (Note 1). Titanium, zirconium, and niobium do not interfere (Note 4).

SPECIAL APPARATUS

1. The columns are constructed of transparent Tygon tubing, 12 inches long and 1/4 inch I.D. The flow is controlled by a hose cock on the Tygon tubing.

2. The resin is Dowex 1, 100 to 200 mesh, 8 to 10% divinylbenzene cross linkage. Prepare a suspension of the resin in dilute HCl (1:19).

3. A plug of Dynel wool, about 3/8 inch thick, is inserted into the tube about 2 inches from the bottom. Add the suspension of resin in one addition. Enough resin should be present to have a settled column about 4 inches high. Drain to just above the top of the column.

Ammonium Chloride-hydrofluoric Acid - Dissolve 140 g. of ammonium chloride and 40 ml. of hydrofluoric acid in water, and dilute to one liter with water. Store in a polyethylene bottle.

Hydrochloric Acid-hydrofluoric Acid - Add 250 ml. of HCl to 300 ml. of water, add 200 ml. of HF, and dilute to one liter with water. Store in a polyethylene bottle.

UCCNHT0000262

Centrifuge

Centrifuge Tubes - 40-ml. volume, boron-free glass, quartz, or benzene-insoluble plastic tubes.

Methyl Violet - Dissolve 0.1 g. of methyl violet in 100 ml. of water.

Ammonium Oxalate - Dissolve 40 g. of ammonium oxalate in one liter of water.

Blank Solution - Fuse 8 g. of sodium bisulfate until sulfuric acid fumes are no longer evolved. Dissolve the melt in 100 ml. of ammonium oxalate and dilute to 200 ml. in a volumetric flask with water.

1.5N Hydrofluoric Acid - Dilute 27 ml. of 48% reagent-grade hydrofluoric acid to 500 ml. Store in a polyethylene bottle.

Standard Tantalum Solution - Dissolve 0.025 g. of tantalum metal or 0.0305 g. of tantalum pentoxide in 3 to 5 ml. of hydrofluoric acid to which 2 drops of nitric acid have been added. Add 2 ml. of H_2SO_4 and evaporate to dryness. Fuse with 4.0 g. of sodium bisulfate until sulfuric acid fumes cease to be evolved. Dissolve the melt in 50 ml. of ammonium oxalate (40 g./liter). Cool and transfer to a 100-ml. volumetric flask using water. Dilute to the mark with water. Each ml. is equal to 0.25 mg./ml.

Transfer a 10-ml. aliquot to a 50-ml. volumetric flask and dilute to the mark with the blank solution. Each ml. is equal to 0.050 mg./ml. Transfer a 10-ml. aliquot of this solution (0.050 mg./ml.) to a 50-ml. volumetric flask and dilute to the mark with the blank solution. Each ml. is equal to 0.010 mg./ml.

PREPARATION OF CALIBRATION GRAPH

Transfer aliquots containing 0.02, 0.05, 0.075, and 0.10 mg. of tantalum to 125-ml. separatory funnels. Carry along a blank at the same time. Dilute all the solutions by addition of sufficient quantity of the blank solution with a pipet to make up to 4 ml. (Note 2). Add 2 ml. of water. Working on each funnel separately, add the following reagents successively with pipets: 2.0 ml. of 1.5N hydrofluoric acid, 25.0 ml. of benzene, and 2.0 ml. of methyl violet. Shake exactly 20 seconds. Allow the layers to separate; immediately draw off the aqueous phase and discard. Immediately draw off the organic phase and store in a stoppered quartz centrifuge tube (Note 3). Complete the remaining aliquots in the same manner. Centrifuge for 20 to 30 seconds. Measure the absorbance of the benzene solution in a spectrophotometer in 1-cm. cells at 580 mμ using the reagent blank to null the instrument. Plot absorbance versus milligrams of tantalum.

PROCEDURE

Transfer a suitable sample (1.00 to 5.00 g.) to a 300-ml. platinum dish. Add 10 ml. of hydrofluoric acid and nitric acid dropwise until the sample is dissolved. Evaporate on a steam bath until almost dry. The bottom of the dish should still be moist. Add 50 ml. of the ammonium chloride-hydrofluoric acid solution and warm gently to obtain a clear solution.

Cool, transfer the solution to the column in small increments, and drain to 1 cm. above the resin bed. Add 25 ml. of the hydrochloric-hydrofluoric acid in

UCCNHT0000263

small increments and allow to drain dry. Transfer the resin and Dynel plug to a 100-ml. platinum dish with a jet of water. Evaporate on a sand bath until dry. Ignite at a low temperature and finally at 500°C. to remove all organic matter.

Cool and add 5 ml. of hydrofluoric acid and 2 ml. of H_2SO_4, and heat on a sand bath to dryness to remove traces of boron (and silicon).

Cool, add 4.0 g. of $NaHSO_4$ and fuse until sulfuric acid fumes cease to be evolved. Dissolve the melt in 50 ml. of ammonium oxalate (40 g./liter). Cool and transfer to a 100-ml. volumetric flask using water. Dilute to the mark with water.

Transfer a 20-ml. aliquot to a separatory funnel. Transfer a 20-ml. aliquot of the blank solution to a separatory funnel. Add 10 ml. of water. Proceed on each funnel separately. Add the following reagent successively with pipets: 10.0 ml. of 1.5N hydrofluoric acid, 25.0 ml. of benzene, and 10.0 ml. of methyl violet. Shake exactly 20 seconds. Allow the layers to separate; immediately draw off the aqueous phase and discard. Immediately draw off the organic phase and store in a stoppered quartz centrifuge tube (Note 3). Complete the remaining aliquots in the same manner. Centrifuge for 20 to 30 seconds. Measure the absorbance of the benzene solution in a spectrophotometer in 1-cm. cells at 580 mμ using the reagent blank to null the instrument. Find the concentration of tantalum present in the aliquot by reference to the calibration graph.

NOTES

1. Boron is the most serious of the interferences; however, it is not as sensitive as tantalum. Iodide, nitrate, and mercury (I) enhance the color. Calcium and rare earths inhibit the color formation slightly. N. S. Poluetkov, L. I. Konenenko, R. S. Lauer, JOURNAL OF ANALYTICAL CHEMISTRY (U.S.S.R.) 13, 449 (1958) (English translation).

2. The pH for optimum extraction of the tantalum methyl violet-fluoride complex into benzene is 2.3. Careful additions are necessary to assure this pH.

3. If quartz or boron-free glass is unavailable, draw off and store the organic layer in a platinum or porcelain dish and cover with a watch glass. Handling each sample individually, transfer the organic layer to a centrifuge tube and centrifuge EXACTLY 20 seconds. Stop centrifuge as quickly as possible and measure the absorbance of the solution. Contact with glass must be held to a minimum because of the fluoride present which is necessary in the extraction. If boron-free equipment is used, the timing of extraction and centrifuging is not critical.

4. To reduce boron contamination, reserve a set of equipment for use with this determination only.

UCCNHT0000264

DETERMINATION OF SMALL AMOUNTS OF TIN IN NIOBIUM METAL (PHOTOMETRIC WITH PYROCATECHOL VIOLET)

SCOPE

This method is designed for the determination of tin in niobium in the range of 0.0003 to 0.5%.

PRINCIPLE OF METHOD

The sample is dissolved in HF and HNO_3 acids. After removal of HF and HNO_3 by fuming with H_2SO_4, the final solution is adjusted to approximately 1M in HCl and 2M in H_2SO_4. The tin (IV) is extracted with 0.01M tris(2-ethylhexyl)-phosphine oxide in cyclohexane. Any interfering ions such as antimony or arsenic are removed by back-extraction with a 1M HCl-2M H_2SO_4 mixture. The color is developed with pyrocatechol violet and measured spectrophotometrically at 575 mμ.

CONCENTRATION RANGE

The colored system follows Beer's law over the range of 3 to 30 micrograms of tin in 10 ml. of organic solvent using 1-cm. cells. The colored system is stable for at least 12 hours.

INTERFERENCES

Antimony, arsenic, and chromium (VI) interfere with the colored system but these elements are not ordinarily found in high-purity niobium metal, and chromium remains as chromium (III) in the steps of the procedure. HF and HNO_3 interfere but are removed by volatilization by strong fuming with H_2SO_4.

REAGENTS AND SOLUTIONS

Standard Tin Solution - Dissolve 0.1000 gram of tin in 100 ml. of HCl. Cool and dilute to one liter with water. Pipet 10.0 ml. of this solution to a 100-ml. volumetric flask. Dilute to volume with the 1M HCl-2M H_2SO_4 mixture. Each ml. contains 10 μg. (micrograms) of tin.

1M HCl-2M H_2SO_4 Mix - Add 85 ml. of concentrated HCl to 222 ml. of H_2SO_4 (1:1), and dilute to one liter with water.

Tris(2-Ethylhexyl)Phosphine Oxide Solution (TEHPO) - 0.01M in cyclohexane (3.8665 g./liter). The reagent is available from Chemicals Procurement Company, 18-17 130th Street, College Point, Long Island, or K & K Laboratories, Inc., 177-10 93rd Avenue, Jamaica 33, New York.

Pyrocatechol Violet (0.5 g./liter) - Weigh out 0.0500 g. of pyrocatechol violet in a 100-ml. volumetric flask. Dilute to volume with 95% ethanol. Shake until dissolved. Prepare FRESH daily.

Pyridine - Reagent grade.

UCCNHT0000265

PREPARATION OF CALIBRATION GRAPH

Pipet 0 (reagent blank), 1-, 2-, 5-, and 10-ml. portions of the standard tin solution into clean, dry 125-ml. separatory funnels. Add 5 ml. of the TEHPO solution with a pipet and shake for 10 minutes. Allow the layers to separate, drain off the aqueous portion and discard. Pipet 2.0-ml. portions of the organic phase into clean, dry 10-ml. volumetric flasks. Add 2.0 ml. of the pyrocatechol violet solution with a pipet into each flask and mix. Pipet 1.0 ml. of pyridine into each volumetric flask and mix. Dilute to volume with 95% ethanol and mix well. Allow to stand in a water bath (55 to 65°C.) for 20 minutes. Cool to room temperature.

Measure the absorbance of the solution in 1-cm. cells at maximum absorbance which occurs near 575 mμ, placing the reagent blank in the reference cell.

Prepare the absorbance-concentration graph by plotting the absorbance of the solutions versus tin concentration.

PROCEDURE

Dissolve the sample in HF with dropwise addition of HNO_3 in a platinum dish (Note 1). Carry a blank through all steps of the procedure. Add 22 ml. of H_2SO_4 (1:1) and evaporate to strong fumes of sulfuric acid. Wash down the sides of the dish with water and evaporate to strong fumes. Repeat once again. Cool, add 25 ml. of water, and warm on the hot plate. Transfer the sample to a 100-ml. volumetric flask containing 9.0 ml. of HCl. Cool to room temperature, dilute to volume, shake well, and allow to stand until the bulk of hydrolyzed niobium settles to the bottom. Filter 60 to 65 ml. of the solution through a Whatman filter No. 40 paper or equivalent into a clean beaker. (Some of the hydrolyzed niobium will run through the paper, but will be removed later in the procedure.) Transfer an aliquot containing 5 to 75 μg. of tin to a clean, dry separatory funnel. Add 5.0 ml. of the TEHPO solution with a pipet and shake for ten minutes. Allow the layers to separate, draw off the aqueous portion, and discard. Add 5 ml. of 1M HCl-2M H_2SO_4 solution, and shake again for five minutes. Draw off the aqueous portion and discard. The hydrolyzed niobium will form an emulsion with the organic. Transfer to a centrifuge and centrifuge for a minute or two. Draw off a 2-ml. portion of the organic phase with a pipet and proceed as outlined under Preparation of Calibration Graph.

NOTES

1. If the sample contains acid-insoluble tin, such as oxide, the solution, after acid dissolution, may be filtered and the residue burned off at 600°C. in a porcelain crucible. The residue is then fused with a known weight of Na_2CO_3 and dissolved in the acid solution. A blank must be carried through all steps of this procedure. Any tin compound infusible in Na_2CO_3 cannot be run with this method since ordinary Na_2O_2 contains too much tin as an impurity.

REFERENCES

1. Ross and White, Anal. Chem. 33, 421 (1961)
2. Ibid., 33, 424 (1961)

UCCNHT0000266

DETERMINATION OF TUNGSTEN IN NIOBIUM (SPECTROPHOTOMETRIC WITH DITHIOL)

SCOPE

This method is applicable for the determination of tungsten in niobium greater than 5 p.p.m. By suitable modification, tungsten can be determined down to 1 p.p.m. (Note 4).

PRINCIPLE OF METHOD

The sample is dissolved in HF and HNO_3, and then fumed gently in H_2SO_4 to remove the HNO_3. Molybdenum is separated by extraction from an HCl (1:4) solution with dithiol in amyl acetate. Tungsten is reduced in 9 to 11N HCl with Ti(III), extracted with dithiol, and determined spectrophotometrically.

CONCENTRATION RANGE

The range extends from 0.005 to 0.20 mg. of tungsten in 25 ml. of amyl acetate using 1-cm. cells if the absorbance is measured at 640 mμ (Note 4).

INTERFERENCES

There are no interferences from other metal ions in the concentrations normally found in niobium metal. However, if appreciable molybdenum is present, this method is not applicable (Note 1).

SPECIAL REAGENTS AND SOLUTIONS

Zinc Dithiol Solution - Dissolve 1.0 g. of zinc dithiol in 100 ml. of NaOH (10 g./liter) solution. Prepare just before use. The zinc dithiol is available from Fisher Scientific Company.

Isoamyl Acetate - Purified grade. The liquid should be colorless.

Tin (II) Chloride Solution - Dissolve 200 g. of $SnCl_2 \cdot 2H_2O$ in 500 ml. of HCl and dilute to one liter with water. Place a few pieces of metallic tin in the solution.

Titanium (III) Chloride Solution - Dissolve 10 g. of tungsten-free titanium metal with 200 ml. of HCl (1:1) in an Erlenmeyer flask. As soon as the metal has dissolved, cool the solution, dilute to 500 ml. with HCl (1:1), and store in a stoppered bottle.

Dithiol (Toluene-3,4-dithiol) - Obtainable in one-gram vials from Eastern Chemical Corp., 24 Spring Street, Newark, New Jersey. The reagent should be kept refrigerated until needed, and, if possible, under an inert atmosphere (Note 2).

Standard Tungsten Stock Solution (100 micrograms per ml.) - Dissolve 0.1794 g. of $Na_2WO_4 \cdot 2H_2O$ in water. Add 100 ml. of sodium hydroxide solution (100 g./liter) and dilute to one liter. Store in a caustic-resistant bottle.

UCCNHT0000267

Dilute Standard Tungsten Solution (10 micrograms per ml.) - Dilute 50 ml. of the standard tungsten stock solution (100 micrograms per ml.) to 500 ml. with water.

PREPARATION OF CALIBRATION GRAPH

Transfer 0 (blank), 1-, 2-, 5-, 10-, 15-, and 20-ml. aliquots of the dilute standard tungsten solution (10 γ/ml.) to a 125-ml. flask. Add 3 ml. of sulfuric acid and evaporate to light fumes of sulfuric acid. Cool. Cautiously add 5 ml. of water, 25 ml. of HCl, 5 ml. of tin (II) chloride solution, and 10 ml. of titanium (III) chloride solution (Note 2). Heat to about 80 to 90°C. and add 10 ml. of zinc dithiol solution. Heat in a hot water bath at 80 to 90°C. for 20 minutes. Cool and transfer to a separatory funnel, rinse with two 5-ml. portions of HCl (4:1). Add 25.0 ml. of isoamyl acetate with a pipet and shake vigorously for one minute. Allow the layers to separate, draw off the aqueous phase and discard. Wash the organic layer twice with 3-ml. portions of HCl (4:1). Discard the acid washings.

Transfer a portion of the colored organic solution to 1-cm. cells. Measure the absorbance of the solution at 640 mμ versus the blank which is placed in the reference cell of the spectrophotometer. Prepare a calibration graph by plotting concentration versus absorbance of the solution. The colored system follows Beer's law and is stable for 24 hours (Note 3).

PROCEDURE

Transfer a sample not greater than one gram or containing not more than 0.2 mg. of tungsten to a 50-ml. platinum dish. Add 5 ml. of HF and HNO_3 dropwise until the sample is in solution. Add 3 ml. of H_2SO_4 and evaporate to light fumes. Cool and add 0.5 ml. of HF.

Add 15 ml. of HCl (1:4). Transfer to a 125-ml. Erlenmeyer flask and use 5 ml. of HCl (1:4) to rinse the platinum dish. Cool to below 10°C. and add 5 ml. of tin (II) chloride. Add 10 ml. of dithiol amyl acetate solution (0.5 g. of dithiol (not zinc dithiol) per 100 ml. of amyl acetate), cork with a rubber stopper, and shake 5 minutes on a mechanical shaker. Transfer to a separatory funnel and rinse the flask with two 5-ml. portions of amyl acetate. Allow the layers to separate. Transfer the acid layer containing the tungsten quantitatively back to the Erlenmeyer flask. (Discard the amyl acetate layer which contains the molybdenum.) Evaporate to fumes of sulfuric acid. If charring occurs, add several drops of HNO_3, and again evaporate to fumes of sulfuric acid. Cool, add 0.5 ml. of HF, and cautiously add 40 ml. of HCl. Continue as in the Preparation of Calibration Graph, starting with "Add 5 ml. of tin (II) chloride solution, add 10 ml. of titanium (III)...."

NOTES

1. About 0.4 mg. of molybdenum may be removed by extraction in the procedure. The method is not applicable if more than this concentration is present in the sample or aliquot.

2. The acidity of the solution must be between 9 and 11N for complete reduction of tungsten (VI) to tungsten (V).

3. If the organic layer is turbid, it can be filtered through a cotton plug.

4. The range can be lowered by measuring the absorbance in 5-cm. cells.

UCCNHT0000268

DETERMINATION OF TRACES OF ZIRCONIUM AND TITANIUM IN NIOBIUM (ION EXCHANGE-SPECTROPHOTOMETRIC METHOD)

SCOPE

This method is designed for the determination of traces (p.p.m.) of zirconium and titanium in niobium metal. The same procedure is applicable for these elements in tantalum metal.

PRINCIPLE OF METHOD

After dissolution of the sample in HF and HNO_3 acids and removal of the nitric acid, the solution is adjusted to HF (1:9) and HCl (1:1). The solution is passed through an ion exchange column containing Dowex 1 anion resin. Zirconium and titanium pass through the column while tantalum and niobium remain on the column. Zirconium is determined spectrophotometrically with phenylfluorone. The titanium is extracted as the thiocyanate complex by tri-n-octylphosphine oxide (TOPO) dissolved in cyclohexane and is determined spectrophotometrically.

CONCENTRATION RANGE

The concentration range for zirconium extends from 1 to 4 micrograms (μg.) in 25 ml. using 5-cm. cells. The system follows Beer's law and is stable for 3 hours.

The concentration range for titanium extends from 1 to 5 micrograms (μg.) in a volume of 25 ml. using 1-cm. cells. The system follows Beer's law and is stable for 12 hours.

INTERFERENCES

Zirconium - Alkali metals, alkaline earths, thorium, aluminum, zinc, cadmium, and bivalent metals do not interfere. Titanium, tin, colored ions, antimony, tantalum, niobium, hafnium, phosphate, fluoride, and nitrate interfere, as well as excessive amounts of sulfate. Interference of iron, chromium, cobalt, nickel, bismuth, silver, tungsten, niobium, and tantalum is eliminated by the ion exchange separation. The small amount of titanium remaining is eliminated by an H_2O_2-ammonium hydroxide separation. Nitrate, fluoride, and excessive amounts of sulfate are eliminated by volatilization when fuming down almost to dryness before the color development.

Titanium - Niobium interferes by formation of a color. Niobium interference is eliminated by the ion exchange separation.

APPARATUS AND RESIN

1. ION EXCHANGE COLUMNS

The columns are constructed of polystyrene and are approximately 18 inches long and one inch I.D. The bottom of the tube is closed by a waxed No. 5 rubber stopper with a 3/16-inch hole. A 3-inch length of polystyrene tubing with a 3/16 inch O.D. is inserted in the hole. A 3-inch length of Tygon tubing is attached and the flow controlled by a hose cock on the Tygon tubing.

UCCNHT0000269

2. RESIN

The column packing is Dowex 1 resin, 200 to 400 mesh, 8 to 10% divinylbenzene cross linkage. Prepare a suspension of the resin in dilute HCl (1:19). Allow the coarser fraction to settle 10 to 15 minutes and remove the fines by decantation. Repeat the process about 7 to 8 times until most of the fine material is removed from the suspension.

3. PREPARATION OF COLUMN

The bottom of the ion exchange column is covered with a 1/4- to 3/8-inch layer of acid-resistant vinyl chloride plastic wool (Dynel). Transfer the suspension of resin to the column in one addition. Sufficient resin should be present to form a settled column 12 inches high. The loaded column should be eluted several times alternately with HCl (3:1) and HCl (1:9) to remove the fines. The column is then washed with HCl (1:3) and is ready for use. At no time should the column be allowed to run dry. The flow rate should be about 100 to 125 ml. per hour.

4. POLYETHYLENE WARE

400-, 600-, and 1000-ml. beakers and bottles for preparing, storing, and dispensing acid mixtures. Graduated 100-ml. cylinder.

SOLUTIONS AND REAGENTS

Hydrochloric-hydrofluoric Acid Solution - Add 100 ml. of HF to 200 ml. of water, add 500 ml. of HCl, and dilute to one liter with water. Cool to room temperature.

Ammonium Chloride Solution (240 g./liter) - Dissolve 240 g. of NH_4Cl in 800 ml. of water, and dilute to one liter with water.

Niobium and Tantalum Eluant - To 600 ml. of the ammonium chloride solution, add 40 ml. of HF. Adjust the pH from 5.5 to 6.5 with NH_4OH. (Approximately 80 to 85 ml. will be required.) Dilute to one liter with water (Note 1).

Gelatin Solution (5 g./liter) - Dissolve 0.5 g. of gelatin in 100 ml. of boiling water.

Phenylfluorone (0.3 g./liter) - 0.0300 g. of phenylfluorone in 100 ml. of ethanol containing one ml. of HCl. Mix on a shaker until clear. The solution is stable for one week.

Zirconium Standard Solutions

A. Stock Solution - Dissolve 0.0353 g. of $ZrOCl_2 \cdot 8H_2O$ in 50 ml. of HCl and dilute to one liter.

B. Dilute Standard Solution - Pipet a 10-ml. portion of the stock solution into a 200-ml. volumetric flask, add 25 ml. of HCl, and dilute to volume. Each ml. contains 0.5 microgram (μg.) of zirconium and 0.25 ml. of HCl.

UCCNHT0000270

Titanium Standard Solutions

A. Stock Solution - Dissolve 0.0500 g. of titanium metal in 100 ml. of HCl. Transfer to a liter volumetric flask, add 400 ml. of HCl, and dilute to volume with water. (Solution is 6N or (1:1) with respect to HCl.)

B. Dilute Standard Solution - Pipet a 5-ml. portion of the stock solution to a 500-ml. volumetric flask, add 250 ml. of HCl, and dilute to volume with water. Each ml. contains 0.5 microgram (μg.) of titanium. The HCl concentration is about 6N or (1:1).

Tri-n-octylphosphine Oxide Solution (TOPO) - Approximately 0.01M in cyclohexane. Dissolve 3.9 g. of tri-n-octylphosphine oxide (Eastman Chemical Products, Inc., Eastman Kodak Company) in one liter of cyclohexane.

PREPARATION OF ZIRCONIUM CALIBRATION GRAPH

Transfer 0 (blank), 1-, 2-, 4-, 6-, and 8-ml. aliquots of the dilute standard zirconium solution to 25-ml. volumetric flasks. Add enough HCl (1·1) to each flask to contain one ml. of concentrated HCl per 25 ml. volume. Dilute to about 10 ml. with water, add 2 ml. of gelatin solution, 5 ml. of phenylfluorone solution, dilute to volume, mix well, and allow to stand for 30 minutes. Measure the absorbance of the solution versus the blank in 5-cm. cells at maximum absorbance which occurs near 535 mμ.

Prepare the absorbance-concentration graph by plotting the absorbance of the solution versus the zirconium concentration.

PREPARATION OF TITANIUM CALIBRATION GRAPH

Transfer 2-, 4-, 6-, 8-, and 10-ml. aliquots of the dilute standard titanium solution to 125-ml. separatory funnels. Add 150 mg. of solid sodium thiocyanate per ml. of solution. The resulting mixture is extracted for 5 minutes on a shaker with 5 ml. of the TOPO solution. A reference solution which contains the reagents but no titanium is similarly extracted to use as a blank. Draw off the aqueous phase and discard. Dry the funnel stem with a swab of filter paper. Place a glass wool plug in the stem of the separatory funnel and fill a 1-cm. cell with the organic solution. Measure the absorbance of the solution at maximum absorbance which occurs near 432 mμ versus the reference solution. Clean the separatory funnels with ethanol, water, nitric acid, and a thorough washing with water, in that order.

Prepare the absorbance-concentration graph by plotting the absorbance of the solutions versus the titanium concentration.

PROCEDURE

Carry a reagent blank through all steps of the procedure. To a sample containing 1 to 10 μg. of zirconium and/or 1 to 10 μg. of titanium in a large platinum dish, add HF and dropwise addition of HNO_3. Evaporate on a steam bath until almost dry. Add 10 ml. of HF, 1 ml. of formic acid, and evaporate until almost dry again (Notes 2 and 3). Add 50 ml. of the HCl-HF solution and warm gently to obtain a clear solution. Adjust the column to the proper acid condition by transferring 75 ml. of the HCl-HF solution to the column in small increments

UCCNHT0000271

(5 to 10 ml.) and drain the acid to 1 cm. above the resin bed. Discard the liquid which runs through. Place a clean 600-ml. polyethylene beaker under the column.

Cool the sample and transfer to the column in small increments (5 to 10 ml.). Wash the platinum dish 4 to 5 times with 5-ml. portions of the HCl-HF solution, transferring the washings to the column. Wash down the sides of the column several times using approximately 25 ml. of the HCl-HF solution. Drain to one ml. above the resin bed, collecting the eluate in the 600-ml. polyethylene beaker.

Keep the same beaker under the column and add 300 ml. of the HF-HCl solution at a flow rate of 100 to 125 ml. per hour. Allow the solution to drain to the top of the resin. The solution in the beaker contains the titanium and zirconium.

Clean up the column for the next sample by flowing 450 ml. of the niobium-tantalum eluant through the column at the same flow rate to remove the niobium and tantalum (Note 4).

Add 10 ml. of H_2SO_4 (1:1) to the solution containing the titanium and zirconium in the polyethylene beaker. Transfer the solution to a platinum dish and evaporate down to strong fumes of sulfuric acid. Any organic present is destroyed by dropwise addition of HNO_3 and by evaporation to strong fumes of sulfuric acid again. Cool, add 20 ml. of water, and mix well. Transfer the solution into a 100-ml. volumetric flask containing 50 ml. of HCl. Cool and dilute to volume with water.

To determine titanium, transfer an aliquot (up to 25 ml.) to a 125-ml. separatory funnel and proceed as outlined under Preparation of Titanium Calibration Graph. Measure the absorbance and determine the concentration of titanium by reference to the calibration graph.

To determine zirconium, transfer a 50-ml. aliquot to a 150-ml. beaker and evaporate to fumes of H_2SO_4. Cool, add 50 ml. of water, 5 ml. of H_2O_2 (30%) and about 10 ml. of an aluminum chloride solution (1 g./liter), and make just ammoniacal to pH paper. Heat this solution to boiling and filter through a 9-cm. Whatman No. 40 or equivalent filter paper, washing 10 times with hot NH_4Cl solution (20 g./liter) containing 5 ml. of H_2O_2 (30%) per 100 ml. of solution. Place the paper back in the beaker, add 50 ml. of HNO_3, 3 ml. of $HClO_4$, and 2 ml. of H_2SO_4 (1:1). Evaporate to fumes of $HClO_4$, cool, wash down the cover and beaker with water, and add 1 ml. of formic acid. Evaporate almost to dryness on the hot plate. (Less than 0.5 ml. of H_2SO_4 remains.) Cool, add 2 ml. of HCl solution (1:1) and 5 to 10 ml. of water, heat to dissolve salts, and cool. Transfer the solution to a 25-ml. volumetric flask and proceed as outlined under Preparation of Zirconium Calibration Graph, beginning with "Add two ml. of gelatin solution...." Measure the absorbance and determine the concentration of zirconium by reference to the calibration graph.

NOTES

1. This solution should be prepared with care. If the solution is too acid, tantalum will not be completely eluted in the volume specified. If the eluant is too alkaline, tantalum will precipitate in the column spoiling the determination being run and the one to follow.

UCCNHT0000272

2. If acid-insoluble zirconium, probably ZrO_2, is suspected of being present, the solution is evaporated to dryness at this point and the residue fused with potassium pyrosulfate. The melt is then dissolved in the HCl-HF mixture and the rest of the procedure is followed as outlined.

3. It is necessary that all traces of nitric acid are removed before passing the solution through the column. Formic acid decomposes the nitric acid.

4. Periodically the column must be repacked because of changes in the physical form of the column. Channeling occurs after frequent use and niobium begins to appear in the eluate. When this occurs, the resin should be removed from the column, reslurried, and returned to the column.

REFERENCE

Young, J. P., and White, J. C., "Extraction of Titanium Thiocyanate with Tri-n-Octylphosphine Oxide," Anal. Chem. 31, 393 (1959).

UCCNHT0000273

APPENDIX II - EMISSION SPECTROGRAPHIC METHODS FOR TRACE ELEMENTS IN NIOBIUM METAL

DETERMINATION OF ALUMINUM IN NIOBIUM METAL OR OXIDE (EMISSION SPECTROGRAPHIC METHOD)

SCOPE

This procedure is designed for the determination of 3 to 100 p.p.m. of aluminum in niobium metal or oxide.

PRINCIPLE OF METHOD

The oxide sample is mixed with graphite and analyzed using an AC arc, double cap mix technique.

APPARATUS

Any commercial spectrograph with a dispersion of 6A/mm. and a direct-current excitation source is believed suitable for the determination. This procedure refers to the equipment listed below.

Spectrographic Apparatus

3-meter grating spectrograph	Baird Model AD-1
Source unit	Baird Model AK-3
Densitometer	Baird Model CD
Boron carbide mortar	
Pelleting press with 1/8-inch die	

SPECIAL MATERIALS

Aluminum Standard Solutions (one mg./ml. and 0.02 mg./ml.) - Prepare a standard solution containing one mg./ml. of aluminum. Dissolve 0.500 g. of high-purity aluminum metal using a mixture of one part HCl, one part HNO_3, and four parts water, and dilute to 500 ml. Before use, dilute one ml. of this mixture to 50 ml. using high-purity redistilled water to make the 0.02 mg./ml. solution.

PROCEDURE

A. PREPARATION OF THE SAMPLE

Place the finely-divided metal in a platinum or silica flat dish, and heat in a muffle furnace for one hour at 700 to 800°C. Select a portion of the converted oxide and grind in a large boron carbide mortar to obtain a representative sample. Because of the abrasive qualities of Nb_2O_5 and the critical nature of the aluminum determination, all samples and standards are hand-ground, although power-driven facilities exist.

Grind equal weights (70 mg.) of representative oxide and SP-1 graphite pelleting powder in a small boron carbide mortar. High-purity 1/8-inch spectroscopic graphite rod is notched with a sharp knife and broken into 3/16-inch lengths.* A scoopful of the oxide-graphite mix (about 18 milligrams) is pelleted on the rough fractured end of the graphite rod. The capped electrode is inserted in the end of

*Actually 3/8-inch cut lengths are broken in half.

UCCNHT0000274

a length of 1/4-inch diameter graphite rod containing a slightly tapered 1/8-inch diameter hole.

For each arcing, two vertically opposed pellets are used. In aligning the electrode gap, provision is made for the cap mix to expand after the arc is started. A 3-mm. starting gap results in about a 2-mm. gap.

B. PREPARATION OF STANDARDS

A suitable source of low-aluminum Nb_2O_5 is salted using the aluminum standard solution. A 100-p.p.m. standard is prepared as follows. Two grams of oxide are placed in a small platinum fusion crucible and 0.2 ml. of one mg./ml. aluminum standard solution are pipetted onto the Nb_2O_5, care being taken to avoid wetting the sides of the platinum crucible. After the contents of the crucible have been dried on a sand bath or asbestos-covered hot plate, the crucible is heated in a muffle furnace for one-half hour at 800°C. The contents are then hand-ground in a large boron carbide mortar using a preliminary wet grind with acetone.

Standards of lower aluminum content are prepared by dilution of the 100-p.p.m. standard with Nb_2O_5. For example, 3 parts of Nb_2O_5 are dry-ground with one part of 100-p.p.m. standard to make the 25-p.p.m. standard. Alternately standards are also prepared by salting batches of Nb_2O_5 with the 0.02 mg./ml. standard solution.

When the working curves are plotted, a correction is made for the residual aluminum content using the method of straight line approximation.

SPECTROGRAPHIC CONDITIONS

Spectrograph	Baird 3-meter
Setting	First order 2600 to 4100 Å
Slit	25 micron
Lens	25-cm. focused on the grating
Grating	10-mm. exposure
Sector	Three step 1:2 ratio
Excitation	AC arc, 2700 volts and 4.5 amperes
Analytical gap	2-mm. while arcing
Upper electrode	Cap mix electrode
Lower electrode	Cap mix electrode
Exposure	25 seconds, no preburn
Emulsion	Spectrum Analysis #1
Development	3 minutes in D-19 at 70°F. ± 1°
Calibration	"Two Iron Line" method for 2500 to 3200 Å region. Step sector method for 3900 to 4000 Å region.

UCCNHT0000275

Lines used	Al 3961	1st, 2nd, or 3rd step - background corrected
	Nb 3970	Step 3, no background correction
	Al 3082	Step 2, background on high wave length
	Nb 3106.9	Step 3, no background

UCCNHT0000276

4. Polyethylene Water - 400-, 600-, and 1000-ml. beakers and bottles for preparing and dispensing acid mixtures.

REAGENTS

Hydrochloric-hydrofluoric Acid Solution - Add 250 ml. of HCl to 300 ml. of water, add 200 ml. of HF, and dilute to one liter with water.

Standard Ammonium Chloride Solution - Dissolve 240 g. of NH_4Cl in 800 ml. of water and dilute to one liter with water.

Titanium, Tin, Vanadium, and Zirconium Eluant - To 300 ml. of the ammonium chloride solution, add 200 ml. of HF and 125 ml. of HCl, and dilute to one liter with water.

Niobium and Tantalum Eluant - To 600 ml. of the ammonium chloride solution, add 40 ml. of HF. Adjust the pH to 5.5 to 6.5 with NH_4OH. (Approximately 80 to 85 ml. will be required). Dilute to one liter with water (Note 1).

SPECTROGRAPHIC APPARATUS

Any commercial spectrograph with a dispersion of 6 A./mm. and a direct-current excitation source is believed suitable for this determination. This procedure refers to the equipment listed below.

Spectrographic Apparatus

3-meter grating spectrograph	Baird Model AD-1
Source unit	Baird Model AK-3
Densitometer	Baird Model CB
Boron carbide hand mortar	

SPECIAL MATERIALS FOR SPECTROGRAPHIC ANALYSIS

Graphite Containing 1% GeO_2 and 0.25% $PdCl_2$ - Prepare by dry-grinding in a mechanical mortar a mixture of 900 mg. of high-purity SP-1 briquetting graphite and 100 mg. of $PdCl_2 \cdot 2H_2O$ (Fisher Scientific). In the same manner, prepare a 10% GeO_2 in graphite mixture. Dilute these and blend succeeding mixtures with graphite to make a concentration of 1% GeO_2 and 0.25% $PdCl_2$. At no time is a greater dilution than 1:9 employed.

PREPARATION OF EMISSION SPECTROGRAPHIC STANDARDS

Standards are prepared by dry-grinding oxides of the elements with suitably pure tantalum oxide. Often two or more sets of standards containing the same but different combinations of other elements are available for cross checking. Where chemical concentration techniques are employed, additional standards are prepared using similar chemical procedures. For example, oxides may be prepared from cupferron precipitates of salted solutions or may be derived from salted solutions carried through the entire concentration operation.

UCCNHT0000277

PROCEDURE

A. PREPARATION OF SAMPLE

Place the finely divided metal in a platinum or silica flat dish and heat in a muffle furnace for one hour at 700 to 800°C. Select a portion of the converted oxide and grind in the agate mortar to obtain a representative sample. Nb_2O_5 samples of chemical origin are also preground to obtain a representative sample. Two-hundred mg. of the representative sample are then ground with 30 mg. of gallium oxide containing 1% As_2O_3. Generally the small amount of gallium oxide is initially mixed with the Nb_2O_5 by hand in the mechanical mortar and then the power is turned on. The sample is ground for 15 to 20 minutes with frequent scraping down of the sides and pestle. A fine particle size is desirable for good precision and also to obtain similarity between coarse oxides obtained directly from metal and fine oxides of chemical origin.

Fifty mg. of the niobium oxide-gallium oxide mixture are weighed into a National electrode Type L4024. The mixture is loaded in three additions. A weighing glass with a 1/8-inch hole in the center or similarly shaped piece of metal containing a small hole in one end is helpful in loading the electrode. After each addition the electrode is held with forceps and tapped firmly and forcibly against the table top to ensure dense packing inside the electrode. The tapping operation cannot be overdone and should last for 30 seconds or more. When loaded, the electrode is inverted and the packed charge remains firmly in place. (A small speck of coarse grain is disregarded; also the air vent hole employed by some workers on U_3O_8 is not used.) Duplicate samples are normally employed in the analysis.

B. PREPARATION OF STANDARDS

A suitable source of low-boron Nb_2O_5 is salted using the boron standard solution. A 10-p.p.m. standard is prepared as follows: 2 grams of oxide are placed in a small platinum fusion crucible and 0.1 ml. of 0.2 mg./ml. boron standard solution is added to the oxide without wetting the sides of the dish. The platinum dish is gently dried on a sand bath or drying oven and then placed in a muffle furnace for one hour at 600°C. After cooling, the oxide is thoroughly ground and standards of lower boron content are prepared by dilution of the 10-p.p.m. standard with low-boron Nb_2O_5. Alternately other standards may also be prepared by the addition of suitable boron standard solutions.

When the working curves are plotted, a correction is made for the residual boron content using the method of straight line approximation.

SPECTROGRAPHIC CONDITIONS

Spectrograph	Baird 3-meter
Setting	First order (2200 - 3700 A.)
Slit	25 micron
Lens	25-cm. lens focused on the grating
Grating	30-mm. exposure
Sector	Seven step 1·2 ratio
Excitation	10-1/2 amperes direct-current during smooth part of burn

UCCNHT0000278

Analytical Gap	4 mm
Upper Electrode	1/8-inch high-purity graphite with tip sharpened to a 90-degree included angle
Lower Electrode	National L4024 and L4042 pedestal. The electrode is loaded as described under Sample Preparation The sample is the positive in the electrode circuit.
Exposure	Nominal exposure is 5 seconds preburn, 45 seconds exposure. This is performed manually for the start of the smooth or distillation burn occurs from 5 to 20 seconds after the start of the arc. Thirty seconds of smooth burn is desired and total exposure time may be increased for the occasional slow start
Emulsion	Spectrum Analysis #1
Development	3 minutes in D-19 at 70°C ± 1°
Calibration	"Two iron line" method
Lines Used	B 2497.7. Background taken on high wave length side. Reading normally taken on the third step of the sectored spectrum.
	As 2492.9. No background correction. Readings taken on the fourth step

REMARKS

The carrier distillation technique using gallium oxide does not work as well on Nb_2O_5 as it does with Ta_2O_5 and U_3O_8 The use of arsenic as an internal standard is helpful and works well most of the time. Occasionally, for reasons unknown, the arsenic will not show in the spectrum or will be very weak. In such cases it is necessary to calculate the results using an assumed value for the density of the arsenic line based on the average density of the line in the standards and other samples for that particular plate.

UCCNHT0000279

DETERMINATION OF CALCIUM AND MAGNESIUM IN NIOBIUM METAL OR OXIDE (EMISSION SPECTROGRAPHIC METHOD)

SCOPE

This procedure is designed for the determination of from 0 003 to 0.1% MgO or CaO in Nb_2O_5.

PRINCIPLE OF METHOD

The oxide sample is mixed with graphite and analyzed using a high-voltage AC spark and a cap mix technique.

APPARATUS

Any commercial spectrograph with a dispersion of 6A/mm. and a direct-current excitation source is believed suitable for the determination. This procedure refers to the equipment listed below.

Spectrographic Apparatus

3-meter grating spectrograph	Baird Model AD-1
Source unit	Baird Model AK-3
Densitometer	Baird Model CD
Boron carbide mortar	
Pelleting press with 1/8-inch die	

PROCEDURE

A. PREPARATION OF THE SAMPLE

Place the finely-divided metal in a platinum or silica flat dish, and heat in a muffle furnace for one hour at 700 to 800°C. Select a portion of the converted oxide and grind in a large boron carbide mortar to obtain a representative sample. Samples of Nb_2O_5 of chemical origin should also be ground to ensure a representative sample.

Grind equal weights (70 mg.) of representative oxide and SP-1 graphite pelleting powder in a small boron carbide mortar. High-purity 1/8-inch spectroscopic graphite rod is notched with a sharp knife and broken into 3/16-inch lengths.* A scoopful of the oxide-graphite mix (about 18 milligrams) is pelleted on the rough fractured end of the graphite rod. The capped electrode is inserted in the end of a length of 1/4-inch diameter graphite rod containing a slightly tapered 1/8-inch diameter hole.

A 1/2-inch length of high-purity 1/8-inch diameter rod with a flat end is inserted in a piece of 1/4-inch rod and used as the counter electrode.

*Actually 3/8-inch cut lengths are broken in half.

UCCNHT0000280

B. PREPARATION OF STANDARDS

Suitable oxides of low calcium and magnesium content are dry-ground with pure CaO and MgO. Alternately standards may also be prepared by salting with appropriate calcium and magnesium standard solutions. A boron carbide mortar is used for the dry-grinding operation.

SPECTROGRAPHIC CONDITIONS

Spectrograph	Baird 3-meter
Setting	First order 2600 to 4100 Å
Slit	25-micron
Lens	25-cm. focused on grating
Sector	3 step 1:2 ratio
Grating	10-mm. exposure
Excitation	AC spark, 40-kilovolt setting, 0.00125 μF capacitance, 6 mH added inductance, 360 mH in parallel; 4 RF amperes, 3-ampere primary current. 10 to 12 breaks per half cycle.
Upper electrode	1/8-inch diameter, high-purity graphite with flat end
Lower electrode	Cap mix electrode
Exposure	5-second preburn, 10-second exposure
Development	3 minutes in D-19 at 70°F. ± 1°
Calibration	"Two Iron Line" method for 2500 to 3200 Å region. Step sector method for 3900 to 4000 Å region.
Line pairs used	For Nb_2O_5: Mg 2795 / Nb 2816.67 — Steps 1 and 2; Step 2
	Ca 3933 / Nb 3952.3 — Steps 1 and 2; Step 2
	Ca 3968 / Nb 3952.3 — Steps 1 and 2; Step 2

UCCNHT0000281

DETERMINATION OF TRACE ELEMENTS IN NIOBIUM METAL OR OXIDE (ALUMINUM, LITHIUM, SILICON, TIN, TITANIUM, AND ZIRCONIUM) (DIRECT EMISSION SPECTROGRAPHIC METHOD)

SCOPE

This procedure is designed for the direct determination of the elements listed below in niobium metal or oxide. Additional elements may be determined by the same procedure with the exception of strong carbide formers such as tungsten and molybdenum. Chemical concentration techniques such as ion exchange must be used in conjunction with this method for the determination of lower concentrations of tin, titanium, and zirconium.

Elements Determined

Element	Range in Per Cent
Silicon	0.0002* - 0.1
Aluminum**	0.003 - 0.1
Tin	0.003 - 0.1
Titanium	0.002 - 0.1
Zirconium	0.007 - 0.1
Lithium	0.0003 - 0.003

*Modification described in procedure for silicon below 0.005%.
**Refer to method for low concentrations of aluminum (3 to 100 p.p.m.) in niobium metal and oxide.

PRINCIPLE OF METHOD

Niobium metal is converted to oxide in a muffle furnace and the graphite-oxide mixture excited in a direct-current arc.

APPARATUS

Any commercial spectrograph with a dispersion of 6 A./mm. and a direct-current excitation source is believed suitable for this determination. This write-up refers to the equipment listed below.

Spectrographic Apparatus

3-meter grating spectrograph	Baird Model AD-1
Source unit	Baird Model AK-3
Densitometer	Baird Model CB
Boron carbide mechanical mortar	
Boron carbide hand mortar	

SPECIAL MATERIALS

Graphite Containing 1% GeO_2 and 0.25% $PdCl_2$ - Prepare by dry-grinding in a mechanical mortar a mixture of 900 mg. of high-purity SP-1 briquetting graphite and 100 mg. of $PdCl_2 \cdot 2H_2O$ (Fisher Scientific). In the same manner, prepare a

UCCNHT0000282

10% GeO_2 in graphite mixture. Dilute these and blend succeeding mixtures with graphite to make a concentration of 1% GeO_2 and 0 25% $PdCl_2$. At no time is a greater dilution than 1:9 employed.

PROCEDURE

A. PREPARATION OF SAMPLE

Place finely divided metal in a platinum or silica dish and heat in a muffle furnace for one hour at 700°C With coarse material, the use of oxygen during the furnace treatment is often helpful. The converted oxide should be ground in a boron carbide mortar or other device to ensure a representative sample. Because of the abrasive qualities of niobium oxide, careful selection of the grinding device and its operation is required in order to minimize contamination. Oxide samples of chemical origin should also be ground to ensure a representative sample.

Select a portion of the ground oxide and mix with one part by weight of graphite containing 1% GeO_2 and 0.25% $PdCl_2$ in a small hand boron carbide mortar The electrodes are loaded with the graphite mix and the upper surface scraped flush with the blade edge of the spatula. The sample is excited under the conditions described.

For the determination of silicon in niobium of the highest purity (<50 p.p.m. of silicon), the graphite containing 1% GeO_2 and 0.25% $PdCl_2$ is omitted and plain graphite only used. This is because of the difficulty of preparing the internal standard mixture absolutely free of silicon. Also, for the lithium determination, only plain graphite is used.

Samples for the lithium determination are prepared by a different method. One gram of niobium metal is dissolved in hydrofluoric and nitric acids. When all the metal is dissolved, sulfuric acid is added and the solution brought to fumes. As much of the sulfuric acid as possible is evaporated on the hot plate before placing in a muffle The temperature is gradually raised to 700 to 800°C. and baked for one-half hour. Afterward it is cooled, ground, and mixed with graphite as previously described.

B. PREPARATION OF STANDARDS

Standards are prepared by dry-grinding oxides of the elements with suitably pure niobium oxide. Often two or more sets of standards containing the same, but different combinations of other elements are available for cross checking Alternately, standards for selected elements may be prepared by using chemical precipitation techniques These may consist of oxide made from ammonia or cupferron precipitates of salted solutions

Except for lithium, there was no difference detected between chemically-prepared oxides and those prepared by air oxidation of the metal.

Standards for lithium were prepared by adding appropriate amounts of lithium standard solution (prepared by dissolving lithium carbonate in dilute nitric acid) to a $HF-HNO_3$ solution of lithium-free niobium metal as described under Preparation of Samples.

UCCNHT0000283

SPECTROGRAPHIC CONDITIONS

(All elements except lithium)

Spectrograph	Baird 3-meter
Setting	First order (2200 to 3700 Å)
Slit	25 micron
Lens	25-cm. focused on grating
Grating	3-mm. exposed, increase to 5 mm. for trace silicon determination
Sector	Two-step sector adjusted for full and 1/4 exposure
Excitation	10-1/2 amperes, direct-current, sample positive
Analytical gap	4 mm.
Upper electrode	1/8-inch high-purity graphite with the tip sharpened to a 90-degree included angle
Lower electrode	

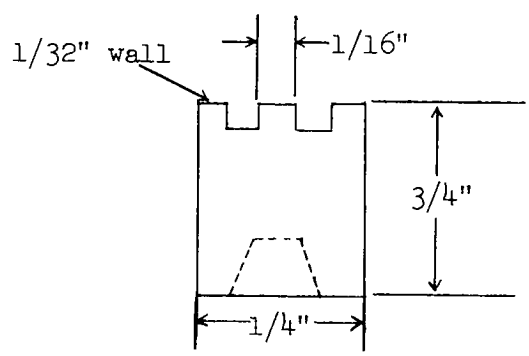

Exposure	Thirty seconds, no preburn
Development	3 minutes in D-19 at 70°F ± 1°
Emulsion	Spectrum Analysis #1
Calibration	"Two Iron Line" method
Line pairs used	Elements in Nb_2O_5

Silicon·	Si 2528 / Ge 2533.3	Full sector, BG* high side 1/4 sector
	Si 2528 / Ge 2533.3	1/4 sector 1/4 sector
	Si 2516** / D = 50	Full sector, BG high side
	Si 2528** / D = 50	Full sector, BG high side

*This means background correction taken on higher wave length side of line.
**Used for very low silicon determination.

UCCNHT0000284

Line pairs used (cont.)	Elements in Nb_2O_5		
	Aluminum:	Al 3082 / Pd 3258	Full sector, BG high side
	Tin:	Sn 3175 / Ge 2533	Full sector, BG low side 1/4 sector
		Sn 2429 / Ge 2533	Full sector, BG high side 1/4 sector
	Titanium.	Ti 3078 / Pd 3258	Full sector, BG high side 1/4 sector
		Ti 3078 / Pd 3258	1/4 sector 1/4 sector
		Ti 3106.234 / Pd 3258	1/4 sector 1/4 sector
	Zirconium:	Zr 3391.8 / Pd 3258	Full sector, BG low side 1/4 sector

SPECTROGRAPHIC CONDITIONS FOR LITHIUM

Spectrograph	Baird 3-meter
Setting	First order (5300 to 6800 Å)
Slit	50 micron
Lens	25-cm. focused on grating
Sector	3-step, 1:2 ratio
Grating	30-mm. exposed
Excitation	6 amperes, direct-current, sample positive
Analytical gap	4 mm.
Upper and lower electrode:	Same as regular method
Exposure	Twenty seconds, no preburn
Emulsion	Eastman Kodak, IN
Development	3 minutes in D-19 at 70°F. ± 1°
Calibration	Step sector at 6000 Å.
Line pairs used	Li 6707.8 / Background

The lithium line is densitometered in the second step of the three-step spectra. The background is read on the same step on the higher wave length side of the line. The ratio of the net intensity of the lithium line corrected for background to the intensity of the background is plotted versus concentration.

UCCNHT0000285

DETERMINATION OF ZIRCONIUM, TITANIUM, VANADIUM, AND TIN IN NIOBIUM (ION EXCHANGE SEPARATION-EMISSION SPECTROGRAPHIC METHOD)

SCOPE

This procedure is designed for the determination of zirconium, titanium, vanadium, and tin in the range of 0.5 to 20 p.p.m.

PRINCIPLE OF METHOD

The zirconium, titanium, vanadium, and tin are separated from niobium on an ion exchange column containing Dowex 1 resin. The oxides are precipitated with cupferron using high-purity tantalum as a carrier. They are then determined emission spectrographically by excitation in a direct-current arc. Tungsten and molybdenum cannot be determined by this method.

CONCENTRATION RANGE

The following elements collected in a tantalum oxide matrix have the sensitivity as listed. However, since a 5.0-gram sample of niobium is taken and the elements concentrated into 0.1 gram of Ta_2O_5 for the spectrographic determination, the sensitivity is actually 1/50 of that tabulated.

Element	Range (%) in Ta_2O_5 Matrix
Tin	0.002 - 0.1
Titanium	0.002 - 1.0
Vanadium	0.002 - 0.1
Zirconium	0.002 - 0.5

SPECIAL APPARATUS

1 The columns are constructed of polystyrene and are approximately 18 inches long and one inch I.D. The bottom of the tube is closed by a waxed No. 5 rubber stopper with a 3/16-inch hole. A 6-inch length of polystyrene tubing with a 3/16-inch O.D. is inserted in the hole. A 3-inch length of Tygon tubing is attached and the flow controlled by a hose cock on the Tygon tubing.

2. The resin is Dowex 1, 200 to 400 mesh, 8 to 10% divinylbenzene cross-linkage. Prepare a suspension of the resin in dilute HCl (1:19). Allow the coarser fraction to settle 10 to 15 minutes and remove the fines by decantation. Repeat the process about 7 to 8 times until most of the fine material is removed from the suspension.

3. The bottom of the ion exchange is covered with a 1/4- to 3/8-inch layer of acid-resistant vinyl chloride plastic wool (Dynel). Add the suspension of resin in one addition. Sufficient resin should be present to form a settled column 12 inches high. The loaded column should be run through several cycles of alternate elution with HCl (3 1) and HCl (1 9) to remove the fines. The column is then washed with HCl (1:3) and is ready for use. At no time should the column be allowed to run dry. The flow rate should be about 100 to 125 ml. per hour

UCCNHT0000286

4. Polyethylene Water - 400-, 600-, and 1000-ml. beakers and bottles for preparing and dispensing acid mixtures.

REAGENTS

Hydrochloric-hydrofluoric Acid Solution - Add 250 ml. of HCl to 300 ml. of water, add 200 ml. of HF, and dilute to one liter with water.

Standard Ammonium Chloride Solution - Dissolve 240 g. of NH_4Cl in 800 ml. of water and dilute to one liter with water.

Titanium, Tin, Vanadium, and Zirconium Eluant - To 300 ml. of the ammonium chloride solution, add 200 ml. of HF and 125 ml. of HCl, and dilute to one liter with water.

Niobium and Tantalum Eluant - To 600 ml. of the ammonium chloride solution, add 40 ml. of HF. Adjust the pH to 5.5 to 6 5 with NH_4OH. (Approximately 80 to 85 ml. will be required). Dilute to one liter with water (Note 1).

SPECTROGRAPHIC APPARATUS

Any commercial spectrograph with a dispersion of 6 A./mm. and a direct-current excitation source is believed suitable for this determination This procedure refers to the equipment listed below.

Spectrographic Apparatus

3-meter grating spectrograph	Baird Model AD-1
Source unit	Baird Model AK-3
Densitometer	Baird Model CB
Boron carbide hand mortar	

SPECIAL MATERIALS FOR SPECTROGRAPHIC ANALYSIS

Graphite Containing 1% GeO_2 and 0.25% $PdCl_2$ - Prepare by dry-grinding in a mechanical mortar a mixture of 900 mg. of high-purity SP-1 briquetting graphite and 100 mg. of $PdCl_2 \cdot 2H_2O$ (Fisher Scientific). In the same manner, prepare a 10% GeO_2 in graphite mixture. Dilute these and blend succeeding mixtures with graphite to make a concentration of 1% GeO_2 and 0.25% $PdCl_2$. At no time is a greater dilution than 1:9 employed.

PREPARATION OF EMISSION SPECTROGRAPHIC STANDARDS

Standards are prepared by dry-grinding oxides of the elements with suitably pure tantalum oxide Often two or more sets of standards containing the same but different combinations of other elements are available for cross checking. Where chemical concentration techniques are employed, additional standards are prepared using similar chemical procedures. For example, oxides may be prepared from cupferron precipitates of salted solutions or may be derived from salted solutions carried through the entire concentration operation.

UCCNHT0000287

It is desirable to prepare standards as per cent element in the oxide. Thus, if the residual elements in a 5-gram sample of niobium metal are collected in a Ta_2O_5 precipitate of 0.1 gram, the original concentration is 1/50 of that in the precipitate, and results read from the working curves are multiplied by this fraction.

SPECTROGRAPHIC CONDITIONS

Spectrograph	Baird 3-meter
Setting	First order (2200 to 3700 Å)
Slit	25-micron
Lens	25-cm. focused on grating
Grating	3-mm. exposed
Sector	2 step sector adjusted for full and 1/4 exposure
Excitation	10-1/2 amperes, direct-current sample positive
Analytical gap	4-mm.
Upper electrode	1/8-inch high-purity graphite with the tip sharpened to a 90-degree included angle
Lower electrode	

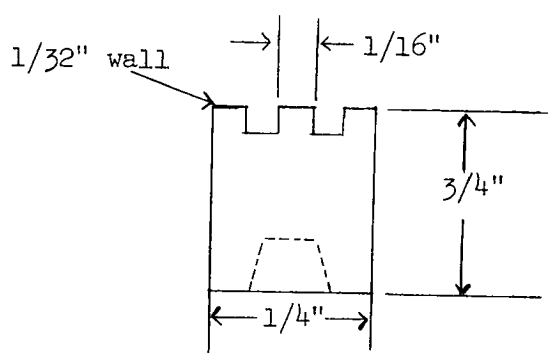

UCCNHT0000288

Exposure	Thirty seconds, no preburn
Development	3 minutes in D-19 at 70°F. ± 1°
Emulsion	Spectrum Analysis No. 1
Calibration	"Two iron line" method
Line pairs used	Elements in Ta_2O_5

Sn 3175 / Ge 2533	Full sector B.G.* low side / 1/4 sector
Sn 3009 / Ge 2533	Full sector B G. low side / 1/4 sector
Ti 3239.0 / Pd 3258	Full sector B.G. high side / 1/4 sector
Ti 3078.6 / Pd 3258	Full sector B.G. high side / 1/4 sector
Ti 3202.5 / Pd 3258	Full sector B.G. high side / 1/4 sector
Ti 3202.5 / Pd 3258	1/4 sector / 1/4 sector
Zr 3391.9 / Pd 3258	Full sector B.G. high side / 1/4 sector
V 3183.9 / Pd 3258	Full sector B.G. low side / 1/4 sector
V 3183.4 / Pd 3258	Full sector B.G. low side / 1/4 sector

PROCEDURE

Transfer 5.00 g. of the sample to a 300-ml. platinum casserole. Add 25 to 50 ml. of hydrofluoric acid, cover with a platinum or Teflon cover, and add nitric acid dropwise until the sample is dissolved. Evaporate on a steam bath until almost dry. Add 10 ml. of hydrofluoric acid, 1 ml. of formic acid, and evaporate again until almost dry (Note 2). Add 100 ml. of the hydrofluoric-hydrochloric acid solution and warm gently to obtain a clear solution.

*This means that the background reading is taken on lower wave length side of the tin line.

UCCNHT0000289

Transfer 50 ml. of the hydrochloric-hydrofluoric acid solution to the column in small increments (5 to 10 ml.) and drain the acid to 1 cm. above the resin bed. Place a 600-ml. polyethylene beaker under the column.

Cool the sample and transfer to the column in small increments (5 to 10 ml.). Wash the platinum dish 4 to 5 times with 5-ml. portions of the hydrochloric-hydrofluoric solution, transferring the washings to the column. Wash down the sides of the column several times using approximately 50 ml. of the hydrochloric acid-hydrofluoric acid solution. Drain to 1 ml. above the resin bed and catch the eluate in the 600-ml. polyethylene beaker.

Keep the same beaker under the column and add 300 ml. of the titanium eluant at a flow rate of 100 to 125 ml. per hour. Allow the solution to drain to the top of the resin and wash the sides of the column five times with 5-ml. portions of the niobium eluant, allowing the solution to drain to the top of the column each time. Save for the determination of titanium. It contains the titanium, iron, vanadium, tin, zirconium, etc. The column is cleaned by the addition of 400 ml. of the niobium-tantalum eluant followed by 50 ml. of HCl (1.3) and is then ready for the next sample (note 3).

Transfer 40 g. of boric acid to a 1500-ml. beaker, add 700 ml. of water, and warm to dissolve the acid. Transfer 0.100 g. of high-purity tantalum metal to a 50-ml. platinum dish and add 3 ml. of hydrofluoric acid and nitric acid dropwise until the metal is all in solution. Evaporate to a low volume. Transfer the tantalum solution to the eluate reserved in the polyethylene beaker. Transfer the eluate to the boric acid solution. Cool to 5°C. and add, with stirring, 100 to 125 ml. of the cupferron solution for a complete precipitation. Add paper pulp, stir the solution and allow the precipitate to settle for 10 minutes. Filter on a Büchner funnel and wash with about 400 ml. of the cupferron wash solution. Transfer to a platinum dish and ignite at a low temperature and then at about 500 to 600°C. until all the carbon is burned off Ignite finally at 900°C. for one hour. Cool, place in a desiccator and reserve for the determination of the elements by emission spectroscopy.

The ignited oxide from the ion-exchange procedure is weighed to determine the concentration factor (original sample weight/weight of oxide). The oxide is then ground in a hand boron carbide mortar to ensure a representative sample. A portion of the ground oxide is then mixed with an equal weight of graphite containing 1% GeO_2 and 0.25% $PdCl_2$ in a boron carbide hand mortar. The electrodes are loaded with the graphite mix and the upper surface scraped flush with the blade edge of the spatula. The electrode is placed in the spectrograph and the sample excited under the conditions described. Calculate the concentration of elements present in the Ta_2O_5 oxide concentrate by reference to the appropriate calibration graph. Determine the concentration of elements in the original sample by dividing by the concentration factor.

NOTES

1. This solution should be prepared with care. If the solution is too acid, tantalum will not be completely eluted in the volume specified. If the eluant is too alkaline, tantalum will precipitate in the column spoiling the determination being run and the one to follow.

UCCNHT0000290

2. The nitric acid must be removed, otherwise, the niobium will not be completely retained on the column. Some of the niobium will end up with the oxide to be analyzed and will interfere with the spectrographic determination.

3. Periodically the columns must be repacked because of a change in the physical form of the column. After several weeks of use, channeling occurs and niobium begins to pass through into the eluate. When this occurs, the resin should be removed from the column, reslurried, and returned to the column.

UCCNHT0000291

APPENDIX III - MISCELLANEOUS ANALYTICAL METHODS

DETERMINATION OF LOW CARBON IN NIOBIUM METAL

SCOPE

This procedure is suitable for the determination of carbon in low amounts (p.p.m.) in niobium metal.

PRINCIPLE OF METHOD

The method involves combustion of the sample in the presence of an accelerator in a stream of purified oxygen. The oxygen containing the carbon dioxide is passed through a conductometric apparatus for measurement of the carbon dioxide.

APPARATUS

a. Burrell two-tube Globar furnace equipped with two 1-inch (I.D.) x 27-inch McDanel tubes and a platinum, platinum-rhodium thermocouple. One tube is operated with open ends for free access of air for prefiring boats. The inlet and outlet glass tubes for the oxygen in the sample tube are flared to serve as radiation shields for the rubber stoppers.

b. Leco Conductometric Unit Model 515

c. Oxygen purification system consisting of copper oxide furnace operating at 350°C., Ascarite - magnesium perchlorate tower, surge tank and pressure control valve. The surge tank is incorporated to ensure a flow of oxygen through the tube even at the height of the burn.

d. Leco No. 5 boats

e. MnO_2 tower between the furnace and conductometric apparatus (Leco or Fisher special MnO_2)

REAGENTS

a. 30-mesh tin

b. Barium hydroxide solution according to Leco instructions

PROCEDURE

a. Raise the temperature of the furnace to 1425 to 1450°C. (as measured in the external thermowell) and the conductometric apparatus and solution to temperature.

b. Prefire a boat in the auxiliary tube for at least five minutes. Remove the boat and cool (while covered) on a clean metal plate to < 200°C.

c. Transfer 2.0 g. of the tin shot to the boat and insert in the hot zone of the furnace. (The tin can be measured volumetrically with sufficient accuracy.)

UCCNHT0000292

d. Start the oxygen flow through the furnace and adjust to 325 to 330 ml. per minute and null the conductometric apparatus. This must be done within 30 seconds after insertion of the sample.

e. After 10 minutes, balance the bridge, record the resistance, drain, and replace with fresh $Ba(OH)_2$ solution.

f. Repeat steps b and c until a consistent blank is obtained.

g. To prepare a calibration curve, transfer 0.500 g. of a suitable standard (0.02 to 0.07% carbon) to a prefired boat, cover with 2.0 g. of tin, and repeat steps c to e. Repeat until consistent values are obtained on the standard. Carry out this procedure with other standards in this range or by burning fractional weights of a single standard.

h. Plot the resistance change of the blank and standards versus per cent carbon on linear graph paper.

i. Transfer 0.500 g. of the sample (1.00 g. for < 0.015% carbon) to a prefired boat and repeat steps c to e.

j. Determine the per cent carbon from the calibration curve.

There may be a small but consistent curve shift during a day's operation. A standard and blank should be checked at the beginning, middle, and end of an 8-hour day.

The balancing of the bridge after insertion of the sample is permissible since the CO_2 from the combustion does not reach the conductance bridge until about 90 seconds have elapsed.

The use of ceramic pedestals (5/8 x 4-1/4 inch) under the boats will protect the tube. These must also be prefired but can be used repeatedly. (Available from the McDanel Company).

UCCNHT0000293

DETERMINATION OF NITROGEN IN NIOBIUM METAL
(DISTILLATION - TITRIMETRIC METHOD)

SCOPE

This method is applicable to niobium metal containing more than 0.005% nitrogen.

PRINCIPLE OF METHOD

The sample is dissolved in HF plus H_2O_2, thus converting the nitrides to the ammonium salt. The ammonium is steam distilled out of the alkaline solution into boric solution and titrated with standard acid.

SPECIAL APPARATUS

Micro-Kjeldahl apparatus as described in Analytical Chemistry 23, 523 (1951) except the digestion flask has a volume of 150 ml.

SPECIAL SOLUTIONS

NaOH Solution - Dissolve 400 g. of NaOH in one liter of water.

Boric Acid Solution - Dissolve 20 g. of H_3BO_3 in one liter of hot distilled water and cool.

Mixed Indicator - Dissolve 0.10 g. of bromcresol green in 10 ml. of methanol and 0.02 g. of methyl red in another 10-ml. portion of methanol. Dilute the two solutions to 50 ml. each with methanol and combine.

0.00714N H_2SO_4- This is standardized against 0.01N NaOH which has been freshly standardized against N.B.S. 84 potassium acid phthalate.

PROCEDURE

Solution of Sample

Transfer 1.00 g. of the sample (millings or drillings) to a 100-ml. platinum dish, add 5 ml. of HF and 15 drops of H_2O_2 (30%). Heat carefully, supplying just enough heat to keep the reaction going. When dissolution is complete, add 150 mg. of H_3BO_3 and digest until the solution is clear.

Run a blank on all the reagents. Since the water contains small amounts of nitrogen, the amount of water used for dilution and washing should be measured so that the blank will be comparable to the sample.

Cool and transfer the solution of the sample to the digestion flask of the microdistillation apparatus. The outlet tube of the condenser should dip into 5 ml. of the boric acid solution containing 5 drops of the mixed indicator in a 125-ml. Erlenmeyer flask. Add 30 ml. of the NaOH solution to the digestion flask

UCCNHT0000294

and admit steam. The distillation is complete three minutes after the first condensate appears. Drop the Erlenmeyer flask until the outlet tube is approximately one centimeter above the surface of the solution. Continue the distillation for one minute more.

Titrate the boric acid solution with the standardized H_2SO_4 solution using a 5-ml. buret.

$$\% \text{ Nitrogen} = (A - B)\ (0.01)$$

where A = ml. of 0.00714N H_2SO_4 used for sample
B = ml. of 0.00714N H_2SO_4 used for blank

UCCNHT0000295

DETERMINATION OF NITROGEN IN NIOBIUM METAL
(DISTILLATION - SPECTROPHOTOMETRIC METHOD)

SCOPE

This method is designed for the determination of from 0.0001 (1 p.p.m.) to 0 02% nitrogen in niobium.

PRINCIPLE OF METHOD

The sample of niobium is dissolved in HF and H_2O_2. The solution is made basic with sodium hydroxide and the ammonia steam-distilled into a buffered solution. Chloramine-T solution and pyridine-pyrazolone reagent are added to the buffered solution and the colored complex containing the ammonia is extracted with carbon tetrachloride and measured colorimetrically at 450 mμ.

CONCENTRATION RANGE

The range of the colored system using a 1-cm. cell is from 0 01 to 0.1 mg. of nitrogen in 50 ml. of solution. The system follows Beer's Law up to an absorbance of 1.0, but deviates slightly at higher absorbance values.

The range of the colored system using a 5-cm. cell is from 0.002 to 0.02 mg. of nitrogen in 50 ml. of solution.

SPECIAL SOLUTIONS

Ammonia-Free Water - Slowly pass distilled water through Dowex 50 ion exchange resin.

Buffer - Transfer 13.6 g. of sodium acetate and 61.5 ml. of glacial acetic acid in a one-liter volumetric flask and dilute to the mark with ammonia-free water. The pH of the buffer should be between 3.2 and 3.8.

Chloramine-T - Dissolve 0.6 g. in 22 ml. of ammonia-free water. Prepare fresh before use. Store the solid reagent in a dark place. The solid reagent sometimes deteriorates upon standing and after a year it may lose its effectiveness as a reagent.

Pyrazolone - Dissolve 0.63 g. of 3-methyl-1-phenyl-5-pyrazolone (Eastman Organic Chemicals 1397), recrystallized from alcohol, in 250 ml. of ammonia-free water by heating to 75°C. and allowing to cool.

3,3'-Dimethyl-1,1'-Diphenyl-(4,4'-bi-2-pyrazoline)-5,5'-dione /bispyrazolone/ - Eastman Organic Chemicals 6969 - To prepare this solution for the composite pyridine-pyrazolone reagent, dissolve 0.050 gram of bispyrazolone in 50 ml. of pyridine by allowing to stand 45 minutes. This solution is not stable and should be made just prior to use.

Pyridine-Pyrazolone Reagent - Mix 250 ml. of the pyrazolone solution with 50 ml. of the freshly prepared bispyrazolone-pyridine solution. This reagent should be prepared not more than 15 minutes prior to use.

UCCNHT0000296

Sodium Hydroxide Solution - Add 500 ml. of ammonia-free water to 500 g. of NaOH pellets. Boil with 2 grams of Devarda's alloy for 10 minutes. The solution does not need to be filtered from the alloy.

Standard Solution of Ammonium Sulfate - Dissolve 0.2358 g. of $(NH_4)_2SO_4$ in approximately 500 ml. of ammonia-free water and dilute to one liter. This stock solution contains 0.05 mg. of nitrogen per ml. Transfer 25 ml. of the stock solution to a 250-ml. volumetric flask and dilute to the mark with ammonia-free water to make a solution containing 0.005 mg. of nitrogen per ml.

SPECIAL APPARATUS

The apparatus used for the distillation of the ammonia corresponded to the Kjeldahl semi-microapparatus, Fisher Catalog No. 59, Part No. 21-101, with the modification of replacing the vacuum jacket with a 300-ml. Kjeldahl flask adapted with a 24/42 ground glass connection. Of special importance is the use of the silver condenser, Fisher Catalog No. 94, Part No. 21-110.

PREPARATION OF CALIBRATION GRAPH

Transfer 2, 5, 10, 15, and 20 ml. portions of the dilute standard ammonium sulfate solution (0.005 g. of nitrogen per ml.) to 125-ml. Erlenmeyer flask. Add 10 ml. of the buffer solution to each flask and to a flask containing no ammonium sulfate to be carried through the procedure as a blank on the reagents. Add water to each flask to bring the total volume of the solution to about 50 ml. Add 1.0 ml. of the Chloramine-T solution from a buret and mix. After 90 seconds, add 30 ml. of pyridine-pyrazolone reagent and mix. A pink color indicates the presence of ammonia. Allow to stand for at least two minutes (but not more than 15 minutes). Transfer the solution to a 250-ml. separatory funnel. Extract twice with 15-ml. portions of carbon tetrachloride. Collect the CCl_4 layers in a 50-ml. flask and dilute to the mark with ethanol and mix. Measure the absorbance at 450 mμ in a spectrophotometer with a 1-cm. cell using the blank as null. Plot absorbance versus concentration.

If very low nitrogen concentrations (< 0.01 mg.) are to be measured, 5-cm. cells should be used instead of 1-cm. cells.

PROCEDURE

Transfer 1.00 g. of the 100-mesh sample containing from 1 to 100 micrograms of nitrogen to a 100-ml. platinum dish, add 5 ml. of HF and 15 drops of H_2O_2 (30%). Heat carefully, supplying just enough heat to keep the reaction going. When dissolution is complete, add 150 mg. of H_3BO_3 and digest until the solution is clear.

Determine a blank on all the reagents.

Cool and transfer the solution of the sample to the digestion flask of the microdistillation apparatus.

UCCNHT0000297

DISTILLATION OF AMMONIA AND DEVELOPMENT OF COLOR

Wash down the sides of the flask with 100 ml. of water and cool. Place 10 ml. of the buffer solution in the distillate trap. Attach the flask to the apparatus by means of a ball joint tension clamp. Carefully add 40 ml. of 50% sodium hydroxide and steam distill, collecting 40 ml. of distillate. Develop the color as described in the Preparation of Calibration Graph.

REFERENCES

1. Kruse, J. M., and Mellon, M. G., Anal. Chem. 25, 1188 (1953)

2. Lear, J. B., and Mellon, M. G., Anal. Chem. 29, 293 (1957)

UCCNHT0000298

DETERMINATION OF OXYGEN AND HYDROGEN IN NIOBIUM METAL (MICRO VACUUM-FUSION METHOD USING PLATINUM FLUX TECHNIQUE)

SCOPE

This method is suitable for the determination of oxygen and hydrogen in niobium metal and related alloys in the 0 to 500 p.p.m. range. (See Note 1)

PRINCIPLE OF METHOD

This method is based on fusion of the sample with platinum in a graphite crucible in a high-frequency vacuum furnace. Thus, the oxide is reduced by the carbon, and the oxygen is evolved as CO. Under the conditions of the high temperature and the high vacuum, nitrides are decomposed and N_2 liberated. Likewise, hydrogen is extracted from the sample as H_2. This mixture of CO, H_2, and N_2 is collected in a constant, calibrated volume, and the percentages of the three determined by differential pressure measurements.

APPARATUS

Basically, the apparatus consists of a high-frequency furnace built around a quartz tube, three glass mercury diffusion pumps and accessory glassware for collecting and analyzing the gas together with suitable backing-up pumps for out-gassing the system. A view of the apparatus is shown in Figure 1. Similar apparatus and methods have been described in the literature (1, 2, 3, 4).

Power Supply - A 15-kw. Tocco motor generator is used as a source of high-frequency power.

Furnace - The graphite crucible is heated by nine turns of double 1/4-inch water-cooled copper tubing wound as closely as possible around the quartz tube but not touching it. This serves as the primary and carries the high-frequency current from the motor generator. The vertical silica tube extends through the copper coil and rests on a pedestal. The standard tube is 18 by 2-7/8 inches O.D. by 2-3/8 inches I.D., made with a round bottom with an integral closure. The top is closed with a brass head attached with deKhotinsky cement. Samples are introduced into the furnace through a turret cap which fits on this head and is sealed with a 1/8- x 3-inch "O" ring and tightened with thumb screws. The glass tubes are approximately 8 inches long and are cemented in the turret nipples with deKhotinsky cement. Samples are placed in the glass tubes and dropped into the furnace by means of a brass-tipped ferritic stainless steel pusher manipulated with an Alnico magnet.

Crucible - The crucible is machined of high-purity graphite (Note 2). The samples are guided into the crucible with a graphite funnel. The arrangement of the crucible, thimble, etc., in the furnace is as follows

A 2- x 6-1/2-inch clear quartz thimble with two 1/8-inch holes near the top and opposite each other for lowering it into place is prepared.

200 M x D graphite is placed in the quartz thimble to a depth of approximately 4-1/2 to 5 inches. The graphite crucible is carefully centered in this graphite powder to a depth of about 3 inches. Coarse graphite chips (+20M) are

UCCNHT0000299

then placed on top of the powder to the top of the graphite crucible. These chips serve to prevent the powder from blowing out of the thimble during the initial degassing operation.

This assembly is then lowered into the quartz tube where it rests on a 1- to 2-inch layer of quartz chips. The graphite funnel is next placed in position in the mouth of the crucible. A copper funnel rests in the top of the brass head and serves to guide samples into the graphite funnel. (See Figure 2)

Vacuum Pumping System - One two-stage and one three-stage glass mercury diffusion pump with a high capacity and high backing-up pressure, respectively, are connected to the brass head with 1-1/2-inch Pyrex tubing and ball and socket joint The pumps are heated electrically The output of the three-stage pump feeds into an automatic Toepler pump which compresses the gases into one of several calibrated volumes. There are by-passes in this system for McLeod, Todd and Piranni gauges, and for a third diffusion pump and mechanical pump for initial pumping out of the system.

PROCEDURE

Sample preparation - see Note 3

Place samples and platinum in the side arms of the furnace head. Close the furnace and evacuate. Heat the graphite crucible to 2300 to 2500°C. for approximately 4 to 5 hours. Vent the gas collected during this period to the atmosphere. Turn off the power, allow the crucible to cool to approximately 1500°C., shut off the system from the atmosphere, and determine the blank by dropping a piece of platinum equal in weight to platinum wrapped with sample. When a satisfactory blank is obtained, drop the samples with platinum successively and collect the gases evolved in the calibrated volume and analyze. A 10- to 15-minute fusion time is normal for most samples. The crucible is cooled to 1500°C. between each sample introduction and then the temperature is raised to 2000°C. to ensure complete reduction.

An aliquot of the gas from a sample is taken into a special analyzer (Figure 3). The gas is confined in the copper oxide tube by raising the mercury in the analyzer bulb. Hydrogen is removed as H_2O with anhydrone and carbon dioxide is removed with Ascarite. Pressure differentials are read on the "leg" of the analyzer which serves as a manometer during analysis. The results of this analysis are calculated to standard conditions and to weight per cent of the gases in the sample after correcting for the blank. A similar type analyzer is described in the literature (5).

NOTES

1. The apparatus can, of course, be employed to determine gases in other materials, i.e., tantalum, titanium. tungsten, iron and steel, etc. Flux, temperature, time, etc. will necessarily have to be varied to suit each specific analysis.

2. Crucible - 7/8 x 3-1/2 inch - CCH Grade (National Carbon Company)

   Funnel - 1-1/2 x 1-3/16 inch - CCH Grade

3. Sample Preparation - Solid samples are cut into 1/4-inch cubes and cleaned with 70% HNO_3-30% HF solution or abraded with a file, washed with benzene or acetone, and air-dried. Finely divided samples are weighed into tin capsules (5 mm. by 13 mm.). All samples are wrapped with approximately twice their weight of 0.001 inch platinum sheet.

UCCNHT0000300

REFERENCES

1. Report of Oxygen Sub-group Niobium Task Force, Division M, Committee E-3, A.S.T.M., Atlantic City, New Jersey, June 23, 1959 (revised August 1959)

2. Guldner, W. G., Talanta, 8, 191-202 (1961)

3. Yeaton, R. A., Vacuum, 2, No. 2, 115-124 (1952)

4. "The Determination of Gases in Metals," Special Report 68, Iron and Steel Institute, London, England (1960)

5 Saunders, K W., Taylor, H. A., Journal of Chemical Physics, 9, 616-625 (1941)

UCCNHT0000301

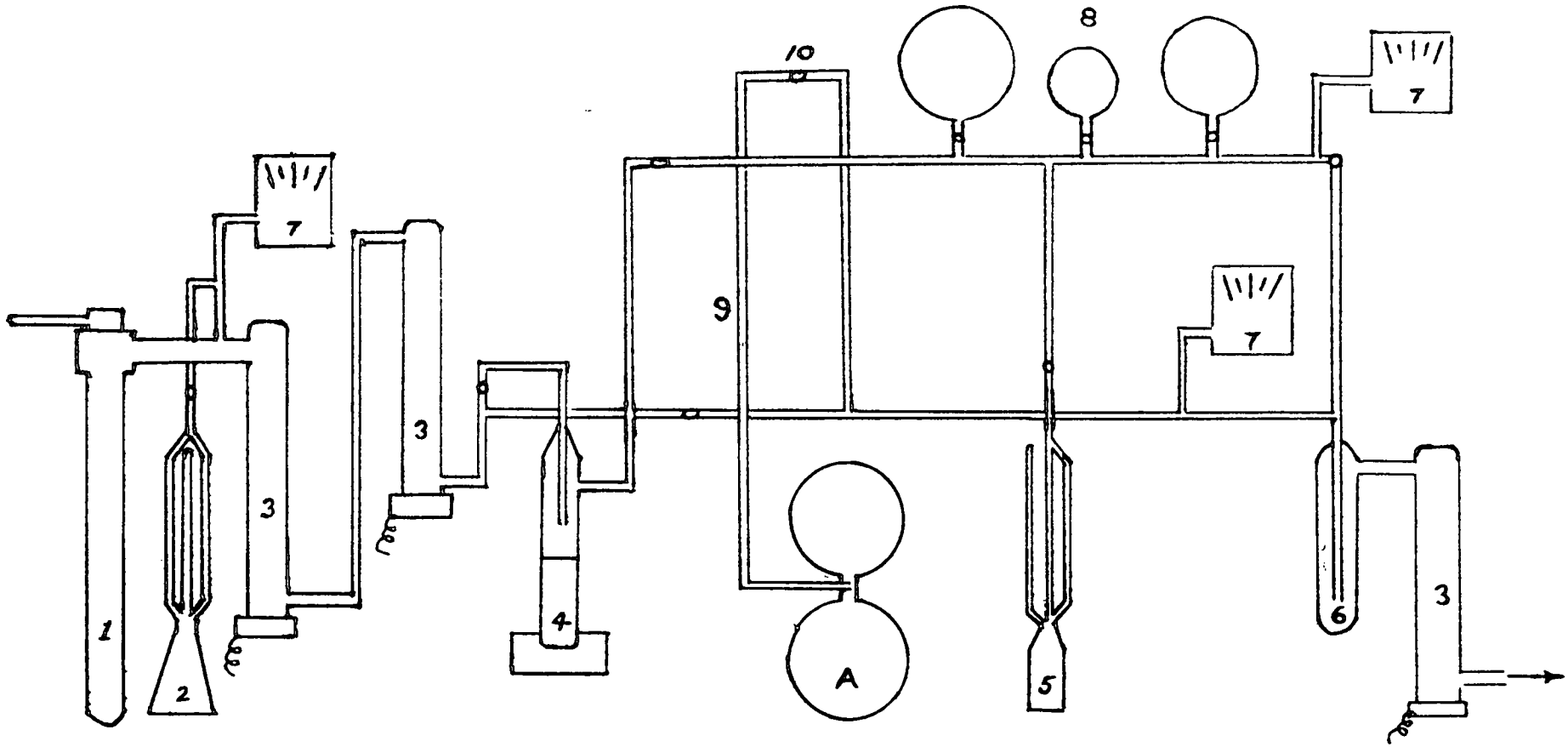

1. Furnace (Figure 2)
2. McLeod Gauge
3. Diffusion pumps
4. Toepler pump
5. Todd Universal Vacuum Gauge
6. Liquid nitrogen trap
7. Piranni Gauges
8. Calibrated volumes
9. Manometer
10. Aliquoting stopcock

A. Analyzer (Figure 3)

Figure 1 - Constant Volume "Micro" Vacuum Fusion Apparatus

UCCNHT0000302

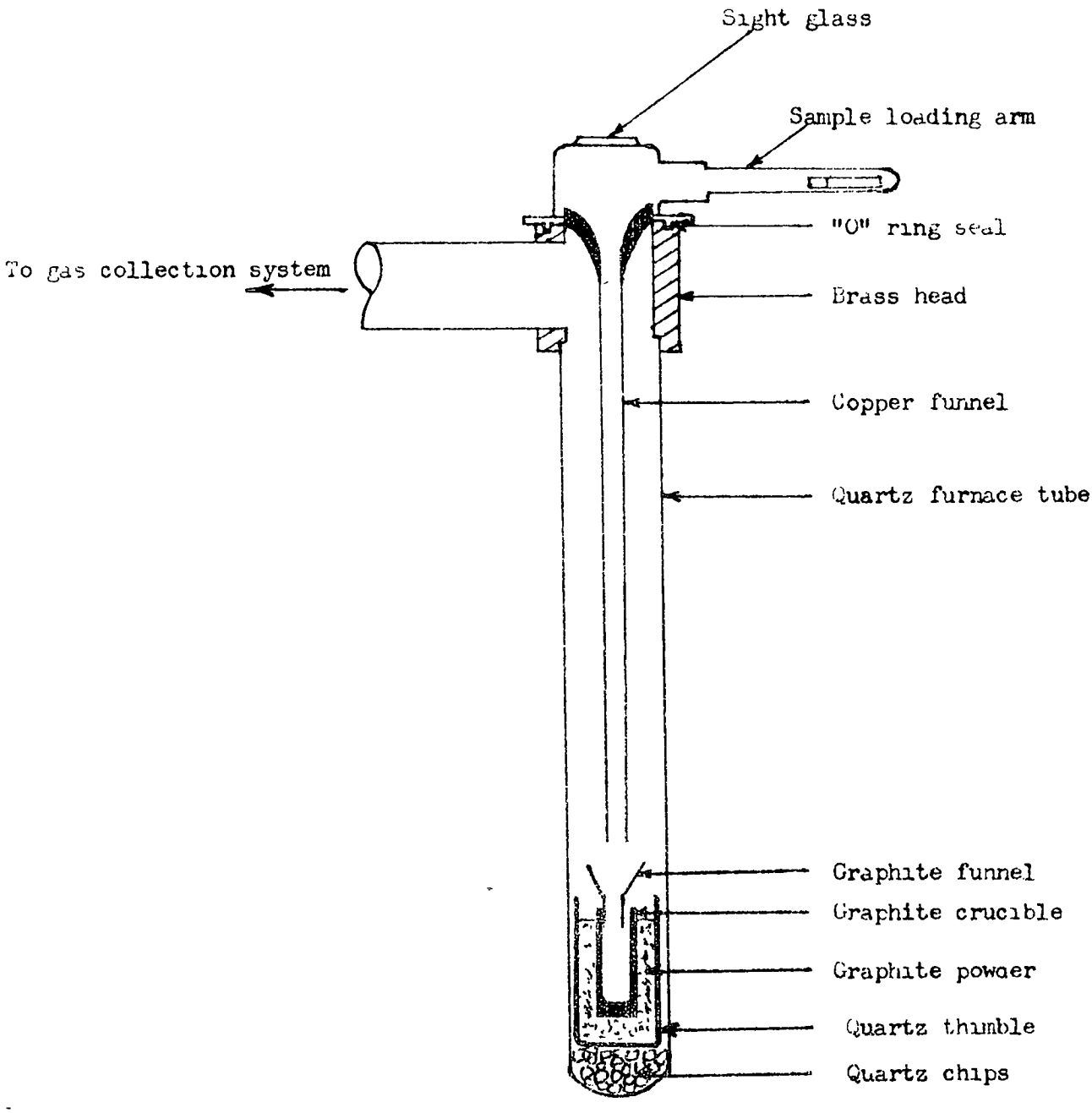

Figure 2 - Furnace Assembly

UCCNHT0000303

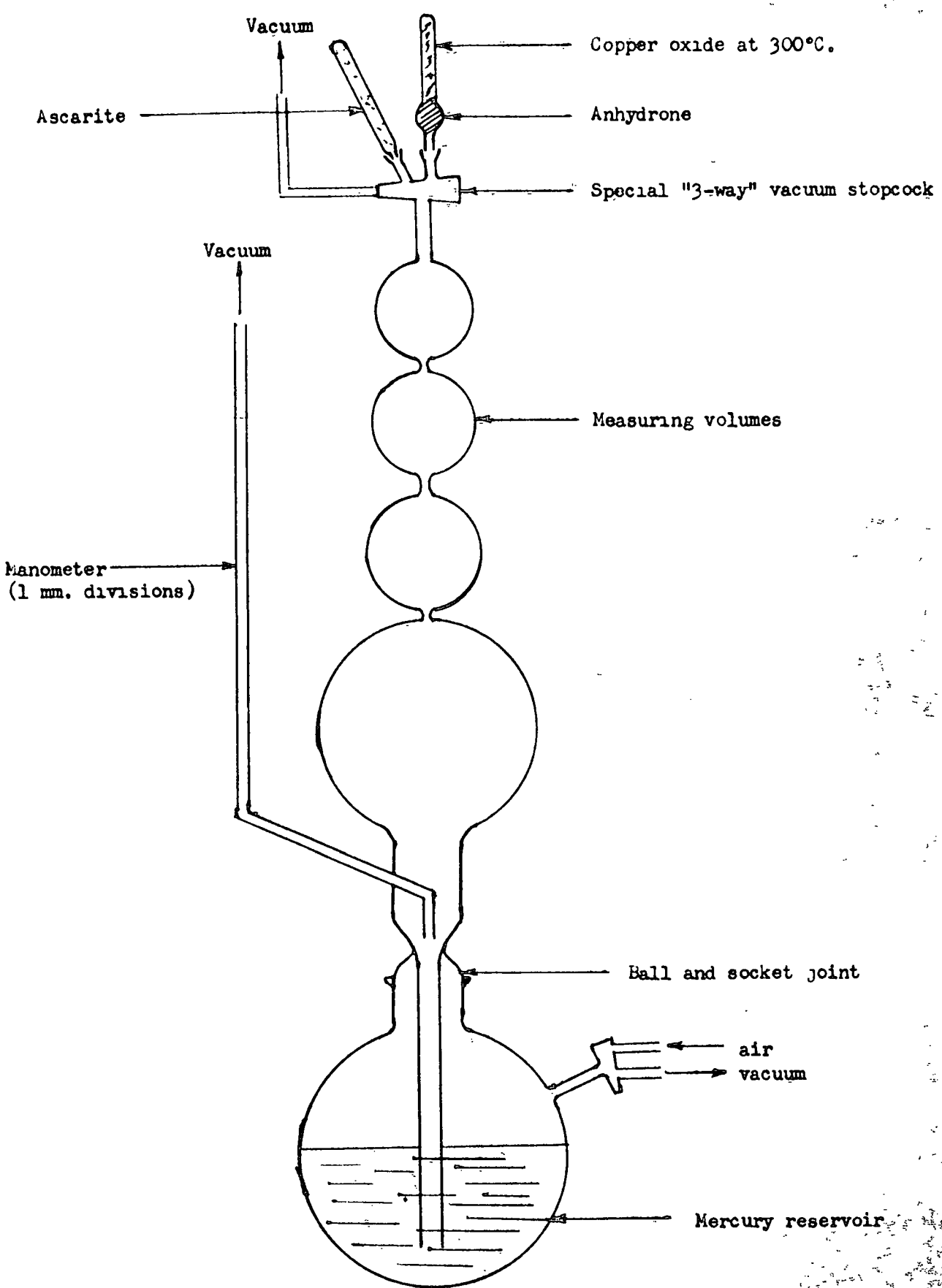

Figure 3 - Gas Analyzer

UCCNHT0000304

Mr. A. H. Soeder

INTERNAL CORRESPONDENCE

LEFINS DIVISION

137 47th STREET, P O BOX 506, NIAGARA FALLS NEW YORK 14302

(Name) Mr. G G Borden
mpany UCC - Mining and Metals Division
cation P.O. Box 179
Marietta, Ohio

Date November 5, 1965

Originating Dept

Answering letter date

Subject Conditional Notice of Approval
Nos. 26 and 29 Furnaces
N.B.--HSSherman has original approval-w

Copy to Messrs. E Bond
R L Folkman
F L Evans + R. D. Sutton
L. LaFrance
H. S Sherman
N D. Yale

Dear Mr Borden

Attached for your information is a copy of a conditional approval for the dust collectors on No. 26 and No. 29 furnaces to be used in processing radioactive columbium ores.

Engineering and Construction is proceeding with detailed plans and obtaining quotes for the dust collector. They are awaiting clarification of quotes from manufacturers before placing an actual order It appears now that the best delivery we can expect will be twenty-two weeks with a minimum of four weeks installation after the collector arrives, providing all preliminary work is done before the collector arrives Providing orders are placed next week, it appears we will not be ready to operate on Axara ore until late May

Very truly yours,

A.H.Soeder/W
Attachment

UCCNHT0000305

STATE OF NEW YORK

DEPARTMENT OF LABOR

DIVISION OF INDUSTRIAL HYGIENE
80 CENTRE STREET
NEW YORK, N Y 10013

ADDRESS REPLY TO
252 Niagara Street
Buffalo, N. Y 14201
DATE November 3, 1965

Union Carbide Corp
Olefins Division
P O. Box 596
Niagara Falls, New York

Att: Mr. H. S Sherman, Asst. Supt -Engineering & Maintenance

NOTICE OF PLAN APPROVAL (CONDITIONAL)

Plan No BEP-188-65
Location of System 137 47th St., Niagara Falls
Ferro Alloy Smelting, Bldg. 29, Dept C6F, 2nd Fl.

We are pleased to advise you that the plans you submitted to the Department of Labor for an exhaust system to be installed or altered have been approved.

[ ] One set of these plans is returned herewith.

[X] One set of these plans, and a notice of determination regarding compliance with the New York State Air Pollution Control Board's "Rules to Prevent New Air Pollution", will be forwarded to you by that Board.

The above CONDITIONAL approval is granted subject to the following:

1. Velocity and visual tests to be performed by the Division of Industrial Hygiene to determine effectiveness of control at hoods.

When the system has been installed or altered, and is ready for test, kindly notify the office of the Division of Industrial Safety Service at the following address New York State Department of Labor, Division of Industrial Safety Service, 65 Court St., Buffalo, N. Y. - Att: Mr. P. A. Sonner, Supervising Inspector.

This approval is based upon conformance to standards and requirements of the Labor Law and to the applicable industrial codes of the State of New York. You are responsible for determining whether emissions from the system meet the requirements of any local air pollution ordinances. If any alterations of or additions to the above system are required which would change its operating characteristics, it will be necessary for you to submit revised plans to the Division of Industrial Hygiene for approval prior to making such alterations or additions.

FR:ML
c/c JB PAS

Morris Kleinfeld

MORRIS KLEINFELD, M D DIRECTOR
FOR THE COMMISSIONER

IH 223 (12-64) ENG

INTERNAL CORRESPONDENCE

OTEFINS DIVISION

137 17th STREET, P. O. BOX 596, NIAGARA FALLS, NEW YORK 14302

Mr. D. H. Hawkes
Safety Administrator

Date: November 4, 1966

Originating Dept: Works Spectrographic

Answering letter date:

Copy to: Mr. F. L. Evans + Mr. A. H. Soeder
Mr. J. W. Norwood
Mr. P. J. Sitzenstatter
Mr. C. H. Weaver
Mr. L. J. LaFrance + Mr. P. McDaniel

Subject: Radiation Measurements on Manufacturing Operations Involving Araxa Niobite

The continuation of Run 265 30:1 Ferrocolumbium started October 31, 1966, finished the following day, and produced Taps #5 through #18.

Readings taken with the ANC 100 x L radiation detector were taken at various places around furnace 29A from attitudes duplicating working positions of the operators, Tabulation as follows:

Cold charge of drums in the shell	0.5	MR/HR
Ore mix pile on deck	2 to 3	"
Deck around furnace and top hamper structure	>0.5	"
From deck toward shell during heat	>0.5	"
From operator's position during tapping	>0.5	"
At top of covered fume collecting drums	0.5	"
Against side of fume conveyor discharge chutes leading down into collecting drums	2 to 3	"
Cold slags accumulated in grid	2 to 3	"
Cleanup sweepings	1 to 2	"

RECEIVED
NOV 7 1966
MEDICAL DEPT.

UCCNHT0000307

With reference to the previous letter of July 26, 1966, it will be noted that no increase of any radiation hazards are evident.

The approaches to the furnace are properly marked as radiation area as well as the grids and waste containers. Instructions are prominently posted on the furnace deck instructing the operators in the special safety procedures of this operation, One omission was noted during the tapping operation when the sampler didn't use a respirator. Comment was made at the time to the operation foreman that the men should be trained to use the respirator whenever there is possibility of inhaling any particles air borne from this operation. The fume from this operation is quite chemically reactive and is irritating to the nasal passages, This circumstance could be a fortunate one making the operators more readily attentive to proper safety practices.

The metal product resulting from this run was studied in the #2 Packing Dept. No appreciable radiation level was apparent on any of the pieces of finished taps stored there prior to cleaning and sizing. The sample preperation room showed no residual level after normal cleanup.

All personnel in any way involved with the materials of this operation have been instructed in proper safety practices. In the immediate future, a supply of adhesive labels carrying the "Radioactive - Material" legend and radiation symbol are to be provided for marking all the containers for such products resulting from the operation. Rubber stamps producing such imprint are to be provided for marking requisition slips and sample packages as well. It is important that all waste products of this operation be accumulated for singular disposal under the conditions of the State License.

In conclusion, it appears that the safety precautions previously established for this operation are proving satisfactory.

Ernest H. Schustik

Niagara Works Spectroscopist
Niagara Works Radiation Protection Officer

EWSchustik :KJZ-11/4/66
Copies:FLE+AHS:JWN:PJS:CHW:
LJLaFrance+PMcDaniel

DRAFT

Answers to Health Department Check List Questions

1 Natural U_3O_8 and ThO_2 (source material).

2 Form

The ores will be processed in an electric arc furnace where the material will be heated until it becomes molten. At this time reducing agent will be added to reduce the columbium oxide to a metallic A slag metal separation is made and the molten slag is poured into 20 cubic foot cast iron pots and allowed to solidify The solid slag is then dumped and is ready for disposal

The slag is a mixture of chemical compounds in a solid state similar to rock formations ranging in size from 2,000 lbs. by down pieces. The Thorium or Uranium oxides will be dispersed through the pieces of slag

Analysis of 250 NT Uranium Bearing Slag presently stored at plant site

U_3O_8	.25%
Cb_2O_5	2.00
Ta_2O_5	.70
TiO_2	2.30
ZrO_2	1.00
Al_2O_3	50.00
CaO	25.00
MgO	14.25
Other rare earth oxides	3.50

Analysis of material to be generated 50,000 lbs. for test purposes and 100,000 lbs. to be generated per month, if successful.

ThO_2	1.25%
Cb_2O_5	1.00
Zr_2O_3	1.00
MgO	15.00
Al_2O_3	55.00
CaO	27.50

3 No salts will be added Lime and alumina will be added to the ore and columbium removed

4 None

5 Quantity to be disposed of --

1. Immediately - 250 NT slag containing .25% U_3O_8 or 1250 lbs. U_3O_8.

2. Shortly after license received 50,000 lbs: slag containing 1 25% ThO_2 or 625 lbs. ThO_2.

3. If tests prove successful, we will be producing 100,000 lbs per month of slag containing 1.25% ThO_2 or 1250 lbs ThO_2.

6. See Drawing S-8685-A. [illegible]

7. 540' x 1500' or 810,000 sq. ft.

8. The area at one time was a swamp and has been filled with slag to ground level of surrounding area. Elv. approx. 570

9. The soil underneath is clay with rock approximately 12 ft. below surface.

10. We would propose to dig the pit to a depth of 10 ft. below ground level.

11. ?

12. ?

13 We propose to cover with 4 ft of fill.

14. The area is fenced in and posted and patroled each shift.

15. We propose to mark the area with signs warning that radioactive material is buried in this area.

16. The area is fenced in, however, no other special precautions are planned to exclude rodents or animals. [illegible]

17. Over one mile to nearest public water supply.

18. Not sure, however, must be more than one-half mile.

19. 3600 ft. to Tuscarora Creek, adjacent to Pikes Creek which empties to city sewer, over mile to Niagara River.

20. Immediate area is devoid of edible plant life.

21. Nearest habitation approximately 1500 ft.

22. We propose to keep our regular run records and disposal records in our main office files where they would be available for inspection at any time. We would also propose a retention time of 30 years on these files. In addition, we would keep the Niagara County Health Department informed by letter monthly of the amount and location and content of slag disposed of.

23 The slag would be monitored by a plant radiation officer, Hugh O'Hear, using a Ray-O-Tec portable survey meter. Presently this is done every six months on the slag we have stored in the yard.

24 Our plant radiation officer would be available for emergency monitoring

25. Does not apply

26. Land is owned by Union Carbide Corporation.

27. Slag would be transported by company truck over private roads to burial grounds.

28. --

TECHNOLOGY DEPARTMENT

PREPARATION OF TANTALUM-COLUMBIUM ALLOY POWDERS

Written By C. R. McKinsey

Job Order No.
840-95380-P

May 10, 1963

METALS RESEARCH LABORATORIES
TECHNICAL REPORT NO. P-63-9

Work Performed By:

H. J. Brown
F. J. Fasso
C. R. McKinsey

MAY 20, 1963

SECURITY COPY

UNION CARBIDE METALS COMPANY
DIVISION OF UNION CARBIDE CORPORATION

4625 ROYAL AVENUE, P. O. BOX 580
NIAGARA FALLS, NEW YORK

EXECUTIVE OFFICES 270 PARK AVENUE NEW YORK 17, N.Y.

UCCNHT0000312

ABSTRACT

Techniques were studied for the preparation of homogeneous columbium-tantalum alloy powders. A powder metallurgy approach was found satisfactory. Quantities of -200 mesh powder ranging from 4.2 to 4.7 pounds were prepared for each of the following nominal compositions: 25% tantalum-75% columbium, 50% tantalum-50% columbium, 75% tantalum-25% columbium, and 100% tantalum. Final nitrogen content was somewhat higher than desired, but the powders were satisfactory in other respects.

UCCNHT0000313

Job Order No. 840-95380-P

Niagara Falls, New York
May 10, 1963

PREPARATION OF TANTALUM-COLUMBIUM ALLOY POWDERS

A. Introduction

The Metals Research Laboratories acted as a sub-contractor, under Kemet P. O. 233-41344, for contract No. NObsr-87478 between the Navy Bureau of Ships and Kemet Department of the Linde Company. The objective of the sub-contract effort was to prepare and analyze several pounds each of four different alloy powders, 25% tantalum-75% columbium, 50% tantalum-50% columbium, 75% tantalum-25% columbium, and 100% tantalum. The powders were to be submitted to the prime contractor for evaluation.

The contractor preferred that the alloys be prepared by powder metallurgy techniques. This necessitates homogenization of the alloy composition during the sintering operation. Estimates of interdiffusion coefficients in the tantalum-columbium alloy system, as described in the Appendix, indicated that homogeneity could be achieved by sintering for several hours at a temperature of 2000°C. or higher with well blended, -200 mesh powders. Accordingly, the powder metallurgy approach appeared to be feasible.

The experimental program consisted of first piloting small samples of two compositions to determine whether a satisfactory product could be obtained and subsequently proceeding with the preparation of several pounds of each composition. Because of time considerations, the two phases overlapped and production of the final powder was initiated as soon as it was indicated that homogeneity could be achieved with the first of the two pilot samples.

B. Experimental Techniques

Two ball mills, each of about one-gallon capacity, were used for milling and blending. One mill was lined with tantalum and utilized arc-cast tantalum buttons as grinding media while the other was lined with columbium and utilized rectangular lumps of columbium plate trimmings. Both mills were equipped with O-ring seals and were loaded and unloaded in an argon-filled dry box. Either vibratory or rotating milling action was used.

Compacting was done in a piston-type hydrostatic press having a 1.77-inch diameter chamber with glycerin as the fluid media. Load was applied to the piston via a 500-ton hydraulic press.

Heat-treatment was done in an NRC resistance-heated vacuum furnace, type 2915B, equipped with tungsten heating elements and tungsten-molybdenum heat shields. The furnace is designed to operate for prolonged periods at 2200°C. and intermittently at temperatures up to 2400°C. in vacuum, inert gas, or hydrogen atmospheres. When hydrogen was used, cylinder hydrogen was passed through a platinum catalyst and a Lectrodryer to provide a dew point of about -40°C. Temperature was measured with an optical pyrometer. The furnace does not provide perfect blackbody conditions, so corrections must be made for emittance, and the furnace manufacturer provided temperature corrections for the range of 1600 to 2150°C. The correction was approximately 100°C. for the sintering range used in this program.

Arc melting for control samples was accomplished in a tungsten electrode furnace equipped with water-cooled copper hearth plates. Melting was done in an atmosphere of helium, pre-purified by passing through zirconium chips heated to 800°C. A columbium button was melted first to further getter the atmosphere.

Homogeneity was studied by means of an AEI electron microprobe. The spot diameter was approximately 2 microns and radiation was measured for 40 seconds.

Density was determined by displacement in mercury.

C. Preparation of Pilot Alloys

1. 25% Tantalum Alloy

The 25% tantalum composition was selected for the initial processing study since this alloy had the lowest interdiffusion coefficient. The alloy was processed in accordance with the flowsheet shown in Figure 1. It was considered appropriate to include an arc-melting step in the initial study as a control and in the event that an alternative consolidation technique would be required.

a. Milling

Hydrogen-bearing columbium from Lot BM 818 and hydrogen-bearing tantalum from Lot 1883 were ball milled to -200 mesh in the columbium-lined and tantalum-lined mills, respectively. A 3/4-pound charge of tantalum was completely reduced to -200 mesh in one hour whereas a 2-pound charge of columbium was 78% reduced to -200 mesh in 6.5 hours. The relative ease of milling of the two materials is undoubtedly largely due to their respective hydrogen contents. Particle size distribution is shown in Figure 2, and interstitial content before and after milling in Table I. Both the oxygen and carbon contents increased during milling. The hydrogen contents shown in Figure 2 are for the as-milled material. The particle size distribution was determined after dehydriding, but the distribution should not be affected significantly by that treatment.

b. Dehydriding

The tantalum powder was dehydrided by slowly heating to the temperature range of 700 to 800°C. in vacuum and holding until degassing was complete The final furnace pressure was 0.06 micron and the leak rate cold was 0.36 micron per hour. The columbium powder was dehydrided in the same manner. The final pressure was less than 0.01 micron and the leak rate was 1.8 microns per hour. The dehydriding treatment had no significant effect on the bulk density but the oxygen content was apparently increased by about 8% as shown in Table I.

c. Blending

A charge of 200 g. tantalum and 600 g. columbium was blended in the columbium-lined ball mill for 30 minutes and rescreened through 200 mesh. The bulk density is given in Table I.

d. Compacting

An attempt was made to press a one-pound compact 1/2 inch wide by 10

UCCNHT0000315

inches long in unlubricated steel dies at 35 TSI. This was not satisfactory as the compact had poor green strength and crumbled during handling.

Subsequently, five samples weighing from 11 to 188 g. each (a total of 409 g.) were compacted hydrostatically at 40 TSI in cylindrical plastisol molds, 1/2 to 7/8 inch in diameter. The resulting compacts had a green density of 8.0 g./cm.^{3} and the green strength was quite satisfactory.

e. Sintering

The compacts were sintered in a tantalum crucible containing a bed of blended 25% tantalum-75% columbium alloy powder. The sintering conditions were as follows:

Temperature, °C.			Time	Final Pressure
Optical		Estimated		
Range	Nominal	True	Hr.	Micron
1970-2050	2025	2120	.23	0.02

The loose powder sintered to the crucible and to the compacts and was not recovered. The compacts were successfully broken out with a small amount of sintered powder adhering to the bottom of each compact. Chemical analysis indicated a marked reduction in interstitial content during sintering as shown in Table I. The sintered density was 9.3 g./cm.^{3}.

f. Arc Melting

Three of the sintered bars weighing a total of 211 g. were tungsten arc melted four times in 1/2- by 1- by 5-inch copper bar mold, inverting between each melt. The current was 300 to 480 amp. DCSP. Analysis indicated a further reduction in carbon content and a slight increase in oxygen content (Table I). Density increased to 10.1 g./cm.^{3}.

g. Homogeneity

Transverse sections 1/4 inch thick were cut from the center of the arc-melted bar and from a sintered bar. Metallographic examination revealed no gross inhomogeneity. The sintered bar contained numerous small pores rather uniformly distributed while the arc-melted bar was free from porosity as would be anticipated by the high density.

The results of electron microprobe examination are given in Table II. The reported values for tantalum were calculated from a pure tantalum standard and may not be quantitatively precise, but the relative tantalum content among the various spots in the same sample should be quite precise. A new filament was installed in the probe prior to examination of the arc-melted sample. Filaments tend to be somewhat unstable until aged and several readings were discarded because of an obvious drift in filament current. This tendency toward instability may account for the slightly larger standard deviation in that sample. However, the homogeneity of both samples appeared to be quite satisfactory for this investigation in which the nominal gross alloy content differs by 25% between compositions.

UCCNHT0000316

The average tantalum content of the arc-melted sample was 8% higher than that of the sintered sample. No great significance should be attached to this in the absence of confirming quantitative analysis since the calibration would be affected by surface condition of the specimen and density of the spot volume. The density difference between the two samples is in the right direction to account for the difference in apparent average tantalum content.

h. Hydriding

Tantalum absorbs hydrogen quite rapidly at temperatures in the order of 400 to 500°C.[1]. The critical temperature range for columbium is probably quite close to that for tantalum. With large masses of metal, hydriding is usually accomplished by heating the charge above the critical temperature then allowing it to cool within the furnace. The cooling rate through the critical range is sufficiently slow so that ample quantities of hydrogen are absorbed, provided that the surface of the metal is clean. Since the mass of the charge in the present program was so small, the cooling rate through the critical range was controlled by reducing the furnace current periodically. The critical temperature was below the range at which the optical pyrometer could be used, so it was necessary to step cool in small current increments and to define the critical range by observing a drop in the hydrogen pressure. The furnace was then maintained at constant current until the pressure became stable. In order to provide a greater surface area for absorption, the sintered and arc-melted bars were cold-rolled to a maximum of 1/16-inch thick sheet which was degreased and pickled in 10% HF-90% HNO_3. The sheet was sheared into small pieces and placed in tungsten crucibles for the hydriding operation.

The first three attempts at hydriding were unsuccessful due to leaks developing in the vacuum furnace during the run and/or cooling too rapidly through the critical range. On the fourth attempt, a technique was adopted which appeared to be satisfactory. The charge was heated to 1400°C. in vacuum to distill off any surface impurities and dissolve any residual oxide film. Hydrogen was then introduced to one-pound positive pressure and the furnace allowed to cool to 700 to 800°C. Thereafter the furnace current was reduced in 50-ampere steps (corresponding to 30 to 50°C) every 30 minutes until a distinct pressure drop was noted. Thereafter, the furnace was held at each current increment until hydrogen absorption appeared to be complete. When no pressure drops were observed during further step cooling, the power was shut off and the furnace cooled overnight under one-pound hydrogen pressure. The hydrogen content of the alloy was increased to 870 parts per million and the sheet was embrittled.

i. Milling

The hydrided sheet was ball milled in a columbium-lined mill and 71% of the charge was reduced to -200 mesh in eight hours. The powder was not further analyzed as furnace leaks were known to have developed during two of the hydriding runs and the product would not be expected to have high purity.

2. 75% Tantalum Alloy

It was thought advisable to prepare a small sintered bar of the 75% tantalum composition for homogeneity determination, to ensure that there was no

(1) G. L. Miller, Metallurgy of the Rarer Metals, 6, Niobium and Tantalum, Academic Press, Inc., New York (1959)

UCCNHT0000317

adverse and unexpected effect of composition on the sintering characteristics. The techniques were the same as those used for the 25% tantalum alloy.

The first 100-g. charge was lost during blending when a holding strap on the vibratory ball mill broke and the contents were thrown out of the mill. A second 100-g. charge was lost when a ceramic boat was inadvertently used as a support for the compact during sintering. The ceramic melted and contaminated the compact. An additional 102 g. were absorbed in the columbium lining of the ball mill during blending, but a 98-g. compact was successfully prepared and sintered in a tantalum crucible under the following conditions:

Temperature, °C.			Time	Final
Optical		Estimated		Pressure,
Range	Nominal	True	Hr.	Micron
2050-2150	2100	2205	23.5	< 0.01

The interstitial content was effectively reduced during sintering and the density was increased to 12.8 g./cm.^{3} as shown in Table I.

The results of electron microprobe examination of a sample cut from the center of the bar are included in Table II. The homogeneity was comparable to that achieved with the 25% tantalum alloy.

No further work was done with the 75% tantalum pilot alloy sample.

D. Preparation of Production Alloys

The pilot program indicated that satisfactory homogeneity could be achieved by the powder metallurgy route. Consideration of various losses suggested that an 80% recovery might be expected. Since the target quantity was five pounds of each composition, an initial charge of 2840 g. per alloy was used. The alloys were produced in accordance with the flowsheet shown in Figure 3.

1. Milling

The columbium and tantalum were taken from the same lots as were used for the pilot alloys. The columbium was not sufficiently brittle for milling to -200 mesh in the quantities required for the production alloys, as only 1/2 pound of -200 mesh was obtained after six hours milling of a 9-pound charge and only 1 pound was obtained after 7-3/4 hours milling of a 4-1/2-pound charge. Therefore, the columbium was rehydrided in the same furnace run as the final hydriding operation with the 25% tantalum pilot alloy. The resulting hydrogen content was 0.85%, and 100% of that material was milled to -200 mesh in six hours. The particle size distribution shown in Figure 2 indicated a smaller proportion of the coarser fractions (> 25 microns) than had been obtained with the material used for the pilot alloys.

The tantalum milled satisfactorily without rehydriding. The size distribution was slightly altered from that prepared for the pilot alloy (Figure 2), probably because of the increased charge weight and increased milling time.

2. Dehydriding

The tantalum was dehydrided by heating overnight in vacuum at a maximum temperature of 975°C. The final pressure was 0.01 micron. The columbium was

UCCNHT0000318

dehydrided in the same manner at a maximum temperature of 845°C. with a final pressure of 0.04 micron.

3. Blending

The alloy additions were weighed and blended for 30 minutes in the tantalum-lined ball mill. An appreciable weight gain was obtained in each case. This was assumed to be tantalum pickup from the mill lining and the tantalum grinding media which would alter the nominal alloy tantalum content as shown in Table III. The interstitial analyses included in Table III will be discussed in a later section.

4. Compacting

Cylindrical compacts were prepared by hydrostatic pressing in rubber molds at 40 TSI. The green compacts were 3/4 to 1 inch in diameter by 1 to 1-1/2 inches high and weighed 145 to 165 g. Green densities are given in Table III.

5. Sintering

The compacts were stacked on a tungsten plate for sintering under the conditions given in Table IV. The intent was to sinter two alloys at one time but it was found too difficult to keep the charge from contacting the heating elements with such a large mass in the furnace. After the first run, a single alloy was sintered at one time. One attempt was made to hydride during cooling from the sintering cycle but insufficient hydrogen was absorbed, presumably due to the low surface area:volume ratio of the compacts.

For these prolonged heat-treatments, the furnace was allowed to run unattended overnight since it was equipped with safety devices which would prevent damage due to power failure, low water pressure, leaks in the vacuum chamber, etc. On several occasions, the furnace shut off during the night, causing some uncertainty in the sintering time for two of the alloys. However, all materials except the unalloyed tantalum were sintered for at least 24 hours. Since no interdiffusion was required for the tantalum, the minimum of 18 hours was considered adequate.

A total of nine furnace runs were required to complete sintering of the four alloys. The tungsten heating elements were replaced three times, twice because the elements warped and cracked upon contacting the charge, and once when they were broken in handling while a leak was being repaired at the bottom of the furnace.

6. Cold-Rolling

All compacts were cold-rolled to 0.037-inch thick sheet, degreased, and pickled in 10% HF-90% HNO_3 prior to hydriding. The density of the cold-rolled material closely approached theoretical density as indicated in Figure 4. Theoretical density was estimated to vary linearly with the atomic per cent of tantalum present.

7. Hydriding

Hydriding was done in accordance with the technique devised for the pilot alloy. A typical furnace record is shown in Figure 5. The relatively

UCCNHT0000319

large mass of the charge in hydriding the production alloys resulted in a lower cooling rate after the power was shut off. Consequently, hydrogen contents of these alloys were much higher than that of the pilot alloy, ranging from 2800 to 5900 p.p.m. (Table III).

8. Milling

The 25% tantalum alloy was milled in the columbium-lined ball mill and all others in the tantalum-lined mill. Milling loss varied between 70 and 482 g. Recovery figures are given in Table V, including the overall values for the production operation.

9. Product Analysis

A riffled sample of the -200 mesh powder was analyzed for particle size distribution, bulk density, and chemistry. Bulk density increased with tantalum content as shown in Table III and Figure 4. Particle size distribution is shown in Figure 6. The 26% tantalum alloy contained the least fines despite the highest hydrogen content and the longest milling time. The unalloyed tantalum contained the greatest amount of -400 mesh material.

Chemical analyses are given in Table III and the estimated change in purity from the starting material is shown below:

Element	Alloy			
	25 Ta	50 Ta	75 Ta	100 Ta
C, p.p.m.	-25	-120	-85	-70
O, p.p.m.	-450	-900	-1450	-700
N, p.p.m.	+78	+275	+542	+270
Ta, %	+1.3	+7.3	+5.8	-1.0*
Accountable Ta, %	1.3	1.8	2.0	0
Unaccountable Ta, %	0	5.5	3.8	1.0

* Based on Cb pickup of 1%

The carbon and oxygen contents were reduced during processing but the nitrogen content increased. The elemental columbium starting material had an abnormally high nitrogen content of 630 p.p.m., an increase of 500 p.p.m. over the lot analysis. This was unexpected and since the analysis was not available until after blending and compacting had been completed and sintering was partially completed, it was not possible to make substitution at that time. Data for the two pilot alloys indicated that nitrogen would be reduced during the sintering step so it was anticipated that the final nitrogen contents of the production alloys would be low despite the relatively high initial nitrogen content. However, nitrogen increased rather than decreased during processing. Nitrogen could be introduced into the process through an undetected leak in the vacuum furnace, as an impurity in the hydrogen gas, or possibly during milling. The actual source of the nitrogen is not known at this time. The only known source for tantalum pickup would be the ball mill used for blending and milling. The weight gain during blending could account for that portion of the increase labeled "accountable tantalum." The additional tantalum in the 50 and 75% tantalum alloys could result from a net gain in tantalum during the final milling operation despite the overall weight loss or from a combined alloy loss and tantalum pickup during the blending operation. The former reason is favored since the 25% tantalum alloy was milled

UCCNHT0000320

in a columbium-lined mill and contained no unaccountable tantalum. Any tantalum picked up during the final milling operation would be present as elemental tantalum and would be presumably distributed uniformly throughout the alloy powder.

The 1% columbium in the unalloyed tantalum powder was undoubtedly picked up from the ball mill.

E. Materials Balance

A materials balance for the raw materials, pilot alloys, and production alloys is presented in Tables VI, VII, and VIII, respectively.

C. R. McKinsey

C. R. McKinsey

CRM:cew

UCCNHT0000321

TABLE I

Density and Composition of Pilot Alloys

Density, g./cm.^{3}		Unalloyed Columbium	Nominal 25% Ta	Nominal 75% Ta	Unalloyed Tantalum
Bulk, -200 mesh, hydrided*		3.6	-	-	6.6
Bulk, -200 mesh, dehydrided*		3.5	4.1	5.6	6.6
Green, 40 TSI compact		-	8.0	10.4	-
Sintered		-	9.3	12.8	-
Sintered and arc melted		-	10.1	-	-
Bulk, alloyed powder*		-	3.8	-	-
Composition, p.p.m.					
As-received, Lot analysis	C	80	-	-	160
	O	2700	-	-	2000
	N	130	-	-	90
-200 mesh, as-milled	C	220	-	-	590
	O	3800	-	-	2700
	H	1500	-	-	3500
-200 mesh, dehydrided**	C	250	(338)	(512)	600
	O	4100	(3800)	(3200)	2900
	H	< 10	(< 10)	(< 13)	< 13
	N	190	(172)	(138)	120
Sintered	C	-	150	60	-
	O	-	200	300	-
	H	-	< 10	17	-
	N	-	< 100	< 100	-
Sintered and arc melted	C	-	50	-	-
	O	-	300	-	-
	H	-	12	-	-
	N	-	< 100	-	-
-200 mesh, hydrided alloy powder	H	-	870	-	-

* Converted from Scott density, g./in.^{3}

** Alloy interstitial content calculated from that of elemental additions

TABLE II

Electron Microprobe Analysis of Pilot Alloys

25% Ta-75% Cb

Sintered Location	No.	% Ta	Arc Melted Location	No.	% Ta
Random spots on unetched surface	1	26.1	Random spots on unetched surface	1	29.0
	2	23.8		2	29.9
	3	27.0		3	27.1
	4	26.7		4	27.7
	5	26.7		5	29.2
	6	26.4		6	27.5
	7	27.1		7	28.5
				8	29.9
Etched, Grain 1	8	26.2			
" "	9	26.4	Etched, Grain 1	9	26.8
" "	10	26.8	" "	10	26.8
Etched, Grain 2	11	26.2	" "	11	26.9
" "	12	25.9	Etched, Grain 2	12	28.8
" "	13	26.0	" "	13	28.0
Etched, Grain 3	14	25.6	" "	14	28.0
			Etched, Grain 3	15	29.5
			Etched, G. boundary	16	29.5

75% Ta-25% Cb

Sintered Location	No.	% Ta
Longitudinal survey, spots spaced 500-600 microns on unetched surface	1	76.8
	2	79.0
	3	76.8
	4	78.1
	5	76.3
	6	74.5
	7	75.3
	8	77.2
	9	76.7
	10	78.8
Transverse survey, as above	11	78.2
	12	79.8
	13	75.1
	14	75.2
	15	75.0
	16	77.2
	17	76.8
	18	75.9
	19	75.3
	20	77.2

Statistical Analysis

Sample	No. of Determinations	% Tantalum Avg.	High	Low	Range	Std. Dev.
25% Ta, sintered	14	26.2	27.1	23.8	3.3	0.78
25% Ta, arc melted	16	28.3	29.9	26.3	3.6	1.04
75% Ta, sintered	20	76.8	79.8	74.5	5.3	1.44

UCCNHT0000323

TABLE III

Density and Composition of Production Alloys

Density, g./cm.^{3}		Unalloyed Columbium	Nominal 25% Ta	Nominal 50% Ta	Nominal 75% Ta	Unalloyed Tantalum
Bulk, blended powder*		3.1	4.2	5.3	6.1	6.2
Green, 40 TSI compact		-	8.0	9.2	11.0	12.8
Sintered and cold-rolled		-	9.8	10.7	13.3	16.4
Bulk, alloyed powder*		-	3.7	4.4	5.4	6.6
Composition, p.p.m.						
-200 mesh, dehydrided blended powder**	C	100	(125)	(150)	(175)	200
	O	4500	(4050)	(3600)	(3150)	2700
	H	16	(80)	(143)	(206)	270
	N	630	(502)	(375)	(248)	120
	Ta (%)	-	(26.3)	(51.8)	(77.0)	Bal.
-200 mesh, hydrided alloy powder	C	-	100	30	90	130
	O	-	3600	2700	1700	2000
	H	-	5900	5100	3200	2800
	N	-	580	650	790	390
	Ta (%)	-	26.3	57.3	80.8	Bal.
	Cb (%)	-	72.2	41.4	18.3	0.96

* Converted from Scott density, g./in.^{3}

** Alloy interstitial content calculated from that of elemental additions; alloy tantalum content corrected for weight gain during blending.

UCCNHT0000324

TABLE IV

Sintering Conditions for Production Alloys

Alloy	Temperature, °C. Optical Range	Temperature, °C. Optical Nominal	Temperature, °C. Estimated True	Time, Hr.	Final Pressure, Micron
25Ta-75Cb	2025-2060	2050	2150	24	< 0.01
50Ta-50Cb	2020-2070	2050	2150	24	0.04
75Ta-25Cb	1970-2100	2050	2150	26.5*	0.02
100Ta	2020-2130	2050	2150	18 *	0.02

* Minimum

TABLE V

Recovery Values for Production Alloys

Alloy	Recovery of -200 Mesh Powder: Final Milling % of Charge	Final Milling % of Product	Overall % of Charge	Overall % of Blend
25% Ta	76	94	67	66
50% Ta	78	84	72	69
75% Ta	72	82	73	68
100% Ta	81	87	75	75

TABLE VI

Materials Balance for Raw Materials
(Weight Given in Grams)

	Columbium		Tantalum	
Purchased	5448		9420	
Net gain during milling	188		0	
Total	5636	5636	9420	9420
Alloy Uses				
25% Ta pilot alloy	800		200	
75% Ta pilot alloy	50		283	
75% Ta production alloy	710		2130	
50% Ta production alloy	1420		1420	
25% Ta production alloy	2130		710	
100% Ta production alloy	0		2840	
Subtotal	5110	5110	7583	7583
Losses				
Milling	0		546	
Dehydriding, sampling, misc.	209		203	
Subtotal	209	209	749	749
On Hand				
-200 Mesh	45		372	
+200 Mesh	272		716	
Subtotal	317	317	1088	1088
Total		5636		9420

UCCNHT0000326

TABLE VII

Materials Balance for Pilot Alloys
(Weight Given in Grams)

Raw Materials	25% Ta-75% Cb		75% Ta-25% Cb	
Columbium, -200 mesh	600		50	
Tantalum, -200 mesh	200		283	
Blended 25Ta-75Cb, -200 mesh	—		67	
Total	800	800	400	400
Losses				
Blending and compacting	50		203	
Sintering	145		105	
Cold-rolling and pickling	13		-	
Hydriding and milling	84		-	
Sampling and misc.	39		-	
Charge for 75Ta-25Cb alloy	67		28	
Subtotal	398	398	336	336
On Hand				
Blended powder	129		-	
Sintered bar	-		64	
Sintered powder, hydrided				
-200 mesh	191		-	
+200 mesh (scrap)	82		-	
Subtotal	402	402	64	64
Total		800		400

UCCNHT0000327

TABLE VIII

Materials Balance for Production Alloys
(Weight Given in Grams)

Item	25Ta-75Cb		50Ta-50Cb		75Ta-25Cb		100Ta	
	Δ W	Bal.	Δ W	Bal.	Δ W	Bal.	Δ W	Bal.
Cb, -200 mesh, dehydrided	+2130	2130	+1420	1420	+710	710	0	0
Ta, -200 mesh, dehydrided	+710	2840	+1420	2840	+2130	2840	+2840	2840
Blended, Ta-lined mill*	+50	2890	+110	2950	+249	3089	Not done	2840
Compacted, hydrostatic, 40 TSI	-65	2825	-72	2878	-22	3067	-39	2801
Sintered, cold-rolled, pickled	-215	2610	-158	2720	-117	2950	-101	2700
Hydrided	-70	2540	-80	2640	0	2950	-40	2660
Ball milled, Ta-lined mill**	-482	2058	-162	2478	-349	2601	-70	2590
Sampled (-200 mesh)	-28	2030	-27	2451	-32	2569	-30	2560
Product on Hand								
-200 mesh	+1910	1910	+2039	2039	+2086	2086	+2130	2130
+200 mesh ***	+120	2030	+412	2451	+483	2569	+430	2560

* Weight gain assumed to be Ta from the balls and lining
** Cb-lined mill used for 25Ta-75Cb alloy
*** Includes some material from balls and mill lining

UCCNHT0000328

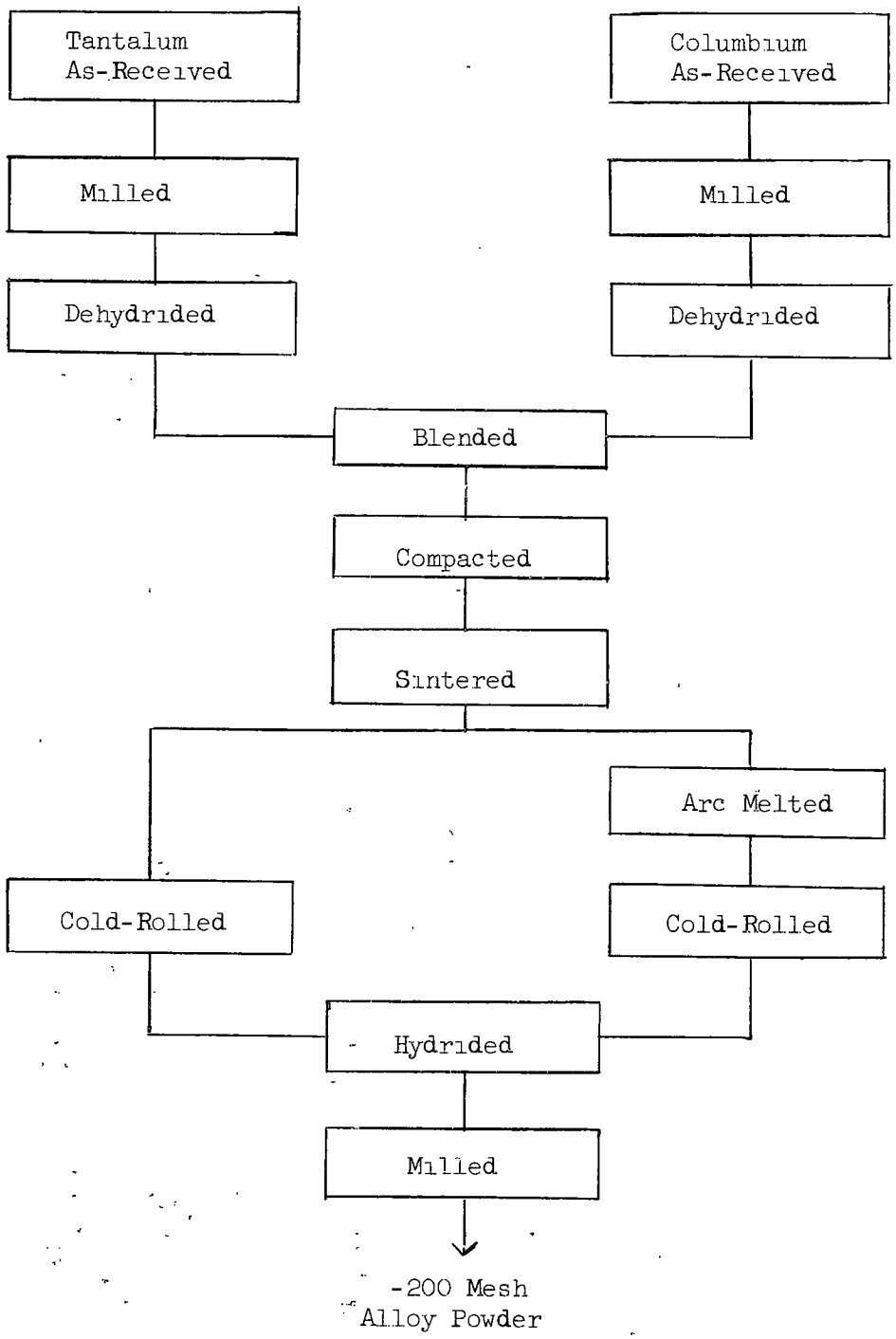

FIGURE 1 - Flowsheet for 25% Tantalum-75% Columbium Pilot Alloy

K+E SEMI LOGARITHMIC 358 61
KEUFFEL & ESSER CO.
2 CYCLES X 70 DIVISIONS

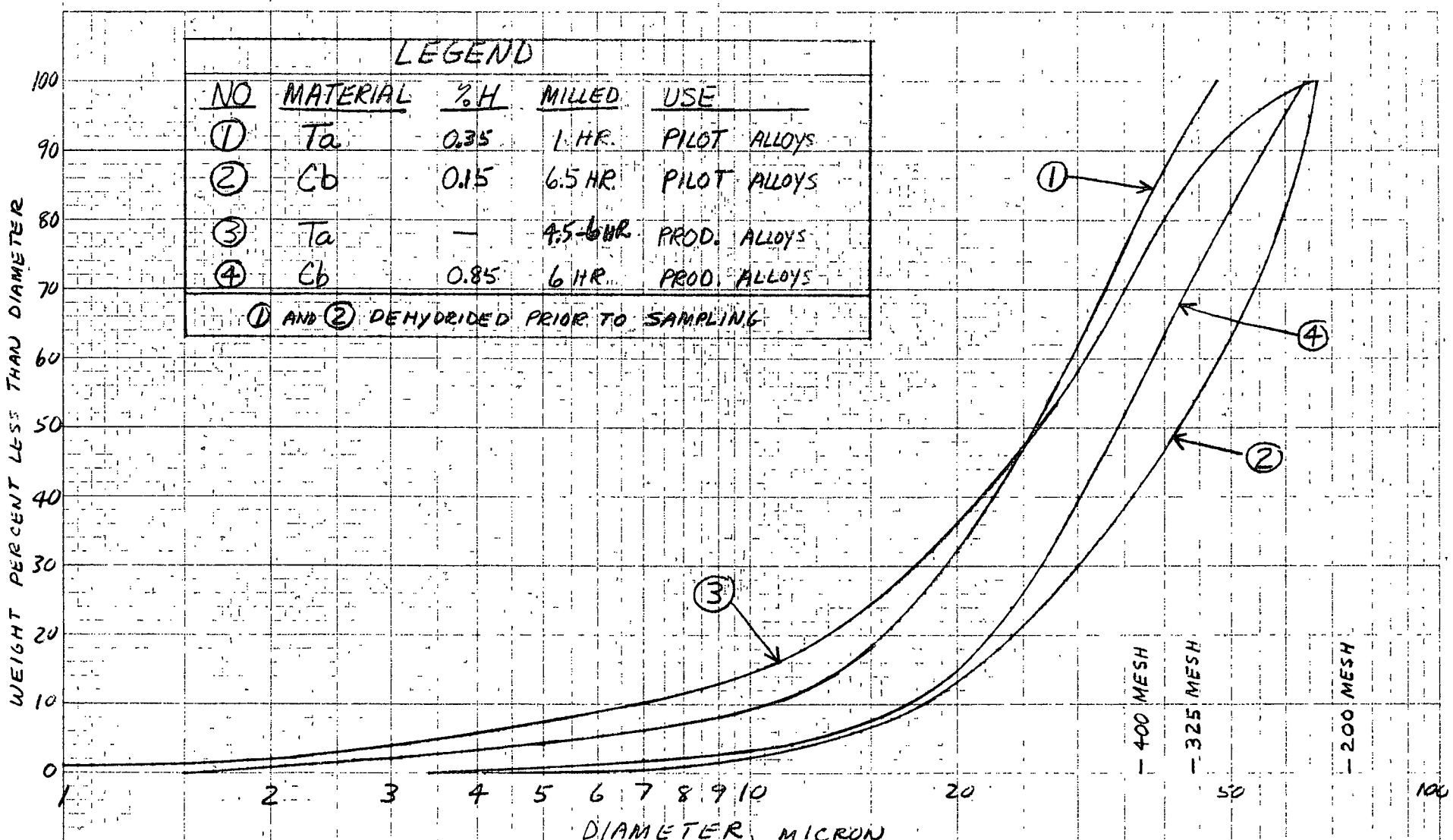

FIG. 2 MICROMEROGRAPH PARTICLE SIZE DISTRIBUTION OF -200 MESH RAW MATERIALS

UCCNHT0000330

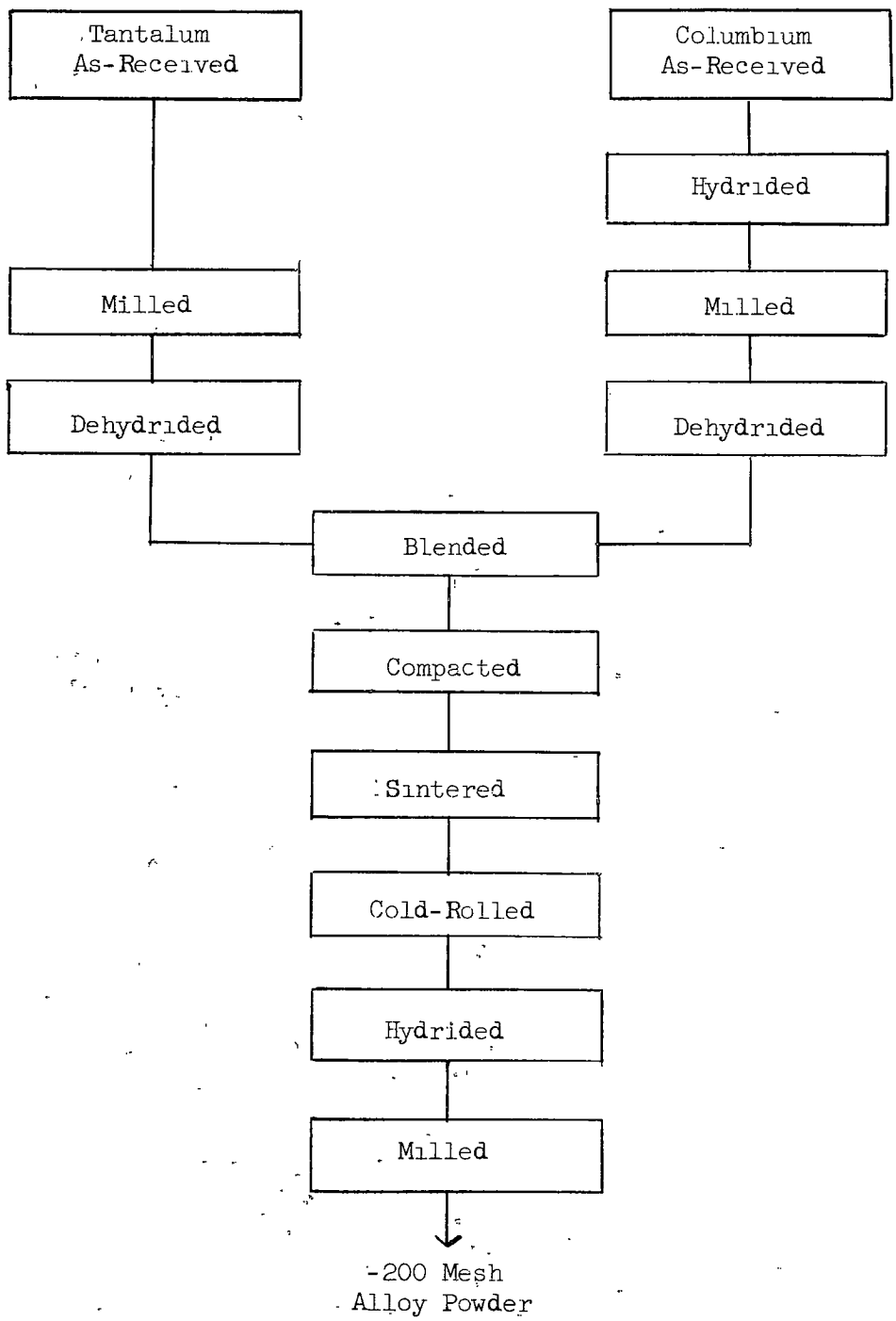

FIGURE 3 - Flowsheet for Production Alloys

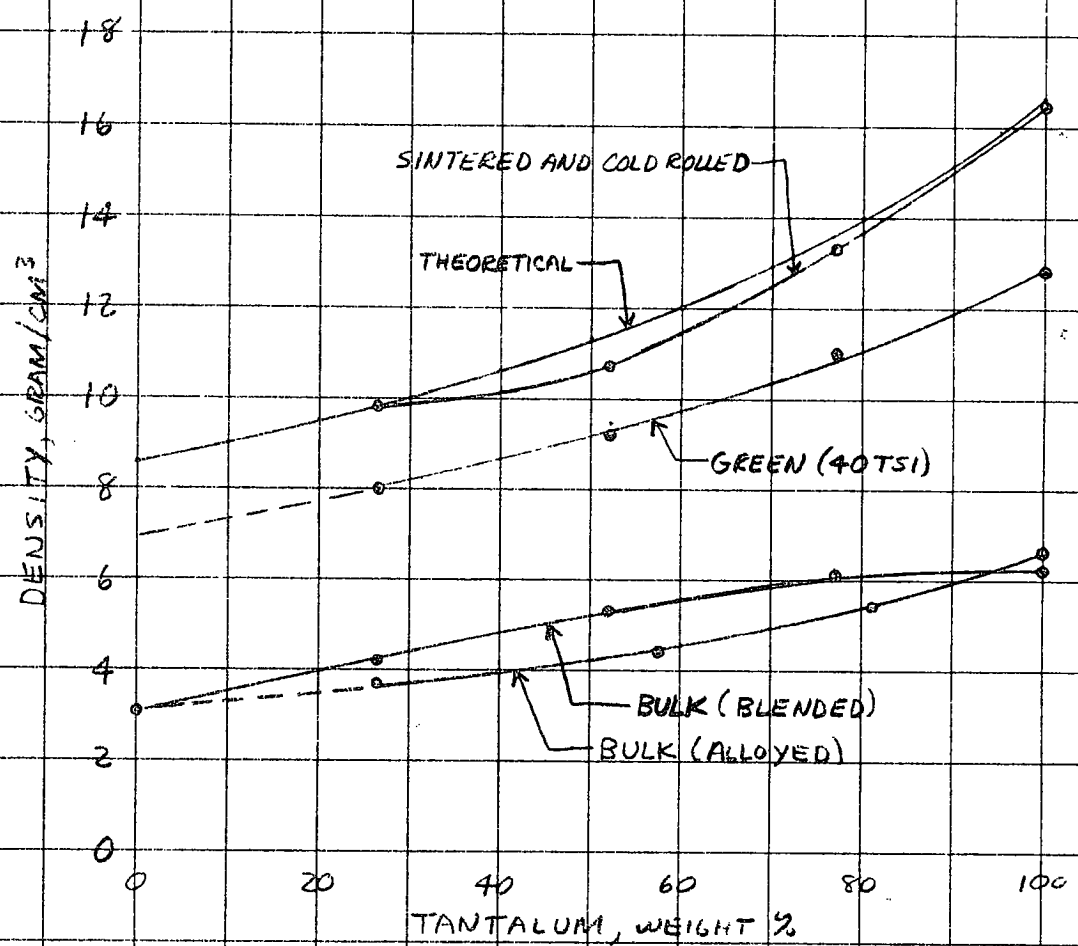

FIG. 4 DENSITY OF PRODUCTION ALLOYS

NO 4520 L 20X20 TO THE INCH

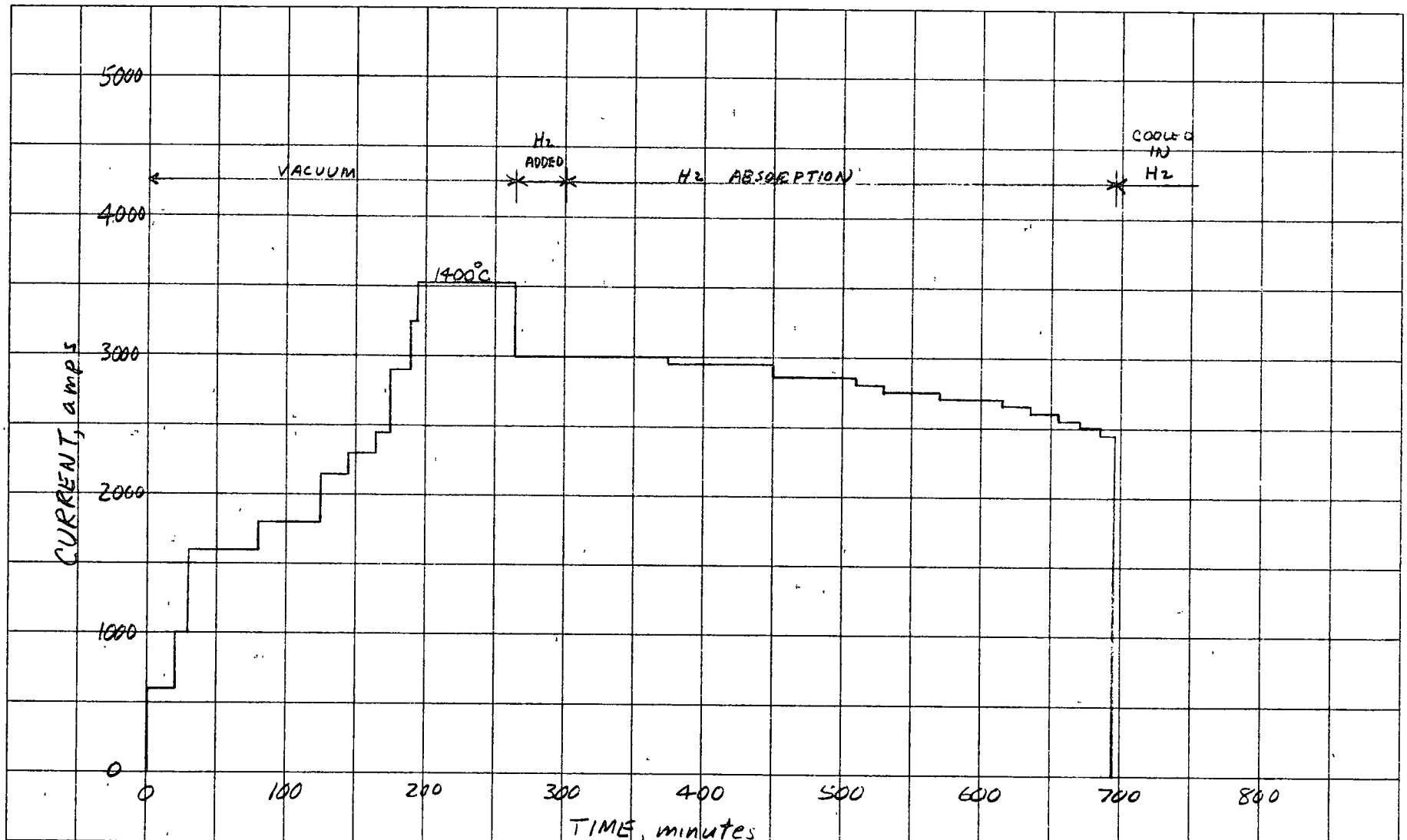

FIG. 5 HYDRIDING OF 25% Ta-75% Cb PRODUCTION ALLOY
5.75 LB. FURNACE CHARGE

NO 4520L 20X20 TO THE INCH

UCCNHT0000333

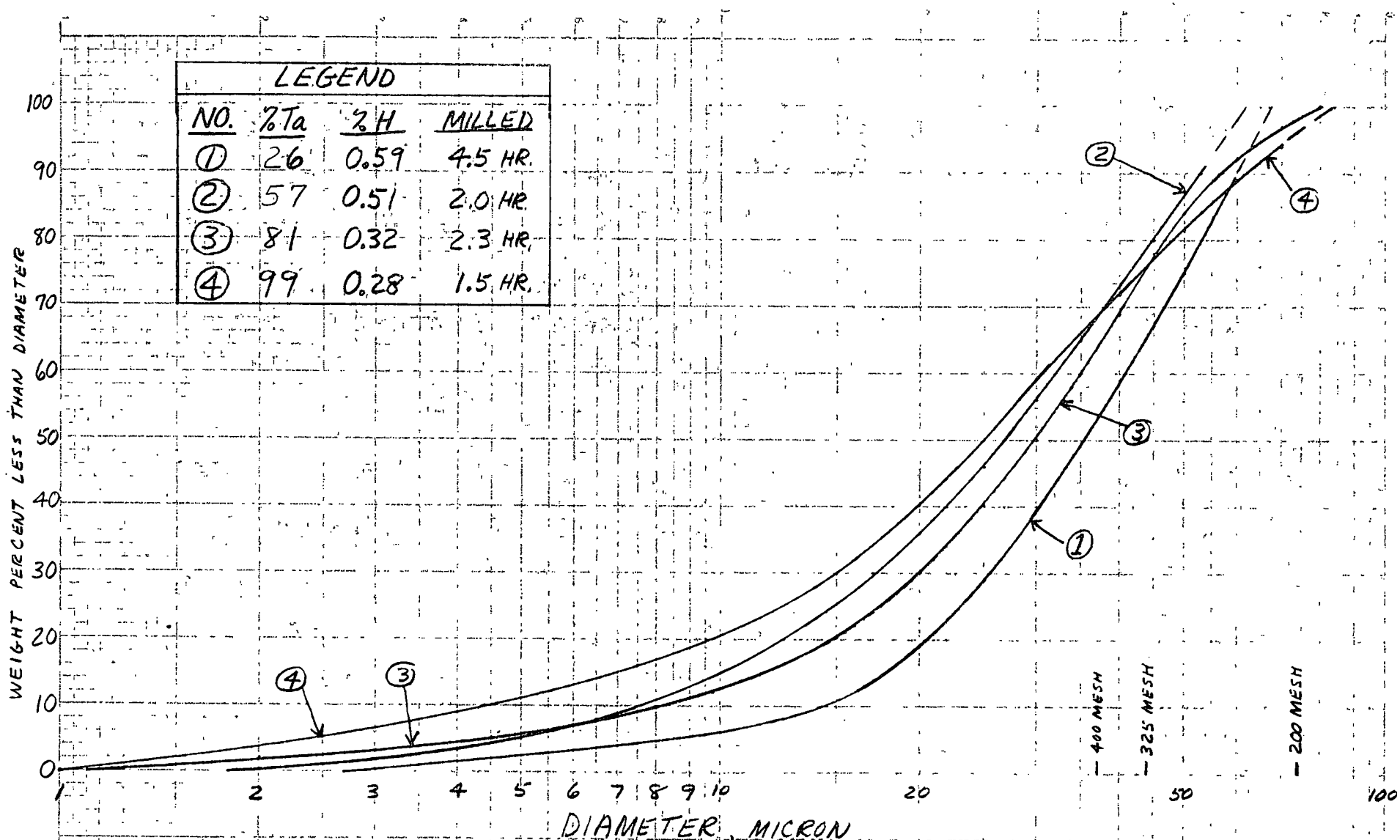

FIG. 6 MICROMEROGRAPH PARTICLE SIZE DISTRIBUTION OF -200 MESH HYDRIDED ALLOYS

UCCNHT0000334

APPENDIX

Calculation of Interdiffusion Coefficients

The temperature dependence of the self-diffusion coefficients of tantalum and columbium is as follows:

$$D_{Ta} = 2 \exp. \left[-110{,}000/RT\right] \qquad (2)$$

$$D_{Cb} = 12.4 \exp. \left[-105{,}000/RT\right] \qquad (3)$$

Darken[4] derived the following expression for the interdiffusion coefficient in binary alloys.

$$\tilde{D} = N_1 D_2 + N_2 D_1$$

where: $\tilde{D}$ = interdiffusion coefficient
N_1 = atom fraction of element 1
D_1 = intrinsic diffusion coefficient of element 1
N_2 = atom fraction of element 2
D_2 = intrinsic diffusion coefficient of element 2

For ideal solutions, the intrinsic diffusion coefficient is equal to the coefficient of self-diffusion as measured by the usual radioactive tracer technique. Thus, with the data available, it is possible to estimate the interdiffusion coefficients for tantalum-columbium binary alloys. The diffusion distance (x) in time (t) can then be calculated from

$$x^2 = 4 \tilde{D} t$$

which is an approximation of Fick's second law.

The calculated diffusivities at 1800, 2000, and 2200°C. are given in Table I-A for alloys containing 25, 50, and 75 weight per cent tantalum. Diffusivity is lowest for the 25% tantalum composition.

The diffusion distance required for homogenization during sintering can be estimated from the powder particle size. For -200 mesh powder, the maximum particle diameter is 7.4×10^{-3} cm. (74 microns). For dissimilar particles in contact, the required interdiffusion distance would be 3.7×10^{-3} cm. (37 microns). For the 25% tantalum alloy, this distance would require about 48 hours at 1800°C., five hours at 2000°C., and less than one hour at 2200°C.

---

(2) R. L. Eager and D. B. Langmuir, Phys. Rev. 89 (1953), 911
(3) R. Resnick et al., Sylvania Res. Labs, Report No. SEP-252 (March 30, 1959)
(4) L. S. Darken, Trans. AIME 175 (1948), 175

TABLE I-A

Calculated Diffusivity

Temperature			Diffusivity, $cm.^2/sec.$				
°C.	°K.	$10^4/T(°K)$	Ta	Cb	25 w/o Ta	50 w/o Ta	75 w/o Ta
1800	2073	4.82	5×10^{-12}	1.1×10^{-10}	2.02×10^{-11}	4.01×10^{-11}	6.8×10^{-11}
2000	2273	4.40	5×10^{-11}	1.0×10^{-9}	1.88×10^{-10}	3.68×10^{-10}	6.2×10^{-10}
2200	2473	4.04	3.7×10^{-10}	6.5×10^{-9}	1.26×10^{-9}	2.43×10^{-9}	4.05×10^{-9}

$$\log D_{Ta} = \log 2 - 110{,}000/4.575T = 0.301 - 24{,}050/T$$

$$\log D_{Cb} = \log 12.4 - 105{,}000/4.575T = 1.093 - 22{,}950/T$$

$$\tilde{D} = N_{Ta}D_{Cb} + N_{Cb}D_{Ta}$$

Dr. D M Gillies

Building 94

May 10, 1963

Technology Department
P O Box 580, Niagara Falls, N Y

Messrs. C M Brown (8)
E. A Clapp
H Lamprey
C R McKinsey
P McVicker
D Swan
MRL-File (6)

"Preparation of Tantalum-Columbium Alloy Powders," by C R McKinsey, Job Order No 840-95380-P, Technical Report No P-63-9, dated May 10, 1963

The enclosed technical report by C R. McKinsey describes the production of columbium-tantalum alloys for the Kemet Division of the Linde Company, to fill their purchase order No 233-41344, as sub-contractors under contract No NObsr 87478 between Linde-Kemet and the Navy Bureau of Ships.

The alloy powder produced met the Kemet specifications with respect to size and composition However, final nitrogen content was slightly high due to unidentified causes

Seven extra copies of the report are being sent to C. M Brown for transmission to Kemet.

G W Healy

GWH cew
Enc (1)

MAR 16 1981 CC: TASK FORCE

THE ASSEMBLY
STATE OF NEW YORK
ALBANY

ROBIN L SCHIMMINGER
140th District

3514 Delaware Avenue
Kenmore New York 14217
(716) 873-2540

Rm 452 Legislative Office Bldg
Albany New York 12248
(518) 455-5214

Linde Wells Update
March 1981

Dear Friend.

As you may know, on January 31, 1981, the New York State Assembly Task Force on Toxic Substances released an Interim Report which contained new information concerning the involvement of the federal government in the disposal of radioactively contaminated liquid wastes at the site of what is now the Linde Division of Union Carbide in our Town of Tonawanda In addition, the report documented that plant workers at various Manhattan Project and Atomic Energy Commission operations in the Niagara Frontier Region may have been exposed to excessive levels of radiation during the 1940's.

I wanted to take this opportunity to bring you up to date on the findings contained in that report, my reactions to it, and steps which are now being taken to meet the challenge of these findings.

To better understand the revelations contained in the Assembly report, it is helpful to know some of the background In June of 1942, President Franklin Roosevelt authorized the commencement of atomic energy research and development work which was to include the immediate design and construction of production plants to provide materials necessary for "atomic fission bombs". The project was dubbed the "Manhattan Project" and was formally referred to as the Manhattan Engineering District (MED), of the Army Corps of Engineers To provide the "feed materials" needed for the production of this new atomic weapon, the Manhattan Project began to procure large amounts of uranium bearing ores and convert them through various refinement stages into the feed materials for the manufacture of the atomic bomb.

The Linde Air Products Company in the Town was selected as a refining plant because of the expertise it had acquired from its work in the ceramics business, in which it processed uranium to produce certain substances for the coloring of ceramic glazes.

Linde's contract with the federal government called for it to operate a facility which would refine uranium ore in a series of three consecutive

steps. Only the first of those three steps relates directly to the dumping into the wells. In this first step, ordinary uranium ore was refined into uranium oxide (U_3O_8). Additional refinements were made in steps two and three and the product was then shipped to Electrometallurgical Company in Niagara Falls to be further processed through additional steps into uranium metal. The refining of uranium oxide began at Linde in July of 1943 and continued until the supply of low grade uranium ore became unavailable in mid-July of 1946.

The refinement process in "Step One" consisted of adding certain chemicals to the uranium ore to produce the uranium oxide. The waste products of this process consisted of highly caustic alkaline liquids containing primarily sodium sulfate and sodium carbonate, along with traces of uranium oxide which could not be captured The federal government pressed during these years to maintain top priority for the production of uranium metal as it was vital to the war effort and was needed for atomic fuel in the immediate post-war era. The present Linde Division management has emphasized that the Tonawanda Linde site was the only plant in the United States producing uranium oxide for the war effort and any delays could have set back the entire Manhattan Project. Five buildings were used on the Linde site as part of this operation. One building already existed, the other four were built by the federal government

Initially, the radioactively contaminated liquid wastes were discharged into the sanitary sewer system. However, the heavy alkaline nature of the radioactive waste-water made this prohibitive because the alkalinity destroyed bacteria in the sewage treatment plant process which was necessary for its operation When the Town threatened to close off all sewage services to the Linde site, the decision was made by the engineers for the Manhattan Project and Linde to pump the wastes into underground wells. At this time, the engineers expressly rejected the alternative of discharging the radioactive wastes into a storm sewer which emptied into an open ditch, running through a public park, into Two Mile Creek and eventually into the Niagara River. During the ensuing period, until July of 1946, over 37 million gallons of radioactively contaminated liquid chemical wastes were deposited into the wells on the Linde site. In fact, a recent statement from the present management of the Linde Division of Union Carbide indicates that a preliminary review of their records indicate that the actual quantity of the liquid waste disposal into the wells may have exceeded this figure

Significantly, during the period from April 1944 through July of 1946, there were occasions when the wells used for disposal became clogged and at these times the wastes were dumped directly into the storm sewer on the site, which eventually led to Two Mile Creek and the Niagara River. The report indicates that the amount of such discharges probably equalled the amount put into the wells. Initially, only one abandoned well was used at the site However, as production progressed, four additional wells had to be dug on the property for the same purpose.

While it was commonly known before the release of the Assembly report that Linde Air Products had been under contract with the federal government's Manhattan Project to produce materials necessary for the production of the atomic bomb, and while it was known that there has persisted some low levels of surface and building contamination at the site, the use of underground wells for disposal of radioactive liquid wastes and the use of the open storm sewer for the same purpose from April of 1944 through July of 1946 was information totally new to me and to the general public. It obviously created a legitimate sense of concern throughout the community. I was amazed that this information had never come to light given the numerous federal and state-federal interagency reports making reference to the Linde-Manhattan Project operation However, given the fact that much of the information secured by the Assembly Task Force investigators was contained in previously classified documents which were only uncovered using the Federal Freedom of Information Act, it is not that surprising

Despite criticism from some quarters as to the timing of the Task Force report and the manner of its release, it, nevertheless, did serve to bring some new and significant information to light. Knowing what we know now, it is imperative that we find out exactly how safe or unsafe the disposed liquid wastes are to us today. Many of us have lived in this community for decades since the dumping occurred without seeing any apparent widespread patterns of ill health effects, although the attention given to the revelations concerning the wells may now bring forth instances where illness could be linked to radioactivity. There is no question in my mind but that employees who worked at the Linde-Manhattan Project site during the war must have experienced sizeable levels of radioactive exposure However, this historic problem has been known for some time.

The present environmental and health impact of the radioactive liquid wastes disposed of in the underground wells is, at this point, impossible to determine Consequently, it is imperative that the appropriate federal agencies, the Departments of Energy and Defense, begin to drill, bore, and test to determine what, if anything, remains below the Linde site and its environs and to determine what danger, if any, there may be to area residents. Likewise, the path of the liquid wastes disposed of through the open storm sewer to the river should be tested to ensure that no dangers persist there. Because of this unique responsibility of the federal government to take action, due to the fact that its own Manhattan Project was responsible for the disposal methods in question, I have requested the Federal Departments of Energy and Defense to conduct a thorough study of exactly what remains of these wastes.

It is my understanding that the Federal Department of Energy has agreed to begin these tests as soon as the weather breaks this spring Furthermore, I have been advised by Linde that they will undertake limited testing on their own as quickly as possible to make some initial determinations as to the status of the underground wells Additionally, the Federal Department of Energy must, in conjunction with the Federal Department of Health and Human Services, conduct a comprehensive survey of the effects of

excessive exposure to radiation on the health of the civilian workers at the Manhattan Project site at Linde and elsewhere in the Niagara Frontier. The present management of the Linde Division of Union Carbide has agreed to cooperate in undertaking an evaluation of all employee health records and to perform an epidemiological study based on those records.

Finally, a few calming notes First, in my layman's view, I do not see how it would have been possible for any of these liquid wastes to have, even in the 1940's, contaminated our Town drinking supplies. The Town of Tonawanda draws its water from the Niagara River well upstream from both the Two Mile Creek and the location of the Linde wells. Additionally, the depth of the Linde wells, while shallow in comparison to many wells used for industrial waste disposal, were, nevertheless, significantly deeper than the water level in the Niagara River. In fact, the Town of Tonawanda engineer has assured all inquirers that there is absolutely no possible way that the Town water supplies could be contaminated due to this method of radioactive waste disposal

Secondly, we must always keep the term "radioactive contamination" in proper perspective. Almost everyone of us is exposed to some level of radioactivity every day of our lives The federal and state governments have been aware for many, many years that some low level radiation persisted at the Linde site, but that with proper precautions, it posed no hazard. In fact, a 1978 Final Report by the U S. Department of Energy had identified low level non-hazardous radioactive contamination on the Linde grounds and in certain Linde site buildings

Additionally, I think it is important to keep in mind exactly what these now much-talked-about liquid radioactive wastes embodied. They were principally sodium sulfate, sodium carbonate, and water They contained five one-hundredths of one percent (.05%) uranium oxide which was only the first product in the many steps of refining uranium ore into uranium metal. Hence, the radioactivity level was really quite slight in the liquid effluents.

While I am deeply concerned at the revelations contained in the Assembly report, I am not now alarmed over any threat of new health dangers due to the existence of the underground wells However, it is imperative that the appropriate technical agencies immediately ascertain what danger, if any, exists. I am in regular touch with both federal and state officials to ensure that proper follow-up is made regarding the Task Force report. My paramount goal will be to ensure the health and safety of the residents of this community and the former Linde-Manhattan Project workers, and to ensure that all the facts are brought into the open

Thank you for taking the time to read this update, as I think it sets things in a proper perspective.

Sincerely yours,

Robin Schimminger

ROBIN L SCHIMMINGER

Levels of U_3O_8 Generally Permitted by State of New York to be Discharged into Public Waters by Users of Radioactive Materials

Technical Supplement to remarks of Joseph R. Clark,
Vice President, Linde Division, Union Carbide Corporation,
delivered to public hearing of Erie County Department of Health
held in Kenmore, New York,
March 11, 1981

We have reported at this hearing that the concentration levels of uranium oxide contained in the liquid waste injected by the Linde Tonawanda Ceramics Plant into on-site wells in 1944-1946 during the performance of work for the U.S. Government on the Manhattan Project did not exceed the limits imposed today by the State of New York on the discharge of such radioactive material into public waters. This supplement provides the technical basis for that statement.

The currently effective concentration limit established by the State of New York for the discharge into public waters of liquid waste containing natural uranium is set forth in Paragraph 16.7(b)(1) of the State Sanitary Code and in Appendix 16-A, Table 4, Schedule II at the end of Chapter I of that Code. The limit is stated as 2×10^{-5} microcuries per milliliter ($\mu c/ml$) averaged over a period of one year. (There was, of course, no such limit in effect in 1944-46.) To convert this concentration to the more familiar concentration unit of parts per million, it is necessary to know the relationship between the radioactivity content and the weight of a given amount of natural uranium and to know the fraction of uranium contained in a given amount of the uranium oxide involved, U_3O_8.

The specific activity of natural uranium (the form of uranium that was contained in the liquid waste that was disposed of by the Ceramics Plant in 1944-46) is given in Title 10 of the Code of Federal Regulations, Part 20, Appendix B (in footnote 4 found on page 218 of the January 1, 1980 edition) as 6.77×10^{-5} curies per gram of natural uranium, which is equivalent to 0.677 microcuries per gram ($\mu c/gm$). The relative atomic weights of the constituents of U_3O_8 produced from natural uranium are 238 and 16 for the uranium and oxygen, respectively. Since each molecule of this form of uranium oxide contains three atoms of uranium and eight atoms of oxygen, its molecular weight is 842 and the fraction of each molecule comprised of uranium is .848. The conversion formula is then given by

$$U_3O_8 \text{ Concentration Limit} = 2 \times 10^{-5}\ \mu c/ml$$

$$= \frac{2 \times 10^{-5}\ \mu c/ml}{.677\ \mu c/gm \times .848}$$

$$= 3.48 \times 10^{-5}\ gm/ml$$

$$= 34.8 \times 10^{-5}\ gm/ml$$

$$= 34.8 \text{ parts per million (ppm)}$$

The available Ceramics Plant production data for the 113 weeks involved indicates that the average uranium oxide concentration of the liquid waste discharged into the disposal wells at Tonawanda in 1944-46 did not exceed 34.8 ppm over any one-year (i.e., consecutive 52-week) period.

UNCLASSIFIED ONLY

Department of Energy
Washington, D.C. 20545

19[illegible] 4 06

MSG NR 000768
(Communication Use Only)

Communications Center

Germantown, Maryland

THIS COVER SHEET IS FOR THE TRANSMITTAL OF UNCLASSIFIED MESSAGES ONLY

USE BLACK FELT TIP PEN ONLY

XEROX 200 TELECOPIER
FTS 233-3870
COMMERCIAL 301-353-3870

VERIFICATION
FTS 233-3486
COMMERCIAL 301-353-3486

REMOVE ALL STAPLES

FAX # 716-879-2038

DATE 3/10/81

TO. Vince Hayes, Linde Div., UCC N.Y. 716-879-2265
Name Location Telephone Nr

FROM. Robert Barber, DOE, WASH. D.C. 301-353-5028
Name Location Telephone Nr

THIS TRANSMITTAL CONSISTS OF 3 PAGES. (Excluding Cover Sheet)

I WANT ORIGINAL BACK YES ✓ NO

NAME Bob Barber EXT.: (For Pickup)

OR MAIL STOP EP-141 (If by MAIL)

THIS MESSAGE CONTAINS ONLY UNCLASSIFIED INFORMATION: Pat Nurner
SIGNATURE

UNCLASSIFIED ONLY

UCCNHT0000343

3/7/81 LINDE DIVISION, UCC, N.Y. GROUND-WATER SAMPLE RESULTS

SAMPLE 1 - LINDE GAS WELL NEAR BUILDING 77
2 - DUNLOP WELL
3 - LINDE WELL C AT 84.5'
4 - LINDE WELL C AT 89.'
5 LINDE WELL C AT 114.8'
6 LINDE WELL C AT 150'

ALL SAMPLES MARKED "A" (1A, 2A, 3A, 4A, 5A, 6A) ARE SUSPENDED SOLIDS
ALL SAMPLES MARKED "B" (1B, 2B, 3B, 4B, 5B, 6B) ARE DISSOLVED SOLIDS
CESIUM 137, THORIUM 232 CHAN, AND RADIUM 226 DONE BY GAMMA SPECTROSCOPY
URANIUM DONE BY FLUOROMETRIC ANALYSIS. (URANIUM IS ASSUMED TO BE NATURAL)

LIMITS FROM 0524 'STANDARDS FOR RADIATION PROTECTION'

CESIUM - ALL LEVELS TO BE TO WORRY ABOUT		
THORIUM 232 CHAN -	1 pCi/ml (soluble)	10 pCi/ml (insoluble)
RADIUM 226	.03 pCi/ml (soluble)	30 pCi/ml (insoluble)
URANIUM (NATURAL)	20 pCi/ml (soluble)	20 pCi/ml (insoluble)

1A	CESIUM 137	.03 pCi/g	
	THORIUM 232	< .04	
	RADIUM 226	.94 ± .07	.013 pCi/ml
	AVERAGE URANIUM	107.66	1.56
1B	^{137}Cs	.03 ± .02 pCi/g	
	^{232}Th (CHAN)	.18 ± .05	.0126 pCi/ml
	^{226}Ra	.24 ± .04	.017
	U	1.118	.078

4B	^{137}Cs	.1 ± .03 pCi/g	
	^{232}Th	<.06	
	^{226}Ra	<.02	<.0017 pCi/ml
	U	.517	<.0045
5A	^{137}Cs	<.03	
	^{232}Th	.61 ± .06	.006
	^{226}Ra	.58 ± .06	.006
	U	6.08	.064
5B	^{137}Cs	<.03	
	^{232}Th	.09 ± .04	.0001
	^{226}Ra	.04 ± .02	.0005
	U	.342	.0043
6A	^{137}Cs	<.03	
	^{232}Th	<.06	
	^{226}Ra	.34 ± .06	.0003
	U	12.234	.0113
6B	^{137}Cs	<.03	
	^{232}Th	<.06	
	^{226}Ra	<.02	<.0002
	U	.286	.0036

2A	^{137}Cs	<.03 pCi/g	
	^{232}Th	<.06	
	^{226}Ra	15 ± 8	.0003 pCi/ml
	(No U)		
2B	^{137}Cs	<.03 pCi/g	
	^{232}Th	<.06	
	^{226}Ra	<.02	
	(No U)		
3A	^{137}Cs	<.03 pCi/g	
	^{232}Th	<.02 ± .06	.027 pCi/ml
	^{226}Ra	.8 ± .07	.035
	U	5.94	.26
3B	^{137}Cs	.32 ± .06 pCi/g	
	^{232}Th	<.06	
	^{226}Ra	<.02	.000084 pCi/ml
	U	1.468	.006
4A	^{137}Cs	<.03 pCi/g	
	^{232}Th	.36 ± .07	.012 pCi/ml
	^{226}Ra	.43 ± .04	.014
	U	2.3	.076

UNCLASSIFIED ONLY

1981 MAR 11 AM 8 24

Department of Energy
Washington D.C. 20545

MSG NO 00778
(Communication Use Only)

URGENT

Communications Center

Germantown Maryland

THIS COVER SHEET IS FOR THE TRANSMITTAL OF UNCLASSIFIED MESSAGES ONLY

URGENT

XEROX 200 TELECOPIER
FTS 233 3870
COMMERCIAL 301 353 3870

VERIFICATION
FTS 233 3486
COMMERCIAL 301-353 3486

USE BLACK FELT TIP PEN ONLY

REMOVE ALL STAPLES

FAX - 716-879-2008

DATE 3/11/81

TO VINCE HAYES LINDE DIV. NY 716-879226
Name Location Telephone No

FROM ROBERT BARBER GERMANTOWN 353-2766
Name Location Telephone No

THIS TRANSMITTAL CONSISTS OF 2 PAGES (Excluding Cover Sheet)

I WANT ORIGINAL BACK YES YES NO

NAME GALE TURI EXT 353 2766 (For Pickup)

OR MAIL STOP EV 141 (If Pickup)

THIS MESSAGE CONTAINS ONLY UNCLASSIFIED INFORMATION Gale P. Turi
SIGNATURE

UNCLASSIFIED ONLY

UCCNHT0000347

SAMPLE		pCi/g	ppm	pCi/ml
4B	^{137}Cs	.1 ± .03		
	^{232}Th	< .06		
	^{226}Ra	< .02	$< .02 \times 10^{-6}$	< .00017
	U	.517	.74	.0045
5A	^{137}Cs	< .03		
	^{232}Th	.61 ± .06		.006
	^{226}Ra	.58 ± .06	$.59 \times 10^{-6}$	.006
	U	6.08	8.7	.064
5B	^{137}Cs	< .03		
	^{232}Th	.09 ± .04		.0001
	^{226}Ra	.04 ± .02	$.04 \times 10^{-6}$	.0005
	U	.342	.49	.0043
6A	^{137}Cs	< .03		
	^{232}Th	< .06		
	^{226}Ra	.34 ± .06	$.35 \times 10^{-6}$	.0003
	U	12.234	17.5	.0113
6B	^{137}Cs	< .03		
	^{232}Th	< .06		
	^{226}Ra	< .02	$.02 \times 10^{-6}$	.0002
	U	.286	.41	.0036

778/1

Sample		pCi/g	ppm	pCi/ml	ppm
1A	Cesium 137	.03			
	Thorium 232	< .06			
	Radium 226	.44 ± .07	$.46 \times 10^{-6}$	.013	$.013 \times 10^{-6}$
	Natural Uranium	107 ± 6	154.	154	2.3
1B	^{137}Cs	.03 ± 2			
	^{232}Th	.18 ± .05		.0126	
	^{226}Ra	.24 ± .04	$.24 \times 10^{-6}$	.017	$.017 \times 10^{-6}$
	U	1.118	1.62	.078	.115
2A	^{137}Cs	< .03			
	^{232}Th	< .06			
	^{226}Ra	15 ± 8	15.3×10^{-6}	.0003	$.3 \times 10^{-9}$
	U	< 14	< 2.0	< .0003	< .00004
2B	^{137}Cs	< .03			
	^{232}Th	< .06			
	^{226}Ra	< .02	$.02 \times 10^{-6}$		
	U	< .14	< .2	< .0002	< .0003
3A	^{137}Cs	< .03			
	^{232}Th	< .62 ± .06		.027	
	^{226}Ra	.8 ± .07	$.82 \times 10^{-6}$	.035	$.036 \times 10^{-6}$
	U	5.44	8.5	.26	.38
3B	^{137}Cs	.32 ± .06			
	^{232}Th	< .06			
	^{226}Ra	< .02	$.02 \times 10^{-6}$	.00084	$.084 \times 10^{-9}$
	U	1.48	2.1	.066	.009
4A	^{137}Cs	< .3			
	^{232}Th	[illegible]		[illegible]	
	^{226}Ra	.43 ± .04	$.44 \times 10^{-6}$	.014	$.014 \times 10^{-6}$
	[illegible]	[illegible]	[illegible]	[illegible]	[illegible]

UCCNHT0000349

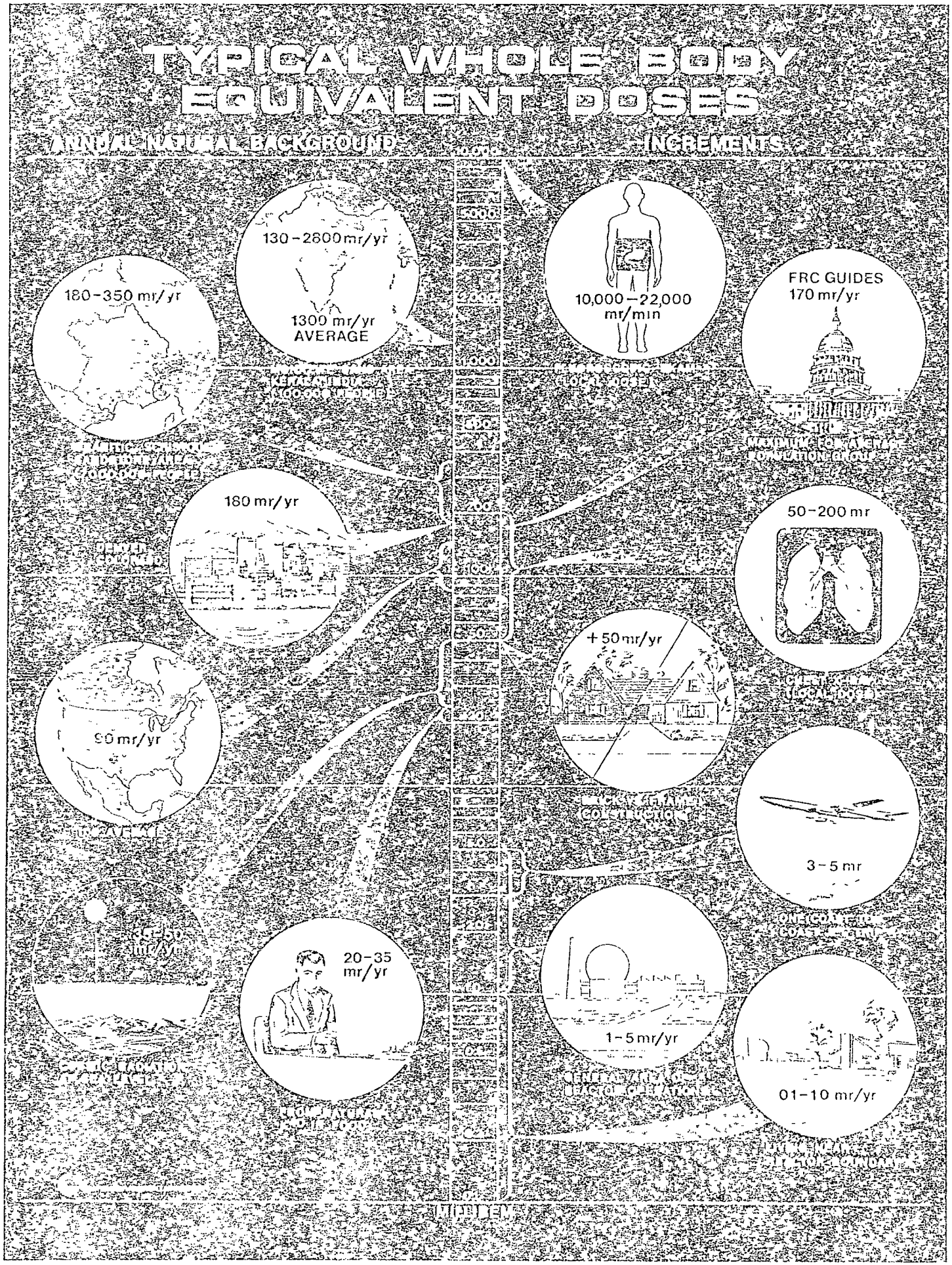

UCCNHT0000350

ANALYSIS OF SOIL - Preliminary Analysis of Radionuclide Concentration in Subsurface Soils and Formations Near Former Inspection Wells of Linde Air Products, Tonowanda, NY 3/10/81

		RADIONUCLIDE CONCENTRATION pci/gm				1 pci/gm ≅ 6 µg/m	REMARKS
Monitoring Well	Depth	Ra-226 (Bi214)	U-238 (a)	U-235 (b)	K-40	Th 232 (Ac 228)	
"C"	150 ft.	.14 ± .12	< 4.4	< .20	6.5 ± 1.2	.28 ± .12	
"C"	140 ft.	.60 ± .12	< 4.4	< .20	22.3 ± 2.2	.36 ± .20	
"C"	130 ft.	.72 ± .12	< 4.4	< .20	23.1 ± 2.1	.65 ± .21	
"C"	120 ft.	.88 ± .16	< 4.4	< .20	28.9 ± 2.7	.66 ± .31	
"C"	110 ft.	.87 ± .15	< 4.4	< .20	24.3 ± 2.5	.83 ± .26	
"C"	100 ft.	.51 ± .12	< 4.4	< .20	11.3 ± 1.7	.28 ± .24	
"C"	89 ft.	.30 ± .038	< 4.4	< .20	10.1 ± .51	.30 ± .07	
"C"	80 ft.	.35 ± .120	< 4.4	< .20	10.7 ± 1.7	.06 ± .14	
"C"	70 ft	1.1 ± .20	< 4.4	< .20	26.9 ± 2.9	1.5 ± .41	
"C"	60 ft.	.84 ± .16	< 4.4	< .20	19.9 ± 2.3	57 ± .32	
"C"	50 ft.	.91 ± .20	< 4.4	< .20	21.3 ± 3.1	.82 ± .35	
"C"	40 ft.	.90 ± .26	< 4.4	< .20	< .39	1.54 ± .50	
"C"	30 ft.	.72 ± .16	< 4.4	< .20	20.9 ± 2.4	1.0 ± .24	
"C"	20 ft.	1.2 ± .08	3.8 ± .66	.17 ± .03	18.6 ± 9.3	.87 ± .13	
"C"	10 ft.	1.0 ± .22	22.1 ± 1.33	1.0 ± .06	19.4 ± 2.7	1.1 ± .32	
,#2,#3	70 ft	.76 ± .18	< 4.4	< .20	27 ± 2.9	.95 ± .35	
,#2,#3	60 ft.	.98 ± .19	< 4.4	< .20	25.2 ± 2.6	.92 ± .36	
#2,#3	50 ft	.89 ± .07	26.5 ± .88	1.2 ± .04	.11 ± .02	1.24 ± .14	
#2,#3	40 ft.	.94 ± .16	< 4.4	< .20	.83 ± .11	1.2 ± .30	

UCCNHT0000351

ANALYSIS OF SOIL - Preliminary Analysis of Radionuclide Concentration in Subsurface Soils and Formations Near Former Inspection Wells of Linde Air Products, Tonowanda, NY 3/10/81

		RADIONUCLIDE CONCENTRATION pci/gm					REMARKS
tor ng lls	Depth	Ra-226 (Bi214)	U-238 (a)	U-235 (b)	K-40	Th 232 (Ac228)	
.#2	30 ft.	.85 ± .18	< 4.4	<.20	24.7 ± 2.7	1.02 ± .28	
,#3	20 ft.	.06 ± .04	9.9 ± 3.1	.45 ± .14	17.3 ± 2.0	.27 ± .20	
,#3	10 ft.	1.14 ± .07	2.65 ± .44	.12 ± .02	17.4 ± .79	.90 ± .11	
a)	Based on Uranium-235 concentration and assuming a natural uranium ratio.						
b)	186 Kev corrected for Ra226						
c)	MDA	.30		.20	.39	.05	
d)	x MDA	.10		.069	.13	.017	

UCCNHT0000352

HHJ

UNION CARBIDE

Will La France get a copy of our permit and any discussion on variances?

RECEIVED JUL 12 1965 CLEFINE MAC PA 301

Mr. G. G. Borden
Mining and Metals Division
P. O. Box 179
Marietta, Ohio

July 8, 1965

Mr. F. L. Evans/
Mr. A. H. Soeder
Mr. R. L. Folkman
Mr. B. J. Haley
Mr. W. R. Lewis (2)
Dr. K. S. Lane/Dr. J. J. Welsh

30/1 Ferrocolumbium
Brazilian Araxa Pyrochlore

Dear Mr. Borden:

Enclosed are the tabulated findings for in-plant exposure to radiation and radioactive materials and estimations of exposure in unrestricted areas during the furnacing, cleaning and crushing operations using Brazilian Araxa pyrochlore to make ferrocolumbium alloy. The stack samples used for estimation of unrestricted area exposure were collected by Mr. P. R. Sherman. Analysis of all samples for thorium and uranium were performed by the Nuclear Analysis Service at the Sterling Forest Research Laboratory.

The tables are arranged as those for the original Porter Brothers uranium bearing ore and should be kept as part of the permanent record as required by New York State regulations. Although uranium analyses were performed on all in-plant exposure samples, they are not reported since the amounts found would not significantly influence the exposure findings for thorium.

As can be seen, all exposures of personnel to air-borne radioactive particulates were well below the established limit for thorium. Exposures to external radiation in the normal processing steps were also well below limits. It would appear on the basis of these findings that coveralls would not be necessary. The use of respirators could be restricted to only those operations where much dust might be expected. In none of the operations observed and sampled did it appear necessary to wear them full time.

The purpose of the stack samples as required by our license is to assess the possible exposure of people to

stack effluents outside company property. If stack concentrations are less than the MPC for unrestricted areas, nothing else need be done. If, as in our case, they are higher, then it is necessary to take steps to determine that exposure in unrestricted areas is not hazardous. The usual method for doing this is to obtain air samples over long periods of time in these areas; however, since it was not possible in this case, we have resorted to computations. Because of the many variables involved, these may not necessarily be reliable. In our experience, however, for long-term averages, they tend to be conservative.

In view of the actual stack loss of thorium at point of exit, it may be necessary to provide a dust collection system for this furnace so that the possible exposure in unrestricted areas is reduced or eliminated.

The other consideration involved with this ore appears to be the problem of slag disposal. A condition of our present license indicates that the maximum amount of thorium that we may possess at any one time is 625 pounds. Since the ore contains about 2 percent thorium, this would amount to approximately 31,000 pounds of ore. Also with the slag running about 1.6 percent, we have the question of whether or not it is permissible to hold the slag as we have done in the past and then add to it each month. If we assume a melt schedule of 50,000 pounds of ore per month, we are exceeding the limit presently imposed by the license. I am aware that we have a burial exemption for this slag but do not know if you wish to take advantage of it. You might also wish to explore the possibility of sale of this slag to thorium metal users if an economical extraction process were available.

Very truly yours,

Leo J. LaFrance

Leo J. LaFrance
Industrial Hygienist

LJL:VM
Enclosures

Union Carbide Corporation
Olefins Division
Niagara Falls, New York

Thorium and Uranium Analyses

Material	% Thorium	% Uranium
Ore #28008 Brazilian Columbite from Brandies-Goldschmidtt 5/10/65	1.94	0.074
Ore #28214 Brazilian Columbite Lot 6344 from Phillips Brothers 5/14/65	1.92	0.042
FeCb 30/1 Final Metal Run 241 aggregate of taps 1-3 6/10/65	0.0009	0.0004
FeCb 30/1 Final Slag Run 241 aggregate of taps 1-3 6/10/65	1.58	0.065
Stack Effluent - during initial meltdown	0.41	0.015
during additions and cook-up	0.06	0.002

Union Carbide Corporation
Olefins Division
Niagara Falls, New York

(Furnacing Brazilian Columbite Lot 6344)

what is this

Sample Location	Operations	Date	Sample Type(1)	Sample Equipment	Thorium uc x 10^{-11}/cc(2)	Remarks
Bldg. 29-(C6F)						
Fce. deck at operating control panel west side	Putting mix into furnace and usual melt and pouring operations	6/9/65	BZ and GA	LV-1 Staplex with millipore filter	0.005	During 1st melt
"	"	"	"	"	0.004	During 2nd melt
Deck at south side of furnace	"	"	"	"	0.004	" (3)
Deck at north side of furnace	"	"	"	"	0.017	During 3rd melt (3)
By furnace control panel	"	"	"	"	0.004	"
Deck at north side about 15 feet from pouring lip	During pouring	"	"	"	0.021 Highest	Pouring 3rd melt (3)

(1) BZ - Breathing zone. GA - General air.
(2) MPC for natural thorium (40-hour week) - 3 x 10^{-11}uc/cc of air.
(3) These were breathing zone samples whenever operations were conducted at this side of the furnace. For other periods they would be classified as general air samples.

UCCNHT0000356

Union Carbide Corporation
Olefins Division
Niagara Falls, New York

Weighted Exposure to Air-borne Thorium
(Furnacing Brazilian Columbite Lot 6344)

Job-Furnace Operator | No. on Job -3 | Survey Period-June, 1965

General Location	Local Area	% Time (T)	Respirator Used	Ave. Conc. thorium uc x 10^{-11}/cc (C)	T x C
Bldg. 29-(CSP)					
Furnace deck at Fce. 29	At.Fce. controls	20	Yes	0.004	0.0008
	Around Fce. observing melt	17.5	Yes	0.004	0.0007
	Handling columbite ore	2.5	Yes	0.004	0.0001
	Charging super heat	2.5	Yes	0.017 Hesfort	0.0004
	Around Fce. deck during fce. cooling, etc.	45	No	0.004	0.0018
Lunch area, rest room, etc.		12.5	No	0.00	0.0000
		weighted exposure, uc x 10^{-11}/cc			0.0038

$$\text{For 40-hour week} = \frac{0.0038 \times 10^{-11}}{3.0 \times 10^{-11}} = 0.0013 \times \text{MPC}$$

Union Carbide Corporation
Olefins Division
Niagara Falls, New York

External Radiation Survey
(Furnacing Brazilian Columbite Lot 6344)

Instrument - Curtis-Wright Geiger Period - June, 1965

General Location	Local Areas	Gamma Readings mr/hour	Remarks
Bldg. 29-(COF)			
Furnace deck at Fec. 29	General background	0	
"	At surface of drums containing pyrochlor ore	1-3	Drums were closed and placed in furnace without opening.
"	At surface of pile of super heat addition containing pyrochlor ore	0.5-1	Not a point of continuous exposure.
"	Against furnace cover during melting	0.2	
"	At furnace control	0.1	
"	At furnace shell after melt	0.2	
Pouring floor	Surface of pot of melt	0.1	
	General area background	0.0	

Union Carbide Corporation
Olefins Division
Niagara Falls, New York

Weighted Exposure to External Radiation
(Melting of Brazilian Columbite Lot 6344)

Job-Furnace Operator[1] No. on Job-3 Survey Period-June, 1965

General Location	Local Areas	Time-Hours (T)	mr/hr (R)	T x R
Bldg. 29-(C6F)				
Fce. deck at #29	Placing drums in fce.	.75	3	2.25
"	Preparing super heat	.75	1	.75
"	Shoveling super heat into furnace	.75	1	.75
"	At furnace control around edge of furnace	5.0	0.2	1.00
Lunch room, rest areas, etc.	Other activities such as meal break, etc.	.75	0	0.00
		Total daily dose (mr)		4.75

Total dose for 40 hours = 5 x 4.75 = 23.75 mr.
maximum permissible dose = 100 mr/week
present dose = $\frac{23.75}{100}$ = .238 MPD (for a week)

[1] Doses of other personnel not computed as they were obviously not as great as the furnace operator.

Union Carbide Corporation
Clefins Division
Niagara Falls, New York

(Cleaning and Crushing Ferro-Columbium Alloy*)

Sample Location	Operation	Date	Sample Type(1)	Sample Equipment	Thorium uc x 10-11/cc(2)	Remarks
Bldg. 89-(C10P)						
Cleaning cage	Hand cleaning columbium alloy	6/15/65	BZ and GA(3)	LV-1 Staplex with milli-pore filter	0.021	Very difficult to break and clean alloy
Upper deck at feed hopper of crusher north end of building	Crushing cleaned alloy	"	" (3)	"	0.006	
Ground floor about 2 feet from receiving skip at crusher discharge	Crushing and sizing alloy	"	" (3)	"	0.013	

* Alloy made with Brazilian Columbite Lot 6344
(1) BZ - breathing zone. GA - general air.
(2) MPC for natural thorium (40-hour week) - 3×10^{-11} uc/cc of air.
(3) These were breathing zone samples while personnel carried out their necessary activity. At other periods they would be classed as general air samples.

UCCNHT0000360

Union Carbide Corporation
Olefins Division
Niagara Falls, New York

Weighted Exposure to Air-borne Thorium
(Cleaning and Crushing of Ferro-Columbium Alloy)*

Jobs-Cleaner — No. on Job-2
Crusher operator — No. on Job-2
Survey Period-June, 1965

Location + Job	% Time (T)	Respirator Used	Thorium uc x 10^{-11}/cc (C)	T x C
Cleaning cage (cleaner) while cleaning alloy	60	Yes	0.021	0.0126
other varied activity	40	No	0.000	0.0000
weighted exposure uc x 10^{-11}/cc				0.0126

For 40-hour week $\frac{0.0126 \times 10^{-11}}{3 \times 10^{-11}} = 0.0042$ MPC(1)

Crusher area (crusher operators)	12.5	Yes	0.010(av.)	0.0013
other activity	87.5	No	0.000	0.0000
weighted exposure uc x 10^{-11}/cc				0.0013

For 40-hour week $\frac{0.0013 \times 10^{-11}/cc}{3 \times 10^{-11}} = 0.0004$ MPC(1)

(1) MPC for thorium = 3 x 10^{-11} uc/cc of air

*Brazilian Columbite Lot 6344

Union Carbide Corporation
Olefins Division
Niagara Falls, New York

External Radiation Survey
(Cleaning and Crushing Ferro-Columbium Alloy)

Instrument-Curtis-Wright Geiger Period-June, 1965

General Location	Local Areas	Gamma Reading mr/hour	Remarks
Bldg. 89-(C10P)			
	General background in bldg.	0	
Cleaning cage	At surface of melt	0.1	
	At slag film surface	0.5-1.0	Thin slag coating
	At surface of clean alloy	0.1	
	Over slag container	0.5	Small pieces of slag
	Over remelt container	0.2	Slag and alloy
	At surface of cleaning table	0.1	
Crusher area	Edge of crusher feed	0.3	
	At crusher jaws after completion of job	0.0	
	At surface of receiving skip-ground floor	0.1	
Storage Pad for slag	At surface of slag	7-15	Not a point of exposure
	At distance of 5 feet from slag pile	1-3	This area roped off and posted

Union Carbide Corporation
Olefins Division
Niagara Falls, New York

Thorium in Stack Effluents
Production of Ferro-Columbium*

Average volume of Stack Gas during melt SCFM	21,700
Average concentration of thorium during melt in gms/ft3	2.3×10^{-4}
Average duration of melt in minutes	68
Average concentration of thorium during melt in uc x 10^{-10}/cc	9
Average concentration of thorium per 24 hours in uc x 10^{-10}/cc	2.06(1)
Calculated maximum average concentration of thorium per year, uc x 10^{-12}/cc	6(2)

(1) Based on 5.5 hours of melting time/24 hours.

(2) Calculated on the basis of probable 50 days' melting operation per year (1965).

MPC for unrestricted areas (average over year) for thorium is 10^{-12} uc/cc of air.

*Using Brazilian Columbite Lot 6344.

Union Carbide Corporation
Olefins Division
Niagara Falls, New York

Thorium in Stack Effluents
Production of Ferro-Columbium*

Average volume of Stack Gas during melt SCFM	21,700
Average concentration of thorium during melt in gms/ft3	2.3×10^{-4}
Average duration of melt in minutes	68
Average concentration of thorium during melt in uc x 10^{-10}/cc	9
Average concentration of thorium per 24 hours in uc x 10^{-10}/cc	2.06(1)
Calculated maximum average concentration of thorium per year, uc x 10^{-12}/cc	6(2)

(1) Based on 5.5 hours of melting time/24 hours.

(2) Calculated on the basis of probable 50 days' melting operation per year (1965).

MPC for unrestricted areas (average over year) for thorium is 10^{-12} uc/cc of air.

*Using Brazilian Columbite Lot 6344.

Note:

Unrestricted areas are areas not included within plant boundaries, or that admission to which is not controlled by the plant. The use of stack concentrations without allowance for outside air dilution therefore is not a true measure of average concentrations in unrestricted areas. In these areas the average concentration is always much lower than in the stack.

In an article by Merril Eisenbud and W. B. Harris of the Health and Safety Division, United States Atomic Energy Commission, New York Operations Office, published in the A.M.A. ARCHIVES OF INDUSTRIAL HYGIENE AND OCCUPATIONAL MEDICINE, January, 1951, the dispersal of stack gases and equations for defining this phenomenon are discussed. It is further shown that the equations are applicable to particulate emissions in which the particle sizes are of hygienic significance similar to those involved in the present operation. The equations and application are as follows:

$$C_{max} = \frac{2000\ QC_z}{e\pi h^2 u C_y} \quad (1)$$

where

C_{max} = maximum ground level concentration in mgs/m^3

Q = rate of emission in grams/sec. = 0.084 (based on emission rate for actual period of melting)

h = stack height in meters (assumed to be 25)

u = wind velocity in meters/sec. (assumed to be 1)

C_z, C_y = Diffusion coefficients. For this case it was assumed that $C_z = C_y = 0.12$

Further

$$X_{max} = \left(\frac{h^2}{C_z^2}\right) 0.57 \quad (2)$$

where

X_{max} = distance in meters from stack to the point of maximum concentration (C_{max}).

Substituting in equation (1)

$$C_{max} = \frac{2000 \times 0.084 \times .12}{2.718 \times 3.14 \times 625 \times 1 \times .12} = 0.0315 \text{ mg/m}^3$$

or 3×10^{-12} uc/cc

$$X_{max} = \left(\frac{625}{.0144}\right) .57 = 439 \text{ meters} = 1439 \text{ feet}$$

The quantity Cmax does not account for the fact the period of omission is only 5.5 hrs/24 hr day, or that the total operation might require only about fifty days. If those are taken into account, the annual average concentration would be approximately 9×10^{-14} uc/cc.

Copies: Messrs. F. L. Evans (2)
R. Job, Jr.
P. W. McDaniel
J. W. Norwood (2)
Dr. W. C. Roberts

TECHNOLOGY
DEPARTMENT

May 24, 1963

Mr. Cornelius F. Candee
New York State Department of Labor
252 Niagara Street
Buffalo 1, New York

Registration No. 0139

Dear Mr. Candee:

Enclosed are the tabulations of findings for exposure to radiation and radioactive materials and estimations of exposure in unrestricted areas during the processing at Union Carbide Metals Company of Porter Brothers' columbite ore containing uranium. Mr. Paul McDaniel of the Industrial Medicine and Toxicology Department of Union Carbide Corporation conducted the radiation surveys and found that exposures of personnel were much less than the maximum permissible. Exposures in unrestricted areas were also found not to be hazardous. A summary of the operation and precautions for handling the columbite are also enclosed. All the ore has been processed but no decision has yet been made about the disposal of the slag which contains the uranium. It is stored on a concrete pad, roped off, and posted with radiation warning signs. The slag is insoluble in water and poses no dust hazard.

The floor plan of the X-ray spectrographic laboratory of the Niagara Works is also enclosed. A survey of this room showed that the dose rate in areas in which the instrument operators work is less than 0.1 mr/hr. This highest area of radiation is at the closed shutter of the X-ray tube when the dose rate is 1.75 to 2.0 mr/hr. However, this area is quite inaccessible to the operator and poses no hazard.

Very truly yours,

John F. Langkau

John F. Langkau

JFL:ew
Enc.

UCCNHT0000367

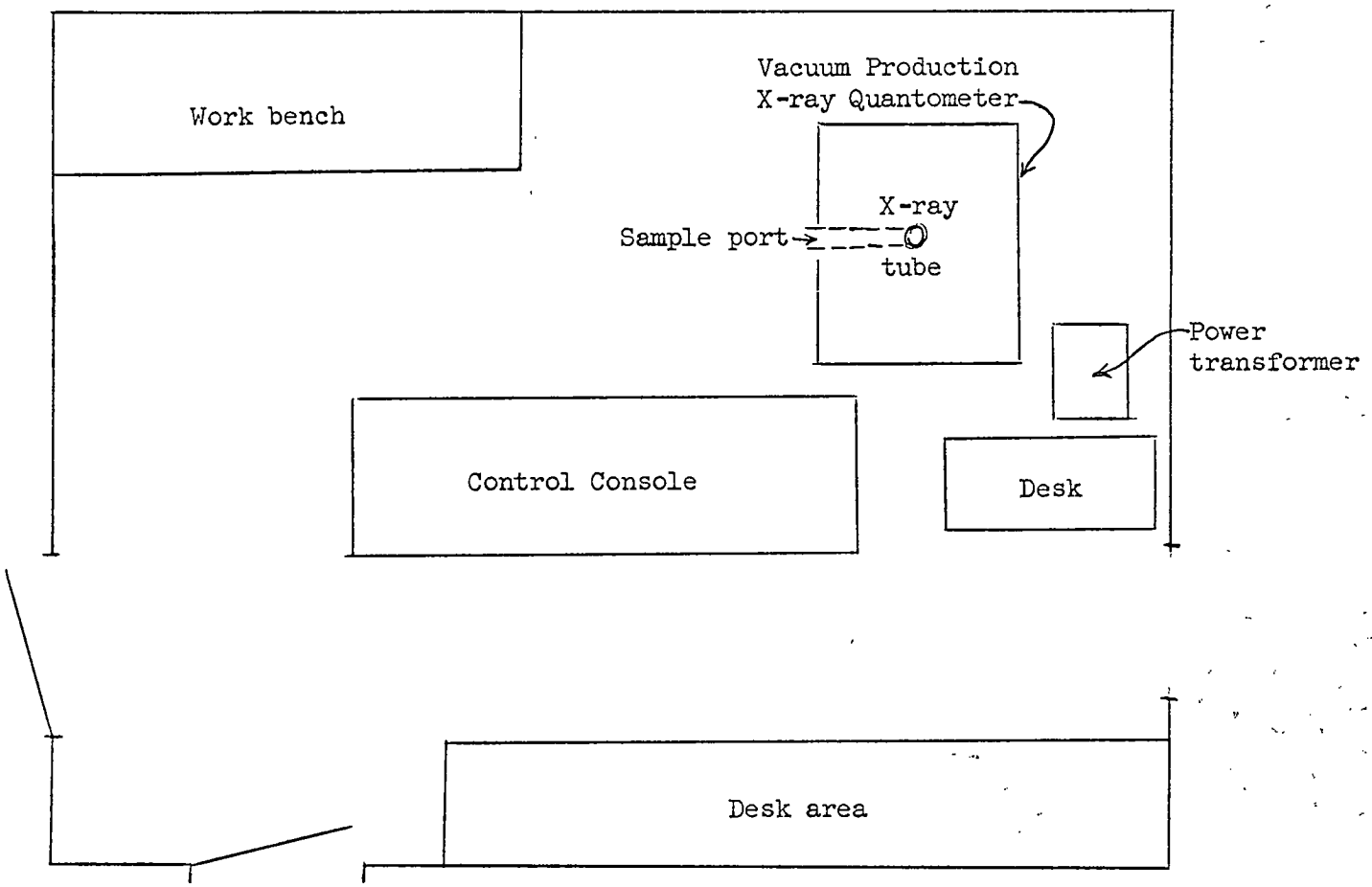

FLOOR PLAN OF THE X-RAY SPECTROGRAPHIC LABORATORY
OF THE NIAGARA WORKS LABORATORY,
UNION CARBIDE METALS COMPANY,
NIAGARA FALLS, NEW YORK

(5/23/63)

Niagara Falls, New York, May 14, 1963

Mr. John Langkav
Plant Radiation Officer
Union Carbide Metals Company
Niagara Falls, New York

Dear Mr. Langkav:

In late October 1961 we received approximately 80 net tons of Columbite Ore which had an average V_3O_8 content of approximately 1.00%.

This material was unloaded in our storage area in C5F, and this was then designated as a radiation area. The furnace crew, under supervision, opened each drum and obtained a representative sample for the lots of material. Our analysis indicated that certain impurities must be removed by furnacing before we could make salable alloy from this ore.

The material was furnaced, with these impurities being removed in the metal, but the Cb_2O_5, Ta_2O_5 and V_3O_8 remained in the slag. This slag was then crushed to 2" x D in C10P under Mr. Paul McDaniel's supervision, sampled and forwarded to our radiation area in C5F.

This material, then, in blend with other ores to balance certain impurities, was used in an alloy furnace to make salable alloy. The Cb_2O_5 and Ta_2O_5 were extracted and sold but the V_3O_8 remained in the slag.

The metal was checked for V_3O_8 content and it was found to be in the trace column as determined by the spectrograph. This indicates that the assay would be less than 0.01%.

There were approximately 260 heats made, with an average V_3O_8 content of 0.25% in the slag and an average weight of 2800 pounds. This slag was removed to our radiation area back of our laboratory awaiting disposal.

Very truly yours,

Paul J. Sitzenstatter

P.J.Sitzenstatter:P
Copy:Mr. S. Pishko

Mr. L. J LaFrance - 4th Floor

UNION CARBIDE CORPORATION
OLEFINS DIVISION
P O BOX 535, 137—47TH STREET, NIAGARA FALLS, NEW YORK

October 17, 1966

Mr. A Raymond
State of New York, Department of Health
Division Environmental Health Services
Bureau of Radiological Health Services
84 Holland Avenue
Albany, New York 12208

Subject: Exemption Burial

Dear Mr. Raymond:

Confirming our telephone conversation of October 14, 1966, - on May 28, 1965 we were granted an exemption to the provisions of Section 16.8 of Part 16 of the State Sanitary Code with respect to the total amount of radioactive material that may be buried at any one time.

At that time we estimated that we would be producing 50 net tons per month of slag containing 1.25% thorium. Since then, we have received some of the ore from Brazil and our analyses show the thorium content to be 2% We have also increased the amount of material to be processed, and the amount of slag to be generated to 50 gross ton per month.

Other than this, we intend to use the same burial plot and follow the same procedure of segregating the slag after a run, and notifying the Niagara County Health Department prior to burial, which we propose will still be once a month.

We request that our exemption burial permit be amended to cover these changed conditions.

Very truly yours,

Superintendent - Operations

AHSoeder ob

Copies. Mr. W. Freedman, Assistant Commissioner Environmental Health
Niagara County Health Dept - 525 Bewley Bldg., Lockport, N. Y

Mr. John A Meele, Senior Radiophysicist - Division of Industrial Hygiene,
State of New York, Department of Labor - 80 Centre St., New York, N. Y. 10013

Dr. A. Rosso - Division of Industrial Hygiene
State of New York, Department of Labor - 225 Niagara St., Buffalo 1, N Y.

OCT 18 1966
MEDICAL DEPT

UNION CARBIDE

Mr. A. H. Soeder
Olefins Division
P. O. Box 66
Niagara Falls, New York 14302

August 8, 1966

Medical

Dear Mr. Soeder:

The results for Thorium analyses on the ore samples submitted is as follows:

Sample #11195 - H6817
Araxa Columbite Ore Lot 121
Cargo sampled 150 drums 6/21/66
Analysis run in duplicate

% Thorium
2.23
2.26

The invoice from Sterling Forest is also enclosed.

Very truly yours,

Leo J. LaFrance
Industrial Hygienist

LJL/en

	% Th
11195 - H 6817	
Araxa columbite ore Lot 121	2.23
Cargo sampled 150 drums 6/21/66	2.26
34002	
FeCb 30/1	
Final slag FC 26A Tap 2	1.37
100 - 8817 - 265 7/21/66	1.53

ug/Th/m³	th ~~uc~~/cc	Limit 3×10⁻¹¹ uc/cc
1 - 160	1.7×10^{-11}	
2 - 3.4	0.004×10^{-11}	
3 - 24	0.03×10^{-11}	
4 - 214	2.4×10^{-11}	
7 - 2.4	0.003×10^{-11}	
11 - 24	0.03×10^{-11}	

UNION CARBIDE CORPORATION
OLEFINS DIVISION
P O BOX 66, 137—47TH STREET, NIACARA FALLS, NEW YORK

July 20, 1966

Dr. Morris Kleinfeld, Director
State of New York
Department of Labor
Division of Industrial Hygiene
80 Centre Street
New York, New York 10013

Dear Dr. Kleinfeld

Subject· New York State Radioactive Material
License No. 950-0139

On June 3, 1965 we received a radioactive license to possess 625 pounds of thorium. This license was necessary as we were proposing to process Brazilian Columbite Ores which contain thorium to produce ferrocolumbium which is essential to the Defense Effort Experimental heats were made last year and we determined that a dust collector was necessary. We have designed this collector and have conditional approval pending tests to be performed by the Division of Industrial Hygiene.

Prior original information showed that the ores would contain approximately 1% thorium and that we would be processing approximately 50,000# per month. Therefore, the 625# in our license was sufficient. We are now in violation of this license because of the delay in delivery of materials for the dust collection system and the preliminary analysis shows that the material contains at least 2% thorium. We now have 66,000# of material on hand at the Niagara Plant.

In addition to this, we are expecting a shipment of 50 gross ton of ore this week and another shipment of 50 gross ton has left Brazil and is now in an ocean freighter destined for the Niagara Plant.

In view of this we request that our license be amended to allow us to possess 6,000# of Thoria. This material after being processed will be disposed of as outlined in Mr Sherwood Davies' letter (subject· Exemption Burial) to me on May 28, 1965.

Our dust collection system is very nearly completed and we expect within the next week or so to request testing by the Division of Industrial Hygiene for approval of the installation

Our plans now call for processing 50 gross ton of this ore per month so that during normal operations we would expect to receive 50 gross ton per month which would be processed each month. However, with the restriction on disposal of once a month burial, we could conceivably have 50 gross ton of ore and 50 gross ton of slag on hand.

We urgently request an amendment to our license at your earliest convenience. If you desire further informarion, please advise.

Very truly yours,

A H Soeder/W

cc Mr Sherwood Davies
Dr Dudley A. Hill
Dr A Rosso

b/c Messrs. P J. Sitzenstatter
F. V. McMillen
P. McDaniel + L. LeFrance
J. H. Smallridge
R. L. Folkman
H. B. Parfet

UNION CARBIDE

INTERNAL CORRESPONDENCE

OLEFINS DIVISION

137 - 47th STREET, P O BOX 506, NIAGARA FALLS, NEW YORK 14302

To (Name) Mr. G. G. Borden
Company UCC - Mining and Metals Division
Location P.O. Box 179
Marietta, Ohio

Date November 5, 1965

Originating Dept

Answering letter date

Copy to Messrs. E. Bond
P. L. Folkman
F. L. Evans + R. D. Sutton
L. LaFrance
H. S. Sherman
N. D. Yale

Subject Conditional Notice of Approval
Nos. 26 and 29 Furnaces

Dear Mr. Borden:

Attached for your information is a copy of a conditional approval for the dust collectors on No. 26 and No. 29 furnaces to be used in processing radioactive columbium ores.

Engineering and Construction is proceeding with detailed plans and obtaining quotes for the dust collector. They are awaiting clarification of quotes from manufacturers before placing an actual order. It appears now that the best delivery we can expect will be twenty-two weeks with a minimum of four weeks installation after the collector arrives, providing all preliminary work is done before the collector arrives. Providing orders are placed next week, it appears we will not be ready to operate on Axara ore until late May.

Very truly yours,

A.H. Soeder

A.H.Soeder/W
Attachment

STATE OF NEW YORK
DEPARTMENT OF LABOR
DIVISION OF INDUSTRIAL HYGIENE
80 CENTRE STREET
NEW YORK, N Y 10013

ADDRESS REPLY TO
252 Niagara Street
Buffalo, N. Y. 14201
DATE November 3, 1965

Union Carbide Corp.
Olefins Division
P O. Box 596
Niagara Falls, New York

Att: Mr. H. S. Sherman, Asst. Supt.-Engineering & Maintenance

NOTICE OF PLAN APPROVAL (CONDITIONAL)

Plan No. BEP-188-65
Location of System 137 47th St., Niagara Falls
Ferro Alloy Smelting; Bldg. 29, Dept. C6F, 2nd Fl.

We are pleased to advise you that the plans you submitted to the Department of Labor for an exhaust system to be installed or altered have been approved.

[ ] One set of these plans is returned herewith.

[X] One set of these plans, and a notice of determination regarding compliance with the New York State Air Pollution Control Board's "Rules to Prevent New Air Pollution", will be forwarded to you by that Board.

The above CONDITIONAL approval is granted subject to the following:

1. Velocity and visual tests to be performed by the Division of Industrial Hygiene to determine effectiveness of control at hoods.

When the system has been installed or altered, and is ready for test, kindly notify the office of the Division of Industrial Safety Service at the following address New York State Department of Labor, Division of Industrial Safety Service, 65 Court St., Buffalo, N. Y. - Att: Mr. P. A. Sonner, Supervising Inspector.

This approval is based upon conformance to standards and requirements of the Labor Law and to the applicable industrial codes of the State of New York. You are responsible for determining whether emissions from the system meet the requirements of any local air pollution ordinances. If any alterations of or additions to the above system are required which would change its operating characteristics, it will be necessary for you to submit revised plans to the Division of Industrial Hygiene for approval prior to making such alterations or additions.

FR.ML
c/c JB PAS

Morris Kleinfeld

MORRIS KLEINFELD M D DIRECTOR
FOR THE COMMISSIONER

IH 223 (12 64) ENG

UCCNHT0000377

Works Manager's Department
P O Box 179, Marietta, Ohio
August 9, 1965

TO Messrs R L Folkman
A H Soeder

CC Messrs P C Fourney
L J LaFrance
J Winterhaler

RECEIVED
AUG 13 1965
INDUSTRIAL MEDICINE & TOXICOLOGY DEPARTMENT

Subject Columbium Oxide - Dust Collection System

Mr LaFrance's letter of July 8, 1965, conversations with the Niagara County Health Department, and the recent proposal of $100,000 for Capital funds for the installation of dust collection equipment on the furnace processing Araxa columbium ore bring the documented portion of this subject up to date Mr Folkman, by telephone on August 6, indicated production of FeCb in the future would use as a base either Araxa, Congo, or other ore which would contain thoria or other radioactive oxides Mr LaFrance, by telephone August 9, indicated that in order to conform with New York State regulations, dust collection equipment would be required, and he will write a letter stating that if we are to process radioactive bearing ores, satisfactory equipment must be installed

There are three basic justifications for the installation of this equipment which can be utilized to determine the economic evaluation of this proposed expenditure

1 The total or partial ore stocks available to support the current level of this operation, at the current price, contain radioactive oxides which require the dust collector The justification is based upon the protection of present markets and the profit on this market

2 The use of internal or lower priced ores which contain radioactive oxides The justification is based upon a savings in the price of ore or internal profit

3 The expansion in the columbium market which can only be done through the use of ores containing radioactive oxides

Mr Folkman must supply the figures necessary to calculate the justification for this expenditure and I would request that he supply the figures as quickly as possible I would also request that he supply the concentration of the radioactive oxides contained in the ores he is considering for purchase so we can be sure our proposed equipment will be adequate It is to be recognized that many columbium ores are associated with a radioactive oxide

Mr Soeder should, as quickly as possible, obtain a final proposal for this installation Mr Folkman has indicated that the installation can be readily justified and that, in fact some of the ores containing radioactive oxides may start to arrive

for processing early in 1966 I would assume this proposal would be included in the 1966 Working Budget Prior to final approval of this expenditure, approval must be obtained from the New York State Health Department of the proposed installation

I would appreciate it if both Messrs Folkman and Soeder would let me know when they would expect to complete their part of this capital expenditure request

GGB fae

G G Borden

INTERNAL CORRESPONDENCE

RECEIVED

JUL 16 1965

INDUSTRIAL MEDICINE & DEPARTMENT

MINING AND METALS DIVISION

P O BOX 179, MARIETTA, OHIO 45750

To (Name) Mr K C Graham
Division Union Carbide Corporation
Location Mining and Metals Division
Ashtabula, Ohio

Date July 13, 1965

Originating Dept. Works Manager's

Answering letter date

Copy to Messrs F L Evans
L. J LaFrance
A H. Soeder
J Winterhaler

Subject Radioactive Slag - Columbium Operation

A few years ago the Niagara plant processed some columbium ore which contained small quantities of uranium New York State and AEC licenses were required along with special precautions during the operations Mr McDaniel monitored the operations, and Mr. E J. Boyle, who was at Niagara at that time, and who was qualified by training in radioactivity, was designated as the security officer. The slag from this operation is currently being held in a pile behind the Engineering Department office at Niagara

Recently, we obtained permission from the New York State Health Department to process some Brazilian Araxa columbium ore which contains thoria The AEC is no longer in the picture, but we applied and received permission to (1) conduct the operation, (2) bury the slag containing the uranium from the old operation, and (3) bury the slag containing the thoria from the second operation The slag will be buried as prescribed in our old slag dump.

During the recent operation Mr. Leo J. LaFrance monitored the operation, and a copy of his report is attached. The operation of the Araxa ore was primarily to determine the characteristics of the ore and the problems with the thoria There are large quantities of this ore available for purchase After we had completed the test operation, we received word from the Niagara County Health Department that our test approval was, in fact, not valid, and they wanted to investigate our dust and fume collection system We sent them a sketch of the system and recently received word that they did not approve of the simple stack we had above the furnace. It is to be noted that Mr. LaFrance's test results and comments indicate concern over the same situation.

Mr. A H. Soeder is trying to resolve this question with his own group, the Engineering Department, the Niagara County Health Department and Mr LaFrance I assume, at the worst, we will be required to install some sort of dry dust collector so we can collect the dust and bury it.

I am guilty of not having kept you informed of these activities and know that you will not be disturbed since this is our normal procedure. I

don't think we can get too far out of line as we have so many people watching and instructing us, but I invite your participation as I feel this operation may present a new situation to you. There is nothing to be done now until the Niagara personnel present estimates of what is necessary to make the operation satisfactory so as to obtain State approval for the operation.

G G Borden

G G Borden

GGB/bw

Copy

STATE OF NEW YORK, DEPARTMENT OF LABOR

Division of Industrial Hygiene
80 Centre Street, New York 13, N.Y.

Registration No.
Date Registered

(SEE OVER FOR INSTRUCTIONS)

1 NAME OF OWNER (FIRM OR LESSEE)
Union Carbide Metals Company

2 ADDRESS IN FULL OF INSTALLATION
137 Forty-seventh Street

COUNTY
Niagara Falls, New York

2A. ADDRESS OF FIRM IF DIFFERENT FROM ABOVE

3. CONFINES OF INSTALLATION
Building 29, Building 77, and special storage dump on plant grounds.

4 INDUSTRY
Ferro-alloys

5 TOTAL NO. OF WORKERS EXPOSED TO RADIATION IN THIS INSTALLATION 18

6. ARE THE SOURCES NOW BEING REPORTED ON THIS FORM A PART OF AN INSTALLATION PREVIOUSLY REGISTERED WITH THE DIVISION OF INDUSTRIAL HYGIENE? ☐ YES ☒ NO IF YES, WHAT IS OUR REGISTRATION NUMBER FOR THAT INSTALLATION?

7 RADIATION PRODUCING EQUIPMENT (USE ADDITIONAL SHEETS IF NECESSARY)

a. Number Fixed	a. Number Mobile	b. Description of Each Radiation Producing Machine or Unit	c. Purpose or Use	d. No of Workers Exposed

EQUIPMENT

8 RADIOACTIVE MATERIALS (USE ADDITIONAL SHEETS IF NECESSARY)

a. Types	b. Fixed	b. Mobile	c. Sealed	c. Un-Sealed	d Source Strength (In Curies)	e Estimated Quantity Used Annualy (In Curies)	f. Maximum Quantity on Hand (In Curies)	g. Purpose or Use	h. No of Workers Exposed
Natural uranium contained in columbite ore concentrate		x		x	0.45	0.45	0.45	Impurity and by-product in smelting of a special columbite concentrate.	18

MATERIAL

9 NAME, TITLE AND BUSINESS ADDRESS OF PERSON IN CHARGE OF RADIATION PROTECTION
E. J. Boyle, Director-Development, Union Carbide Metals Co., Niagara Falls, N.Y

Qualifications Training and experience in handling radioactive material at A.E.C. installations at Oak Ridge, Tennessee.

Date

Signature of Person in Charge of Radiation Protection

UCCNHT0000382

INSTRUCTIONS FOR COMPLETION OF THIS FORM

(NUMBERS CORRESPOND TO ITEMS ON THE FRONT)

1. NAME OF OWNER Industrial Code Rule No. 38, "Radiation Protection", defines owner as, "The person or organization having by law the administrative control of a source of radiation. ., whether as proprietor, lessee or otherwise."

2. ADDRESS IN FULL· Number, street; village, town or city where the radiation equipment or material is usually used or stored. In rural areas give road intersections, highway number, etc. Furnish county in all cases.

3. CONFINES OF INSTALLATION: Industrial Code Rule No. 38 states, "The confines of an installation shall be as designated by the owner A part of a building, an entire building or a plant may be designated as an installation." An installation is defined as, "A location where for a period of more than 30 days one or more sources of radiation are used, operated or stored."

4. INDUSTRY. The principal product or type of activity at this location, e.g , ordnance mfg., printing, electrical machinery mfg., communications, banking, etc. If you know the Federal Government's Standard Industrial Classification for your plant, please give that Major Group Number also.

7. RADIATION PRODUCING EQUIPMENT Classify each piece of equipment being registered according to the general categories shown below. For each type of source indicate the quantity of fixed and/or mobile units by appropriate entries under column "a. Number". Describe under column "b" each type of source giving the specific information requested below In column "c" tell purpose of use of the equipment. For each type of source indicate the number of workers exposed to radioactivity by entries in column "d".

   X-RAYS. give the KVP and maximum tube current. Give purpose or use, e g., diagnostic (radiographic, fluoroscopic or both), therapeutic, industrial radiography of castings, fluorescence analysis, diffraction for crystallography, fluoroscopy of materials, thickness gauge.

   PARTICLE ACCELERATOR: give type, voltage and purpose or use, e.g , Betatron, 30 million volts, X-ray generation, Van de Graaf electrostatic accelerator, 10 million volts, acceleration of protons.

   HIGH VOLTAGE EQUIPMENT specify device and its use, e.g , Eidophone projection apparatus for theatre television, GE electron microscope for research, RCA Kenotron rectifier.

   STATIC ELIMINATORS give type and length of active face, e.g., Ionotron T-200, 24" long. Also tell briefly the types of machines on which installed or other use.

   PROCESS CONTROL DEVICES. list such equipment, e.g., Beta ray or Gamma ray thickness gauges, humidity gauges, vacuum gauges, etc. Give amount and type of radioactive element and the type of machine on which installed or other use.

   NUCLEAR REACTORS. give power in kilowatts and briefly describe type, e g., U-235 package power reactor, air cooled, U-238 homogeneous fast breeder pressurized water reactor, etc.

8. RADIOACTIVE MATERIALS. List types in column "a". Specify whether source is Fixed or Mobile, Sealed or Unsealed by check marks (X) in the applicable columns. Give strength on hand in column "d". Estimate the quantity of material to be used annually in column "e", and the maximum quantity on hand at any one time in column "f" All quantities of radioactive material should be expressed in curies. For example, Iodine 131, mobile, unsealed, .0005 curies now on hand, used annualy 1 curie, maximum on hand 01 curies, used as tracer, 6 exposed.

UCCNHT0000383