bp

BP America Production Company
Wamsutter Operations Center
P.O. Box 157
Wamsutter, WY 82336

October 26, 2017

NSR Program Manager
Attn: O&G Production Facilities
Wyoming Department of Environmental Quality
Air Quality Division
200 West 17th Street
Cheyenne, WY 82002

RECEIVED
NOV 1 - 2017
Office of Enforcement
Compliance & Environmental Justice

RE: **BP America Production Company**
NSPS Subpart OOOOa Annual Report
Wamsutter, WY

Dear Sir/Madam:

BP America Production Company (BP) is submitting this NSPS Subpart OOOOa Annual Report to fulfill the requirements of 40 CFR 60.5420a(b). Please find attached the necessary documentation for all NSPS OOOOa sources from 8/2/2016 to 8/2/2017. The emission sources included in this report are:

- Well completions
- Fugitive emissions
- Pneumatic Pumps
- Storage vessels

If you have any questions regarding this report, please do not hesitate to contact Kishan Koniki, the air specialist responsible for this report, by phone at (281) 892-6059 or by email at kishan.koniki@bp.com.

Based on information and belief formed after reasonable inquiry, the statements and information in the attached document are true, accurate, and complete.

Sincerely,

(b) (6)
[redacted]

Cc: USEPA Region 8

BP America Production Company
Wamsutter, WY
NSPS Subpart OOOOa Annual Report
Well Completions

		§60.5432a Low Pressure Wells	All Well Completions					
United States Well Number* (§60.5420a(b)(1)(ii))	Records of deviations where well completion operations with hydraulic fracturing were not performed in compliance with the requirements specified in § 60.5375a. * (§60.5420a(b)(2)(ii) and §60.5420a(c)(1)(ii))	Please provide the file name that contains the Record of Determination and Supporting Inputs and Calculations * (§60.5420a(b)(2)(iii) and §60.5420a(c)(1)(vii)) Please provide only one file per record.	Well Completion ID * (§60.5420a(b)(2)(i) and §60.5420a(c)(1)(i))	Well Location * (§60.5420a(b)(2)(i) and §60.5420a(c)(1)(iii)(A)-(B))	Date of Onset of Flowback Following Hydraulic Fracturing or Refracturing * (§60.5420a(b)(2)(i) and §60.5420a(c)(1)(iii)(A)-(B))	Time of Onset of Flowback Following Hydraulic Fracturing or Refracturing * (§60.5420a(b)(2)(i) and §60.5420a(c)(1)(iii)(A)-(B))	Date of Each Attempt to Direct Flowback to a Separator * (§60.5420a(b)(2)(i) and §60.5420a(c)(1)(iii)(A)-(B))	Time of Each Attempt to Direct Flowback to a Separator * (§60.5420a(b)(2)(i) and §60.5420a(c)(1)(iii)(A)-(B))
49-007-24582	Not applicable	Not applicable	Baldy Butte 19-80H	Latitude: 41.437699 (b) (9) [redacted]	2/14/2017	1:00 AM	2/17/2017	2:00 PM
49-037-29514	Not applicable	Not applicable	Champlin 320 C 1-140H 1-160H					
49-037-29490	Not applicable	Not applicable	Chain Lakes 29-50D		10/31/2016	1:30 AM	10/31/2016	11:00 AM
49-037-29492	Not applicable	Not applicable	Chain Lakes 29-160		10/31/2016	4:31 AM	11/1/2016	9:21 AM
49-037-29491	Not applicable	Not applicable	Chain Lakes 29-130		11/3/2016	8:00 AM	11/4/2016	4:00 AM
49-037-29443	Not applicable	Not applicable	Latham Draw 19-90		12/5/2016	9:00 PM	12/8/2016	12:00 PM
49-037-29432	Not applicable	Not applicable	Latham Draw 29-130		12/7/2016	1:00 AM	12/8/2016	3:00 PM
49-007-24603	Not applicable	Not applicable	High Point 13-85D					
49-007-24604	Not applicable	Not applicable	Hight Point 13-90D					
49-007-24576	Not applicable	Not applicable	High Point 13-160D					
49-037-29519	Not applicable	Not applicable	Monument Lake 11-160D					
49-037-29548	Not applicable	Not applicable	Chain Lakes 29-150					
49-037-29547	Not applicable	Not applicable	Chain Lakes 29-155					
49-037-29468	Not applicable	Not applicable	Champlin 452 K29-150H					
49-007-24584	Not applicable	Not applicable	High Point 13-150/155 H					

BP America Production Company
Wamsutter, WY
NSPS Subpart OOOOa Annual Report
Well Completions

	Well Affected Facilities Required to Comply with §60.5375a(a) and §60.5375a(f)							
United States Well Number* (§60.5420a(b)(1)(ii))	Date of Each Occurrence of Returning to the Initial Flowback Stage * (§60.5420a(b)(2)(i) and §60.5420a(c)(1)(iii)(A)-(B))	Time of Each Occurrence of Returning to the Initial Flowback Stage * (§60.5420a(b)(2)(i) and §60.5420a(c)(1)(iii)(A)-(B))	Date Well Shut In and Flowback Equipment Permanently Disconnected or the Startup of Production * (§60.5420a(b)(2)(i) and §60.5420a(c)(1)(iii)(A)-(B))	Time Well Shut In and Flowback Equipment Permanently Disconnected or the Startup of Production * (§60.5420a(b)(2)(i) and §60.5420a(c)(1)(iii)(A)-(B))	Duration of Flowback in Hours * (§60.5420a(b)(2)(i) and §60.5420a(c)(1)(iii)(A)-(B))	Duration of Recovery in Hours * *(Not Required for Wells Complying with §60.5375a(f))* (§60.5420a(b)(2)(i) and §60.5420a(c)(1)(iii)(A))	Disposition of Recovery * (§60.5420a(b)(2)(i) and §60.5420a(c)(1)(iii)(A)-(B))	Duration of Combustion in Hours * (§60.5420a(b)(2)(i) and §60.5420a(c)(1)(iii)(A)-(B))
49-007-24582	Not applicable	Not applicable	2/18/2017	12:00 PM	527	196	Recovery to sales	0
49-037-29514								
49-037-29490	Not applicable	Not applicable	10/31/2016	11:00 AM	1390.5	1184	Recovery to sales	0
49-037-29492	Not applicable	Not applicable	11/1/2016	9:21 AM	1387.4	520	Recovery to sales	0
49-037-29491	Not applicable	Not applicable	11/4/2016	4:00 AM	1312	978	Recovery to sales	0
49-037-29443	Not applicable	Not applicable	12/8/2016	12:00 PM	104	40	Recovery to sales	0
49-037-29432	Not applicable	Not applicable	12/8/2016	3:00 PM	76	37	Recovery to sales	0
49-007-24603								
49-007-24604								
49-007-24576								
49-037-29519								
49-037-29548								
49-037-29547								
49-037-29468								
49-007-24584								

BP America Production Company
Wamsutter, WY
NSPS Subpart OOOOa Annual Report
Well Completions

United States Well Number* (§60.5420a(b)(1)(ii))	Duration of Venting in Hours * (§60.5420a(b)(2)(i) and §60.5420a(c)(1)(iii)(A)-(B))	Reason for Venting in lieu of Capture or Combustion * (§60.5420a(b)(2)(i) and §60.5420a(c)(1)(iii)(A)-(B))	**Well Affected Facilities Required to Comply with Both §60.5375a(a)(1) and (3) Using a Digital Photo in lieu of Records Required by §60.5420a(c)(1)(i) through (iv)**
49-007-24582	0	Not applicable	
49-037-29514			Photo attached
49-037-29490	0	Not applicable	
49-037-29492	0	Not applicable	
49-037-29491	0	Not applicable	
49-037-29443	0	Not applicable	
49-037-29432	0	Not applicable	
49-007-24603			Photo attached
49-007-24604			Photo attached
49-007-24576			Photo attached
49-037-29519			Photo attached
49-037-29548			Photo attached
49-037-29547			Photo attached
49-037-29468			Photo attached
49-007-24584			Photo attached

BP America Production Company
Wamsutter, WY
NSPS Subpart OOOOa Annual Report
Fugitive Emissions Components

Identification of Each Affected Facility * (§60.5420a(b)(1))	Date of Survey * (§60.5420a(b)(7)(i))	Survey Begin Time * (§60.5420a(b)(7)(ii))	Survey End Time * (§60.5420a(b)(7)(ii))	Name of Surveyor * (§60.5420a(b)(7)(iii))	Ambient Temperature During Survey * (§60.5420a(b)(7)(iv))	Sky Conditions During Survey * (§60.5420a(b)(7)(iv))	Maximum Wind Speed During Survey * (§60.5420a(b)(7)(iv))	Monitoring Instrument Used * (§60.5420a(b)(7)(v))	Deviations From Monitoring Plan (If none, state none.) * (§60.5420a(b)(7)(vi))
High Point 23-80d Pad	5/30/2017	11:00:00 AM	11:10:00 AM	David Bartles	58	Partly Cloudy	3 mph	FLIR G320	None
High Point 13-85d Pad	5/30/2017	11:50:00 AM	11:57:00 AM	David Bartles	65	Partly Cloudy	5 mph	FLIR G320	None
Baldy Butte 19-80H	5/30/2017	1:36:00 PM	1:47:00 PM	David Bartles	65	Partly Cloudy	5 mph	FLIR G320	None
Latham Draw 19-90	6/1/2017	8:31:00 AM	8:40:00 AM	David Bartles	59	Clear	10 mph	FLIR G320	None
Tierney II Unit 5-150H	6/1/2017	9:15:00 AM	9:27:00 AM	David Bartles	61	Clear	10 mph	FLIR G320	None
Monument Lake 11-160D	6/1/2017	11:50:00 AM	12:00:00 PM	David Bartles	73	Clear	5 mph	FLIR G320	None
Monument Lake 11-50D Pad	6/1/2017	12:15:00 PM	12:30:00 PM	David Bartles	73	Clear	5 mph	FLIR G320	None
Monument Lake 11-1	6/1/2017	12:45:00 PM	1:00:00 PM	David Bartles	73	Clear	5 mph	FLIR G320	None
Monument Lake 9-1	6/1/2017	1:00:00 PM	1:10:00 PM	David Bartles	74	Clear	5 mph	FLIR G320	None
Battle Springs 23-1	6/1/2017	1:30:00 PM	2:15:00 PM	David Bartles	76	Rainy	5 mph	FLIR G320	None
Luman 10-40H Pad	6/1/2017	2:30:00 PM	3:00:00 PM	David Bartles	76	Rainy	5 mph	FLIR G320	None
Champlin 320 1-160H/140H	6/1/2017	3:05:00 PM	3:23:00 PM	David Bartles	69	Rainy	5 mph	FLIR G320	None
Luman 17-80	6/1/2017	3:40:00 PM	3:57:00 PM	David Bartles	73	Partly Cloudy	5 mph	FLIR G320	None
Luman 17-160	6/1/2017	3:50:00 PM	3:57:00 PM	David Bartles	73	Partly Cloudy	5 mph	FLIR G320	None

BP America Production Company
Wamsutter, WY
NSPS Subpart OOOOa Annual Report
Fugitive Emissions Components

(b)(6)

Identification of Each Affected Facility * (§60.5420a(b)(1))	Type of Component for which Fugitive Emissions Detected * (§60.5420a(b)(7)(vii))	Number of Each Component Type for which Fugitive Emissions Detected * (§60.5420a(b)(7)(vii))	Type of Component Not Repaired as Required in §60.5397a(h) * (§60.5420a(b)(7)(viii))	Number of Each Component Type Not Repaired as Required in § 60.5397a(h) * (§60.5420a(b)(7)(viii))	Type of Difficult-to-Monitor Components Monitored * (§60.5420a(b)(7)(ix))	Number of Each Difficult-to-Monitor Component Type Monitored * (§60.5420a(b)(7)(ix))	Type of Unsafe-to-Monitor Component Monitored * (§60.5420a(b)(7)(ix))	Number of Each Unsafe-to-Monitor Component Type Monitored * (§60.5420a(b)(7)(ix))	Date of Successful Repair of Fugitive Emissions Component * (§60.5420a(b)(7)(x))
High Point 23-80d Pad	None	Not applicable	None	None	Not applicable	None	Not applicable	None	Not applicable
High Point 13-85d Pad	None	Not applicable	None	None	Not applicable	None	Not applicable	None	Not applicable
Baldy Butte 19-80H	None	Not applicable	None	None	Not applicable	None	Not applicable	None	Not applicable
Latham Draw 19-90	None	Not applicable	None	None	Not applicable	None	Not applicable	None	Not applicable
Tierney II Unit 5-150H	None	Not applicable	None	None	Not applicable	None	Not applicable	None	Not applicable
Monument Lake 11-160D	None	Not applicable	None	None	Not applicable	None	Not applicable	None	Not applicable
Monument Lake 11-50D Pad	None	Not applicable	None	None	Not applicable	None	Not applicable	None	Not applicable
Monument Lake 11-1	None	Not applicable	None	None	Not applicable	None	Not applicable	None	Not applicable
Monument Lake 9-1	None	Not applicable	None	None	Not applicable	None	Not applicable	None	Not applicable
Battle Springs 23-1	None	Not applicable	None	None	Not applicable	None	Not applicable	None	Not applicable
Luman 10-40H Pad	None	Not applicable	None	None	Not applicable	None	Not applicable	None	Not applicable
Champlin 320 1-160H/140H	None	Not applicable	None	None	Not applicable	None	Not applicable	None	Not applicable
Luman 17-80	None	Not applicable	None	None	Not applicable	None	Not applicable	None	Not applicable
Luman 17-160	None	Not applicable	None	None	Not applicable	None	Not applicable	None	Not applicable

BP America Production Company
Wamsutter, WY
NSPS Subpart OOOOa Annual Report
Fugitive Emissions Components

Identification of Each Affected Facility * (§60.5420a(b)(1))	Type of Component Placed on Delay of Repair * (§60.5420a(b)(7)(xi))	Number of Each Component Type Placed on Delay of Repair * (§60.5420a(b)(7)(xi))	Explanation for Delay of Repair * (§60.5420a(b)(7)(xi))	Type of Instrument Used to Resurvey Repaired Components Not Repaired During Original Survey * (§60.5420a(b)(7)(xii))	Training and Experience of Surveyor * (§60.5420a(b)(7)(iii))	Was a monitoring survey waived under § 60.5397a(g)(5)? * (§60.5420a(b)(7))	If a monitoring survey was waived, the calendar months that make up the quarterly monitoring period for which the monitoring survey was waived. * (§60.5420a(b)(7))
High Point 23-80d Pad	Not applicable	None	Not applicable	Not applicable	Has attended training provided by FLIR.	No	Not applicable
High Point 13-85d Pad	Not applicable	None	Not applicable	Not applicable	Has attended training provided by FLIR.	No	Not applicable
Baldy Butte 19-80H	Not applicable	None	Not applicable	Not applicable	Has attended training provided by FLIR.	No	Not applicable
Latham Draw 19-90	Not applicable	None	Not applicable	Not applicable	Has attended training provided by FLIR.	No	Not applicable
Tierney II Unit 5-150H	Not applicable	None	Not applicable	Not applicable	Has attended training provided by FLIR.	No	Not applicable
Monument Lake 11-160D	Not applicable	None	Not applicable	Not applicable	Has attended training provided by FLIR.	No	Not applicable
Monument Lake 11-50D Pad	Not applicable	None	Not applicable	Not applicable	Has attended training provided by FLIR.	No	Not applicable
Monument Lake 11-1	Not applicable	None	Not applicable	Not applicable	Has attended training provided by FLIR.	No	Not applicable
Monument Lake 9-1	Not applicable	None	Not applicable	Not applicable	Has attended training provided by FLIR.	No	Not applicable
Battle Springs 23-1	Not applicable	None	Not applicable	Not applicable	Has attended training provided by FLIR.	No	Not applicable
Luman 10-40H Pad	Not applicable	None	Not applicable	Not applicable	Has attended training provided by FLIR.	No	Not applicable
Champlin 320 1-160H/140H	Not applicable	None	Not applicable	Not applicable	Has attended training provided by FLIR.	No	Not applicable
Luman 17-80	Not applicable	None	Not applicable	Not applicable	Has attended training provided by FLIR.	No	Not applicable
Luman 17-160	Not applicable	None	Not applicable	Not applicable	Has attended training provided by FLIR.	No	Not applicable

BP America Production Company
Wamsutter, WY
NSPS Subpart OOOOa Annual Report
Pneumatic Pumps

					Pneumatic Pumps Previously Reported that have a Change in Reported Condition				
Well Name	Identification of Each Pump * (§60.5420a(b)(1))	Was the pneumatic pump constructed, modified, or reconstructed during the reporting period? * (§60.5420a(b)(8)(i))	Which condition does the pneumatic pump meet? * (§60.5420a(b)(8)(i))	If your route emissions to a control device and the control device is designed to achieve <95% emissions reduction, specify the percent emissions reduction. * (§60.5420a(b)(8)(i)(C))	Identification of Each Pump * (§60.5420a(b)(8)(ii))	Date Previously Reported* (§60.5420a(b)(8)(ii))	Which condition does the pneumatic pump meet? * (§60.5420a(b)(8)(ii))	If you now route emissions to a control device and the control device is designed to achieve <95% emissions reduction, specify the percent emissions reduction. * (§60.5420a(b)(8)(ii) and §60.5420a(b)(8)(i)(C))	Records of deviations where the pneumatic pump was not operated in compliance with requirements* (§60.5420a(b)(8)(iii) and §60.5420a(c)(16)(ii))
Baldy Butte 19-80	3pumps	Constructed	Emission are routed to a control device	98%	Not applicable				None
Battle Springs 23-1	2pumps	Constructed	Emission are routed to a control device	98%	Not applicable				None
CG Road 10-90D	1pumps	Constructed	Emission are routed to a control device	98%	Not applicable				None
CG Road 2-110 PAD	1pumps	Constructed	Emission are routed to a control device	98%	Not applicable				None
CG Road 35-10	1pumps	Constructed	Emission are routed to a control device	98%	Not applicable				None
CG Road UNIT 11-30D	1pumps	Constructed	Emission are routed to a control device	98%	Not applicable				None
CG Road UNIT 25-10D	1pumps	Constructed	Emission are routed to a control device	98%	Not applicable				None
CG Road Unit 35-10d	1pumps	Constructed	Emission are routed to a control device	98%	Not applicable				None
Chain lakes 29-50d Pad	2pumps	Constructed	Emission are routed to a control device	98%	Not applicable				None
Chain Lakes 29-150H/155H	4pumps	Constructed	Emission are routed to a control device	98%	Not applicable				None
Champlin 222 F9-50	1pumps	Constructed	Emission are routed to a control device	98%	Not applicable				None
Champlin 237 A 30D	1pumps	Constructed	Emission are routed to a control device	98%	Not applicable				None
Champlin 237 B 10D	1pumps	Constructed	Emission are routed to a control device	98%	Not applicable				None
Champlin 237 C 100	1pumps	Constructed	Emission are routed to a control device	98%	Not applicable				None
Champlin 261 L 20D	1pumps	Constructed	Emission are routed to a control device	98%	Not applicable				None
Champlin 320 C 1-140h/160h	4pumps	Constructed	Emission are routed to a control device	98%	Not applicable				None
Champlin 345 B 8D	1pumps	Constructed	Emission are routed to a control device	98%	Not applicable				None
Champlin 444 D-10D PAD	1pumps	Constructed	Emission are routed to a control device	98%	Not applicable				None
Champlin 452 K 29-150H	2pumps	Constructed	Emission are routed to a control device	98%	Not applicable				None
Champlin 452 C 70	1pumps	Constructed	Emission are routed to a control device	98%	Not applicable				None
Champlin 452 E 15-20d	1pumps	Constructed	Emission are routed to a control device	98%	Not applicable				None

BP America Production Company
Wamsutter, WY
NSPS Subpart OOOOa Annual Report
Pneumatic Pumps

Well Name	Identification of Each Pump * (§60.5420a(b)(1))	Was the pneumatic pump constructed, modified, or reconstructed during the reporting period? * (§60.5420a(b)(8)(i))	Which condition does the pneumatic pump meet? * (§60.5420a(b)(8)(i))	If your route emissions to a control device and the control device is designed to achieve <95% emissions reduction, specify the percent emissions reduction. * (§60.5420a(b)(8)(i)(C))	Identification of Each Pump * (§60.5420a(b)(8)(ii))	Date Previously Reported* (§60.5420a(b)(8)(ii))	Which condition does the pneumatic pump meet? * (§60.5420a(b)(8)(ii))	If you now route emissions to a control device and the control device is designed to achieve <95% emissions reduction, specify the percent emissions reduction. * (§60.5420a(b)(8)(ii) and §60.5420a(b)(8)(i)(C))	Records of deviations where the pneumatic pump was not operated in compliance with requirements* (§60.5420a(b)(8)(iii) and §60.5420a(c)(16)(ii))
Champlin 452 J 9-20H	1pumps	Constructed	Emission are routed to a control device	98%	Not applicable				None
Champlin 452 L 11-20H	1pumps	Constructed	Emission are routed to a control device	98%	Not applicable				None
Champlin 559 C 10D	1pumps	Constructed	Emission are routed to a control device	98%	Not applicable				None
Coal Bank 11 10d	1pumps	Constructed	Emission are routed to a control device	98%	Not applicable				None
Coal Bank 11-1	2pumps	Constructed	Emission are routed to a control device	98%	Not applicable				None
Delaney Rim 27-20D	1pumps	Constructed	Emission are routed to a control device	98%	Not applicable				None
East Echo Springs 4-35-19-92	1pumps	Constructed	Emission are routed to a control device	98%	Not applicable				None
Fivemile 24-130	2pumps	Constructed	Emission are routed to a control device	98%	Not applicable				None
Fivemile 31-30D	4pumps	Constructed	Emission are routed to a control device	98%	Not applicable				None
Frewen 18-100	1pumps	Constructed	Emission are routed to a control device	98%	Not applicable				None
Frewen 23 70	1pumps	Constructed	Emission are routed to a control device	98%	Not applicable				None
Frewen 24 1	1pumps	Constructed	Emission are routed to a control device	98%	Not applicable				None
Frewen 5 10d	1pumps	Constructed	Emission are routed to a control device	98%	Not applicable				None
Frewen 5-120	1pumps	Constructed	Emission are routed to a control device	98%	Not applicable				None
Frewen 8 Pad	1pumps	Constructed	Emission are routed to a control device	98%	Not applicable				None
Frewen Unit 18-140D	1pumps	Constructed	Emission are routed to a control device	98%	Not applicable				None
Frewen Unit 19-70	1pumps	Constructed	Emission are routed to a control device	98%	Not applicable				None
High Point 13-85D Pad	3pumps	Constructed	Emission are routed to a control device	98%	Not applicable				None
High Point 13-150H Pad	4pumps	Constructed	Emission are routed to a control device	98%	Not applicable				None
High Point 23-80d Pad	2pumps	Constructed	Emission are routed to a control device	98%	Not applicable				None
High Point 27-60D	4pumps	Constructed	Emission are routed to a control device	98%	Not applicable				None
Latham Draw 3-40H	2pumps	Constructed	Emission are routed to a control device	98%	Not applicable				None
Latham Draw 8-140 Pad	4pumps	Constructed	Emission are routed to a control device	98%	Not applicable				None
Latham Draw 17-130D	1pumps	Constructed	Emission are routed to a control device	98%	Not applicable				None

BP America Production Company
Wamsutter, WY
NSPS Subpart OOOOa Annual Report
Pneumatic Pumps

Well Name	Identification of Each Pump * (§60.5420a(b)(1))	Was the pneumatic pump constructed, modified, or reconstructed during the reporting period? * (§60.5420a(b)(8)(i))	Which condition does the pneumatic pump meet? * (§60.5420a(b)(8)(i))	If your route emissions to a control device and the control device is designed to achieve <95% emissions reduction, specify the percent emissions reduction. * (§60.5420a(b)(8)(i)(C))	Identification of Each Pump * (§60.5420a(b)(8)(ii))	Date Previously Reported* (§60.5420a(b)(8)(ii))	Which condition does the pneumatic pump meet? * (§60.5420a(b)(8)(ii))	If you now route emissions to a control device and the control device is designed to achieve <95% emissions reduction, specify the percent emissions reduction. * (§60.5420a(b)(8)(ii) and §60.5420a(b)(8)(i)(C))	Records of deviations where the pneumatic pump was not operated in compliance with requirements* (§60.5420a(b)(8)(iii) and §60.5420a(c)(16)(ii))
ham Draw 19-1/Latham Draw 19	2pumps	Constructed	Emission are routed to a control device	98%	Not applicable				None
Latham Draw 29-100 Pad	4pumps	Constructed	Emission are routed to a control device	98%	Not applicable				None
Lost Creek 29-1	1pumps	Constructed	Emission are routed to a control device	98%	Not applicable				None
Luman 8-90H	2pumps	Constructed	Emission are routed to a control device	98%	Not applicable				None
Luman 10-40H Pad	2pumps	Constructed	Emission are routed to a control device	98%	Not applicable				None
Luman 15-20d	1pumps	Constructed	Emission are routed to a control device	98%	Not applicable				None
Luman 17-80	3pumps	Constructed	Emission are routed to a control device	98%	Not applicable				None
Luman 17-160	3pumps	Constructed	Emission are routed to a control device	98%	Not applicable				None
Luman 9-100D	1pumps	Constructed	Emission are routed to a control device	98%	Not applicable				None
Mexican Flats 19-10	1pumps	Constructed	Emission are routed to a control device	98%	Not applicable				None
Mexican Flats 35-145	1pumps	Constructed	Emission are routed to a control device	98%	Not applicable				None
Monument 9-1	1pumps	Constructed	Emission are routed to a control device	98%	Not applicable				None
Monument 11-1	1pumps	Constructed	Emission are routed to a control device	98%	Not applicable				None
Monument 11-20d/50 Pad	2pumps	Constructed	Emission are routed to a control device	98%	Not applicable				None
Monument Lake 11-160d	2pumps	Constructed	Emission are routed to a control device	98%	Not applicable				None
Monument Lake 9-150d	2pumps	Constructed	Emission are routed to a control device	98%	Not applicable				None
Monument 19 150d	5pumps	Constructed	Emission are routed to a control device	98%	Not applicable				None
Muddy Creek 9-70D	1pumps	Constructed	Emission are routed to a control device	98%	Not applicable				None
Red Desert 5-10D	1pumps	Constructed	Emission are routed to a control device	98%	Not applicable				None
Siberia Ridge 3-20	1pumps	Constructed	Emission are routed to a control device	98%	Not applicable				None
Sourdough 25 70d	1pumps	Constructed	Emission are routed to a control device	98%	Not applicable				None
Three Mile 15-120D	1pumps	Constructed	Emission are routed to a control device	98%	Not applicable				None
Tierney II Unit 5-150H	2pumps	Constructed	Emission are routed to a control device	98%	Not applicable				None
Tierney II Unit 24-70D	1pumps	Constructed	Emission are routed to a control device	98%	Not applicable				None

BP America Production Company
Wamsutter, WY
NSPS Subpart OOOOa Annual Report
Pneumatic Pumps

Well Name	Identification of Each Pump * (§60.5420a(b)(1))	Was the pneumatic pump constructed, modified, or reconstructed during the reporting period? * (§60.5420a(b)(8)(i))	Which condition does the pneumatic pump meet? * (§60.5420a(b)(8)(i))	If your route emissions to a control device and the control device is designed to achieve <95% emissions reduction, specify the percent emissions reduction. * (§60.5420a(b)(8)(i)(C))	Identification of Each Pump * (§60.5420a(b)(8)(ii))	Date Previously Reported* (§60.5420a(b)(8)(ii))	Which condition does the pneumatic pump meet? * (§60.5420a(b)(8)(ii))	If you now route emissions to a control device and the control device is designed to achieve <95% emissions reduction, specify the percent emissions reduction. * (§60.5420a(b)(8)(ii) and §60.5420a(b)(8)(i)(C))	Records of deviations where the pneumatic pump was not operated in compliance with requirements* (§60.5420a(b)(8)(iii) and §60.5420a(c)(16)(ii))
Two Rim 20-110	1pumps	Constructed	Emission are routed to a control device	98%	Not applicable				None
Two Rim 27-30D	1pumps	Constructed	Emission are routed to a control device	98%	Not applicable				None
Two Rim 15-10d Pad	1pumps	Constructed	Emission are routed to a control device	98%	Not applicable				None
Two Rim Unit 15-140	1pumps	Constructed	Emission are routed to a control device	98%	Not applicable				None
Chain Lakes 29-120 (SV)	1Pump	Constructed	No control device or process	Not applicable	Not applicable				None
Champlin 222 E 10	1Pump	Constructed	No control device or process	Not applicable	Not applicable				None
CHAMPLIN 222 E-1	1Pump	Constructed	No control device or process	Not applicable	Not applicable				None
CHAMPLIN 226 B-1	1Pump	Constructed	No control device or process	Not applicable	Not applicable				None
CHAMPLIN 226 B-3	1Pump	Constructed	No control device or process	Not applicable	Not applicable				None
CHAMPLIN 226 D-1	1Pump	Constructed	No control device or process	Not applicable	Not applicable				None
CHAMPLIN 226 D-4	1Pump	Constructed	No control device or process	Not applicable	Not applicable				None
CHAMPLIN 226 D-5	1Pump	Constructed	No control device or process	Not applicable	Not applicable				None
CHAMPLIN 242 A-2	1Pump	Constructed	No control device or process	Not applicable	Not applicable				None
CHAMPLIN 242 A-4	1Pump	Constructed	No control device or process	Not applicable	Not applicable				None
CHAMPLIN 242 A-8	1Pump	Constructed	No control device or process	Not applicable	Not applicable				None
CHAMPLIN 242 C-1	1Pump	Constructed	No control device or process	Not applicable	Not applicable				None
CHAMPLIN 242 C-10	2Pump	Constructed	No control device or process	Not applicable	Not applicable				None
CHAMPLIN 242 C-4	2Pump	Constructed	No control device or process	Not applicable	Not applicable				None
CHAMPLIN 242 C-5	2Pump	Constructed	No control device or process	Not applicable	Not applicable				None
CHAMPLIN 242 E-4	2Pump	Constructed	No control device or process	Not applicable	Not applicable				None
CHAMPLIN 242 F-4	1Pump	Constructed	No control device or process	Not applicable	Not applicable				None
CHAMPLIN 242 H-10	1Pump	Constructed	No control device or process	Not applicable	Not applicable				None
CHAMPLIN 242 J-12	2Pump	Constructed	No control device or process	Not applicable	Not applicable				None
CHAMPLIN 242 J-4	1Pump	Constructed	No control device or process	Not applicable	Not applicable				None

BP America Production Company
Wamsutter, WY
NSPS Subpart OOOOa Annual Report
Pneumatic Pumps

Well Name	Identification of Each Pump * (§60.5420a(b)(1))	Was the pneumatic pump constructed, modified, or reconstructed during the reporting period? * (§60.5420a(b)(8)(i))	Which condition does the pneumatic pump meet? * (§60.5420a(b)(8)(i))	If your route emissions to a control device and the control device is designed to achieve <95% emissions reduction, specify the percent emissions reduction. * (§60.5420a(b)(8)(i)(C))	Identification of Each Pump * (§60.5420a(b)(8)(ii))	Date Previously Reported* (§60.5420a(b)(8)(ii))	Which condition does the pneumatic pump meet? * (§60.5420a(b)(8)(ii))	If you now route emissions to a control device and the control device is designed to achieve <95% emissions reduction, specify the percent emissions reduction. * (§60.5420a(b)(8)(ii) and §60.5420a(b)(8)(i)(C))	Records of deviations where the pneumatic pump was not operated in compliance with requirements* (§60.5420a(b)(8)(iii) and §60.5420a(c)(16)(ii))
CHAMPLIN 261 B-1	1Pump	Constructed	No control device or process	Not applicable	Not applicable				None
CHAMPLIN 261 C-1	1Pump	Constructed	No control device or process	Not applicable	Not applicable				None
CHAMPLIN 261 C-2	1Pump	Constructed	No control device or process	Not applicable	Not applicable				None
CHAMPLIN 261 D-4	1Pump	Constructed	No control device or process	Not applicable	Not applicable				None
CHAMPLIN 261 G-5	1Pump	Constructed	No control device or process	Not applicable	Not applicable				None
CHAMPLIN 261 H-12	1Pump	Constructed	No control device or process	Not applicable	Not applicable				None
CHAMPLIN 261 H-5	2Pump	Constructed	No control device or process	Not applicable	Not applicable				None
CHAMPLIN 261 L-1	1Pump	Constructed	No control device or process	Not applicable	Not applicable				None
CHAMPLIN 261 L-2	1Pump	Constructed	No control device or process	Not applicable	Not applicable				None
CHAMPLIN 278 A-3	1Pump	Constructed	No control device or process	Not applicable	Not applicable				None
CHAMPLIN 278 A-5	1Pump	Constructed	No control device or process	Not applicable	Not applicable				None
CHAMPLIN 336 C-1	2Pump	Constructed	No control device or process	Not applicable	Not applicable				None
CHAMPLIN 336 C-2	2Pump	Constructed	No control device or process	Not applicable	Not applicable				None
CHAMPLIN 336 C-3	2Pump	Constructed	No control device or process	Not applicable	Not applicable				None
CHAMPLIN 337 F-1	1Pump	Constructed	No control device or process	Not applicable	Not applicable				None
Champlin 337 G 7	1Pump	Constructed	No control device or process	Not applicable	Not applicable				None
CHAMPLIN 345 D-1	1Pump	Constructed	No control device or process	Not applicable	Not applicable				None
CHAMPLIN 444 A-1	1Pump	Constructed	No control device or process	Not applicable	Not applicable				None
CHAMPLIN 444 A-3	2Pump	Constructed	No control device or process	Not applicable	Not applicable				None
CHAMPLIN 444 B-1	1Pump	Constructed	No control device or process	Not applicable	Not applicable				None
CHAMPLIN 444 B-2	1Pump	Constructed	No control device or process	Not applicable	Not applicable				None
CHAMPLIN 444 B-3	1Pump	Constructed	No control device or process	Not applicable	Not applicable				None
CHAMPLIN 444 B-6	1Pump	Constructed	No control device or process	Not applicable	Not applicable				None
CHAMPLIN 444 C-1	1Pump	Constructed	No control device or process	Not applicable	Not applicable				None

BP America Production Company
Wamsutter, WY
NSPS Subpart OOOOa Annual Report
Pneumatic Pumps

Well Name	Identification of Each Pump * (§60.5420a(b)(1))	Was the pneumatic pump constructed, modified, or reconstructed during the reporting period? * (§60.5420a(b)(8)(i))	Which condition does the pneumatic pump meet? * (§60.5420a(b)(8)(i))	If your route emissions to a control device and the control device is designed to achieve <95% emissions reduction, specify the percent emissions reduction. * (§60.5420a(b)(8)(i)(C))	Identification of Each Pump * (§60.5420a(b)(8)(ii))	Date Previously Reported* (§60.5420a(b)(8)(ii))	Which condition does the pneumatic pump meet? * (§60.5420a(b)(8)(ii))	If you now route emissions to a control device and the control device is designed to achieve <95% emissions reduction, specify the percent emissions reduction. * (§60.5420a(b)(8)(ii) and §60.5420a(b)(8)(i)(C))	Records of deviations where the pneumatic pump was not operated in compliance with requirements* (§60.5420a(b)(8)(iii) and §60.5420a(c)(16)(ii))
CHAMPLIN 444 D-4	1Pump	Constructed	No control device or process	Not applicable	Not applicable				None
CHAMPLIN 444 F-3	1Pump	Constructed	No control device or process	Not applicable	Not applicable				None
CHAMPLIN 444 I-1	1Pump	Constructed	No control device or process	Not applicable	Not applicable				None
CHAMPLIN 444 I-5	1Pump	Constructed	No control device or process	Not applicable	Not applicable				None
COAL GULCH UNIT C-150	1Pump	Constructed	No control device or process	Not applicable	Not applicable				None
COAL GULCH UNIT C-7	1Pump	Constructed	No control device or process	Not applicable	Not applicable				None
EIGHT MILE 7-150r	1Pump	Constructed	No control device or process	Not applicable	Not applicable				None
EIGHT MILE 7-90	1Pump	Constructed	No control device or process	Not applicable	Not applicable				None
Latham Draw 19-90	1Pump	Constructed	No control device or process	Not applicable	Not applicable				None
Latham Draw 29-130	1Pump	Constructed	No control device or process	Not applicable	Not applicable				None
Laney Wash 15-1	1Pump	Constructed	No control device or process	Not applicable	Not applicable				None
Luman 17-80 (SV)	1Pump	Constructed	No control device or process	Not applicable	Not applicable				None
Luman 17-160 (SV)	1Pump	Constructed	No control device or process	Not applicable	Not applicable				None
Monument 19-160 (SV)	1Pump	Constructed	No control device or process	Not applicable	Not applicable				None
Monument 29-50 (SV)	1Pump	Constructed	No control device or process	Not applicable	Not applicable				None
RED DESERT 7-8	1Pump	Constructed	No control device or process	Not applicable	Not applicable				None
RED WASH 3-1	1Pump	Constructed	No control device or process	Not applicable	Not applicable				None
USA V	1Pump	Constructed	No control device or process	Not applicable	Not applicable				None

BP America Production Company
Wamsutter, WY
NSPS Subpart OOOOa Annual Report
Storage Vessels

Well Name	Storage Vessel ID * (§60.5420a(b)(1)(ii) and §60.5420a(b)(6)(i))	Was the storage vessel constructed, modified or reconstructed during the reporting period? * (§60.5420a(b)(6)(i))	Latitude of Storage Vessel (Decimal Degrees to 5 Decimals Using the North American Datum of 1983) * (§60.5420a(b)(6)(i))	Longitude of Storage Vessel (Decimal Degrees to 5 Decimals Using the North American Datum of 1983) * (§60.5420a(b)(6)(i))	If new affected facility or if returned to service during the reporting period, provide documentation of the VOC emission rate determination according to §60.5365a(e).* (§60.5420a(b)(6)(ii))	Records of deviations where the storage vessel was not operated in compliance with requirements * (§60.5420a(b)(6)(iii) and §60.5420a(c)(5)(iii))	Have you met the requirements specified in §60.5410a(h)(2) and (3)?* (§60.5420a(b)(6)(iv))	Removed from service during the reporting period? * (§60.5420a(b)(6)(v))	If removed from service, the date removed from service. * (§60.5420a(b)(6)(v))	Returned to service during the reporting period? * (§60.5420a(b)(6)(vi))
Chain Lakes 29-50d Pad	4 Condensate Tanks	Constructed	41.93248	-107.94253	See attachment	None	Yes	No	Not applicable	No
Monument Lake 11-50 Pad	6 Condensate Tanks	Constructed	41.89411	-107.88851	See attachment	None	Yes	No	Not applicable	No

Well Name	Storage Vessels Constructed, Modified, Reconstructed or Returned to Service During Reporting Period that Comply with §60.5395a(a)(2) with a Control Device Tested Under § 60.5413a(d)									
	Make of Purchased Device * (§60.5420a(b)(6)(vii) and §60.5420a(c)(5)(vi)(A))	Model of Purchased Device * (§60.5420a(b)(6)(vii) and §60.5420a(c)(5)(vi)(A))	Serial Number of Purchased Device * (§60.5420a(b)(6)(vii) and §60.5420a(c)(5)(vi)(A))	Date of Purchase * (§60.5420a(b)(6)(vii) and §60.5420a(c)(5)(vi)(B))	Copy of Purchase Order * (§60.5420a(b)(6)(vii) and §60.5420a(c)(5)(vi)(C))	Latitude of Control Device (Decimal Degrees to 5 Decimals Using the North American Datum of 1983) * (§60.5420a(b)(6)(vii) and §60.5420a(c)(5)(vi)(D))	Longitude of Control Device (Decimal Degrees to 5 Decimals Using the North American Datum of 1983) * (§60.5420a(b)(6)(vii) and §60.5420a(c)(5)(vi)(D))	Inlet Gas Flow Rate * (§60.5420a(b)(6)(vii) and §60.5420a(c)(5)(vi)(E))	Please provide the file name that contains the Records of Pilot Flame Present at All Times of Operation * (§60.5420a(b)(6)(vii) and §60.5420a(c)(5)(vi)(F)(1)) Please provide only one file per record.	Please provide the file name that contains the Records of No Visible Emissions Periods Greater Than 1 Minute During Any 15-Minute Period * (§60.5420a(b)(6)(vii) and §60.5420a(c)(5)(vi)(F)(2)) Please provide only one file per record.
	e.g.: Incinerator Guy	e.g.: 400 Combustor	e.g.: 123B3D392	e.g.: 12/10/16	e.g.: purchase_order.pdf or XYZCompressorStation.pdf	e.g.: 34.12340	e.g.: -101.12340	e.g.: 3000 scfh	e.g.: pilotflame.pdf or XYZCompressorStation.pdf	e.g.: noemissions.pdf or XYZCompressorStation.pdf
Chain Lakes 29-50d Pad	Not Applicable									
Monument Lake 11-50 Pad	Not Applicable									

Well Name	Storage Vessel ID * (§60.5420a(b)(1)(ii) and §60.5420a(b)(6)(i))	If returned to service, the date returned to service. * (§60.5420a(b)(6)(vi))
Chain Lakes 29-50d Pad	4 Condensate Tanks	Not applicable
Monument Lake 11-50 Pad	6 Condensate Tanks	Not applicable

Well Name	Storage Vessels Construc			
	Make of Purchased Device * (§60.5420a(b)(6)(vii) and §60.5420a(c)(5)(vi)(A))	Please provide the file name that contains the Records of Maintenance and Repair Log * (§60.5420a(b)(6)(vii) and §60.5420a(c)(5)(vi)(F)(3)) Please provide only one file per record.	Please provide the file name that contains the Records of Visible Emissions Test Following Return to Operation From Maintenance/Repair Activity * (§60.5420a(b)(6)(vii) and §60.5420a(c)(5)(vi)(F)(4)) Please provide only one file per record.	Please provide the file name that contains the Records of Manufacturer's Written Operating Instructions, Procedures and Maintenance Schedule * (§60.5420a(b)(6)(vii) and §60.5420a(c)(5)(vi)(F)(5)) Please provide only one file per record.
	e.g.: Incinerator Guy	e.g.: maintainlog.pdf **or** XYZCompressorStation.pdf	e.g.: emistest.pdf **or** XYZCompressorStation.pdf	e.g.: manufinsruct.pdf **or** XYZCompressorStation.pdf
Chain Lakes 29-50d Pad				
Monument Lake 11-50 Pad				

October, 2017

BP America Production Company

Chain Lakes 29-50d & Monument 11-50 Pad Sites
Sweetwater County, WY

NSPS OOOOa - Closed Vent System:

Engineering Review
& Certification

Prepared By:
ENERCON SERVICES, INC.
15770 NORTH DALLAS PARKWAY,
SUITE 400,
DALLAS, TX 75248

ENERCON

ENGINEERING CERTIFICATION

Originator: Dr. Suresh Iyer (b) (6) [redacted] 10/20/2017
Signature Date

By means of this Professional Engineer Certification, I hereby attest to the following:

- I am familiar with the requirements of **NSPS OOOOa** and have verified that this **Engineering Assessment** has been prepared in accordance with the requirements of this regulation;
- I or my agent have visited and examined the facility;
- Site visit records validate engineering data provided by BP
- I have verified that this **Engineering Assessment** has been prepared in accordance with good engineering practice, including consideration of applicable industry standards;
- I have verified that the **Engineering Assessment** is adequate for the facility.

Professional Engineer (General) PATRICK TERRENCE BRUNETTE 11358 WYOMING
Date 10-25-2017

Pat Brunette, PE
Wyoming PE Registration #PE11358
Wyoming Certificate of Authorization for Enercon Services, Inc. #E0943

Contents

1 INTRODUCTION 1-1
1.1 Introduction 1-1

2 EXPERIMENTAL METHODOLOGY 2-1
2.1 Methods and Results 2-1
2.1.1 Calculation of Heat Duty Requirements 2-1
2.1.2 Site Visit Observations 2-2
2.1.2.1 Chain Lakes 29-50d Pad 2-2
2.1.2.2 Monument 11-50 Pad 2-2
2.1.3 Tank Back Pressure Calculations 2-6

3 CONCLUSIONS 3-1

A APPENDIX - Site Location Map A-0

B APPENDIX - Abutec Combustor B-0

C APPENDIX - HYSYS Output C-0

D APPENDIX - Tank Calculations in Air Permits D-0

E APPENDIX - Backpressure Calculations E-0
Chain Lakes Site E-1
Closed Vent System Assessment E-2
Tank Calculations E-4
Vent Header System Drawings E-5
Monument Site E-10
Closed Vent System Assessment E-11
Tank Calculations E-13
Vent Header System Drawings E-14
Glossary of Terms E-19

List of Tables

2.1 Equipment with Air Emissions at the Chain Lakes and Monument Sites 2-3

List of Figures

2.1 HYSYS simulation results provided by BP. 2-1
2.2 Abutec 100 Combustors at the Monument site. 2-4
2.3 Tanks at the Chain Lakes site. 2-5

1 INTRODUCTION

1 INTRODUCTION

1.1 Introduction

BP America Production Company (BP) operates two (2) sites, Monument 11-50 Pad and Chain Lakes 29-50d Pad, in the state of Wyoming that are subject to the New Source Performance Standards (NSPS) OOOOa. This regulation targets chemical storage vessels at Oil & Gas (O&G) facilities that have the potential to emit Volatile Organic Compounds (VOC) emissions equal to or greater than 6 tons per year (tpy). If the storage tank emissions are subject to NSPS OOOOa, then the emissions from the storage tank should be reduced by 95% using a closed vent system.

The purpose of this Engineering Assessment Report is to analyze the VOC emissions of the closed vent systems on both Pad sites. This Engineering Assessment reviewed the design data to estimate the capacity of the control system, in this case the Abutec 100 Combustor System. In addition to this, the engineering review included a field visit to inspect the closed vent system and validate the design data provided with the actual field conditions. The engineering analysis of the control device was to ensure that all emissions from the storage vessels are routed to the control device and that the control device is of sufficient design and capacity to accommodate all emissions from each O&G Pad site.

The Engineering Assessment Report is outlined to provide an overview of the assessment methodology and then discusses the results and conclusions. Enercon Services, Inc. (ENERCON) conducted site visits on September 11, 2017 and collected data from the two O&G production well sites; Monument 11-50 Pad and Chain Lakes 29-50d Pad. Appendix A provides the locations of the two sites.

2 METHODS AND RESULTS

2 EXPERIMENTAL METHODOLOGY

2.1 Methods and Results

2.1.1 Calculation of Heat Duty Requirements

Each of these two sites (Chain Lakes and Monument) operates four (4) Abutec 100 combustor. Each of these combustors can handle a maximum inlet flow rate of 275 Million Standard Cubic Feet per Day (MSCFD) and the rated heat capacity of a Dual AB-100 system is 18.4 Million British Thermal Unit per hour (MMBTU/hr). The Abutec 100 combustor provides 98% destruction rate efficiency (DRE). Relevant data used in this engineering review regarding the Abutec 100 system are included in Appendix B.

A site visit was conducted to assess the closed vent system (including the tanks and the control device). Details of the field inspections are provided in the Section 2.1.2. Engineering data was collected during the course of this engineering review and used further during the analysis to ensure the adequacy of the system such that they comply with the regulatory requirements of §60.5411a.

Based on O&G speciation data (in Appendix C) and the gas-to-oil ratio in the HYSYS output shown in Figure 2.1 was estimated to be 168 standard cubic foot (scf)/stock tank barrel (stb) at 55 pounds per square inch gauge (psig) and 75° F heater treater operation and the lower heating value (LHV) of the gas at the sites are 2,496 BTU/scf. Use of LHV ensures that a lower, conservative, oil throughput to the tank is estimated to ensure the adequacy of the control system.

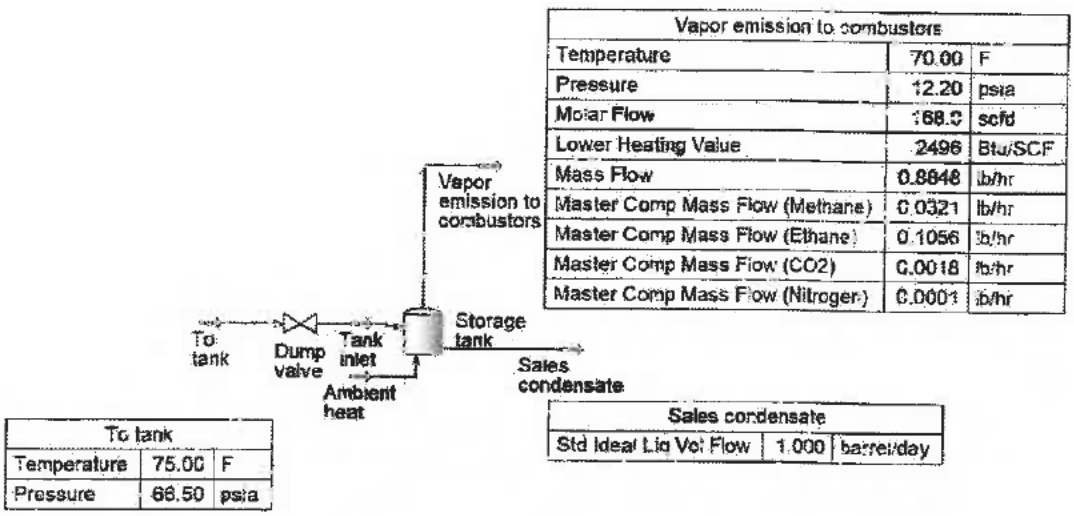

Figure 2.1: HYSYS simulation results provided by BP.

Using the O&G data and the Abutec 100 design data, a design capacity in units of stb/day of oil that can be handled by the Abutec 100 system can be calculated. This design data can then be compared against actual production data to set the threshold for actual throughput of oil to the affected storage tanks.

$$2,496\left(\frac{BTU}{scf}\right)\cdot 168\left(\frac{scf}{stb}\right)\cdot x\left(\frac{stb}{day}\right)\cdot\frac{1}{24}\left(\frac{day}{hour}\right)=9.2\times 10^{6}\left(\frac{BTU}{hr}\right) \quad (1)$$

$$x\left(\frac{stb}{day}\right)=\frac{9.2\times 10^{6}\left(\frac{BTU}{hr}\right)}{17,472\left(\frac{BTU-day}{stb-hr}\right)} \quad (2)$$

$$x\left(\frac{stb}{day}\right)=527\left(\frac{stb}{day}\right) \quad (3)$$

Equation (3) provides the maximum amount of oil (with the specifications: LHV of 2,496 BTU/scf and 168 scf/stb) that can be handled by one Abutec 100 Combustor with a rating of 9.2 MMBTU/hour.

Given that there are four Abutec 100's at each of the two O&G well sites, the maximum amount of oil throughput that can be handled at each site is estimated to be 2,108 stb/day. This assumes that there are two Dual AB-100 combustors with a total rating of 36.8 MMBTU/hr.

At surface conditions, the design capacity of 2,180 bbl/day is a lot higher than the estimated average condensate production rate of 351 bbl/day at Monument Lake 11-50 Pad and 262 bbl/day at the Chain Lakes 29-50d Pad (see attached documentation/calculations provided in the Air Permit Application for the two sites in Appendix D).

2.1.2 Site Visit Observations

The locations of the two O&G well sites are provided in Appendix A.

2.1.2.1 Chain Lakes 29-50d Pad Chain Lakes 29-50d pad has eight 400-barrel tanks. These tanks include 4 condensate tanks, 3 produced water tanks and one blow-down tank to receive initial flow during completion. Other equipment at this location includes three production units, three line heaters, one glycol dehydrator unit, one horizontal 6 x 20 heater treater and one compressor.

2.1.2.2 Monument 11-50 Pad Monument Lake 11-50 pad has seven 400-barrel tanks. These tanks include 5 condensate tanks, 1 produced water tanks and one blow-down tank. Other equipment at this location includes two production units, two line heaters and one horizontal 3-phase separator.

Inspections to confirm the operation of a closed vent system at these two sites included documentation of olfactory observations and visual observations. It is also noted that BP currently performs monthly infrared camera imaging using FLIR cameras. Details on the equipment present at the two sites are provided in Table 2.1

BP has a voluntary Operations Maintenance & Inspection (OM&I) plan with the state of Wyoming Department of Environmental Quality. This plan requires BP to conduct more frequent FLIR inspections and shorter response times to reported leaks. BP has an active Leak Detection and Repair (LDAR) program in place at both O&G well sites. FLIR inspections are conducted monthly until the calculated uncontrolled emissions fall below 100 tons then they perform quarterly FLIR inspections per the OM&I plan. Currently the State requires quarterly inspection, however, only one of these inspection is required to be performed with optical gas imaging. BP conducts three types of inspections:

- Initial /Annual Method 21 using an OVM (organic vapor meter)
- Initial/Semi-annual FLIR to address Federal LDAR
- Monthly initial for Wyoming FLIR while calculated emissions are above 100 tons then quarterly with the FLIR.

In addition to this, the design data provided by BP was corroborated by the inspection of equipment present at these two sites during the field inspections. Figures 2.2 and 2.3 on the following page provide some of the nameplates and the equipment present at the site.

Equipment Type	Equipment Count Chain Lakes	Equipment Count Monument
Condensate Tanks	4	5
Produced Water Tanks	3	1
Blow-down Tanks	1	1
Glycol Units	1	-
Line Heaters	3	2
Horizontal Heater Treaters	1	-
Compressors	1	-
Abutec 100 Combustors	4	4

Table 2.1: Equipment with Air Emissions at the Chain Lakes and Monument Sites

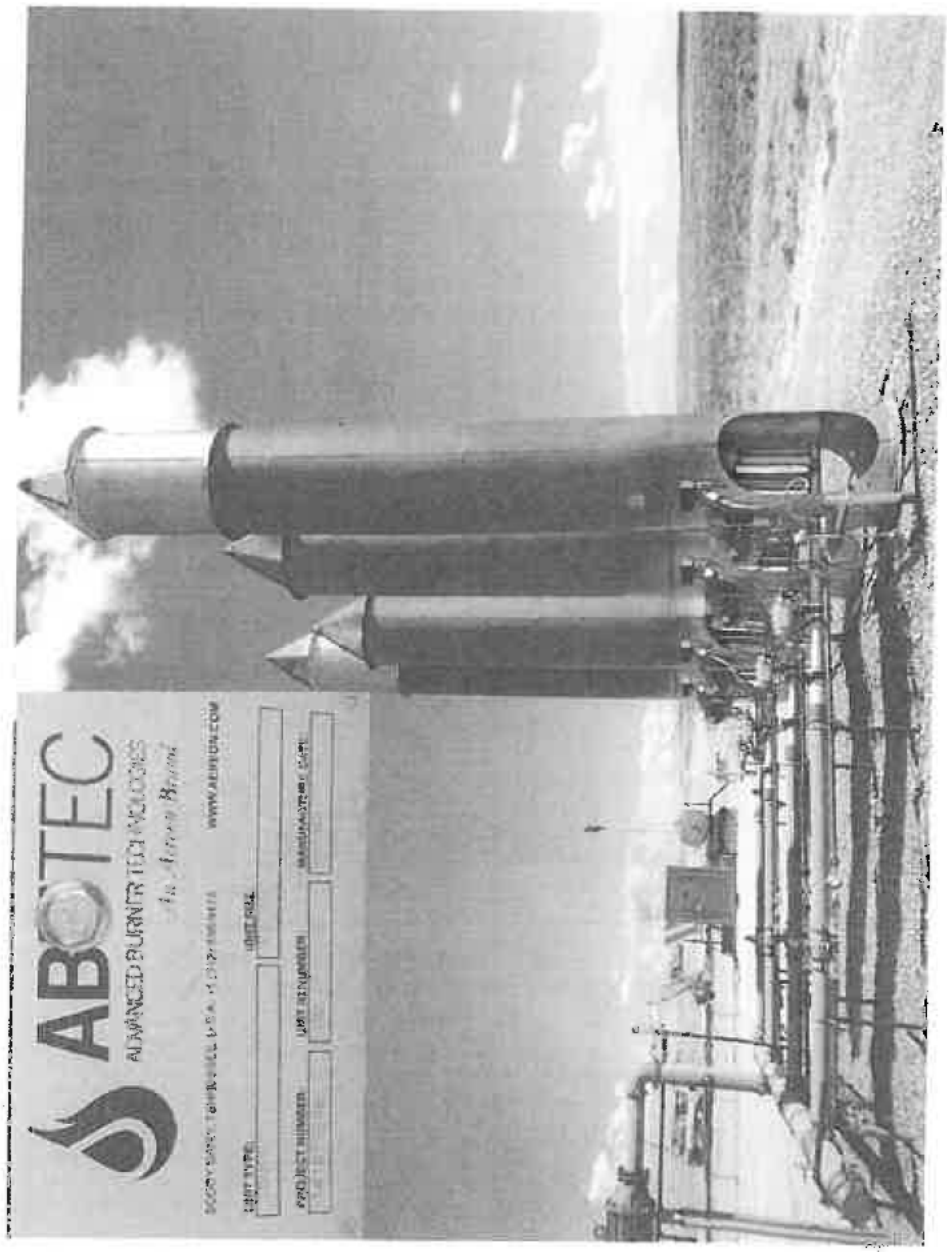

Figure 2.2: Abutec 100 Combustors at the Monument site.

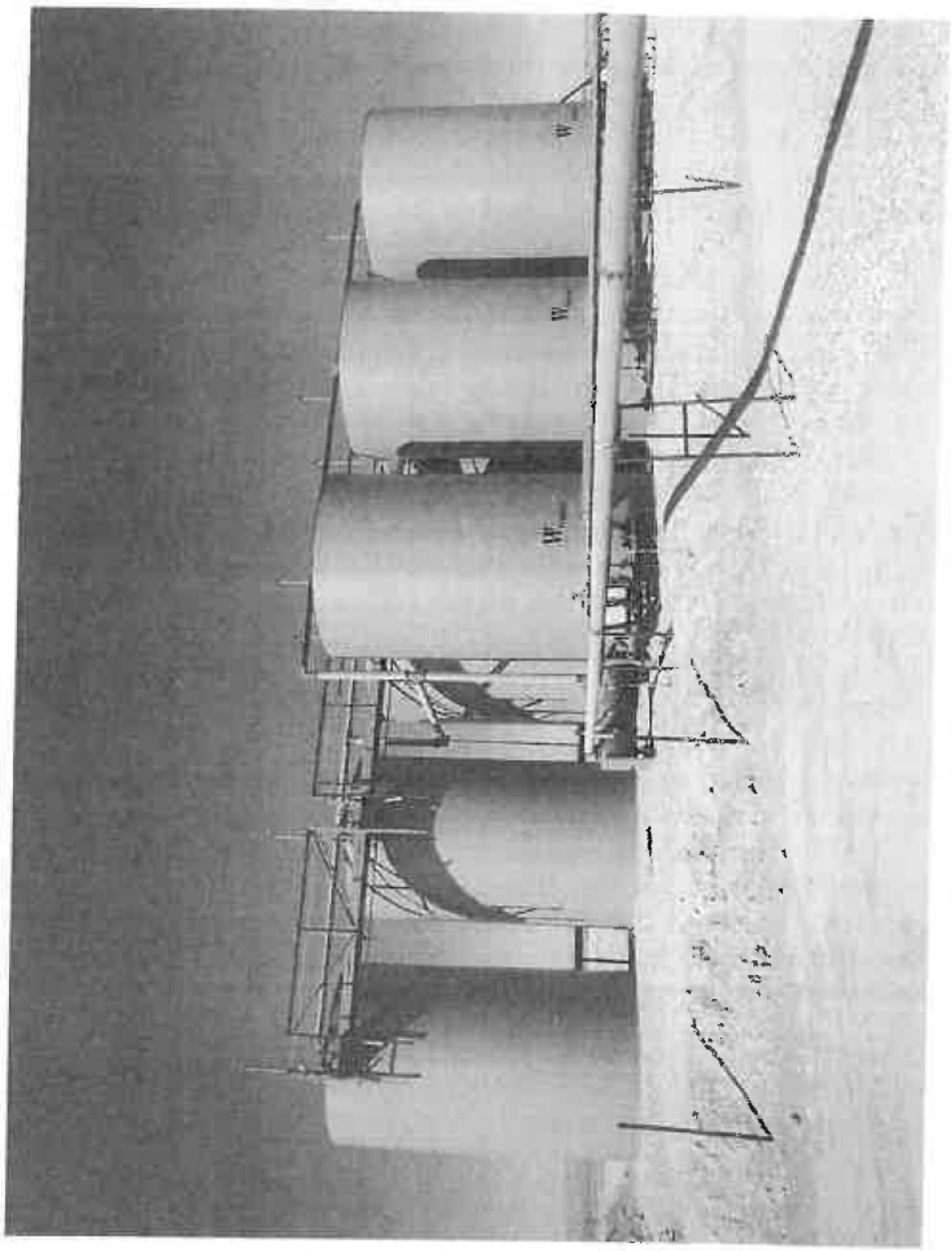

Figure 2.3: Tanks at the Chain Lakes site.

2.1.3 Tank Back Pressure Calculations

Tank backpressure calculations (in ounces per square inch - oz/in^2) were conducted by first estimating the flash gas flow rates in ProMax using the O&G composition data in Appendix C and the design throughput data provided in Appendix D. The calculated backpressure was compared with the relief pressure set points on the tanks of 12 oz/in^2 (data provided by BP). To be conservative a flow multiplier of 1.5 was used in the backpressure calculations. Additionally, elevation change (difference in elevation between the top of the tank and the inlet of the control device) was set at 20 feet and 0.1 inches of static liquid in low spots of the closed vent system to provide a conservative estimate of the backpressure in the tanks. The control device backpressure of 4 oz/in^2 was used, based on design capacity data provided by BP.

The ProMax Vent Calculator tool (see report in Appendix E) cannot handle backpressure computations from the oil and produced water tanks at the same time. Therefore, all the three produced water tanks at the Chain Lakes site were modeled as condensate tanks. Monument site operates one produced water tank and was excluded from the flow calculations. This is because, to provide conservative estimate of gas flow throughput, in the vent header system, a flow multiplier of 2.79 was used in the calculated gas flow rate of 60 MSCFD in both Chain Lakes and Monument sites. Therefore, this additional flow is expected to sufficiently accommodate for the gas due to produced water flashing at the Monument site. As a result, this provided the maximum heat duty load in the four Abutec 100 combustors (36.8 MMBTU/hr - 9.2 MMBTU/hr from each combustor).

Vent header drawings was provided for Chain Lakes and Monument sites and was used to calculate the pipe lengths and estimate the number fittings in each segment. Pipe internal diameters was used a provided in this drawing and was used as such. Appendix E provides the backpressure calculations results. ProMax process flow sketch (used for flash gas flow calculations), vent header drawings (from BP) for Chain Lakes and the Monument sites. Based on the above inputs and assumptions, the backpressure calculations at both Chain Lakes and Monument sites were sufficiently lower than 12 oz/in^2 (including a control device ΔP of 4 oz/in^2) suggesting that the closed vent system was adequately designed.

4 CONCLUSIONS

3 CONCLUSIONS

This Engineering Assessment Report was conducted to evaluate the adequacy of the control system to effectively reduce the VOC emissions by 95 percent by weight or greater from the affected tanks in the two sites, (1) Monument Lake 11-50 Pad, and (2) Chain Lakes 29-50d Pad . This assessment was conducted to fulfill the requirements in regulation §60.5411a where the engineering review is certified by a qualified professional engineer.

The design conditions suggest that the Abutec 100 Combustor can handle more than 6 times the permitted capacity at the Monument Lake 11-50 Pad and the Chain Lakes 29-50d Pad can handle more than 8 times the permitted capacity. Additionally, backpressure from the tanks and its calculated capacities were sufficiently lower to provide a closed vent system.

Site visit inspections suggest that the closed vent system has been constructed adequately according to the design specifications.

A APPENDIX - Site Location Map

0.05
0.1 Miles
ENERCON
bing
Monument Lake 11-50 Pad Site
BP America Production Company
Monument Lake:
(b) (9)
[redacted]

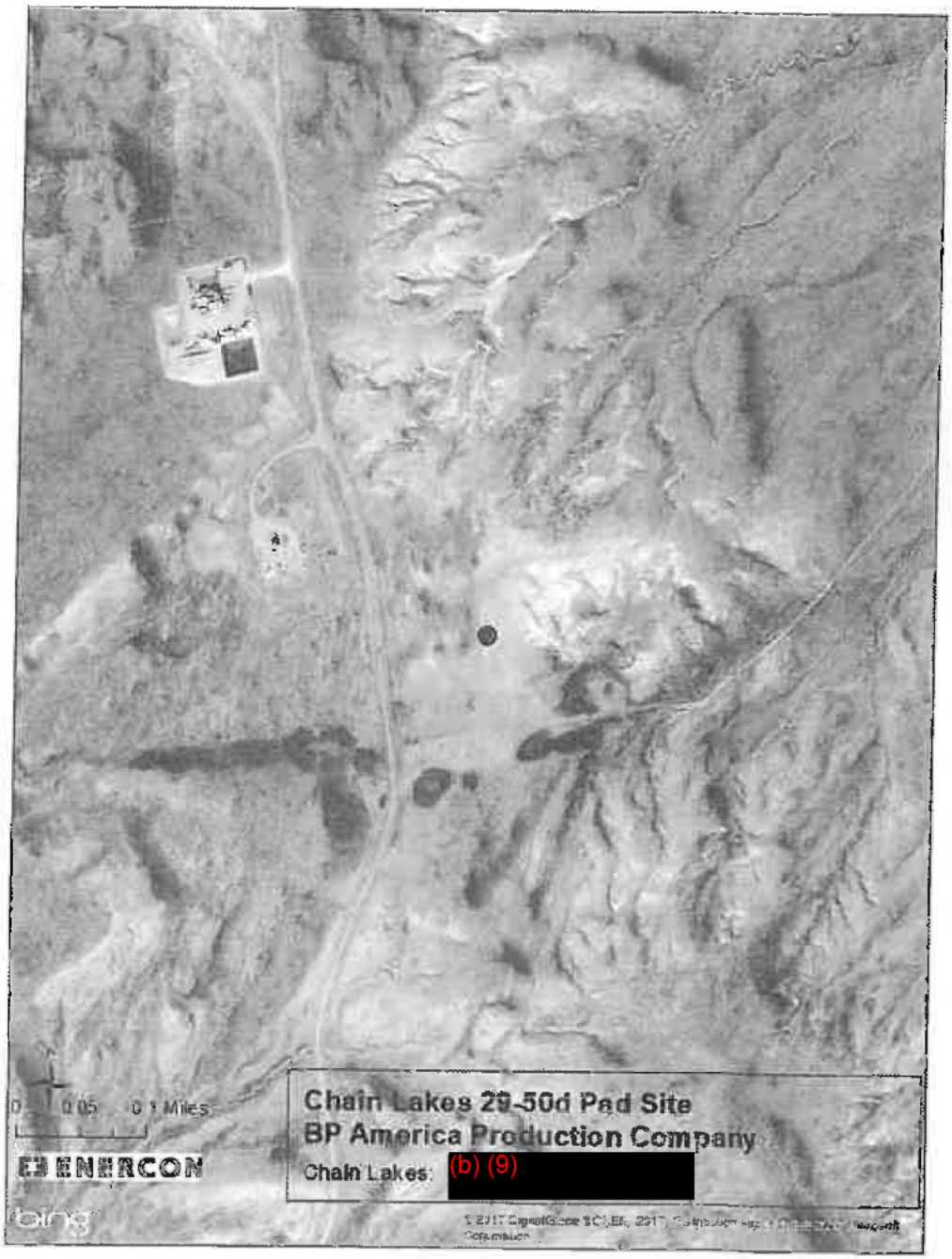
0 0.05 0.1 Miles
ENERCON
bing
Chain Lakes 29-50d Pad Site
BP America Production Company
Chain Lakes: (b) (9) [redacted]

B APPENDIX - Abutec Combustor

ABUTEC

16310 BRATTON LANE | BUILDING 3 #350 | AUSTIN, TX 78728

ENGINEERING PROPOSAL

DUAL AB-100 QUAD-O ENCLOSED COMBUSTOR
WITH
MULTI-NOZZLE BURNER ASSEMBLY

PROJECT NAME	**DUAL AB-100 ENCLOSED COMBUSTORS FOR BP, WYOMING**
PROJECT LOCATION	WYOMING, USA
PREPARED FOR	YEVGENIY KONDRATENKO, PHD, PE, FACILITIES ENGINEER BRITISH PETROLEUM MOBILE: +1 281 832 3255 LYNC: +1 832 619 5309 YEVGENIY.KONDRATENKO@BP.COM
SALES CONTACT	**BEAU HIGGINBOTHAM, REGIONAL SALES MANAGER - GULF COAST** **T -1 (713) 828-4241** **BHIGGINBOTHAM@AEREON.COM**
TECHNICAL CONTACT	ALFONSO MORENO, APPLICATIONS ENGINEER T +1 (512) 836-9473 x 124 AMORENO@AEREON.COM
QUOTE NUMBER	16-10727 **REV 4**
DATE:	**November 1, 2016**

AEREON.COM

Customer Proposal 16-10727

1.0 INTRODUCTION

Flare Industries is pleased to offer the Dual AB-100 Quad-O Certified Combustors to meet the specified needs of your application. The AB-100 Quad-O Combustors is a non-temperature controlled enclosed flare that offers high destruction efficiency and low emissions. The AB-100 Combustors has proven successful in the North American Oil & Gas market.

ADVANTAGES OF USING ABUTEC's UNIQUE FLARING TECHNOLOGY:

- Low Emission Technology (High Destruction Efficiency and Low NOx and CO)
- Compact & Easy to Install Design

1.1 COMMERCIAL SUMMARY

1.2 STATEMENT OF WORK

ITEM	QTY	DESCRIPTION	PRICE

Dual AB-100 Combustor Package

1 2 **Combustion Chambers**
- **Rated Heat Capacity 18.4 MMBtu/hr**
- **33" Diameter enclosed combustion chambers, 16 ft overall height**
- **Single piece design for ease of transportation and installation**
- **(1) Type K Thermocouple for Temperature Indication**
- **37" Diameter Baseplate Assembly**
- **Includes (1) 5' x 10' Mounting Skid for both Combustion Chambers**
- **Material of Construction**
  - **Flare Stack Enclosure: 304 SS**

2 2 **Internal Multi-Nozzle Burner Assembly**
- **Proprietary Design Promotes Air Induction & Complete Combustion**
- **5:1 Smokeless Turndown of Proposed Waste Gas**
- **Requires No Assist Gas, No Steam, No Premixing, and No Blowers**
- **3" x 150# RFSO Stainless Steel Inlet Nozzle For Waste Gas**
- **304 Stainless Steel Piping**
- **Gas Fittings in Accordance with NFPA, UL, and/or CSA**
- **Flare Inlet Line Consisting of:**
  - **Pneumatic Transmitter**
  - **Pneumatic Valve**

3 2 **Profire Pilot Assemby:**
- **Primary Ignition system**
- **High-energy, spark-type pilot**
- **¼-inch FNPT pilot gas piping connection at grade**
- **Pilot Gas Valve Train consisting of:**
  - **Isolation Ball Valve**
  - **Solenoid Valve**

Customer Proposal 16-10727

4	2	**Profire 2100 Ignition System** • **Fully Integrated Control Panel/ Cabinet** • **NEMA 4 controls enclosure** • **Ignition Transformer and includes all required accessories**

5	1	**Documentation Package**
		• **Additional Operating and Maintenance Manuals**
		• **Drawing Package:**
		  • **Piping & Instrumentation Drawing**
		  • **General Arrangement Drawing**
		  • **Profire Manual**
		  • **Spare Part List**

6	1	**Integrated System Skid** • **Skid Dimensions 5 ft. x 10 ft.**

Total for Dual AB-100 Combustor System (Items 1 – 6)	**$ 31,560.00**
Note: 10 % Discount will Apply with Qty (5) Unit Purchase **Price per Unit with 10% Discount**	**$28,404.00**

OPTIONS

7	1	Solar Package 24 VDC • **Includes Solar Panel and Battery**	$1,575.00
8	1	**ABUTEC 100 Stack Extension to a Total of 20 feet**	**$ 1,470.00**
9	1	**ABUTEC 100 Knockout Pot**	**$ 1,249.50**
10	1	**ABUTEC 100 Bird Protection Screen**	**$ 758.63**
11	1	**ABUTEC 100 Air Intake Wind Guards**	**$ 381.94**
12	1	**ABUTEC 100 Air Intake Flame Arrestor**	**$ 3,659.15**
13	1	Data Logging (Includes Modbus)	$ 515.30
14	1	Lot of ABUTEC Recommended Spare Parts for Start up	$ 572.00

1.3 VALIDITY

The prices in this quotation are valid for 30 days.

3 | Page

AEMECOM.COM

Customer Proposal 16-10727

1.4 DELIVERY

Estimated Delivery Time: 3 - 5 Weeks ARO (Client Approval Waived)

* The quoted delivery is based upon our current production schedule / shop load. An updated delivery schedule will be available at time of order.

1.5 SHIPPING TERMS

- ☐ Ex-works: Austin, TX
- ☒ Ex-works: Point of Manufacture
- ☐ FCA: Houston, TX

1.6 PACKING AND SHIPPING PREPARATION

Export packing and crating when quoted as an option only includes technology items and does not include stacks, vessels, skids, ladders and platforms, or utility piping.

- ☒ Inland freight packing
- ☐ Export packing
- ☐ Storage and preservation crating - 90 days maximum storage

1.7 TERMS OF PAYMENT

Progress payments as per the following*:

100% Upon notification of readiness for shipment, net 30

*Payment terms are only valid as long as client is approved for credit by FII's financial institution. Three credit references and financial statements may be requested for this purpose.

1.8 INSTALLATION - COMMISSIONING

	Domestic **
Daily Labor Rate	$1,400.00
Travel Rate	$1,400.00
Overtime Rate	$200.00/Hour
Travel Expenses	Cost + 20%
Standard Work Day	8-Hour Day

**Daily Rate includes Accommodations, General Expenses, Subsistence, Tolls, & Local Transportation

4 | Page

ENERCON.COM

Customer Proposal 16-10727

1.9 SPARE PARTS LIST

Control System		
Part	Quantity	Unit Cost
Stack Thermocouple	1	$122.50
Stack Thermocouple Thermowell	1	$60.58
Ignition Transformer	1	$388.00
	Total:	$571.08

2.0 TECHNICAL SUMMARY

2.1 DESIGN CONDITIONS

Max inlet flow rate (at 1,600 Btu/ft3):	**Dual AB-100: 275.0 MSCFD**
Rated heat capacity (Dual AB-100)	**18.4 MMBtu/hr**
Inlet Temperature:	< 130 deg F
Minimum Pressure required for operation:	**4 oz/in²**
Smokeless flow rate:	0 - 100% of Max Flow, Meets Ringelmann 1
Destruction Rate Efficiency	98% DRE

2.2 SITE CONDITIONS

Ambient Temperature:	-20 to 90 Deg F
Wind speed for radiation calculations:	20 mph
Wind speed for structural calculations:	120 mph
Seismic classification:	*(to be advised by client)*
Elevation (above mean sea level):	*(to be advised by client)*
Humidity for radiation calculations:	*(to be advised by client)*
Solar radiation:	300 Btu/ft²-hr

2.3 UTILITIES

Pilot gas:	58,500 BTU/Hr required per pilot
(Optional)	If Natural Gas is used: 65 SCFH @ 8 - 10 psig (per ignitor)
Purge gas[4]:	7.4 SCFH (3" Burner)
Electrical:	24 VDC (controls)
Instrument Air:	20 psig Minimum

Customer Proposal 16-10727

2.4 DESIGN CLARIFICATIONS

- Gas composition has not been provided. Combustors have been sized based on an LHV of 1,600 Btu/ft3

2.5 DOCUMENTATION

Flare Industries will provide the following documentation along with the equipment on this project:

- ☒ Piping and instrumentation diagram (P&ID)
- ☒ Mechanical general arrangement
- ☐ Ladder Logic Diagrams
- ☐ Control Enclosures Drawings
- ☒ Operating & maintenance manuals (upon shipment)
- ☐ Manufacturing Record Books (MRB)

2.6 QUALITY / NON-DESTRUCTIVE TESTING

- ☒ Visual inspection
- ☒ Dimensional check
- ☒ Factory acceptance test: *Ignition system only*
- ☒ Dry film thickness: *painted carbon steel components only*
- ☐ Radiography extent:
- ☐ Dye penetrant examination extent:
- ☐ Ultrasonic testing extent:
- ☐ Magnetic particle examination extent:
- ☐ Hydro-testing extent:
- ☐ Pneumatic testing extent
- ☐ Hardness/Impact Testing
- ☐ PMI

2.7 EXCLUSION LIST

This Proposal is offered in accordance with the below Technical Exclusions. These items can be included in our scope of work upon client request, subject to price and delivery impact.

TECHNICAL EXCLUSIONS

1. Civil and foundation design for any equipment including dead men, anchor bolts or nuts, design of anchor bolt length or projection as this is part of civil engineering foundation design.
2. This design is exclusive of all external loadings due to upstream piping. Wind, seismic and temperature loadings have been considered. Allowable nozzle loads other than those published by API-537 are not considered.
3. Bolt Kits at battery limit flanged connections.
4. Supply to Customer of shop details, fabrication drawings or proprietary calculations
5. Installation of equipment including supply of cranes and/or personnel. General installation instructions and assembly drawings will be provided, however, detailed erection instructions and drawings are excluded. These

instructions are meant to provide guidance and general steps to complete the installation. These procedures are not intended to be a substitute for experienced installation personnel. Field assembly and erection of the flare is outside the scope of work to be provided by Flare Industries and is the sole responsibility of others. It is understood that the field contractor retained for this purpose is familiar with the assembly and erection of tall towers.

6. No interconnecting piping, wire, or conduit is included between proposed equipment, unless otherwise indicated in the scope of work section of proposal.
7. The ignition system / control panel / pilots and related valve trains are a Flare Industries' standard package. As such, they are designed and/or manufactured according to our standards and procedures, using our standard components. All valve train components have the following characteristics: ½ to ¾ inch diameter, threaded fittings, carbon steel construction. No other materials, diameters, flange ratings, piping specifications, or additional materials or instrumentation are included, nor do any client supplied specifications apply, unless specifically agreed to in writing by Flare Industries.
8. Dispersion calculations, nozzle load calculations, finite element analysis or other stress analysis, apart from structural calculations of the stack.
9. NACE compliant carbon steel is not included, unless specifically mentioned under the scope of work section of the proposal.
10. If NACE compliant carbon steel is proposed, materials which exceed the requirements of NACE MR-01-75 are not considered.
11. Passivation or pickling of stainless steel materials or procedure, post weld heat treatment, procedures, or associated charts.
12. Any testing or procedures not marked as included in the quality / testing section of proposal.
13. Aereon or Abutec standard weld procedures apply to our equipment, unless otherwise stated in our proposal. Any request to alter or modify our current weld procedures based upon clients' internal specifications is currently excluded from our scope of supply. If new procedures are requested by the client, price and delivery impact will apply.
14. Hydro-testing or procedures of any piece of equipment other than stamped ASME pressure vessels, unless specifically indicated in the proposal.
15. Painting or coating for stainless steel, internal surfaces of equipment or galvanized equipment.
16. External insulation, insulation clips or heat tracing of any kind. Refractory or insulation is included for enclosed combustion devices.
17. Armored cable or cable tray of any kind. We are supplying our standard wire and conduit within our battery limits.
18. Material certification as per BSEN 10204, 3.2 (formerly 3.1A and 3.1c).

COMMERCIAL EXCLUSIONS

1. Whereas regards statements in client specifications or purchase orders concerning specification order of precedence, please be advised that Flare Industries' proposal, including its integral exclusion list, precedes and precludes all other documents or agreements whether written or verbal.
2. Freight costs and logistics will be offered to our clients as an optional price or as part of the base price, but not at cost as the phrase "prepay and add" is sometimes interpreted.
3. Flare Industries strictly prohibits the use or sale of our equipment in countries sanctioned by the United States Government such as: Iran, Syria, Sudan, North Korea, and Cuba.
4. Third Party Inspection
5. All documentation will be supplied in Acrobat pdf format, not Word, Excel, Autocad, or any other format.
6. Please note that documentation and drawing delivery dates are as stated in our proposal, however, if a VDS applies to the project, all delivery dates must be agreed to in writing on a document by document basis.
7. Documentation Legalization Costs.

Customer Proposal 16-10727

8. Our operating and maintenance manuals and quality dossiers will be provided in the English language. Translation of the O&M manuals is available at an additional cost, however, only text generated by FII will be translated. Drawings, cut sheets, data sheets and/or standard documents will be provided in English.
9. No FII presence at meetings (including, but not limited to, kick-off meetings, HAZOP meetings, drawing review and inspection / certification meetings) is included, unless explicitly mentioned in section 1.3.
10. Spare parts when quoted do not include cross sectional drawings, export packing or freight.
11. There are no bank guarantees, performance bonds, or warranty bonds included in our scope of supply or price. Cost for these requirements will be added on to our base price quoted as options. All bond and/or bank guarantee formats, if applicable, must be agreed to in writing by Flare Industries.
12. Storage of equipment after notification of readiness for shipment.

3.0 TERMS AND CONDITIONS

Our proposal is based upon Flare Industries' "Standard Terms and Conditions of Sale." We have attached a copy for your reference.

ABUTEC
ADVANCED BURNER TECHNOLOGIES
An Aereon Company

"THE FOCUS OF OUR TEAM IS TO PROVIDE CUTTING EDGE COMBUSTION AND ENVIRONMENTAL TECHNOLOGY, EXPERIENCE, INNOVATION, AND SUPERIOR SERVICE; ALL OF WHICH GIVE OUR GROWING CLIENT BASE SUCCESSFUL SOLUTIONS AND THE HIGHEST LEVEL OF QUALITY AND SATISFACTION."

C APPENDIX - HYSYS Output

Flash Emissions Determination
Wamsutter Field 2005 (Combined Field)
(2008 Submission)
Procedure

Pressurized samples of both wet gas downstream of the production unit and condensate downstream of the production unit were obtained from four different wells and analyzed by Questar based in Rock Springs, Wyoming in June, 2005. Details of the sampling and analytical protocols can be obtained from the Questar lab in Rock Springs.

These compositions were averaged based on flowrate for each compound shown to arrive at a weighted average composition for both the wet gas and the condensate at pressurized conditions.

Using gas and condensate production data for the specific wells sampled, an average "well stream" composition was constructed for input into the HySys process simulation system. A process system representing the well site equipment and flows was constructed within HySys.

Simulation runs were made at separator discharge pressures of 300 psi, 400 psi, 500 psi, 600 psi, and 700 psi to determine flash emissions in units of pounds per "Stock Tank Barrel" (STB) (Barrels which remain in the tank as liquids for future sales) for methane, ethane, VOC's (hydrocarbons C3 and heavier), and Hazardous Air Pollutants (HAP's) (n-hexane, benzene, ethyl-benzene, xylenes, toluene). Separator outlet temperatures were held at constant 75 degrees F for the simulation runs.

For each of the target compounds/families, the simulation run data was used to construct regression equations which yield flash tank emissions in terms of lbs of the target per STB as a function of the separator discharge pressure.

These calculations are submitted as representation of the Wamsutter Field.

Pressure: 300 psi
Based on 0.43 MMscfd Gas and 6.27 bpd Condensate

Name	Gas	Condensate	To_Sep	To-Sep1
Vapour Fraction	1	0	0.986012707	0.986012707
Temperature [F]	75	75	74.03535562	74.03535562
Pressure [psig]	285.3	285.3	285.3	285.3
Molar Flow [MMSCFD]	0.43	6.51E-03	0.436506596	0.436506596
Mass Flow [lb/hr]	932.3878634	61.97689085	994.3647543	994.3647543
Specific Gravity	<empty>	0.684172151	<empty>	<empty>
Liquid Volume Flow [barrel/day]	187.1672065	6.27	193.4372065	193.4372065
Heat Flow [Btu/hr]	-1765299.12	-53336.57282	-1818635.693	-1818635.693
Mass Density [lb/ft3]	1.103851852	42.71030312	1.177336234	1.177336234
Comp Mole Frac (CO2)	2.73E-02	5.90E-03	2.70E-02	2.70E-02
Comp Mole Frac (Nitrogen)	1.71E-03	1.50E-05	1.69E-03	1.69E-03
Comp Mole Frac (Methane)	0.849819659	6.36E-02	0.838100917	0.838100917
Comp Mole Frac (Ethane)	6.81E-02	4.23E-02	6.77E-02	6.77E-02
Comp Mole Frac (Propane)	3.17E-02	6.46E-02	3.22E-02	3.22E-02
Comp Mole Frac (i-Butane)	6.36E-03	3.34E-02	6.76E-03	6.76E-03
Comp Mole Frac (n-Butane)	7.11E-03	5.57E-02	7.83E-03	7.83E-03
Comp Mole Frac (i-Pentane)	2.42E-03	4.70E-02	3.08E-03	3.08E-03
Comp Mole Frac (n-Pentane)	1.99E-03	4.82E-02	2.68E-03	2.68E-03
Comp Mole Frac (Cyclopentane)	0	0	0	0
Comp Mole Frac (n-Hexane)	6.48E-04	4.31E-02	1.28E-03	1.28E-03
Comp Mole Frac (Cyclohexane)	3.18E-04	0	3.13E-04	3.13E-04
Comp Mole Frac (22-Mbutane)	4.30E-05	1.56E-03	6.56E-05	6.56E-05
Comp Mole Frac (23-Mbutane)	1.64E-04	7.55E-03	2.74E-04	2.74E-04
Comp Mole Frac (2-Mpentane)	4.88E-04	2.53E-02	8.57E-04	8.57E-04
Comp Mole Frac (3-Mpentane)	2.51E-04	1.39E-02	4.54E-04	4.54E-04
Comp Mole Frac (n-Heptane)	5.87E-04	0.197522	3.52E-03	3.52E-03
Comp Mole Frac (Mcyclohexane)	3.22E-04	0	3.17E-04	3.17E-04
Comp Mole Frac (224-Mpentane)	3.80E-05	6.09E-03	1.28E-04	1.28E-04
Comp Mole Frac (Benzene)	1.49E-04	1.05E-02	3.03E-04	3.03E-04
Comp Mole Frac (Toluene)	1.74E-04	4.23E-02	8.02E-04	8.02E-04
Comp Mole Frac (E-Benzene)	5.00E-06	1.36E-03	2.52E-05	2.52E-05
Comp Mole Frac (m-Xylene)	4.10E-05	7.09E-02	1.10E-03	1.10E-03
Comp Mole Frac (o-Xylene)	6.00E-06	7.07E-03	1.11E-04	1.11E-04
Comp Mole Frac (n-Octane)	1.37E-04	6.38E-02	1.09E-03	1.09E-03
Comp Mole Frac (n-Nonane)	5.90E-05	4.30E-02	6.99E-04	6.99E-04
Comp Mole Frac (n-Decane)	0.00E+00	0.105364	1.57E-03	1.57E-03
Molecular Weight	19.74727855	86.74710943	20.7459825	20.7459825
Comp Mass Frac (CO2)	6.09E-02	2.99E-03	5.73E-02	5.73E-02
Comp Mass Frac (Nitrogen)	2.43E-03	4.84E-06	2.28E-03	2.28E-03
Comp Mass Frac (Methane)	0.690402571	1.18E-02	0.648104725	0.648104725
Comp Mass Frac (Ethane)	1.04E-01	1.47E-02	9.82E-02	9.82E-02
Comp Mass Frac (Propane)	7.08E-02	3.28E-02	6.84E-02	6.84E-02
Comp Mass Frac (i-Butane)	1.87E-02	2.23E-02	1.89E-02	1.89E-02
Comp Mass Frac (n-Butane)	2.09E-02	3.73E-02	2.19E-02	2.19E-02
Comp Mass Frac (i-Pentane)	8.85E-03	3.91E-02	1.07E-02	1.07E-02
Comp Mass Frac (n-Pentane)	7.28E-03	4.01E-02	9.33E-03	9.33E-03
Comp Mass Frac (Cyclopentane)	0	0	0	0
Comp Mass Frac (n-Hexane)	2.83E-03	4.29E-02	5.32E-03	5.32E-03

Comp Mass Frac (Cyclohexane)	1.36E-03	0	1.27E-03	1.27E-03
Comp Mass Frac (22-Mbutane)	1.88E-04	1.55E-03	2.72E-04	2.72E-04
Comp Mass Frac (23-Mbutane)	7.16E-04	7.60E-03	1.14E-03	1.14E-03
Comp Mass Frac (2-Mpentane)	2.13E-03	2.51E-02	3.56E-03	3.56E-03
Comp Mass Frac (3-Mpentane)	1.10E-03	1.38E-02	1.89E-03	1.89E-03
Comp Mass Frac (n-Heptane)	2.98E-03	0.22816544	1.70E-02	1.70E-02
Comp Mass Frac (Mcyclohexane)	1.60E-03	0	1.50E-03	1.50E-03
Comp Mass Frac (224-Mpentane)	2.20E-04	8.02E-03	7.06E-04	7.06E-04
Comp Mass Frac (Benzene)	5.89E-04	9.44E-03	1.14E-03	1.14E-03
Comp Mass Frac (Toluene)	8.12E-04	4.49E-02	3.56E-03	3.56E-03
Comp Mass Frac (E-Benzene)	2.69E-05	1.66E-03	1.29E-04	1.29E-04
Comp Mass Frac (m-Xylene)	2.20E-04	8.68E-02	5.62E-03	5.62E-03
Comp Mass Frac (o-Xylene)	3.23E-05	8.65E-03	5.69E-04	5.69E-04
Comp Mass Frac (n-Octane)	7.92E-04	8.40E-02	5.98E-03	5.98E-03
Comp Mass Frac (n-Nonane)	3.83E-04	6.36E-02	4.32E-03	4.32E-03
Comp Mass Frac (n-Decane)	0	0.172820942	1.08E-02	1.08E-02

Total Mass Fractions	1.00E+00	1.00E+00	1.00E+00	1.00E+00
Total VOC Mass Fractions	1.43E-01	9.71E-01	1.94E-01	1.94E-01
Total HAP Mass Fractions	4.51E-03	1.94E-01	1.63E-02	1.63E-02

TPY VOC
TPY VOC/STB

Lbs C1/STB
Lbs C2/STB
Lbs C3+/STB
Lbs HAPs/STB

lbs n-Hexane / STB
lbs Benzene / STB
lbs Toluene / STB
lbs E-Benzene / STB
lbs Xylene / STB

Molar Flow (MMSCF / STB)

To-sepl2	To-sales	To-tank	To-tankl	To-tankl2	Flash-Vap	Stab-cond
0.986189998	1	0	0.203797439	0.239625435	1	0
75	75	75	51.07778882	75	74.72681484	74.72681484
285.3	285.3	285.3	-3.196	-3.296	-3.496	-3.496
0.436506596	4.30E-01	6.03E-03	6.03E-03	6.03E-03	1.45E-03	4.58E-03
994.3647543	936.5191148	57.84563948	57.84563948	57.84563948	6.4200421	51.42559738
<empty>	<empty>	0.688901793	<empty>	<empty>	<empty>	0.715612269
193.4372065	187.631408	5.805798433	5.805798433	5.805798433	0.892522551	4.913275882
-1818060.232	-1768682.66	-49377.57216	-49377.57216	-48482.69597	-7572.914125	-40909.78184
1.174605329	1.108035011	43.00655696	0.891547856	0.721462141	7.95E-02	44.67299183
2.70E-02	2.73E-02	7.12E-03	7.12E-03	7.12E-03	2.86E-02	3.09E-04
1.69E-03	1.71E-03	5.16E-05	5.16E-05	5.16E-05	2.13E-04	2.27E-07
0.838100917	0.848663603	8.38E-02	8.38E-02	8.38E-02	0.343997529	1.30E-03
6.77E-02	6.82E-02	3.54E-02	3.54E-02	3.54E-02	0.13737984	3.11E-03
3.22E-02	3.19E-02	5.57E-02	5.57E-02	5.57E-02	1.83E-01	1.54E-02
6.76E-03	6.46E-03	2.81E-02	2.81E-02	2.81E-02	6.79E-02	1.55E-02
7.83E-03	7.31E-03	4.47E-02	4.47E-02	4.47E-02	9.12E-02	3.00E-02
3.08E-03	2.60E-03	3.79E-02	3.79E-02	3.79E-02	4.27E-02	3.64E-02
2.68E-03	2.14E-03	4.15E-02	4.15E-02	4.15E-02	3.71E-02	4.29E-02
0	0	0	0	0	0	0
1.28E-03	7.10E-04	4.21E-02	4.21E-02	4.21E-02	1.31E-02	5.12E-02
3.13E-04	1.51E-04	1.19E-02	1.19E-02	1.19E-02	2.87E-03	1.48E-02
6.56E-05	4.52E-05	1.52E-03	1.52E-03	1.52E-03	8.41E-04	1.74E-03
2.74E-04	1.79E-04	7.03E-03	7.03E-03	7.03E-03	3.30E-03	8.21E-03
8.57E-04	5.43E-04	2.33E-02	2.33E-02	2.33E-02	9.97E-03	2.75E-02
4.54E-04	2.75E-04	1.33E-02	1.33E-02	1.33E-02	5.08E-03	1.59E-02
3.52E-03	1.05E-03	0.180292995	0.180292995	0.180292995	1.85E-02	0.231601701
3.17E-04	9.88E-05	1.59E-02	1.59E-02	1.59E-02	1.79E-03	2.04E-02
1.28E-04	4.02E-05	6.41E-03	6.41E-03	6.41E-03	7.02E-04	8.22E-03
3.03E-04	1.57E-04	1.07E-02	1.07E-02	1.07E-02	3.04E-03	1.32E-02
8.02E-04	2.07E-04	4.33E-02	4.33E-02	4.33E-02	3.80E-03	5.59E-02
2.52E-05	2.65E-06	1.63E-03	1.63E-03	1.63E-03	4.50E-05	2.13E-03
1.10E-03	9.98E-05	7.23E-02	7.23E-02	7.23E-02	1.66E-03	9.48E-02
1.11E-04	9.47E-06	7.38E-03	7.38E-03	7.38E-03	1.58E-04	9.67E-03
1.09E-03	1.39E-04	6.87E-02	6.87E-02	6.87E-02	2.25E-03	8.98E-02
6.99E-04	3.51E-05	4.81E-02	4.81E-02	4.81E-02	5.20E-04	6.32E-02
1.57E-03	3.08E-05	0.111527601	0.111527601	0.111527601	4.14E-04	0.146760792
20.7459825	19.81273074	87.39068854	87.39068854	87.39068854	40.28676049	102.3270076
5.73E-02	6.06E-02	3.59E-03	3.59E-03	3.59E-03	3.12E-02	1.33E-04
2.28E-03	2.42E-03	1.65E-05	1.65E-05	1.65E-05	1.48E-04	6.20E-08
0.648104725	0.687185707	1.54E-02	1.54E-02	1.54E-02	0.136985896	2.04E-04
9.82E-02	1.03E-01	1.22E-02	1.22E-02	1.22E-02	1.03E-01	9.14E-04
6.84E-02	7.09E-02	2.81E-02	2.81E-02	2.81E-02	0.200135792	6.64E-03
1.89E-02	1.90E-02	1.87E-02	1.87E-02	1.87E-02	9.79E-02	8.81E-03
2.19E-02	2.15E-02	2.98E-02	2.98E-02	2.98E-02	0.131618892	1.70E-02
1.07E-02	9.46E-03	3.13E-02	3.13E-02	3.13E-02	7.65E-02	2.57E-02
9.33E-03	7.79E-03	3.43E-02	3.43E-02	3.43E-02	6.65E-02	3.02E-02
0	0	0	0	0	0	0
5.32E-03	3.09E-03	4.15E-02	4.15E-02	4.15E-02	2.81E-02	4.31E-02

1.27E-03	6.41E-04	1.15E-02	1.15E-02	1.15E-02	6.00E-03	1.21E-02
2.72E-04	1.96E-04	1.50E-03	1.50E-03	1.50E-03	1.80E-03	1.46E-03
1.14E-03	7.81E-04	6.93E-03	6.93E-03	6.93E-03	7.05E-03	6.92E-03
3.56E-03	2.36E-03	2.30E-02	2.30E-02	2.30E-02	2.13E-02	2.32E-02
1.89E-03	1.19E-03	1.31E-02	1.31E-02	1.31E-02	1.09E-02	1.34E-02
1.70E-02	5.30E-03	0.206729804	0.206729804	0.206729804	4.60E-02	0.226798862
1.50E-03	4.89E-04	1.79E-02	1.79E-02	1.79E-02	4.36E-03	1.96E-02
7.06E-04	2.32E-04	8.38E-03	8.38E-03	8.38E-03	1.99E-03	9.18E-03
1.14E-03	6.18E-04	9.60E-03	9.60E-03	9.60E-03	5.89E-03	1.01E-02
3.56E-03	9.60E-04	4.57E-02	4.57E-02	4.57E-02	8.70E-03	5.03E-02
1.29E-04	1.42E-05	1.98E-03	1.98E-03	1.98E-03	1.19E-04	2.22E-03
5.62E-03	5.35E-04	8.79E-02	8.79E-02	8.79E-02	4.38E-03	9.83E-02
5.69E-04	5.08E-05	8.96E-03	8.96E-03	8.96E-03	4.16E-04	1.00E-02
5.98E-03	7.99E-04	8.98E-02	8.98E-02	8.98E-02	6.39E-03	1.00E-01
4.32E-03	2.27E-04	7.07E-02	7.07E-02	7.07E-02	1.65E-03	7.93E-02
1.08E-02	2.21E-04	0.181583477	0.181583477	0.181583477	1.46E-03	0.204069876

1.00E+00	1.00E+00	1.00E+00	1.00E+00	1.00E+00	1.00E+00	1.00E+00
1.94E-01	1.46E-01	9.69E-01	9.69E-01	9.69E-01	7.29E-01	9.99E-01
1.63E-02	5.27E-03	1.96E-01	1.96E-01	1.96E-01	4.76E-02	2.14E-01

2.05E+01
4.17E+00
4.295896625
3.22E+00
2.29E+01
1.49E+00
8.81E-01
1.85E-01
2.73E-01
3.72E-03
1.50E-01
2.95E-04

Pressure 100 psi
Based on 0.43 MMscfd Gas and 6.27 bpd Condensate

Name	Gas	Condensate	To_Sap	To-Sepl	To-sep2
Vapour Fraction	1	0	0.785325788	0.983025788	0.98287327
Temperature [F]	75	75	75.2651388	75.2683981	76
Pressure [psig]	385.3	385.3	385.3	385.2	385.3
Molar Flow [MMSCFD]	0.43	6.61E-03	0.436606598	0.426596836	0.426506596
Mass Flow [lb/hr]	902.3672634	61.5706066	964.3047543	964.3047543	964.3047543
Specific Gravity	<empty>	0.685344128	<empty>	<empty>	<empty>
Liquid Volume Flow [barrel/day]	187.1672066	6.27	193.4372065	193.4372065	193.4372065
Heat Flow [Btu/hr]	-1768912741	-53390.77421	-1822220.556	-1822220.556	-1822220.58
Mass Density [lb/ft3]	1.507556049	42.78159623	1.692760310	1.802560902	1.803661144
Comp Mole Frac (CO2)	2.72E-02	5.90E-03	2.70E-02	2.70E-02	2.70E-02
Comp Mole Frac (Nitrogen)	1.71E-03	1.60E-06	1.69E-03	1.70E-03	1.69E-03
Comp Mole Frac (Methane)	0.848610955	6.36E-02	0.838100017	0.838100017	0.936100917
Comp Mole Frac (Ethane)	6.81E-02	4.23E-02	6.77E-02	6.77E-02	6.77E-02
Comp Mole Frac (Propane)	3.17E-02	6.46E-02	3.22E-02	3.22E-02	3.22E-02
Comp Mole Frac (i-Butane)	6.66E-03	3.34E-02	6.76E-03	6.76E-03	6.76E-03
Comp Mole Frac (n-Butane)	7.11E-03	6.57E-02	7.57E-03	7.84E-03	7.53E-03
Comp Mole Frac (i-Pentane)	2.42E-03	4.70E-02	3.09E-03	3.08E-03	3.08E-03
Comp Mole Frac (n-Pentane)	1.59E-03	4.62E-02	2.06E-03	2.06E-03	2.06E-03
Comp Mole Frac (Cyclopentane)	0	0	0	0	0
Comp Mole Frac (n-Hexane)	6.48E-04	4.31E-02	1.28E-03	1.28E-03	1.28E-03
Comp Mole Frac (Cyclohexane)	3.18E-04	0	3.17E-04	3.18E-04	1.18E-04
Comp Mole Frac (22-Mbutane)	4.30E-05	1.58E-03	6.58E-05	6.56E-05	6.58E-05
Comp Mole Frac (23-Mbutane)	1.04E-04	7.86E-03	2.74E-04	2.74E-04	2.74E-04
Comp Mole Frac (2-Mpentane)	4.38E-04	2.53E-02	8.57E-04	8.57E-04	8.57E-04
Comp Mole Frac (3-Mpentane)	2.51E-04	1.30E-02	4.54E-04	4.54E-04	4.54E-04
Comp Mole Frac (n-Heptane)	5.27E-04	0.117622	3.55E-03	3.42E-03	3.69E-03
Comp Mole Frac (Mcyclohexane)	3.32E-04	0.00E+00	3.17E-04	3.17E-04	3.17E-04
Comp Mole Frac (224-Mpentane)	3.60E-06	5.00E-03	1.28E-04	1.20E-04	1.28E-04
Comp Mole Frac (Benzene)	1.40E-04	1.01E-02	3.03E-04	3.03E-04	3.03E-04
Comp Mole Frac (Toluene)	1.74E-04	4.73E-02	8.02E-04	8.02E-04	8.02E-04
Comp Mole Frac (E-Benzene)	5.90E-06	1.38E-03	2.52E-05	2.52E-05	2.52E-05
Comp Mole Frac (m-Xylene)	4.10E-05	7.09E-03	1.10E-03	1.10E-03	1.10E-03
Comp Mole Frac (o-Xylene)	8.00E-06	7.07E-03	1.11E-04	1.11E-04	1.11E-04
Comp Mole Frac (n-Octane)	1.37E-04	6.38E-02	1.09E-03	1.09E-03	1.09E-03
Comp Mole Frac (n-Nonane)	6.00E-05	4.90E-02	6.96E-04	6.97E-04	6.29E-04
Comp Mole Frac (n-Decane)	0.00E+00	0.105384	1.57E-03	1.57E-03	1.57E-03
Molecular Weight	1.97E+01	8.87E+01	2.07E+01	2.07E+01	2.07E+01
Comp Mass Frac (CO2)	6.09E-02	2.99E-03	5.73E-02	5.73E-02	5.73E-02
Comp Mass Frac (Nitrogen)	2.43E-03	4.84E-06	2.28E-03	2.28E-03	2.28E-03
Comp Mass Frac (Methane)	6.90E-01	1.16E-02	6.48E-01	6.48E-01	6.48E-01
Comp Mass Frac (Ethane)	1.04E-01	1.47E-02	9.86E-02	9.32E-02	9.69E-02
Comp Mass Frac (Propane)	7.08E-02	3.20E-02	6.84E-02	6.84E-02	6.84E-02
Comp Mass Frac (i-Butane)	1.87E-02	2.28E-02	1.89E-02	1.89E-02	1.89E-02
Comp Mass Frac (n-Butane)	2.09E-02	5.72E-02	2.19E-02	2.19E-02	2.19E-02
Comp Mass Frac (i-Pentane)	8.85E-03	3.91E-02	1.07E-02	1.07E-02	1.07E-02
Comp Mass Frac (n-Pentane)	7.29E-03	4.01E-02	9.30E-03	9.33E-03	9.33E-03
Comp Mass Frac (Cyclopentane)	0.00E+00	0.00E+00	0.00E+00	0.00E+00	0.00E+00
Comp Mass Frac (n-Hexane)	2.83E-03	4.20E-02	5.32E-03	5.32E-03	5.32E-03
Comp Mass Frac (Cyclohexane)	1.36E-03	0.00E+00	1.27E-03	1.27E-03	1.27E-03
Comp Mass Frac (22-Mbutane)	1.80E-04	1.55E-03	2.72E-04	2.72E-04	2.72E-04
Comp Mass Frac (23-Mbutane)	7.10E-04	7.50E-03	1.14E-03	1.14E-03	1.14E-03
Comp Mass Frac (2-Mpentane)	2.10E-03	2.51E-02	3.56E-03	3.56E-03	3.56E-03
Comp Mass Frac (3-Mpentane)	1.10E-03	1.29E-02	1.89E-03	1.89E-03	1.89E-03
Comp Mass Frac (n-Heptane)	2.98E-03	2.28E-01	1.70E-02	1.70E-02	1.70E-02
Comp Mass Frac (Mcyclohexane)	1.60E-03	0.00E+00	1.50E-03	1.50E-03	1.50E-03
Comp Mass Frac (224-Mpentane)	2.50E-04	6.02E-02	7.06E-04	7.06E-04	7.06E-04
Comp Mass Frac (Benzene)	5.56E-04	3.44E-03	1.14E-03	1.14E-03	1.14E-03
Comp Mass Frac (Toluene)	8.12E-04	4.49E-02	3.56E-03	3.56E-03	3.56E-03
Comp Mass Frac (E-Benzene)	2.61E-05	1.66E-03	1.20E-04	1.29E-04	1.26E-04
Comp Mass Frac (m-Xylene)	2.20E-04	6.88E-02	6.62E-03	6.62E-03	6.62E-03
Comp Mass Frac (o-Xylene)	3.28E-05	8.85E-03	5.69E-04	5.69E-04	5.69E-04
Comp Mass Frac (n-Octane)	7.87E-04	8.40E-02	5.92E-03	5.98E-03	6.06E-03
Comp Mass Frac (n-Nonane)	5.53E-04	6.98E-02	4.32E-03	4.32E-03	4.92E-03
Comp Mass Frac (n-Decane)	0	0.1173820942	1.05E-02	1.06E-02	1.08E-02
Total Mass Fractions	1.00E+00	1.00E+00	1.00E+00	1.00E+00	1.00E+00
Total VOC Mass Fractions	1.43E-01	9.71E-01	1.94E-01	1.94E-01	1.94E-01
Total HAP Mass Fractions	4.51E-03	1.94E-01	1.63E-02	1.69E-02	1.66E-02

Name	To-sales	To-tank	To-tank1	To-tank2	Flash-Vap	Stab-cond
Vapour Fraction	1	0	0.284482454	0.321047806	1	0
Temperature [F]	76	75	45.5431919	75	74.8821034	74.8821034
Pressure [psig]	385.3	385.3	-3.140	-3.296	-3.496	-3.496
Molar Flow [MMSCFD]	4.20E-01	7.04E-03	7.04E-03	7.04E-03	2.27E-03	4.77E-03
Mass Flow [lb/hr]	890.0572062	63.40764813	63.40764813	63.40764813	10.11943209	53.2881161
Specific Gravity	<empty>	0.675071157	<empty>	<empty>	<empty>	0.714419267
Liquid Volume Flow [barrel/day]	180.9370077	6.49989872	6.49989872	6.49989872	1.400114806	5.099483914
Heat Flow [Btu/hr]	-1709631.06	-67009.48596	-65803.46358	-65439.00794	-11070.36775	-42521.64369
Mass Density [lb/ft3]	1.575048211	42.10450696	0.059131069	0.507926818	6.07E-02	41.69081179
Comp Mole Frac (CO2)	2.78E-02	9.18E-03	7.18E-03	8.18E-03	2.71E-02	3.01E-04
Comp Mole Frac (Nitrogen)	1.21E-03	7.09E-05	7.09E-06	7.09E-06	2.10E-03	2.24E-07
Comp Mole Frac (Methane)	0.950010649	0.111639425	0.111639425	0.111639425	0.343726298	1.30E-03
Comp Mole Frac (Ethane)	6.84E-02	4.40E-02	4.40E-02	4.40E-02	1.34E-01	3.91E-03
Comp Mole Frac (Propane)	2.16E-02	6.76E-02	6.76E-02	6.76E-02	1.78E-01	1.50E-02
Comp Mole Frac (i-Butane)	3.54E-03	3.26E-02	3.26E-02	3.20E-02	6.84E-02	1.57E-02
Comp Mole Frac (n-Butane)	7.12E-03	6.11E-02	6.11E-02	6.11E-02	9.37E-02	3.99E-02
Comp Mole Frac (i-Pentane)	2.46E-03	4.10E-02	4.10E-02	4.10E-02	4.86E-02	3.89E-02
Comp Mole Frac (n-Pentane)	2.00E-03	4.40E-02	4.40E-02	4.40E-02	6.97E-02	4.60E-02
Comp Mole Frac (Cyclopentane)	0	0	0	0	0	0
Comp Mole Frac (n-Hexane)	6.35E-04	4.08E-02	4.08E-02	4.08E-02	1.37E-02	5.39E-02
Comp Mole Frac (Cyclohexane)	1.32E-04	1.14E-02	1.14E-02	1.14E-02	2.98E-03	1.33E-02
Comp Mole Frac (22-Mbutane)	4.12E-05	1.56E-03	1.56E-03	1.55E-03	8.99E-04	1.89E-03
Comp Mole Frac (23-Mbutane)	1.63E-04	7.05E-03	7.05E-03	7.05E-03	5.50E-03	8.75E-03
Comp Mole Frac (2-Mpentane)	4.91E-04	2.32E-02	2.32E-02	2.32E-02	1.09E-02	2.92E-02
Comp Mole Frac (3-Mpentane)	2.47E-04	1.31E-02	1.31E-02	1.31E-02	5.09E-03	1.66E-02
Comp Mole Frac (n-Heptane)	9.09E-04	0.103298763	0.103298763	0.103298763	1.59E-02	0.132134097
Comp Mole Frac (Mcyclohexane)	8.13E-05	1.45E-02	1.45E-02	1.45E-02	1.70E-03	2.05E-02
Comp Mole Frac (224-Mpentane)	2.48E-05	6.15E-03	6.82E-03	6.82E-03	7.04E-04	8.25E-03
Comp Mole Frac (Benzene)	1.38E-04	1.04E-02	1.04E-02	1.04E-02	3.17E-03	1.28E-02
Comp Mole Frac (Toluene)	1.75E-04	3.90E-02	3.90E-02	3.90E-02	1.79E-03	5.52E-02
Comp Mole Frac (E-Benzene)	2.96E-06	1.42E-03	1.42E-03	1.42E-03	4.37E-05	2.08E-03
Comp Mole Frac (m-Xylene)	2.52E-05	6.28E-02	6.28E-02	6.28E-02	1.61E-03	9.10E-02
Comp Mole Frac (o-Xylene)	6.03E-06	6.40E-03	6.40E-03	6.40E-03	1.51E-04	9.38E-03
Comp Mole Frac (n-Octane)	1.30E-04	6.00E-02	6.00E-02	6.00E-02	2.19E-03	8.75E-02
Comp Mole Frac (n-Nonane)	3.09E-06	4.15E-02	4.15E-02	4.15E-02	6.01E-04	6.10E-02
Comp Mole Frac (n-Decane)	2.60E-05	9.57E-02	9.57E-02	9.57E-02	8.95E-04	0.110846142
Molecular Weight	1.97E+01	8.20E+01	8.20E+01	8.20E+01	4.06E+01	1.02E+02
Comp Mass Frac (CO2)	6.09E-02	4.93E-03	4.93E-03	4.93E-03	3.02E-02	1.30E-04
Comp Mass Frac (Nitrogen)	2.34E-03	2.42E-05	2.42E-05	2.42E-05	1.51E-04	6.43E-09
Comp Mass Frac (Methane)	6.91E-01	2.18E-02	2.18E-02	2.18E-02	0.125748828	2.05E-04
Comp Mass Frac (Ethane)	1.04E-01	1.65E-02	1.65E-02	1.65E-02	9.84E-02	8.91E-04
Comp Mass Frac (Propane)	7.98E-02	3.63E-02	3.63E-02	3.63E-02	1.99E-01	5.72E-03
Comp Mass Frac (i-Butane)	1.87E-02	2.31E-02	2.31E-02	2.31E-02	9.78E-02	8.97E-03
Comp Mass Frac (n-Butane)	2.10E-02	3.82E-02	3.82E-02	3.82E-02	1.34E-01	2.26E-02
Comp Mass Frac (i-Pentane)	9.00E-03	3.61E-02	3.61E-02	3.61E-02	8.08E-02	2.76E-02
Comp Mass Frac (n-Pentane)	7.32E-03	3.87E-02	3.87E-02	3.87E-02	7.06E-02	3.28E-02
Comp Mass Frac (Cyclopentane)	0.00E+00	0.00E+00	0.00E+00	0.00E+00	0.00E+00	0.00E+00
Comp Mass Frac (n-Hexane)	2.76E-03	4.29E-02	4.29E-02	4.29E-02	2.02E-02	4.58E-02
Comp Mass Frac (Cyclohexane)	5.62E-04	1.17E-02	1.17E-02	1.17E-02	4.38E-03	1.37E-02
Comp Mass Frac (22-Mbutane)	1.80E-04	1.55E-03	1.55E-03	1.55E-03	1.91E-03	1.49E-03
Comp Mass Frac (23-Mbutane)	7.12E-04	7.40E-03	7.40E-03	7.40E-03	7.42E-03	7.40E-03
Comp Mass Frac (2-Mpentane)	2.14E-03	2.43E-02	2.43E-02	2.43E-02	2.24E-02	2.47E-02
Comp Mass Frac (3-Mpentane)	1.08E-03	1.38E-02	1.38E-02	1.38E-02	1.14E-02	1.42E-02
Comp Mass Frac (n-Heptane)	4.59E-03	2.00E-01	2.00E-01	2.00E-01	4.57E-02	2.30E-01
Comp Mass Frac (Mcyclohexane)	4.29E-04	1.73E-02	1.73E-02	1.73E-02	4.35E-03	1.98E-02
Comp Mass Frac (224-Mpentane)	2.02E-04	8.11E-03	8.11E-03	8.11E-03	1.98E-03	9.27E-03
Comp Mass Frac (Benzene)	5.45E-04	9.89E-03	9.89E-03	9.89E-03	6.10E-03	1.05E-02
Comp Mass Frac (Toluene)	8.18E-04	4.39E-02	4.39E-02	4.39E-02	6.80E-03	5.06E-02
Comp Mass Frac (E-Benzene)	1.21E-05	1.84E-03	1.84E-03	1.84E-03	1.14E-04	2.17E-03
Comp Mass Frac (m-Xylene)	4.58E-04	8.13E-02	8.13E-02	8.13E-02	4.21E-03	9.59E-02
Comp Mass Frac (o-Xylene)	1.35E-05	8.29E-03	8.29E-03	8.29E-03	3.69E-04	9.79E-03
Comp Mass Frac (n-Octane)	6.52E-04	8.36E-02	8.36E-02	8.36E-02	6.17E-03	9.83E-02
Comp Mass Frac (n-Nonane)	2.01E-04	6.49E-02	6.49E-02	6.49E-02	1.56E-03	7.69E-02
Comp Mass Frac (n-Decane)	2.02E-04	0.165956961	0.165956961	0.165956961	1.32E-03	0.197107401
Total Mass Fractions	1.00E+00	1.00E+00	1.00E+00	1.00E+00	1.00E+00	1.00E+00
Total VOC Mass Fractions	1.43E-01	9.77E-01	9.77E-01	9.57E-01	7.38E-01	9.79E-01
Total HAP Mass Fractions	4.04E-03	1.89E-01	1.89E-01	1.88E-01	4.88E-02	2.15E-01

	Flash-Vap
TPY VOC	3.26E+01
TPY VOC/STB	6.39E+00
Lbs C1/STB	6.40812971
Lbs C2/STB	4.69E+00
Lbs C3+/STB	2.50E+01
Lbs HAP+/STB	1.37E+00
lbs n-Hexane / STB	1.30E+00
lbs Benzene / STB	2.31E-01
lbs Toluene / STB	4.79E-01
lbs E-Benzene / STB	8.41E-03
lbs Xylene / STB	2.10E-01
Molar Flow (MMSCF / STB)	1.45E-04

Pressure, 500 psi
Based on 0.43 MMscfd Gas and 0.27 bpd Condensate

Name	Gas	Condensate	To_Sep	To-Sep1	To-sep2	To-sales	To-tank	To-tank1	To-tank2	Flash-Vap	Stab-cond
Vapour Fraction	1	0	0.982073109	0.983373102	0.981324924	1	0	0.318850604	0.301412154	1	0
Temperature [F]	75	75	75.04336908	75.04345908	75	75	75	35.10976498	75	74.65667157	74.67507157
Pressure [psig]	485.3	485.3	485.3	485.3	485.3	485.3	485.3	-3.196	-4.296	-3.496	-3.496
Molar Flow [MMSCFD]	0.43	6.51E-03	0.436500596	0.436500596	0.436500596	4.29E-01	7.92E-03	7.63E-03	7.92E-03	3.31E-03	4.82E-03
Mass Flow [lb/hr]	932.2079834	61.87845086	994.36475.3	994.36-7543	994.36475.3	920.7857876	67.5816666	67.58189568	67.58189566	3.32730149	57.75485617
Specific Gravity	empty	0.6884413	empty	empty	empty	empty	0.662829728	empty	empty	empty	0.714281184
Liquid Volume Flow [barrels/day]	187.1672065	6.17	193.48720.5	193.4372065	193.4372065	186.3567019	7.06150456	7.06150456	7.06150456	1.916362246	6.145141334
Heat Flow [Btu/hr]	-1772686.867	-53940.86856	-1825870.754	-1825870.754	-1826072.6	-1765411.122	-61111.47795	-61111.47795	-59174.5808	-16784.02027	-42910.5405
Mass Density [lb/ft3]	1.625250508	42.7516188	2.045973681	2.045973681	2.051769357	1.618777888	41.4404019	0.629712264	0.795035455	7.98E-02	44.78829761
Comp Mole Frac (CO2)	2.73E-02	5.90E-04	2.70E-02	2.70E-02	2.70E-02	2.73E-02	1.11E-02	3.11E-02	4.11E-02	2.79E-02	7.10E-04
Comp Mole Frac (Nitrogen)	1.71E-03	1.50E-05	1.69E-03	1.69E-03	1.69E-03	1.72E-03	8.14E-06	0.14E-05	4.14E-05	2.32E-04	2.47E-07
Comp Mole Frac (Methane)	0.849519650	6.39E-02	0.835100917	0.835100917	0.819100917	0.851039856	0.139143329	0.139143329	0.139143329	0.352209.30	1.24E-03
Comp Mole Frac (Ethane)	6.91E-02	4.23E-02	6.77E-02	6.77E-02	6.77E-02	6.50E-02	5.32E-02	5.32E-02	5.32E-02	1.31E-01	2.97E-03
Comp Mole Frac (Propane)	3.17E-02	6.48E-02	3.22E-02	3.22E-02	3.22E-02	3.14E-02	7.66E-02	7.66E-02	7.66E-02	1.18E-01	1.46E-02
Comp Mole Frac (i-Butane)	6.08E-03	3.34E-02	6.76E-03	6.76E-03	6.76E-03	6.23E-03	3.56E-02	2.55E-02	3.55E-02	8.6E-02	1.85E-02
Comp Mole Frac (n-Butane)	7.11E-03	5.67E-02	7.85E-03	7.83E-03	7.82E-03	6.98E-03	5.48E-02	5.48E-02	5.48E-02	9.25E-02	3.05E-02
Comp Mole Frac (i-Pentane)	2.42E-03	4.70E-02	3.08E-03	3.08E-03	3.08E-03	2.37E-03	4.19E-02	4.19E-02	4.19E-02	4.60E-02	3.93E-02
Comp Mole Frac (n-Pentane)	1.94E-03	4.62E-02	2.58E-03	2.68E-03	2.64E-03	1.91E-03	4.43E-02	4.43E-02	4.43E-02	4.01E-02	4.68E-02
Comp Mole Frac (Cyclopentane)	0	0	0	0	0	0	0	0	0	0	0
Comp Mole Frac (n-Hexane)	6.49E-04	4.31E-02	1.28E-03	1.28E-03	1.28E-03	6.09E-04	3.87E-02	3.87E-02	3.87E-02	1.40E-02	5.45E-02
Comp Mole Frac (Cyclohexane)	2.18E-04	0	3.13E-04	3.13E-04	3.13E-04	1.22E-04	1.07E-02	1.07E-02	1.07E-02	7.08E-03	1.56E-02
Comp Mole Frac (22-Mbutane)	4.30E-05	1.50E-03	6.56E-05	6.56E-05	6.56E-05	2.87E-05	1.52E-03	1.52E-03	1.52E-03	9.29E-04	1.91E-03
Comp Mole Frac (23-Mbutane)	1.74E-04	7.35E-03	2.71E-04	2.74E-04	2.74E-04	1.53E-04	6.82E-03	6.82E-03	6.82E-03	3.57E-03	8.91E-03
Comp Mole Frac (2-Mpentane)	4.63E-04	2.58E-02	8.67E-04	8.67E-04	8.67E-04	4.60E-04	2.23E-02	2.23E-02	2.23E-02	1.05E-02	2.96E-02
Comp Mole Frac (3-Mpentane)	2.61E-04	1.39E-02	4.54E-04	4.54E-04	4.54E-04	2.31E-04	1.25E-02	1.25E-02	1.25E-02	5.46E-03	1.71E-02
Comp Mole Frac (n-Heptane)	5.87E-04	0.197522	3.52E-03	3.52E-03	3.52E-03	5.37E-04	0.145596153	0.145596153	0.145596153	1.55E-02	0.222860784
Comp Mole Frac (Mcyclohexane)	3.22E-04	0.00E+00	3.17E-04	3.17E-04	3.17E-04	7.92E-05	1.32E-02	1.32E-02	1.32E-02	1.81E-03	2.06E-02
Comp Mole Frac (224-Mpentane)	3.80E-04	7.09E-03	1.28E-04	1.28E-04	1.28E-04	9.24E-05	5.30E-03	5.30E-03	5.30E-03	7.56E-04	8.27E-03
Comp Mole Frac (Benzene)	1.49E-04	1.09E-02	3.03E-04	3.03E-04	3.03E-04	1.27E-04	9.82E-03	9.52E-03	9.82E-03	3.23E-03	1.41E-02
Comp Mole Frac (Toluene)	1.74E-04	4.23E-02	8.02E-04	8.02E-04	8.02E-04	1.80E-04	3.55E-02	3.56E-02	3.55E-02	3.63E-03	5.69E-02
Comp Mole Frac (E-Benzene)	5.00E-06	1.51E-03	2.62E-05	2.62E-05	2.62E-05	2.11E-05	1.27E-03	1.27E-03	1.27E-03	4.34E-05	2.08E-03
Comp Mole Frac (m-Xylene)	4.10E-05	7.00E-02	1.10E-05	1.10E-05	1.10E-03	8.00E-06	3.01E-02	3.01E-02	5.61E-02	1.70E-03	9.13E-02
Comp Mole Frac (o-Xylene)	6.00E-06	7.67E-03	1.11E-04	1.11E-04	1.12E-04	7.59E-06	6.71E-03	6.71E-03	5.71E-03	1.61E-04	9.10E-03
Comp Mole Frac (n-Octane)	1.37E-04	9.38E-02	1.09E-03	1.09E-03	1.09E-03	1.14E-04	6.37E-02	6.37E-02	6.37E-02	2.16E-02	2.69E-02
Comp Mole Frac (n-Nonane)	5.90E-05	4.30E-02	6.99E-04	6.99E-04	6.99E-04	3.01E-05	3.69E-02	3.69E-02	3.69E-02	4.99E-04	6.04E-02
Comp Mole Frac (n-Decane)	0.00E+00	0.105364	1.57E-03	1.57E-03	1.57E-03	2.92E-05	8.49E-02	8.49E-02	8.49E-02	3.94E-04	0.139601424
Molecular Weight	1.97E+01	9.67E+01	2.07E+01	2.07E+01	2.07E+01	1.97E+01	7.78E+01	7.78E+01	7.78E+01	4.04E+01	1.02E+02
Comp Mass Frac (CO2)	6.08E-02	2.69E-03	5.73E-02	5.73E-02	5.73E-02	6.10E-02	6.30E-03	6.30E-03	6.30E-03	3.03E-02	1.30E-04
Comp Mass Frac (Nitrogen)	2.43E-03	4.84E-06	2.28E-03	2.28E-03	2.28E-03	2.44E-03	3.30E-06	3.30E-06	3.30E-06	1.51E-04	6.81E-08
Comp Mass Frac (Methane)	6.90E-01	1.18E-02	6.48E-01	6.48E-01	6.48E-01	6.91E-01	2.88E-02	2.88E-02	2.88E-02	0.138816947	2.11E-04
Comp Mass Frac (Ethane)	1.04E-01	1.47E-02	9.82E-02	9.82E-02	9.83E-02	1.04E-01	2.06E-02	2.06E-02	2.06E-02	9.73E-02	8.76E-04
Comp Mass Frac (Propane)	7.08E-02	5.29E-02	6.84E-02	6.84E-02	6.84E-02	7.02E-02	4.35E-02	4.35E-02	4.35E-02	1.88E-01	6.33E-03
Comp Mass Frac (i-Butane)	1.87E-02	2.27E-02	1.89E-02	1.89E-02	1.89E-02	1.84E-02	2.68E-02	2.68E-02	2.67E-02	8.60E-02	8.76E-03
Comp Mass Frac (n-Butane)	2.09E-02	3.79E-02	2.19E-02	2.19E-02	2.10E-02	2.05E-02	4.11E-02	4.11E-02	4.11E-02	1.30E-01	1.74E-02
Comp Mass Frac (i-Pentane)	8.87E-03	3.61E-02	1.07E-02	1.07E-02	1.07E-02	8.67E-03	3.90E-02	3.90E-02	3.90E-02	8.20E-02	2.79E-02
Comp Mass Frac (n-Pentane)	7.29E-03	4.01E-02	9.33E-03	9.33E-03	9.33E-03	7.00E-03	4.12E-02	4.12E-02	4.12E-02	7.21E-02	3.32E-02
Comp Mass Frac (Cyclopentane)	0.00E+00	0.00E+00	0.00E+00	0.00E+00	0.00E+00	0.00E+00	0.00E+00	0.00E+00	0.00E+00	0.00E+00	0.00E+00
Comp Mass Frac (n-Hexane)	2.89E-03	4.29E-02	5.32E-03	5.32E-03	5.32E-03	2.66E-03	4.30E-02	4.30E-02	4.30E-02	2.98E-02	4.61E-02
Comp Mass Frac (Cyclohexane)	1.36E-03	0.00E+00	1.27E-03	1.27E-03	1.27E-03	5.20E-04	1.16E-02	1.16E-02	1.16E-02	6.30E-03	1.29E-02
Comp Mass Frac (22-Mbutane)	1.82E-04	1.55E-03	2.72E-04	2.72E-04	2.72E-04	1.60E-04	1.69E-03	1.69E-03	1.69E-03	1.08E-03	1.62E-03
Comp Mass Frac (23-Mbutane)	7.16E-04	7.60E-03	1.14E-03	1.14E-03	1.14E-03	6.69E-04	7.57E-03	7.57E-03	7.57E-03	7.61E-03	7.56E-03
Comp Mass Frac (2-Mpentane)	2.13E-03	2.51E-02	3.58E-03	3.58E-03	3.58E-03	2.01E-03	2.46E-02	2.44E-02	2.48E-02	2.20E-02	2.50E-02
Comp Mass Frac (3-Mpentane)	1.10E-03	1.38E-02	1.89E-03	1.89E-03	1.80E-03	1.01E-03	1.39E-02	1.39E-02	1.39E-02	1.17E-02	1.45E-02
Comp Mass Frac (n-Heptane)	2.99E-03	2.29E-01	1.70E-02	1.70E-02	1.70E-02	4.28E-03	1.92E-01	1.92E-01	1.92E-01	4.50E-02	2.21E-01
Comp Mass Frac (Mcyclohexane)	1.60E-03	0.00E+00	1.50E-03	1.50E-03	1.50E-03	3.90E-04	1.67E-02	1.67E-02	1.67E-02	4.48E-03	1.99E-02
Comp Mass Frac (224-Mpentane)	2.20E-04	9.02E-03	7.06E-04	7.06E-04	7.06E-04	1.86E-04	7.81E-03	7.81E-03	7.81E-03	1.92E-03	9.30E-03
Comp Mass Frac (Benzene)	5.89E-04	9.44E-03	1.14E-03	1.14E-03	1.14E-03	5.03E-04	9.89E-03	9.89E-03	7.81E-03	5.25E-03	1.08E-02
Comp Mass Frac (Toluene)	8.12E-04	4.40E-02	3.56E-03	3.56E-03	3.56E-03	7.50E-04	4.21E-02	4.21E-02	4.21E-02	5.05E-03	5.07E-02
Comp Mass Frac (E-Benzene)	2.69E-05	1.66E-03	1.29E-04	1.29E-04	1.29E-04	1.14E-05	1.74E-03	1.74E-03	1.74E-03	1.14E-04	2.16E-03
Comp Mass Frac (m-Xylene)	2.20E-04	8.68E-02	1.02E-03	5.62E-03	5.62E-03	4.31E-04	7.67E-02	7.67E-02	7.67E-02	4.10E-03	9.54E-02
Comp Mass Frac (o-Xylene)	3.23E-05	8.65E-03	5.69E-04	5.07E-04	5.69E-04	4.09E-05	7.82E-03	7.82E-03	7.82E-03	5.07E-04	9.72E-03
Comp Mass Frac (n-Octane)	7.92E-04	3.40E-02	5.98E-03	5.98E-03	5.98E-03	6.59E-04	7.90E-02	7.90E-02	7.90E-02	6.16E-03	8.77E-02
Comp Mass Frac (n-Nonane)	3.80E-04	0.30E-02	4.32E-03	4.32E-03	4.32E-03	1.96E-04	6.09E-02	6.09E-02	6.09E-02	1.17E-03	7.52E-02
Comp Mass Frac (n-Decane)	0	0.172820942	1.08E-02	1.08E-02	1.08E-02	2.04E-04	0.155695515	0.155695210	0.155695315	1.36E-03	0.196332117
Total Mass Fractions	1.00E+00	1.00E+00	1.00E+00	1.00E+00	1.00E+00	1.00E+00	1.00E+00	1.00E+00	1.00E+00	1.00E+00	1.00E+00
Total VOC Mass Fractions	1.43E-01	9.71E-01	1.94E-01	1.94E-01	1.94E-01	1.39E-01	9.44E-01	9.44E-01	9.44E-01	7.32E-01	9.99E-01
Total HAP Mass Fractions	4.51E-03	1.64E-01	1.63E-02	1.63E-02	1.63E-02	4.31E-03	1.81E-01	1.81E-01	1.81E-01	4.94E-02	2.15E-01

TPY VOC	4.44E+01
TPY VOC/STB	8.82E+00
Lbs C1/STB	0.817998841
Lbs C2/STB	0.275151851
Lbs C3+/STB	4.72E+01
Lbs HAPS/STB	3.19E+00
lbs n-Hexane / STB	1.92E+00
lbs Benzene / STB	4.07E-01
lbs Toluene / STB	5.58E-01
lbs E-Benzene / STB	7.34E-03
lbs Xylene / STB	2.98E-01
Molar Flow (MMSCF / STB)	6.56E-04

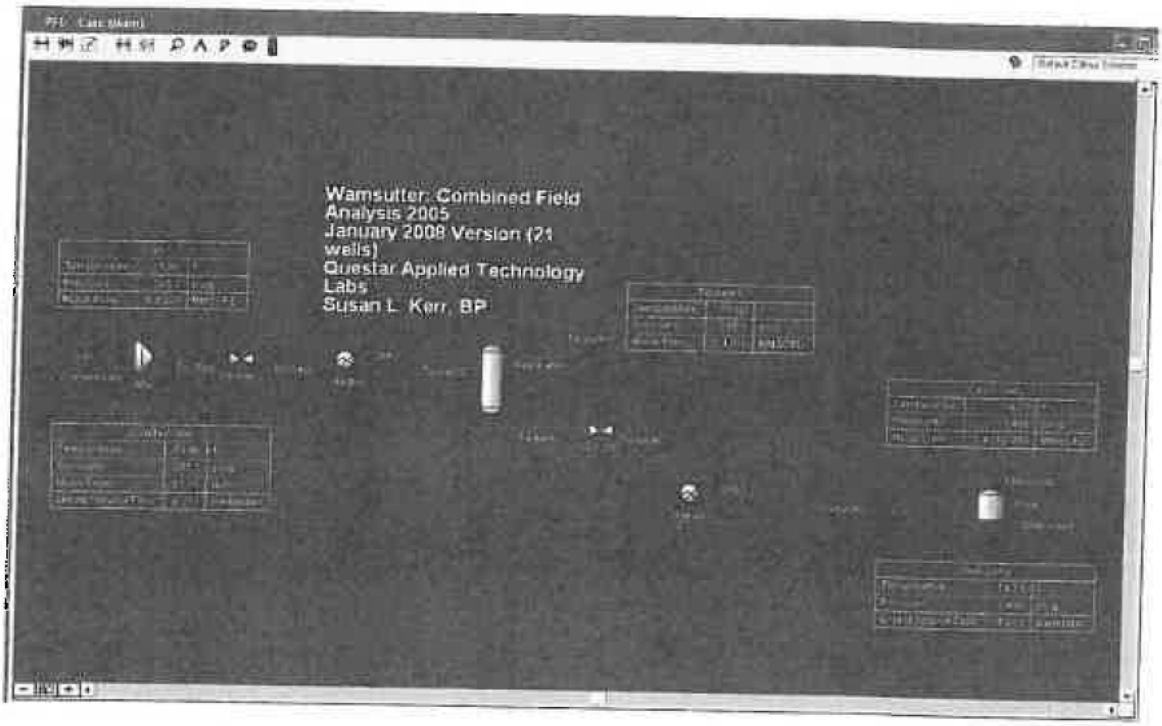
Wamsutter: Combined Field
Analysis 2005
January 2008 Version (21
wells)
Questar Applied Technology
Labs
Susan L. Kerr, BP

D APPENDIX - Tank Calculations in Air Permits

BP America Production Company
Wamsutter Operations Center
Monument Lake 11-50 Pad
Oil & Gas Production Facility
Chapter 6, Section 2 Air Permit Application
10/5/2016

Description: Six Condensate Tanks
Control: Five Smokeless Combustion Chambers

I. Pilot's Source Information

Fuel Heating Value =	1135 Btu/scf
Annual Hours of Operation =	8760 hrs/yr
Pilot Flow Rate =	7.65 scfm

II. Pilot's Criteria Pollutant Emissions Calculations

Pollutant	Emission Factor	Controlled Emissions (lb/hr)	Controlled Emissions (TPY)
NO_x[1]	0.14 lb/MMBtu	0.0730	0.3196
CO[1]	0.035 lb/MMBtu	0.0182	0.0799
PM[2]	7.6 lb/MMscf	0.0035	0.0153
SO_2[2]	0.6 lb/MMscf	0.0003	0.0012
VOC[2]	5.5 lb/MMscf	0.0025	0.0111

[1] Emission factors for NO_x and CO are based on Wyoming DEQ's Oil and Gas Production Facilities Chapter 6, Section 2, Permitting Guidance for flare operations dated 08/07

[2] Emission factors for PM, SO_2, and VOC are based on AP-42, Fifth Edition,Volume 1, Chapter 1, Section 1.4, Table 1.4-1 and 1.4-2, dated 7/98.

III. Condensate Tank's Source Information

Operating Pressure =	462
Average Condensate Production =	351.1 bbl/day
Annual Condensate Production =	128142 bbl/year
Condensate Heating Value[1] =	2289 Btu/scf
Condensate Gas Consumed =	92.03 MMscf/yr

[1] The flash gas heating value will vary. The flash gas heating value is based on the flash gas composition at the operating pressure from the 2008 HYSYS model runs for the Wamsutter Operations Center

IV. Condensate Tank's Criteria Pollutant Emissions Calculations

Pollutant	Emission Factor	Uncontrolled Emissions (lb/hr)	Uncontrolled Emissions (TPY)	Controlled Emissions (lb/hr)	Controlled Emissions (TPY)
NO_x[1]	0.14 lb/MMBtu	-	-	3.3674	14.7491
CO[1]	0.035 lb/MMBtu	-	-	0.8418	3.6873
PM[2]	7.6 lb/MMscf	-	-	0.0798	0.3497
SO2[2]	0.6 lb/MMscf	-	-	0.0063	0.0276
VOC[3]	98% DRE	583.9595	2557.7427	11.6792	51.1549
HAP[3]	98% DRE	34.3462	150.4365	0.6869	3.0087
n-Hexane	98% DRE	21.6292	94.7360	0.4326	1.8947
Benzene	98% DRE	4.6618	20.4186	0.0932	0.4084
Toluene	98% DRE	5.9643	26.1237	0.1193	0.5225
Ethylbenzene	98% DRE	0.1714	0.7507	0.0034	0.0150
Xylene	98% DRE	1.8196	8.1076	0.0384	0.1682

[1] Emission factors for NO_x and CO are based on Wyoming DEQ's Oil and Gas Production Facilities Chapter 6, Section 2, Permitting Guidance for flare operations dated 08/07.

[2] Emission factors for PM and SO_2 are based on AP-42, Fifth Edition,Volume 1, Chapter 1, Section 1.4, Table 1.4-1 and 1.4-2, dated 7/98.

[3] VOC emissions are based on HYSYS model runs for the Wamsutter Operations Center. VOC emissions (TPY) = (0.1131 * tubing pressure (psi) - 12.336) (lb/bbl) * average condensate production (bbl/day) * 365 (days/yr) / 2000 (lbs/ton). HAP emissions (TPY) = (0.0071* tubing pressure (psi) - 0.9325) (lb/bbl) * average condensate production (bbl/day) * 365 (days/yr) / 2000 (lbs/ton). The controlled VOC and HAP emissions are based on a 98% destruction efficiency.

VII. Emissions Summary

Pollutant	Uncontrolled Emissions (lb/hr)	Uncontrolled Emissions (TPY)	Controlled Emissions (lb/hr)	Controlled Emissions (TPY)
NO_x	-	-	3.4403	15.0687
CO	-	-	0.8601	3.7672
PM	-	-	0.0833	0.3650
SO_2	-	-	0.0066	0.0288
VOC	583.9595	2557.7427	11.6817	51.1650
HAP	34.3462	150.4365	0.6869	3.0087

BP America Production Company
Wamsutter Operations Center
Chain Lakes 29-50d Pad
Oil & Gas Production Facility
Chapter 6, Section 2 Air Permit Application
1/12/2017

Description: Four Condensate Tanks
Control: Five Smokeless Combustion Chambers

I. Pilot's Source Information

Fuel Heating Value =	1133 Btu/scf
Annual Hours of Operation =	6760 hrs/yr
Pilot Flow Rate =	7.65 scfm

II. Pilot's Criteria Pollutant Emissions Calculations

Pollutant	Emission Factor	Controlled Emissions (lb/hr)	Controlled Emissions (TPY)
NO_x[1]	0.14 lb/MMBtu	0.0728	0.3189
CO[1]	0.035 lb/MMBtu	0.0182	0.0797
PM[2]	7.6 lb/MMscf	0.0035	0.0153
SO_2[2]	0.6 lb/MMscf	0.0003	0.0012
VOC[2]	5.5 lb/MMscf	0.0025	0.0111

[1] Emission factors for NO_x and CO are based on Wyoming DEQ's Oil and Gas Production Facilities Chapter 6, Section 2, Permitting Guidance for flare operations dated 08/07.

[2] Emission factors for PM, SO_2, and VOC are based on AP-42, Fifth Edition,Volume 1, Chapter 1, Section 1.4, Table 1.4-1 and 1.4-2, dated 7/98.

III. Condensate Tank's Source Information

Operating Pressure =	592
Average Condensate Production =	262.2 bbl/day
Annual Condensate Production =	95688 bbl/year
Condensate Heating Value[1] =	2304 Btu/scf
Condensate Gas Consumed =	94.49 MMscf/yr

[1] The flash gas heating value will vary. The flash gas heating value is based on the flash gas composition at the operating pressure from the 2008 HYSYS model runs for the Wamsutter Operations Center.

IV. Condensate Tank's Criteria Pollutant Emissions Calculations

Pollutant	Emission Factor	Uncontrolled Emissions (lb/hr)	Uncontrolled Emissions (TPY)	Controlled Emissions (lb/hr)	Controlled Emissions (TPY)
NO_x[1]	0.14 lb/MMBtu	-	-	3.4800	15.2424
CO[1]	0.035 lb/MMBtu	-	-	0.8700	3.8106
PM[2]	7.6 lb/MMscf	-	-	0.0820	0.3591
SO2[2]	0.6 lb/MMscf	-	-	0.0065	0.0283
VOC[3]	98% DRE	596.9532	2614.6549	11.9391	52.2931
HAP[3]	98% DRE	35.7476	156.5746	0.7150	3.1315
n-Hexane	98% DRE	22.5117	98.6014	0.4502	1.9720
Benzene	98% DRE	4.8520	21.2516	0.0970	0.4250
Toluene	98% DRE	6.2077	27.1896	0.1242	0.5438
Ethylbenzene	98% DRE	0.1784	0.7813	0.0036	0.0156
Xylene	98% DRE	1.9979	8.7507	0.0400	0.1750

[1] Emission factors for NO_x and CO are based on Wyoming DEQ's Oil and Gas Production Facilities Chapter 6, Section 2, Permitting Guidance for flare operations dated 08/07.

[2] Emission factors for PM and SO_2 are based on AP-42, Fifth Edition Volume 1, Chapter 1, Section 1.4, Table 1.4-1 and 1.4-2, dated 7/98.

[3] VOC emissions are based on HYSYS model runs for the Wamsutter Operations Center. VOC emissions (TPY) = (0.1131 * tubing pressure (psi) - 12.336) (lb/bbl) * average condensate production (bbl/day) * 365 (days/yr) / 2000 (lbs/ton). HAP emissions (TPY) = (0.0071* tubing pressure (psi) - 0.9325) (lb/bbl) * average condensate production (bbl/day) * 365 (days/yr) / 2000 (lbs/ton). The controlled VOC and HAP emissions are based on a 98% destruction efficiency.

VII. Emissions Summary

Pollutant	Uncontrolled Emissions (lb/hr)	Uncontrolled Emissions (TPY)	Controlled Emissions (lb/hr)	Controlled Emissions (TPY)
NO_x	-	-	3.5528	15.5613
CO	-	-	0.8882	3.8903
PM	-	-	0.0855	0.3743
SO_2	-	-	0.0067	0.0296
VOC	596.9532	2614.6549	11.9416	52.3042
HAP	35.7476	156.5746	0.7150	3.1315

E APPENDIX - Backpressure Calculations

CHAIN LAKES SITE

Closed Vent System Design and Capacity Assessment Report

FACILITY IDENTIFICATION

Owner / Operator	BP	***County***	Sweetwater
Facility Name	Chain Lakes 29-50d Pad	***State***	Wyoming
Facility Code		***Date***	10/25/2017

OVERALL RESULT **PASS**

CERTIFICATION

I certify that the closed vent system design and capacity assessment was prepared under my direction and supervision. I further certify that the closed vent system design and capacity assessment was conducted and this report was prepared pursuant to the requirements of subpart OOOOa of 40 CFR part 60. Based on my professional knowledge and experience, and inquiry of personnel involved in the assessment, the certification submitted herein is true, accurate, and complete. I am aware that there are penalties for knowingly submitting false information.

Professional Engineer Name
State of Registration
Registration Number

Signature ***Date*** 10/26/2017

Affix Seal Here
Date 10/26/2017

Professional Engineer
PATRICK J. SMITH
WYOMING

Closed Vent System Design and Capacity Assessment Report

SIMULATION INFORMATION

ProMax File	ChainLakes.pmx
Flowsheet	Atmospheric Tank
Stream	Tank Inlet

FLOW BASIS

Basis	Simulation
Flow Multiplier	2.79

VALVE PARAMETERS

USER INPUT FLOWS

Specified Vapor	*MSCFD*	111.4
Specified Liquid	*bbl/d*	1151.6

CALCULATED FLOWS

Nominal Vapor	*MSCFD*	105.2
Peak Vapor	*MSCFD*	310.9
Vapor Heating Value	*MMBtu/h*	36.8
Nominal Liquid	*bbl/d*	1151.6
Peak Liquid	*bbl/d*	3213.1

VENT SYSTEM PARAMETERS

Flow Correlation	Spitzglass Low P	
Tank Temperature	*°F*	100
Atmospheric Pressure	*psia*	14.7
Relief Pressure	*oz/in² (g)*	12
Control Device DP	*oz/in²*	4
Elevation Change	*ft*	20
Collected Liquid Height	*in*	0.1

NOTES

TANK RESULTS

Tank	*Tank in Use*	*Pressure oz/in² (g)*	*Pressure psig*	*Relief Frac %*
Tank 1	Yes	7.92	0.495	66.0%
Tank 2	Yes	7.88	0.493	65.7%
Tank 3	Yes	7.88	0.493	65.7%
Tank 5	Yes	8.39	0.524	69.9%
Tank 6	Yes	8.39	0.524	69.9%
Tank 7	Yes	8.35	0.522	69.6%
Tank 8	Yes	8.27	0.517	68.9%

VENT LINE PARAMETERS

Pipe #	*Pipe ID in*	*Length ft*	*# Fittings*	*Flow MSCFD*	*Pressure oz/in² (g)*
1	**4**	**15.76**	**3**	**44.4**	**7.92**
2	**4**	**0.93**	**1**	**44.4**	**7.88**
3	**4**	**0.93**	**1**	**44.4**	**7.88**
4					
5	**6**	**15.65**	**2**	**44.4**	**8.39**
6	**6**	**1.23**	**2**	**44.4**	**8.39**
7	**6**	**1.23**	**2**	**44.4**	**8.35**
8	**6**	**1.23**	**4**	**44.4**	**8.27**
9		**0**	**0**	**88.8**	**7.87**
10					
11		**0**	**0**	**133.2**	**7.87**
12	**6**	**7.58**	**4**	**88.8**	**8.38**
13	**6**	**14.42**	**4**	**133.2**	**8.35**
14	**6**	**30.67**	**10**	**177.7**	**8.26**
15	**6**	**87.64**	**24**	**310.9**	**7.87**

VENT SYSTEM CONFIGURATION

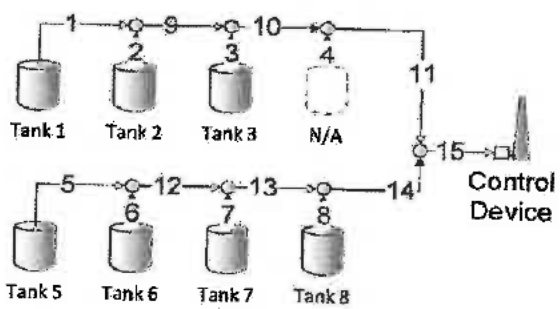

Simulated by: ProMax® 4.0.16308.0

Owner / Operator	BP
Facility Name	Chain Lakes 29-50d Pad
Facility Code	

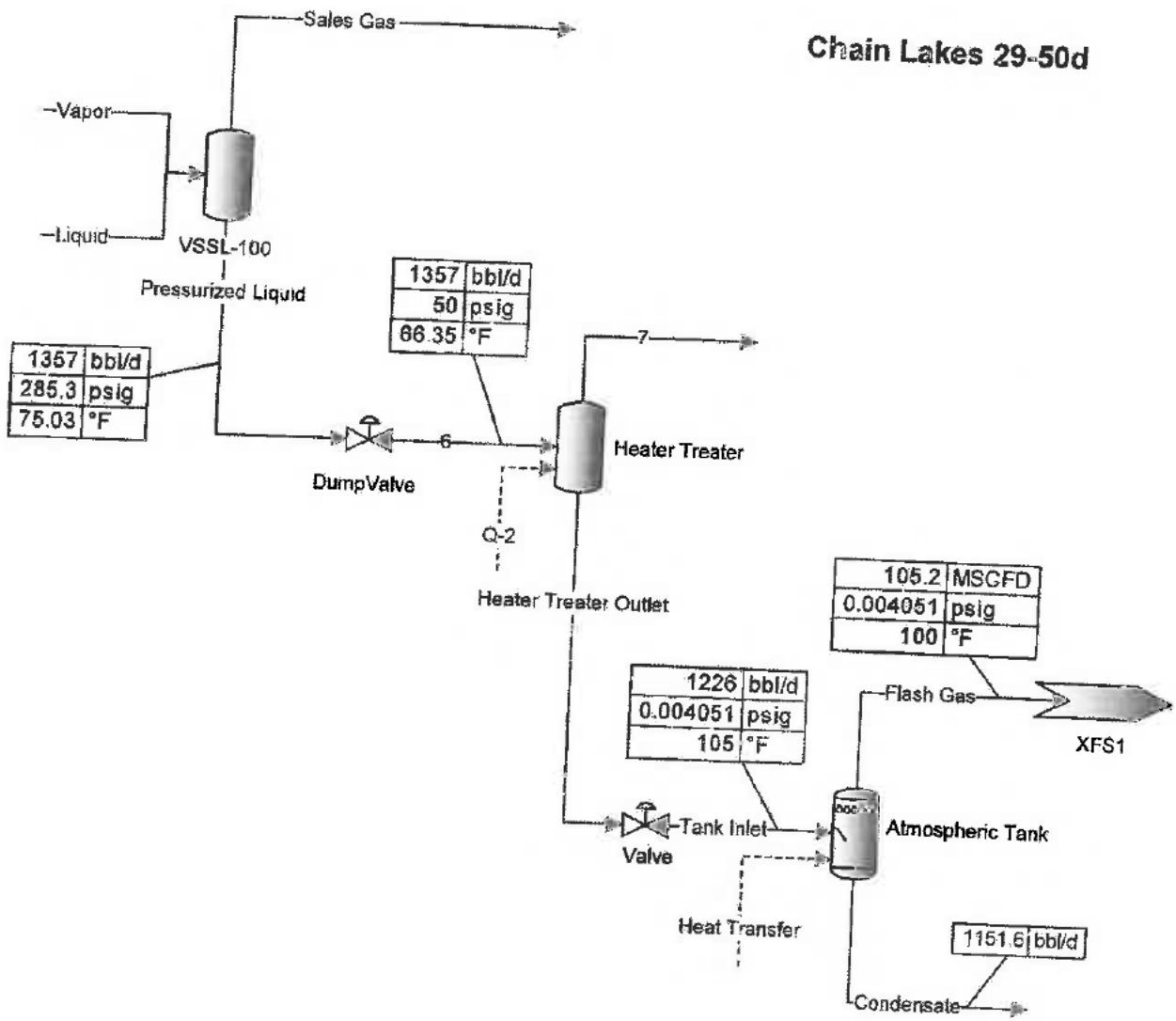
Chain Lakes 29-50d
Sales Gas
Vapor
Liquid
VSSL-100
Pressurized Liquid
1357 bbl/d
285.3 psig
75.03 °F
1357 bbl/d
50 psig
66.35 °F
7
6
DumpValve
Heater Treater
Q-2
Heater Treater Outlet
105.2 MSCFD
0.004051 psig
100 °F
Flash Gas
XFS1
1226 bbl/d
0.004051 psig
105 °F
Tank Inlet
Valve
Atmospheric Tank
Heat Transfer
1151.6 bbl/d
Condensate

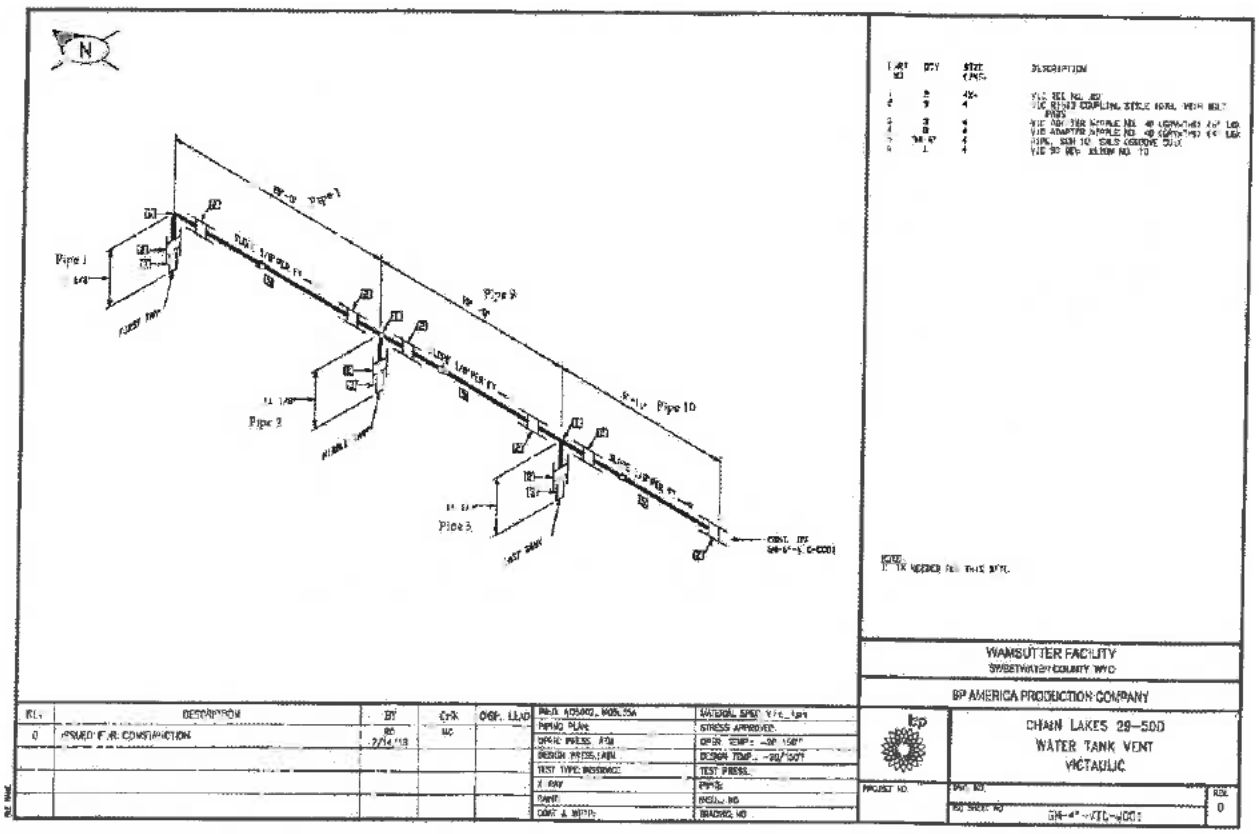
N
Pipe 1
Pipe 2
Pipe 3
Pipe 9
Pipe 10
WAMSUTTER FACILITY
SWEETWATER COUNTY, WYO
BP AMERICA PRODUCTION COMPANY
CHAIN LAKES 29-50D
WATER TANK VENT
VICTAULIC
ISSUED FOR CONSTRUCTION

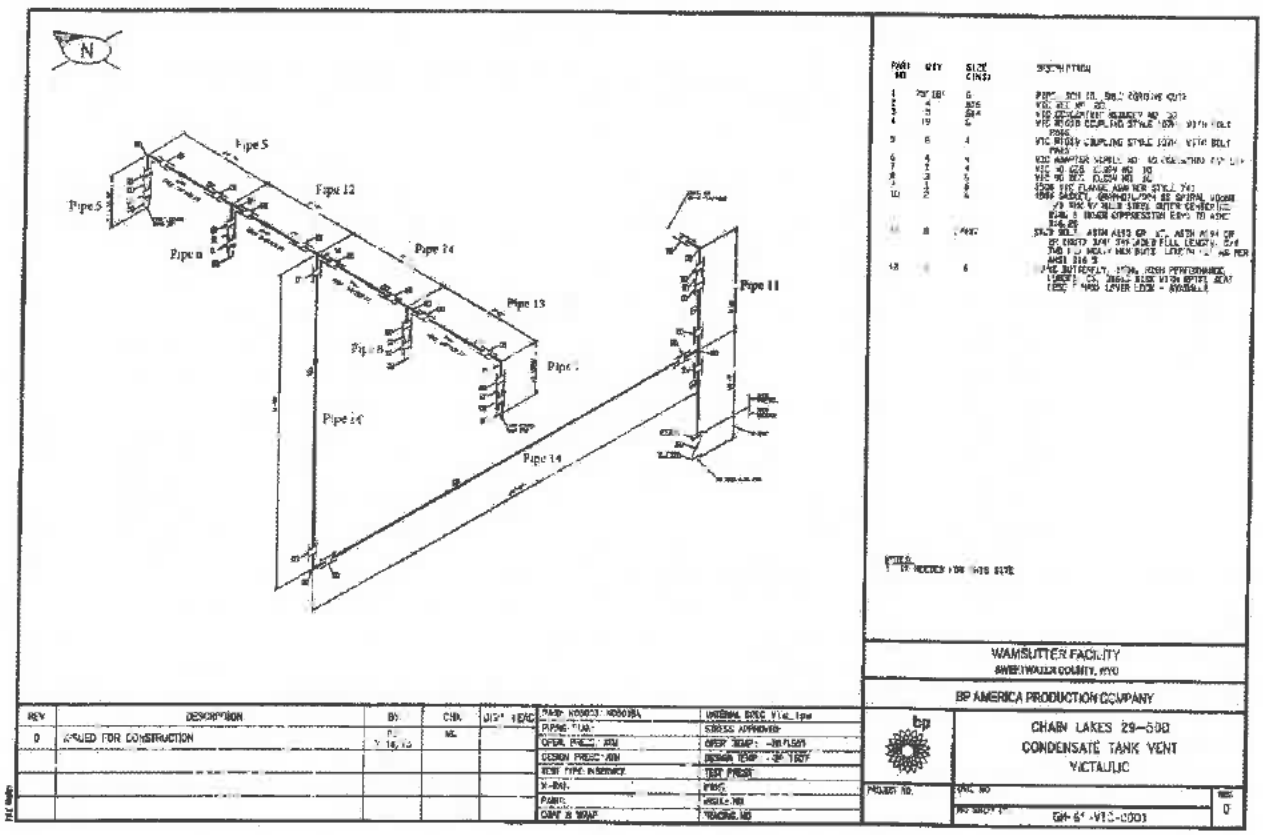
N
Pipe 5
Pipe 12
Pipe 5
Pipe 11
Pipe 14
Pipe 13
Pipe 11
Pipe 14
WAMSUTTER FACILITY
SWEETWATER COUNTY, WYO
BP AMERICA PRODUCTION COMPANY
CHAIN LAKES 29-50D
CONDENSATE TANK VENT
VICTALIC
REV
DESCRIPTION
0
ISSUED FOR CONSTRUCTION

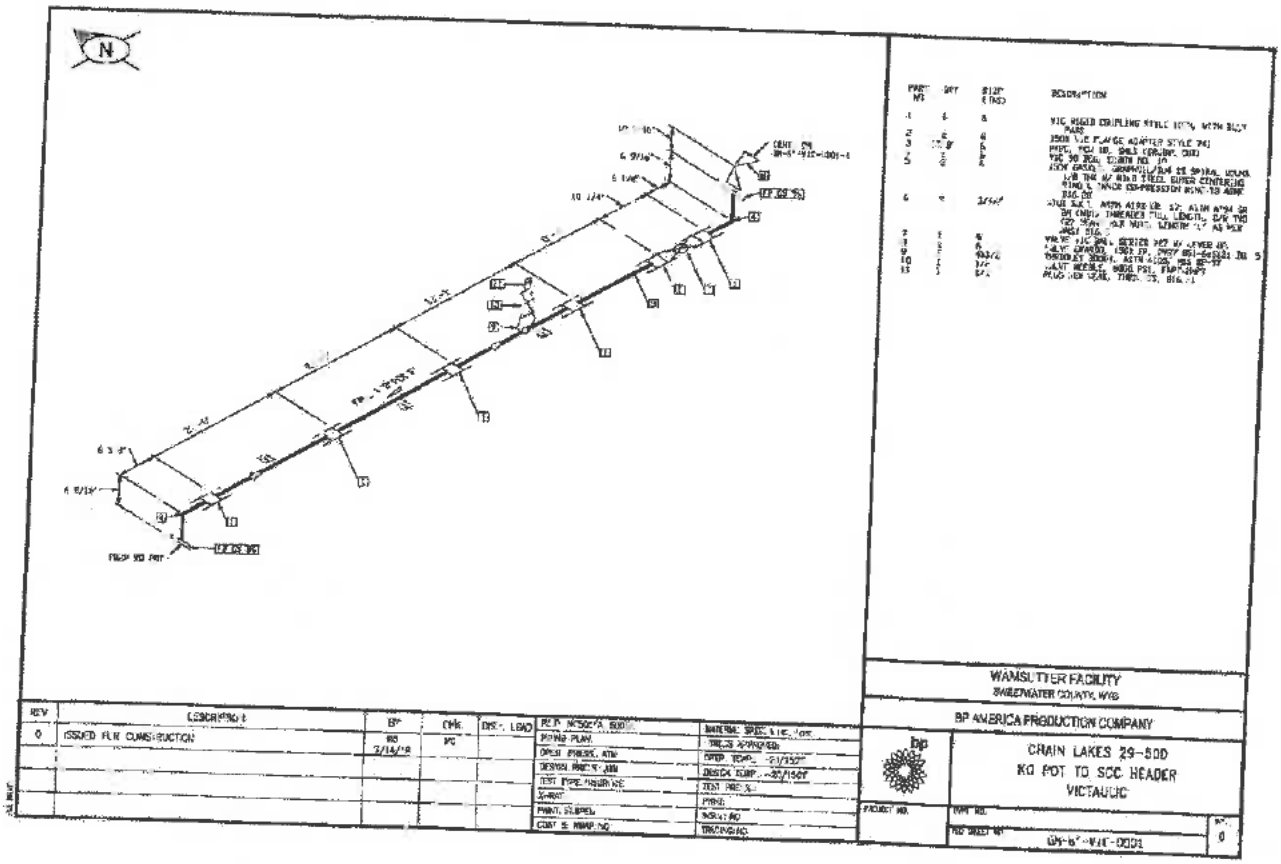
N
WAMSUTTER FACILITY
SWEETWATER COUNTY, WYO
BP AMERICA PRODUCTION COMPANY
CHAIN LAKES 29-50D
KO POT TO SCC HEADER
VICTAULIC

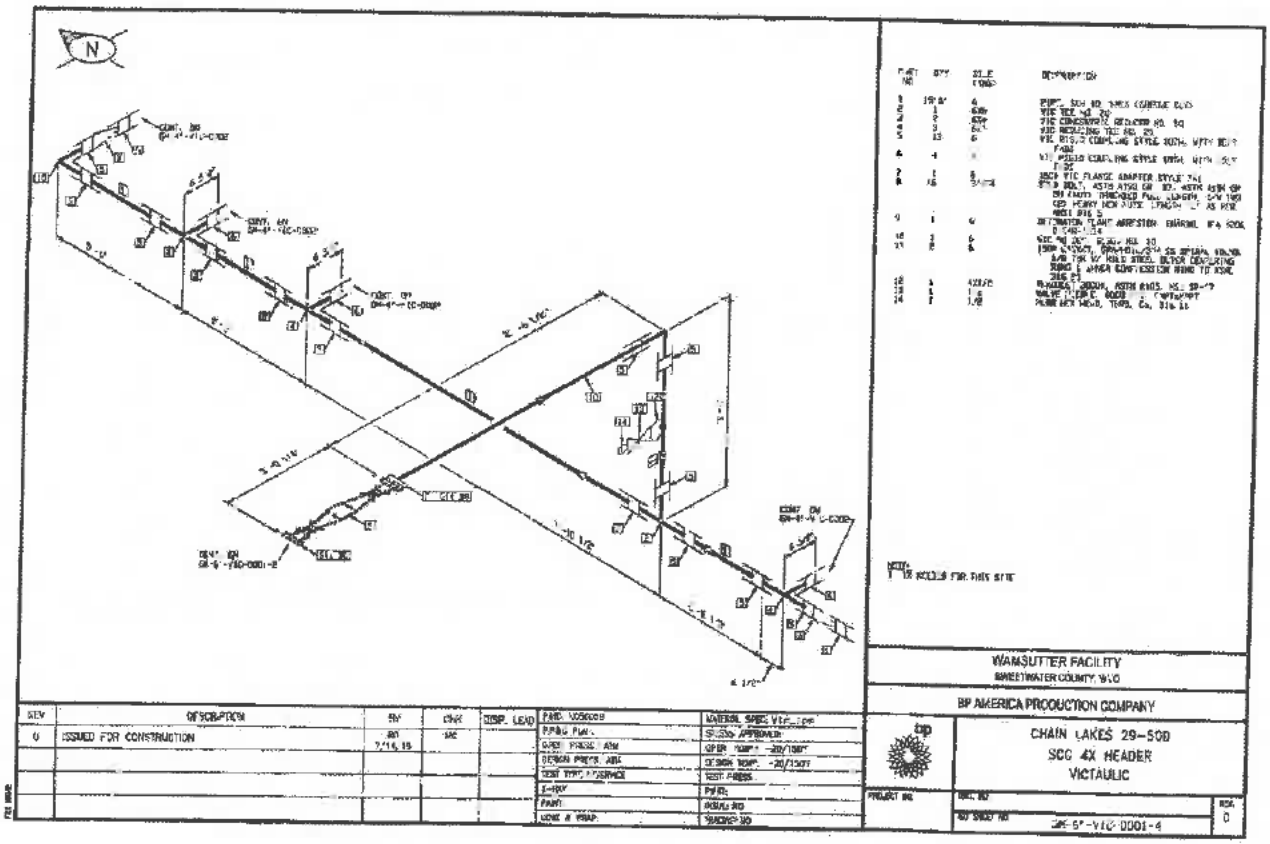
N
WAMSUTTER FACILITY
SWEETWATER COUNTY, WYO
BP AMERICA PRODUCTION COMPANY
CHAIN LAKES 29-50D
SCG 4X HEADER
VICTAULIC
ISSUED FOR CONSTRUCTION

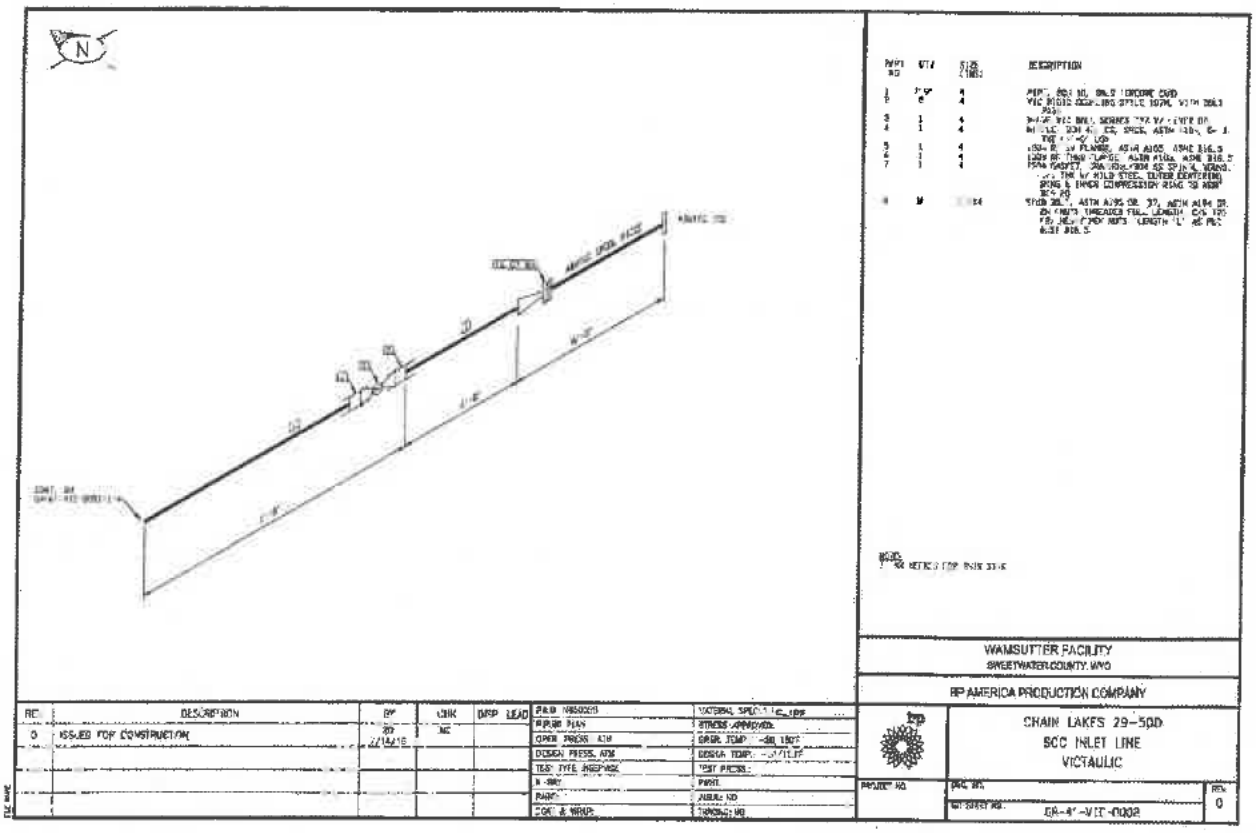
N
DESCRIPTION
WAMSUTTER FACILITY
SWEETWATER COUNTY, WYO
BP AMERICA PRODUCTION COMPANY
CHAIN LAKES 29-50D
SCC INLET LINE
VICTAULIC
ISSUED FOR CONSTRUCTION

MONUMENT SITE

Closed Vent System Design and Capacity Assessment Report

FACILITY IDENTIFICATION

Owner / Operator	BP	***County***	Sweetwater
Facility Name	Monument	***State***	Wyoming
Facility Code		***Date***	10/19/2017

OVERALL RESULT **PASS**

CERTIFICATION

I certify that the closed vent system design and capacity assessment was prepared under my direction and supervision. I further certify that the closed vent system design and capacity assessment was conducted and this report was prepared pursuant to the requirements of subpart OOOOa of 40 CFR part 60. Based on my professional knowledge and experience, and inquiry of personnel involved in the assessment, the certification submitted herein is true, accurate, and complete. I am aware that there are penalties for knowingly submitting false information.

Professional Engineer (General) REFERENCE BRUNETTE 10/26/2017 WYOMING

Professional Engineer Name
State of Registration
Registration Number

Date 10/26/2017

Signature ***Date*** 10-26-2017

Affix Seal Here

Closed Vent System Design and Capacity Assessment Report

SIMULATION INFORMATION

ProMax File	Monument_v2.pmx
Flowsheet	Atmospheric Tank
Stream	Tank Inlet

FLOW BASIS

Basis	Simulation
Flow Multiplier	2.79

VALVE PARAMETERS

USER INPUT FLOWS

Specified Vapor	*MSCFD*	111.4
Specified Liquid	*bbl/d*	1151.6

CALCULATED FLOWS

Nominal Vapor	*MSCFD*	105.2
Peak Vapor	*MSCFD*	310.9
Vapor Heating Value	*MMBtu/h*	36.8
Nominal Liquid	*bbl/d*	1151.6
Peak Liquid	*bbl/d*	3213.1

VENT SYSTEM PARAMETERS

Flow Correlation	Maximum	
Tank Temperature	*°F*	100
Atmospheric Pressure	*psia*	14.7
Relief Pressure	*oz/in² (g)*	12
Control Device DP	*oz/in²*	4
Elevation Change	*ft*	20
Collected Liquid Height	*in*	0.1

NOTES

TANK RESULTS

Tank	*Tank in Use*	*Pressure oz/in² (g)*	*Pressure psig*	*Relief Frac %*
Tank 1	Yes	8.02	0.501	66.9%
Tank 4	Yes	7.96	0.497	66.3%
Tank 5	Yes	8.06	0.504	67.1%
Tank 6	Yes	8.05	0.503	67.1%
Tank 7	Yes	8.03	0.502	66.9%

VENT LINE PARAMETERS

Pipe #	*Pipe ID in*	*Length ft*	*# Fittings*	*Flow MSCFD*	*Pressure oz/in² (g)*
1	**4**	**32.43**	**3**	**62.2**	**8.02**
2					
3					
4	**4**	**0.76**	**2**	**62.2**	**7.96**
5	**6**	**17.32**	**2**	**62.2**	**8.06**
6	**6**	**1.23**	**2**	**62.2**	**8.05**
7	**6**	**1.23**	**2**	**62.2**	**8.03**
8					
9					
10					
11	**6**	**16.04**	**2**	**124.4**	**7.91**
12	**6**	**8.08**	**1**	**124.4**	**8.05**
13					
14	**6**	**33.25**	**3**	**186.6**	**8.02**
15	**6**	**86.35**	**24**	**310.9**	**7.86**

VENT SYSTEM CONFIGURATION

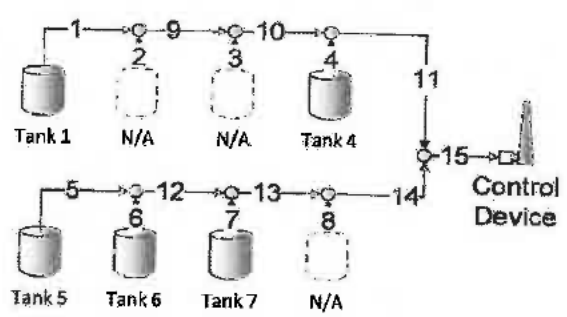

Simulated by: ProMax® 4.0.16308.0

Owner / Operator	BP
Facility Name	Monument
Facility Code	

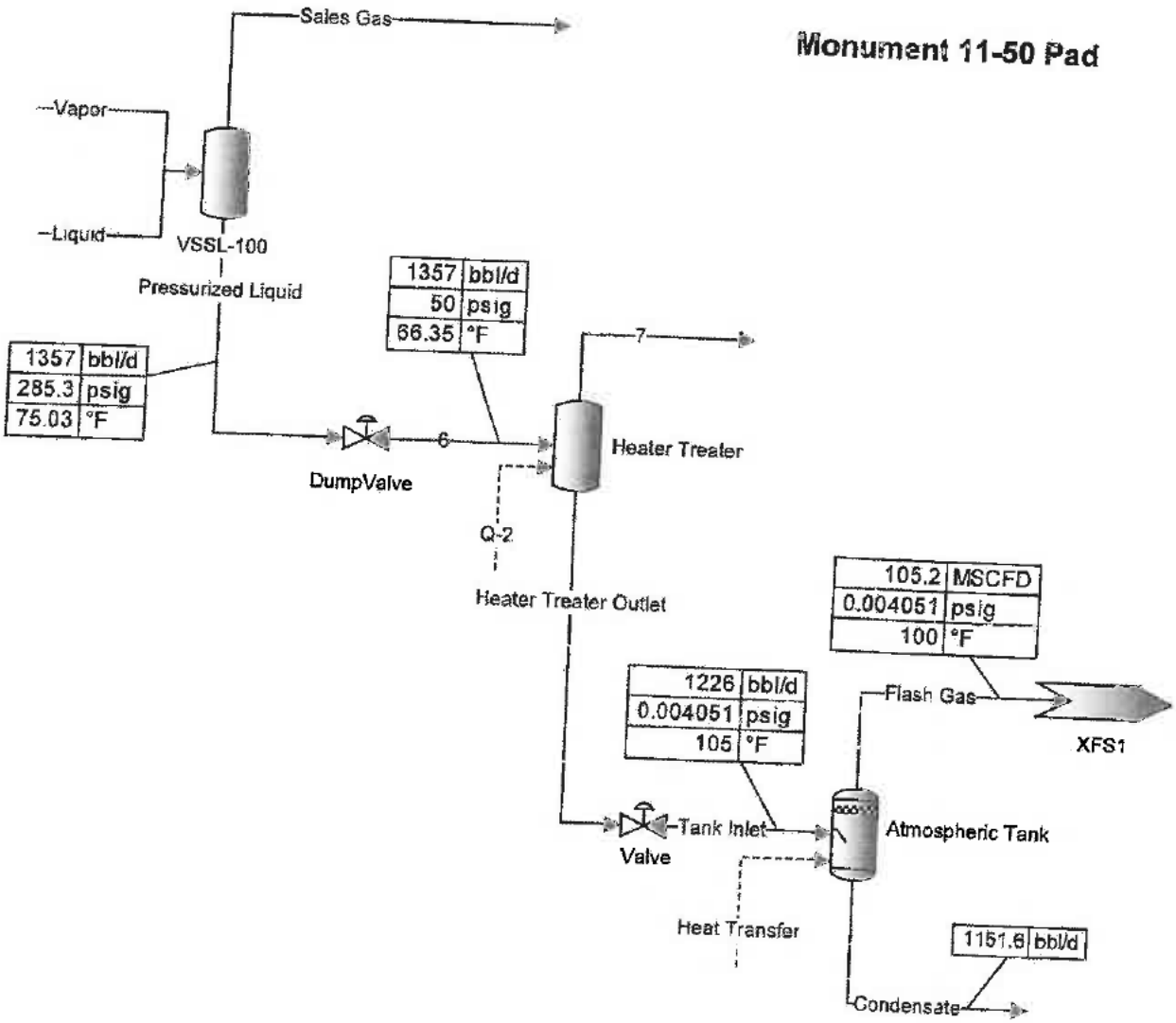
Monument 11-50 Pad
Sales Gas
Vapor
Liquid
VSSL-100
Pressurized Liquid
1357 bbl/d
285.3 psig
75.03 °F
1357 bbl/d
50 psig
66.35 °F
7
6
DumpValve
Heater Treater
Q-2
Heater Treater Outlet
105.2 MSCFD
0.004051 psig
100 °F
1226 bbl/d
0.004051 psig
105 °F
Flash Gas
XFS1
Tank Inlet
Valve
Atmospheric Tank
Heat Transfer
1151.6 bbl/d
Condensate

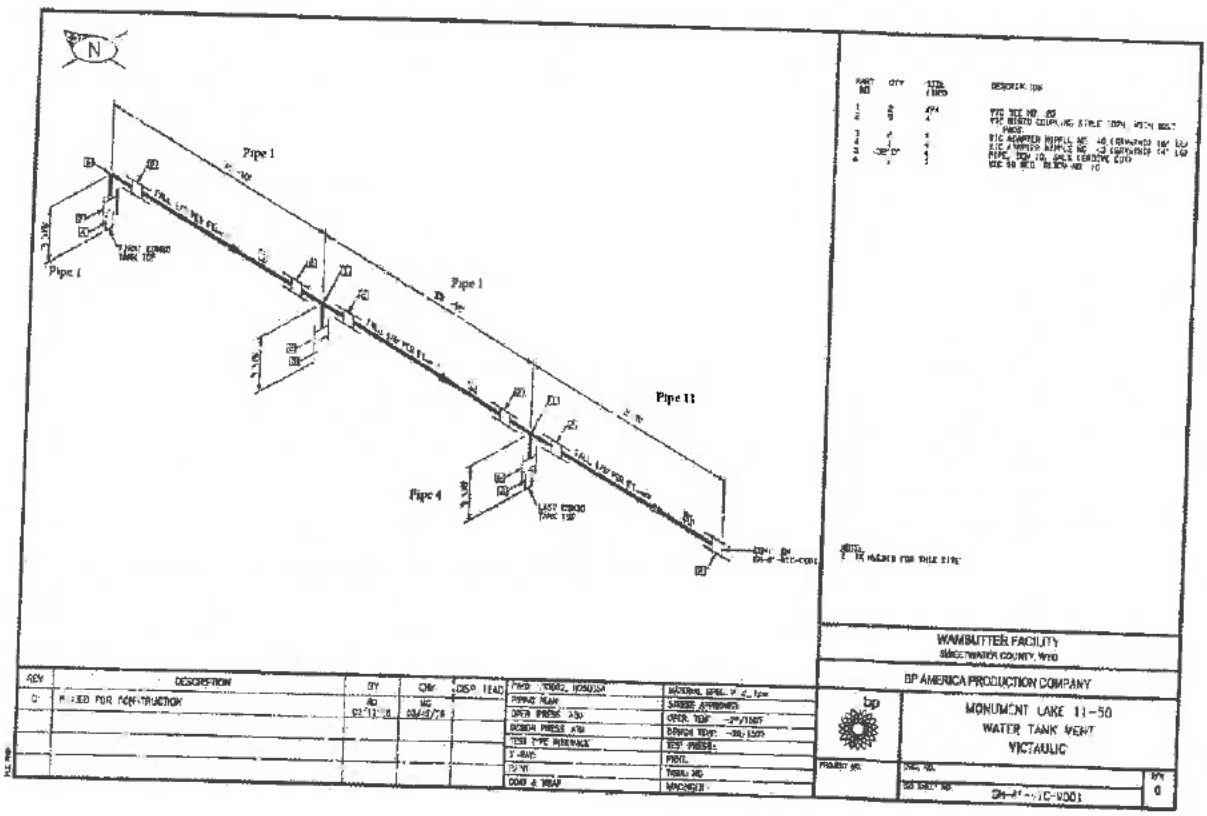
N
Pipe 1
Pipe 1
Pipe 1
Pipe 11
Pipe 4
WAMBUTTER FACILITY
BP AMERICA PRODUCTION COMPANY
MONUMENT LAKE 11-50
WATER TANK VENT
VICTAULIC

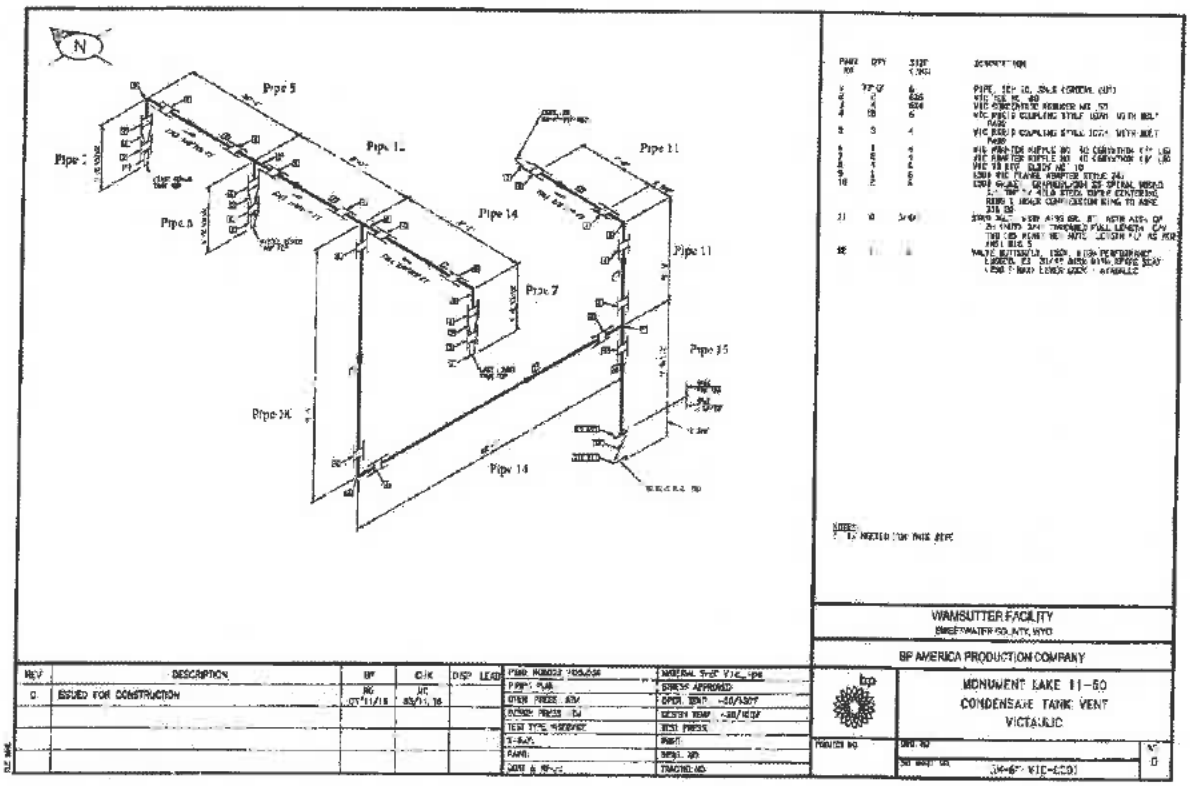
N
Pipe 5
Pipe 7
Pipe 14
Pipe 11
WAMSUTTER FACILITY
BP AMERICA PRODUCTION COMPANY
MONUMENT LAKE 11-50
CONDENSATE TANK VENT
VICTAULIC

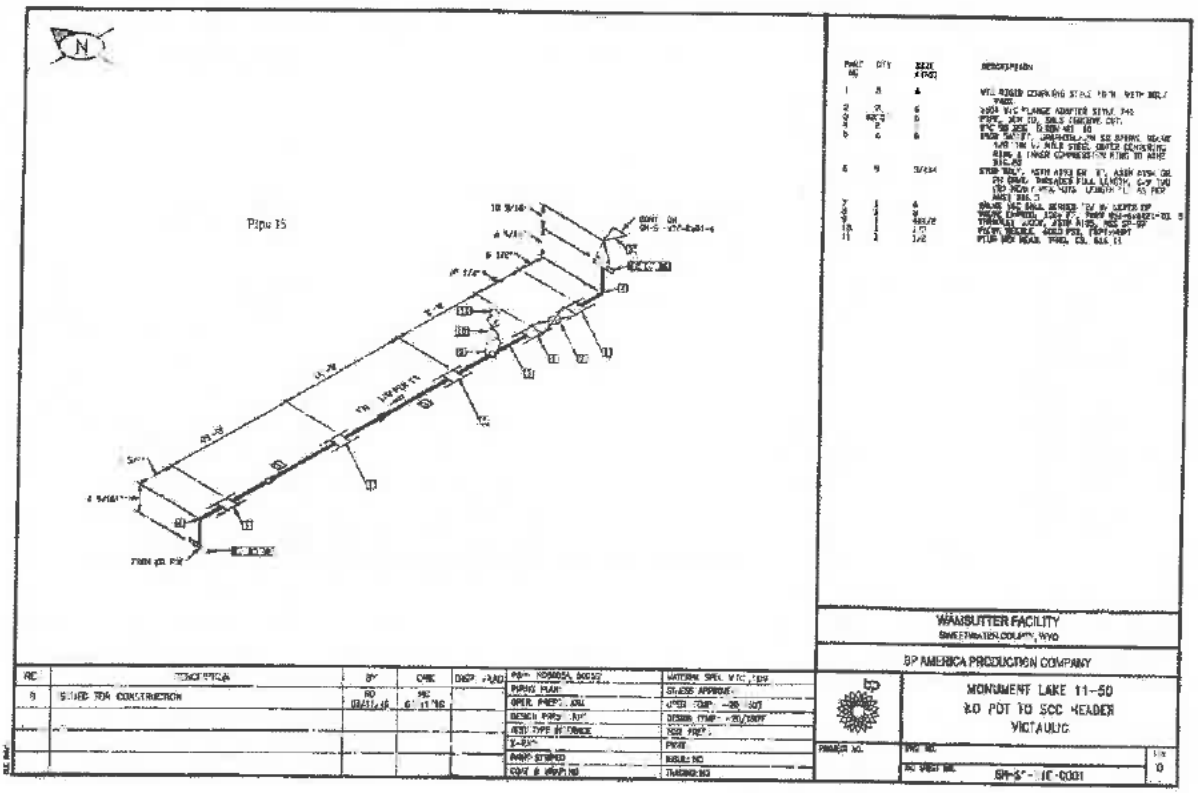
N
Pipe 15
WAMSUTTER FACILITY
BP AMERICA PRODUCTION COMPANY
MONUMENT LAKE 11-50
XO POT TO SCC HEADER
VICTAULIC

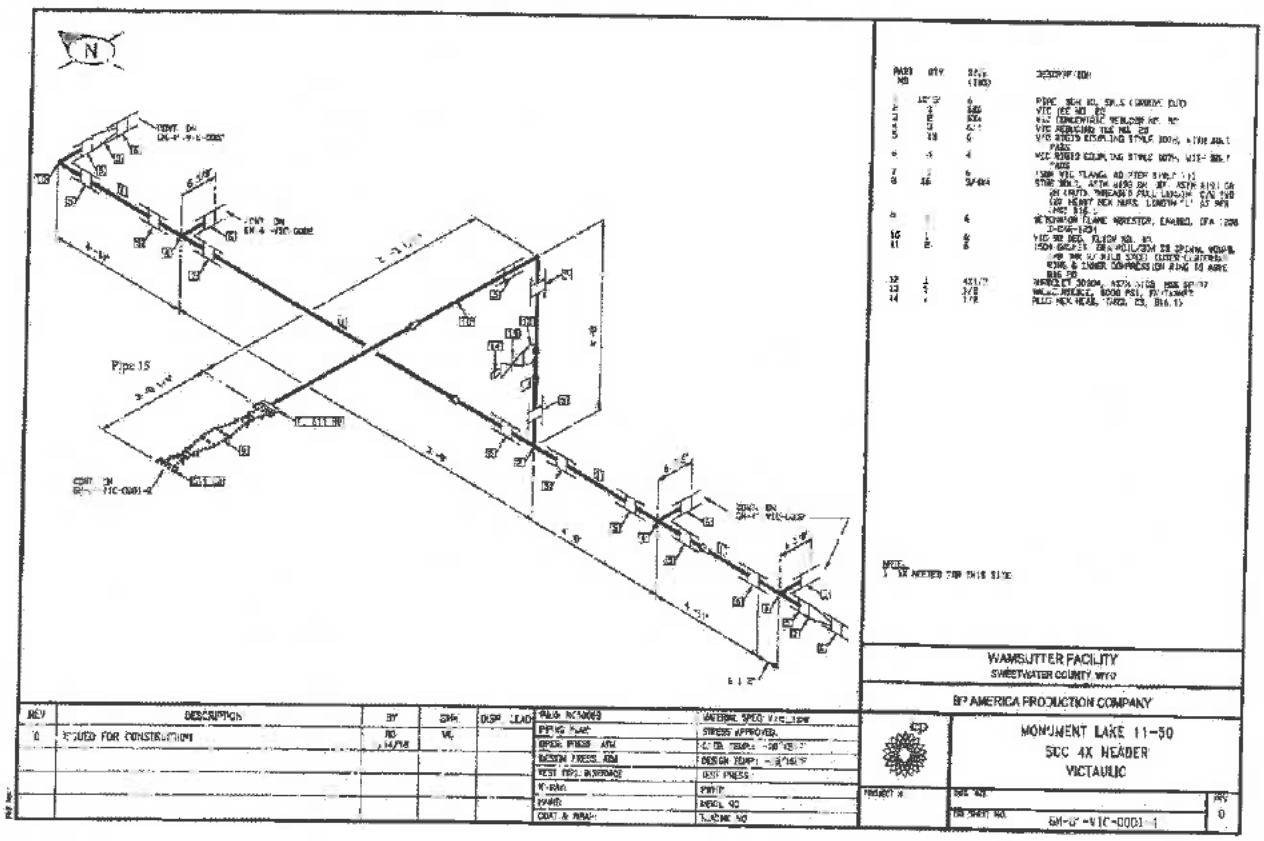
N
Pipe 15
WAMSUTTER FACILITY
SWEETWATER COUNTY WYO
BP AMERICA PRODUCTION COMPANY
MONUMENT LAKE 11-50
SCC 4X HEADER
VICTAULIC
DESCRIPTION
ISSUED FOR CONSTRUCTION

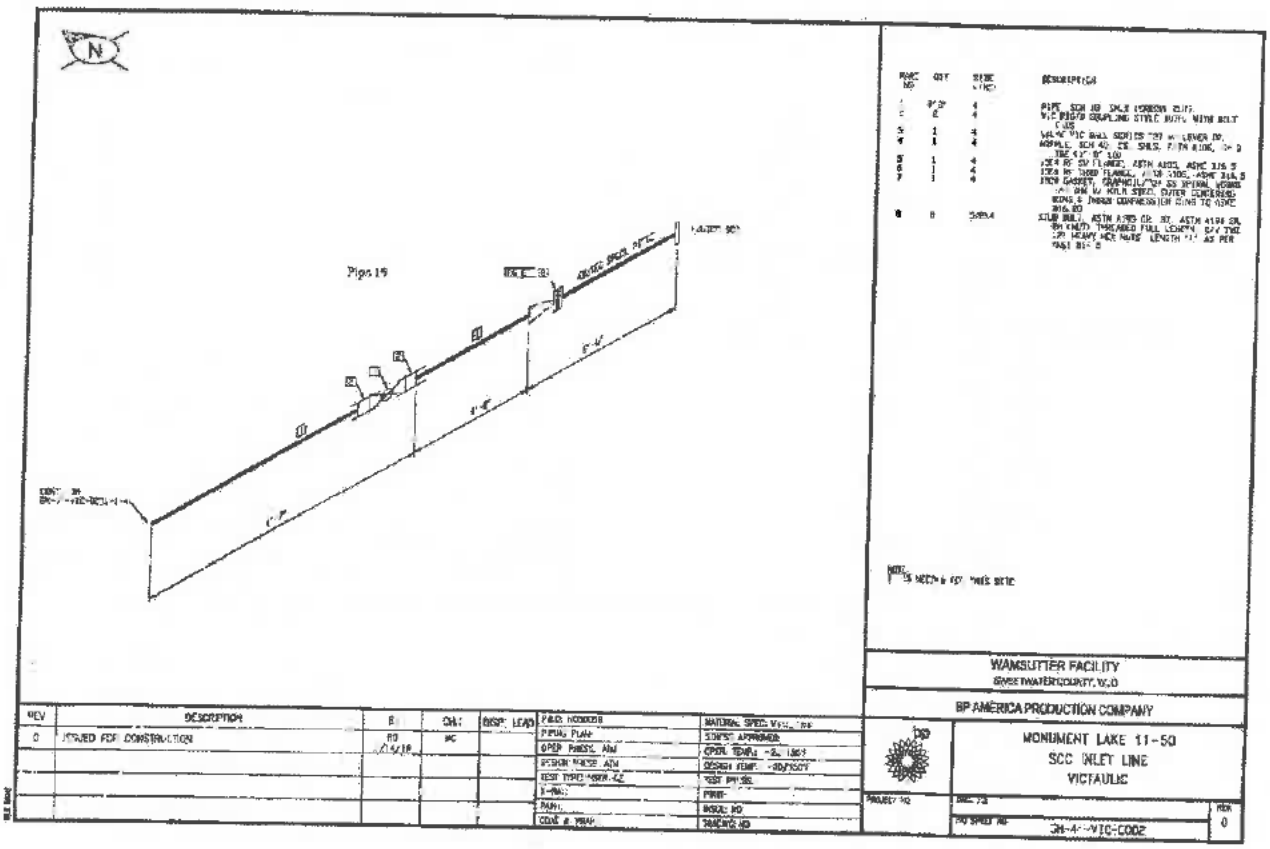
Pipe 19
WAMSUTTER FACILITY
SWEETWATER COUNTY, W.O
BP AMERICA PRODUCTION COMPANY
MONUMENT LAKE 11-50
SCC INLET LINE
VICTAULIC
REV
DESCRIPTION
ISSUED FOR CONSTRUCTION
0

GLOSSARY

SIMULATION INFORMATION

The ProMax® File, Flowsheet, and Stream are those selected on the Vent Assessment Tool Calculation tab.

FLOW BASIS

Basis – The Flow Basis indicates the method used to determine Peak Flow in the facility. "Controlling Valve" uses a valve flow coefficient (Cv) to calculate the maximum liquid flow in the facility. "User Input Vapor" is a direct user input for the vapor flow into the vent system. "User Input Liquid" is a direct user input for the liquid flow out of the simulated tank (i.e. the production rate of post-flash liquid). "Simulation" indicates that the vapor and liquid flows are taken directly from the simulation. In all cases, Peak Flow is a product of the Flow Multiplier and the vapor or liquid flowrate as determined by the Flow Basis selection. Peak Vapor Flow is also inclusive of displacement by liquid entering the tank.

Flow Multiplier – A multiplier used to determine Peak Flow, regardless of the selected Flow Basis.

VALVE PARAMETERS

Valve Name –The valve considered to be controlling flow through the facility in the ProMax file.

Valve Cv - The user-specified flow coefficient for the selected valve.

Nominal Valve Flow – Average daily flow rate through the valve. This comes directly from the ProMax file.

Instantaneous Flow - The maximum flowrate through the valve as calculated from the fluid properties, pressure differential, and flow coefficient of the valve.

Calculated Valve Flow - Peak liquid flow through the valve determined from the valve characteristics, multiplied by the Flow Multiplier.

USER INPUT FLOWS

Specified Vapor – User-specified flash gas rate out of the tanks.

Specified Liquid - User-specified liquid flow out of the simulated tanks (i.e. maximum post-flash liquid rate).

CALCULATED FLOWS

Nominal Vapor – Flash gas rate out of the tanks based on the average daily production, taken from the ProMax file.

Peak Vapor – Maximum vapor rate into the system, a product of the Flow Multiplier and vapor rate as determined by the Flow Basis selection. Peak Vapor includes volume displaced by liquids entering the tank.

Vapor Heating Value – Heating value flow of the Peak Vapor.

Nominal Liquid – Liquid Rate out of the tank battery based on the average daily production, taken from the ProMax file.

Peak Liquid – Maximum liquid flow out of the simulated tanks (i.e. maximum post-flash liquid rate). This is a product of the Flow Multiplier and liquid rate as determined by the Flow Basis selection.

VENT SYSTEM PARAMETERS

Flow Correlation - The selected flow correlation for pressure drop calculations through the vent system. Colebrook is a general application single phase correlation using an assumed pipe roughness of 0.0018". Spitzglass is a low pressure vapor correlation for pipes less than 12" in diameter with the vapor at 60°F and less than 1 psig. Oliphant is correlated for 15 to 100 psia. If Maximum is selected, then the three correlations are run and the one providing the greatest pressure drop is used.

Tank Temperature – Highest expected temperature in the tank.

Atmospheric Pressure – Atmospheric pressure at the facility.

Relief Pressure – Lowest Relief Device set-point pressure in the system. This could be a thief hatch or some other type of relief device.

Control Device DP – Total expected pressure drop for the control device, inclusive of any additional equipment such as scrubbers or detonation arrestors.

Elevation Change - Difference in elevation between the top of the tank and the inlet of the control device. A negative value indicates that the control device outlet is lower than the top of the tank while a positive value indicates that the control device outlet is higher than the top of the tank.

Collected Liquid Height - Estimate of static liquid expected in low spots of the closed vent system.

TANK RESULTS

Tank – Name of the tank corresponding to the tank name in the Vent System Configuration diagram.

Tank in Use – Indicates whether an existing tank is in use or not. "In use" is defined as having production fluids fed into the given tank and does not include tanks used for overflow purposes only.

Pressure - Calculated tank back pressure displayed in ounces per square inch and pounds per square inch gauge.

Relief Frac – Tank pressure divided by the Relief Pressure. A value greater than 100% indicates vapor is exiting the relief device on the given tank.

VENT LINE PARAMETERS

Pipe # - Pipe numbers 1-15 correspond to lines labeled 1-15 in the Vent System Configuration diagram.

Pipe ID - Actual internal diameter of the length of pipe corresponding to the Pipe # on the Vent System Configuration diagram.

Length - Actual length of the segment of pipe, regardless of orientation.

 # Fittings - Total number of fittings in the segment of pipe, regardless of type. All fittings are treated as 90 degree elbows for calculation purposes.

Flow - Calculated Peak Vapor Flow for the section of pipe.

Pressure - Calculated back pressure for the section of pipe.

VENT SYSTEM CONFIGURATION

This diagram is a representation of the tank battery and vent system configuration. A green or dark colored tank indicates a tank "in use". A light grey tank indicates a tank that is present but not in use. A tank with outlined dashed lines does not exist. Vent lines are only considered for tanks that exist.

Page 3 of 3 ProMax® 0000a Vent Assessment Tool™ 1.0.17219.0