4.7 Venturi Scrubber

The cooled gases exit the quench chamber and flow through a Verantis Environmental Solutions Group (Vernatis) Model VTV-50 standard throat venturi scrubber for removal of particulates. The vertical flow venturi scrubber is designed to operate at a pressure drop of up to 50 in. w.c.

4.8 Packed Bed Scrubber

The gases from the venturi scrubber enter the packed bed scrubber tangentially, in the lower section. The packed bed scrubber is designed to remove acid gases. The Verantis Model SPT-36-120 packed bed scrubber is a cylindrical vessel, three feet in diameter. The flue gases flow upward through a packed bed section and a demister section. The packed bed consists of a 10-foot deep bed of packing. The gases flow counter-current to the scrubber liquid flow that is introduced above the packed bed. A caustic solution is introduced into the scrubber liquid recycle loop as a reagent. The acid gases react with the caustic solution and form salts that are continuously purged in the packed bed scrubber blowdown.

4.9 Induced Draft Fan

The ID fan maintains a negative pressure in the TOU and quench/scrubber system. The ID fan is located after the packed bed scrubber. The ID fan is rated for 4,000 acfm at 45 in. w.c. The ID fan is equipped with a 75-horsepower motor and variable frequency drive for speed adjustment.

4.10 Stack

The flue gases from the ID fan are discharged through the stack to the atmosphere. The stack is 35 feet high with an internal diameter of 1.5 feet. The stack is fitted with sampling ports.

5.0 CONTINUOUS MONITORING SYSTEMS

Monitoring equipment for the TDU include systems for process control and for stack gas analysis. This equipment will enable the operators to maintain safe operation in compliance with the OPLs. This section of the plan provides an overview of the CMS associated with the TDU. These CMS are comprised of continuous process monitoring systems (CPMS) and continuous emissions monitoring systems (CEMS).

5.1 CONTINUOUS PROCESS MONITORING SYSTEMS

Various CPMS are required for the TDU to document compliance with the required OPLs. These monitors sample regulated operating parameters without interruption and evaluate the detector's response at least once every 15 seconds. The distributed control system (DCS) collects the data, calculates and records one-minute average (OMA) values for each required operating parameter, and calculates and records the appropriate rolling averages. Table 5-1 provides a description of each CPMS.

TABLE 5-1
CONTINUOUS PROCESS MONITORING SYSTEMS

MEASURED PARAMETER	INSTRUMENT DESCRIPTION
Hazardous waste feed rate	Flow meter
Rotary drum pressure	Pressure transmitter
Rotary drum temperature	Thermocouple and temperature transmitter
Thermal oxidizer unit temperature	Thermocouple and temperature transmitter
Flue gas flow rate	Flow meter
Venturi scrubber pressure drop	Differential pressure transmitter
Packed bed scrubber liquid flow rate	Flow meter
Paced bed scrubber liquid pH	pH transmitter and electrode

5.2 CONTINUOUS EMISSIONS MONITORING SYSTEMS

using only CO for CEMS requires THC during the CPT

CWM will monitor the concentrations of CO and oxygen in the stack gas. CWM will utilize a non-dispersive infrared analyzer for CO. The analyzer will be configured with two spans: a zero to 200 ppmv dry low-level span and zero to 3,000 ppmv high-level span. CWM will continuously correct these CO concentration measurements to seven percent oxygen. CWM will perform this correction with measurements of the stack gas oxygen concentration that will be collected by a paramagnetic analyzer. The analyzer will be configured with a single span of zero to 25 percent oxygen by volume on a dry basis.

The CEMS will be maintained as outlined in 40 CFR Part 266 Appendix IX, using a specified maintenance routine that includes:

- Routine maintenance;
- Daily auto calibration checks;
- Quarterly calibration error (CE) tests; and
- Annual relative accuracy test audits (RATAs).

Any problems identified by the above tests will be remedied through corrective action measures specific to the problem encountered.

5.3 Automatic Waste Feed Cutoff System

CWM will operate the TDU with a functioning system that immediately and automatically cuts off the hazardous waste feed when operating or emission limits are exceeded. Any malfunctions of the monitoring equipment or AWFCO system will also initiate an immediate and automatic cutoff of hazardous waste feed. The following OPLs will be linked to the AWFCO system:

- Maximum hazardous waste feed rate;
- Maximum treatment drum pressure;
- Minimum TOU temperature;
- Maximum flue gas flow rate;
- Minimum venturi scrubber pressure drop;
- Minimum packed bed scrubber liquid to gas ratio;
- Minimum packed bed scrubber liquid flow rate;
- Minimum packed bed scrubber liquid pH; and
- Maximum stack gas CO concentration corrected to seven percent oxygen.

maximum condenser exhaust temperature

All parameters will be linked to the AWFCO system on an HRA basis, except for treatment drum pressure, which will be linked on an instantaneous basis with a 15-second delay. An AWFCO will be initiated by the DCS. An AWFCO will stop the flow of waste to the TDU. The TOU and quench/scrubber system will continue to operate during an AWFCO.

5.4 Emergency Shutdown System

Emergency shutdown features are included to protect the equipment in the event of a malfunction. During an emergency shutdown, all waste feeds and fuel feeds are stopped. The trigger points for an emergency shutdown have been set independent of regulatory test conditions. These limits are based on equipment design and operating specifications and are considered good operating practices.

The following conditions will trigger a complete shutdown of the TDU:

- High oxygen content in rotary drum;
- High rotary drum temperature;

so they have an O2 analyzer and "interlock" that is like an AWFCO. what is the setpoint. is it permit enforceable.

- High rotary drum pressure:
- High TOU temperature;
- High TOU pressure;
- High VRU temperature; and
- Loss of compressed air supply.

is this the maximum condenser exhaust temperature? make it an OPL and AWFCO. Tie to three run average from CPT. Condenser temp strongly affects Hg emissions and hydrocarbon load on the TO. Every 10-deg C increase doubles Hg emission rate and condensible hydrocarbon input to the TO.

ED_002099_0000079-00157

6.0 COMPREHENSIVE PERFORMANCE TEST OPERATIONS

CWM intends to perform one test condition to demonstrate that the TDU operates in conformance with the applicable performance standards stated in Condition V.G.10 of the permit. This section of the plan establishes the TDU operations that will be demonstrated during the testing. In addition, the preparation of materials to be fed during the testing, the amount of waste to be used, and a schedule for the testing are presented here.

6.1 TEST CONDITION

The CPT condition is designed to demonstrate operations of the TDU at the maximum total hazardous waste feed rate, the minimum TOU temperature, and the maximum flue gas flow rate. During the condition, CWM will demonstrate compliance with the DRE standard and the D/F, mercury, SVM, LVM, HCl/Cl_2, PM, and CO emission standards. Triplicate sampling runs will be performed for the condition. All operating conditions presented in this plan are calculated values; the actual conditions observed during the test may vary slightly from these values.

The following OPLs will be established during the CPT condition:

- Maximum hazardous waste feed rate;
- Minimum TOU temperature;
- Maximum flue gas flow rate;
- Minimum venturi scrubber pressure drop;
- Minimum packed bed scrubber liquid to gas ratio;
- Minimum packed bed scrubber liquid flow rate; and
- Minimum packed bed scrubber liquid pH.

During this condition, spiking will be performed to provide the POHC feed rate necessary for the DRE demonstration and to provide elevated feed rates of mercury, SVM, LVM, and chlorine to establish OPLs. A summary of the expected operating conditions for the CPT is provided in Table 6-1.

TABLE 6-1
TEST CONDITION

OPERATING PARAMETER	UNITS	TARGETS
Hazardous waste feed rate	tph	10
Mercury feed rate	lb/hr	5.0
Chlorine feed rate	lb/hr	80
Semivolatile metals feed rate [1]	lb/hr	70
Low volatile metals feed rate [1]	lb/hr	100
Rotary drum temperature	°F	500
Thermal oxidizer unit temperature	°F	1,400
Flue gas flow rate	acfm	4,000
Venturi scrubber pressure drop	in. w.c.	35
Packed bed scrubber liquid to gas ratio	gal/Macf	10
Packed bed scrubber liquid flow rate	gpm	40
Packed bed scrubber liquid pH	---	5.0

[1] The OPL for this parameter will be established from this condition using feed rate extrapolation.

6.2 PRINCIPAL ORGANIC HAZARDOUS CONSTITUENT

POHCs must be specified that are representative of the most difficult to destroy organic compounds in the hazardous waste feedstreams. The POHC must be chosen based on the degree of difficulty of destruction of the organic constituents in the waste. USEPA's primary ranking hierarchy was used as criteria in the selection of the POHC to ensure that the POHC chosen represents the widest range of compounds expected to be present in the waste feeds.

The POHC selection approach is based on the Thermal Stability Index (TSI) developed by Dellinger *et. al.*, at the University of Dayton Research Laboratory. This approach has been included in the USEPA's handbook *Guidance on Setting Permit Conditions and Reporting Trial Burn Results*. This ranking of compounds is based on their thermal stability, with the most stable being considered the most difficult to burn. The compounds are divided into seven classes. Compounds in Class 1 are considered the most difficult to destroy.

In addition to the TSI ranking, POHC selection is influenced by other criteria as follows:

- Physical state: The POHC must be limited to those constituents that are liquids at ambient temperatures and pressures to facilitate POHC handling and quantification;
- Stability: The compound selected as POHC must be sufficiently stable and have a boiling point suitable for conventional stack sampling techniques;
- Representative: The compound selected as a POHC must be representative of the types of constituents that the systems will typically handle; and

- Availability and cost: The compound selected as a POHC must be sufficiently available so that it can be purchased or formulated at a reasonable cost.

CWM would like the ability to process any hazardous constituent that could potentially be in a waste stream. Therefore, a TSI Class 1 POHC will be used for the CPT. USEPA guidance indicates that demonstration of DRE for a compound listed in Class 1 of the TSI is a sufficient demonstration for the most difficult to destroy compounds. Chlorobenzene has been chosen as the POHC for the CPT. This POHC is ranked 19th in Class 1 of the TSI. Chlorobenzene is suitable for current stack sampling methods. SW-846 Method 0030 is typically used to sample stack gas for chlorobenzene.

The amount of POHC detected in the stack gases will be used to determine the DRE for the system. DRE is determined for the POHC from the following equation:

Main comment. VP of chlorobenzene is low, and not representative either for transport of the POHC to the TO, or HCl generation.
either needs to be injected at TO, not the TDU.
Or, be a VOC that has VP at 60F? Certainly places need for VRU temp as OPL.
For DRE, POHC s/b benzene or toluene

$$DRE = \left[1 - \frac{W_{out}}{W_{in}}\right] \times 100$$

where:

W_{out} = Mass emission rate of the POHC present in exhaust emissions prior to release to the atmosphere; and

W_{in} = Mass feed rate of the same POHC in the waste feed.

The POHC must be supplied to the unit in sufficient quantity to be detectable in the stack gas. Each stack sampling method has a minimum detection limit. Using the most conservative approach for the test, any compound which is found to be present in the stack gas at quantities below the method minimum detection limit or that is undetected in the stack gases is assumed to be present at the minimum detection limit. Therefore, it is very important to ensure that there is adequate quantity of POHC in the system feed to demonstrate the target 99.99 percent DRE.

The required POHC feed rate is determined by back-calculating from the stack sampling method detection limit and the target DRE (99.99 percent) using the following equation, which is derived from the DRE equation above:

$$W_{in} = W_{out} \times \left[\frac{100}{100 - DRE}\right]$$

Table 6-2 provides the POHC quantity that will be required for the CPT.

TABLE 6-2
PRINCIPAL ORGANIC HAZARDOUS CONSTITUENT QUANTITY

PARAMETER	UNITS	VALUE
Method detection limit	ng/dscf	70.8
Estimated stack flow rate	dscfm	1,300
Target destruction and removal efficiency	%	99.99
Emission rate required for detection	lb/hr	1.22E-05
Required POHC feed rate	lb/hr	0.12
Target POHC feed rate	lb/hr	10

The target POHC feed rate in Table 6-2 was chosen to provide an adequate safety factor above the calculated minimum required POHC feed rate and to provide a reasonable pumping rate for the spiking equipment.

6.3 METALS FEED RATE EXTRAPOLATION

CWM intends to utilize feed rate extrapolation to establish the SVM and LVM feed rate OPLs. The SVM and LVM feed rates and associated emission rates will be used to extrapolate to a higher allowable feed rate limits. The following equation will be used for the extrapolation:

$$FR_{LIMIT} = FR_{TB} \times \frac{ES}{EC_{TB}}$$

where:

FR_{LIMIT} = Maximum allowable feed rate limit of SVM or LVM (lb/hr)

FR_{TB} = Feed rate of SVM or LVM demonstrated during the CPT (lb/hr)

ES = Emission standard for SVM or LVM (µg/dscm corrected to seven percent oxygen)

EC_{TB} = Emission concentration of SVM or LVM demonstrated during the CPT (µg/dscm corrected to seven percent oxygen)

As discussed in *Final Technical Support Document for HWC MACT Standards, Volume IV: Compliance With the HWC MACT Standards*, linear upward extrapolation can be conservatively used to allow for higher metals feedrate limits while continuing to ensure that the facility is within the emissions standards. This is because metals system removal efficiencies tend to stay the same or increase as the feedrate increases. This applies to all metals types and volatility groupings. Therefore, an extrapolated metals feed rate will most likely produce an actual emission rate that is lower than the predicted emission rate. A linear extrapolation should ensure that the emission standards will not be exceeded at the higher feed rates.

max extrapolation of 3x or 80% of emission limit

ED_002099_0000079-00161

The target feed rates were chosen to ensure that the CPT condition would provide a reasonable representation of the system removal efficiency for SVM and LVM and to minimize the effects of method detection limits on the extrapolation calculations. Table 6-3 presents the target SVM and LVM feed rates and the expected extrapolated SVM and LVM OPL.

TABLE 6-3
FEED RATE EXTRAPOLATION

METAL GROUP	UNITS	TARGET FEED RATE	EXPECTED EXTRAPOLATED LIMIT
Semivolatile metals	lb/hr	70	200
Low volatile metals	lb/hr	100	300

6.4 WASTE SPIKING

To achieve the desired operating conditions for the CPT, CWM will be required to spike the waste stream with known quantities of POHC, metals, and chlorine. The following spiking materials will be used during the CPT:

- Chlorobenzene will be spiked to provide adequate POHC feed rate for the DRE determination (the chlorobenzene will also contribute to the chlorine feed rate);
- A mercury oxide powder will be spiked to maximize the feed rate of mercury to establish the mercury feed rate OPL;
- Potassium chloride will be spiked to maximize the feed rate of chlorine to establish the chlorine feed rate OPL;
- A lead oxide powder will be spiked to increase the feed rate of SVM to allow for accurate extrapolation of the SVM feed rate OPL; and
- A chromium oxide powder will be spiked to increase the feed rate of LVM to allow for accurate extrapolation of the LVM feed rate OPL.

A spiking contractor will operate the spiking system for chlorobenzene during the stack testing. The chlorobenzene will be supplied by the spiking contractor. The solid spiking materials will be fed to the system by hand by CWM operators. These materials will be prepackaged prior to the CPT. Table 6-4 summarizes the waste spiking planned for the CPT.

TABLE 6-4
WASTE SPIKING

SPIKING MATERIAL	SPIKING ELEMENT	ELEMENTAL SPIKING RATE (LB/HR)	EXPECTED ELEMENTAL CONCENTRATION (%WT)	TOTAL SPIKING RATE (LB/HR)
Chlorobenzene	POHC	10	100	10
	Chlorine	3.2	31.6	
Mercury oxide	Mercury	5	92.6	5.4
Potassium chloride	Chlorine	77	47.6	162
Lead oxide	SVM	70	92.8	75.4
Chromium oxide	LVM	100	68.4	146

The chlorobenzene will be pumped directly onto the hazardous waste feed conveyor, downstream of the feed rate measurement location. The spiking system will consist of the following major equipment:

- Metering pump;
- Mass flow meter; and
- Process control and data acquisition computer.

The spiking material is connected to the suction of the pump from the supply drum with flexible tubing. The pump transfers the fluid through the mass flow meter and flexible tubing to the waste feed conveyor. The mass flow meter sends a signal to the process controller that will adjust the pump speed according to the set point. The data acquisition software will record the data continuously, providing a complete record of spiking rates. A schematic of a spiking system is provided in Figure 6-1.

HgO not appropriate. Elemental Hg is what is in the OBHW. VP orders of magnitude higher. Spike should be Hg elemental.

Chlorine spike should be VOC. Not salt. Salt has no VP, and does not transport to TO. Not valid demo for HCl. Chlorinated VOCs should be selected for chlorine spike. Inorganic chlorine cannot be included in the OPL for "chlorine" in the feed

FIGURE 6-1
SPIKING SYSTEM SCHEMATIC

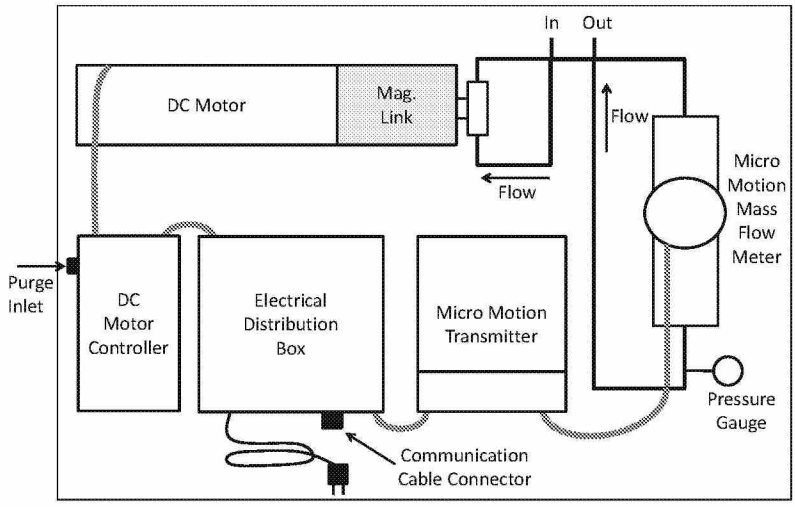

ED_002099_0000079-00163

The metals and chlorine spiking materials will be prepackaged prior to the CPT and will be manually placed on the conveyor during the test runs. The following spiking procedures will be used:

- For mercury oxide, a 1.1-pound package will be fed every 12 minutes;
- For potassium chloride, a 5.4-pound package will be fed every two minutes;
- For lead oxide, a 2.5-pound package will be fed every two minutes; and
- For chromium oxide, a 4.9-pound package will be fed every two minutes.

6.5 Test Materials and Quantities

Table 6-5 summarizes the quantity of materials required to conduct the testing. Triplicate runs will be carried out for the test condition. Test runs will require approximately 3.5 hours. An additional one hour of run time will be required for each day of testing in order to establish the steady state conditions and begin waste spiking before the start of the test runs, and one hour will be required between consecutive test runs. Therefore, for the purpose of calculating test quantities, a total of 13.5 hours has been used. We have also added approximately 40 percent to each total to allow for unforeseen delays.

Table 6-5
Test Material Quantities

Material	Units	Quantity
Waste	tons	200
Chlorobenzene	pounds	200
Mercury oxide	pounds	100
Potassium chloride	pounds	3,100
Lead oxide	pounds	2,800
Chromium oxide	pounds	1,400

6.6 Test Schedule

The sampling effort is estimated to require three days to complete. During this period, sampling equipment and instruments will be prepared and calibrated, supplies will be brought onsite, and sampling locations will be prepared. Although the onsite activities will dictate the actual timing, a preliminary schedule is presented in Table 6-6.

CWM has allowed one hour of run time in order to establish the steady-state conditions before the start of the test runs. Steady-state is defined as a condition when the TOU temperature and CO emissions remain stable with minimal fluctuation. If there is significant fluctuation at the end of the hour, the test will not begin until steady-state conditions are achieved. The waste spiking systems will be started at the beginning of the steady-state period. The waste spiking will be operated for at least one hour prior to performing any stack sampling.

TABLE 6-6
TRIAL BURN SCHEDULE

DAY	START	STOP	ACTIVITY
1	- - -	- - -	Set-up of sampling equipment
2	07:30	08:00	Pre-test meeting
	08:00	09:00	Cyclonic flow check and preliminary velocity check, setup of sampling equipment for Run 1
	09:00	12:30	Run 1
	12:30	13:30	Setup of sampling equipment for Run 2
	13:30	17:00	Run 2
3	08:00	09:00	Setup of sampling equipment for Run 3
	09:00	12:30	Run 3
	12:30	- - -	Break down sampling equipment

ED_002099_0000079-00165

7.0 SAMPLING AND ANALYSIS

Sampling and analysis performed during the test conditions described in Section 6 will demonstrate the performance of the TDU with respect to the performance standards of Condition V.G.10 of the permit. The test condition will consist of three replicate test runs. For each run, samples will be collected using procedures described in the QAPP found in Appendix A. Since most of the proposed methods are standard reference methods, only brief descriptions are presented. Sample holding times will be consistent with the analytical requirements for the methods used.

7.1 WASTE SAMPLING AND ANALYSIS

Waste samples will be collected during each run of the CPT. The waste sampling location will be clearly labeled during the CPT. Table 7-1 summarizes the waste sampling and analysis procedures.

TABLE 7-1
WASTE SAMPLING AND ANALYSIS

SAMPLING METHOD	SAMPLING AMOUNT/ FREQUENCY	ANALYTICAL PARAMETER	ANALYTICAL METHOD [1,2]
Scoop sampling	Approximately 250 mL at 30-minute intervals	Mercury	SW-846 Method 7470A or 7471A
		Arsenic, beryllium, cadmium, chromium, and lead	SW-846 Method 6010B
		Chlorine	SW-846 Methods 5050 and 9056
		Chlorobenzene	SW-846 Method 8260B

1 SW-846 refers to *Test Methods for Evaluating Solid Waste, Third Edition*.
2 All methods will be performed in accordance with the laboratory's Louisiana Environmental Laboratory Accreditation Program (LELAP) approved standard operating procedures (SOPs).

The waste samples will be composited for each run into a one-gallon jar. At the conclusion of each run, the jar will be thoroughly mixed, and the sample will be divided into three 500-milliliter (mL) amber glass jars. The samples will be isolated from sources of contamination during the sampling and compositing efforts. One sample will be sent to the laboratory for analysis, one sample will be sent to the laboratory as a backup, and one sample will be archived onsite. The waste samples will be analyzed for chlorine and metals contents to develop the required OPLs and for chlorobenzene content to determine the DRE.

7.2 NATURAL GAS SAMPLING AND ANALYSIS

The natural gas will not be sampled and analyzed during the CPT. Analysis of this feedstream is not required for the compliance demonstrations.

7.3 Spiking Materials Sampling and Analysis

The spiking materials will not be sampled and analyzed during the CPT. These will be pure materials purchased for testing. The suppliers will certify the spiking materials' compositions.

7.4 Stack Gas Sampling and Analysis

During the CPT, the stack gas will be sampled for chlorobenzene, D/F, mercury, SVM, LVM, HCl/Cl_2, and PM emissions, and CO emissions will be monitored. The following sampling methods will be used:

- USEPA Methods 1, 2, 3A, and 4 for determination of stack sampling traverse points, gas flow rate, composition, and moisture content;
- SW-846 Method 0030 for measurement of chlorobenzene emissions;
- SW-846 Method 0023A for measurement of D/F emissions;
- USEPA Method 29 for measurement of mercury, SVM, and LVM emissions;
- USEPA Methods 5 and 26A combined for measurement of HCl/Cl_2 and PM emissions; and
- The facility's CEMS to monitor the concentrations of CO and oxygen in the stack gas.

Table 7-2 summarizes the stack gas samples to be taken, the parameters to be measured, and the duration of measurement.

Table 7-2
Stack Gas Sampling and Analysis

Sampling Method [1,2]	Sampling Duration	Analytical Parameter	Analytical Method [1,2]
USEPA Methods 1, 2, 3A, and 4	Not applicable	Traverse points, stack flow, composition, and moisture	Not applicable
SW-846 Method 0030	4 tube sets, 20 minutes per tube set	Chlorobenzene	SW-846 Method 8260B
SW-846 Method 0023A	180 minutes (minimum)	Dioxins and furans	SW-846 Methods 0023A and 8290A
USEPA Methods 5 and 26A	120 minutes (minimum)	Particulate matter, hydrogen chloride, and chlorine	USEPA Method 5
USEPA Method 29	120 minutes (minimum)	Arsenic, beryllium, cadmium, chromium, lead, and mercury	SW-846 Methods 6010C and 7471A
Facility CEMS	Continuous	Carbon monoxide	Facility CEMS
Facility CEMS	Continuous	Oxygen	Facility CEMS

1 SW-846 refers to *Test Methods for Evaluating Solid Waste, Third Edition*. USEPA Method refers to New Source Performance Standards, Test Methods and Procedures, Appendix A, 40 CFR Part 60.

2 All methods will be performed in accordance with the stack sampler's and laboratory's Louisiana Environmental Laboratory Accreditation Program (LELAP) approved standard operating procedures (SOPs).

THC by CEMS. RCRA permit requires CPT be compliant with 1207, demonstrating compliance with 1219. For the DRE demo @ >99.99% 1219.(b)(5) requires simultaneous CO and THC in the CPT, with THC being below 10 ppm and CO being below 100 ppm.

add section requiring desorber solids sampling for LDR compliance.

ED_002099_0000079-00167

Appendix A:
QUALITY ASSURANCE PROJECT PLAN

ED_002099_0000079-00168

WASTE MANAGEMENT

CHEMICAL WASTE MANAGEMENT, INC.

LAKE CHARLES FACILITY

HAZARDOUS WASTE OPERATING PERMIT EPA ID NO. LAD 000 777 201 AGENCY INTEREST NO. 742

QUALITY ASSURANCE PROJECT PLAN FOR THERMAL DESORPTION UNIT

NOVEMBER 2017

PREPARED BY:

pivotal engineering

Coterie ENVIRONMENTAL

PROJECT TEAM SIGNATURE PAGE

Facility: Chemical Waste Management, Inc., Lake Charles, Louisiana
Unit ID: Thermal Desorption Unit
Test Title: Comprehensive Performance Test

This quality assurance project plan (QAPP) has been developed for the comprehensive performance test (CPT) to be conducted for Chemical Waste Management, Inc., Thermal Desorption Unit. This QAPP has been distributed to and read by the signatories. By signing, the signatories agree to the appropriate information pertaining to their project responsibilities provided in the QAPP.

Performance Test Manager Ben Dabadie Chemical Waste Management, Inc.	Date
Project Coordinator S. Heather McHale, P.E. Coterie Environmental LLC	Date
Stack Testing Director Name: _____ Company: _____	Date
Waste Spiking Director Name: _____ Company: _____	Date
Quality Assurance Officer Meghan Skemp Coterie Environmental LLC	Date

Notes: The individuals listed above: 1) have received, read, and agreed to the appropriate information pertaining to their project responsibilities listed and provided in this QAPP and 2) agree that no testing methods have been modified.

These pages will be signed after approval of the plans.

LABORATORY SIGNATURE PAGE

Facility: Chemical Waste Management, Inc., Lake Charles, Louisiana
Unit ID: Thermal Desorption Unit
Test Title: Comprehensive Performance Test

This quality assurance project plan (QAPP) has been developed for the comprehensive performance test (CPT) to be conducted for Chemical Waste Management, Inc., Thermal Desorption Unit. This QAPP has been distributed to and read by the signatories. By signing, the signatories agree to the appropriate information pertaining to their project responsibilities provided in the QAPP. Laboratory representatives have reviewed the methods specified in the QAPP and certify that all analytical methods will be performed in accordance with their Louisiana Environmental Laboratory Accreditation Program (LELAP) approved standard operating procedures (SOPs), and any deviations will be noted.

_____ _____

Laboratory Project Manager Date
Name: _____
Company: _____

Notes: The individuals listed above: 1) have received, read, and agreed to the appropriate information pertaining to their project responsibilities listed and provided in this QAPP and 2) agree that no testing methods have been modified.

These pages will be signed after approval of the plans.

TABLE OF CONTENTS

1.0 Introduction 1-1
- 1.1 Facility Overview 1-1
- 1.2 Unit Overview 1-2
- 1.3 Comprehensive Performance Test Overview 1-2
- 1.4 Quality Assurance Project Plan Organization 1-2
- 1.5 Document Revision History 1-3

2.0 Organization of Personnel, Responsibilities, and Qualifications 2-1
- 2.1 Performance Test Manager 2-2
- 2.2 Project Coordinator 2-2
- 2.3 Stack Testing Director 2-2
- 2.4 Field Team 2-2
- 2.5 Waste Spiking Director 2-3
- 2.6 Laboratories 2-3
- 2.7 Quality Assurance Officer 2-3

3.0 Sampling Procedures 3-1
- 3.1 Waste Sampling 3-1
- 3.2 Natural Gas Sampling 3-1
- 3.3 Spiking Materials Sampling 3-1
- 3.4 Stack Gas Sampling 3-1
  - 3.4.1 Sampling Point Determination – USEPA Method 1 3-2
  - 3.4.2 Flue Gas Velocity and Volumetric Flow Rate – USEPA Method 2 3-2
  - 3.4.3 Flue Gas Composition and Molecular Weight – USEPA Method 3A 3-3
  - 3.4.4 Flue Gas Moisture Content – USEPA Method 4 3-3
  - 3.4.5 Particulate Matter, Hydrogen Chloride, and Chlorine – USEPA Methods 5 and 26A 3-3
  - 3.4.6 Arsenic, Beryllium, Cadmium, Chromium, Lead, and Mercury – USEPA Method 29 3-4
  - 3.4.7 Dioxins and Furans – SW-846 Method 0023A 3-4
  - 3.4.8 Chlorobenzene – SW-846 Method 0030 3-5
  - 3.4.9 Carbon Monoxide and Oxygen 3-6
- 3.5 Sampling Quality Control Procedures 3-6

4.0 Sample Handling and Documentation 4-1
- 4.1 Field Sampling Operations 4-1
- 4.2 Field Laboratory Operations 4-2

5.0 Analytical Procedures 5-1

6.0 Data Quality Objectives 6-1
- 6.1 Quality Control Parameters 6-1
  - 6.1.1 Precision 6-4

ED_002099_0000079-00172

6.1.2 Accuracy 6-4
6.1.3 Representativeness 6-5
6.1.4 Comparability 6-5
6.1.5 Completeness 6-5
6.2 Evaluation of Contamination Effects 6-6
6.3 Performance Audits 6-7
6.4 Corrective Action 6-8
6.4.1 Equipment Failure 6-8
6.4.2 Analytical Deviations 6-8
6.4.3 Contamination 6-8
6.4.4 Procedural Deviations 6-8
7.0 Calibration Procedures and Preventative Maintenance 7-1
7.1 Sampling Equipment 7-1
7.1.1 Pitot Tubes 7-3
7.1.2 Differential Pressure Gauges 7-3
7.1.3 Digital Temperature Indicator 7-3
7.1.4 Dry Gas Meter and Orifice 7-3
7.1.5 Barometer 7-3
7.1.6 Nozzle 7-3
7.1.7 Continuous Emissions Monitors 7-3
7.2 Analytical Equipment 7-4
7.3 Preventative Maintenance 7-6
7.3.1 Sampling Equipment 7-6
7.3.2 Analytical Equipment 7-7
8.0 Data Reduction, Validation and Reporting 8-1
8.1 Data Reduction 8-1
8.2 Data Validation 8-1
8.2.1 Review of Field Documentation 8-2
8.2.2 Laboratory Review of Data 8-2
8.2.3 Evaluation of Data Quality 8-2
8.3 Data Reporting 8-2
8.3.1 Management of Non-Detects 8-3
8.3.2 Rounding and Significant Figures 8-3
9.0 Quality Assurance Reports 9-1
10.0 References 10-1

LIST OF TABLES

Table 1-1 Document Revision History 1-3
Table 3-1 Waste Sampling 3-1
Table 3-2 Stack Gas Sampling 3-2

ED_002099_0000079-00173

Table 4-1 Sample Custody Documentation Requirements 4-1
Table 5-1 Sample Preparation and Analysis Procedures for Waste Samples 5-1
Table 5-2 Sample Preparation and Analysis Procedures for Stack Gas Samples 5-2
Table 6-1 Quality Control Objectives for Waste Samples 6-2
Table 6-2 Quality Control Objectives for Stack Gas Samples 6-3
Table 6-3 Blank Analysis Objectives for Stack Gas Samples 6-7
Table 7-1 Sampling Equipment Calibration Requirements 7-2
Table 7-2 Summary of Analytical Equipment Calibration and Quality Control Checks 7-4
Table 7-3 Maintenance Activities For Field Sampling Equipment 7-7
Table 7-4 Maintenance Activities for Analytical Equipment 7-8

LIST OF FIGURES

Figure 2-1 Project Organization 2-4
Figure 3-1 USEPA Methods 5 and 26A Sampling Train 3-7
Figure 3-2 USEPA Method 29 Sampling Train 3-8
Figure 3-3 SW-846 Method 0023A Sampling Train 3-9
Figure 3-4 SW-846 Method 0030 Sampling Train 3-10

LIST OF ATTACHMENTS

Attachment A: Project Team Contact Information
Attachment B: Project Team Resumes

ED_002099_0000079-00174

1.0 INTRODUCTION

This quality assurance project plan (QAPP) is being submitted by Chemical Waste Management, Inc., (CWM) for the Thermal Desorption Unit (TDU) to be operated at the Lake Charles Facility. The TDU is subject to the Resource Conservation and Recovery Act (RCRA) standards codified in Title 40 Code of Federal Regulations (CFR) Part 264 Subpart X and Louisiana Administrative Code (LAC) Title 33 Part V Chapter 32. The applicable operating requirements for the TDU are specified in Section V.G of Hazardous Waste Operating Permit No. LAD000777201-0P-RN-MO-I. This QAPP describes the quality assurance (QA) and quality control (QC) program associated with the comprehensive performance test (CPT) to be conducted for the TDU.

1.1 FACILITY OVERVIEW

The CWM Lake Charles Facility is a commercial hazardous waste treatment, storage, and disposal facility located on a 390-acre tract near Carlyss, Louisiana. John Brannon Road divides the facility into two parts: 270 acres to the west and 120 acres to the east. Incoming waste is currently treated as required and then disposed in Hazardous Waste Landfill Cell 8, located on the west side of John Brannon Road, adjacent to the other operational areas of the facility. CWM has added two new technologies to the current operations at the Lake Charles Facility. These new technologies offer CWM opportunities to treat waste and recover oil for resale. The two new systems consist of Oil Recovery Units and the TDU.

The street address of the CWM Lake Charles Facility is:

Chemical Waste Management, Inc.
Lake Charles Facility
7170 John Brannon Road
Carlyss, Calcasieu Parish, Louisiana 70665

All correspondence should be directed to the following facility contact:

Benjamin Dabadie
Environmental Manager
Chemical Waste Management, Inc.
Lake Charles Facility
7170 John Brannon Road
Sulphur, Louisiana 70665
Phone: 337-583-3676
Email: bdabadie@wm.com

1.2 Unit Overview

The TDU is designed to remediate organic hydrocarbon waste streams by thermally volatilizing their hydrocarbon constituents such that they are separated from the solid fraction, processed, and captured as a recovered organic material. The TDU consists of a solids feed system, an indirectly heated rotary drum, a Vapor Recovery Unit (VRU), and a Thermal Oxidizer Unit (TOU). Gases exit the TOU and flow through a water quench, a venturi scrubber, and a packed bed scrubber. An induced draft (ID) fan downstream of the packed bed scrubber pulls the gases through the TOU and quench/scrubber system and pushes them out the stack.

1.3 Comprehensive Performance Test Overview

The CPT is designed to demonstrate compliance with the emission standards being included as applicable requirements in the permit. The CPT will also establish the operating parameter limits (OPLs) required by Condition V.G.11 of the permit. One test condition will be performed for the TDU during the CPT. The CPT condition will be performed to demonstrate compliance with the destruction and removal efficiency (DRE) standard and the dioxins and furans (D/F), mercury, semivolatile metals (SVM), low volatile metals (LVM), hydrogen chloride and chlorine (HCl/Cl_2), particulate matter (PM), and carbon monoxide (CO) emission standards while operating the TDU at the maximum total hazardous waste feed rate, the minimum TOU temperature, and the maximum flue gas flow rate. The venturi scrubber will be operated at the minimum pressure drop, and the packed bed scrubber will be operated at the minimum liquid to gas ratio, the minimum liquid flow rate, and the minimum liquid pH.

This CPT is being coordinated by Coterie Environmental LLC (Coterie) under the direction of CWM personnel. Coterie is responsible for the test protocol development and implementation and will oversee the TDU's operations and the stack sampling activities during the test program. A stack sampling contractor will perform all of the stack sampling for the test program. This contractor will be responsible for all emissions samples collected during the test program, with oversight by Coterie. A spiking contractor will provide waste spiking services during the test program. The emissions samples will be sent to qualified laboratories for analysis.

1.4 Quality Assurance Project Plan Organization

This QAPP has been prepared following the United States Environmental Protection Agency (USEPA) document entitled *Preparation Aids for the Development of Category I Quality Assurance Project Plan*. The QAPP will serve as an essential guidance by which the CPT will be performed. The QAPP defines all aspects of QA/QC procedures and establishes sampling and analytical quality indicators that will demonstrate achievement of the test objectives. Additionally, this QAPP defines precision and accuracy criteria for all of the required measurements that will be used to demonstrate that all associated test data is of sufficient quality to demonstrate compliance. The remaining sections of the QAPP provide the following information:

- Section 2 presents information on the CPT project team;

- Section 3 describes the CPT sampling procedures;
- Section 4 presents sample handling and documentation information;
- Section 5 discusses the CPT analytical procedures;
- Section 6 presents the CPT data quality objectives;
- Section 7 discusses calibration procedures and preventative maintenance;
- Section 8 discusses data reduction, validation, and reporting procedures;
- Section 9 discusses QA reports;
- Section 10 includes a list of reference documents for the QAPP;
- Attachment A includes the project team contact information; and
- Attachment B includes resumes for key project team members.

1.5 Document Revision History

The original version of this plan was submitted in November 2017. The nature and date of any future revisions will be summarized in Table 1-1.

Table 1-1
Document Revision History

Revision	Date	Description of Changes
0	November 2017	Original submittal

ED_002099_0000079-00177

2.0 ORGANIZATION OF PERSONNEL, RESPONSIBILITIES, AND QUALIFICATIONS

CWM and their contractors will have specific and unique duties in the implementation of the CPT project. The project team duties are summarized below. A project organization flow chart is provided in Figure 2-1. Any key personnel that become unavailable will be replaced by equally qualified personnel prior to test mobilization. This QAPP will be distributed to key project personnel for review prior to the CPT. These personnel will sign the appropriate QAPP signature page.

Key personnel contact information is summarized in Attachment A. Resumes for key project team members are provided in Attachment B.

CWM, through the Performance Test Manager, will:

- Procure and prepare waste feeds;
- Operate the TDU at the designated conditions;
- Collect waste samples; and
- Report all feed rates and TDU process parameters.

Coterie, through the Project Coordinator, will:

- Serve as liaison with regulatory agencies and the CPT team;
- Provide oversight for the project; and
- Prepare the final report.

The stack sampling contractor, through the Stack Testing Director and stack sampling field team, will:

- Perform stack gas sampling;
- Implement the QA program for the emissions testing and sample analysis;
- Provide custody of all samples generated by the test efforts;
- Transport the samples to the laboratories for analysis; and
- Prepare the stack and process sampling report and supporting documentation.

The waste spiking contractor, through the Waste Spiking Director and spiking crew, will:

- Perform spiking of chlorobenzene;
- Prepare pre-weighed packets of mercury oxide, potassium chloride, lead oxide, and chromium oxide; and
- Provide a spiking report.

The laboratories will:

- Perform sample analyses;
- Perform method and QAPP specified QA/QC;
- Provide a detailed case narrative; and
- Generate analytical data reports.

The Quality Assurance Officer will:

- Oversee sampling and analysis procedures;
- Provide input and document the observation of testing and corrective actions; and
- Review all analytical results.

2.1 Performance Test Manager

Ben Dabadie will serve as the CWM Performance Test Manager. Mr. Dabadie will be responsible for directing CWM personnel in the operations of the TDU during the testing. He will also ensure that all necessary unit operating data is collected during the test.

2.2 Project Coordinator

Heather McHale of Coterie will provide coordination and oversight during the test program. Ms. McHale will ensure that all test team members communicate throughout the test program and that the objectives of the CPT plan are met (*i.e.,* test operating conditions, field sampling objectives).

2.3 Stack Testing Director

A qualified representative from the stack sampling contractor will serve as the Stack Testing Director for the CPT. This individual will be responsible for technical supervision of the project, data interpretation, and overall report preparation and will coordinate with all laboratories and outside service providers. A project manager, who reports to this person, will oversee the field crew during the testing, will be responsible for all aspects of sample collection, and will report any deviations immediately to the Performance Test Manager and Project Coordinator. The Stack Testing Director may or may not be onsite during the CPT.

2.4 Field Team

The field team will be made up of CWM and contractor personnel. CWM operators will be responsible for collecting all waste samples. The stack sampling field team will collect all of the stack gas samples and will take custody of the waste samples from the operators at the conclusion of the testing.

2.5 Waste Spiking Director

A qualified representative from the waste spiking contractor will serve the Waste Spiking Director and will provide direction of the spiking efforts. This individual will ensure that the spiking crew is staffed with experienced technicians. He may or may not be onsite during the CPT.

2.6 Laboratories

The laboratories will be specified by the designated stack sampling contractor and will be approved by CWM. The selected laboratories will be experienced in conducting analyses per the methods described in this QAPP. Prior to test execution, the QAPP will be submitted to the various laboratories for their review and understanding of their project responsibilities. Each laboratory representative will sign the appropriate QAPP signature page. The laboratory representative will be responsible for ensuring that the laboratory follows all analytical methods specified in the QAPP in accordance with their Louisiana Environmental Laboratory Accreditation Program (LELAP) approved standard operating procedure (SOPs), that a detailed case narrative is prepared that addresses all analytical deviations, and that a complete laboratory report is provided.

2.7 Quality Assurance Officer

The Quality Assurance Officer will have overall QA authority for all aspects of the test program. The Quality Assurance Officer is organizationally independent of the test program technical staff and is not directly responsible for making any measurements during the test. Meghan Skemp of Coterie has been selected as the Quality Assurance Officer. In this role, Ms. Skemp will ensure that all field and lab procedures are performed in compliance with QAPP objectives and will perform the entire scope of duties outlined for Quality Assurance Officers by the Louisiana Department of Environmental Quality (LDEQ) on their website.

Some of the specific duties that the Quality Assurance Officer will perform include:

- Providing additional oversight for sampling activities during the testing;
- Providing oversight for sample handling, shipment, and laboratory receipt after the samples have been taken;
- Auditing onsite sampling procedures, sampling equipment, and QA/QC activities;
- Coordinating with the Performance Test Manager, the Project Coordinator, and agency personnel onsite to resolve any conflicts during the testing;
- Resolving any potential conflicts with laboratories conducting the analyses and communicating all changes to the field team prior to the actual stack testing;
- Providing laboratory communications oversight prior to, during, and after the sampling activities take place;
- Providing documentation of all laboratory communications for the duration of the project to ensure that potential QA/QC issues encountered during sample collection, analysis, and data validation are accounted for in the assessment of data usability;

- Providing final data validation through a review of all laboratory reports for data quality issues, including review of case narratives for acceptability; and
- Providing a QA summary report that includes a listing of all deviations from the CPT plan or QAPP with corrective actions and the effect on data quality.

FIGURE 2-1
PROJECT ORGANIZATION

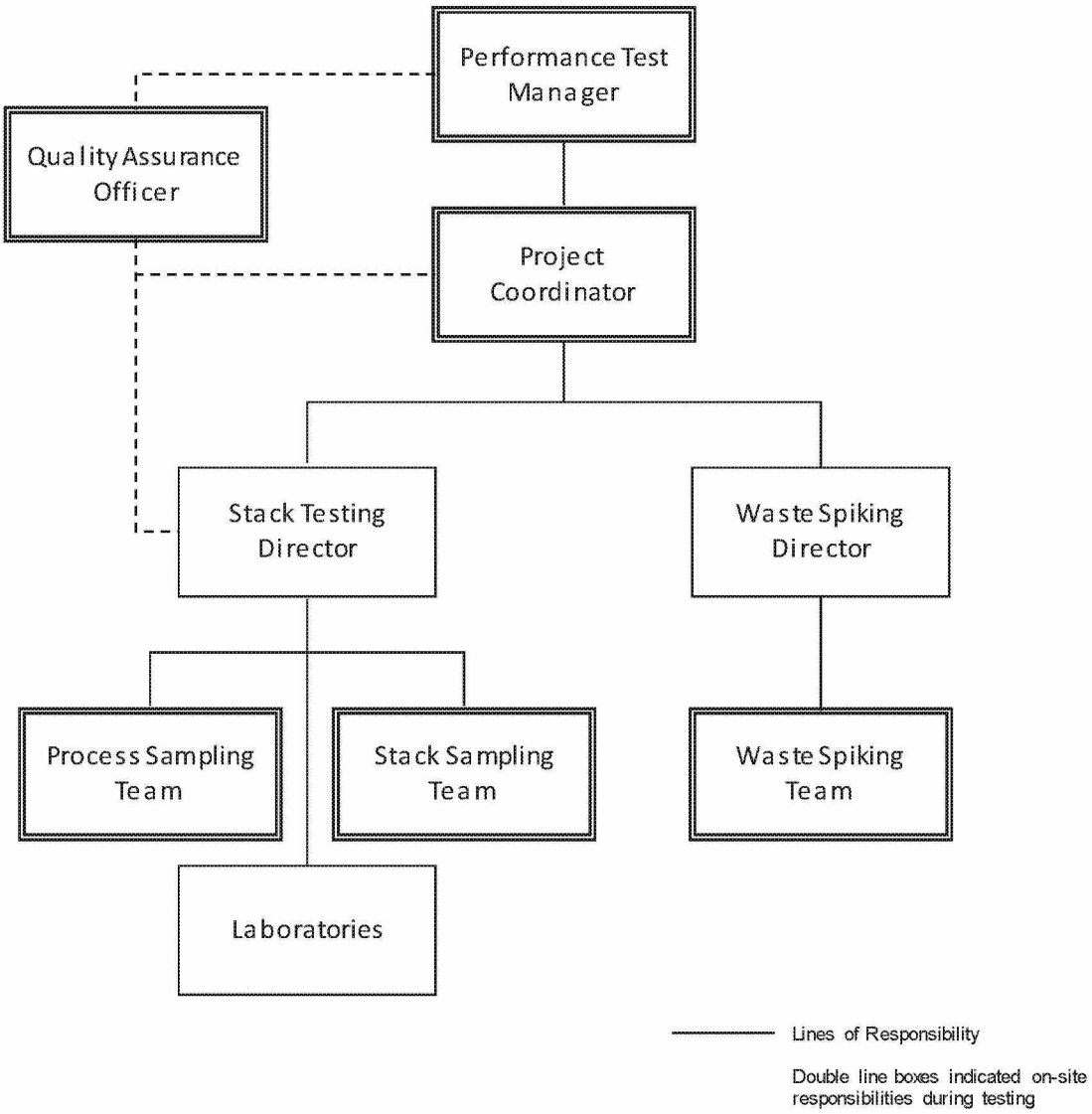

ED_002099_0000079-00181

3.0 SAMPLING PROCEDURES

This section provides descriptions of the waste and stack sampling procedures to be performed during the CPT.

3.1 WASTE SAMPLING

Waste samples will be collected during each run of the CPT. The waste sampling location will be clearly labeled during the CPT. Table 3-1 summarizes the waste sampling procedures.

TABLE 3-1
WASTE SAMPLING

WASTE	SAMPLING METHOD	SAMPLING AMOUNT/ FREQUENCY
Hydrocarbon contaminated waste stream	Scoop sampling	Approximately 250 mL at 30-minute intervals

The waste samples will be composited for each run into a one-gallon jar. At the conclusion of each run, the jar will be thoroughly mixed, and the sample will be divided into three 500-milliliter (mL) amber glass jars. The samples will be isolated from sources of contamination during the sampling and compositing efforts. One sample will be sent to the laboratory for analysis, one sample will be sent to the laboratory as a backup, and one sample will be archived onsite.

3.2 NATURAL GAS SAMPLING

The natural gas will not be sampled during the CPT. Sampling of this feedstream is not required for the compliance demonstrations.

3.3 SPIKING MATERIALS SAMPLING

The spiking materials will not be sampled and analyzed during the CPT. These will be pure materials purchased for testing. The suppliers will certify the spiking materials' compositions.

3.4 STACK GAS SAMPLING

The stack gas sampling will follow the methods documented in 40 CFR Part 60 Appendix A (USEPA Methods) and *Test Methods for Evaluating Solid Waste, Physical/Chemical Methods* (SW-846 Methods). Brief descriptions of these methods are provided in this section. Any modifications to prescribed USEPA or SW-846 test methods are outlined in the sampling procedure descriptions below. Table 3-2 summarizes the sampling procedures to be used during the CPT for collection of stack gas samples.

TABLE 3-2
STACK GAS SAMPLING

PARAMETER	SAMPLING METHOD	SAMPLE FRACTION(S)
Traverse points, gas flow rate, composition, and moisture content	USEPA Methods 1, 2, 3A, and 4	Not applicable
Particulate matter	USEPA Method 5	Filter and front-half acetone rinse
Hydrogen chloride and chlorine	USEPA Method 26A	Sulfuric acid impingers contents and rinses
		Sodium hydroxide impingers contents and rinses
Arsenic, beryllium, cadmium, chromium, lead, and mercury	USEPA Method 29	Filter and front-half nitric acid rinse
		Nitric acid/hydrogen peroxide impinger contents and rinses
		Knockout impinger contents and rinses
		Potassium permanganate impinger contents and rinses
		Potassium permanganate impinger hydrochloric acid rinse
Dioxins and furans	SW-846 Method 0023A	Filter
		Front-half acetone, methylene chloride, and toluene rinse
		Back-half acetone, methylene chloride, and toluene chloride rinse
		XAD-2 resin
Chlorobenzene	SW-846 Method 0030	Tenax™ resin
		Tenax™ resin/charcoal
		Condensate
Carbon monoxide	Facility CEMS	Not applicable
Oxygen	Facility CEMS	Not applicable

3.4.1 SAMPLING POINT DETERMINATION – USEPA METHOD 1

The number and location of the stack gas sampling points will be determined according to the procedures outlined in USEPA Method 1. Verification of absence of cyclonic flow will be conducted prior to testing by following the procedure described in USEPA Method 1. The cyclonic flow check will be performed once for the CPT.

3.4.2 FLUE GAS VELOCITY AND VOLUMETRIC FLOW RATE – USEPA METHOD 2

The flue gas velocity and volumetric flow rate will be determined according to the procedures outlined in USEPA Method 2. Velocity measurements will be made using Type S pitot tubes conforming to the geometric specifications outlined in USEPA Method 2. Differential pressures will be measured with fluid manometers. Effluent gas temperatures will be measured with thermocouples equipped with digital readouts.

3.4.3 Flue Gas Composition and Molecular Weight – USEPA Method 3A

The composition of the bulk gas and the gas molecular weight at the stack (concentrations of carbon dioxide and oxygen) will be determined by USEPA Method 3A. The stack sampling contractor will supply oxygen and carbon dioxide analyzers and all other associated equipment. The analyzers will be calibrated according to the procedures outlined in the method. A continuous sample of stack gas will be withdrawn via a sample probe. The gas will be filtered and passed through a conditioning system for removal of particulates and moisture prior to being sent to the analyzer.

The calculated molecular weight will be used for all isokinetic calculations. The measured oxygen concentration will also be used to correct emission concentrations to seven percent oxygen.

3.4.4 Flue Gas Moisture Content – USEPA Method 4

The flue gas moisture content will be determined in conjunction with each isokinetic train according to the sampling and analytical procedures outlined in USEPA Method 4. The impingers will be connected in series and will contain reagents as described for each sampling method. The impingers will be housed in an ice bath to ensure condensation of the moisture from the flue gas stream. Any moisture that is not condensed in the impingers is captured in the silica gel. Moisture content is determined by weighing the various sample fractions.

3.4.5 Particulate Matter, Hydrogen Chloride, and Chlorine – USEPA Methods 5 and 26A

The sampling and analytical procedures outlined in USEPA Method 5 and 26A will be used to determine PM and HCl/Cl_2 concentrations in the stack gas during the CPT condition. The sampling train will consist of a Teflon mat or quartz fiber filter, one impinger containing 50 mL of 0.1 Normal (N) sulfuric acid (if necessary due to high moisture conditions), two impingers each containing 100 mL of 0.1 N sulfuric acid, two impingers each containing 100 mL of 0.1 N sodium hydroxide, and an impinger containing at least 250 grams of silica gel. If deemed necessary based on site-specific conditions (*i.e.,* expected high HCl concentrations), an additional empty impinger may be placed between the acid and alkaline impingers to ensure that the HCl and Cl_2 fractions are completely isolated. A diagram of the sampling train is presented in Figure 3-1.

All sampling train components will be constructed of materials specified in the methods and will be cleaned and prepared per method specifications prior to testing. The probe and filter temperatures will be maintained between 248 degrees Fahrenheit (°F) and 273°F. The sampling runs will be performed within ± 10 percent of isokinetic conditions. The total sampling time will be a minimum of 120 minutes.

Sample recovery procedures will follow those outlined in the respective test methods. In accordance with Section 8.2.3 of USEPA Method 26A, sodium thiosulfate will be added to the alkaline impinger contents during recovery. Recovery of the USEPA Method 5/26A sampling train will result in the sample fractions listed in Table 3-2. For the USEPA Method 5 portion of the recovery, the filter will be packaged in a Petri dish, and the probe rinse will be collected in a glass jar. All impinger rinses and contents associated with the USEPA Method 26A recovery will be collected and shipped in amber glass jars.

3.4.6 Arsenic, Beryllium, Cadmium, Chromium, Lead, and Mercury – USEPA Method 29

The sampling procedures outlined in USEPA Method 29 will be used to determine the concentrations of arsenic, beryllium, cadmium, chromium, lead, and mercury in the stack gas during the CPT condition. The sampling train will consist of a set of six to seven impingers. If high moisture conditions are expected, the first impinger will be an empty knockout impinger. This impinger is optional and will only be used if necessary. The next two impingers will each contain 100 mL of a five percent nitric acid (HNO_3) and ten percent hydrogen peroxide solution (H_2O_2) solution. These impingers are followed by an empty impinger. The next two impingers will each contain 100 mL of a four percent potassium permanganate ($KMnO_4$) and ten percent sulfuric acid (H_2SO_4) solution. The final impinger will contain between 200 and 300 grams of silica gel. A detailed description of the types of impingers used in this sampling train can be found in USEPA Method 29. A diagram of the sampling train is presented in Figure 3-2.

All sampling train components will be constructed of materials specified in the method and will be cleaned and prepared per method specifications prior to testing. The probe and filter temperatures will be maintained between 223°F and 273°F. The sampling runs will be performed within ± 10 percent of isokinetic conditions. The total sampling time and minimum sample volume will be determined in accordance with method and/or rule requirements. If no such specifications are provided in the test method or applicable regulation, the total sample volume will be set such that the resulting detection limit provides the necessary level of analytical resolution. The total sample time will be established based upon the number of sample points and the minimum required sample volume.

Sample recovery procedures will follow those outlined in the test method. The USEPA Method 29 sampling train will produce the sample fractions listed in Table 3-2. The filter will be packaged in a Petri dish for shipping. All other sample fractions will be collected in amber glass jars. The filter and front half rinse and the contents and rinses from the HNO_3/H_2O_2 impingers will be analyzed for all target metals. The contents and rinses from the empty and $KMnO_4$ impingers will be analyzed for mercury only.

3.4.7 Dioxins and Furans – SW-846 Method 0023A

The sampling procedures outlined in SW-846 Method 0023A will be used to determine D/F concentrations in the stack gas during the CPT condition. The sampling train will consist of a glass fiber filter and coil condenser followed by a XAD-2 resin trap and a series of impingers. A total of four impingers will be used in the sampling train. The first of these impingers will be empty and will be followed by two impingers each containing 100 mL of high performance liquid chromatography (HPLC) water. These impingers will be followed by an impinger containing at least 250 grams of silica gel. A recirculating pump will also be connected to the sampling train to continuously circulate cold water to the condenser and resin trap in order to maintain the resin trap temperature below 68 degrees Fahrenheit (°F). A diagram of the sampling train is presented in Figure 3-3.

In preparation for the sampling event, a number of labeled sampling standards will be introduced inside the resin to monitor sampling efficiencies as well as to provide insights to the sample preservation and storage conditions. Upon preparation of the spiked resin traps, a separate fraction of resin from the same batch will be spiked the same day using the same solutions used in the field sampling modules and will be refrigerated in the laboratory until the return of the field samples. At such time, the control resin will become the laboratory method blank.

All sampling train components will be constructed of materials specified in the methods and will be cleaned and prepared per method specifications prior to testing. The probe and filter temperatures will be maintained between 223°F and 273°F (120 ± 14 degrees Celsius (°C)). The sampling runs will be performed within ±10 percent of isokinetic conditions. A minimum of 88.3 dry standard cubic feet (dscf) (2.5 dry standard cubic meters (dscm)) of sample gas will be collected over a minimum of 180 minutes.

The sampling train will be recovered according to the procedures specified in the method. The recovery of the sampling train will result in the sample fractions listed in Table 3-2. The filter will be shipped in a Petri dish, and all rinses will be collected in amber glass jars. The XAD-2 resin will be wrapped and shipped in the glass trap.

The front-half and back-half sample fractions will be spiked with extraction standards. The XAD-2 resin and front- and back-halves of the sampling train will be analyzed separately for D/F by SW-846 Methods 0023A and 8290A (high resolution gas chromatograph/high resolution mass spectroscopy).

3.4.8 Chlorobenzene – SW-846 Method 0030

The sampling procedures outlined in SW-846 Method 0030 will be used to determine chlorobenzene concentrations in the stack gas during the CPT condition. The sampling train draws effluent stack gas through a series of sorbent traps. The first trap will contain Tenax™ resin, and the second will contain a section of Tenax™ followed by a section of activated charcoal. A water-cooled condenser will be arranged so that condensate will drain vertically through the traps. New Teflon sample transfer lines will be used, and the sampling train will use greaseless fittings and connectors. The Tenax™ resin will be cleaned and tested, prior to testing, according to the QA requirements of the method. A diagram of the sampling train is presented in Figure 3-4.

Four pairs of sorbent traps will be collected per run. The sampled gas will be passed through each pair of traps for 20 minutes, resulting in a total sampling time of 80 minutes per test run. One sample of condensate will be collected per sampling run (four pairs). Three of the four pairs of tubes will be analyzed for each run. The fourth pair will be archived and will be analyzed if any of the other three tube sets cannot be analyzed. The sampling probe will be kept at or above 130°C during sampling. The sampling train will be operated at a sampling rate of approximately 1.0 liter per minute (L/min) for a total of 20 liters (L) of gas per sample.

Each pair of traps will be analyzed separately to evaluate breakthrough. Breakthrough is present if the catch on the second tube exceeds 30 percent of the catch on the first tube and is above 75 nanograms (ng).

3.4.9 Carbon Monoxide and Oxygen

The facility's continuous emissions monitoring systems (CEMS) will be used to measure the concentration of CO and oxygen in the stack gas during the CPT condition.

A continuous sample of stack gas will be withdrawn via a sample probe. The sampled gas will be filtered and will be passed through a conditioning system for removal of particulates and moisture prior to being sent to the analyzer. The CO concentration will be reported in parts per million by volume dry basis (ppmv dry) corrected to seven percent oxygen.

The permit requires that the CO and oxygen CEMS comply with the requirements of 40 CFR Part 266 Appendix IX. Performance and calibration of the CEMS during the CPT will follow the requirements of 40 CFR Part 266 Appendix IX and the continuous monitoring systems (CMS) performance evaluation test (PET) plan.

3.5 Sampling Quality Control Procedures

Specific sampling QC procedures will be followed to ensure the production of useful and valid data throughout the course of this test program.

Prior to the start of testing, all sampling equipment will be thoroughly checked to ensure clean and operable components and to ensure that no damage occurred during shipping. Once the equipment has been set up, the manometer used to measure pressure across the pitot tube will be leveled and zeroed, and the number and location of all sampling traverse points will be checked.

At the start of each test day and throughout the testing, all sample train components will be checked to ensure that they remain in good condition and continue to operate properly. Electrical components will be checked for damaged wiring or bad connections. All glassware will be inspected to make sure no cracks or chips are present.

All sampling trains will be assembled and recovered in a mobile laboratory to ensure a clean environment, free of uncontrolled dust. To ensure that the sampling trains are free of contamination, all glassware will remain sealed until assembly of the sampling train.

Pre-test and post-test leak checks will be performed for each sampling train, as required by the respective test methods. Care will be taken to make sure that all sampling trains are being operated within the specifications of their respective method.

At the end of testing each day, all sampling equipment will be sealed and covered to protect from possible contamination and weather damage.

FIGURE 3-1
USEPA METHODS 5 AND 26A SAMPLING TRAIN

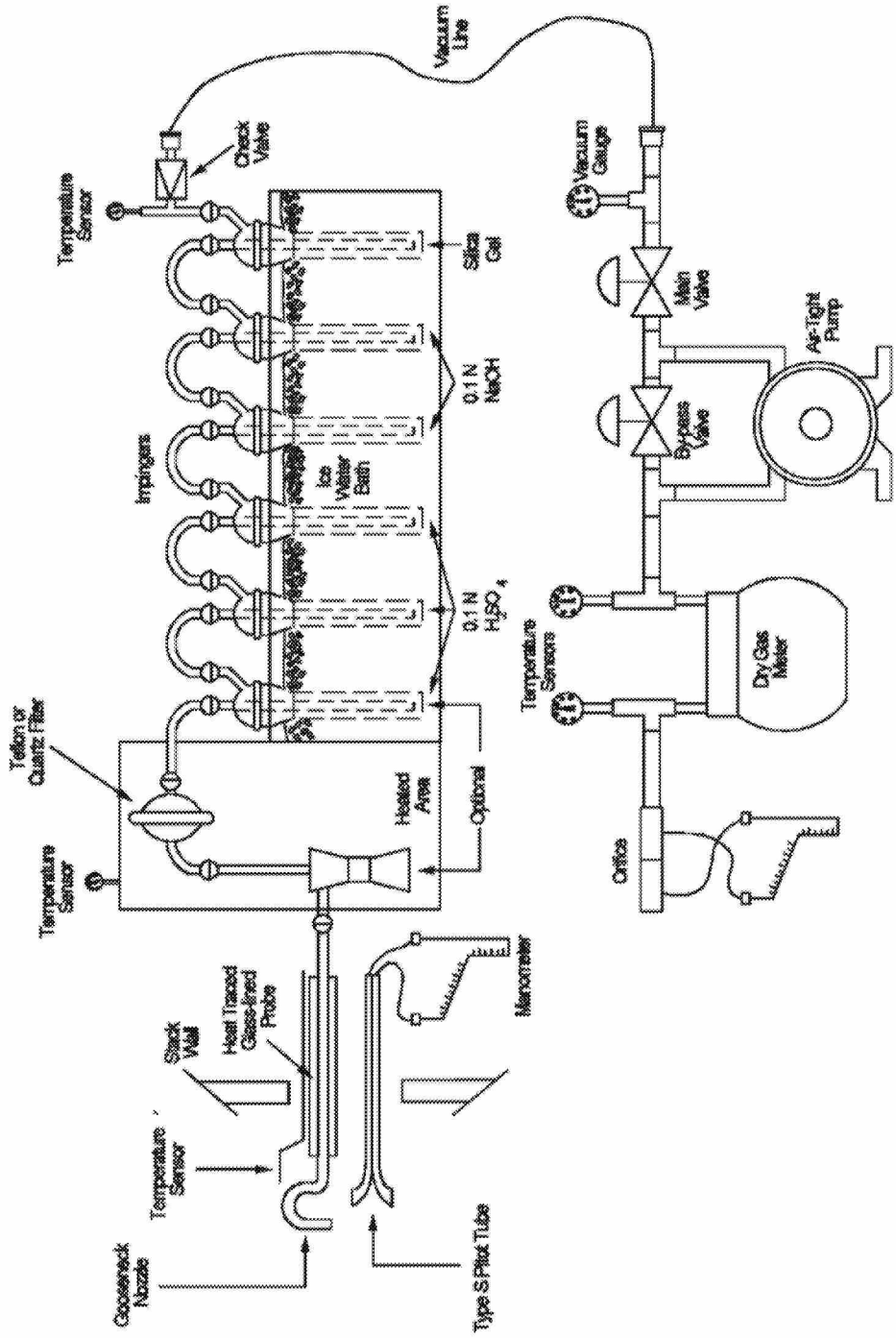

Note: If high HCl concentrations are expected, an additional empty impinger may be added between the acid and alkaline impingers.

FIGURE 3-2
USEPA METHOD 29 SAMPLING TRAIN

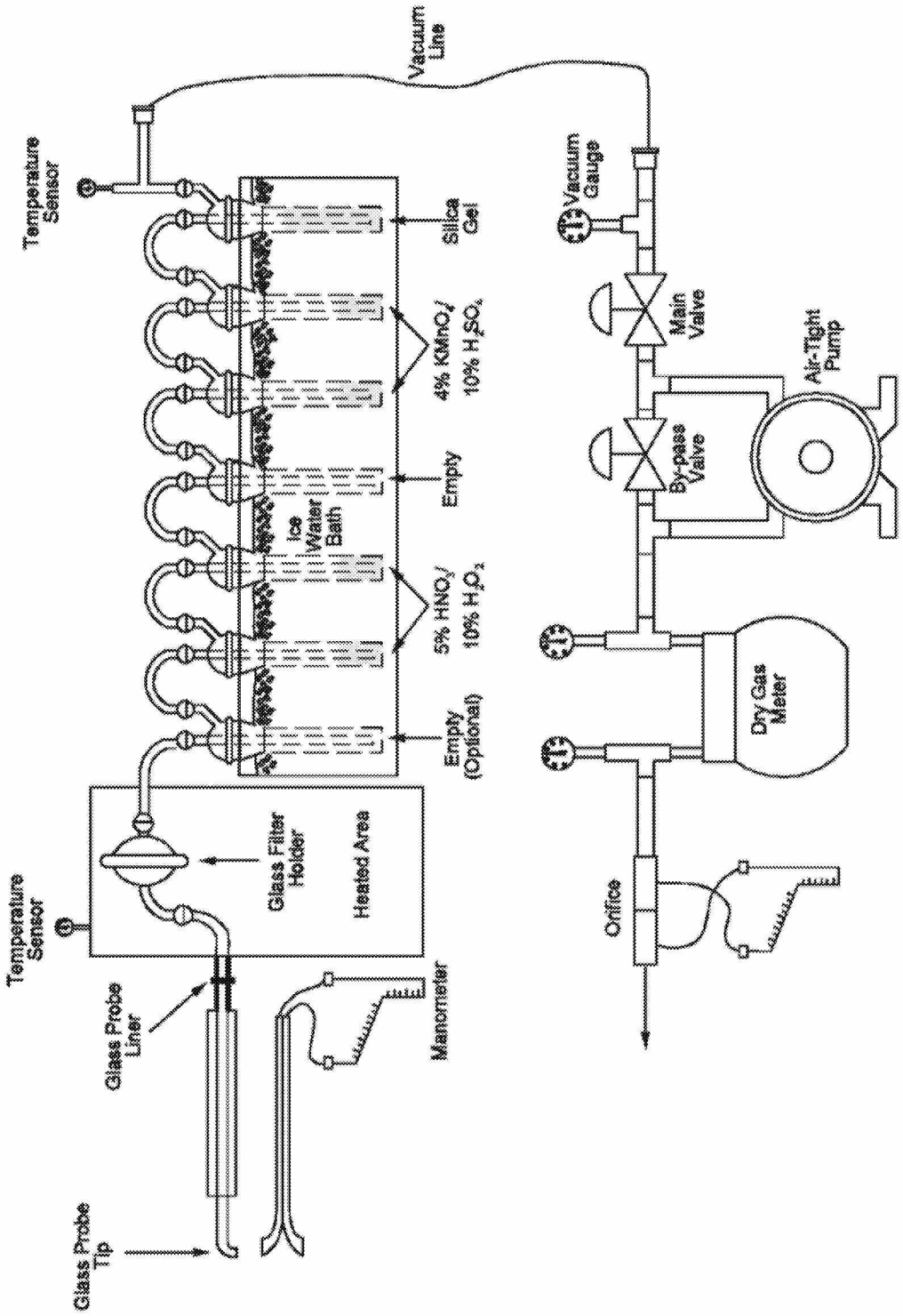

Note: If mercury is not an analyte, the fourth through sixth impingers are not required.

ED_002099_0000079-00189

FIGURE 3-3
SW-846 METHOD 0023A SAMPLING TRAIN

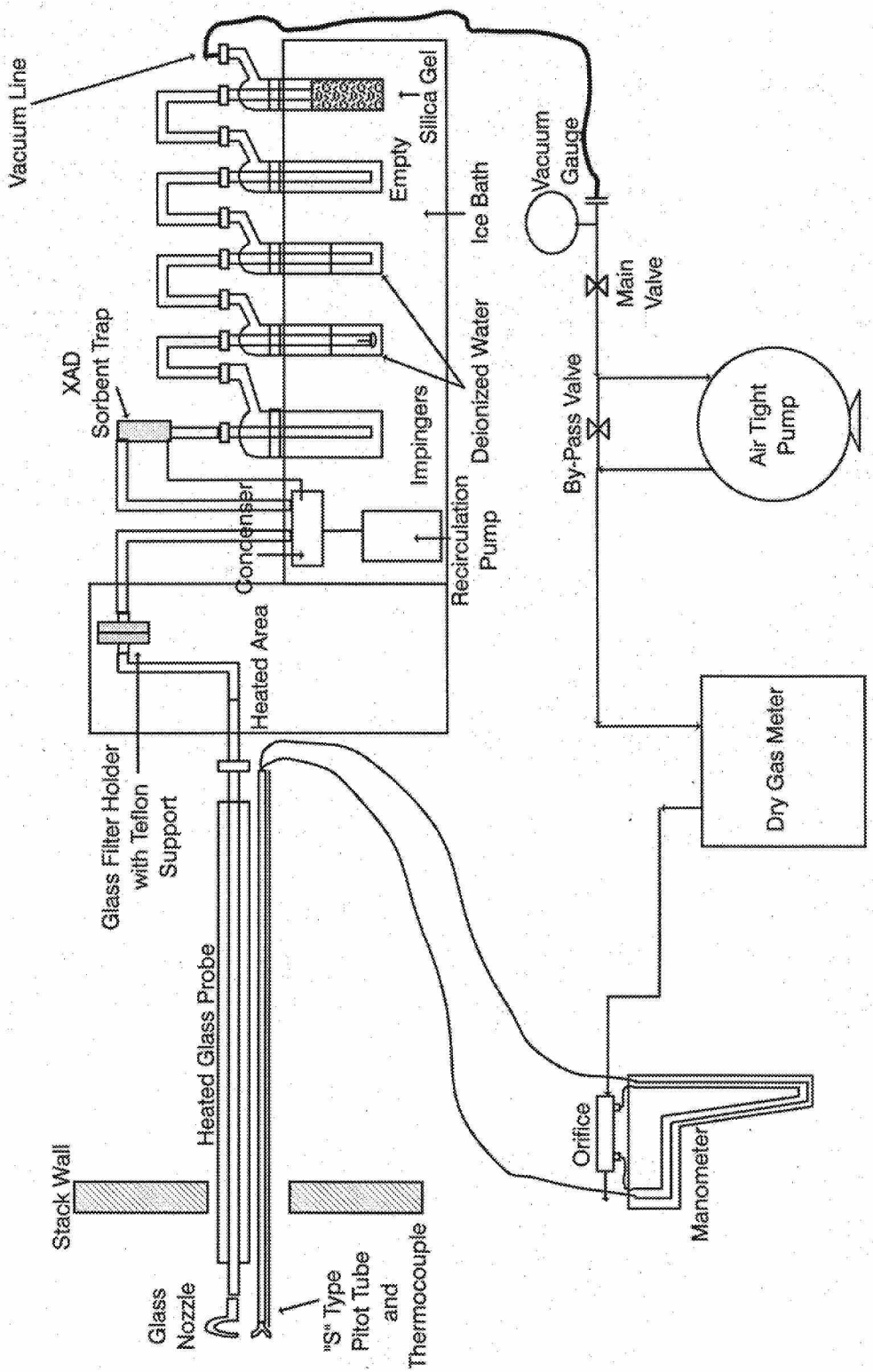

FIGURE 3-4
SW-846 METHOD 0030 SAMPLING TRAIN

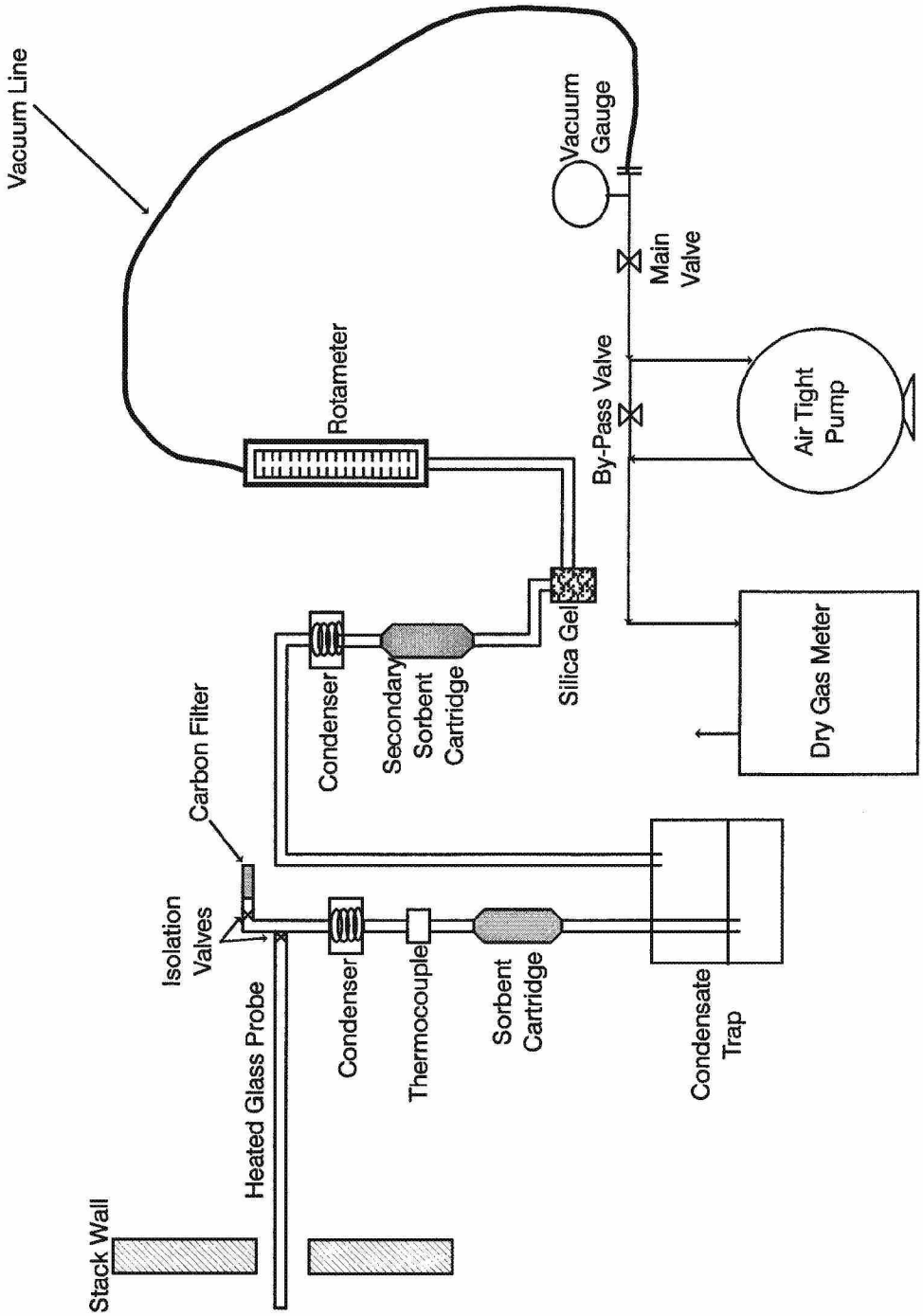

ED_002099_0000079-00191

4.0 SAMPLE HANDLING AND DOCUMENTATION

Sample custody procedures for this program are based on procedures from *Handbook: QA/QC Procedures for Hazardous Waste Incineration* (QA/QC Handbook) and SW-846, Chapter One. The procedures that will be used are discussed below.

4.1 FIELD SAMPLING OPERATIONS

The stack sampling contractor will be responsible for ensuring that custody and sample tracking documentation procedures are followed for the field sampling and field analytical efforts. Documentation of all sample collection activities will be recorded on pre-printed data collection forms. Table 4-1 provides a summary of sample custody documentation requirements.

TABLE 4-1
SAMPLE CUSTODY DOCUMENTATION REQUIREMENTS

CUSTODY DOCUMENT	REQUIRED INFORMATION
Sample identification log	List of all samples taken
	Time and date of sampling
	Description of sample
	Unique identifier for each sample
Sample data forms	Sampler's name
	Date and time of sample collection
	Sampling technique
	Compositing technique (waste samples)
	Sample identifier
	Sampling location
Chain of custody	Identifier of every sample shipped
	Sample preservation requirements
	Analysis and preparation procedures requested
	Signature of individual relinquishing sample custody

Samples will be collected, transported, and stored in clean containers that are constructed of materials inert to the analytical matrix, such as glass jars. Only containers that allow airtight seals will be used. Amber glass will be employed when specified by the method. All waste feed samples that are collected will be packed by the stack sampling contractor for transfer or shipment to the appropriate laboratories. Sample tracking and custody forms, which include sample identification and analysis requests, will be enclosed in the sample shipment container.

Upon receipt by the laboratory, information pertaining to the samples will be recorded on the sample tracking and custody form or an attachment to the form. The laboratory will note the overall condition of the samples, including the temperature of the samples upon receipt. The laboratory will also note any discrepancy in the sample identification between the sample labels and the custody forms. The signature of the person receiving the samples will be provided on the chain of custody (COC).

Every record pertaining to sample collection activities, including, but not limited to, stack sampling data sheets, process sample data sheets, sample tracking forms, sample identification log, sampling equipment calibration forms, balance calibration forms, and reagent preparation will be submitted with the report to provide evidence that the samples were handled properly, taken at the correct time and in the correct manner, assigned a unique identifier, received intact by the laboratory, and preserved as appropriate. Adherence to the holding times indicated in Section 5, Tables 5-1 and 5-2, will be noted in the laboratory analytical results.

4.2 Field Laboratory Operations

The stack sampling contractor will provide an onsite laboratory trailer for sample train assembly and recovery and documentation and recordkeeping activities. Sample tracking documentation, shipping records, reagent and standards traceability, and all sampling activity records will be maintained in the laboratory trailer.

Documentation of onsite analytical activities, such as calibration, standards traceability, sample preparation steps, and raw measurement results will also be maintained onsite.

5.0 ANALYTICAL PROCEDURES

The analytical methods to be used during this test effort are detailed in Tables 5-1 and 5-2. Table 5-1 presents the analytical methods for waste samples. Table 5-2 presents the analytical methods for stack gas samples. These tables present the referenced analytical method, the laboratory performing the analysis, the extraction and analysis holding time, and if required, the sample preservation and sample preparation method. Collection of these samples was described in Section 3. Note that the tables in Section 3 specified which samples are to be collected using which methods; the tables included in this section specify the preparation and analytical methods to be used to evaluate each sample.

TABLE 5-1
SAMPLE PREPARATION AND ANALYSIS PROCEDURES FOR WASTE SAMPLES

PARAMETER	ANALYTICAL METHOD [1,2]	PRESERVATIVE REQUIRED	EXTRACTION HOLDING TIME (DAYS)	ANALYSIS HOLDING TIME (DAYS)	PREPARATION METHOD [1,2]
Arsenic, beryllium, cadmium, chromium, and lead	SW-846 Method 6010C	NA [3]	NA	180	SW-846 Method 3010A
Mercury	SW-846 Method 7470A or 7471B	Ice	NA	28	NA
Chlorine	SW-846 Method 9056	NA	NA	28	SW-846 Method 5050
Chlorobenzene	SW-846 Method 8260B	Ice	NA	14	SW-846 Method 5030B

1 SW-846 refers to *Test Methods for Evaluating Solid Waste, Third Edition*.
2 All methods will be performed in accordance with the laboratory's LELAP-approved SOP.
3 NA indicates not applicable.

TABLE 5-2
SAMPLE PREPARATION AND ANALYSIS PROCEDURES FOR STACK GAS SAMPLES

PARAMETER	ANALYTICAL METHOD [1,2]	PRESERVATIVE REQUIRED	EXTRACTION HOLDING TIME (DAYS)	ANALYSIS HOLDING TIME (DAYS)	PREPARATION METHOD [1,2]
Molecular weight	USEPA Method 3A	NA [3]	NA	NA	NA
Moisture	USEPA Method 4	NA	NA	NA	NA
Particulate matter	USEPA Method 5	NA	NA	180	NA
Hydrogen chloride and chlorine	USEPA Method 26A	NA	NA	28	NA
Arsenic, beryllium, cadmium, chromium, and lead	SW-846 Method 6010C	NA	NA	180	USEPA Method 29
Mercury	SW-846 Method 7470A	NA	NA	28	USEPA Method 29
Dioxins and furans	SW-846 Methods 0023A and 8290A [4]	≤6°F in the dark	30	45 following extraction	SW-846 Methods 0023A and 8290A [4]
Benzene	SW-846 Method 8260B	Ice	NA	14	SW-846 Method 5041A
Carbon monoxide and oxygen	Facility CEMS	NA	NA	NA	NA

1 SW-846 refers to *Test Methods for Evaluating Solid Waste, Third Edition*. USEPA Method refers to New Source Performance Standards, Test Methods and Procedures, Appendix A, 40 CFR Part 60.

2 All methods will be performed in accordance with the laboratory's LELAP-approved SOP.

3 NA indicates not applicable.

4 Methods will be performed in accordance with the LELAP-approved SOP KNOX-ID-0004.

6.0 DATA QUALITY OBJECTIVES

The purpose of this test program is to demonstrate compliance with the performance standards of Condition V.G.10 of the permit. CWM is committed to ensuring that the data generated during this project are scientifically valid, defensible, complete, and of known precision and accuracy. These objectives can be best achieved by applying the requirements of USEPA accepted methodology as well as the more specific recommendations and guidelines for test burns. To ensure the consistency and adequacy of plans, reports, and overall data quality, guidance from Chapter One of SW-846 and the QA/QC Handbook has been integrated into the approaches and philosophies of this QAPP.

Key measures of performance include the objectives for precision, accuracy, representativeness, completeness, and comparability (commonly referred to as PARCC parameters). This section presents project-specific data quality objectives for this CPT. These objectives represent the level of data quality that would be considered acceptable for valid decision making, as measured in a manner that best reflects performance in the actual project matrices. These objectives will be communicated to the entire project team, including onsite sampling personnel and offsite contract laboratories.

6.1 QUALITY CONTROL PARAMETERS

QC objectives include precision, accuracy, representativeness, comparability, and completeness. Typical QC parameters include matrix spike (MS) and MS duplicate (MSD) samples, laboratory control sample (LCS) and LCS duplicate (LCSD) samples, surrogates, standards, spikes, and duplicates. Tables 6-1 and 6-2 provide the project specific QC procedures for assessing accuracy and precision for critical measurement parameters. Critical parameters are those that directly relate to the demonstration of regulatory compliance. These tables list the parameter of analysis, the QC parameter, the QC procedure, the frequency at which accuracy and precision are determined, and the objective.

TABLE 6-1
QUALITY CONTROL OBJECTIVES FOR WASTE SAMPLES

ANALYTICAL PARAMETERS	QC PARAMETER	QC PROCEDURE	FREQUENCY [1]	OBJECTIVE [1]
Arsenic, beryllium, cadmium, chromium, and lead	Precision	Field duplicate	One per test program	≤25% relative percent difference [2]
	Precision	Matrix spike duplicate	One per analytical batch	≤20% relative percent difference [2]
	Accuracy	Laboratory control sample	One per analytical batch	80-120% recovery
	Accuracy	Matrix spike	Two per analytical batch	75-125% recovery
Mercury	Precision	Field duplicate	One per test program	≤25% relative percent difference [2]
	Precision	Matrix spike duplicate	One per analytical batch	≤20% relative percent difference [2]
	Accuracy	Laboratory control sample	One per analytical batch	90-110% recovery
	Accuracy	Matrix spike	Two per analytical batch	85-115% recovery
Chlorine	Precision	Field duplicate	One per test program	≤20% relative percent difference [2]
		Sample duplicate	One per analytical batch	≤10% relative percent difference [2]
		Matrix spike duplicate	One per analytical batch	≤10% relative percent difference [2]
	Accuracy	Laboratory control sample	One per analytical batch	80-120% recovery
		Matrix spikes	Two per analytical batch	80-120% recovery
Chlorobenzene	Precision	Field duplicate	One per test program	≤20% relative percent difference [2]
	Precision	Matrix spike duplicate [3]	One per condition	≤24% relative percent difference [2]
	Precision	Surrogates	One per condition	≤35% relative standard deviation of recovery
	Accuracy	Matrix spike [3]	Two per condition	54-145% recovery
	Accuracy	Surrogates	Every sample	75-137% recovery for toluene-d8

[1] Unless specified otherwise, the frequency and objective provided for each parameter are based on specifications in the analytical method.

[2] If the concentrations are less than five times the reporting limit, the laboratory will be unable to control these limits.

[3] Matrix spikes are not applicable on samples with greater than 0.1% of the target analyte.

TABLE 6-2
QUALITY CONTROL OBJECTIVES FOR STACK GAS SAMPLES

ANALYTICAL PARAMETERS	QC PARAMETER	QC PROCEDURE	FREQUENCY [1]	OBJECTIVE [1]
Particulate matter	Precision	Sample duplicate	Every sample	≤0.5 mg difference
Hydrogen chloride and chlorine	Accuracy	Laboratory control sample	One per analytical batch	80-120% recovery
	Accuracy	Matrix spike	One per analytical batch	90-110% recovery
	Precision	Matrix spike duplicate	One per analytical batch	≤25% relative percent difference
	Precision	Duplicate injections	Every sample	≤5% difference from mean
Arsenic, beryllium, cadmium, chromium, and lead	Accuracy	Laboratory control sample	One per analytical batch	80-120% recovery
	Accuracy	Post digestion spike	One per analytical sequence	75-125% recovery
	Precision	Laboratory control sample duplicate	One per analytical batch	≤25% relative percent difference
Mercury	Accuracy	Laboratory control sample	One per analytical batch	80-120% recovery
	Accuracy	Matrix spike	One per back-half analytical batch	75-125% recovery
	Accuracy	Post digestion spike	One front-half sample	75-125% recovery
	Precision	Matrix spike duplicate	One per back-half analytical batch	≤25% relative percent difference
Dioxins and furans	Precision	Laboratory control sample duplicate	One per analytical batch	≤50% relative percent difference
	Accuracy	Extraction standards	Every sample	40-135% recovery
	Accuracy	Sampling standards	Every back-half sample	70-130% recovery
	Accuracy	Laboratory control samples	Two per analytical batch	70-130% recovery

ED_002099_0000079-00198

TABLE 6-2 (CONTINUED)
QUALITY CONTROL OBJECTIVES FOR STACK GAS SAMPLES

ANALYTICAL PARAMETERS	QC PARAMETER	QC PROCEDURE	FREQUENCY [1]	OBJECTIVE [1]
Chlorobenzene	Precision	Laboratory control sample duplicate	One per analytical batch	Sorbent: ≤26% relative percent difference Condensate: ≤20% relative percent difference
	Accuracy	Surrogates	Every sample	Sorbent: 57-134% recovery for toluene-d8 Condensate: 79-120% recovery for toluene-d8
	Accuracy	Laboratory control sample	Two per analytical batch	Sorbent: 65-120% recovery Condensate: 77-120% recovery

[1] Unless specified otherwise, the frequency and objective provided for each parameter are based on specifications in the analytical method.

6.1.1 PRECISION

Precision is a measure of the reproducibility of results under a given set of conditions. It is expressed in terms of the distribution, or scatter, of replicate measurement results, calculated as the relative standard deviation (RSD) or, for duplicates, as relative percent difference (RPD). RPD and RSD values are calculated using the following equations:

$$RPD = \left(\frac{|X_1 - X_2|}{\text{avg } X} \right) x\ 100$$

$$RSD = \left(\frac{STDEV}{\text{avg } X} \right) x\ 100$$

Where X_1 and X_2 represent each of the duplicate results.

6.1.2 ACCURACY

Accuracy is a measure of the difference between an analysis result and the "true" value. Accuracy is expressed in terms of percent recovery (*e.g.*, for surrogates, spikes, and reference material). Percent recovery for spiked samples, such as MS samples, is calculated using the following equation:

$$\%\,Recovery = \left(\frac{SSR - SR}{SA} \right) x\ 100$$

Where:

SSR = Spiked sample result

SR = Sample result

SA = Spike added

Percent recovery for other QC parameters, such as LCS, surrogates, and standards, is calculated using the following equation:

$$\%\ \text{Recovery} = \left(\frac{\text{Measured Value}}{\text{True Value}}\right) \text{x } 100$$

6.1.3 Representativeness

Representativeness is defined as the degree to which data accurately and precisely represent a characteristic of a population, a parameter variations at a sampling point, a process condition, or an environmental condition. An appropriate sampling strategy that addresses collection of representative samples in time and space is crucial to subsequent decision-making and defensibility of the data. There are no numerical objectives for representativeness. The selection of suitable locations and sampling strategies, as described in this QAPP, and adherence to sample collection protocols are the bases for ensuring representativeness.

6.1.4 Comparability

Comparability is defined as expressing the confidence with which one data set can be compared to another. There are no numerical objectives for comparability. A representative sample whose results are comparable to other data sets is ensured primarily through the use of standard reference sampling and analytical methods. Reported in common units, the results generated should thus be comparable to those obtained from other emissions tests and allow for consistent decision-making.

6.1.5 Completeness

Completeness is defined as "the amount of valid data obtained from a measurement system compared to the amount that was expected to be obtained under optimal normal conditions." Completeness can be defined quantitatively using the following equation:

$$\%\ \text{Completeness} = \left(\frac{\text{No. of Valid Data}}{\text{No. of Data Planned}}\right) \text{x } 100$$

In the overall project context, the target is 100 percent completeness, which for a valid test condition is defined as consisting of three valid test runs. A valid test run is one in which sufficient valid data are presented to make any necessary demonstrations and to enable the permit writer/reviewer to write appropriate permit conditions or to be confident about demonstration of compliance with a current permit or regulation.

ED_002099_0000079-00200

A run can be valid even though the completeness objective of 100 percent for the data package is not achieved. Given the possibility of human error (and other unpredictable problems) and the inability of collecting additional samples after a test is completed, the impact of achieving less than 100 percent completeness must be assessed in the specific situation, rather than arbitrarily rejecting all the useable scientific information for the run without such consideration. For example, satisfying the completeness objective for a single piece of analytical data includes providing documentation that proves the following:

- An acceptable number of sub-samples were collected and composited;
- Compositing procedures were followed;
- The sample collection log was completed;
- Shipping documents and laboratory instructions were prepared and followed;
- The correct analytical procedures were followed;
- Any necessary modifications to methodology were documented and justified;
- Approved laboratory records were complete;
- Proper data reduction procedures were followed; and
- Analytical instrument printouts were included.

Clearly, the failure of a sampler to note the time a sub-sample was taken (where the previous and following sample times are noted) has less impact on the validity and acceptability of a data package than a failure by the laboratory to demonstrate that the analytical instrument was properly calibrated.

Any errors or omissions in a data package will be identified and accompanied by a discussion of the potential impact on the validity of the data package, the conclusions of the report, and the demonstration of performance standards for the consideration and approval of the LDEQ.

6.2 Evaluation of Contamination Effects

Various blanks will be collected throughout the test program to evaluate the effects of contamination on results. Field blanks will be collected during the test program as required by the respective method. Blank samples of all reagents used in the stack sampling program will also be collected. Method blanks will be prepared and analyzed by the respective laboratories to evaluate the cleanliness of sample handling and preparation and overall laboratory practices. Since field and reagent blanks cannot be collected for waste samples, the laboratory method blank will be used to determine the effects of contamination for waste analyses.

Table 6-3 provides the type and acceptance criteria for each stack gas blank to be analyzed. These blanks, as well as the laboratory method blanks for the waste samples, provide critical information on the potential contamination that may occur in test program samples. The results of blank analyses can

ED_002099_0000079-00201

prove very useful when attempting to understand anomalies in data, or generally higher than expected test results.

TABLE 6-3
BLANK ANALYSIS OBJECTIVES FOR STACK GAS SAMPLES

ANALYTICAL PARAMETERS	BLANK TYPE	FREQUENCY	OBJECTIVE
Particulate matter	Reagent blank	One per test program	<0.001 percent
Hydrogen chloride and chlorine	Method blank	One per analytical batch	<Reporting limit
	Reagent blanks	One per test program	<Reporting limit
Arsenic, beryllium, cadmium, chromium, lead, and mercury	Initial calibration blank	Following initial calibration verification	<Reporting limit
	Continuing calibration blank	Following continuing calibration verification	<Reporting limit
	Method blank	One per batch	<Reporting limit
	Reagent blanks	One set per test program	<Reporting limit
Dioxins and furans	Field blank	One per test program	<Reporting limit
	Method blank	One per analytical batch	<Reporting limit
	Reagent blanks	One set per test program	Archived [1]
Chlorobenzene	Field blank	One per condition	<Reporting limit
	Trip blank	One per shipment	Archived [1]
	Method blank	One per analytical batch	<Reporting limit
	Reagent blanks	One set per test program	Archived [1]

[1] The specified reagent blanks will initially be archived. These blanks will only be analyzed if the field blank indicates possible sample contamination. Possible contamination will be assessed using the objectives for field blanks stated in this table.

6.3 PERFORMANCE AUDITS

On September 13, 2010, the USEPA issued a final rule to restructure the stationary source audit program. The program requires that audit samples be analyzed along with the samples collected while testing for regulatory compliance. This analysis helps the regulatory agency determine the validity of compliance test results. The rule requires sources to obtain and use audit samples from accredited providers. The USEPA has approved the National Environmental Laboratory Accreditation Conference (NELAC) Institute (TNI) Stationary Source Audit Program to provide accredited audit samples.

Audit samples are currently available for USEPA Method 26A (HCl only) and USEPA Method 29. CWM will obtain the required audit samples prior to the CPT. Audit samples will only be obtained if the expected concentration is within the Stationary Source Audit Sample (SSAS) Table certified concentration range (http://www.nelac-institute.org/ssas/).

6.4 Corrective Action

During any testing project, simple or complex, there is potential that deviations from data quality objectives may occur. This section gives corrective action procedures to be used to mitigate such problems.

6.4.1 Equipment Failure

Any equipment found to be out of calibration or operating improperly will be repaired or replaced before additional measurements are made. If equipment repair is made onsite, calibrations will be performed in accordance with the applicable methods prior to use. It may be necessary to transport equipment offsite for calibration. If calibrations cannot be performed, the equipment will not be used. If measurements are made with equipment subsequently found to be out of calibration or operating improperly, a detailed explanation of the cause of the malfunction will be provided. The effect of the malfunction on the data will be assessed, and the data will be qualified.

6.4.2 Analytical Deviations

For analyses where a method QC check sample, such as a method blank, does not meet method specifications, the problem will be investigated to determine the cause as well as any corrective action that should be taken. Once the corrective action has been taken, the analysis will be re-examined to verify that the problem has been eliminated.

In instances of out of specification spikes or calibrations, the samples involved will be re-extracted or reanalyzed if possible. In those instances where reanalyzing the sample is not possible, corrective measures will be taken to improve method performance prior to analysis of the next batch of samples.

Results for samples where matrix interferences preclude meeting objectives for recoveries of surrogates or spikes will be evaluated for potential bias to calculated emission results.

6.4.3 Contamination

The handling procedures samples taken during this test project, from blank testing to sample collection and analysis, are designed to eliminate contamination by limiting their exposure to contaminants in the ambient air and other outside sources. If levels of contamination are present above the reporting limits in the analyzed blanks, the archived blank samples will be analyzed. Corrective action will be taken if the results of the field blanks are significantly different from those of the reagent blanks or trip blanks. This comparison will indicate whether high levels in the field blank are due to contamination from exposure to outside sources, contamination of reagent materials, or, in the case of resin traps, from degradation of the traps.

6.4.4 Procedural Deviations

SOPs for the methods being performed will be available onsite during all testing. CWM and the project team will determine an appropriate action in all cases where standard procedures cannot resolve the problem. The action will be implemented after approval from the representatives of the LDEQ.

7.0 CALIBRATION PROCEDURES AND PREVENTATIVE MAINTENANCE

This section presents a brief discussion of calibration and routine maintenance procedures to be used for sampling and analytical equipment. Criteria for analytical calibrations are also included. Calibration procedures for each analytical method are discussed in detail within the methods.

7.1 SAMPLING EQUIPMENT

All sampling equipment will be provided by the stack sampling contractor. The equipment will be calibrated prior to arrival onsite and after all testing has been completed. The sampling equipment calibration requirements and acceptance limits are listed in Table 7-1.

The equipment will be calibrated according to the criteria specified in the reference method being employed. In addition, the stack sampling contractor will follow the guidelines set forth in the *Quality Assurance Handbook for Air Pollution Measurement Systems, Volume III, Stationary Source Specific Methods*. When these methods are inapplicable, methods such as those prescribed by the ASTM International (ASTM) will be used. Dry gas meters, orifices, nozzles, and pitot tubes are calibrated in accordance with these documents. The range of the calibration is specified for all environmental measurements to encompass the range of probable experimental values. This approach ensures that all results are based upon interpolative analyses rather than extrapolative analyses. Calibrations are designed to include, where practical, at least four measurement points evenly spaced over the range. This practice minimizes the probability that false assumptions of calibration linearity will be made. In addition, it is common practice to select, when practical, at least one calibration value that approximates the levels anticipated in the actual measurement.

Data obtained during calibrations are recorded on standardized forms, which are checked for completeness and accuracy. Data reduction and subsequent calculations are performed using computer software. Calculations are checked at least twice for accuracy. Copies of calibration forms will be included in the test or project reports.

ED_002099_0000079-00204

TABLE 7-1
SAMPLING EQUIPMENT CALIBRATION REQUIREMENTS

STACK GAS PARAMETER	QUALITY PARAMETER	METHOD OF DETERMINATION	FREQUENCY	CRITERIA
Gas flow	Pitot tube angle and dimensions	Measurements with a vernier micrometer and angle indicator	Pre-test and post-test	To specifications in USEPA Method 2
	Barometer	Calibrated vs. National Weather Service station	Pre-test and post-test	Within 0.1 inches mercury
	Stack gas thermocouple	Calibrated vs. ASTM mercury-in-glass thermometer	Pre-test and post-test	Within 1.5% as °R
Isokinetic sampling trains	Dry gas meter	Calibrated against a reference wet test meter	Pre-test and post-test	1. Y within 0.05 of pre-test Y 2. H@ within 0.15 of pre-test
	Probe nozzle [1]	Measurements with a vernier micrometer to 0.001 inches	Pre-test	Maximum difference in any two dimensions within 0.004 inches
	Dry gas meter thermocouples	Calibrated vs. ASTM mercury-in-glass thermometer	Pre-test and post-test	Within 1.5% as °R
	Trip balance	Calibrated vs. standard weights	Pre-test	Within 0.5 grams
Non-isokinetic sampling trains	Dry gas meter	Calibrated against a reference wet test meter	Pre-test and post-test	1. Y within 0.05 of pre-test Y 2. H@ within 0.15 of pre-test
	Dry gas meter thermocouples	Calibrated vs. ASTM mercury-in-glass thermometer	Pre-test and post-test	Within 1.5% as °R
Carbon dioxide and oxygen analyzers	Analyzer calibration error test	Checked using USEPA Protocol 1 calibration gases	Before the test run and after any failed system bias or drift check	±2% of calibration span
	System bias test	Checked using USEPA Protocol 1 calibration gases	Before and after each test run	±5% of calibration span
	System drift check	Checked using USEPA Protocol 1 calibration gases	After the post-test system bias test	±3% of calibration span
Carbon monoxide analyzer (Facility CEMS)	Calibration drift check	Checked using calibration gases	Daily	±3% of calibration span
Oxygen analyzer (Facility CEMS)	Calibration drift check	Checked using calibration gases	Daily	±0.5% volume

[1] Glass or Quartz nozzles will be used, and the calibration cannot change.

ED_002099_0000079-00205

7.1.1 Pitot Tubes

Each pitot tube is inspected in accordance with the geometry standards contained in USEPA Method 2. A calibration coefficient is calculated for each pitot tube.

7.1.2 Differential Pressure Gauges

Fluid manometers do not require calibration other than leak checks. Manometers are leak-checked in the field prior to each test series and again upon completion of testing.

7.1.3 Digital Temperature Indicator

One digital temperature indicator is used to determine the flue gas temperature, probe temperature, oven temperature, impinger outlet temperature, and dry gas meter temperature. The digital temperature indicator is calibrated over a seven-point range (32 to 375°F) using an ASTM mercury-in-glass thermometer as a reference. The calibration is acceptable if the agreement is within ±1.5 percent in degrees Rankine (°R) in the temperature range of 492 to 654°R (32 to 194°F).

7.1.4 Dry Gas Meter and Orifice

A calibrated wet test meter is used as a reference meter to fully calibrate the dry gas meter and orifice. For the orifice, an orifice calibration factor is calculated for each of the 18 flow settings. For the dry gas meter, the full calibration provides the calibration factor of the dry gas meter.

7.1.5 Barometer

The stack sampling contractor personnel will calibrate the barometer prior to arrival onsite against a National Weather Service station.

7.1.6 Nozzle

Glass nozzles will be calibrated onsite using a micrometer. Eight readings will be taken at quarter turns, followed by two measurements at random. The arithmetic average of the values obtained during the calibration is used.

7.1.7 Continuous Emissions Monitors

The stack sampling contractor will supply CEMS to measure the concentrations of carbon dioxide and oxygen in the stack gas. The monitors will be calibrated according to the procedures outlined in the respective test methods.

The facility's CEMS will be used to measure the concentrations of CO and oxygen in the stack gas. A calibration drift check is performed daily as required by 40 CFR Part 266 Appendix IX.

7.2 Analytical Equipment

Analytical equipment calibration and QC procedures and internal QC checks are included to ensure accuracy of the measurements made by laboratory equipment. Table 7-2 provides a summary of the calibration and QC checks included for each analytical method for this test program.

Table 7-2
Summary of Analytical Equipment Calibration and Quality Control Checks

Parameter	Quality Control Check	Method of Determination	Frequency	Acceptance Criteria
Particulate matter	Calibration check	Class S weights	Daily	≤0.5 milligrams
Hydrogen chloride and chlorine	Initial calibration	Four levels	Initially and as needed	r ≥ 0.995
	Continuing accuracy check	Instrument calibration verification	Following initial calibration	±10% difference
	Continuing calibration	Midpoint standard	Every 10 samples	±10% difference
Arsenic, beryllium, cadmium, chromium, and lead	Initial calibration	Calibration blank with at least one standard	Daily before analysis	Analysis of second calibration standard ±10 % difference
	Calibration check	Instrument calibration verification	Following initial calibration	±10% difference with relative standard deviation <5% from replicate (minimum of two) integrations
	Serial dilution	Five-fold dilution of sample digestate	1 per batch	For samples >50x instrument detection limit, dilutions must agree within 10%
	Interference check	Interference check sample A/AB analysis	Beginning of sequence	1. <2x reporting limit for applicable analytes 2. Recovery ±20% (as applicable)
	Continuing calibration	Continuing calibration verification	Every 10 samples and at the end of the sequence	±10% difference with relative standard deviation <5% from replicate (minimum of two) integrations
Mercury	Initial calibration	Calibration blank and five standards	Daily before analysis	r ≥0.995
	Calibration check	Instrument calibration verification	Following initial calibration	±10% difference
	Continuing calibration	Continuing calibration verification	Every 10 samples and at the end of the sequence	±20% difference

ED_002099_0000079-00207

TABLE 7-2 (CONTINUED)
SUMMARY OF ANALYTICAL EQUIPMENT CALIBRATION AND QUALITY CONTROL CHECKS

PARAMETER	QUALITY CONTROL CHECK	METHOD OF DETERMINATION	FREQUENCY	ACCEPTANCE CRITERIA
Dioxins and furans	Initial calibration	Five high resolution concentration calibration solutions	Prior to sample analysis	1. Mean relative response factor for unlabeled standards: <20% relative standard deviation 2. Mean relative response factor for labeled reference compounds: <30% relative standard deviation
	Calibration verification	Midlevel standard	At the beginning and end of each 12-hour shift	1. Response factors within ±20% of the initial calibration mean relative response factor for unlabeled standards in beginning standard 2. Response factors within ±25% of the initial calibration mean relative response factor for unlabeled standards in ending standard 3. Response factors within ±30% of the initial calibration mean relative response factor for labeled standards in beginning standard 4. Response factors within ±35% of the initial calibration mean relative response factor for unlabeled standards in ending standard
	Retention time window verification and gas chromatograph column performance	Monitor retention times, verify gas chromatograph column performance	At the beginning of each 12-hour shift	Compliance with Section 9.6.2 of SW-846 Method 8290A
Chlorobenzene	Initial calibration	Five levels, as per target list	Prior to sample analysis	1. Compounds with linear response factor, relative standard deviation of initial calibration ≤15% 2. Compounds with non-linear response factor, correlation coefficient or coefficient of determination ≥ 0.99 3. Relative response factors for system performance check compounds: ≥0.10 for chloromethane, 1,1-dichloroethane, and bromoform, ≥0.30 for 1,1,2,2-tetrachloroethane and chlorobenzene 4. Relative response factor of calibration check compounds: ±30% relative standard deviation

ED_002099_0000079-00208

TABLE 7-2 (CONTINUED)
SUMMARY OF ANALYTICAL EQUIPMENT CALIBRATION AND QUALITY CONTROL CHECKS

PARAMETER	QUALITY CONTROL CHECK	METHOD OF DETERMINATION	FREQUENCY	ACCEPTANCE CRITERIA
Chlorobenzene	Continuing calibration	Continuing calibration verification	Every 12 hours following tune as required	1. Response factor for system performance check compounds: Same as initial calibration 2. Percent difference of calibration check compounds relative response factor from initial calibration: ≤20%
	Consistency in chromatography	Internal standards	Every sample and standard	1. Retention time relative to daily standard: ≤30 seconds 2. Area counts relative to daily standard: 50-200%

7.3 PREVENTATIVE MAINTENANCE

To ensure the quality and reliability of the data obtained, preventative maintenance is performed on the sampling and analytical equipment. The following sections outline those procedures.

7.3.1 SAMPLING EQUIPMENT

The potential impact of equipment malfunction on data completeness is minimized through two complimentary approaches. An in-house equipment maintenance program is part of routine operations. The maintenance program's strengths include:

- Availability of personnel experienced in the details of equipment maintenance and fabrication;
- Maintenance of an adequate spare parts inventory; and
- Availability of tools and specialized equipment.

For field equipment, preventive maintenance schedules are developed from historical data. Table 7-3 gives specific maintenance procedures for field equipment. Maintenance schedules for major analytical instruments (*e.g.*, balances, gas chromatographs) are based on manufacturer's recommendations.

TABLE 7-3
MAINTENANCE ACTIVITIES FOR FIELD SAMPLING EQUIPMENT

EQUIPMENT	MAINTENANCE ACTIVITIES	SPARE PARTS
Vacuum system	Before and after field program: 1. Check oil and oiler jar 2. Leak check 3. Verify vacuum gauge is functional Yearly or as needed: 1. Replace valves in pump	Spare fluid
Inclined manometer	Before and after each field program: 1. Leak check 2. Check fluid for discoloration or visible matter Yearly or as needed: 1. Disassemble and clean 2. Replace fluid	Spare fluid, o-rings
Dry gas meter	Before and after each field program: 1. Check meter dial for erratic rotation Every 3 months: 1. Remove panels and check for excessive oil or corrosion 2. Disassemble and clean	None
Nozzles	Before and after each test: 1. Verify no dents, corrosion or other damage 2. Glass or quartz nozzles, check for chips and cracks	Spare nozzles
Diaphragm pump	Before and after each test: 1. Leak check, change diaphragm if needed	None
Miscellaneous	Check for availability of spare parts	Fuses, fittings, thermocouples, thermocouple wire, variable transformers.

7.3.2 ANALYTICAL EQUIPMENT

In addition to including QC checks in the analysis of test program samples, the laboratories also perform regular inspection and maintenance of the laboratory equipment. Table 7-4 lists some of the routine maintenance procedures associated with the analytical equipment to be used in this test program.

TABLE 7-4
MAINTENANCE ACTIVITIES FOR ANALYTICAL EQUIPMENT

PARAMETER	EQUIPMENT	MAINTENANCE PROCEDURES
Hydrogen chloride and chlorine	Ion chromatograph	– Check pump and gas pressure – Check all lines for crimping leaks and discoloration
Arsenic, beryllium, cadmium, chromium, and lead	Inductively coupled plasma	– Check gases, vacuum pump and cooling water, nebulizer, capillary tubing, peristaltic pump, high voltage switch, exhaust screens and torch, glassware and aerosol injector tube – Clean plasma torch, nebulizer, and filters – Replace pump tubing – Clean and lubricate sampler arm – Clean power unit and coolant water filters
Mercury	Atomic absorption analyzer	– Clean optic cell and tubing – Change stannous chloride and related tubing – Adjust/change mercury lamp
Dioxins and furans	High resolution gas chromatograph/high resolution mass spectroscopy	– Change rotary pump oil – Clean beam center/focus stack and outer source – Clean ion volume – Change source slit
Chlorobenzene	Gas chromatograph/ mass spectroscopy	– Redo tune – Replace filament(s)

ED_002099_0000079-00211

8.0 DATA REDUCTION, VALIDATION AND REPORTING

This section presents the approaches to be used to reduce, validate, and report measurement data. With respect to the CPT, a quality team of companies and laboratories will be working together to ensure the success of this project. The team will make certain that:

- All raw data packages are paginated and assigned a unique project number. Each project number will reflect the type of analyses performed (*i.e.*, organic, inorganic, waste feed, air emissions).
- The data packages contain a case narrative, sample description information, sample receipt information, COC documentation, and summary report. All associated QA/QC results, run/batch data, instrument calibration data, sample extraction/preparation logs, and chromatograms, *etc.* will be included in the final laboratory report. The report will also contain a list of validation qualifiers.
- These data are assigned to a specific appendix in the report for easy reference and data review.

8.1 DATA REDUCTION

The methods referenced in this QAPP for field measurements and lab analyses are standard methods and are routinely used for such measurements and analysis. Data reduction procedures will follow the specific calculations presented in the reference methods.

Extreme care will be exercised to ensure hand recorded data are written accurately and legibly. Additionally, prepared and formatted data recording forms will be required for all data collection. This is an important aid to verify that all necessary data items are recorded. The collected field and laboratory data will be reviewed for correctness and completeness.

The stack sampling contractor will reduce and validate all of the sampling and field measurement data that are collected. The sampling data will include flow measurements, calibrations, *etc.* The laboratory will reduce all analytical results prior to submission. The analytical data will be used to determine concentrations and emission rates of the compounds of interest. The manner in which the derived quantities will be reported is discussed in Section 8.3.

8.2 DATA VALIDATION

Validation demonstrates that a process, item, data set, or service satisfies the requirements defined by the user. For this program, review and evaluation of documents and records will be performed to assess the validity of samples collected, methodologies used, and data reported. This review comprises three parts: review of field documentation, review of laboratory data reports, and evaluation of data quality. The Quality Assurance Officer has ultimate responsibility for validating all data for this project.

The sampling and analytical methods for this program have been selected because of their accepted validity for these types of applications. Adherence to the accepted methods, as described in this QAPP

and the laboratory's LELAP-approved SOPs, is the first criterion for validation. The effectiveness of the analytical methods as applied to this particular study will be evaluated based on project-specific quality indicators, such as audit samples, replicate samples, and matrix and surrogate spikes.

8.2.1 Review of Field Documentation

Sample validation is intended to ensure that the samples collected are representative of the population under study. Criteria for acceptance include positive identification, documentation of sample shipment, preservation, and storage, and documentation demonstrating adherence to sample collection protocols and QC checks. As part of the review of field documentation, field data sheets and master logbooks will be checked for completeness, correctness, and consistency.

8.2.2 Laboratory Review of Data

The representative from each laboratory will approve all data results. The representative's signature will be included in the report. This signature will indicate that all QA/QC expectations were met. If expectations were not met, the discrepancies will be explained in the laboratory case narrative. The laboratory representatives will discuss the QA/QC issues and include the impact of these issues on the data results in the case narrative.

Laboratory raw data packages will include the following information:

- A table of contents for the raw data; and
- Numbered pages, correlating to the table of contents.

8.2.3 Evaluation of Data Quality

The project team will review and evaluate the reported data. Data quality will be assessed. Review of the laboratory reports will result in an evaluation of the following parameters:

- Holding time for samples from date of collection to date of preparation and/or analysis;
- Sample storage conditions during the holding period prior to analysis;
- Tuning and calibration of instruments;
- PARCC parameter results and acceptance criteria;
- Blank sample analysis results; and
- Performance evaluation (audit) sample results, if applicable.

8.3 Data Reporting

The CPT report will be submitted to LDEQ within 90 days of completing the testing, or an extension will be requested. Both electronic and hard copies of the report will be provided.

All data will be reported in the appropriate units as applicable to the sample stream and the method of analysis. Waste feed analytical results will be reported as concentrations by weight. Emission results will be reported on a concentration basis to allow comparison to the emission standards.

Specific procedures will be followed when reporting test results. This section describes the conventions for detection limits, blank correction, and the use of significant figures.

8.3.1 Management of Non-Detects

There are several specific situations that will arise in which calculations will need to be performed, but the analytical results are non-detects (at some level). Contracted laboratories are requested to achieve the lowest detection limits possible for each of the methods included in this QAPP. All detection limits shall be defined in the laboratory reports. No data results shall be reported as "ND" without a defined numerical value provided as the detection limit.

The procedures for handling non-detects will be communicated to each laboratory and the stack sampling contractor. When dealing with detection limits and non-detect data, the following guidelines will be used:

- Reporting limits (RLs) or method detection limits (MDLs) will be used to report waste analytical data;
- RLs, MDLs, reliable detection limits (RDLs), or estimated detection limits (EDLs) will be used to report emissions analytical data, as appropriate;
- For D/F emissions results, the SW-846 Method 0023A train will be operated for a minimum of 180 minutes during each test run, and all non-detects will be assumed to be present at zero concentration, in accordance with 40 CFR § 63.1208(b)(1)(iii);
- For DRE calculations, a non-detect in waste feed will be treated as a zero, and a non-detect in the emissions will be treated as the RL (this will provide for the most conservative estimate of emission rates); and
- Any results that use non-detects will be reported as maxima (*i.e.*, with a less-than sign – "<").

8.3.2 Rounding and Significant Figures

Observational results will be made with as many significant figures as possible. Rounding will be deferred until all resultant calculations have been made. The following rules will be applied in rounding data:

- When the digit after the one to be rounded is less than five, the one to be rounded is left unchanged; and
- When the digit after the one to be rounded is greater than or equal to five, the one to be rounded is increased by one.

Intermediate results will be presented in the final report at an appropriate level of significance (*i.e.*, rounded), although the derived, or resultant, calculations will be based on unrounded intermediate data. Consequently, it may not be possible to precisely reconstruct the resultant calculations on any particular table from the rounded intermediate results due to rounding errors.

9.0 QUALITY ASSURANCE REPORTS

Activities affecting data quality will be reviewed by the project team daily in the field, and as appropriate during non-field efforts. This will allow assessment of the overall effectiveness of the QAPP. These reviews will include the following:

- Summary of key QA activities, stressing measures that are being taken to ensure adherence to the QAPP;
- Description of problems observed that may impact data quality and corrective actions taken;
- Status of sample shipment and integrity at time of receipt and progress of sample analysis;
- Assessment of the QC data gathered over that time period;
- Any changes in QA organizational activities and personnel; and
- Results of internal or external assessments and the plan for correcting identified deficiencies, if any.

The testing program will have multiple tiers of QA/QC reviews. The specific laboratory performing the analysis will review the data for which they are responsible, and the laboratory project manager will sign the analytical data reports. Any QA/QC anomalies will be discussed in the case narrative. The Project Coordinator and Quality Assurance Officer will also review the laboratory data package to discuss how the QA/QC anomalies may impact the emissions calculations. Any data that is determined to be invalid will be stated in the final report, and the impact of the invalid data on the test program will be assessed. Through this multiple tier process, all stages of the testing program will be tracked, monitored, reviewed, and documented.

10.0 REFERENCES

ASTM. *Annual Book of ASTM Standards*, latest annual edition.

USEPA. November 1986 and updates. *Test Methods for Evaluating Solid Wastes, Physical/Chemical Methods*. USEPA 530/ SW-846.

USEPA. 1994. *Quality Assurance Handbook for Air Pollution Measurement Systems, Volume III, Stationary Source Specific Methods*. Office of Research and Development. EPA/600/R-94/038C.

USEPA. February 1991. *Preparation Aids for the Development of Category I Quality Assurance Project Plan*. Office of Research and Development. EPA/600/8-91/003.

USEPA. 1990. *Handbook: QA/QC Procedures for Hazardous Waste Incineration*. Office of Research and Development. EPA/625/6-89/023.

USEPA. *Methods Manual for Compliance With the BIF Regulations*, Appendix IX, 40 CFR Part 266.

USEPA. National Emission Standards for Hazardous Air Pollutants from Hazardous Waste Combustors, 40 CFR Part 63, Subpart EEE, September 30, 1999, and as amended through October 28, 2008.

USEPA. New Source Performance Standards, Test Methods and Procedures, Appendix A, 40 CFR Part 60.

Attachment A:
PROJECT TEAM CONTACT INFORMATION

Performance Test Manager	Ben Dabadie Chemical Waste Management, Inc. Lake Charles Facility 7170 John Brannon Road Sulphur, LA 70665 337-583-3676 bdabadie@wm.com
Project Coordinator	S. Heather McHale, P.E. Coterie Environmental LLC 1150 First Ave, Suite 501 King of Prussia, PA 19406 610-406-2214 heather.mchale@coterie-env.com
Stack Test Director	To be determined
Waste Spiking Director	To be determined
Quality Assurance Officer	Meghan Skemp Coterie Environmental LLC 1150 First Ave, Suite 501 King of Prussia, PA 19406 281-201-7818 meghan.skemp@coterie-env.com
Laboratory	To be determined

Attachment B:
PROJECT TEAM RESUMES

BENJAMIN C. DABADIE

1800 Foster St.
Lake Charles, La 70601 **bdabadie@gmail.com** **(337) 583-3676**

SUMMARY

Currently employed by Waste Management as an Environmental Protection Manager at the Chemical Waste Management – Lake Charles Facility. Have served in multiple capacities throughout career in the solid and hazardous waste industry. Existing and prior roles have included responsibilities related to landfill operations, capital project management and budgeting, and environmental permitting and monitoring.

PROFESSIONAL EXPERIENCE

WASTE MANAGEMENT – ENVIRONMENTAL PROTECTION MANAGER **AUG 2013 – PRESENT**

Environmental Protection Manager at the Chemical Waste Management – Lake Charles RCRA Hazardous Waste Transfer, Storage and Disposal Facility located in Carlyss, LA. Job specific functions include employee training, Agency communication, oversight of the facility's environmental monitoring and compliance inspection programs, and development, implementation and management of the systems used to ensure compliance with all RCRA, TSCA, CERCLA, Clean Air and Clean Water requirements.

WASTE MANAGEMENT – LANDFILL OPERATIONS MANAGER **NOV 2011 – AUG 2013**

Landfill Operations Manager at the Waste Management Chastang Landfill located in Mt. Vernon, AL. Position required arrangement of customer and employee schedules to ensure smooth operations. Additional job functions included conducting regular safety meetings, developing innovative methods for reducing operational costs, preparing and accurately measuring site budgets, while acting as company liaison for local community relations.

REPUBLIC SERVICES – ENVIRONMENTAL SPECIALIST **NOV 2008 – NOV 2011**

Served as the Gulf Coast Area Environmental Specialist for Republic Services. Provided local and federal environmental guidance to various landfills, transfer stations and waste hauling divisions throughout the states of LA, MS, AL and FL. Initiated and assisted with permit renewals and modifications and effectively managed several environmental technicians. Completed the installation of a first of its kind phytoremediation landfill cap, utilizing landfill leachate.

ED_002099_0000079-00220

EDUCATION and EXTRACURRICULAR INVOLVEMENT

University of Louisiana at Lafayette
Bachelor of Science
Major: Environmental and Sustainable Resources

Successful completion of the SWLA Economic Alliance –
Leadership Southwest Louisiana
2015 Graduating Class

Current Member of the Louisiana SW Chapter
Air and Waste Management Association
Member ID: 1167936

Volunteer
2016 Louisiana Flood Relief (United Way)

ED_002099_0000079-00221

Coterie
ENVIRONMENTAL

S. HEATHER MCHALE, P.E.
PRINCIPAL

Heather has over 20 years experience in the permitting of combustion and incineration sources. She is a recognized expert in National Emission Standards for Hazardous Air Pollutants (NESHAP) regulations, including the Hazardous Waste Combustor (HWC) NESHAP and the Industrial, Commercial, and Institutional Boilers and Process Heaters (ICIB/PH) NESHAP. She also has extensive experience in Resource Conservation and Recovery Act (RCRA) permitting. Heather has assisted numerous facilities in their efforts to comply with these regulations.

Expertise

- HWC NESHAP compliance
- ICIB/PH NESHAP compliance
- Commercial and Industrial Solid Waste Incineration (CISWI) compliance
- RCRA permitting and trial burns
- Multi-pathway risk assessment
- Combustion system and air pollution control design and operation

Project Experience

HWC NESHAP Compliance. Multiple Clients and Locations. Assisted numerous clients through the various stages of HWC NESHAP compliance. Projects typically begin with a comprehensive compliance evaluation or "gap analysis." The gap analysis identifies the activities that would be necessary to bring the unit into compliance with the regulations. Developed Notifications of Intent to Comply (NICs) and presented at public meetings. Developed comprehensive performance test (CPT) plans, continuous monitoring system (CMS) performance evaluation test (PET) plans, and quality assurance project plans (QAPPs) for submittal to regulatory agencies for review and approval. Assisted with negotiations to obtain approval of plans. Provided oversight and coordination for the CPTs, typically acting as the main contact for regulators, stack testing contractors, waste spiking contractors, and laboratories. Prepared CPT reports and Notifications of Compliance, assisting with negotiations to obtain final "finding of compliance" from the regulatory agencies. Prepared the required operating plans for each unit, including feedstream analysis plans, startup, shutdown, and malfunction (SSM) plans, operation and maintenance plans, and CMS performance evaluation plan. Developed operator training and certification programs and provided onsite training.

RCRA Permitting. Multiple Clients and Locations. Assisted numerous clients with RCRA permitting of incinerators and hazardous waste-fired boilers and furnaces. Provided on-site technical assistance for units during startup/shakedown periods. Developed RCRA trial burn

plans and risk burn plans submittal to regulatory agencies for review and approval. Assisted with negotiations to obtain approval of plans. Provided oversight and coordination for the test burns, typically acting as the main contact for regulators, stack testing contractors, waste spiking contractors, and laboratories. Prepared trial burn and risk burn reports, assisting with negotiations for final permit conditions. Developed Part B Permit applications. Developed site-specific multipathway risk assessment protocols and reports, in accordance with USEPA guidance.

ICIB/PH NESHAP Compliance. Multiple Clients and Locations. Assisted numerous clients through the various stages of ICIB/PH NESHAP compliance, before the court vacatur of the regulation. Performed detailed gap analyses to determine the activities that would be necessary to bring the units into compliance with the new regulations. Gap analyses included applicability determinations, evaluations of available emission data to determine compliance with emission standards, and reviews of the monitoring, reporting, and record keeping requirements. If necessary, performed pollution control feasibility studies. Provided recommendations on the most appropriate compliance options and strategies. Developed performance test plans and provided oversight during preliminary stack testing. Prepared the required operating plans for each unit, including fuel analysis plans, SSM plans, and site-specific monitoring plans.

Combustion and Air Pollution Control System Design and Engineering. Multiple Clients and Locations. Projects included air pollution control conceptual designs for new systems and retrofits. Prepared engineering reviews and feasibility studies, evaluating possible equipment designs and providing recommendations for new equipment and system modifications. Prepared engineering specifications for combustion and air pollution control equipment. Developed proprietary heat and material balance programs to evaluate design conditions and assist in sizing of equipment.

Computer Program Development. Developed several computer programs for the prediction of incineration and air pollution control system performance. Developed the computer programs used to size incineration systems, to determine emissions from systems, and to establish operating parameters for systems. Developed a computer program for emission inventories for Reasonable Available Control Technology and Title V projects. Developed computer program for multipathway risk assessment calculations, following the procedures of USEPA guidance document, *Human Health Risk Assessment Protocol for Hazardous Waste Combustion Facilities*.

Title V Permitting. Multiple Clients and Locations. Prepared Title V permit applications for facilities in Delaware, Illinois, Kentucky, New Jersey, New York, Pennsylvania, and Wisconsin. Performed site surveys to develop emission inventories and to collect existing facility design, permitting, and operating data. Conducted database and literature searches to determine emission and control efficiency factors. Calculated actual and potential emissions for each source. Prepared a detailed description of facility operations and each emission source, including process flow diagrams. Determined the applicable regulatory requirements for the facilities, and performed compliance audits. Completed all the required state permit forms for the facility, and for each source, stack, piece of control equipment, and emission/process monitor.

ED_002099_0000079-00223

Education, Training, and Registrations

- B.S., Chemical Engineering, Penn State University, 1988
- Registered Professional Engineer - Pennsylvania

Affiliations

- Air and Waste Management Association
- Program Advisory Committee for the International Conference on Incineration and Thermal Treatment Technologies (IT3)

Publications and Presentations

Gehring, M. E., and McHale, S. H. 2009. "The Curious Case of the CPT." Presented at the 28th International Conference on Incineration and Thermal Treatment Technologies. May 2009. Cincinnati, Ohio.

Gehring, M. E., and McHale, S. H. 2008. "Getting Out of HWC MACT – Is it Worth It?" Presented at the 27th International Conference on Incineration and Thermal Treatment Technologies. May 2008. Montreal, Quebec, Canada.

Gehring, M. E., and McHale, S. H. 2007. "HWC MACT Phase II Impacts - An Industry Survey." Presented at the 26th International Conference on Incineration and Thermal Treatment Technologies. May 2007. Phoenix, Arizona.

Gehring, M. E., and McHale, S. H. 2006. "So You Think You're In Compliance." Presented at the 25th International Conference on Incineration and Thermal Treatment Technologies. May 2006. Savannah, Georgia.

Gehring, M. E., McHale, S. H., and Whiteside, B. N. 2004. "EHS Management Systems and HWC MACT Compliance." Presented at the 23rd International Conference on Incineration and Thermal Treatment Technologies. May 2004. Phoenix, Arizona.

McHale, S. H. and Gehring, M. E. 2003. "HWC MACT from NIC to NOC - An Industry Survey." Presented at the 22nd International Conference on Incineration and Thermal Treatment Technologies. May 2003. Orlando, Florida.

McHale, S. H. and Gehring, M. E. 2002. "Workshop: Startup, Shutdown, and Malfunction Plans for Hazardous Waste Combustors." Presented at the 21st International Conference on Incineration and Thermal Treatment Technologies. May 2002. New Orleans, Louisiana.

McHale, S. H. and Budin, M. "Comparative Analysis: RCRA Trial Burn & HWC MACT Comprehensive Performance Test." Presented at the 2002 AWMA Hazardous Waste Combustor Specialty Conference. April 2002. St. Louis, Missouri.

Tidona, R. J. and McHale, S. H. "The HWC MACT Rule: What Does It Mean To Me?" Presented at the 16th International Conference on Incineration and Thermal Treatment Technologies. May 1997. Oakland, California.

Contributing author on "Introduction to Hazardous Waste Incineration," Second Edition, Section 3: Standards and Regulations, published in 2000.

Coterie
ENVIRONMENTAL

MEGHAN H. SKEMP
SENIOR PROJECT ENGINEER

Meghan has over 10 years of experience in combustion engineering, air pollution permitting, and environmental regulatory compliance and brings extensive hands-on perspective to solving challenging environmental problems. Her experience spans a multitude of environmental compliance issues and regulations in various manufacturing sectors. Working in the air pollution control industry has required Meghan to gain a strong understanding of multiple environmental regulations. Meghan also has extensive experience with general environmental compliance issues and reporting requirements in the majority of states.

Expertise

- HWC NESHAP compliance
- Subpart JJJJ NSPS and Subpart ZZZZ NESHAP compliance
- General air/environmental permitting and reporting
- Environmental Management Systems development and implementation

Project Experience

HWC NESHAP Compliance. Chemical and Explosives/Ammunition Manufacturing Clients in Multiple Locations. Provided assistance to a number of hazardous waste combustion facilities. Projects duties included assisting with quality assurance/quality control (QA/QC) of stack test data and assisting preparation of test plans and reports.

JJJJ NSPS and ZZZZ NESHAP Compliance. Natural Gas Compressor Stations in Multiple Locations. Assisted natural gas compressor stations with determining applicability and compliance requirements for Subpart JJJJ – Standards of Performance for Stationary Spark Ignition Internal Combustion Engines and Subpart ZZZZ – National Emissions Standards for Hazardous Air Pollutants for Stationary Reciprocating Internal Combustion Engines. Assisted facilities in determining compliance status and developing a comprehensive compliance plan for each NSPS/NESHAP in addition to their air permit requirements. Provided guidance and assisted in developing training presentations and regulatory compliance procedures. Prepared and submitted required NESHAP reports.

General Permitting and Reporting. Chemical Manufacturers, Tire Manufacturers, Automotive Industry, and Oil and Gas Industry facilities in Multiple Locations. Assisted clients with developing plan approvals, requests for determination, permits to construct, national pollutant discharge elimination system (NPDES) permits, storm water permits, Title V permits, state operating permits, and permit by rule documentation. Other projects included the preparation and submittal of annual emission inventories, preparation and submittal of deviation and

ED_002099_0000079-00226

compliance reports, development of spill prevention, control, and countermeasure (SPCC) plans, storm water pollution prevention (SWPPP) plans, and providing general compliance assistance.

Environmental Compliance Management System Development and Implementation. Automotive industry, Tire Manufacturing industry and Midstream Oil industry facilities in Multiple Locations. Assisted with the development of environmental compliance management systems. Worked with clients in the development of procedures for environmental compliance tasks. Also, assisted in the environmental risk assessments and development of the key controls to ensure 100 percent compliance with all facility permits. Completed multiple facility audits to ensure compliance with all facility permits and environmental regulations. Was responsible for piloting the management systems and incorporating facility comments into the final products.

Education, Training, and Registrations

- B.E., Chemical Engineering, Vanderbilt University, 2006
- M.E., Environmental Engineering, Vanderbilt University, 2009
- Certified Engineer in Training – Tennessee
- 40-Hour HAZWOPER Certified

Affiliations

- Air and Waste Management Association

ED_002099_0000079-00227

Appendix B:

CONTINUOUS MONITORING SYSTEMS PERFORMANCE EVALUATION TEST PLAN

WASTE MANAGEMENT

CHEMICAL WASTE MANAGEMENT, INC.

LAKE CHARLES FACILITY

HAZARDOUS WASTE OPERATING PERMIT EPA ID NO. LAD 000 777 201 AGENCY INTEREST NO. 742

CONTINUOUS MONITORING SYSTEMS PERFORMANCE EVALUATION TEST PLAN FOR THERMAL DESORPTION UNIT

NOVEMBER 2017

PREPARED BY:

pivotal engineering

Coterie ENVIRONMENTAL

TABLE OF CONTENTS

1.0 Introduction 1-1
1.1 Facility Overview 1-1
1.2 Unit Overview 1-2
1.3 Regulatory Overview 1-2
1.4 Continuous Process Monitoring Systems Overview 1-2
1.5 Continuous Emissions Monitoring Systems Overview 1-3
1.6 Plan Purpose and Scope 1-3
1.7 Document Revision History 1-4
2.0 Internal Quality Assurance Program 2-1
2.1 Installation Checks 2-1
2.2 Operational Checks 2-1
2.3 Calibration Checks 2-1
2.4 Internal Quality Assurance Program Schedule 2-2
3.0 External Quality Assurance program 3-1
3.1 Test Personnel 3-1
3.2 Reduction of Test Data 3-1
3.3 Validation of Test Results 3-1
3.4 Reporting of Test Results 3-1

LIST OF TABLES

Table 1-1 Continuous Process Monitoring Systems 1-3
Table 1-2 Document Revision History 1-4

LIST OF ATTACHMENTS

Attachment A: Example Continuous Monitoring Systems Performance Evaluation Test Forms

ED_002099_0000079-00230

1.0 INTRODUCTION

This continuous monitoring systems (CMS) performance evaluation test (PET) plan is being submitted by Chemical Waste Management, Inc., (CWM) for the Thermal Desorption Unit (TDU) to be operated at the Lake Charles Facility. The TDU is subject to the Resource Conservation and Recovery Act (RCRA) standards codified in Title 40 Code of Federal Regulations (CFR) Part 264 Subpart X and Louisiana Administrative Code (LAC) Title 33 Part V Chapter 32. The applicable operating requirements for the TDU are specified in Section V.G of Hazardous Waste Operating Permit No. LAD000777201-0P-RN-MO-I.

This plan describes the CMS PET that CWM will conduct to demonstrate that the CMS associated with the TDU are operating in compliance with the standards presented in the permit. It is being submitted in accordance with Condition V.G.10.b.11 of the permit as part of the requirements for the comprehensive performance test (CPT) to demonstrate compliance with all applicable performance standards.

1.1 FACILITY OVERVIEW

The CWM Lake Charles Facility is a commercial hazardous waste treatment, storage, and disposal facility located on a 390-acre tract near Carlyss, Louisiana. John Brannon Road divides the facility into two parts: 270 acres to the west and 120 acres to the east. Incoming waste is currently treated as required and then disposed in Hazardous Waste Landfill Cell 8, located on the west side of John Brannon Road, adjacent to the other operational areas of the facility. CWM has added two new technologies to the current operations at the Lake Charles Facility. These new technologies offer CWM opportunities to treat waste and recover oil for resale. The two new systems consist of Oil Recovery Units and the TDU.

The street address of the CWM Lake Charles Facility is:

Chemical Waste Management, Inc.
Lake Charles Facility
7170 John Brannon Road
Carlyss, Calcasieu Parish, Louisiana 70665

All correspondence should be directed to the following facility contact:

Benjamin Dabadie
Environmental Manager
Chemical Waste Management, Inc.
Lake Charles Facility
7170 John Brannon Road
Sulphur, Louisiana 70665

Phone: 337-583-3676
Email: bdabadie@wm.com

1.2 Unit Overview

The TDU is designed to remediate organic hydrocarbon waste streams by thermally volatilizing their hydrocarbon constituents such that they are separated from the solid fraction, processed, and captured as a recovered organic material. The TDU consists of a solids feed system, an indirectly heated rotary drum, a Vapor Recovery Unit (VRU), and a Thermal Oxidizer Unit (TOU). Gases exit the TOU and flow through a water quench, a venturi scrubber, and a packed bed scrubber. An induced draft (ID) fan downstream of the packed bed scrubber pulls the gases through the TOU and quench/scrubber system and pushes them out the stack.

1.3 Regulatory Overview

The TDU is a thermal treatment unit, but it does not meet the definitions of an incinerator, boiler, or industrial furnace provided in 40 CFR § 260.10. The TDU does not use controlled flame combustion. Therefore, this unit is subject to 40 CFR Part 264 Subpart X and LAC 33:V.Chapter 32. 40 CFR § 264.601 and LAC 33:V.3203 require that Subpart X permit terms and provisions include those requirements of 40 CFR Part 264 Subparts I through O and Subparts AA through CC, 40 CFR Part 270, 40 CFR Part 63 Subpart EEE, and 40 CFR Part 146 that are appropriate for the miscellaneous unit being permitted. The Louisiana Department of Environmental Quality (LDEQ) has determined that some of the performance standards of 40 CFR Part 63 Subpart EEE, Hazardous Waste Combustor National Emission Standards for Hazardous Air Pollutants (HWC NESHAP), are appropriate for the TDU.

The permit requires that CWM use CMS to ensure that the TDU is operating in compliance with the performance standards at all times. These CMS are comprised of continuous process monitoring systems (CPMS) and continuous emissions monitoring systems (CEMS). The performance of the CMS must be evaluated in conjunction with the CPT. This evaluation is referred to as the CMS PET. CWM must document the protocol for the CMS PET in a CMS PET plan and must submit the plan for review and approval along with the CPT plan.

1.4 Continuous Process Monitoring Systems Overview

Various CPMS are required for the TDU to document compliance with the required OPLs. These monitors sample regulated operating parameters without interruption and evaluate the detector's response at least once every 15 seconds. The distributed control system (DCS) collects the data, calculates and records one-minute average (OMA) values for each required operating parameter, and calculates and records the appropriate rolling averages. Table 1-1 provides a description of each CPMS.

TABLE 1-1
CONTINUOUS PROCESS MONITORING SYSTEMS

MEASURED PARAMETER	INSTRUMENT DESCRIPTION
Hazardous waste feed rate	Flow meter
Rotary drum pressure	Pressure transmitter
Rotary drum temperature	Thermocouple and temperature transmitter
Thermal oxidizer unit temperature	Thermocouple and temperature transmitter
Flue gas flow rate	Flow meter
Venturi scrubber pressure drop	Differential pressure transmitter
Packed bed scrubber liquid flow rate	Flow meter
Paced bed scrubber liquid pH	pH transmitter and electrode

1.5 CONTINUOUS EMISSIONS MONITORING SYSTEMS OVERVIEW

In addition to monitoring process parameters, CWM is required to continuously monitor the carbon monoxide (CO) concentration in the stack gas to demonstrate compliance with the CO performance standard. CWM must also use an oxygen CEMS to continuously correct the reported CO concentration to seven percent oxygen. These analyzers must comply with the quality assurance (QA) procedures for CEMS contained in 40 CFR Part 266 Appendix IX.

CWM will utilize a non-dispersive infrared analyzer for CO. The analyzer will be configured with two spans: a zero to 200 parts per million by volume dry basis (ppmv dry) low-level span and zero to 3,000 ppmv high-level span. CWM will continuously correct these CO concentration measurements to seven percent oxygen. CWM will perform this correction with measurements of the stack gas oxygen concentration that will be collected by a paramagnetic analyzer. The analyzer will be configured with a single span of zero to 25 percent oxygen by volume on a dry basis.

1.6 PLAN PURPOSE AND SCOPE

With this CMS PET, CWM will demonstrate that the CMS associated with the TDU are operating in compliance with the permit requirements. More specifically, CWM will demonstrate that all CMS are installed such that they can obtain representative measurements of the process or emissions parameter. This will include verification of proper installation, operation, and calibration of each CMS used to demonstrate compliance with the permit.

This CMS PET plan includes both an internal and external QA program. The internal QA program specifies the procedures that will be used to verify correct installation, calibration, and operation of each CMS device prior to the CPT. The external QA program provides information on data validation and documentation measures for the CMS PET.

The remaining sections of this plan are organized as follows:

- Section 2 provides a summary of the CMS performance evaluations that will be performed (internal QA program) and presents a schedule for the CMS PET;
- Section 3 provides information on the data validation and reporting procedures (external QA program); and
- Attachment A provides detailed procedures and recording forms for the CMS PET.

1.7 Document Revision History

The original version of this plan was submitted in November 2017. The nature and date of any future revisions will be summarized in Table 1-2.

Table 1-2
Document Revision History

Revision	Date	Description of Changes
0	November 2017	Original submittal

ED_002099_0000079-00234

2.0 INTERNAL QUALITY ASSURANCE PROGRAM

This internal QA program specifies the procedures that will be used to conduct the CMS PET. This section provides an overview of the required program and the anticipated test schedule. Details on the internal QA program activities are provided on the CMS PET checklists in Attachment A.

2.1 INSTALLATION CHECKS

During the CMS PET, installation checks will be performed on each of the permit-required CMS to verify that they are installed in accordance with manufacturer recommendations and plant internal standards. The checklists in Attachment A provide the installation checks that will be performed for each CMS. Examples of the installation checks that will be performed include verifying proper orientation of the CMS, checking the electrical wiring, and looking for evidence of corrosion or excessive buildup.

2.2 OPERATIONAL CHECKS

Operational checks will also be performed on each of the CMS to verify that they are operating properly. The operational checks specific to each CMS are detailed on the CMS PET checklists in Attachment A. These operational checks will vary depending upon the diagnostic capabilities of the instrument. For those CMS equipped with internal diagnostic test routines, CWM will activate the routine, if necessary, and will review the instrument display for error codes after the diagnostic test is complete. Absent such a diagnostic routine, CWM will simply observe the CMS during normal unit operation and will confirm that changes are registered with known changes in process conditions.

For the CEMS, a relative accuracy test audit (RATA) will be conducted following the RATA procedures described in 40 CFR Part 266 Appendix IX for all analyzers. Concurrent with the RATA, the facility will conduct a seven-day drift test, which is intended to demonstrate the stability of the CEMS calibration over time.

2.3 CALIBRATION CHECKS

In addition to verifying proper installation and operation of each CMS, CWM will also check the calibration of each CMS during the CMS PET. CWM will perform complete calibrations of the CMS if the calibration checks indicate the potential for an unacceptable amount of bias in the instrument readings. The checklists in Attachment A provide information on the instrument-specific calibration procedures.

For the CEMS, CWM will assess the daily calibration and zero drift of each CEMS. During the daily calibration check, the stack gas sample stream is temporarily turned off, and calibration gases are injected into each analyzer. A zero level calibration gas is used to test the baseline response of each CEMS. A span gas is then used to test the response of the instrument at the high end of its range. This assessment is performed automatically each day by the CEMS and will continue during the CMS PET.

Should any adjustments to the CEMS be required, they will be performed manually by CWM following site-specific procedures.

2.4 Internal Quality Assurance Program Schedule

The activities designated for the internal QA program will require careful planning and substantial time to complete. To ensure completion prior to the CPT, CWM will perform the CMS PET in the months prior to the CPT. All tasks will be initiated no less than two weeks prior to the CPT to allow time for corrective actions to be implemented in the event that any installation, calibration, or operation check is not successful.

3.0 EXTERNAL QUALITY ASSURANCE PROGRAM

The external QA program includes those procedures utilized to validate the data collected during the CMS PET and to document the CMS PET activities. The primary goal of the external QA program is proper collection and organization of test data followed by clear and concise reporting of the test results. Details on the external QA program for this CMS PET are provided in this section.

3.1 TEST PERSONNEL

The CMS PET activities described in this test plan will be performed by CWM instrumentation staff or qualified contractors. The personnel involved in each program element will be documented on the CMS PET checklists in Attachment A or will be detailed in the contractor's test logs and report.

3.2 REDUCTION OF TEST DATA

The data collected during the CMS PET will be compiled following test completion and will be included in the CMS PET report. Extreme care will be exercised by test personnel to ensure that all manually recorded data are written accurately and legibly. To help increase the quality and uniformity of the test data, all CMS PET activities will be documented on pre-printed data recording forms. Examples of these checklists are provided in Attachment A.

3.3 VALIDATION OF TEST RESULTS

After the CMS PET is performed, CWM will review the data recorded by the test personnel. When evaluating the data, CWM will make sure that the specified procedures were followed, the necessary forms were completed, and the results of each CMS installation, operation, and calibration check were successful. A preliminary review of the test results will be conducted following test completion prior to the CPT. A final validation of the test results will be performed prior to submittal of the CMS PET report.

3.4 REPORTING OF TEST RESULTS

The results of the CMS PET will be compiled and will be summarized in the CMS PET report, which will be prepared by a qualified contractor. The CMS PET report will provide the result of each CMS installation, operation, and calibration check and will also include the completed CMS PET checklists and/or contractor test report. The CMS PET report will be submitted as an appendix to the CPT report for the TDU.

Attachment A:

EXAMPLE CONTINUOUS MONITORING SYSTEMS PERFORMANCE EVALUATION TEST FORMS

CMS PET Log

Measured Parameter	Device Type	CMS PET Completed?
Hazardous waste feed rate	Flow meter	☐
Rotary drum pressure	Pressure transmitter	☐
Rotary drum temperature	Thermocouple and temperature transmitter	☐
Thermal oxidizer unit temperature	Thermocouple and temperature transmitter	☐
Flue gas flow rate	Flow meter	☐
Venturi scrubber pressure drop	Differential pressure transmitter	☐
Packed bed scrubber liquid flow rate	Flow meter	☐
Paced bed scrubber liquid pH	pH transmitter and electrode	☐
Stack gas carbon monoxide concentration	Non-dispersive infrared analyzer	☐
Stack gas oxygen concentration	Paramagnetic analyzer	☐

CMS PET Checklist for Hazardous Waste Feed Rate Flow Meter

Tag Number _____

Installation Check		
Task	**Date Completed**	**Comments**
Make sure that the flow meter is clean and undamaged and that no process leaks are evident.		
Confirm that the physical mounting, orientation, and operating environment of the flow meter are consistent with appropriate manufacturer specifications.		
Ensure that the flow meter's terminal housing contains no moisture and shows no evidence of corrosion.		
Verify that all sensor, transmitter, and control system connections are made properly, clean, and in good repair.		
Make sure that all electrical wiring conforms to plant or manufacturer recommended practices.		
Operational Check		
Task	**Date Completed**	**Comments**
Review the flow meter display for error indications and complete repairs or maintenance as needed.		
Calibration Check		
Task	**Date Completed**	**Comments**
Check the calibration of the flow meter following site-specific or manufacturer's procedures.		

*Note: Installation and operational checks should be conducted prior to instrument calibration.

Additional calibration sheets attached? **Yes:** _____ **No:** _____

Completed by: _____

CMS PET Checklist for Rotary Drum Pressure
Pressure Transmitter
Tag Number _____

Installation Check		
Task	**Date Completed**	**Comments**
Make sure that the transmitter is clean and undamaged and that no process leaks are evident.		
Confirm that the physical mounting, orientation, and operating environment of the transmitter are consistent with appropriate manufacturer specifications.		
Ensure that the transmitter's terminal housing contains no moisture and shows no evidence of corrosion.		
Verify that all transmitter and control system connections are made properly, are clean, and are in good repair.		
Make sure that all electrical wiring conforms to appropriate plant and manufacturer recommended practices.		
Operational Check		
Task	**Date Completed**	**Comments**
Review the transmitter display for error indications and complete repairs or maintenance as needed.		
Calibration Check		
Task	**Date Completed**	**Comments**
Check the calibration of the transmitter following site-specific or manufacturer's procedures.		

*Note: Installation and operational checks should be conducted prior to instrument calibration.

Additional calibration sheets attached? **Yes:** _____ **No:** _____

Completed by: _____

CMS PET Checklist for Rotary Drum Temperature Thermocouple and Temperature Transmitter

Tag Number _____

Installation Check		
Task	**Date Completed**	**Comments**
Check the physical mounting, orientation, and operating environment of the temperature element and transmitter and make sure that they conform to appropriate manufacturer specifications.		
Verify that all thermocouple, transmitter, and control system connections are made properly, are clean, and are in good repair.		
Make sure that all electrical wiring conforms to appropriate plant and manufacturer recommended practices.		
Operational Check		
Task	**Date Completed**	**Comments**
Initiate an instrument self-test, check for displayed error codes, and complete repairs or maintenance as needed.		
Calibration Check		
Task	**Date Completed**	**Comments**
Replace the thermocouple if necessary.		
Check the calibration of the transmitter following site-specific or manufacturer's procedures.		

*Note: Installation and operational checks should be conducted prior to instrument calibration.

Additional calibration sheets attached? **Yes:** _____ **No:** _____

Completed by: _____

CMS PET Checklist for Thermal Oxidizer Unit Temperature Thermocouple and Temperature Transmitter

Tag Number _____

Installation Check		
Task	**Date Completed**	**Comments**
Check the physical mounting, orientation, and operating environment of the temperature element and transmitter and make sure that they conform to appropriate manufacturer specifications.		
Verify that all thermocouple, transmitter, and control system connections are made properly, are clean, and are in good repair.		
Make sure that all electrical wiring conforms to appropriate plant and manufacturer recommended practices.		
Operational Check		
Task	**Date Completed**	**Comments**
Initiate an instrument self-test, check for displayed error codes, and complete repairs or maintenance as needed.		
Calibration Check		
Task	**Date Completed**	**Comments**
Replace the thermocouple if necessary.		
Check the calibration of the transmitter following site-specific or manufacturer's procedures.		

*Note: Installation and operational checks should be conducted prior to instrument calibration.

Additional calibration sheets attached? **Yes:** _____ **No:** _____

Completed by: _____

CMS PET Checklist for Flue Gas Flow Rate Flow Meter

Tag Number _____

Installation Check		
Task	**Date Completed**	**Comments**
Make sure that the flow meter is clean and undamaged and that no process leaks are evident.		
Confirm that the physical mounting, orientation, and operating environment of the flow meter are consistent with appropriate manufacturer specifications.		
Ensure that the flow meter's terminal housing contains no moisture and shows no evidence of corrosion.		
Verify that all sensor, transmitter, and control system connections are made properly, clean, and in good repair.		
Make sure that all electrical wiring conforms to plant or manufacturer recommended practices.		
Operational Check		
Task	**Date Completed**	**Comments**
Review the flow meter display for error indications and complete repairs or maintenance as needed.		
Calibration Check		
Task	**Date Completed**	**Comments**
Check the calibration of the flow meter following site-specific or manufacturer's procedures.		

*Note: Installation and operational checks should be conducted prior to instrument calibration.

Additional calibration sheets attached? **Yes:** _____ **No:** _____

Completed by: _____

CMS PET Checklist for Venturi Scrubber Pressure Drop
Differential Pressure Transmitter
Tag Number _____

Installation Check		
Task	**Date Completed**	**Comments**
Make sure that the transmitter is clean and undamaged and that no process leaks are evident.		
Confirm that the physical mounting, orientation, and operating environment of the transmitter are consistent with appropriate manufacturer specifications.		
Ensure that the transmitter's terminal housing contains no moisture and shows no evidence of corrosion.		
Verify that all transmitter and control system connections are made properly, are clean, and are in good repair.		
Make sure that all electrical wiring conforms to appropriate plant and manufacturer recommended practices.		
Operational Check		
Task	**Date Completed**	**Comments**
Review the transmitter display for error indications and complete repairs or maintenance as needed.		
Calibration Check		
Task	**Date Completed**	**Comments**
Check the calibration of the transmitter following site-specific or manufacturer's procedures.		

*Note: Installation and operational checks should be conducted prior to instrument calibration.

Additional calibration sheets attached? **Yes:** _____ **No:** _____

Completed by: _____

CMS PET Checklist for Packed Bed Scrubber Liquid Flow Rate Flow Meter

Tag Number _____

Installation Check		
Task	**Date Completed**	**Comments**
Make sure that the flow meter is clean and undamaged and that no process leaks are evident.		
Confirm that the physical mounting, orientation, and operating environment of the flow meter are consistent with appropriate manufacturer specifications.		
Ensure that the flow meter's terminal housing contains no moisture and shows no evidence of corrosion.		
Verify that all sensor, transmitter, and control system connections are made properly, clean, and in good repair.		
Make sure that all electrical wiring conforms to plant or manufacturer recommended practices.		
Operational Check		
Task	**Date Completed**	**Comments**
Review the flow meter display for error indications and complete repairs or maintenance as needed.		
Calibration Check		
Task	**Date Completed**	**Comments**
Check the calibration of the flow meter following site-specific or manufacturer's procedures.		

*Note: Installation and operational checks should be conducted prior to instrument calibration.

Additional calibration sheets attached? **Yes:** _____ **No:** _____

Completed by: _____

CMS PET Checklist for Packed Bed Scrubber Liquid pH
pH Transmitter and Electrode
Tag Number _____

Installation Check		
Task	**Date Completed**	**Comments**
Confirm that the physical mounting, orientation, and operating environment of the transmitter are consistent with appropriate manufacturer specifications.		
Verify that all analyzer and control system connections are made properly, are clean, and are in good repair.		
Make sure that all electrical wiring conforms to appropriate plant and manufacturer recommended practices.		
Operational Check		
Task	**Date Completed**	**Comments**
Initiate a transmitter self-test, check for displayed error codes, and complete repairs or maintenance as needed.		
Calibration Check		
Task	**Date Completed**	**Comments**
Check the calibration of the transmitter following site-specific or manufacturer's procedures.		

*Note: Installation and operational checks should be conducted prior to instrument calibration.

Additional calibration sheets attached? **Yes:** _____ **No:** _____

Completed by: _____

CMS PET Checklist for Stack Gas Carbon Monoxide Concentration Non-Dispersive Infrared Analyzer

Tag Number _____

Installation Check		
Task	**Date Completed**	**Comments**
Confirm that the physical mounting and operating environment of the CEMS is consistent with appropriate manufacturer specifications.		
Ensure that all filters are clean and free from residue buildup.		
Perform a leak test on the sample and purge lines following plant or manufacturer recommended procedures.		
Confirm that the calibration gases are properly connected to the unit, the supply lines are pressurized, and regulators are set to the proper pressure.		
Make sure that the flow rate of sample gas to the analyzer is within the range recommended by the manufacturer.		
Make sure that all electrical wiring conforms to plant or manufacturer recommended practices.		
Operational Check		
Task	**Date Completed**	**Comments**
Conduct a relative accuracy test audit.		
Conduct a seven-day calibration drift test.		
Calibration Check		
Task	**Date Completed**	**Comments**
Purge the analyzer with calibration gas. Adjust the analyzer as necessary until readings are within an acceptable difference of the calibration gas value. Analyzer should be calibrated at the zero, low, and high span levels.		

*Note: Installation and operational checks should be conducted prior to instrument calibration.

Additional calibration sheets attached? **Yes:** _____ **No:** _____

Completed by: _____

CMS PET Checklist for Stack Gas Oxygen Concentration Paramagnetic Analyzer

Tag Number _____

Installation Check		
Task	**Date Completed**	**Comments**
Confirm that the physical mounting and operating environment of the CEMS is consistent with appropriate manufacturer specifications.		
Ensure that all filters are clean and free from residue buildup.		
Perform a leak test on the sample and purge lines following plant or manufacturer recommended procedures.		
Confirm that the calibration gases are properly connected to the unit, the supply lines are pressurized, and regulators are set to the proper pressure.		
Make sure that the flow rate of sample gas to the analyzer is within the range recommended by the manufacturer.		
Make sure that all electrical wiring conforms to plant or manufacturer recommended practices.		
Operational Check		
Task	**Date Completed**	**Comments**
Conduct a relative accuracy test audit.		
Conduct a seven-day calibration drift test.		
Calibration Check		
Task	**Date Completed**	**Comments**
Purge the analyzer with calibration gas. Adjust the analyzer as necessary until readings are within an acceptable difference of the calibration gas value. Analyzer should be calibrated at the zero, low, and high span levels.		

*Note: Installation and operational checks should be conducted prior to instrument calibration.

Additional calibration sheets attached? **Yes:** _____ **No:** _____

Completed by: _____

UNITED STATES ENVIRONMENTAL PROTECTION AGENCY
REGION 6
1445 Ross Avenue
Dallas, Texas 75202-2733

2 MAY 2016

Mr. J.D. Head
Fritz, Byrne, Head & Fitzpatrick, PLLC
221 West 6th Street
Suite 960
Austin, Texas 78701

Dear Mr. Head:

Thank you for your October 30, 2015 letter requesting clarification of the hazardous waste regulatory standards for thermal desorption units (TDUs) installed at RCRA treatment, storage, and disposal facilities (TSDFs). I apologize for the delay in responding to your request. In your scenario, the TDU reclaims oil from oil bearing hazardous wastes generated by petroleum refining, production, or transportation practices. You describe a TDU as a device that heats solid material to vaporize, remove, and separate organic constituent materials from solids. In the scenario you describe at a TSDF, the separated organic constituents are typically condensed and recovered as a liquid oil. The TDU process also generates a vent gas after the condensing stream.

Your inquiry also references 40 C.F.R. § 261.6(a)(3)(iv)(C)[1], which provides that:

> Oil reclaimed from oil-bearing hazardous waste from petroleum refining, production, or transportation practices, which reclaimed oil is burned as a fuel without reintroduction to a refining process, so long as the used oil specification under 40 C.F.R. § 279.11 is not subject to regulation under 40 C.F.R. Parts 262 – 268, 270, or 40 C.F.R. Part 124, and is not subject to the notification requirements of Section 3010 of RCRA.

If the above conditions are met, then the reclaimed oil can be burned as a non-hazardous fuel. If the oil-bearing hazardous waste is not from petroleum refining, production, or transportation practices, then the reclaimed oil is subject to RCRA regulation.

If a TDU combusts all or a portion of the vent gas, combustion of the TDU vent gas from RCRA hazardous waste or recyclable materials [40 C.F.R. § 261.6(a)(1)] is considered thermal treatment that is regulated by RCRA. The material being treated (oil-bearing hazardous waste) is already a hazardous waste. Heating hazardous wastes to a gaseous state is subject to regulation under RCRA as treatment of hazardous waste, and thermal treatment after a material becomes a hazardous waste is fully regulated under RCRA. 54 Fed. Reg. 50968, 50973 (December 11, 1989). Thus, thermal treatment of the vent gas requires a RCRA permit.

---

[1] Since you did not reference a specific State in which your client may operate a TDU, this letter cites to the applicable federal regulations. If the State has an authorized RCRA program, the corresponding state regulation would be applicable.

If the vent gas is combusted in the combustion chamber of the TDU, then a permit under 40 C.F.R. Part 264, Subpart O is required, because the TDU would meet the definition of incinerator in 40 C.F.R. § 260.10 (an enclosed device that uses controlled flame combustion). If, on the other hand, the vent gas is vented to and combusted in a thermal oxidizing unit (TOU), the permitting authority may be able to permit the entire unit (TDU and TOU) as a miscellaneous unit under 40 C.F.R. Part 264, Subpart X. A RCRA permit would be required even if the facility is operating as a RCRA exempt recycling activity under 40 C.F.R. § 261.6(a)(3)(iv)(C). If the permitting authority decides to issue a 40 C.F.R. Part 264, Subpart X permit, the permitting authority is required to include in the permit requirements from 40 C.F.R. Part 264, Subparts I through O, AA, BB, and CC, 40 C.F.R. Part 270, 40 C.F.R. Part 63, Subpart EEE, and 40 C.F.R. Part 146 that are appropriate for the miscellaneous unit being permitted as required in 40 C.F.R. § 264.601. The decisions as to what appropriate requirements would be included in the permit would be left to the permitting authority. However, EPA would expect that the permit conditions would be similar to those set forth in the enclosed Consent Agreement and Final Order, In Re: US Ecology Texas, Inc. and TD*X Associates, LP, EPA Docket Nos. RCRA-06-2012-0936 and RCRA-06-2012-0937, filed October 4, 2012.

If you have any questions, please feel free to contact Guy Tidmore of my staff at (214) 665-3142 or via e-mail at tidmore.guy@epa.gov.

Sincerely,

John Blevins
Director
Compliance Assurance and
Enforcement Division

Enclosure

Cc: Penny Wilson, ADEQ
Lourdes Iturralde, LDEQ
John Kieling, NMED
Mike Stickney, ODEQ
James Gradney, TCEQ

ED_002099_0000080-00002

UNITED STATES
ENVIRONMENTAL PROTECTION AGENCY
REGION 6
DALLAS, TEXAS

FILED
2012 OCT -4 AM 9:20
REGIONAL HEARING CLERK
EPA REGION VI

IN THE MATTER OF:	)	
US ECOLOGY TEXAS, INC., and TD*X ASSOCIATES LP	)	DOCKET NOS. RCRA-06-2012-0936 and RCRA-06-2012-0937
RESPONDENTS	)	

CONSENT AGREEMENT AND FINAL ORDER

The Director of the Compliance Assurance and Enforcement Division of the United States Environmental Protection Agency (EPA), Region 6 (Complainant) and US Ecology Texas, Inc. and TD*X Associates L.P. (Respondents) in the above-referenced proceeding, hereby agree to resolve this matter through the issuance of this Consent Agreement and Final Order (CAFO).

I. PRELIMINARY STATEMENT

1. This proceeding for the assessment of civil penalties and the issuance of a compliance order is brought by EPA pursuant to Section 3008 of the Resource Conservation and Recovery Act (RCRA), 42 U.S.C. § 6928, as amended by the Hazardous and Solid Waste Amendments of 1984 (HSWA), and is simultaneously commenced and concluded through the issuance of this Consent Agreement and Final Order (CAFO) pursuant to 40 C.F.R. §§ 22.13(b), 22.18(b)(2) and (3), and 22.37.

2. Notice of this action was given to the State of Texas prior to the issuance of this CAFO, as required by Section 3008(a)(2) of RCRA, 42 U.S.C. § 6928(a)(2).

3. For the purposes of this proceeding, the Respondents admit the jurisdictional allegations contained herein; however, the Respondents neither admit nor deny the specific factual allegations contained in this CAFO.

4. The Respondents explicitly waive any right to contest the allegations and their right to appeal the proposed Final Order set forth therein, and waive all defenses which have been raised or could have been raised to the claims set forth in the CAFO.

5. Compliance with all the terms and conditions of this CAFO shall resolve only those violations which are set forth herein.

6. The Respondents consent to the issuance of the CAFO hereinafter recited and consent to the issuance of the Compliance Order contained therein.

II. FINDINGS OF FACT AND CONCLUSIONS OF LAW

A. PRELIMINARY ALLEGATIONS

7. US Ecology Texas, Inc. (USET) is a corporation incorporated under the laws of the State of Delaware and authorized to do business in the State of Texas.

8. TD*X Associates LP (TD*X) is a limited partnership authorized to do business in the State of Texas.

9. "Person" is defined in 30 T.A.C. § 3.2(25) [40 C.F.R. §§ 260.10 and 270.2], and Section 1004(5) of RCRA, 42 U.S.C. § 6903(15) as "an individual, corporation, organization, government or government subdivision or agency, business trust, partnership, association, or any other legal entity."

10. The Respondent USET is a "person" as defined by 30 T.A.C. § 3.2 (25) [40 C.F.R. § 260.10], and Section 1004 (15) of RCRA, 42 U.S.C. § 6903(15).

ED_002099_0000080-00004