Respondent U.S. Ecology Texas, Inc.:

Mary Reagan
McGinnis, Lochridge & Kilgore, L.L.P.
600 Congress Avenue
Suite 2100
Austin, Texas 78701

Respondent TD*X Associates, L.P.:

J.D. Head
Fritz, Bryne, Head & Harrison, PLLC
98 San Jacinto Boulevard
Suite 2000
Austin, TX 78701

Texas Commission on Environmental Quality

Section Manager
Industrial and Hazardous Permits Section
Waste Permits Division
Texas Commission on Environmental Quality
P.O. Box 13087 MC 130
Austin, TX 78711

H. MODIFICATION

91. The terms, conditions, and compliance requirements of this CAFO may not be modified or amended except as otherwise specified in this CAFO, or upon the written agreement of the Complainant and Respondent(s), and approved by the Regional Judicial Officer, and such modification or amendment being filed with the Regional Hearing Clerk.

I. RETENTION OF ENFORCEMENT RIGHTS

92. EPA does not waive any rights or remedies available to EPA for any other violations by the Respondents of Federal or State laws, regulations, or permitting conditions.

93. Except as herein provided, nothing in this CAFO shall limit the power and authority of EPA or the United States to take, direct, or order all actions to protect public health, welfare, or the environment, or prevent, abate or minimize an actual or threatened release of hazardous

substances, pollutants, contaminants, hazardous substances on, at or from the Respondent USET's facility or Respondent TD*X's oil reclamation unit and related equipment. Furthermore, nothing in this CAFO shall be construed or to prevent or limit EPA's civil and criminal authorities, or that of other Federal, State, or local agencies or departments to obtain penalties or injunctive relief under other Federal, State, or local laws or regulations.

94. The Complainant reserves all legal and equitable remedies available to enforce the provisions of this CAFO. This CAFO shall not be construed to limit the rights of the EPA or United States to obtain penalties or injunctive relief under RCRA or under other federal or state laws, regulations, or permit conditions.

95. In any subsequent administrative or judicial proceeding initiated by the Complainant or the United States for injunctive relief, civil penalties, or other appropriate relief relating to this Facility or the oil reclamation unit, the Respondents shall not assert, and may not maintain, any defense or claim based upon the principles of waiver, res judicata, collateral estoppel, issue preclusion, claim preclusion, claim-splitting, or other defenses based upon any contention that the claims raised by the Complainant or the United States in the subsequent proceeding were or should have been brought in the instant case, except with respect to claims that have been specifically resolved pursuant to this CAFO.

96. This CAFO is not a permit, or a modification of any permit, under any federal, State, or local laws or regulations. The Respondents are responsible for achieving and maintaining complete compliance with all applicable federal, State, and local laws, regulations, and permits. The Respondents' compliance with this CAFO shall be no defense to any action commenced pursuant to any such laws, regulations, or permits, except as set forth herein. The Complainant does not warrant or aver in any manner that the Respondents' compliance with any aspect of this

CAFO will result in compliance with provisions of the RCRA or with any other provisions of federal, State, or local laws, regulations, or permits.

J. INDEMNIFICATION OF EPA

97. Neither EPA nor the United States Government shall be liable for any injuries or damages to person or property resulting from the acts or omissions of the Respondents, their officers, directors, employees, agents, receivers, trustees, successors, assigns, or contractors in carrying out the activities required by this CAFO, nor shall EPA or the United States Government be held out as a party to any contract entered into by the Respondents in carrying out the activities required by this CAFO.

K. COSTS

98. Each party shall bear its own costs and attorney's fees. Furthermore, each Respondent specifically waives its right to seek reimbursement of its costs and attorney's fees under 5 U.S.C. § 504 and 40 C.F.R. Part 17.

L. TERMINATION

99. At such time as the Respondents believe they have completed all of the requirements of this CAFO, they may request that EPA concur whether all of the requirements of this CAFO have been satisfied. Such request shall be in writing and shall provide the necessary documentation to establish whether there has been full compliance with the terms and conditions of this CAFO. EPA will respond to said request in writing within ninety (90) days of receipt of the request. This CAFO shall terminate when all actions required to be taken by this CAFO have been completed, and the Respondents have been notified by the EPA in writing that this CAFO has been satisfied and terminated.

ED_002099_0000079-00056

M. EFFECTIVE DATE

100. This CAFO, and any subsequent modifications, become effective upon filing with the Regional Hearing Clerk.

THE UNDERSIGNED PARTIES CONSENT TO THE ENTRY OF THIS CONSENT AGREEMENT AND FINAL ORDER:

FOR THE RESPONDENT:

Date: 9/27/12

US Ecology Texas, Inc.

FOR THE RESPONDENT:

Date: September 26, 2012

Carl R. Palmer
TD*X Associates L.P.

FOR THE COMPLAINANT:

Date: 10·03·12

John Blevins
Director
Compliance Assurance and
Enforcement Division

FINAL ORDER

Pursuant to the Section 3008 of RCRA, 42 U.S.C. § 6928, and the Consolidated Rules of Practice Governing the Administrative Assessment of Civil Penalties, 40 C.F.R. Part 22, the foregoing Consent Agreement is hereby ratified. This Final Order shall not in any case affect the right or EPA or the United States to pursue appropriate injunctive relief or other equitable relief for criminal sanctions for any violations of law. This Final Order shall resolve only those causes of action alleged herein. Nothing in this Final Order shall be construed to waive, extinguish or otherwise affect the Respondents' (or their officers, agents, servants, employees, successors, or assigns) obligation to comply with all applicable federal, state, and local statutes and regulations, including the regulations that were the subject of this action. The Respondents are ordered to comply with the Compliance Order and terms of settlement as set forth in the Consent Agreement. Pursuant to 40 C.F.R. § 22.31(b), this Final Order shall become effective upon filing with the Regional Hearing Clerk.

Date: 10/4/12

Patrick Rankin
Regional Judicial Officer

APPENDIX 1 – OPERATING PARAMETERS

TABLE A

TDU OIL RECLAMATION SYSTEM INTERIM REQUIREMENTS PRIOR TO TOU INSTALLATION

Tag No.	Equipment Operating Parameter	Operating Parameter Limit	Compliance Basis
TT-18/19	TDU Dryer, Minimum Combustion Chamber Temperature	Maintain Temperature > 1,400°F	AWFCO: CPMS[1], 60-sec time delay
PT-1	TDU Dryer, Maximum Internal Pressure	Maintain Pressure < 0.00" W.C.	AWFCO: CPMS, 6-min Rolling Average (RA)[2]
OE-1	Purge Vent Gas Stream Maximum O_2 Concentration	$O_2 < 7\%$	AWFCO: CPMS, 60-sec time delay
FE-101	Maximum Purge Vent Rate	Purge Vent Rate < 180 scfm	AWFCO: CPMS, Hourly Rolling Average (HRA)[3]
M-100	Minimum Percent Excess Air, Operation of Purge Vent Injector Air Supply	Purge Vent Air Supply > 20% Excess Air	AWFCO: CPMS, Tuning of Combustion Airflow
TE-28	Maximum Condenser System Exhaust Temperature	Temperature < 120°F	AWFCO: CPMS, HRA
	HEPA Filter Installed and Pressure Change Monitored to Ensure Integrity of Filter	Installed and Δ Pressure Monitoring	Installation Check; Δ Pressure Monitored Once Per Shift
	Maximum TDU Feed Mercury Concentration	[Hg] < 50 ppm/Bin	Blending Protocols & Documentation[4]
	Maximum TDU Feed Organic Halide Concentration	[Total Organic Halides] < 1,500 ppm/Bin	Blending Protocols & Documentation

[1] Continuous Process Monitoring System – See Paragraph 69.I of CAFO.

[2] Previous six 1-minute readings are summed and divided by six.

[3] 40 C.F.R. §§ 63.1209(b)(5).

[4] See Paragraph 69.A.3 of the CAFO.

TABLE B

TDU OIL RECLAMATION SYSTEM REQUIREMENTS AFTER TOU INSTALLATION PRE-COMPLIANCE DEMONSTRATION TEST OPERATIONS

Tag No.	Equipment Operating Parameter	Shakedown (Pre-Test) OPL	Compliance Basis
PT-1	TDU Dryer, Maximum Internal Pressure	Maintain Pressure < 0.00" W.C.	AWFCO: CPMS[5], 6-min RA[6]
M-05	TDU Dryer, Cylinder Rotation On	Motor Operating	AWFCO: CPMS, Instantaneous
M-18	Product Discharge System	Motor Operating	AWFCO: CPMS, Instantaneous
M-21	Recirculation Blower Operating	Motor Operating	AWFCO: CPMS, Instantaneous
TT-121	TOU, Minimum Combustion Chamber Temperature	Maintain Temperature > 1,400°F	AWFCO: CPMS, HRA[7]
KY-110	TOU, Minimum Residence Time (Calculated from Purge Vent Flow Rate, Exhaust T, and Air Ratio)	Residence Time > 0.5 seconds	AWFCO: CPMS, HRA
AE-5/ OE-5	TOU Exhaust Gas, Maximum CO Concentration	[CO] < 100 ppmV @ 7% O_2	AWFCO: CEMS for CO, HRA
OE-1	Purge Vent Gas Stream, Maximum O_2 Concentration	$[O_2]$ < 7%	AWFCO: CPMS, Instantaneous
FE-101	Maximum Purge Vent Rate	Vent Flow < 250 scfm	AWFCO: CPMS, HRA
FCV-102	Valve Position to Ensure Purge Vent is not Directed Away from TOU	Valve Closed	AWFCO: CPMS, 60-sec delay
M-121	Minimum Percent Excess Air , Operation of Purge Vent Injector Air Supply	Purge Vent Air Supply > 20% Excess Air	AWFCO: CPMS, Tuning of Combustion Airflow
TE-28	Maximum Condenser System Exhaust Temperature	Maintain Temperature < 120°F	AWFCO: CPMS, HRA

[5] Continuous Process Monitoring System – See Paragraph 69.I of the CAFO.

[6] Previous six 1-minute readings are summed and divided by six.

[7] 40 C.F.R. §§ 63.1209(a)(6) and 63.1209(b)(5).

	HEPA Filter Installed and Pressure Change Monitored to Ensure Integrity of Filter	Installed and Δ Pressure Monitoring	Installation Check; Δ Pressure Monitored Once Per Shift
	Maximum TDU Feed Mercury Concentration	[Hg] < 50 ppm/Bin	Blending Protocols & Documentation[8], Feed Stream Analysis Plan (if applicable)[9]
	Maximum TDU Feed Organic Halide Concentration	[Total Organic Halides] < 1,500 ppm/Bin	Blending Protocols & Documentation, Feed Stream Analysis Plan (if applicable)
	Maximum TDU Feed Semi-Volatile Metals Concentration[10]	N/A	Blending Protocols & Documentation, Feed Stream Analysis Plan (if applicable)
	Maximum TDU Feed Low-Volatile Metals Concentration[11]	N/A	Blending Protocols & Documentation, Feed Stream Analysis Plan (if applicable)

[8] See Paragraph 69.A.3 of the CAFO.

[9] See Paragraph 69.A.11 of the CAFO.

[10] Semi-volatile metals means a combination of cadmium and lead.

[11] Low-volatile metals means a combination of Arsenic, Beryllium, and Chromium.

TABLE C

TDU OIL RECLAMATION REQUIREMENTS AFTER TOU INSTALLATION POST-COMPLIANCE DEMONSTRATION TEST OPERATIONS

Tag No.	Equipment Operating Parameter	Interim/Final (Post-Test) OPL	Compliance Basis
PT-1	TDU Dryer, Maximum Internal Pressure	Maintain Pressure < 0.00" W.C.	AWFCO: CPMS[12], 6-min RA[13]
M-05	TDU Dryer, Cylinder Rotation On	Motor Operating	AWFCO: CPMS, Instantaneous
M-18	Product Discharge System	Motor Operating	AWFCO: CPMS, Instantaneous
M-21	Recirculation Blower Operating	Motor Operating	AWFCO: CPMS, Instantaneous
TT-121	TOU, Minimum Combustion Chamber Temperature	OPL Established @ > 3-Run Average from CDT	AWFCO: CPMS, HRA[14]
KY-110	TOU, Minimum Residence Time (Calculated from Purge Vent Flow Rate, Exhaust T, and Air Ratio)	Residence Time > 0.5 seconds	AWFCO: CPMS, HRA
AE-5/ OE-5	TOU Exhaust Gas, Maximum CO Concentration	Semi-Annual Testing until Waste Analysis Plan Approved, then Annual Testing	Performance Testing in lieu of CEMS; Waste Analysis Plan based with other OPLs
OE-1	Purge Vent Gas Stream, Maximum O_2 Concentration	$[O_2] < 7\%$	AWFCO: CPMS, Instantaneous
FE-101	Maximum Purge Vent Rate	Vent Flow < 250 scfm	AWFCO: CPMS, HRA
FCV-102	Valve Position to Ensure Purge Vent is not Directed Away from TOU	Valve Closed	AWFCO: CPMS, 60-sec time delay
M-121	Minimum Percent Excess Air, Operation of Purge Vent Injector Air Supply	Purge Vent Air Supply > 20% Excess Air	AWFCO: CPMS, Tuning of Combustion Airflow

[12] Continuous Process Monitoring System – See Paragraph 69.I of CAFO.

[13] Previous six 1-minute readings are summed and divided by six.

[14] 40 C.F.R. §§ 63.1209(a)(6) and 63.1209(b)(5).

TE-28	Maximum Condenser System Exhaust Temperature	OPL Established @ < 3-run Average Based on CDT	AWFCO: CPMS, HRA
	HEPA Filter Installed and Pressure Change Monitored to Ensure Integrity of Filter	Installed and Δ Pressure Monitoring	Installation Check; Δ Pressure Monitored Once Per Shift
	Maximum TDU Feed Mercury Concentration	[Hg] < 50 ppm/Bin	Blending Protocols & Documentation[15], Feed Stream Analysis Plan (if applicable)[16]
	Maximum TDU Feed Organic Halide Concentration	OPL Established as Measured Ratio[17]	Blending Protocols & Documentation, Feed Stream Analysis Plan (if applicable)
	Maximum TDU Feed Semi-Volatile Metals Concentration[18]	OPL Established as Measured Ratio[19]	Blending Protocols & Documentation, Feed Stream Analysis Plan (if applicable)
	Maximum TDU Feed Low-Volatile Metals Concentration[20]	OPL Established as Measured Ratio[21]	Blending Protocols & Documentation, Feed Stream Analysis Plan (if applicable)

[15] See Paragraph 69.A.3 of the CAFO.

[16] See Paragraph 69.A.11 of the CAFO.

[17] Maximum TDU Feed Concentration established as a measured ratio (not to exceed 4000 ppm/bin) from emissions data collected during CDT. See plan example calculations.

[18] Semi-volatile metals means a combination of cadmium and lead.

[19] Maximum TDU Feed Concentration established as measured ration from emissions data collected during CDT. See plan example calculations.

[20] Low-volatile metals means a combination of Arsenic, Beryllium, and Chromium.

[21] Maximum TDU Feed Concentration established as measured ratio from emissions data collected during CDT. See plan example calculations.

APPENDIX 2 – BLENDING PROTOCOLS

CONTAINS CONFIDENTIAL BUSINESS INFORMATION

DOCUMENT STORED IN FILE ROOM

APPENDIX 3

COMPLIANCE DEMONSTRATION TEST PLAN

CONTAINS CONFIDENTIAL BUSINESS INFORMATION

DOCUMENT STORED IN FILE ROOM

CERTIFICATE OF SERVICE

I hereby certify that on the 4th day of October, 2012, the original and one copy of the foregoing Consent Agreement and Final Order (CAFO) was hand delivered to the Regional Hearing Clerk, U.S. EPA - Region 6, 1445 Ross Avenue, Dallas, Texas 75202-2733, and that true and correct copies of the CAFO were sent to the following by the method indicated below:

For US Ecology Texas, Inc.

Certified Mail – Return Receipt Requested – 7007 0710 0002 1385 1491

Mary Reagan
McGinnis, Lochridge & Kilgore, L.L.P.
600 Congress Avenue, Suite 2100
Austin, Texas 78701

For TD*X Associates LP

Certified Mail – Return Receipt Requested – 7007 0710 0002 1385 1507

J.D. Head
Fritz, Bryne, Head & Harrison, PLLC
98 San Jacinto Boulevard
Suite 2000
Austin, TX 78701

Evan L Pearson

UNITED STATES ENVIRONMENTAL PROTECTION AGENCY
REGION 6
1445 Ross Avenue
Dallas, Texas 75202-2733

JUN 24 2016

Mr. Estuardo Silva
Louisiana Department of Environmental Quality
Office of Environmental Services
Waste Permits Division
Post Office Box 4313
Baton Rouge, Louisiana 70821-4313

RE: Draft Hazardous Waste Modified Operating and Post Closure Permit
Chemical Waste Management, Inc.
7170 John Brannon Road
Carlyss, LA 70665
Permit# LAD00077201-OP-RN-MO-1
AI# 742/PER20140007

Dear Mr. Silva:

EPA has the following comments on the draft Hazardous Waste Operating and Post Closure Permit for the Chemical Waste Management, Inc. facility located at 7170 John Brannon Road, Carlyss, LA 70665 (Draft Permit). Chemical Waste Management, Inc. (Chem Waste) seeks to add two oil recovery units (ORUs), two thermal desorber units (TDUs), and 19 associated tanks to its operations at its Carlyss, Louisiana facility. The ORUs will be utilized to separate recoverable oils from drilling fluids, refinery tank bottoms, commercially exempt waste, and other non-hazardous and hazardous waste. The TDUs will treat contaminated tank bottoms, sludge, catalyst slurry oil, and other non-hazardous and hazardous waste. The TDUs will be designed to separate organic constituents from a waste stream by condensing the organic components, which would allow for the recovery or disposal of the contaminants. The non-condensable gases will be routed to a thermal oxidizer unit (TOU). The TDU is proposed to be permitted as a miscellaneous unit.

Condition II.E.25.e of the Draft Permit provides that "[o]ne hundred and eighty (180) days before planned construction, the Permittee must submit finalized engineering specifications and operating parameters for the proposed Thermal Desorber Units to the Administrative Authority for approval. The information submitted must comply with the requirements of this permit and L.A.C. 33:V. Chapter 32, and all applicable regulations." Chapter 32 is entitled "Miscellaneous Units", and is the State equivalent of 40 C.F.R. Part 264, Subpart X. Due to the absence of any proposed engineering specifications, performance test, operating conditions, operating parameters, monitoring and recordkeeping requirements, we have identified permit requirements for the TDU and TOU below that we believe are required by the regulations for operation of the TDU and TOU.

How the TDU and TOU are permitted determine the appropriate permit requirements for the units. The material being treated in the TDU and the TOU is already a hazardous waste. Thermal treatment after a material becomes a hazardous waste is fully regulated under RCRA, 54 Fed. Reg. 50968, 50973 (December 11, 1989). The combustion of the non-condensable gases in the TOU meets the

definition of "thermal treatment" in L.A.C. 33:V.109 [40 C.F.R. § 260.10] and thus requires a RCRA permit. The TOU would meet the definition of incinerator in L.A.C. 33:V.109 [40 C.F.R. § 260.10] (an enclosed device that uses controlled flame combustion). However, rather than permitting the TOU as an incinerator, LDEQ could permit the TDU and TOU together as a miscellaneous unit under L.A.C. 33:V. Chapter 32 [40 C.F.R. Part 264, Subpart X]. If this occurs, then LDEQ is required to include in the permit requirements from L.A.C. 33:V. Chapters 3, 5, 7, 17, 19, 21, 23, 25, 27, 29, 31, 4301.F, H, 4302, 4303 and 4305, all other applicable requirements of L.A.C. 33:V. Subpart 1, and of 40 C.F.R. Part 63, Subpart EEE and 40 C.F.R. Part 146, that are appropriate for the miscellaneous unit being permitted.[1]

The decisions as to what appropriate requirements would be included in the permit would be left to LDEQ. However, we believe that the permit conditions would be similar to those set forth in the enclosed Consent Agreement and Final Order, In Re: US Ecology Texas, Inc. and TD*X Associates, LP, EPA Docket Nos. RCRA-06-2012-0936 and RCRA-06-2012-0937, filed October 4, 2012. These permit conditions would include, but not be limited to: 1) a startup, shutdown, and malfunction plan; (2) a performance test, which includes meeting a 99.99% destruction removal efficiency for each principle organic hazardous constituent and meeting certain emission limits; (3) automatic waste feed cutoff system; (4) operating parameters; and (5) investigation, recordkeeping, testing, and reporting requirements. This position was also previously communicated to LDEQ in a letter from EPA to Mr. J. D. Head dated May 2, 2016, in which a copy was sent to LDEQ. A copy of this letter is also enclosed.

If you have any questions, please feel free to call me at (214) 665-8022.

Sincerely,

Susan Spalding
Associate Director
Hazardous Waste Branch (6MM-R)
Multimedia Division

Enclosure

---

[1] The equivalent Federal provisions are 40 C.F.R. Part 264, Subparts I through O, AA, BB, and CC, 40 C.F.R. Part 270, 40 C.F.R. Part 63, Subpart EEE, and 40 C.F.R. Part 146.
40 C.F.R. § 264.601.

EXHIBIT 2

A - Rineco Consent Decree August 16, 2010

B - Rineco Consent Decree Modification January 3, 2012

IN THE UNITED STATES DISTRICT COURT
FOR THE EASTERN DISTRICT OF ARKANSAS
WESTERN DIVISION

UNITED STATES OF AMERICA,	)	
	)	
Plaintiff,	)	
	)	Civil Action No. 4-07-CV
v.	)	01189SWW
	)	
	)	
RINECO CHEMICAL	)	
INDUSTRIES, INC.	)	
	)	
Defendant.	)	
	)	

CONSENT DECREE

TABLE OF CONTENTS

I. JURISDICTION AND VENUE ..... -5-

II. APPLICABILITY ..... -5-

III. DEFINITIONS ..... -7-

IV. CIVIL PENALTY ..... -9-

V. COMPLIANCE REQUIREMENTS ..... -10-

VI. REPORTING REQUIREMENTS ..... -19-

VII. STIPULATED PENALTIES ..... -21-

VIII. FORCE MAJEURE ..... -26-

IX. DISPUTE RESOLUTION ..... -30-

X. INFORMATION COLLECTION AND RETENTION ..... -33-

XI. EFFECT OF SETTLEMENT/RESERVATION OF RIGHTS ..... -36-

XII. COSTS ..... -38-

XIII. NOTICES ..... -39-

XIV. EFFECTIVE DATE ..... -40-

XV. RETENTION OF JURISDICTION ..... -40-

XVI. MODIFICATION ..... -40-

XVII. TERMINATION ..... -41-

XVIII. PUBLIC PARTICIPATION ..... -42-

XIX. SIGNATORIES/SERVICE ..... -43-

XX. INTEGRATION ..... -43-

XXI. FINAL JUDGMENT ..... -44-

ED_002099_0000079-00075

Plaintiff United States of America ("United States"), on behalf of the United States Environmental Protection Agency ("EPA"), filed a Complaint in this action on December 12, 2007, alleging that Defendant Rineco Chemical Industries, Inc. ("Defendant"), violated Sections 3005(a) and 3010 of the Resource Conservation and Recovery Act ("RCRA"), 42 U.S.C. §§ 6925(a) and 6930, and Arkansas Pollution Control and Ecology Commission ("APCEC") Regulation No. 23, which incorporates federal regulations approved by EPA pursuant to RCRA that are part of the federally-enforceable State hazardous waste program relating to the generation, transportation, treatment, storage, handling, and disposal of hazardous waste. On November 24, 2008, the Court issued an Order (doc.#85) which granted the United States' Motion for Leave to File an Amended and Supplemental Complaint, which in addition to the violations alleged in the Complaint, alleges that Rineco violated its RCRA Permit 28(H), Modules II(A), III(M), III(E), XV(A); and 40 C.F.R. §§ 264.31, 264.173, 264.1056, 264.1086(d)(3).

The Complaint alleges that Defendant has treated, stored, and disposed of hazardous waste in the Thermal Metal Wash unit ("TMW") at its facility located near Benton, Arkansas, without a RCRA permit, in violation of Section 3005(a) of RCRA, 42 U.S.C. § 6925(a),and APCEC Regulation No. 23 Part 264, Subpart X and Part 270, §§ 264.600, 270.1, 270.2, 270.10; that Defendant has failed

ED_002099_0000079-00076

to file with the EPA or the State of Arkansas ("State") a notification and description of hazardous waste activity performed in the TMW unit at Defendant's facility in violation of Section 3010 of RCRA, 42 U.S.C. § 6930; and that Defendant has failed to establish financial assurance requirements for closure of the TMW and related storage units at Defendant's facility in violation of 40 C.F.R. §§ 264.140 - 264.151 and APCEC Regulation No. 23 §§ 264.140 - 264.151.

In addition to the allegations in the Complaint, the Amended and Supplemental Complaint alleges that Defendant has failed to design, maintain, construct, and operate the TMW and other units at Defendant's facility in such a manner as to minimize the possibility of a fire, explosion, or any unplanned sudden or non-sudden release of hazardous waste or hazardous waste constituents to air, soil, or surface water, in violation of Defendant's RCRA Permit 28(H), Module II(A), 40 C.F.R. § 264.31, and APCEC Regulation No. 23 § 264.31; failed to equip numerous open-ended values and lines with caps or plugs in violation of Defendant's RCRA Permit 28(H), Module XV(A), 40 C.F.R. § 264.1056, and APCEC Regulation No. 23 § 264.1056/265.1056; and stored hazardous waste in an open container for more than fifteen (15) minutes in violation of Defendant's RCRA Permit 28(H), Module III(E), 40 C.F.R. § 264.173, RCRA Permit 28(H), Module III(M), 40 C.F.R. §

ED_002099_0000079-00077

264.1086(d)(3), and APCEC Regulation No. 23 §§ 264.173, 264.1086(d)(3).

On March 4, 2009, the Court issued a Memorandum and Order (doc. #91) in which the Court granted the United States' Motion for Summary Judgment (doc. #40) as to liability on each of the five claims asserted in the Complaint and denied Defendant's Motion for Summary Judgment (doc. #13). The Court further ordered that the matter would proceed as to any appropriate civil penalties and as to the three remaining claims in the Amended and Supplemental Complaint. Nothing in this Consent Decree shall supercede the findings of fact or conclusions of law set forth in the Court's Order dated March 4, 2009.

Defendant denies any liability to the United States arising out of the transactions or occurrences alleged in the United States' Complaint and the United States' Amended and Supplemental Complaint. Defendant also denies the truth of any allegations in the Complaint or the Amended and Supplemental Complaint except the allegations pertaining to venue and subject matter and personal jurisdiction.

The Parties recognize, and the Court by entering this Consent Decree finds, that this Consent Decree has been negotiated by the Parties in good faith and will avoid litigation between the Parties and that this Consent Decree is fair, reasonable, and in the public interest.

ED_002099_0000079-00078

NOW, THEREFORE, with the consent of the Parties, IT IS HEREBY ADJUDGED, ORDERED, AND DECREED as follows:

I. JURISDICTION AND VENUE

1. This Court has jurisdiction over the subject matter of this action, pursuant to 28 U.S.C. §§ 1331, 1345, and 1355, and Section 3008(a) of RCRA, 42 U.S.C. § 6928(a), and over the Parties. Venue lies in this District pursuant to 28 U.S.C. §§ 1391(b) and (c), and 1395(a)(1), because the violations complained of and the claims asserted herein arose in this district, and because Defendant conducts business at facilities located in this district. For purposes of this Decree, or any action to enforce this Decree, Defendant consents to the Court's jurisdiction over this Decree and any such action and over Defendant and consents to venue in this judicial district.

II. APPLICABILITY

2. The obligations of this Consent Decree apply to and are binding upon the United States, and upon the Defendant and any successors, assigns, or other entities or persons otherwise bound by law.

3. No transfer of ownership or operation of the Facility, whether in compliance with the procedures of this Paragraph or otherwise, shall relieve Defendant of its obligation to ensure that the terms of the Decree are implemented. At least thirty (30) Days prior to such transfer, Defendant shall provide a copy

ED_002099_0000079-00079

of this Consent Decree to the proposed transferee and shall simultaneously provide written notice of the prospective transfer, together with a copy of the proposed written agreement, to EPA Region 6, the United States Attorney for the Eastern District of Arkansas, and the United States Department of Justice, in accordance with Section XIII of this Decree (Notices). Defendant may assert that such proposed written agreement to be provided under this Paragraph is protected as Confidential Business Information ("CBI") under 40 C.F.R. Part 2.

4. Defendant shall provide a copy of this Consent Decree to all officers, employees, and agents whose duties include responsibility for compliance with any provision of this Decree, as well as to any contractor entity retained to perform work required under this Consent Decree. Defendant shall condition any such contract upon performance of the work in conformity with the terms of this Consent Decree.

5. In any action to enforce this Consent Decree, Defendant shall not raise as a defense the failure by any of its officers, directors, employees, agents, or contractors to take any actions necessary to comply with the provisions of this Consent Decree, unless Defendant establishes that such failure resulted from a Force Majeure event as defined in Section VIII of this Consent Decree.

ED_002099_0000079-00080

III. DEFINITIONS

6. Terms used in this Consent Decree that are defined in RCRA or in regulations promulgated pursuant to or authorized by RCRA shall have the meanings assigned to them in RCRA or such regulations, unless otherwise provided in this Decree. Regulations referred to by their federal citations also shall include reference to their State counterparts (e.g. 40 C.F.R. § 264.601 also includes reference to APCEC Regulation No. 23 § 264.601). Whenever the terms set forth below are used in this Consent Decree, the following definitions shall apply:

a. "ADEQ" shall mean the Arkansas Department of Environmental Quality and any of its successor departments or agencies;

b. "Amended Complaint" shall mean the Amended and Supplemental Complaint filed by the United States in this action;

c. "Complaint" shall mean the Complaint filed by the United States in this action;

d. "Consent Decree" or "Decree" shall mean this Decree;

e. "Day" shall mean a calendar day unless expressly stated to be a business day. In computing any period of time under this Consent Decree, where the last day would fall on a Saturday, Sunday, or a federal holiday, the period shall run until the close of business of the next business day;

ED_002099_0000079-00081

f. "Defendant" shall mean Rineco Chemical Industries, Inc., a corporation incorporated under the laws of the State of Arkansas and licensed to do business in the State of Arkansas;

g. "EPA" shall mean the United States Environmental Protection Agency and any of its successor departments or agencies;

h. "Effective Date" shall have the definition provided in Section XIV;

i. "Facility" shall mean Defendant's land, structures, other appurtenances, and improvements on the land, used for the treatment, storage, or disposal of hazardous waste located at 817 Vulcan Road in Benton, Arkansas;

j. "Paragraph" shall mean a portion of this Decree identified by an Arabic numeral;

k. "Parties" shall mean the United States and Defendant;

l. "Section" shall mean a portion of this Decree identified by a roman numeral;

m. "State" shall mean the State of Arkansas;

n. "TMW" shall mean the Thermal Metal Wash unit, including the thermal oxidation unit, at the Facility.

p. "United States" shall mean the United States of America, acting on behalf of EPA.

ED_002099_0000079-00082

IV. CIVIL PENALTY

7. Within thirty (30) Days after the Effective Date of this Consent Decree, Defendant shall pay the sum of $1,350,000 as a civil penalty.

8. Defendant shall pay the civil penalty due by Fed Wire Electronic Funds Transfer ("EFT") to the U.S. Department of Justice in accordance with written instructions to be provided to Defendant, following lodging of the Consent Decree, by the Financial Litigation Unit of the U.S. Attorney's Office for the Eastern District of Arkansas, USA Post Office Box 1229 Little Rock, AR 72203, 501-340-2600. At the time of payment, Defendant shall send a copy of the EFT authorization form and the EFT transaction record, together with a transmittal letter, which shall state that the payment is for the civil penalty owed pursuant to the Consent Decree in United States v. Rineco Chemical Industries, Inc., and shall reference the civil action number and DOJ case number 90-7-1-08902, to the United States in accordance with Section XIII of this Decree (Notices); by email to acctsreceivable.CINWD@epa.gov; and by mail to:

EPA Cincinnati Finance Office
26 Martin Luther King Drive
Cincinnati, Ohio 45268

9. Defendant shall not deduct any penalties paid under this Decree pursuant to this Section or Section VII (Stipulated Penalties) in calculating its federal income tax.

V. COMPLIANCE REQUIREMENTS

10. Application for permit for the TMW. Within sixty (60)Days after the Effective Date of this Consent Decree, Defendant shall submit to the Director of ADEQ an application for a RCRA permit for its TMW as a Subpart X-Miscellaneous Unit in accordance with 40 C.F.R. §§ 264.600-264.603, 40 C.F.R. §§ 270.10-270.14, 270.23, 270.30-270.33, the Risk Burn Guidance for Hazardous Waste Combustion Facilities, OSWER, EPA530-R-01-001, July 2001; and the Human Health Risk Assessment Protocol for Hazardous Waste Combustion Facilities, OSWER, EPA-R-05-006, September 2005. Within sixty (60)Days after the Effective Date of this Consent Decree, Defendant also shall submit to the Director of ADEQ an application for a RCRA permit for storage of hazardous waste related to the TMW. Defendant shall simultaneously provide the Associate Director of the Hazardous Waste Enforcement Branch, EPA Region 6, with a copy of such applications, in accordance with Section XIII (Notices). The TMW must be located, designed, constructed, operated, maintained, and closed in a manner that will ensure protection of human health and the environment. The permit application must include such terms and conditions as necessary to protect human health and the environment, including, but not limited to, as appropriate, design and operating requirements for responses to releases of hazardous waste or hazardous constituents from the TMW. The

ED_002099_0000079-00084

permit application must include those requirements of subparts I through O, X, and subparts AA through CC of part 264, part 270, part 63 subpart EEE, and part 146 of chapter 40 that are appropriate for the TMW.

11. Defendant must notify the public, hold a public meeting, and offer the public an opportunity to comment regarding Defendant's application for a permit for the TMW in accordance with 40 C.F.R. Part 124, as applicable, and 40 C.F.R. § 270.42(c).

12. Preparation and Submission of Trial Burn Plan. For the purpose of determining feasibility of compliance with the performance standards of 40 C.F.R. § 264.343, and determining adequate operating conditions under 40 C.F.R. §§ 264.345, as part of its RCRA permit application for the TMW, Defendant must prepare and submit to the Director of ADEQ a trial burn plan and perform a trial burn in accordance with 40 C.F.R. § 270.62(b).

13. The trial burn plan must include all of the information required by 40 C.F.R. § 270.62(b)(2).

14. After the Director of ADEQ has evaluated the sufficiency of the information provided, Defendant must provide any supplemental information required by the Director of ADEQ in accordance with 40 C.F.R. § 270.62(b)(3).

15. During the trial burn, Defendant must calculate the trial Principal Organic Hazardous Constituents ("POHCs")

ED_002099_0000079-00085

specified by the Director of ADEQ based on the waste analysis data in the trial burn plan submitted by Defendant in accordance with 40 C.F.R. § 270.62(b)(4).

16. The trial burn performed by Defendant must comply with 40 C.F.R. § 270.62(b)(5).

17. Defendant shall not commence the trial burn until after the Director of ADEQ has issued a notice to all persons on the Facility mailing list as set forth in 40 C.F.R. § 124.10(c)(1)(ix) and to the appropriate units of State and local government as set forth in 40 C.F.R. §§ 124.10(c)(1)(x) announcing the scheduled commencement and completion date for the trial burn as required by 40 C.F.R. § 270.62(b)(6).

18. During the trial burn (or as soon after the burn as is practicable), Defendant shall make the determinations required by 40 C.F.R. § 270.62(b)(7). During the trial burn, Defendant must demonstrate compliance with the performance standards required by 40 C.F.R. § 264.343.

19. Preparation and Submission of Risk Burn Plan. To collect emissions data for evaluation in a site-specific risk assessment, as part of its RCRA permit application for the TMW, Defendant also must prepare and submit a risk burn plan and perform a risk burn in accordance with the Risk Burn Guidance for Hazardous Waste Combustion Facilities, OSWER, EPA530-R-01-001, July 2001; and the Human Health Risk Assessment Protocol for

Hazardous Waste Combustion Facilities, OSWER, EPA-R-05-006, September 2005. The risk burn should be integrated with the trial burn to produce a consistent set of proposed enforceable permit conditions.

20. The risk burn performed by Defendant shall collect fugitive and stack emissions data and define the operating requirements for the TMW based on control parameters identified in Chapters 4 through 7 of the Risk Burn Guidance for Hazardous Waste Combustion Facilities. During the risk burn, Defendant shall evaluate each of the constituents specified in Chapters 4 though 7 of the Risk Burn Guidance including the dioxins, furans, other organics, metals, particulate matter, hydrogen chloride, and chlorine identified therein.

21. During the risk burn (or as soon after the burn as is practicable), the Defendant shall make the determinations set forth in the Risk Burn Guidance for Hazardous Waste Combustion Facilities, and the Human Health Risk Assessment Protocol for Hazardous Waste Combustion Facilities deemed appropriate by the Director of ADEQ. During the risk burn, Defendant must demonstrate that emissions from the TMW do not present a risk to human health or the environment.

22. Within ninety (90) days after completion of the trial and risk burns, or later if approved by the Director of ADEQ, Defendant must submit to the Director of ADEQ a certification

that the trial and risk burns have been carried out in accordance with the approved trial and risk burn plans, and must submit the results of all the determinations required in 40 C.F.R. § 270.62(b)(7).

23. All data collected during the trial and risk burns must be submitted to the Director of ADEQ following the completion of the trial and risk burns. A copy of the data collected during the trial and risk burns also must be submitted to the Associate Director of the Hazardous Waste Enforcement Branch, EPA Region 6, in accordance with Section XIII of this Consent Decree (Notices).

24. All submissions required by Section V must be certified on behalf of the Defendant by the signature of a person authorized to sign a permit application or a report under 40 C.F.R. § 270.11.

25. Defendant shall request that the final RCRA permit for the TMW include performance standards, operating requirements, monitoring and inspection requirements, and closure requirements in accordance with 40 C.F.R. §§ 264.343, 264.345, 264.347, and 264.351. Defendant also shall request that the final permit for the TMW shall include risk based terms and conditions necessary to protect human health and the environment in accordance with the Risk Burn Guidance for Hazardous Waste Combustion Facilities

ED_002099_0000079-00088

and the Human Health Risk Assessment Protocol for Hazardous Waste Combustion Facilities.

26. Continued Operation. Upon Defendant's submission of the initial application for a RCRA permit for the TMW, including the trial and risk burn plans, Defendant may continue to operate the TMW during the one year following such submission if Defendant otherwise maintains compliance with the requirements of this Decree. Whenever the Director of ADEQ issues a final permit for the TMW, Defendant immediately must comply with that permit, even if the permit is issued in less than one year after Defendant submits its initial application. Without a final permit, Defendant may not operate the TMW at anytime later than one year after Defendant submits its initial application, except as that time is enlarged under Paragraphs 29, 45, 46, 47, or 76 of this Consent Decree. The requirements of this Paragraph shall not be stayed as a result of any challenge or appeal by Defendant of the final RCRA permit for the TMW, or any of its terms or conditions, issued by the Director of ADEQ.

27. EPA Review and Comment. Nothing in this Consent Decree shall limit the EPA's rights under applicable environmental laws or regulations, including but not limited to, Section 3005(c)(3) of RCRA, 42 U.S.C. § 6925, 40 CFR §§ 270.32 and 40 C.F.R. §§ 271.19, to review, comment, and incorporate applicable requirements of parts 264 and 266 through 268 of

ED_002099_0000079-00089

chapter 40 directly into the permit or establish other permit conditions that are based on those parts; or to take action under Section 3008(a)(3) of RCRA, 42 U.S.C. § 6928, against Defendant on the ground that the RCRA permit for the TMW does not comply with a condition that the EPA Regional Administrator in commenting on the permit application or draft permit stated was necessary to implement approved State program requirements, whether or not that condition was included in the final permit. If Defendant disputes an action taken by EPA pursuant to 40 CFR §§ 270.32 or 40 C.F.R. §§ 271.19, the Defendant may ask the District Court to resolve such dispute in accordance with Section IX of this Consent Decree (Dispute Resolution). The District Court shall resolve such dispute in accordance with applicable law.

28. To comply with this Consent Decree, Defendant must obtain a RCRA permit for the TMW as a Subpart X-Miscellaneous Unit in accordance with 40 C.F.R. §§ 264.600-264.603, 40 C.F.R. §§ 270.10-270.14, 270.23, 270.30-270.33, the Risk Burn Guidance for Hazardous Waste Combustion Facilities, OSWER, EPA530-R-01-001, July 2001; and the Human Health Risk Assessment Protocol for Hazardous Waste Combustion Facilities, OSWER, EPA-R-05-006, September 2005.

29. TMW Permit. Defendant shall prepare and submit its application for a RCRA permit for the TMW as required in this

ED_002099_0000079-00090

Section V. Defendant may seek relief under the provisions of Section VIII of this Consent Decree (Force Majeure) for any delay in the performance of any such obligations resulting from a failure to obtain, or a delay in obtaining, any permit or approval required to fulfill such obligation, if Defendant has submitted a timely and complete application and has taken all other actions necessary to obtain such permit or approval.

30. Fugitive Emissions. Within thirty (30)Days after the Effective Date of this Consent Decree, during the period before Defendant obtains its RCRA permit for the TMW, consistent with 40 C.F.R. §§ 264.345(d) and 264.347(b), Defendant shall control fugitive emissions from the TMW by:

a. Keeping the treatment zone totally sealed against fugitive emissions; or

b. Maintaining a treatment zone pressure lower than atmospheric pressure; or

c. Establishing an alternative means of control demonstrated (with part B of the permit application) to provide fugitive emissions control equivalent to maintenance of treatment zone pressure lower than atmospheric pressure.

Defendant shall conduct a thorough visual inspection of the TMW treatment zone and associated equipment (pumps, values, conveyors, pipes, etc.), at least daily, for leaks, spills, fugitive emissions, and other signs of tampering. The results of

this inspection must be recorded, and such records must be placed in the operating record for the Facility required by 40 C.F.R. § 264.73.

As part of its application for a RCRA permit for the TMW, Defendant shall propose as permit conditions the above fugitive emissions requirements.

31. Within sixty (60) Days after the Effective Date of this Consent Decree, Defendant shall file with the State a notification and description of hazardous waste activity expressly related to the TMW performed at the Facility in accordance with Section 3010 of RCRA, 42 U.S.C. § 6930. A copy of the notification required by this Paragraph also must be submitted to the Associate Director of the Hazardous Waste Enforcement Branch, EPA Region 6, in accordance with Section XIII of this Consent Decree (Notices).

32. Within sixty (60) Days after the Effective Date of this Consent Decree, Defendant shall submit to the Director of ADEQ an application for and establish financial assurance for closure of the TMW and related storage units at the Facility in accordance with Section 3004(a) of RCRA, 42 U.S.C. § 6924(a), and 40 C.F.R. § 264, Subpart H. A copy of the application and documentation of the financial assurances required by this Paragraph also must be submitted to the Associate Director of the

ED_002099_0000079-00092

Hazardous Waste Enforcement Branch, EPA Region 6, in accordance with Section XIII of this Consent Decree (Notices).

VI. REPORTING REQUIREMENTS

33. Defendant shall submit the following reports:

(a). Within 30 days after the end of each six month period following the Effective Date of this Consent Decree but before the final RCRA permit for the operation of the TMW is issued, and thirty (30) Days after the end of each calendar year thereafter until termination of this Decree pursuant to Section XVII, Defendant shall submit a report for the preceding six month period or calendar year, respectively, that summarizes the status of Defendant's application for a RCRA permit for the TMW and the status of compliance with the requirements of this Consent Decree.

b. The report also shall include a description of any non-compliance with the requirements of Section V of this Consent Decree and an explanation of the violation's likely cause and of the remedial steps taken, or to be taken, to prevent or minimize such violation. If the cause of a violation cannot be fully explained at the time the report is due, Defendant shall so state in the report. Defendant shall investigate the cause of the violation and shall then submit an amendment to the report, including a full explanation of the cause of the violation, within thirty (30) Days after Defendant becomes aware of the

ED_002099_0000079-00093

cause of the violation. Nothing in this Paragraph or the following Paragraph relieves Defendant of its obligation to provide the notice required by Section VIII of this Consent Decree (Force Majeure).

c. Whenever any violation of this Consent Decree or any other event affecting Defendant's performance under this Decree may pose an immediate threat to the public health or welfare or the environment, Defendant shall notify the Section Chief, Hazardous Waste Enforcement Section, Compliance Assurance and Enforcement Division, EPA, Region 6, 1445 Ross Avenue, Dallas, Texas 75202 by telephone to (214) 665-8006, by electronic or facsimile transmission to (214) 665-7446 as soon as possible, but no later than twenty-four (24) hours after Defendant first knew of the violation or event. This procedure is in addition to the requirements set forth in the preceding Paragraph.

d. All reports shall be submitted to the persons designated in Section XIII of this Consent Decree (Notices).

e. Each report submitted by Defendant under this Section shall be signed by an official of the submitting party and include the following certification:

> I certify under penalty of law that this document and all attachments were prepared under my direction or supervision in accordance with a system designed to assure that qualified personnel properly gather and evaluate the information submitted. Based on my inquiry of the person or persons who

> manage the system, or those persons directly responsible for gathering the information, the information submitted is, to the best of my knowledge and belief, true, accurate, and complete. I am aware that there are significant penalties for submitting false information, including the possibility of fine and imprisonment for knowing violations.

This certification requirement does not apply to emergency or similar notifications where compliance would be impractical.

f. The reporting requirements of this Consent Decree do not relieve Defendant of any reporting obligations required by RCRA or its implementing regulations, or by any other federal, state, or local law, regulation, permit, or other requirement.

g. Any information provided pursuant to this Consent Decree may be used by the United States in any proceeding to enforce the provisions of this Consent Decree and as otherwise permitted by law.

VII. STIPULATED PENALTIES

34. Defendant shall be liable for stipulated penalties to the United States for violations of this Consent Decree as specified below, unless excused under Section VIII (Force Majeure). A violation includes failing to perform any obligation required by the terms of this Decree, according to all applicable requirements of this Decree and within the specified time schedules established by or approved under this Decree.

ED_002099_0000079-00095

35. Late Payment of Civil Penalty. If Defendant fails to pay the civil penalty required to be paid under Section IV of this Decree (Civil Penalty) when due, Defendant shall pay a stipulated penalty of $3,000 per Day for each Day that the payment is late.

36. Compliance Milestones. The following stipulated penalties shall accrue per violation per Day for each violation of the requirements identified in the following subparagraphs:

a. Failure to within sixty (60) Days after the Effective Date of this Consent Decree, submit an application to the Director of ADEQ for a RCRA permit for the TMW as required by Paragraph 10 of this Consent Decree:

Penalty Per Violation Per Day	Period of Noncompliance
$1,000	1st through 14th Day
$3,000	15th through 30th Day
$10,000	31st Day and beyond

b. Failure to prepare and submit trial burn and risk burn plans and perform trial and risk burns as required by Paragraphs 12-24 of this Consent Decree:

Penalty Per Violation Per Day	Period of Noncompliance
$1,000	1st through 14th Day
$3,000	15th through 30th Day
$10,000	31st Day and beyond

ED_002099_0000079-00096

c. Operation of the TMW without a final permit after the time allowed in Paragraph 26 in this Consent Decree:

Penalty Per Violation Per Day	Period of Noncompliance
$10,000	1st through 14th Day
$25,000	15th Day and beyond

d. Failure to, within sixty (60) Days after the Effective Date of this Consent Decree, file with the State a notification and description of hazardous waste activity expressly related to the TMW operated at the Facility in accordance with Section 3010 of RCRA, 42 U.S.C. § 6930:

Penalty Per Violation Per Day	Period of Noncompliance
$1,000	1st through 14th Day
$1,500	15th through 30th Day
$2,500	31st Day and beyond

e. Failure to, within sixty (60) Days after the Effective Date of this Consent Decree, establish financial assurance for or closure of the TMW and related storage units at the Facility in accordance with Section 3004(a) of RCRA, 42 U.S.C. § 6924(a), and 40 C.F.R. § 264, Subpart H.

Penalty Per Violation Per Day	Period of Noncompliance
$1,000	1st through 14th Day
$3,000	15th through 30th Day
$10,000	31st Day and beyond

ED_002099_0000079-00097

37. Reporting Requirements. The following stipulated penalties shall accrue per violation per Day for each violation of the reporting requirements of Section VI of this Consent Decree:

Penalty Per Violation Per Day	Period of Noncompliance
$1,000	1st through 14th Day
$1,500	15th through 30th Day
$2,500	31st Day and beyond

38. The stipulated penalties under this Section shall begin to accrue on the Day after performance is due or on the Day a violation occurs, whichever is applicable, and shall continue to accrue until performance is satisfactorily completed or until the violation ceases. Stipulated penalties shall accrue simultaneously for separate violations of this Consent Decree.

39. Defendant shall pay any stipulated penalty within sixty (60) Days of receiving the United States' written demand, unless Defendant invokes the Dispute Resolution procedures under Section IX (Dispute resolution). A demand for the payment of the stipulated penalties will identify the particular violation(s) to which the stipulated penalty relates and the penalty amount that the United States is demanding for each violation (as best as can be estimated).

ED_002099_0000079-00098

40. The United States may in the unreviewable exercise of its discretion, reduce or waive stipulated penalties otherwise due it under this Consent Decree.

41. Stipulated penalties shall continue to accrue as provided in Paragraph 38, during any Dispute Resolution, but need not be paid until the following:

a. If the dispute is resolved by agreement or by a decision of EPA that is not appealed to the Court, Defendant shall pay accrued penalties determined to be owing, together with interest, to the United States within thirty (30)Days of the effective date of the agreement or the receipt of EPA's decision or order.

b. If the dispute is appealed to the Court and the United States prevails in whole or in part, Defendant shall pay all accrued penalties determined by the Court to be owing, together with interest, within sixty (60) Days of receiving the Court's decision or order, except as provided in subparagraph c, below.

c. If any Party appeals the District Court's decision, Defendant shall pay all accrued penalties determined to be owing, together with interest, within sixty (60) Days of receiving the final appellate court decision.

42. Defendant shall pay stipulated penalties owing to the United States in the manner set forth and with the confirmation

notices required by Paragraph 8, except that the transmittal letter shall state that the payment is for stipulated penalties and shall state for which violation(s) the penalties are being paid.

43. If Defendant fails to pay stipulated penalties according to the terms of this Consent Decree, Defendant shall be liable for interest on such penalties, as provided for in 28 U.S.C. § 1961, accruing as of the date payment became due. Nothing in this Paragraph shall be construed to limit the United States from seeking any remedy otherwise provided by law for Defendant's failure to pay any stipulated penalties.

44. Subject to the provisions of Section XI of this Consent Decree (Effect of Settlement/Reservation of Rights), the stipulated penalties provided for in this Consent Decree shall be in addition to any other rights, remedies, or sanctions available to the United States for Defendant's violation of this Consent Decree or applicable law. Where a violation of this Consent Decree is also a violation of RCRA or its implementing regulations, Defendant shall be allowed a credit, for any stipulated penalties paid, against any statutory penalties imposed for such violation.

VIII. FORCE MAJEURE

45. "Force Majeure" for purposes of this Consent Decree, is defined as any event arising from causes beyond the control of

ED_002099_0000079-00100

Defendant, of any entity controlled by Defendant, or of Defendant's contractors, that delays or prevents the performance of any obligation under this Consent Decree despite Defendant's best efforts under the circumstances to fulfill the obligation. The requirement that Defendant exercise "best efforts to fulfill the obligation" includes using best efforts to anticipate any potential Force Majeure event and best efforts to address the effects of any such event (a) as it is occurring and (b) after it has occurred to prevent or minimize any resulting delay to the greatest extent possible. "Force Majeure" does not include Defendant's financial inability to perform any obligation under this Consent Decree.

46. Defendant shall provide notice to the Section Chief, Hazardous Waste Enforcement Section, Compliance Assurance and Enforcement Division, EPA, Region 6, 1445 Ross Avenue, Dallas, Texas 75202 by telephone to (214) 665-8006, by electronic or facsimile transmission to (214) 665-7446 within seventy-two (72) hours of when Defendant first knew of a claimed Force Majeure event. Within fourteen (14) Days thereafter, Defendant shall provide in writing to EPA an explanation and description of the reasons for the delay; the anticipated duration of the delay; all actions taken or to be taken to prevent or minimize the delay; a schedule for implementation of any measures to be taken to prevent or mitigate the delay or the effect of the delay; and

ED_002099_0000079-00101

Defendant's rationale for attributing such delay to a force majeure event if it intends to assert such a claim; and a statement as to whether, in the opinion of Defendant, such event may cause or contribute to an endangerment to public health, welfare or the environment. Defendant shall include with any notice documentation supporting the claim that the delay was attributable to a Force Majeure. Failure to comply with the above requirements shall preclude Defendant from asserting any claim of Force Majeure for that event for the period of time of such failure to comply, and for any additional delay caused by such failure. Defendant shall be deemed to know of any circumstance of which Defendant, any entity controlled by Defendant, or Defendant's contractors had knowledge. For purposes of claiming a Force Majeure event related to Defendant's failure to receive a final RCRA permit for the TMW within one year after Defendant submits its initial application, Defendant must provide written notice and documentation to the Section Chief, Hazardous Waste Enforcement Section, Compliance Assurance and Enforcement Division, and the Chief of the Office of Regional Counsel, RCRA Enforcement Branch, EPA Region 6, not later than fourteen (14) Days after one year after Defendant submits its initial application that Defendant has not received a final RCRA permit for the TMW. Such written notice must provide an explanation and description of Defendant's submission of a timely and complete

application and other actions taken necessary to obtain such permit, but need not provide an explanation or description of the reasons for the delay or other matters referred to above in this Paragraph, if such reasons or other matters are beyond the knowledge of Defendant.

47. If EPA agrees that the delay or anticipated delay is attributable to a Force Majeure event, the time for performance of the obligations under this Consent Decree that are affected by the Force Majeure event will be extended by EPA for such time as is necessary to complete those obligations. An extension of the time for performance of the obligations affected by the Force Majeure event shall not, of itself, extend the time for performance of any other obligation. EPA will notify Defendant in writing of the length of the extension, if any, for performance of the obligations affected by the Force Majeure event.

48. If EPA does not agree that the delay or anticipated delay has been or will be caused by a Force Majeure event, EPA will notify Defendant in writing of its decision.

49. If Defendant elects to invoke the dispute resolution procedures set forth in Section IX (Dispute Resolution), it shall do so no later than thirty (30) Days after receipt of EPA's notice. In any such proceeding, Defendant shall have the burden of demonstrating by a preponderance of the evidence that the

delay or anticipated delay has been or will be caused by a Force Majeure event, that the duration of the delay or the extension sought was or will be warranted under the circumstances, that best efforts were exercised to avoid and mitigate the effects of the delay, and that the Defendant complied with the requirements of Paragraphs 45 and 46, above. If the Defendant carries this burden, the delay at issue shall be deemed not to be a violation by the Defendant of the affected obligation of this Consent Decree identified to EPA and the Court.

IX. DISPUTE RESOLUTION

50. Unless otherwise expressly provided for in this Consent Decree, the dispute resolution procedures of this Section shall be the exclusive mechanism to resolve disputes arising under or with respect to this Consent Decree.

51. Informal Dispute Resolution. Any dispute subject to Dispute Resolution under this Consent Decree shall first be the subject of informal negotiations. The dispute shall be considered to have arisen when Defendant serves the United States with a written Notice of Dispute, in accordance with Section XIII of this Consent Decree (Notices). Such Notice of Dispute shall state clearly the matter in dispute. The period of informal negotiations shall not exceed forty-five (45) Days from the date the dispute arises, unless that period is modified by written agreement of the Parties. If the Parties cannot resolve a

dispute by informal negotiations, then the position advanced by the United States shall be considered binding unless, within forty-five (45) Days after the conclusion of the informal negotiation period, Defendant invokes formal dispute resolution procedures as set forth below.

52. Formal Dispute Resolution. Defendant shall invoke formal dispute resolution procedures, within the time period provided in the preceding Paragraph, by serving on the United States a written Statement of Position regarding the matter in dispute. The Statement of Position shall include, but need not be limited to, any factual data, analysis, or opinion supporting Defendant's position and any supporting documentation relied upon by Defendant.

53. The United States shall serve its Statement of Position within forty-five (45) Days of receipt of Defendant's Statement of Position. The United States' Statement of Position shall include, but need not be limited to, any factual data, analysis, or opinion supporting that position and any supporting documentation relied upon by the United States. If the United States does not accept Defendant's position, the United States' Statement of Position shall be binding on Defendant, unless Defendant files a motion for judicial review of the dispute in accordance with the following Paragraph.

ED_002099_0000079-00105

54. Defendant may seek judicial review of the dispute by filing with the Court and serving on the United States a motion requesting judicial resolution of the dispute. The motion must be filed within forty-five (45) Days of receipt of the United States' Statement of Position pursuant to the preceding Paragraph. The motion shall contain a written statement of Defendant's position on the matter in dispute, including any supporting factual data, analysis, opinion, or documentation, and shall set forth the relief requested and any schedule within which the dispute must be resolved for orderly implementation of the Consent Decree.

55. The United States shall respond to Defendant's motion within the time period allowed by the Local Rules of this Court. Defendant may file a reply memorandum, to the extent permitted by the Local Rules.

56. The Court shall decide all disputes pursuant to applicable principles of law for resolving such disputes. In their initial filings with the Court under Paragraphs 55 and 56, the Parties shall state their respective positions as to the applicable standard of law for resolving the particular dispute. The Court shall not draw any inference nor establish any presumptions adverse to any Party as a result of invocation of this Section or the Parties' inability to reach agreement.

ED_002099_0000079-00106

57. The invocation of dispute resolution procedures under this Section shall not, by itself, extend, postpone, or affect in any way any obligation of Defendant under this Consent Decree, unless and until final resolution of the dispute so provides. Stipulated penalties with respect to the disputed matter shall continue to accrue from the first Day of noncompliance, but payment shall be stayed pending resolution of the dispute as provided in Paragraph 41. If Defendant does not prevail on the disputed issue, stipulated penalties shall be assessed and paid as provided in Section VII (Stipulated Penalties).

X. INFORMATION COLLECTION AND RETENTION

58. The United States and its representatives, including attorneys, contractors, and consultants, shall have the right of entry into the Facility at all reasonable times, upon presentation of credentials, to:

a. monitor the progress of activities required under this Consent Decree;

b. verify any data or information submitted to the United States in accordance with the terms of this Consent Decree;

c. obtain samples and, upon request, splits and results of any samples taken by Defendant or its representatives, contractors, or consultants;

ED_002099_0000079-00107

d. obtain documentary evidence, including photographs and similar data; and

e. assess Defendant's compliance with this Consent Decree.

59. Upon request, EPA shall provide Defendant splits and results of any samples taken by EPA.

60. Until two years after the termination of this Consent Decree, Defendant shall retain (in paper or electronic form), and shall instruct its contractors and agents to preserve, all non-identical copies of all documents, records, or other information (including documents, records, or other information in electronic form) in its or its contractors' or agents' possession or control, or that come into its or its contractors' or agents' possession or control, and that relate to Defendant's performance of its obligations under this Consent Decree. This information-retention requirement shall apply regardless of any contrary corporate or institutional policies or procedures. At any time during this information-retention period, upon request by the United States, Defendant shall make available to EPA copies of any documents, records, or other information required to be maintained under this Paragraph. Notwithstanding the provisions of this Paragraph, Defendant may request in writing permission from EPA to not preserve, to not maintain, or to destroy certain specified categories of documents. Defendant's obligations will

remain unchanged, however, unless and until EPA issues written approval of the request, which may or may not, in EPA's discretion, include a waiver of Defendant's obligations under this Paragraph.

61. At the conclusion of the information-retention period provided in the preceding Paragraph, Defendant shall notify the United States at least ninety (90) Days prior to the destruction of any documents, records, or other information subject to the requirements of the preceding Paragraph and, upon request by the United States, Defendant shall make any such documents, records, or other information available to EPA for inspection, copying or retention. Defendant may assert that certain documents, records, or other information is privileged under the attorney-client privilege or any other privilege recognized by federal law. If Defendant asserts such a privilege, in lieu of providing documents, it shall notify the United States that such a claim is being made, and upon request, shall provide the following: (1) the title of the document, record, or information; (2) the date of the document, record, or information; (3) the name and title of each author of the document, record, or information; (4) the name and title of each addressee and recipient; (5) a description of the subject of the document, record, or information; and (6) the privilege asserted by Defendant. However, no documents, records, or other information created or generated pursuant to

the requirements of this Consent Decree shall be withheld on grounds of privilege.

62. Defendant may also assert that information required to be provided under this Section is protected as CBI under 40 C.F.R. Part 2. As to any information that Defendant seeks to protect as CBI, Defendant shall follow the procedures set forth in 40 C.F.R. Part 2.

63. This Consent Decree in no way limits or affects any right of entry and inspection, or any right to obtain information, held by the United States pursuant to applicable federal or State laws, regulations, or permits, nor does it limit or affect any duty or obligation of Defendant to maintain documents, records, or other information imposed by applicable federal or state laws, regulations, or permits.

XI. EFFECT OF SETTLEMENT/RESERVATION OF RIGHTS

64. This Consent Decree resolves the civil claims of the United States for the violations alleged in the Complaint and the Amended Complaint filed in this action through the Effective Date of this Consent Decree.

65. The United States reserves all legal and equitable remedies available to enforce the provisions of this Consent Decree, except as expressly stated in Paragraph 64. This Consent Decree shall not be construed to limit the rights of the United States to obtain penalties or injunctive relief under RCRA or its

ED_002099_0000079-00110

implementing regulations, or under other federal or State laws, regulations, or permit conditions, except as expressly specified in Paragraph 64. The United States further reserves all legal and equitable remedies to address any imminent and substantial endangerment to the public health or welfare or the environment arising at, or posed by, Defendant's Facility under Section 7003 of RCRA, 42 U.S.C. §§ 6973.

66. In any subsequent administrative or judicial proceeding initiated by the United States for injunctive relief, civil penalties, other appropriate relief relating to the Facility, the Defendant shall not assert, and may not maintain, any defense or claim based upon the principles of waiver, res judicata, collateral estoppel, issue preclusion, claim preclusion, claim-splitting, or other defenses based upon any contention that the claims raised by the United States in the subsequent proceeding were or should have been brought in the instant case, except with respect to claims that have been specifically resolved pursuant to Paragraph 64 of this Section.

67. This Consent Decree is not a permit, or a modification of any permit, under any federal, State, or local laws or regulations. Defendant is responsible for achieving and maintaining compliance with all applicable federal, State, and local laws, regulations, and permits; and Defendant's compliance with this Consent Decree shall be no defense to any action

ED_002099_0000079-00111

commenced pursuant to any such laws, regulations, or permits, except as set forth herein. The United States does not, by its consent to the entry of this Consent Decree, warrant or aver in any manner that Defendant's compliance with any aspect of this Consent Decree will result in compliance with RCRA, or with any other provisions of federal, State, or local laws, regulations, or permits.

68. This Consent Decree does not limit or affect the rights of Defendant or of the United States against any third parties, not party to this Consent Decree, nor does it limit the rights of third parties, not party to this Consent Decree, against Defendant, except as otherwise provided by law.

69. This Consent Decree shall not be construed to create rights in, or grant any cause of action to, any third party not party to this Consent Decree, or to release or waive any claim, cause of action, demand, or defense in law or equity that any party to this Consent Decree may have against any person(s) or entity not a party to this Consent Decree.

XII. COSTS

70. The Parties shall bear their own costs of this action, including attorneys' fees, except that the United States shall be entitled to collect the costs (including attorneys' fees) incurred in any action necessary to collect any portion of the

ED_002099_0000079-00112

civil penalty or any stipulated penalties due but not paid by Defendant.

XIII. NOTICES

71. Unless otherwise specified herein, whenever notifications, submissions, or communications are required by this Consent Decree, they shall be made in writing and addressed as follows:

To the United States:

Chief, Environmental Enforcement Section
Environment and Natural Resources Division
U.S. Department of Justice
Box 7611 Ben Franklin Station
Washington, D.C. 20044-7611
Re: DOJ No. 90-7-1-08902

and

To EPA:

Associate Director
Compliance Assurance and Enforcement Division (RCRA Enforcement Division)
U.S. Environmental Protection Agency
Region 6
1445 Ross Avenue
Dallas, Texas 75202

Multimedia Planning and Permitting Division (RCRA Permits Division)
U.S. Environmental Protection Agency
Region 6
1445 Ross Avenue
Dallas, Texas 75221

To Defendant:

Rineco Chemical Industries, Inc.
P.O. Box 729
Benton, Arkansas 72018

ED_002099_0000079-00113

72. Any Party may, by written notice to the other Parties, change its designated notice recipient or notice address provided above.

73. Notices submitted pursuant to this Section shall be deemed submitted upon mailing, unless otherwise provided in this Consent Decree or by mutual agreement of the Parties in writing.

XIV. EFFECTIVE DATE

74. The Effective Date of this Consent Decree shall be the date upon which this Consent Decree is entered by the Court or a motion to enter the Consent Decree is granted, whichever occurs first, as recorded on the Court's docket.

XV. RETENTION OF JURISDICTION

75. The Court shall retain jurisdiction over this case until termination of this Consent Decree, for the purpose of resolving disputes arising under this Decree or entering orders modifying this Decree, pursuant to Sections IX and XVI, or effectuating or enforcing compliance with the terms of this Decree.

XVI. MODIFICATION

76. The terms of this Consent Decree may be modified only by a subsequent written agreement signed by all the Parties. Where the modification constitutes a material change to this Decree, it shall be effective only upon approval by the Court.

ED_002099_0000079-00114

77. Any disputes concerning modification of this Decree shall be resolved pursuant to Section IX of this Decree (Dispute Resolution)provided, however, that, instead of the burden of proof provided by Paragraph 56, the Party seeking the modification bears the burden of demonstrating that it is entitled to the requested modification in accordance with Federal Rule of Civil Procedure 60(b).

XVII. TERMINATION

78. After Defendant has complied with the requirements of Section V of this Consent Decree (Compliance Requirements), has thereafter maintained satisfactory compliance with this Consent Decree and the RCRA permit for the TMW issued by the Director of ADEQ for a period of one year, and has paid the civil penalty and any accrued stipulated penalties as required by this Consent Decree, Defendant may serve upon the United States a Request for Termination, stating that Defendant has satisfied those requirements, together with all necessary supporting documentation.

79. Following receipt by the United States of Defendant's Request for Termination, the Parties shall confer informally concerning the Request and any disagreement that the Parties may have as to whether Defendant has satisfactorily complied with the requirements for termination of this Consent Decree. If the United States agrees that the Decree may be terminated, the

Parties shall submit, for the Court's approval, a joint stipulation terminating the Decree.

80. If the United States does not agree that the Decree may be terminated, Defendant may invoke Dispute Resolution under Section IX of this Decree. However, Defendant shall not seek Dispute Resolution of any dispute regarding termination, under Paragraph 52 of Section IX, until thirty (30) Days after service of its Request for Termination.

XVIII. PUBLIC PARTICIPATION

81. This Consent Decree shall be lodged with the Court for a period of not less than thirty (30) Days for public notice and comment in accordance with 28 C.F.R. § 50.7. The United States reserves the right to withdraw or withhold its consent if the comments regarding the Consent Decree disclose facts or considerations indicating that the Consent Decree is inappropriate, improper, or inadequate. Defendant consents to entry of this Consent Decree without further notice and agrees not to withdraw from or oppose entry of this Consent Decree by the Court or to challenge any provision of the Decree, unless the United States has notified Defendant in writing that it no longer supports entry of the Decree.

ED_002099_0000079-00116

XIX. SIGNATORIES/SERVICE

82. Each undersigned representative of Defendant and the Assistant Attorney General for the Environment and Natural Resources Division of the Department of Justice certifies that he or she is fully authorized to enter into the terms and conditions of this Consent Decree and to execute and legally bind the Party he or she represents to this document.

83. This Consent Decree may be signed in counterparts, and its validity shall not be challenged on that basis. Defendant agrees to accept service of process by mail with respect to all matters arising under or relating to this Consent Decree and to waive the formal service requirements set forth in Rules 4 and 5 of the Federal Rules of Civil Procedure and any applicable Local Rules of this Court including, but not limited to, service of a summons.

XX. INTEGRATION

84. This Consent Decree constitutes the final, complete, and exclusive agreement and understanding among the Parties with respect to the settlement embodied in the Decree and supercedes all prior agreements and understandings, whether oral or written, concerning the settlement embodied herein. No other document, nor any representation, inducement, agreement, understanding, or promise, constitutes any part of this Decree or the settlement it

ED_002099_0000079-00117

represents, nor shall it be used in construing the terms of this Decree.

XXI. FINAL JUDGMENT

85. Upon approval and entry of this Consent Decree by the Court, this Consent Decree shall constitute a final judgment of the Court as to the United States and the Defendant. The Court finds that there is no just reason for delay and therefore enters this judgment as a final judgment under Fed. R. Civ. P. 54 and 58.

Dated and entered this 16th day of August, 2010.

Susan Webber Wright
UNITED STATES DISTRICT COURT JUDGE

ED_002099_0000079-00118

FOR THE UNITED STATES:

Dated: 4/27/10

IGNACIA S. MORENO
Assistant Attorney General
Environment and Natural Resources Division
United States Department of Justice

Dated: 5/13/10

RICHARD GLADSTEN
Senior Counsel
Environmental Enforcement Section
Environment and Natural Resources Division
United States Department of Justice
P.O. Box 7611
Washington, D.C. 20044-7611
(202) 514-1711

United States v. Rineco Chemical Industries, Inc.
Civil Action No. 4-07-CV 01189SWW
Consent Decree

FOR THE ENVIRONMENTAL PROTECTION AGENCY:

Date: 5/19/10

for AL ARMENDARIZ
Regional Administrator
U.S. Environmental Protection
Agency, Region VI
1445 Ross Avenue
Dallas, Texas 75202-2733

Date: 5/17/10

TERRY SYKES
RCRA Enforcement Branch
U.S. Environmental Protection
Agency, Region 6
1445 Ross Avenue, Suite 1200
Dallas, Texas 75202-2733

FOR DEFENDANT RINECO CHEMICAL INDUSTRIES, INC.

Date: 12/7/2009

LARRY WILLIAMS
Rineco Chemical Industries, Inc.
819 Vulcan Road
Benton, Arkansas 72015

FILED
U.S. DISTRICT COURT
EASTERN DISTRICT ARKANSAS
JAN 0 3 2012
JAMES W. McCORMACK, CLERK
By: _____ DEP CLERK

IN THE UNITED STATES DISTRICT COURT
FOR THE EASTERN DISTRICT OF ARKANSAS
WESTERN DIVISION

UNITED STATES OF AMERICA,	)	
	)	
Plaintiff,	)	
	)	
	)	**Civil Action No. 4-07-CV 01189SWW**
	)	
RINECO CHEMICAL INDUSTRIES, INC.	)	
	)	
	)	
Defendant.	)	
	)	

ORDER ENTERING MODIFICATION OF CONSENT DECREE

Upon consideration of the United States' Unopposed Motion [doc.#105] for Entry of the Modification of the Consent Decree between the United States and the Rineco Chemical Industries, Inc. in the above-captioned case, there being no opposition thereto, and for good cause shown, the United States' Motion be and hereby is GRANTED and the Modification of the Consent Decree is entered. The Court has signed the Modification of the Consent Decree reflecting its approval of the proposed Modification of the Consent Decree.

SO ORDERED THIS 3rd DAY OF JANUARY 2012.

Susan Webber Wright
UNITED STATES DISTRICT JUDGE

FILED
U.S. DISTRICT COURT
EASTERN DISTRICT ARKANSAS

JAN 0 3 2012

JAMES W. McCORMACK, CLERK
By: _____ DEP CLERK

IN THE UNITED STATES DISTRICT COURT
FOR THE EASTERN DISTRICT OF ARKANSAS
WESTERN DIVISION

UNITED STATES OF AMERICA, Plaintiff,	)	
v.	)	Civil Action No. 4-07-CV 01189SWW
RINECO CHEMICAL INDUSTRIES, INC. Defendant.	)	

MODIFICATION OF CONSENT DECREE

On August 16, 2010, this Court entered Consent Decree (Doc. 102) between the United States and the Rineco Chemical Industries, Inc. ("Rineco") in the above-captioned case. In accordance with Paragraph 76 of the Consent Decree, the parties may modify the terms of the Consent Decree by written agreement of the parties. Where the modification constitutes a material change to the Decree, the modification shall be effective only upon approval by the Court.

Based on the agreement of the parties, and for good cause shown, the following Modification to the Consent Decree is approved:

Part 1. Interim Operating Conditions

The following interim operating restrictions and monitoring requirements (Interim Operating Conditions), which are in addition to any other requirements or restrictions in the Consent Decree, shall apply to Rineco's operations authorized under the Consent Decree between October 15, 2011, through the date that: (1) Rineco's authorization under the Consent Decree is terminated or ceases, as provided for under the Consent Decree or herein, or (2) a final RCRA Permit is issued (in which case the permit will provide operating conditions), whichever is earlier.

1. No later than October 31, 2011, Rineco shall submit to ADEQ and EPA proposed interim limits (with supporting data and calculations) on the TMW waste stream for the following parameters: waste feed limit, ash content, total chlorine and all risk assessment metals: antimony, arsenic, barium, beryllium, cadmium, chromium, lead, mercury, silver and thallium. Upon EPA's approval of such limits, and continuing through the date that Rineco conducts the Trial Burn referenced in Milestone 2, below, Rineco shall conduct daily representative sampling of its waste stream to demonstrate compliance with these interim TMW waste stream limits.

2. No later than January 1, 2012, Rineco shall install CO, HC, and Oxygen CEMS in each TOU unit, and no later than January

9, 2012, Rineco shall complete the calibration of each of the CEMS. Upon completion of the CEMS installation and calibration, Rineco shall use the CEMS to continuously measure CO, HC and Oxygen at each TOU stack. Rineco shall use the CEMS measurements to demonstrate compliance with the following emissions limits for each TOU: 100 ppm CO (by volume) and 10 ppm HC (by volume reported as propane), over an hourly rolling average, dry basis, corrected to 7 percent oxygen.

3. Beginning November 1, 2011, and continuing through the date Rineco submits the Notice of Compliance referenced in Milestone 3, below (the "Notice of Compliance"), Rineco shall conduct monthly sampling and analysis of dioxin/furans on all of the following "exit/discharge" points: (i) Venturi scrubbers V1 through V6 effluent stream, (ii) contents of Tank T-401, (iii) recovery metals sent to recycler, (iv) sludge from the wet gas separator, and (v) char or ash from the TMW.

4. Beginning February 1, 2012, and continuing through the date Rineco submits the Notice of Compliance, Rineco shall conduct monthly stack sampling for dioxins/furans at each TOU stack using Method 0023A to demonstrate compliance with the following emissions limit: 0.40 ng TEQ/dscm standard corrected to 7 percent oxygen.

5. Beginning February 1, 2012, and continuing through the date Rineco submits the Notice of Compliance, Rineco shall

conduct monthly sampling for particulate matter (PM) as follows: Measurement for PM at each TOU stack will be conducted using Method 5/202 to demonstrate compliance with the following emissions limit: 0.013 gr/dscf standard corrected to 7 percent oxygen.

6. Beginning on the dates specified in the attached Table F-4 (and any subsequent approved revisions of these dates), and continuing through the date Rineco completes the Trial Burn, Rineco shall comply with the Operating Parameter Limits ("OPL") and Automatic Waste Feed Cutoff ("AWFCO") limits specified in the attached Table F-4 (and any subsequent approved revisions of these requirements). Rineco shall specify total waste feed rate, metal and total chlorine feed limits in a table in its NOD response referenced in Milestone 1, below.

7. Beginning January 9, 2012 and continuing thereafter, Rineco must institute Automatic Waste Feed Cut Offs to immediately cease waste feed in the event the CO, or HC emissions limits referenced in Paragraph 2 above are not met.

8. Beginning January 9, 2012 and continuing thereafter, Rineco shall measure stack gas flow rate on a continuous basis.

9. Once the Trial Burn is conducted, Rineco will comply with the OPLs and AWFCO limits established during the Trial Burn until Rineco submits the Notice of Compliance.

10. Once Rineco submits the Notice of Compliance, through the time that a final RCRA Permit is issued, Rineco shall comply with the OPLs, AWFCO requirements and emission limits proposed in the Notice of Compliance.

11. No later than October 31, 2011, Rineco shall permanently shut down any TOU unit for which it will not perform a Trial Burn within the timeline specified in Milestone 2, below.

12. Rineco shall maintain all electronic operating records, hard copies of field logs, and sampling and analytical results for the operations during the period between October 15, 2011 and the issuance of a final RCRA Permit.

13. Rineco shall submit to both ADEQ and EPA, all monitoring, sampling and analytical results specified in Paragraphs 1, 3, 4, or 5, above, within 45 days of the monitoring or sampling.

14. Rineco shall submit to both EPA and ADEQ, all monitoring and AWFCO exceedences of the requirements of Paragraphs 2, 6, or 7, above, no later than the tenth (10th) day of each month for the preceding month.

15. All analyses required herein shall be performed by a laboratory pre-approved by ADEQ to perform such analyses.

Part 2. Interim Authorization and Milestones

Rineco's authorization under the Consent Decree after October 14, 2011, is expressly conditioned on Rineco completing each of the following milestone deadlines to the satisfaction of ADEQ and EPA.

Milestone 1. Submission, Revision and Approval of Required Plan

Rineco has submitted the following plans, dated September 29, 2011, to ADEQ and EPA:

1. Revised Trial Burn Plan
2. Waste Analysis Plan incorporating requirements specified in 40 CFR § 270.62(b)
3. Quality Assurance Project Plan
4. CEMS (or CMS) Performance Evaluation Plan
5. Start-up, Shut-down and Malfunction Plan

ADEQ/EPA will review these plans and issue only one Notice of Deficiency (NOD) to Rineco. Rineco must provide an approvable response to ADEQ and EPA within 30 days of receipt of the NOD. In the event that Rineco fails to submit a timely and good-faith approvable NOD response, Rineco's authorization to operate the TMW shall terminate on the NOD response deadline (30 days from the date of receipt of the NOD).

Milestone 2. Trial Burn

By no later than January 27, 2012, Rineco must complete the

Trial Burn and collect all necessary data for the purpose of risk assessment.

Rineco must stop feeding hazardous waste to the TMW as soon it knows during or anytime after the trial burn that it has exceeded the MACT EEE emissions limits or operating parameter limits (OPLs), or any emission limits or OPLs specified in the Interim Operating Conditions, above.

In the event that Rineco fails to complete the Trial Burn or to collect the data as described above by January 27, 2012, Rineco's authorization to operate the TMW shall terminate on January 27, 2012.

Milestone 3. Notice of Compliance (NOC)

By no later than April 27, 2012, Rineco must deliver to ADEQ and EPA a Notice of Compliance and the test results including the field data, the analytical data and any other data or calculations supporting the emissions calculation and the OPLs proposed in the Notice of Compliance.

In the event that Rineco fails to deliver a complete and approvable Notice of Compliance and testing results as described above, Rineco's authorization to operate the TMW shall terminate on April 27, 2012.

Milestone 4. Risk Assessment report

By no later than April 27, 2012, Rineco must deliver to ADEQ and EPA a complete and approvable Risk Assessment report

consistent with the Human Health Risk Assessment Protocol for Hazardous Waste Combustion facilities, OSWER, EPA-R-05-006, (September 2005) and Paragraph 28 of the Consent Decree.

In the event that Rineco fails to deliver a timely Risk Assessment report as described above, Rineco's authorization to operate the TMW shall terminate on April 27, 2012.

Milestone 5. Approval of NOC and Issuance of Final RCRA Permit

ADEQ and EPA will review the NOC and issue only one Notice of Deficiency (NOD) to Rineco. Rineco must provide an approvable response to ADEQ and EPA within 30 days of receipt of the NOD. In the event that Rineco fails to submit a timely and a good-faith approvable NOD response, Rineco's authorization to operate the TMW shall terminate on the deadline for such performance (30 days from the date of the NOD).

By no later than October 14, 2012, Rineco must complete all remaining permitting requirements and have a final RCRA permit authorizing it to operate the TMW. In the event that ADEQ does not issue a final RCRA permit to Rineco as described above by October 14, 2012, any remaining authorization under this Consent Decree to operate the TMW shall cease and Rineco shall stop operating the TMW, except as that time is enlarged under Paragraphs 29, 45, 46, 47, or 76 of the Consent Decree.

Part 3. Stipulated Penalties

In addition to any other remedy provided herein or in the Consent Decree, Rineco shall be liable for, and shall pay, stipulated penalties to the United States for the violation of the compliance milestones contained herein. Such stipulated penalties shall be subject to the procedures and requirements provided in Part VII of the Consent Decree.

The following stipulated penalties shall accrue per violation per day for each violation described below:

1. Operation of the TMW after failing to meet any of the Milestones (Milestones 1-5) provided herein:

Penalty Per Violation Per Day	Period of Noncompliance
$10,000	1st through 14th day
$25,000	15th day and beyond

Approved and entered this 3rd day of January, 2012.

UNITED STATES DISTRICT COURT JUDGE

FOR THE UNITED STATES:

Dated: 12/14/11

RICHARD GLADSTEN
Senior Counsel
Environmental Enforcement Section
Environment and Natural Resources Division
United States Department of Justice
P.O. Box 7611
Washington, D.C. 20044-7611
(202) 514-1711

FOR THE ENVIRONMENTAL PROTECTION AGENCY:

Date: 12·2·11

JOHN BLEVINS,
Director
Compliance Assurance and
Enforcement Division
U.S. Environmental Protection
Agency, Region 6
1445 Ross Avenue, Suite 1200
Dallas, Texas 75202-2733

FOR DEFENDANT RINECO CHEMICAL INDUSTRIES, INC.

Date: November 16, 2011

LARRY WILLIAMS
Rineco Chemical Industries, Inc.
819 Vulcan Road
Benton, Arkansas 72015

Appendix D-VII

Table F-4
TMW Trial Burn Operating Regimen

Item	Unit	Parameter	AWFCO limit	Target Value	Completion Schedule
1	Fugitives Control Vent (24" Duct)	Pressure (in. w.c.)	0	-0.5	10-24-2011
2	Feed Hopper / Conveyor Fugitive	Fugitive VOC Emissions (ppm)	0	0	11-11-2011
3	Cooling Screws #1, #2; Conveyor #1, #2; Shaker & Magnetic Separator	Fugitive VOC Emissions (ppm)	0	0	11-11-2011
4	Electric Heater (Electroscrew)	Exhaust Gas Max. Temperature (deg F) @ Active Venturi (V-3 or V-4)	1,500	1,100	10-15-2011
5	"	Exhaust Gas Min. Temperature (deg F) @ Active Venturi (V-3 or V-4)	400	400	10-15-2011
6	Venturi 1 thru 5 (V1 thru V5)	Min. Pressure Drop (Gas side) (in. w.c.)[1]	-12	0	10-24-2011
7	"	Min. Inlet Pressure (psi)	0	2	10-24-2011
8	"	Min. Blowdown Rate (total valve actuations/day)[2]	4	4	10-24-2011
9	"	Min. Liquid Level (in.)	-2	0	11-11-2011
10	Venturi 6 (V6)	Min. Pressure Drop (Gas side) (in. w.c.)[3]	-12	6	11-11-2011
11	"	Min. Inlet Pressure (psi)	0	2	11-11-2011
12	"	Min. Blowdown Rate (total valve actuations/day)[2]	0	0	10-24-2011
13	"	Min. Liquid Level (in.)	-2	0	11-11-2011
14	"	Max. Exhaust Gas Temperature (deg F)	130	130	10-15-2011
15	Wet Dust Collector	Min. Pressure Drop (in. w.c.)	0.5	0.5	11-11-2011
16	TOU-102	Min. Combustion Temperature (deg F)	1,500	1,500	10-15-2011
17	"	Max. CO Exhaust Gas (ppm)	100	100	01-09-2012
18	"	Max. HC Exhaust Gas (ppm)	10	10	01-09-2012
19	"	Maximum Stack Gas Velocity (fps)	39	33	01-09-2012
20	TOU-103	Min. Combustion Temperature (deg F)	1,500	1,500	10-15-2011
21	"	Max. CO Exhaust Gas (ppm)	100	100	01-09-2012
22	"	Max. HC Exhaust Gas (ppm)	10	10	01-09-2012
23	"	Maximum Stack Gas Velocity (fps)	39	33	01-09-2012

NOTES:

[1] Pressure drop (ΔP) is measured as pressure measured at cooling screws #1 or #2 [i.e., P SCREW_N or P SCREW_S, a or b) minus pressure measured at the inlet of V6 (i.e., P 12N_LINE).

[2] Valve actuations measured at valves XV Vx-PURGE (x = 1, 2, 3, 4, 5 and 6) (Re: Figure 029C).

[3] Pressure drop (ΔP) is measured as pressure at the inlet of V6 (i.e., P 12N_LINE) minus pressure at the inlet to the blowers [i.e., P 3IN_LINE).

EXHIBIT 3

CWM Lake Charles Comprehensive Performance Test Plan for Thermal Desorption Unit, November 2017 [with annotations by C. Palmer 7/15/2018]

Annotations by C. Palmer 7/15/2018

WASTE MANAGEMENT

CHEMICAL WASTE MANAGEMENT, INC.

LAKE CHARLES FACILITY

HAZARDOUS WASTE OPERATING PERMIT EPA ID NO. LAD 000 777 201 AGENCY INTEREST NO. 742

COMPREHENSIVE PERFORMANCE TEST PLAN FOR THERMAL DESORPTION UNIT

NOVEMBER 2017

PREPARED BY:

pivotal engineering

Coterie ENVIRONMENTAL

TABLE OF CONTENTS

1.0 Introduction 1-1
- 1.1 Facility Overview 1-1
- 1.2 Unit Overview 1-2
- 1.3 Regulatory Overview 1-2
- 1.4 Comprehensive Performance Test Overview 1-3
- 1.5 Operating Parameter Limits Overview 1-4
- 1.6 Reference Documents 1-5
- 1.7 Comprehensive Performance Test Organization 1-5
- 1.8 Document Revision History 1-5

2.0 Operating Parameter Limits 2-1
- 2.1 Maximum Hazardous Waste Feed Rate 2-1
- 2.2 Maximum Treatment Drum Pressure 2-1
- 2.3 Minimum Thermal Oxidizer Unit Temperature 2-2
- 2.4 Maximum Flue Gas Flow Rate 2-2
- 2.5 Minimum Venturi Scrubber Pressure Drop 2-2
- 2.6 Minimum Packed Bed Scrubber Liquid to Gas Ratio 2-2
- 2.7 Minimum Packed Bed Scrubber Liquid Flow Rate 2-3
- 2.8 Minimum Packed Bed Scrubber Liquid pH 2-3
- 2.9 Minimum Rotary Drum Temperature 2-3
- 2.10 Maximum Mercury Feed Rate 2-3
- 2.11 Maximum Chlorine Feed Rate 2-3
- 2.12 Maximum Semivolatile Metals Feed Rate 2-4
- 2.13 Maximum Low Volatile Metals Feed Rate 2-4

3.0 Feedstream Characterization 3-1
- 3.1 Waste Streams 3-1
- 3.2 Natural Gas 3-1
- 3.3 Waste Chosen for the Comprehensive Performance Test 3-1

4.0 Engineering Description 4-1
- 4.1 Solids Feed System 4-1
- 4.2 Rotary Drum 4-2
- 4.3 Vapor Recovery System 4-2
- 4.4 Process Blower 4-3
- 4.5 Thermal Oxidizer Unit 4-3
- 4.6 Quench 4-3
- 4.7 Venturi Scrubber 4-4
- 4.8 Packed Bed Scrubber 4-4
- 4.9 Induced Draft Fan 4-4
- 4.10 Stack 4-4

5.0 Continuous Monitoring Systems 5-1
- 5.1 Continuous Process Monitoring Systems 5-1

ED_002099_0000079-00138

5.2 Continuous Emissions Monitoring Systems 5-1
5.3 Automatic Waste Feed Cutoff System 5-2
5.4 Emergency Shutdown System 5-2
6.0 Comprehensive Performance Test Operations 6-1
6.1 Test Condition 6-1
6.2 Principal Organic Hazardous Constituent 6-2
6.3 Metals Feed Rate Extrapolation 6-4
6.4 Waste Spiking 6-5
6.5 Test Materials and Quantities 6-7
6.6 Test Schedule 6-7
7.0 Sampling and Analysis 7-1
7.1 Waste Sampling and Analysis 7-1
7.2 Natural Gas Sampling and Analysis 7-1
7.3 Spiking Materials Sampling and Analysis 7-2
7.4 Stack Gas Sampling and Analysis 7-2

LIST OF TABLES

Table 1-1 Applicable Emission Standards for Thermal Desorber Unit 1-3
Table 1-2 Target Operating Parameter Limits Summary 1-4
Table 1-3 Document Revision History 1-6
Table 2-1 Target Operating Parameter Limits 2-1
Table 3-1 Target Waste Streams 3-1
Table 5-1 Continuous Process Monitoring Systems 5-1
Table 6-1 Test Condition 6-2
Table 6-2 Principal Organic Hazardous Constituent Quantity 6-4
Table 6-3 Feed Rate Extrapolation 6-5
Table 6-4 Waste Spiking 6-6
Table 6-5 Test Material Quantities 6-7
Table 6-6 Trial Burn Schedule 6-8
Table 7-1 Waste Sampling and Analysis 7-1
Table 7-2 Stack Gas Sampling and Analysis 7-2

LIST OF FIGURES

Figure 4-1 Process Schematic 4-1
Figure 6-1 Spiking System Schematic 6-6

LIST OF APPENDICES

Appendix A: Quality Assurance Project Plan
Appendix B: Continuous Monitoring Systems Performance Evaluation Test Plan

ED_002099_0000079-00139

1.0 INTRODUCTION

This comprehensive performance test (CPT) plan is being submitted by Chemical Waste Management, Inc., (CWM) for the Thermal Desorption Unit (TDU) to be operated at the Lake Charles Facility. The TDU is subject to the Resource Conservation and Recovery Act (RCRA) standards codified in Title 40 Code of Federal Regulations (CFR) Part 264 Subpart X and Louisiana Administrative Code (LAC) Title 33 Part V Chapter 32. The applicable operating requirements for the TDU are specified in Section V.G of Hazardous Waste Operating Permit No. LAD000777201-0P-RN-MO-I.

This plan describes the initial CPT to be performed for the TDU. The plan is designed to demonstrate compliance with the performance standards established under 40 CFR Part 264 Subpart X and LAC 33:V.Chapter 32, as specified in Condition V.G.10.a of the permit. It is being submitted in accordance with Condition V.G.10.b.i.4 of the permit.

1.1 FACILITY OVERVIEW

The CWM Lake Charles Facility is a commercial hazardous waste treatment, storage, and disposal facility located on a 390-acre tract near Carlyss, Louisiana. John Brannon Road divides the facility into two parts: 270 acres to the west and 120 acres to the east. Incoming waste is currently treated as required and then disposed in Hazardous Waste Landfill Cell 8, located on the west side of John Brannon Road, adjacent to the other operational areas of the facility. CWM has added two new technologies to the current operations at the Lake Charles Facility. These new technologies offer CWM opportunities to treat waste and recover oil for resale. The two new systems consist of Oil Recovery Units and the TDU.

The street address of the CWM Lake Charles Facility is:

Chemical Waste Management, Inc.
Lake Charles Facility
7170 John Brannon Road
Carlyss, Calcasieu Parish, Louisiana 70665

All correspondence should be directed to the following facility contact:

Benjamin Dabadie
Environmental Manager
Chemical Waste Management, Inc.
Lake Charles Facility
7170 John Brannon Road
Sulphur, Louisiana 70665

Phone: 337-583-3676
Email: bdabadie@wm.com

1.2 Unit Overview

The TDU is designed to remediate organic hydrocarbon waste streams by thermally volatilizing their hydrocarbon constituents such that they are separated from the solid fraction, processed, and captured as a recovered organic material. The TDU consists of a solids feed system, an indirectly heated rotary drum, a Vapor Recovery Unit (VRU), and a Thermal Oxidizer Unit (TOU). Gases exit the TOU and flow through a water quench, a venturi scrubber, and a packed bed scrubber. An induced draft (ID) fan downstream of the packed bed scrubber pulls the gases through the TOU and quench/scrubber system and pushes them out the stack.

1.3 Regulatory Overview

The TDU is a thermal treatment unit, but it does not meet the definitions of an incinerator, boiler, or industrial furnace provided in 40 CFR § 260.10. The TDU does not use controlled flame combustion. Therefore, this unit is subject to 40 CFR Part 264 Subpart X and LAC 33:V.Chapter 32. 40 CFR § 264.601 and LAC 33:V.3203 require that Subpart X permit terms and provisions include those requirements of 40 CFR Part 264 Subparts I through O and Subparts AA through CC, 40 CFR Part 270, 40 CFR Part 63 Subpart EEE, and 40 CFR Part 146 that are appropriate for the miscellaneous unit being permitted. The Louisiana Department of Environmental Quality (LDEQ) has determined that some of the performance standards of 40 CFR Part 63 Subpart EEE, Hazardous Waste Combustor National Emission Standards for Hazardous Air Pollutants (HWC NESHAP), are appropriate for the TDU.

The applicable performance standards for the TDU are stated in Condition V.G.10.a of the permit. The applicable emission standards for the TDU are summarized in Table 1-1 and are described below:

- Dioxins and furans (D/F) emissions shall not exceed 0.20 nanograms toxic equivalence per dry standard cubic meter (ng TEQ/dscm) corrected to seven percent oxygen.
- Mercury emissions shall not exceed 8.1 micrograms per dry standard cubic meter (µg/dscm) corrected to seven percent oxygen.
- Cadmium and lead combined, referred to as semivolatile metals (SVM), emissions shall not exceed 10 µg/dscm corrected to seven percent oxygen.
- Arsenic, beryllium, and chromium combined, referred to as low volatile metals (LVM), emissions shall not exceed 23 µg/dscm corrected to seven percent oxygen.
- Hydrogen chloride and chlorine combined (HCl/Cl_2) emissions shall not exceed 21 parts per million by volume on a dry basis (ppmv dry), expressed as a chloride equivalent and corrected to seven percent oxygen.
- Particulate matter (PM) emissions shall not exceed 0.08 grains per dry standard cubic foot (gr/dscf) corrected to seven percent oxygen.
- Carbon monoxide (CO) emissions shall not exceed 100 ppmv dry corrected to seven percent oxygen.

technically, since CWM has elected to not comply with the PM standard, SVM should be (Cd+Pb+Se) and LVM should be (Sb+As+Be+Cr+Co+Mn+Ni). Ref 1219(e)(3) Alt PM Standard

In addition to the emission standards, Condition V.G.10.b.i.2 of the permit requires that CWM demonstrate compliance with the destruction and removal efficiency (DRE) standard of 40 CFR § 63.1219(c)(1), which requires a DRE of 99.99 percent or greater for each designated principal organic hazardous constituent (POHC).

TABLE 1-1
APPLICABLE EMISSION STANDARDS FOR THERMAL DESORBER UNIT

PARAMETER	UNITS [1]	EMISSION STANDARD
Dioxins and furans	ng TEQ/dscm	0.20
Mercury	µg/dscm	8.1
Semivolatile metals	µg/dscm	10
Low volatile metals	µg/dscm	23
Hydrogen chloride and chlorine	ppmv dry	21
Particulate matter	gr/dscf	0.08
Carbon monoxide	ppmv dry	100
Destruction and removal efficiency	%	99.99

[1] Emission standards corrected to seven percent oxygen.

1.4 COMPREHENSIVE PERFORMANCE TEST OVERVIEW

The CPT is designed to demonstrate compliance with the emission standards being included as applicable requirements in the permit. The CPT will also establish the operating parameter limits (OPLs) required by Condition V.G.11 of the permit. One test condition will be performed for the TDU during the CPT. The CPT condition will be performed to demonstrate compliance with the DRE standard and the D/F, mercury, SVM, LVM, HCl/Cl_2, PM, and CO emission standards while operating the TDU at the maximum total hazardous waste feed rate, the minimum TOU temperature, and the maximum flue gas flow rate. The venturi scrubber will be operated at the minimum pressure drop, and the packed bed scrubber will be operated at the minimum liquid to gas ratio, the minimum liquid flow rate, and the minimum liquid pH.

This CPT is being coordinated by Coterie Environmental LLC (Coterie) under the direction of CWM personnel. Coterie is responsible for the test protocol development and implementation and will oversee the TDU's operations and the stack sampling activities during the test program. A stack sampling contractor will perform all of the stack sampling for the test program. This contractor will be responsible for all emissions samples collected during the test program, with oversight by Coterie. A spiking contractor will provide waste spiking services during the test program. The emissions samples will be sent to qualified laboratories for analysis. Additional information on the project team roles and responsibilities is provided in the quality assurance project plan (QAPP) in Appendix A.

Prior to the CPT, CWM will perform the continuous monitoring systems (CMS) performance evaluation test (PET). The goal of the CMS PET is to demonstrate that the CMS associated with the TDU are operating in compliance with the permit. During the CMS PET, CWM will verify that each CMS is correctly installed, calibrated, and operational. A copy of the CMS PET plan is included as Appendix B.

CWM anticipates conducting the CPT soon after initial introduction of hazardous waste to the TDU. The CPT will be conducted within the first 720 hours of hazardous waste operations. An additional 720 hours of operation may be requested if circumstances prevent CWM from performing the CPT within the allotted time. The CPT is expected to take three days. The CPT report will be submitted within 90 days after completion of all emissions testing, or an extension will be requested.

1.5 Operating Parameter Limits Overview

CWM intends to establish the applicable OPLs required by Condition V.G.11 of the permit during the CPT. The target OPLs are summarized in Table 1-2 and are discussed in detail in Section 2. The OPLs will be established as hourly rolling averages (HRAs) or instantaneous values.

Table 1-2
Target Operating Parameter Limits Summary

Operating Parameter	Permit Condition	Averaging Period	Target Limit
Maximum hazardous waste feed rate	V.G.11.a.i	HRA	10 tph
Maximum treatment drum pressure	V.G.11.a.ii	Instantaneous [1]	0 in. w.c.
Minimum thermal oxidizer unit temperature	V.G.11.a.iii	HRA	1,400°F
Maximum flue gas flow rate	V.G.11.a.vi	HRA	4,000 acfm
Minimum venturi scrubber pressure drop	V.G.11.a.vii	HRA	35 in. w.c.
Minimum packed bed scrubber liquid to gas ratio	V.G.11.a.viii	HRA	10 gal/Macf
Minimum packed bed scrubber liquid flow rate	V.G.11.a.ix	HRA	40 gpm
Minimum packed bed scrubber liquid pH	V.G.11.a.x	HRA	5.0
Minimum rotary drum temperature	V.G.11.b.1	None [2]	500°F
Maximum mercury feed rate	V.G.11.b.2	None [2]	5.0 lb/hr
Maximum chlorine feed rate	V.G.11.b.3	None [2]	80 lb/hr
Maximum semivolatile metals feed rate	V.G.11.b.4	None [2]	200 lb/hr
Maximum low volatile metals feed rate	V.G.11.b.5	None [2]	300 lb/hr

[1] The automatic cutoff for this instantaneous limit will be established with a 15-second delay.
[2] These parameters do not require any averaging period and are not part of the automatic waste feed cutoff system.

ED_002099_0000079-00143

1.6 Reference Documents

Reference documents that have been used in developing this plan include the following:

- LDEQ, Final Modified Hazardous Waste Operating and Post-Closure Permit, Permittee: Chemical Waste Management, Inc., Lake Charles Facility, EPA ID Number: LAD000777201, Permit Number: LAD000777201-OP-RN-MO-1
- United States Environmental Protection Agency (USEPA), *Final Technical Support Document for HWC MACT Standards, Volume IV: Compliance With the HWC MACT Standards,* July 1999;
- USEPA, *Guidance on Setting Permit Conditions and Reporting Trial Burn Results*, January 1989;
- USEPA, *Methods Manual for Compliance With the BIF Regulations*, Appendix IX, 40 CFR Part 266;
- USEPA, National Emission Standards for Hazardous Air Pollutants from Hazardous Waste Combustors, 40 CFR Part 63, Subpart EEE, September 30, 1999, and as amended through October 28, 2008;
- USEPA, New Source Performance Standards, Test Methods and Procedures, Appendix A, 40 CFR Part 60; and
- USEPA, *Test Methods for Evaluating Solid Wastes Physical/Chemical Methods, Third Edition*, 1986 and updates (SW-846).

1.7 Comprehensive Performance Test Organization

The remaining sections of the plan provide the following information:

- Section 2 presents a discussion on the target OPLs for the TDU;
- Section 3 presents information on the TDU's feedstreams;
- Section 4 presents a detailed engineering description of the TDU;
- Section 5 presents a description of the continuous monitoring systems (CMS);
- Section 6 presents a description of the test operating conditions;
- Section 7 presents a summary of the test sampling and analysis procedures;
- Appendix A includes the QAPP; and
- Appendix B includes the CMS PET plan.

1.8 Document Revision History

The original version of this plan was submitted in November 2017. The nature and date of any future revisions will be summarized in Table 1-3.

TABLE 1-3
DOCUMENT REVISION HISTORY

REVISION	DATE	DESCRIPTION OF CHANGES
0	November 2017	Original submittal

ED_002099_0000079-00145

2.0 OPERATING PARAMETER LIMITS

Condition V.G.11 of the permit requires CWM to monitor a number of process parameters to demonstrate continued compliance with the emission standards. The allowable limits for most of the process parameters are determined from the results of the CPT. The CPT has been designed to demonstrate performance of the TDU at conditions representative of the extreme range of normal conditions. The OPLs that CWM plans to demonstrate are discussed below and are summarized in Table 2-1.

add condenser outlet temp. every 10-deg C approximately doubles mercury input rate to the TOU. Also doubles individual condensible hydrocarbon compounds ,but that is compound specific. Should also be AWFCO

TABLE 2-1
TARGET OPERATING PARAMETER LIMITS

OPERATING PARAMETER	UNITS	TARGET LIMIT
Maximum hazardous waste feed rate	tph	10
Maximum treatment drum pressure	in. w.c.	0
Minimum thermal oxidizer unit temperature	°F	1,400
Maximum flue gas flow rate	acfm	4,000
Minimum venturi scrubber pressure drop	in. w.c.	35
Minimum packed bed scrubber liquid to gas ratio	gal/Macf	10
Minimum packed bed scrubber liquid flow rate	gpm	40
Minimum packed bed scrubber liquid pH	- - -	5.0
Minimum rotary drum temperature	°F	500
Maximum mercury feed rate	lb/hr	5.0
Maximum chlorine feed rate	lb/hr	80
Maximum semivolatile metals feed rate	lb/hr	200
Maximum low volatile metals feed rate	lb/hr	300

2.1 MAXIMUM HAZARDOUS WASTE FEED RATE

A limit on maximum hazardous waste feed rate is required by Condition V.G.11.a.i of the permit. The maximum hazardous waste feed rate OPL will be determined using the average of the maximum HRAs from the CPT runs. The maximum total hazardous waste feed rate OPL will be established on an HRA basis.

CWM will establish the OPL for maximum hazardous waste feed rate during the CPT condition. The target value for maximum hazardous waste feed rate to the TDU is 10 tons per hour (tph).

2.2 MAXIMUM TREATMENT DRUM PRESSURE

Condition V.G.11.a.i of the permit requires that the pressure in the treatment drum of the TDU be maintained below 0 inches water column (in. w.c.) when hazardous waste is in the unit. The pressure

ED_002099_0000079-00146

must be monitored continuously. An automatic waste feed cutoff (AWFCO) must be initiated if the pressure exceeds 0 in. w.c. for more than fifteen seconds.

2.3 Minimum Thermal Oxidizer Unit Temperature

A limit on minimum TOU temperature is required by Condition V.G.11.a.iii of the permit. The minimum TOU temperature OPL will be determined using the average of the CPT run averages. The minimum TOU temperature OPL will be established on an HRA basis.

CWM will establish the OPL for minimum TOU temperature during the CPT condition. The target value for minimum TOU temperature is 1,400 degrees Fahrenheit (°F).

2.4 Maximum Flue Gas Flow Rate

A limit on maximum flue gas flow rate is required by Condition V.G.11.a.vi of the permit. The maximum flue gas flow rate OPL will be determined using the average of the maximum HRAs from the CPT runs. The maximum flue gas flow rate OPL will be established on an HRA basis.

CWM will establish the OPL for maximum flue gas flow rate during the CPT condition. The target value for maximum flue gas flow rate is 4,000 actual cubic feet per minute (acfm).

2.5 Minimum Venturi Scrubber Pressure Drop

A limit on minimum scrubber pressure drop is required by Condition V.G.11.a.vii of the permit. CWM will monitor this parameter at the venturi scrubber. The minimum venturi scrubber pressure drop OPL will be determined using the average of the CPT run averages. The minimum venturi scrubber pressure drop OPL will be established on an HRA basis.

CWM will establish the OPL for minimum venturi scrubber pressure drop during the CPT condition. The target value for minimum venturi scrubber pressure drop is 35 in. w.c.

2.6 Minimum Packed Bed Scrubber Liquid to Gas Ratio

A limit on minimum scrubber liquid to gas ratio is required by Condition V.G.11.a.viii of the permit. CWM will monitor this parameter at the packed bed scrubber. The minimum packed bed scrubber liquid to gas ratio OPL will be determined using the average of the CPT run averages. The minimum packed bed scrubber liquid to gas ratio OPL will be established on an HRA basis.

CWM will establish the OPL for minimum packed bed scrubber liquid to gas ratio during the CPT condition. The target value for minimum packed bed scrubber liquid to gas ratio is 10 gallons per thousand actual cubic feet (gal/Macf).

2.7 Minimum Packed Bed Scrubber Liquid Flow Rate

A limit on minimum scrubber liquid flow rate is required by Condition V.G.11.a.ix of the permit. CWM will monitor this parameter at the packed bed scrubber. The minimum packed bed scrubber liquid flow rate OPL will be determined using the average of the CPT run averages. The minimum packed bed scrubber liquid flow rate OPL will be established on an HRA basis.

CWM will establish the OPL for minimum packed bed scrubber liquid flow rate during the CPT condition. The target value for minimum packed bed scrubber liquid flow rate is 40 gallons per minute (gpm).

2.8 Minimum Packed Bed Scrubber Liquid pH

A limit on minimum scrubber liquid pH is required by Condition V.G.11.a.x of the permit. CWM will monitor this parameter at the packed bed scrubber. The minimum packed bed scrubber liquid pH OPL will be determined using the average of the CPT run averages. The minimum packed bed scrubber liquid pH OPL will be established on an HRA basis.

CWM will establish the OPL for minimum packed bed scrubber liquid pH during the CPT condition. The target value for minimum packed bed scrubber liquid pH is 5.0.

2.9 Minimum Rotary Drum Temperature

A limit on minimum rotary drum temperature is required by Condition V.G.11.b.i of the permit. The minimum rotary drum temperature OPL is established by the permit as 500°F. The minimum rotary drum temperature OPL will be established on an HRA basis.

2.10 Maximum Mercury Feed Rate

A limit on maximum mercury feed rate is required by Condition V.G.11.b.2 of the permit. The maximum mercury feed rate OPL will be determined using the average of the CPT run averages. The maximum mercury feed rate will not be monitored continuously and will not be part of the AWFCO system.

CWM will establish the OPL for maximum mercury feed rate during the CPT condition. The target value for maximum mercury feed rate is 5.0 pounds per hour (lb/hr).

no extrapolation

2.11 Maximum Chlorine Feed Rate

A limit on maximum chlorine feed rate is required by Condition V.G.11.b.3 of the permit. The maximum chlorine feed rate OPL will be determined using the average of the CPT run averages. The maximum chlorine feed rate will not be monitored continuously and will not be part of the AWFCO system.

CWM will establish the OPL for maximum chlorine feed rate during the CPT condition. The target value for maximum chlorine feed rate is 80 lb/hr.

2.12 Maximum Semivolatile Metals Feed Rate

A limit on maximum SVM feed rate is required by Condition V.G.11.b.4 of the permit. The maximum SVM feed rate OPL will be determined using the average of the CPT run averages. The maximum SVM feed rate will not be monitored continuously and will not be part of the AWFCO system.

no extrapolation limit, needs 3x or 80% of emission limit max

CWM will establish the OPL for maximum SVM feed rate during the CPT condition. The maximum SVM feed rate OPL will be determined by extrapolating from the average of the test run averages (See Section 6.3). The target value for the extrapolated maximum SVM feed rate is 200 lb/hr.

2.13 Maximum Low Volatile Metals Feed Rate

A limit on maximum LVM feed rate is required by Condition V.G.11.b.5 of the permit. The maximum LVM feed rate OPL will be determined using the average of the CPT run averages. The maximum LVM feed rate will not be monitored continuously and will not be part of the AWFCO system.

no extrapolation limit, needs 3x or 80% of emission limit max

CWM will establish the OPL for maximum LVM feed rate during the CPT condition. The maximum LVM feed rate OPL will be determined by extrapolating from the average of the test run averages (See Section 6.3). The target value for the extrapolated maximum LVM feed rate is 300 lb/hr.

3.0 FEEDSTREAM CHARACTERIZATION

CWM will remediate organic hydrocarbon waste streams in the TDU. The TDU and TOU will be fired on natural gas.

3.1 WASTE STREAMS

Target waste streams for processing in the TDU include waste spent catalyst, crude oil tank bottoms, tank bottoms sludge, centrifuge solids, and other hydrocarbon contaminated materials. These wastes streams may carry many different hazardous waste codes. Table 3-1 presents the typical characteristics of the target waste streams.

TABLE 3-1
TARGET WASTE STREAMS

PARAMETER	UNITS	TYPICAL
Organic content	% wt	0 – 10
Chlorine	mg/kg	0 – 4,000
Arsenic	mg/kg	0 – 5,000
Beryllium	mg/kg	0 – 5,000
Cadmium	mg/kg	0 – 5,000
Chromium	mg/kg	0 – 5,000
Lead	mg/kg	0 – 5,000
Mercury	mg/kg	0 – 260

3.2 NATURAL GAS

Natural gas will be fed to the TDU and TOU. The natural gas is not expected to contain any regulated constituents in greater than trace quantities.

3.3 WASTE CHOSEN FOR THE COMPREHENSIVE PERFORMANCE TEST

The waste streams for the CPT condition will be representative of the typical waste streams fed to the TDU. The actual waste streams will be chosen based on the current waste inventory at the time of the CPT. Spiking will be used to ensure that the CPT feed materials will provide worst case conditions for metals and chlorine loadings.

4.0 ENGINEERING DESCRIPTION

The TDU is designed to remediate organic hydrocarbon waste streams by thermally volatilizing their hydrocarbon constituents such that they are separated from the solid fraction, processed, and captured as a recovered oil. The TDU consists of a solids feed system, an indirectly heated rotary drum, a VRU, and a TOU. Gases exit the TOU and flow through a water quench, a venturi scrubber, and a packed bed scrubber. An ID fan downstream of the packed bed scrubber pulls the gases through the TOU and quench/scrubber system and pushes them out the stack.

Figure 4-1 provides a general process schematic diagram of the system.

FIGURE 4-1
PROCESS SCHEMATIC

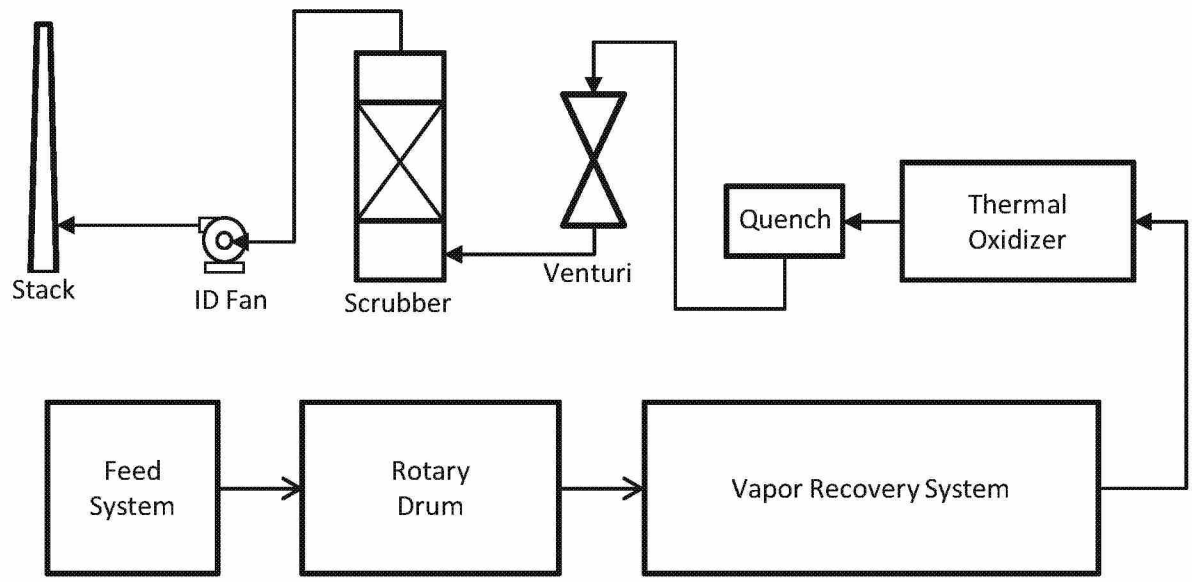

4.1 SOLIDS FEED SYSTEM

The feed material is received by truck and offloaded into four below grade storage pits (T-701, T-702, T-703, and T-704) where it is homogenized and loaded directly into to the TDU feed hopper (F-1101), by way of specialized equipment. The live bottom feed hopper is equipped with a twin screw feed hopper screw conveyor (CO-1101) driven by two synchronous variable frequency drives. This allows material to be discharged from the hopper at a controlled rate. The feed hopper is designed for a maximum throughput rate of 10 tph. Material discharging from the hopper enters directly into the inclined TDU feed conveyor (CO-1102) through the feed conveyor chute (CH-1101). The feed conveyor transfers the feedstock to the TDU feed screw (CO-1203) through the double gate TDU inlet valve (CO-1201) and slide

gate valve (CO-1202). The TDU inlet valve and TDU feed screw coupled with the rotary seal system are designed to minimizes and prevents air leakage into the TDU processing chamber.

4.2 Rotary Drum

The TDU feed screw conveyor (CO-1203) inserts the feedstock directly into the indirectly heated TDU rotary drum (D-1201). As the unit is indirect fired, the burner flame and products of fuel combustion do not contact the feed material or vapors generated inside the rotary drum. The 56-foot long drum has an inner diameter of seven feet.

The TDU furnace built around the rotary drum is heated by four burners (B-1701,2,3,4), which are designed to fire natural gas. Each burner system is furnished complete with a dedicated combustion blower (K-1702,3,4,5) and fuel train.

As the drum rotates, the hydrocarbon laden material exposed to the metal surface of the drum is continuously turned to facilitate the transfer of heat from the heated furnace through the kiln wall to the feed material. Drum chains installed inside the rotary drum serve to break up any larger clumps of materials and prevent material from accumulating on the drum wall.

The typical operating temperature range of the rotary drum is 800 to 1,100°F. This is achieved under anaerobic (low oxygen) conditions thereby preventing oxidation of the hydrocarbon compounds.

CPMS for oxygen?? compliance with NFPA? should be AWFCO

The material inlet and outlet openings of the rotary drum are regulated by double chamber pneumatically operated airlock valves (inlet valve CO-1201 and discharge valve CO-1205). The drum is furnished with a rotary graphite seal on the feed end and a flexible leaf seal arrangement constructed with tempered steel on the discharge end. The flexible leaf seals are used to prevent air intrusion while still accommodating growth of the drum from thermal expansion. These features are designed to minimize air leakage into the rotary drum and downstream plant components. The process blower (K-1301 A/B) and associated venturi control valve (FCV-1302) maintain a negative vacuum pressure inside the rotary drum.

4.3 Vapor Recovery System

Vapors from the rotary drum are routed to the VRU for collection by way of the vapor transport conveyor (CO-1301). Process gases (hydrocarbons and water vapor) exiting the TDU are recovered in two ways: as liquids/oils and light end hydrocarbon gases. Liquids, oils, and water are collected in the VRU through condensation. Hydrocarbon vapors that do not condense to liquids are scrubbed and are sent to the TOU for destruction.

In the VRU, cool process water is pumped to the pre-scrubber (E-1301) via the process water pump (P-1401 A/B), where it is injected through a series of water nozzles. This water mixes with the hot process gases from the rotary drum, cooling the gases to approximately 130°F. As the gas stream is

cooled, the organics condense. This is the primary point of vapor recovery in the system. The condensed organics mix with the process cooling water and drain by gravity into an integrated sump tank below called the interceptor (F-1301). The function of the interceptor is to serve as a primary collection and separation point of process water, organics, and sludge. The ventilation blower (K-1302) vents any vapors emanating from the interceptor to the TOU.

The partially cooled vapors that pass through the pre-scrubber (E-1301) are processed further by passing through a variable throat venturi valve (FCV-1302), where additional water is sprayed onto the gas stream to further cool and remove solid particles from the gas stream. The gases exiting the venturi unit pass through the separator (E-1302) and two demister modules (V-1301,2), where water and oil droplets are further removed from the gas stream. The vapor stream then enters the tube and shell heat exchanger (E-1303), where the gas temperature is reduced to approximately 60°F. This promotes additional vapor condensation including water and organics.

demonstrate. establish OPL and AWFCO

4.4 Process Blower

Upon exiting the tube and shell heat exchanger, the gas is drawn into the process blower (K-1301 A/B). The process blower provides the primary motive force for gases through the rotary drum and VRU.

4.5 Thermal Oxidizer Unit

The non-condensable gases from the VRU are routed to the TOU for final treatment prior to discharge to the atmosphere. Vapors enter the TOU through a fail closed automatic on/off valve (FCV-1603) and subsequent flame arrestor (FA-1602). The TOU has a nominal volume of 460 cubic feet.

The TOU is heated with the TOU burner (B-1601), a natural gas fired burner with the option to burn diesel. The burner is rated for up to four million British thermal units per hour (MMBtu/hr) thermal input. The TOU is equipped with its own independent burner management system (BMS).

The TOU combustion blower (K-1601) provides combustion air for the TOU burner. In addition, a TOU dilution blower (K-1602) has been provided to ensure that adequate oxygen is available for combustion of the non-condensable gases and that temperature in the TOU is controlled.

4.6 Quench

The combustion gases exit the TOU and enter the quench chamber. The quench chamber cools the gases to the adiabatic saturation point. The quench chamber is a vertical spray chamber with four spray nozzles. One nozzle provides fresh water and the other three provide recirculated water from the sump.