United States
Environmental Protection
Agency

Office of Research and
Development
Washington, DC 20460

EPA/600/R-01/057
July 2001
www.epa.gov/ncea

The Metal Finishing Facility Risk Screening Tool (MFFRST): Technical Documentation and User's Guide

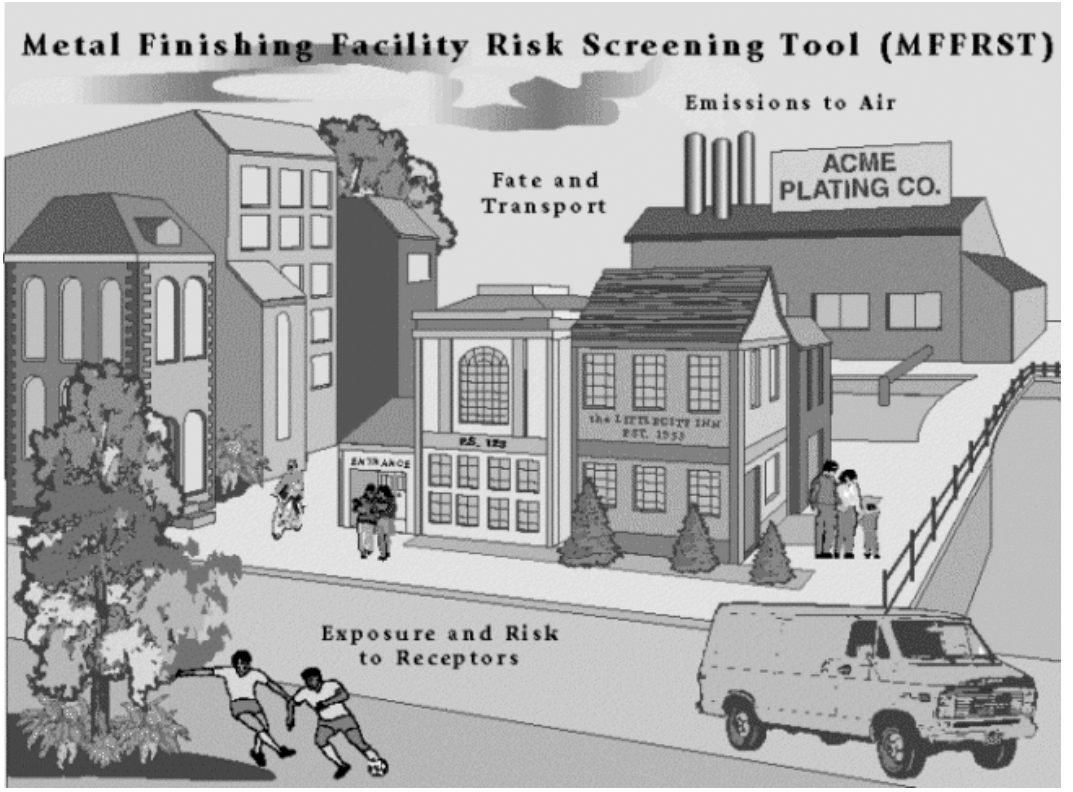

National Center for Environmental Assessment Washington Office
Office of Research and Development
U.S. Environmental Protection Agency
Washington, DC

EPA/600/R-01/057
July 2001
http://www.epa.gov/ncea/

THE METAL FINISHING FACILITY RISK SCREENING TOOL (MFFRST)

Technical Documentation and User's Guide

National Center for Environmental Assessment–Washington Office
Office of Research and Development
U.S. Environmental Protection Agency
Washington, DC

DISCLAIMER

This document has been reviewed in accordance with U.S. Environmental Protection Agency policy and approved for publication. Mention of trade names or commercial products does not constitute endorsement or recommendation for use.

TABLE OF CONTENTS

Page No.

1.0. INTRODUCTION 1-1
1.1. BACKGROUND ON CSI METAL FINISHING SUBCOMMITTEE AND RELATED PRODUCTS 1-1
1.1.1. Profile of Metal Finishing Industry 1-3
1.1.2. Risk Assessment Paradigm and Approach for MFFRST 1-4
1.2. SCOPE OF MFFRST 1-5
1.2.1. Screening Tool 1-5
1.2.2. Intended Users 1-6
1.2.3. Focus on Air and Inhalation Pathway of Exposure 1-6
1.2.4. Chemicals of Concern 1-7
1.3. MFFRST "MODULES" 1-8
1.3.1. Source Emissions Estimates 1-8
1.3.1.1. *Facility-Specific Scenario* 1-9
1.3.1.2. *Generic Process Scenario* 1-9
1.3.1.3. *User-Defined Scenario* 1-10
1.3.2. Fate and Transport Modeling 1-11
1.3.2.1. *Residential Exposure Scenario* 1-11
1.3.2.2. *Occupational Exposure Scenario* 1-12
1.3.3. Exposure Assessment and Human Health Impact Assessment 1-13
1.4. REFERENCES 1-16

2.0. IDENTIFICATION OF MAJOR CONTAMINANTS AND GENERATION OF SOURCE RELEASE ESTIMATES 2-1
2.1. INTRODUCTION 2-1
2.2. OVERVIEW OF THE INDUSTRY 2-1
2.2.1. Profile of Number, Type, and Size of Shops 2-1
2.2.2. Description of a Typical Electroplating Line 2-2
2.2.2.1. *Hexavalent Chromium (Cr^{+6}) Electroplating* 2-4
2.2.2.2. *Trivalent Chromium Electroplating* 2-13
2.2.2.3. *Nickel Electroplating* 2-14
2.2.2.4. *Electroless Nickel Plating* 2-14
2.2.2.5. *Copper Cyanide Electroplating* 2-14
2.2.2.6. *Acid Copper Electroplating* 2-15
2.2.2.7. *Cadmium Electroplating* 2-15
2.2.2.8. *Zinc Cyanide Electroplating* 2-16
2.2.2.9. *Zinc Chloride Electroplating* 2-16
2.2.2.10. *Zinc, Alkaline, Non-Cyanide Electroplating* 2-16
2.2.2.11. *Gold Electroplating* 2-16
2.2.2.12. *Phosphate Coating* 2-17

TABLE OF CONTENTS (Continued)

Page No.

2.3. CHARACTERIZATION OF EMISSIONS 2-18
2.3.1. The TRI Data Base and Procedures for Estimating Annual Emissions 2-19
2.3.2. Quantifying Emissions from Plating Process Lines 2-20
2.3.2.1. *Electroplating and Other Electrolytic Processes* 2-23
2.3.2.2. *Nonelectrolytic Processes (not including vapor degreasing)* 2-32
2.3.2.3. *Vapor Degreasing* 2-36
2.3.3. Controls for Fugitive Emissions Into the Indoor Workplace 2-37
2.3.4. Controls for Atmospheric Emissions 2-39
2.4. REFERENCES 2-41

3.0. MODELING THE FATE AND TRANSPORT OF CONTAMINANTS FROM SOURCE TO RECEPTOR 3-1
3.1. INTRODUCTION 3-1
3.2. RESIDENTIAL FATE AND TRANSPORT MODELING 3-1
3.2.1. Use of Air Dispersion Models 3-2
3.2.2. Requirements for Air Dispersion Predictions and Model Selection Criteria 3-5
3.2.3. Candidate Models 3-6
3.2.4. Input Parameters to SCREEN3 Dispersion Modeling 3-7
3.2.4.1. *Emission Source Data* 3-8
3.2.4.2. *Default Stack Parameter Values* 3-9
3.2.4.3. *Other Input Parameters* 3-14
3.2.5. Results from SCREEN3 in MFFRST and Converting to Maximum Annual Average Concentration 3-17
3.3. OCCUPATIONAL FATE AND TRANSPORT MODELING 3-17
3.3.1. Methodology/Assumptions 3-17
3.3.2. Use of Box Model for Concentration Estimation 3-19
3.3.3. Worker Exposure Times and Air Concentrations 3-21
3.3.4. Demonstration of the Box Model 3-21
3.4. REFERENCES 3-22

4.0. DEVELOPMENT OF EXPOSURE SCENARIOS AND RISK ESTIMATION 4-1
4.1. INTRODUCTION 4-1
4.2. EXPOSURE ASSESSMENT AND PATHWAYS 4-2
4.2.1. Receptors 4-2
4.2.2. Equations for Calculating Exposures 4-3
4.2.3. Exposure Factors 4-3

TABLE OF CONTENTS (Continued)

Page No.

4.2.3.1. *Residential - Adults and Children* 4-4
4.2.3.2. *Occupational - Process (Line) Workers and Other Workers* 4-4
4.3. TOXICITY (OR DOSE-RESPONSE) ASSESSMENT 4-5
4.3.1. Toxicity Data for Noncarcinogenic Effects 4-5
4.3.2. Toxicity Data for Cancer Effects 4-8
4.3.3. Benchmarks 4-9
4.4. RISK CHARACTERIZATION 4-10
4.4.1. Comparison to Benchmarks 4-10
4.4.2. Non Cancer Health Effects 4-11
4.4.3. Cancer Risks 4-12
4.5. REFERENCES 4-13

5.0. MODEL TESTING AND EVALUATION 5-1
5.1. VALIDATION EXERCISES 5-1
5.1.1. Comparison of MFFRST Predictions to TRI Reported Emissions 5-1
5.1.2. Comparison of Actual Stack Testing Emissions Data to MFFRST Predictions 5-5
5.1.2.1. *Model Input Data* 5-7
5.1.2.2. *Model Output Data* 5-8
5.1.2.3. *Data Correlation* 5-9
5.1.3. Comparison of MFFRST Predicted Air Concentration to Published Monitoring Data 5-11
5.2. DEMONSTRATION OF METHODOLOGIES AND RESULTS USING TRI AND THE GENERIC LINE OPTIONS 5-14
5.2.1. Estimating Potential Health Risks Using TRI Facility-specific Emissions Data 5-14
5.2.2. Estimating Potential Emissions and Health Risks Using MFFRST's Generic Process Line Feature 5-21
5.3. SENSITIVITY ANALYSIS 5-25
5.3.1. Impact of Electrolytic Tank Parameters 5-30
5.3.2. Impact of Non-Electrolytic Tank Parameters 5-30
5.3.3. Impact of Facility Stack, Meteorological, and Terrain Parameters . . . 5-32
5.3.4. Impact of Exposure Parameters 5-32
5.3.5. Impact of Workplace Box Model Parameters 5-35
5.3.6. Impact of Hazard Benchmarks 5-36
5.4. UNCERTAINTY 5-36
5.4.1. Uncertainties in Estimating Emissions 5-36
5.4.2. Uncertainties in Chemical Fate and Transport 5-37
5.4.3. Uncertainties in Toxicity Data 5-38

TABLE OF CONTENTS (Continued)

Page No.

5.4.4. Uncertainties in Exposure Assessment 5-39
5.4.5. Uncertainties in Risk Estimates 5-39
5.5. REFERENCES 5-41

6.0. MONITORING FOR KEY CONTAMINANTS 6-1
6.1. INTRODUCTION 6-1
6.2. AIR MONITORING CONCENTRATIONS 6-1
6.2.1. Workplace Occupational Monitoring Data for Chromium 6-2
6.2.2. Workplace Occupational Concentrations for Constituents other than Chromium 6-6
6.2.3. Ambient Air Monitoring Data for Chromium and Other Metal Finishing Constituents 6-9
6.3. MONITORING METHODOLOGIES 6-15
6.3.1. General Methodologies 6-16
6.3.2. General Considerations 6-17
6.3.3. Overview of Hexavalent Chromium Monitoring Methodologies 6-19
6.3.3.1. *Methods with Application to Occupational Air Monitoring* 6-19
6.3.3.2. *Methods with Application to Stack Sampling* 6-22
6.3.3.3. *Methods Applicable to Ambient Air Monitoring* 6-25
6.4. REFERENCES 6-27

APPENDIX A. USER'S GUIDE FOR MFFRST

LIST OF TABLES

Table 2-1. Relative Concentrations of Uncontrolled Atmospheric Emissions from Various Surface Coating Operations in the Electroplating Industry 2-25
Table 2-2. Concentration Levels of Atmospheric Emissions With Various Control Devices for Various Surface Coating Operation in the Electroplating Industry (mg/cu.meter) 2-28
Table 2-3. Ventilation Rates, Tank Surface Areas, and Volumetric Flow Rates for Various Surface Coating Operations in the Electroplating Industry 2-30
Table 2-4. Daily Mass Emission Levels External to the Plant with Various Control Devices for Various Surface Coating Operations in the Electroplating Industry (mg/day) 2-33
Table 3-1. Facility-Specific Stack Parameter Data for Metal Finishing Industry 3-10
Table 3-2. Information on Stack Parameter Values from AIRS/AFS Data 3-13
Table 3-3. Default Values for Select Input Parameters to SCREEN3 3-14
Table 4-1. Toxicity Data and Benchmark Concentrations for Select Metal Finishing Chemicals 4-6
Table 5-1. Comparison of TRI Data with MFFRST Predictions 5-3
Table 5-2. Chromium Plating Emissions Verification Data 5-6
Table 5-3. Summary of Predicted Hexavalent Chromium Worker Exposure Concentrations for the Decorative and Hard Chrome Plating Lines 5-12
Table 5-4. Stack Parameters for Four Metal-Finishing Plants Featured in TRI 5-15
Table 5-5. Residential Exposure Receptor-Related Default Inputs 5-16
Table 5-6. 1997 TRI Emission Profiles for Four Metal Finishing Plants 5-17
Table 5-7. Ambient Air Concentrations (mg/m^3) Predicted by MFFRST for Four Metal Finishing Plants 5-18
Table 5-8. Non-Cancer Health Risk for Residential Receptors Estimated by MFFRST for Reported TRI Emissions from Four Metal Finishing Plants 5-19
Table 5-9. Estimates of Cancer Health Risk for Residential Receptors Estimated by MFFRST for Reported TRI Emissions from Four Metal Finishing Plants 5-20
Table 5-10. MFFRST Estimated Chemical Emission Rates from a Generic Hard Chromium Plating Line 5-22
Table 5-11. MFFRST Estimated Non-Cancer and Cancer Risks from Hard Chromium Plating Process Line Exposure 5-22
Table 5-12. MFFRST Estimated Emission Rates from a Generic Decorative Chromium Plating Line 5-23
Table 5-13. MFFRST Estimated Non-Cancer and Cancer Risks from Decorative Chromium Plating Process Line Exposure 5-24
Table 5-14. MFFRST Estimated Emission Rates from a Generic Nickel Plating Line 5-24
Table 5-15. Typical Effects of Increasing MFFRST Parameter Values on Emission Rates, Ambient Air Concentrations, and Health Risks for Residents 5-26
Table 5-16. Typical Effects of Increasing MFFRST Parameter Values on Emission Rates, Indoor Air Concentrations, and Health Risks for Process Workers 5-28
Table 5-17. Typical Effects of Increasing MFFRST Parameter Values on Emission Rates, Ambient Air Concentrations, and Health Risks for Non-process Workers 5-29

Table 5-18. Effect of Tank Surface Area on Process Worker Exposure and Health Risk at a Hard Chromium Plating Facility 5-31
Table 5-19. Effect of Average Bubble Radius on Air Concentrations of Sulfuric Acid to Which Workers and Residents are Exposed at a Silver Plating Facility 5-33
Table 5-20. Effect of Surface Tension on Air Concentrations of Sulfuric Acid to Which Workers and Residents are Exposed at a Silver Plating Facility 5-33
Table 5-21. Effect of Changing Ambient Air Dispersion Model Parameter Values on Ambient Air Concentrations of Chromium from a Hard Chrome Plating Facility 5-34
Table 5-22. Effect of Time Spent Near the Tank on Average Indoor Air Concentrations for Process Workers at Hard Chromium Plant 5-35
Table 6-1. Summary of Workplace Air Concentrations of Chromium 6-3
Table 6-2. Overview of Concentrations of Constituents other than Chromium in Electroplating Shops 6-7
Table 6-3. Ambient Air Measurements from a Chrome Plating Facility in California 6-10
Table 6-4. Chromium Concentrations Associated with Chromate Ore Mining Sites in New Jersey and Background Settings in California 6-11
Table 6-5. Ambient Air Monitoring Data for Metal Plating Constituents in California During 1998 6-12
Table 6-6. Occupational Sampling Methods Relevant to Chromium Plating 6-20
Table 6-7. Stack Sampling Methods Relevant to Chromium Plating 6-23

LIST OF FIGURES

Figure 2-1. Hard Chromium Plating 2-5
Figure 2-2. Decorative Chromium Plating 2-5
Figure 2-3. Trivalent Chromium Plating 2-6
Figure 2-4. Nickel Plating 2-6
Figure 2-5. Electroless Nickel Plating 2-7
Figure 2-6. Copper Plating (Cyanide) 2-7
Figure 2-7. Copper Plating (Acid) 2-8
Figure 2-8. Cadmium Plating 2-8
Figure 2-9. Zinc Plating (Cyanide) 2-9
Figure 2-10. Zinc Plating (Chloride) 2-9
Figure 2-11. Gold Plating 2-10
Figure 2-12. Phosphate Coasting 2-10
Figure 2-13. Silver Plating 2-11
Figure 2-14. Anodizing - Sulfuric Acid 2-11
Figure 2-15. Anodizing - Chromic Acid 2-12
Figure 2-16. Chromate Conversion Coating 2-12
Figure 3-1. Major Components of Air Dispersion Models 3-3
Figure 3-2. Distribution of AIRS/AFS Stack Diameter Data (SIC 3471) 3-12
Figure 3-3. Concept for Occupational Exposure Concentration Estimation 3-20
Figure 5-1. Comparison of Actual and Predicted Emissions Data from Chromium Plating Operations 5-10

PREFACE

The Metal Finishing Facility Risk Screening Tool (MFFRST), a user-friendly tool that enables anyone to perform a screening characterization of health risks to workers and neighbors of metal finishing processes, was developed by the U.S. Environmental Protection Agency (EPA) under the Common Sense Initiative (CSI) Metal Finishing Sector. This tool focuses on the human health impacts from inhaling chemicals emitted from these types of operations. MFFRST enables the user to assess risks to both residents living near metal finishing facilities as well as workers in these plants. Results from MFFRST can be of considerable use to industry, government, environmental groups, workers, and residents living near metal finishing facilities. Specific analyses can be conducted for adults or children living at the fence line or a mile away from any facility in the Nation. Similarly, the tool can provide information on potential worker health risks that are tailored for the processes and work environments actually encountered. Such information can be used by plant managers to target pollution prevention efforts. Environmental groups and the public can use results from MFFRST to better understand the potential health risks from facilities in their area.

EPA's Common Sense Initiative (CSI) focused on developing and implementing new environmental management approaches. It was organized by industrial sector. The Metal Finishing Sector, one of six under CSI, has been productive in promoting "cleaner, cheaper, smarter" environmental performance. Participating in this effort are industry representatives (including three trade associations), environmental and community groups, organized labor, State and local governments, and other stakeholders. In Spring 1999, CSI transitioned into Sector-Based Environmental Protection within EPA.

The CSI Metal Finishing Subcommittee has supported many projects designed to address incentives and barriers and to test new ways to address environmental problems. Its current primary effort is the Strategic Goals Program (SGP) in which the industry, with support from the other stakeholders, agreed to achieve compliance and beyond-compliance goals by 2002. MFFRST embodies one of the commitments made by the EPA Office of Research and Development in support of SGP to develop and apply simple methods to characterize the emissions from plating operations and from them the risks to workers, surrounding communities, and the environment.

MFFRST was designed to be a user-friendly computerized screening methodology which allows anyone to easily evaluate the potential exposures and health risks to workers and nearby residents from emissions from individual metal finishing facilities. To meet this design objective, the development of this tool focused on: (a) a user-friendly interface which allows users to describe the metal finishing facility and exposure circumstances they wish to evaluate; (b) a complete set of default parameter values for source characterization, contaminant fate and transport, and exposure circumstances; and (c) incorporation of tested and accepted EPA screening models for quantitatively assessing the fate and transport of chemicals from the source of release to exposed individuals.

AUTHORS, CONTRIBUTORS, AND REVIEWERS

The National Center for Environmental Assessment (NCEA) within EPA's Office of Research and Development (ORD) was responsible for the preparation of this report. Major portions of this report were prepared by Versar, Inc. under EPA Contract Nos. 68-D5-0051 and 68-W-99-041. Matthew Lorber[1], of NCEA-Washington Office, served as the EPA Work Assignment Manager, providing overall direction and coordination of the project as well as serving as an author on several chapters.

AUTHORS

The individuals listed below were the principal authors of the report. Charles Peck[2] performed all programming of the MFFRST tool.

Chapter 1:	David Bottimore[2] and Greg Schweer[2]
Chapter 2:	Steven Schwartz[2]
Chapter 3:	David Bottimore[2] and De_Mei Meng[2]
Chapter 4:	David Bottimore[2] and Greg Schweer[2]
Chapter 5:	Matthew Lorber[1], Steven Schwartz[2], Diane Forrest[2]
Chapter 6:	David Bottimore[2], Diane Forrest[2], Matthew Lorber[1], and Nica Mostaghim[2]
Appendix A:	Charles Peck[2]

CONTRIBUTORS

Several individuals have provided helpful discussions or responded to requests for data and other material relevant to this report. The authors are grateful to Paul Shapiro, Harlal Choudhury, and Patricia Daunt of ORD/NCEA.

REVIEWERS

During development of this report, previous drafts were peer reviewed by scientists and experts within EPA and other federal agencies, as well as by experts in the private sector. The first draft was reviewed during the Summer of 1999 by the following reviewers:

Frank Altmayer	President, Scientific Control Laboratories, Inc. Chicago, Illinois
Joel Barnhart	Vice President - Technical, Elementis Chromium Corpus Christie, Texas

---

[1] U.S. EPA, National Center for Environmental Assessment, Washington Office.

[2] Versar, Inc., Springfield, Virginia.

Raymond Broussard	Texas Natural Resource Conservation Commission Austin, Texas
George Cushnie	Vice President, CAI Engineering Oakton, VA
Charles Darvin	U.S. EPA, National Risk Management Research Laboratory Research Triangle Park, North Carolina
Michael Dusetzina	U.S. EPA, Office of Air Quality Planning and Standards Research Triangle Park, North Carolina
Paul Harten	U.S. EPA, National Risk Management Research Laboratory Research Triangle Park, North Carolina
K. James Hay	U.S. Army, CERL Champaign, Illinois
John Lindstedt	Artistic Plating Milwaukee, Wisconsin
Ted Palma	U.S. EPA, Office of Air Quality Planning and Standards Research Triangle Park, North Carolina
Steven Richards	Director, Environmental Health and engineering U.S. Army Center for Health Promotion and Preventive Medicine Aberdeen Proving Ground, Maryland
Julie Rogers	Rogers Consulting Services Tucson, Arizona
Maureen Ruskin	Directorate of Technical Support U.S. Occupational Safety and Health Administration
Edward Stern	Directorate of Technical Support U.S. Occupational Safety and Health Administration

The second draft was reviewed during the Summer of 2000 by the following reviewers:

Frank Altmayer	President, Scientific Control Laboratories, Inc. Chicago, Illinois
Dennis Brown	Parsons Engineering Science, Inc. Oakland, California
Michael Dusetzina	U.S. EPA, Office of Air Quality Planning and Standards

Research Triangle Park, North Carolina

Paul Harten U.S. EPA, National Risk Management Research Laboratory
Research Triangle Park, North Carolina

1.0 INTRODUCTION

The Metal Finishing Facility Risk Screening Tool (MFFRST), a user-friendly tool that enables anyone to perform a screening characterization of health risks to workers and neighbors of metal finishing processes, was developed by the U.S. Environmental Protection Agency (EPA) under the Common Sense Initiative (CSI) Metal Finishing Sector. This tool focuses on the human health impacts from inhaling chemicals emitted from these types of operations. Included in this introductory chapter are descriptions of the tool, background information on CSI and related projects, an overview of the metal finishing industry, and a summary of the risk assessment paradigm that provides the framework for this tool. Also included are summaries of the scope of the tool's operation and the methodology used to develop the tool's three major modules that: (1) characterize emissions, (2) model the movement of chemicals from the source to human receptors, and (3) estimate exposures and assess potential human health impacts from exposures to chemicals of concern.

As mentioned above, MFFRST enables the user to assess risks to both residents living near metal finishing facilities as well as workers in these plants. Results from MFFRST can be of considerable use to industry, government, environmental groups, workers, and residents living near metal finishing facilities. Specific analyses can be conducted for adults or children living at the fence line or a mile away from any facility in the Nation. Similarly, the tool can provide information on potential worker health risks that are tailored for the processes and work environments actually encountered. Such information can be used by plant managers to target pollution prevention efforts. Environmental groups and the public can use results from MFFRST to better understand the potential health risks from facilities in their area. It is important to note that the results derived from MFFRST are generally conservative. If an exposure is found to result in an unacceptably high health risk with a screening model, then the appropriate first response is to refine the parameter input and/or evaluate the problem with different and perhaps more complex models (e.g., EPA's Industrial Source Complex (ISC) air dispersion model) and/or to collect representative air monitoring data.

1.1. BACKGROUND ON CSI METAL FINISHING SUBCOMMITTEE AND RELATED PRODUCTS

EPA's Common Sense Initiative (CSI) was one of EPA's premier reinvention efforts. It was intended to "make environmental and public health protection work smarter, more fairly, and more cost-effectively for all Americans" (Speech delivered by Carol M. Browner, Administrator, U.S. Environmental Protection Agency, at the Center for National Policy Newsmaker Luncheon, Washington, DC. July 20, 1994). CSI focused on developing and implementing new environmental

management approaches. It was organized by industrial sector. The Metal Finishing Sector, one of six under CSI, has been productive in promoting "cleaner, cheaper, smarter" environmental performance. Participating in this effort are industry representatives (including three trade associations), environmental and community groups, organized labor, State and local governments, and other stakeholders. In Spring 1999, CSI transitioned into Sector-Based Environmental Protection within EPA.

The CSI Metal Finishing Subcommittee has supported many projects designed to address incentives and barriers and to test new ways to address environmental problems. Its current primary effort is the Strategic Goals Program (SGP) in which the industry, with support from the other stakeholders, agreed to achieve compliance and beyond-compliance goals by 2002. MFFRST embodies one of the commitments made by the EPA Office of Research and Development in support of SGP.

The Subcommittee's Research and Technology Work Group developed a National Metal Finishing Environmental R&D Plan (U.S. EPA, 1997). The highest priority recommendation in the Plan, based on ratings by all the stakeholders, was to develop and apply simple methods to characterize the emissions from plating operations and from them the risks to workers, surrounding communities, and the environment.

To address this recommendation, an initiative was begun to develop approaches to characterize human health risks from metal finishing facilities. The following objectives were endorsed by the stakeholders.

> *To develop a screening methodology that will enable characterizations of risks to workers and neighbors from emissions of single or multiple chemicals from metal finishing operations. In the future field monitoring may be used to supplement and/or field test the methodology. To develop a simple computer tool that will enable anyone without assistance to perform a screening characterization of the risks to workers and neighbors at metal finishing facilities.*

The first product of this effort was a primer on risk assessment specific to this industry, Characterizing Risk at Metal Finishing Facilities (U.S. EPA, 1998), which described an approach to evaluate exposure and human health risks to contaminants in the environment, and how that approach can be applied to the metal finishing industry. The stakeholders accepted this paper as the basis for developing the fuller methodology and a simple computer-based tool.

MFFRST is building on these efforts to help meet the needs of the stakeholders. MFFRST was designed to be a user-friendly computerized screening methodology which allows anyone to

easily evaluate the potential exposures and health risks to workers and nearby residents from emissions from individual metal finishing facilities. To meet this design objective, the development of this tool focused on: (a) a user-friendly interface which allows users to describe the metal finishing facility and exposure circumstances they wish to evaluate; (b) a complete set of default parameter values for source characterization, contaminant fate and transport, and exposure circumstances; and (c) incorporation of tested and accepted EPA screening models for quantitatively assessing the fate and transport of chemicals from the source of release to exposed individuals.

Another product from CSI's Metal Finishing Sector research effort have been helpful in developing MFFRST; that is the Hard Chrome Pollution Prevention Demonstration Project, Interim Report, (U.S. EPA, 1996). This document is a study of total and hexavalent chromium emissions from hard chromium plating tanks in several electroplating shops. It attempts to relate operating parameters, such as current density, use and concentration of fume suppressants, use of polymer balls, and various combinations of air pollution control devices, to the concentration of total and hexavalent chromium (Cr^{+6}) emissions.

1.1.1. Profile of Metal Finishing Industry

The metal finishing industry is composed of thousands of shops of varying size that perform a wide range of metal finishing processes. The discussion below characterizes the number, size, and types of metal finishing shops. More extensive discussion of the metal finishing industry is presented in Chapter 2 of this report.

Metal finishing and surface coating process operations include surface cleaning, electroplating, electroless plating, anodizing, phosphate and chromium conversion coating, and painting. Facilities that perform some combination of these operations are commonly referred to as "electroplaters." Electroplating is conducted in two general types of facilities: job shops and captive shops. Job shops are mostly small businesses while captive operations tend to take place within larger manufacturing businesses. Job shops almost always conduct electroplating on parts from outside sources (i.e., parts the shop has not manufactured). They are primarily classified under the U.S. Department of Commerce's Standard Industrial Classification (SIC) Code 3471 (metal plating and polishing). Captive shops, owned or contracted by larger manufacturing facilities, are involved in the actual manufacturing of items such as machinery, automobiles, appliances, and musical instruments (U.S. EPA, 1995a). Such manufacturing facilities incorporating captive shops are generally classified under SIC Codes 34 to 39 (i.e., facilities fabricating metal products, machinery, electronic equipment, and similar products).

There are an estimated 3,000 job shops and 10,000 captive shops in the United States, depending on industry definition (U.S. EPA, 1998). The industry employs more than 500,000 people (U.S. EPA, 1998). A typical job shop is about 30 years old, employs about 10 to 20 people, and operates in a small, single-story (about 25 feet high) building in urban areas. Though found throughout the United States, operations are concentrated in industrial areas of the Northeast, Midwest, Texas, and California (U.S. EPA, 1995a).

1.1.2. Risk Assessment Paradigm and Approach for MFFRST

The underlying principles of exposure and risk assessment are covered in depth in the recent EPA report, Characterizing Risk at Metal Finishing Facilities (U.S. EPA, 1998). A brief overview is presented here to help explain the foundation on which MFFRST is built. Specifically, the modules of the tool mirror the components of the risk paradigm, so a basic understanding of the paradigm helps to understand the functions of the model.

Current approaches to environmental risk assessment are built on a paradigm developed by the National Research Council (NRC, 1983) and subsequently implemented by EPA through guidelines (e.g., Guidelines for Carcinogen Risk Assessment [U.S. EPA, 1986]) and programmatic guidance such as Risk Assessment Guidance for Superfund: Volume I, Human Health Evaluation Manual (RAGS) (U.S. EPA, 1989). The risk assessment paradigm is comprised of four components: (1) hazard identification - the determination of the human health hazard posed by exposure to a particular chemical, (2) dose-response assessment - the quantitative description of the human health response given a particular dose regime for a chemical, (3) exposure assessment - the description, including quantification, of the exposure of a human to a chemical, and (4) risk characterization - the compilation of information from the first three steps of the paradigm to make quantitative or qualitative statements regarding potential health risk.

Metal finishing facilities emit a variety of chemicals, including solvents from cleaning/ degreasing of parts and metals from electroplating operations. Such chemicals can cause a variety of health effects including cancer, developmental toxicity, neurotoxicity, and other short term effects (U.S. EPA, 1998). The degree to which these effects may occur primarily depends on exposure. The magnitude of exposure to these chemicals in the air depends on several factors including the chemical concentration to which an individual is exposed, the duration and frequency of the exposure, and related factors.

The major calculations performed by MFFRST focus on the exposure assessment: characterization of source emissions, modeling the fate of contaminants from source to receptor, and

prediction of concentrations of chemicals in air to which receptors (workers, neighbors) are exposed. The final step performed by MFFRST is to characterize the potential health impacts (cancer and non-cancer endpoints) of this exposure.

1.2. SCOPE OF MFFRST

MFFRST is a user-friendly computer tool that evaluates potential health risks to workers and neighbors of metal finishing facilities. It is intended to be applicable to any metal finishing facility in the United States. The system focuses on exposures and long-term human health impacts from inhaling chemicals emitted from metal finishing shops. Included are screening-level assessments of potential risks of cancer and non-cancer effects from chemicals used in typical metal finishing operations, such as solvents, chromium, and other metals.

MFFRST takes the user through a series of input screens, prompting the user for facility-specific information on:

- Source - Characterizes the emissions by describing the facility's operations.
- Fate/transport - Models air dispersion of chemical emissions from the source to the receptor (such as distance from the facility to the receptor's home).
- Receptor Exposures and Health Risks - Estimates exposures and assesses the health impacts to workers and nearby residents from emitted chemicals.

1.2.1. Screening Tool

MFFRST is characterized by EPA as a "screening model." This characterization has two important connotations for model usage. First, the model results are intended to be conservative in that predicted concentrations and exposures are likely to be higher, or at least higher than average, as compared to concentrations that might actually be occurring in a real world setting. If a predicted exposure is found to result in an unacceptably high health risk with a screening model, then the appropriate first response is to refine the parameter input and/or evaluate the problem with different and perhaps more complex models. Another response might be to consider monitoring to confirm results of the model. Such monitoring might include stack measurements or ambient air monitoring at locations around the facility and in areas where receptors live. These monitoring data can be used to evaluate the accuracy of air concentrations modeled by MFFRST.

It should be noted that screening models are rarely, if at all, used as the sole justification in regulatory decision making at the Environmental Protection Agency. More rigorous tools can be used to improve the estimates of exposures and risks for such decisions (See Chapter 3). The second key characteristic of screening models is that they are, by design, relatively simple and easy to parameterize for a variety of circumstances. In MFFRST, relatively simple models are used to characterize the source emissions and to predict the concentrations of contaminants to which individuals are exposed. Ease of use was one of the driving factors in the design of MFFRST.

1.2.2. Intended Users

MFFRST can be used by the public, environmental groups, government regulators, and industry staff to estimate risks from a particular metal finishing facility. The interface is intended to be user friendly and it steps the user through a series of screens. The user is prompted to enter data to characterize the particular source, fate and transport, and receptors of interest. Facility-specific information will help produce an estimate that best represents actual conditions of facility operation. If the user does not have these specific values, the system provides default values that are used to model emissions and the dispersion of pollutants to receptors.

A very knowledgeable user (e.g., the electroplating shop process engineer) may be able to provide most of the detailed process operation data requested by the model, so that the emission data will be relatively accurate. Other users (e.g., the local citizen living near the plant) may not know the detailed process data; their knowledge may be limited only to the plant's location relative to receptors. Nevertheless, the model will allow that user to generate estimates of "typical" emissions impacts, along with a caveat that such estimates are likely to have greater uncertainty unless at least some technical information is supplied (e.g., what metal(s) is electroplated at the shop). As with any site-specific model, MFFRST is most appropriately applied using site-specific data. The default data base provided in MFFRST can help users who may not have such data to generate a reasonable estimate of potential health risks.

1.2.3. Focus on Air and Inhalation Pathway of Exposure

Of the three media (i.e., air, water, and soil) that can be impacted by releases from metal finishing operations, air emissions are believed to account for much of the potential risks to human health. Other potential environmental issues related to metal finishing facilities include wastewater discharges and releases associated with hazardous waste storage, treatment and disposal. These forms of releases can potentially result in human exposures, but such exposures tend to be indirect and may not impact residents near the facilities to the same degree as air emissions.

Specifically, wastewaters are typically pretreated and sent to publicly owned treatment works (POTWs) for subsequent treatment and discharge. Similarly, hazardous wastes are usually drummed and sent offsite for treatment, recovery, and/or disposal. In these cases, exposures to the local environment and public are minimized. Furthermore, characterizing such indirect exposure is much more difficult. As a result, MFFRST currently focuses on estimating inhalation exposures of residents living near facilities as well as exposures of workers to air emissions generated by metal finishing operations.

1.2.4. Chemicals of Concern

MFFRST incorporates data that characterize the electroplating industry, the major electroplating manufacturing processes, and the chemicals typically used in electroplating processes. Included are chemicals that have significant use in the electroplating industry, such as those chemicals used in aqueous cleaning processes, solvent degreasing, and in plating and coating processes. A total of 17 line processes (see below and in Chapter 2 for more detail) and 25 chemicals are currently the focus of MFFRST.

The 25 chemicals of focus include: hexavalent chromium, trivalent chromium, sulfuric acid, gold, cyanide, copper, cadmium, zinc, nickel, sodium hypophosphite, hydrochloric acid, nitric acid, sodium hydroxide, sodium phosphate, sodium metasilicate, hydrofluoric acid, phosphoric acid, and six solvent degreasing agents: 1,1,1-trichloroethane (TCA), perchloroethylene, methanol, methyl ethyl ketone, trichloroethylene (TCE), and methylene chloride. Information on the use of these chemicals in metal finishing operations is carried through all calculations performed by the model.

Hexavalent chromium is the chemical of greatest interest because of its widespread use and toxicity. Current EPA regulations for electroplating shops limit atmospheric emissions of hexavalent chromium (Cr^{+6}) from chromium electroplating and anodizing tanks (U.S. EPA, 1995b). Hexavalent chromium cannot exceed 0.03 milligrams per cubic meter (mg/m^3) for small existing Cr^{+6} hard chromium plating shops ("small" means maximum potential rectifier capacity of less than 60-million amp-hrs/yr), and 0.015 mg/m^3 for all other hard chromium plating. For decorative Cr^{+6} plating and anodizing, the limit is 0.01 mg/m^3 or a surface tension in the bath of less than 45 dynes/centimeter. Occupational exposure limits and guidelines also have been established for chromium.

1.3. MFFRST "MODULES"

Three main modules in MFFRST conduct the calculations to estimate human health risks: (1) the source estimation module generates chemical-specific emission rate data from the plant, (2) the fate and transport module simulates the behavior of emitted chemicals in the environment and estimates resulting air concentrations, and (3) the exposure/risk module estimates exposures and assesses the human health impacts of these chemical exposures.

1.3.1. Source Emissions Estimates

The source estimation module produces emission rate data from metal plating shops. The user has three options to characterize metal finishing sources: (1) Facility-Specific Scenario - use of source emissions information from the Toxic Releases Inventory (TRI); (2) Generic Process Scenario - use of generic, metal finishing process lines; or (3) User Defined Scenario - develop a specific process line from default tanks. As introduced above, 17 metal finishing line operations and 25 chemicals can be included in the characterization. MFFRST also has another option to estimate human exposures and risks directly from concentrations of chemicals in ambient air. In this Concentration-Based Scenario, the user skips the source and fate/transport modules and estimates exposures and resulting risks directly from a user-supplied air concentration. The concentration input by the user could be one obtained from monitoring, one associated with a regulation (such as an OSHA Permissible Exposure Limit - PEL), one from an external modeling exercise, or one input for any purpose. The Concentration-Based scenario is applicable to both residential and occupational exposures.

Because most electroplating process tanks contain heated aqueous liquids (or organic vapors in the case of solvent cleaning), there are emissions of water vapor (or organic fumes from solvent cleaning) from every process tank. Metal air contaminants, which are all water-soluble metal salts, are emitted from plating tanks (and other electroplating shop operations) in the form of metals dissolved in an aerosol mist. These emissions can result in worker exposures and outdoor nearby resident exposures. All metal plating must consist of at least two steps: (1) removing oily deposits or paints from the surface of the substrate metal (using aqueous cleaner and/or solvents) and (2) the actual "electroplating" in which a film of metal is electrochemically applied to a substrate metal. Small amounts of chemicals are assumed in MFFRST to be emitted in both steps.

Historically, typical solvents used in surface cleaning have included 1,1,1-trichloroethane (TCA), trichloroethylene (TCE), methylene chloride, perchloroethylene (PCE), methyl ethyl ketone (MEK), and naphthas for degreasing and xylene, toluene, and mineral spirits for paint stripping. Use

of chlorinated solvents (e.g., TCA, TCE, PCE, and methylene chloride) in metal finishing, particularly TCA, has become less predominant with the movement toward aqueous- and naphtha-based cleaning processes. Nevertheless, the 1997 EPA Toxics Release Inventory (TRI) (U.S. EPA, 1999), which is a publicly available database that contains information on specific chemical releases from the manufacturing sector of the U.S. economy and federal facilities, suggests that a large portion of volatile organic chemical emissions from this industry are these chemicals. Specifically, of the 4.3 million pounds of reportable chemicals emitted to air in 1997 from electroplating facilities, about 39 percent were chlorinated solvents, including TCE (1,138,958 pounds), PCE (372,223 pounds), TCA (62,915pounds), and methylene chloride (123,074 pounds).

1.3.1.1. *Facility-Specific Scenario*

The facility-specific scenario uses publicly available air emissions data reported by metal finishing plants to the U.S. EPA as part of the 1997 TRI (U.S. EPA, 1999). To support this option in MFFRST, TRI air emissions data (both stack and fugitive emissions) were retrieved for 426 metal finishing facilities (SIC Code 3471) nationwide. TRI emissions data are used by MFFRST under this scenario to estimate residential exposures only. It is inappropriate to use TRI data for occupational exposures because they represent the emissions leaving the plant to the outdoor environment. Source emission rates to the occupational environment are generated independently in the generic process and user-defined scenarios.

The user may elect to use a user-supplied source of data rather than TRI data for the facility-specific option in MFFRST. This option is explained in detail in Section 2.3.1 of this report.

1.3.1.2. *Generic Process Scenario*

In the generic process scenario, the user can select those metal finishing process lines that are contained within the facility of interest. From the process lines selected, MFFRST will generate air emissions estimates based on process line configurations that are typical in the industry. In developing a set of default line processes for MFFRST, the most prevalent processes were considered, including those that use chemicals likely to exhibit some toxicity. The user can adjust default operating parameters to tailor the estimate. For example, the user may choose the concentrations of chemicals within the tanks, the electroplating current density, the tank surface area, and the tank ventilation rates.

The generic process scenario is applicable for the following electroplating shop process lines and associated subprocesses (e.g., vapor degreasing, alkaline cleaning, acid etching/desmuting):

- Hard chromium plating with hexavalent chromium;
- Decorative chromium plating with hexavalent chromium;
- Decorative chromium plating with trivalent chromium;
- Nickel plating;
- Electroless nickel plating;
- Gold plating;
- Copper plating from a cyanide bath;
- Copper plating from a sulfate bath;
- Cadmium plating;
- Zinc plating from a cyanide bath;
- Zinc plating from a chloride bath;
- Zinc plating from an alkaline non-cyanide bath; and
- Silver plating.

Also, the following additional process lines that do not leave a metallic surface coating are addressed:

- Anodizing with sulfuric acid;
- Anodizing with chromic acid;
- Phosphate coating; and
- Chromate conversion coating.

1.3.1.3. *User-Defined Scenario*

A variation on the generic process scenario is the user-defined scenario where the knowledgeable user of the model may "build" a plating line tank-by-tank to include personalized variations applicable to his/her shop. MFFRST provides a variety of metal finishing processes from which the user can choose, because hundreds of metals/metal alloys are electroplated in different manners. In addition, cleaning, acid etching, plating, and rinsing practices vary significantly from shop to shop and concentrations of chemicals in plating tanks vary over wide ranges. This scenario allows the user to include just the process tanks that are in his/her plant, and adjust operating parameters to match the actual values. As a result, this scenario should allow the user to most accurately characterize emissions from a facility.

It is also noted that the emissions estimated by the generic process and user-defined scenarios are used in the worker exposure algorithm in MFFRST. Described later in the introduction, and in

Chapter 3, this algorithm is the procedure used to estimate workplace air concentrations and two exposure regimes for plating line workers and workers in other parts of the facility.

1.3.2. Fate and Transport Modeling

Based on the emission rates generated by the source estimation module, MFFRST uses established methods to provide screening-level estimates of air concentrations to which residents and workers might be exposed. Specifically, MFFRST uses the SCREEN3 model for residential scenarios and a "box model" for occupational exposure estimation. For the residential scenario, the user can estimate the dispersion of chemical emissions from a facility to the surrounding residential receptors. For the occupational scenario, two approaches can be used to estimate the concentrations of chemicals in the workplace air. The air dispersion models used in both the residential and occupational exposure scenarios will accommodate a wide variety of situations and will incorporate the user's knowledge of the site-specific factors. As with the rest of MFFRST, the use of site-specific data will improve the confidence in the predicted air concentrations and resulting estimated human exposures and risks.

1.3.2.1. *Residential Exposure Scenario*

As introduced earlier, MFFRST focuses on air emissions and inhalation as the primary route of exposure. Air quality models have become the primary analytical tool in assessing the impact of point sources on air quality. The modeling methods used in MFFRST are considered to be applicable for assessing impacts of a source from the facility fence line out to a 50 km radius of the source to be modeled. MFFRST's fate and transport estimation module uses the air emission estimates produced by the model from either the facility-specific (use of TRI air emissions data), generic process or user-defined scenarios. Using these emission rates, the fate and transport modeling procedures in MFFRST predict the movement of the chemicals in the air and the resulting concentrations of chemicals in the air where nearby receptors are located.

In estimating air concentrations for the residential receptor, MFFRST's fate and transport module considers source types, chemicals, stack characteristics, local terrain, meteorology, and other factors that may influence the movement of chemicals in air. The user is prompted to provide several types of information that are needed to produce a site-specific estimate of air concentrations. In general, if the user does not input any site-specific values, the system provides default values for these parameters. MFFRST provides default input values for select facilities (where available); otherwise industry-wide default values are presented to the user to review for appropriateness. Default input parameters for the dispersion calculations performed by SCREEN3 were developed

for MFFRST from guidance provided by EPA in the use of SCREEN3 and from facility-specific data. These data were retrieved from the U.S. EPA's Aerometric Information Retrieval System/ AIRS Facility Subsystem (AIRS/AFS) for facilities with the SIC Code 3471. From 500 to 900 data points were available for various stack parameter values. Where applicable, facility/stack-specific data are available for use in modeling air dispersion. Otherwise, these data sets were used to derive default values that represent the industry as a whole.

The user is also prompted to input information on other parameters used by SCREEN3, including distance to receptor, receptor height (above local ground level), land use classification (urban or rural), terrain, and related parameters. Chapter 3 presents more details on the use of such data to characterize the facility and local environment so SCREEN3 can provide air concentrations estimates that reflect actual conditions at the facility and receptor of interest.

1.3.2.2. *Occupational Exposure Scenario*

The fate and transport modeling used in MFFRST to estimate the indoor air concentrations to which workers may be exposed is performed by a "box model." Two types of workers are of concern: the plating line worker and "other" workers in the plant. Plating line workers are assumed to be exposed to high concentrations of chemical emissions found directly above plating baths (for about 1 percent of the work day) as well as lower concentrations throughout the remainder of the plant (for the remaining 99 percent of the day). Concentration estimates above the plating baths are generated by the source module of MFFRST, as part of the procedure to estimate total emissions. Other workers involved in other processes, as well as office workers, are expected to only be exposed to the predicted lower concentrations within the plant.

MFFRST assumes that these lower concentrations are uniform throughout the rest of the facility, regardless of location or specific job responsibilities of the workers. The box model predicts this concentration. The approach assumes that 1 percent of the emissions from the plating line escape ventilation to air pollution control devices and stacks. (Note, however, that the residential scenario described in Section 1.3.2.1 does <u>not</u> subtract this 1% in calculating the residential exposure.) This mass remains within the plant to be mixed with fresh air, which is simulated by the box model. The resulting concentrations predicted depend on the chemical emission rates, the size of the plant, and ventilation rates. Workers other than the plating line workers are assumed to be exposed to these concentrations for their entire work day.

1.3.3. Exposure Assessment and Human Health Impact Assessment

The exposure and risk assessment approaches used in MFFRST to estimate human health impacts from metal finishing air emissions are based on standard procedures developed by EPA (U.S. EPA, 1998). As stated earlier, this tool focuses on air emissions and the inhalation pathway of exposure for residents and workers. The risk assessment paradigm guides the exposure assessment, collection of toxicity data, and characterization of cancer and non-cancer health effects. More detailed information on the exposure and risk assessment techniques used by MFFRST are presented in Chapter 4 of this document.

MFFRST allows the user to conduct a site-specific exposure assessment that characterizes chemical releases, identifies exposed receptors, predicts exposure point concentrations, and estimates chemical intakes. In this case, the exposure pathway is: emissions from the source (metal finishing operations), air dispersion from the source to the location of the receptor, and inhalation by the receptor at the point of exposure (at a residence or in the workplace). The magnitude of exposure depends on the concentrations of chemicals in the air, which are either predicted by the tool or input by the user in the concentration-based scenario, and the frequency and duration of exposures to the chemicals. These exposure factors determine the magnitude of the exposure and depend on activity patterns and physical characteristics, which are linked to the type of receptor. MFFRST estimates exposures for four types of receptors: an "adult resident", a "child resident," a "plating line worker" (i.e., process worker), and an "other worker " (i.e., non-process worker).

The adult and child resident are exposed to the same outdoor air concentrations predicted by the SCREEN3 model at the distance from the facility that is provided by the user. As described in Chapter 3, SCREEN3 predicts the air concentration in the residential scenario, based on emission rates, stack data, local terrain, meteorological data, and related information. The difference in the estimated exposures for adults and children is determined by the years of exposure (30 for adults and 5 years for children) and exposure factors (described below) related to the behavior patterns of children and adults.

The two occupational receptors addressed by MFFRST are the plating line worker and “other” workers. These two types of workers were defined to differentiate between workers who are expected to be exposed to high concentrations directly above the plating line and other workers who will inhale lower air concentrations in the rest of the plating shop. The MFFRST user can adjust several parameters related to the dispersion of air inside the plant (size of plant and ventilation rates), as well as the exposure frequencies for the workers, to tailor the occupational exposure assessment to the facility of interest.

For the exposure assessments for these receptors, MFFRST provides default exposure factors on the exposure frequency and duration, inhalation rates, and other factors. The user can adjust these values as needed for a receptor of interest. Adult and children residential receptors are exposed to the same air concentrations. The differences in their exposures are determined by the duration and frequency of exposure, as well as different inhalation rates and body weights. Most of the default exposure factors are the same for both types of workers; the main difference in exposures for these workers is the percentage of the work day the plating line worker spends directly above the plating baths exposed to higher concentrations of chemicals.

The toxicity of chemicals to which a person may be exposed is a key factor in determining the relationship between the exposure and the probability of the occurrence and severity of an adverse health effect. The toxicity assessment, including the dose-response assessment, considers: (1) the types of adverse health effects associated with chemical exposures; (2) the relationships between magnitudes of exposures and potential adverse effects; and (3) related uncertainties such as the weight of evidence of a particular chemical's toxicity to humans. MFFRST relies on existing EPA sources for chemical-specific toxicity data. Reference Concentrations (RfCs) are used in MFFRST for assessing noncarcinogenic health effects such as developmental toxicity, neurotoxicity, and other endpoints. Carcinogenic slope factors (SFs) and unit risks are used to represent the toxicity of carcinogenic chemicals. Unit risks, used in MFFRST, are upper bound estimates of the cancer risk per unit of concentration of a chemical in air over a person's lifetime. Of the chemicals addressed in MFFRST, hexavalent chromium is the carcinogen of greatest concern.

Also used in MFFRST are benchmark concentrations, which are generic levels that can be used in screening health effects in a variety of situations. The benchmarks used in MFFRST for residential scenarios are the Risk-Based Concentrations (RBCs) developed by EPA Region 3. For occupational scenarios, the more stringent of OSHA’s Permissible Exposure Limits (PELs) or the Threshold Limit Values (TLVs) established by the American Conference of Governmental Industrial Hygienists are used.

The final step in the risk assessment produced by MFFRST is the risk characterization. This step combines information from hazard identification, dose-response assessment, and exposure assessment steps. Quantitative assessments performed by MFFRST include a comparison to benchmark concentrations, a cancer risk assessment, and an assessment of non-cancer effects. Comparison of air concentrations (predicted by MFFRST or provided by the user in the concentration-based scenario) against select benchmarks is a rough approximation of the potential for adverse effects. If the exposure concentrations are at or above these numbers, there is a possibility that individuals may be at risk and a more detailed risk assessment should be performed.

The main presentation of the results of this characterization are cancer risks, non-cancer hazard quotients (HQs) and hazard indices (HIs). Carcinogenic risk , expressed in scientific notation (e.g., an individual lifetime risk of one in 1,000,000 is represented as 1×10^{-6} or 1E-06), is the probability of increased cancer incidence resulting from exposure to proven or suspected carcinogens. If the probability of increased cancer incidence is greater than 1×10^{-4}, then a more detailed risk assessment should be performed. A hazard quotient that equals or exceeds 1 indicates a situation of potential health concern for non-cancer effects and also indicates the need for a more detailed assessment.

1.4. REFERENCES

NRC (National Research Council). 1983. Risk Assessment in the Federal Government: Managing the Process. Washington, DC: National Academy Press.

U.S. EPA. 1986. Guidelines for Carcinogen Risk Assessment. Federal Register, September 24, 1986 (51 FR 33992).

U.S. EPA. 1989. Risk Assessment Guidance for Superfund, Volume I. Human Health Evaluation Manual (Part A). Interim Final, December 1989.

U.S. EPA. 1995a. Profile of the Fabricated Metal Products Industry. Office of Enforcement and Compliance Assurance. EPA 310-R-95-007.

U.S. EPA. 1995b. New Regulation Controlling Air Emissions from Chromium Electroplating and Anodizing Tanks. Office of Air Quality Planning and Standards. EPA-453/F-95-001.

U.S. EPA. 1996. Hard Chrome Pollution Prevention Demonstration Project: interim report. U.S. EPA Common Sense Initiative (CSI), Metal Finishing Subcommittee.

U.S. EPA. 1997. National Metal-finishing Environmental R&D Plan. Common Sense Initiative Metal-finishing Subcommittee. EPA/600/R-97/095.

U.S. EPA. 1998. Characterizing Risk at Metal Finishing Facilities: Meeting the Needs of All Stakeholders. Office of Research and Development. EPA/600/R-97/111.

U.S. EPA. 1999. 1997 Toxics Release Inventory. Office of Pollution Prevention and Toxics. EPA 745-R-99-003.

2.0 IDENTIFICATION OF MAJOR CONTAMINANTS AND GENERATION OF SOURCE RELEASE ESTIMATES

2.1. INTRODUCTION

The purpose of this chapter is twofold: (1) to provide an overview of the metal finishing industry, and (2) to present procedures to estimate the emissions of process chemicals into the workplace as fugitive emissions and out of the stack after pollution controls. This methodology does not evaluate the impacts of emissions that result from accidents or other transient events. Emissions both indoor and outdoor are expressed in terms of mass per unit time, such as pounds/hr. Chapter 3 describes how these loadings are translated into indoor air concentrations and outdoor ambient concentrations by the use of fate and transport models. Chapter 4 describes the procedures used by MFFRST to generate information on potential human health impacts that could result from inhalation exposure to these predicted air concentrations.

2.2. OVERVIEW OF THE INDUSTRY

2.2.1. Profile of Number, Type, and Size of Shops

The metal fabrication industry conducts a wide range of processes that are performed on manufactured parts. Surface coating is one step that may be performed on manufactured parts. Prior to surface coating process operations, metal fabricators usually shape and machine the parts. Surface coating processes generally alter the articles' surface, giving it properties not present in the unfinished state. These properties include corrosion and scratch resistance, and often a decorative finish. Common surface coating process operations performed by electroplaters include electroplating, electroless plating, anodizing, and phosphate and chromium conversion coating.

Electroplating is conducted in two general types of facilities: job shops and captive shops. Job shops are classified as mostly small businesses, often with limited capital and small staffs. Captive operations tend to be larger business entities with larger employee pools. Job shops almost always conduct electroplating on parts from outside sources (i.e., parts the shop has not manufactured). Job shops are primarily classified under the U.S. Department of Commerce's Standard Industrial Classification (SIC) Code 3471 (metal plating and polishing). Captive shops, owned or contracted by larger manufacturing facilities, are involved in the actual manufacturing of items such as machinery, automobiles, appliances, and musical instruments. Many manufacturing facilities incorporating captive shops are classified under SIC Codes 34 to 39 (i.e., facilities fabricating metal products). In addition to job shop and captive electroplaters, approximately 700

other firms manufacture printed circuit boards (which require electroplating processes). The entire metal finishing industry generates in excess of $48 billion in revenues, contributing over $40 billion to the gross domestic product of the United States (U.S. EPA, 1998).

There are an estimated 3,000 job shops and 10,000 captive shops in the United States, depending on industry definition (U.S. EPA, 1998). The industry employs more than 500,000 people in more than 10,000 companies. A typical job shop is about 30 years old and employs about 10 to 20 people. A typical job shop is likely to be a single-story (about 25 feet high) building, ranging in size from 10 to 100,000 square feet (ft^2), and located in an urban environment. Its net annual sales are about $1.1 million. Though found throughout the United States, operations are most common in the industrial areas of the Northeast, Midwest, Texas, and California.

2.2.2. Description of a Typical Electroplating Line

Information in this section is derived primarily from publications by the American Electroplaters' Society (1969a, 1969b, 1970a, 1970b, 1972a, 1972b, 1973a, 1973b, 1974, 1975a, 1975b) (now known as the American Electroplaters and Surface Finishers Society, Inc.), and from the Electroplating Engineering Handbook (1984) and the Metal Finishing 99 Guidebook and Directory (1999).

All metal plating **must** consist of at least two steps: (1) removing oily deposits from the surface of the substrate metal and (2) the actual "electroplating" in which a film of metal is electrochemically applied to a substrate metal (or properly pretreated plastic). Also, some metal plating, such as nickel and copper, can be accomplished electrolessly. If oily deposits are not removed from the metal surface before plating, poor plated-metal adhesion will result in the electroplating step. Electroplating usually involves additional steps, especially in decorative chromium electroplating. Electroplating and associated process steps are discussed below. Also, Figures 2-1 to 2-16 show typical plating lines, as well as typical chemical concentrations in the baths, typical atmospheric exhaust volumes, and other typical operating information.

After each step in the plating process (such as the two above), one or more tap, distilled, or deionized water rinses must take place prior to the next operation. Rinsing, therefore, can be considered an additional required step. If thorough rinsing is not done between steps, chemicals from each step will be "dragged out" from one step to the next, possibly poisoning/contaminating the chemicals in the subsequent step, which would require premature replacement of those chemicals. Each step in the plating process is carried out in an appropriately sized tank. The surface area of a typical tank is 20 to 80 square feet (ft^2), and the tanks are as deep as necessary to allow

insertion of the racked parts. For rinsing, there are typically one to three rinse tanks after each process step. Rinsing is a source of wastewater discharge.

Removing oily deposits (i.e., Step 1) is usually carried out in a tank containing strong (over 100 grams/liter [g/L] cleaner concentration), hot (greater than 150°F) alkaline cleaners (e.g., surfactants, phosphates, sodium hydroxide [caustic soda]) and/or in a solvent degreaser, in which various hot or cold organic solvents and/or vapors from those solvents are used to dissolve and flush oils from the surface of the substrate metal. Historically, typical solvents used in solvent degreasers have included 1,1,1-trichloroethane (TCA), trichloroethylene (TCE), methylene chloride, perchloroethylene (PCE), naphthas, and methyl ethyl ketone (MEK). Use of TCA is becoming rare due to the phaseout of its production as mandated by the Clean Air Act (CAA), as it relates to ozone depleting substances. (See 40 CFR 82.) Most oil/grease removal on electroplating lines is done with alkaline cleaners, and not solvent degreasers.

After the deoiling/degreasing step, it is typical to use an acid cleaning/etching step prior to electrolytic and electroless plating. The acid cleaning/etching step removes metal oxides from the surface of the substrate metal and provides a more active and rougher surface to which the plated metal(s) can better adhere. Acids used for etching depend, in part, on the type of substrate metals. For steel, sulfuric and hydrochloric acids are common, typically at concentrations of up to 25 percent (250 g/L). For some applications and for other substrate metals, however, nitric, hydrofluoric, phosphoric, chromic, acetic, and oxalic acids, or combinations of such acids are used. Acid etching is typically accomplished at room temperature. As with the other plating process steps (except solvent degreasing), water rinse(s) is usually required after acid cleaning/etching.

Other steps are also required to manufacture a plated metal part, many of which are not wet processes. The dry processes that take place prior to the electroplating processes are typically combinations of metal forming (shaping the substrate metal by a number of mechanical processes), cutting, machining (primarily for metal castings rather than sheet metal), punching (making holes), welding, grinding, and buffing. Some of these processes are also used after electroplating. Some electroplated products will receive a protective clear coating of lacquer or other solvent-based coating after electroplating. Clear coatings are common for decorative plated metals that tarnish (e.g., copper, and brass).

This section is not intended to be an exhaustive description of electroplating technologies. Hundreds of metals/metal alloys are electroplated. Cleaning, acid etching, plating, and rinsing practices vary significantly from shop to shop based upon: proprietary practices, the use of proprietary chemicals, the substrate being plated, and the final use of the plated product. In

particular, the concentrations of chemicals presented in Figures 2-1 to 2-16 and discussed in the following subsections as plating tank constituents vary over wide ranges, as do bath temperatures. The intention is to present the general steps in the most prevalent electroplating industry processes, including the major bath constituents (particularly those that are likely to exhibit some toxicity) and operating parameters. The operating parameters that affect atmospheric emissions are also discussed in Section 2.3. The following electroplating process lines are discussed in the remainder of this Section:

- Hexavalent Chromium (Cr^{+6}) - both "hard" and decorative;
- Trivalent Chromium (Cr^{+3});
- Nickel;
- Electroless Nickel;
- Anodizing - both sulfuric and chromic acid;
- Copper Cyanide;
- Acid Copper;
- Cadmium;
- Zinc Cyanide;
- Zinc Chloride;
- Zinc, alkaline, non-cyanide;
- Gold;
- Silver;
- Chromium Conversion; and
- Phosphate Coating.

The individual components that are assumed to be part of these line processes are depicted in Figures 2-1 through 2-16. The following sections describe the industrial processes and the rationale behind the assumed default line processes.

2.2.2.1. *Hexavalent Chromium (Cr^{+6}) Electroplating*

Figures 2-1 and 2-2 present typical process steps for hard chromium plating and decorative chromium plating, respectively. Each of these steps are incorporated into MFFRST and are briefly described below.

For chromium plating, particularly decorative Cr^{+6} plating, it is not unusual to electroplate one or more metals such as copper and/or nickel prior to plating chromium. It is beyond the scope of this discussion to explain the reasons for plating other metals prior to plating chromium, but clearly for many end-uses of a chromium plated product, it is advantageous to plate chromium over one or more other plated metals. Again, as with the other process steps, a water rinse(s) is required after each metal is plated.

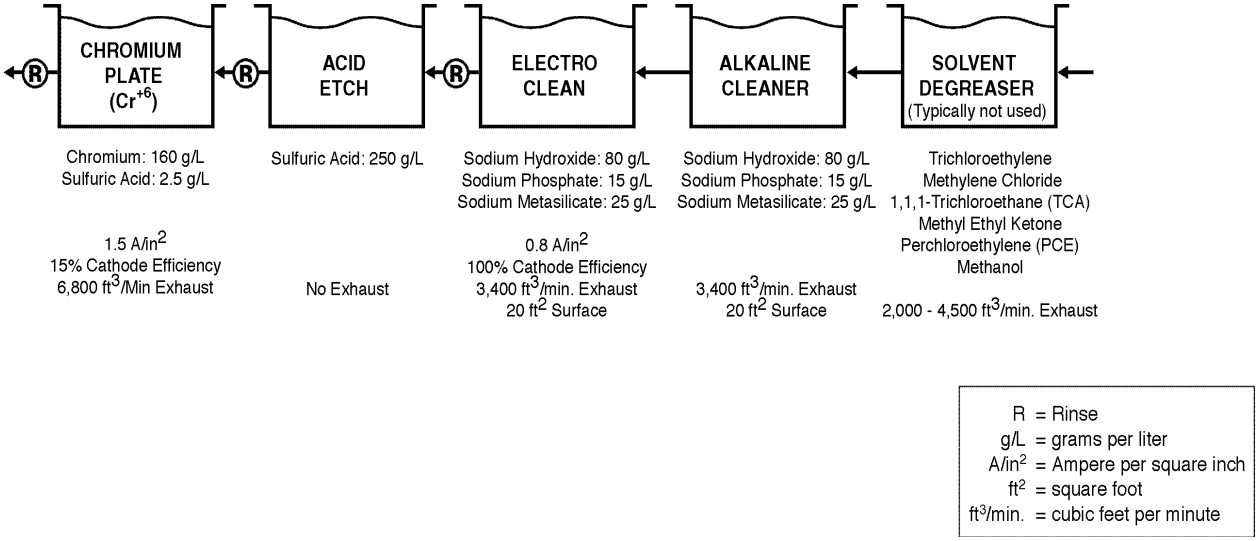

Figure 2-1. Hard Chromium Plating

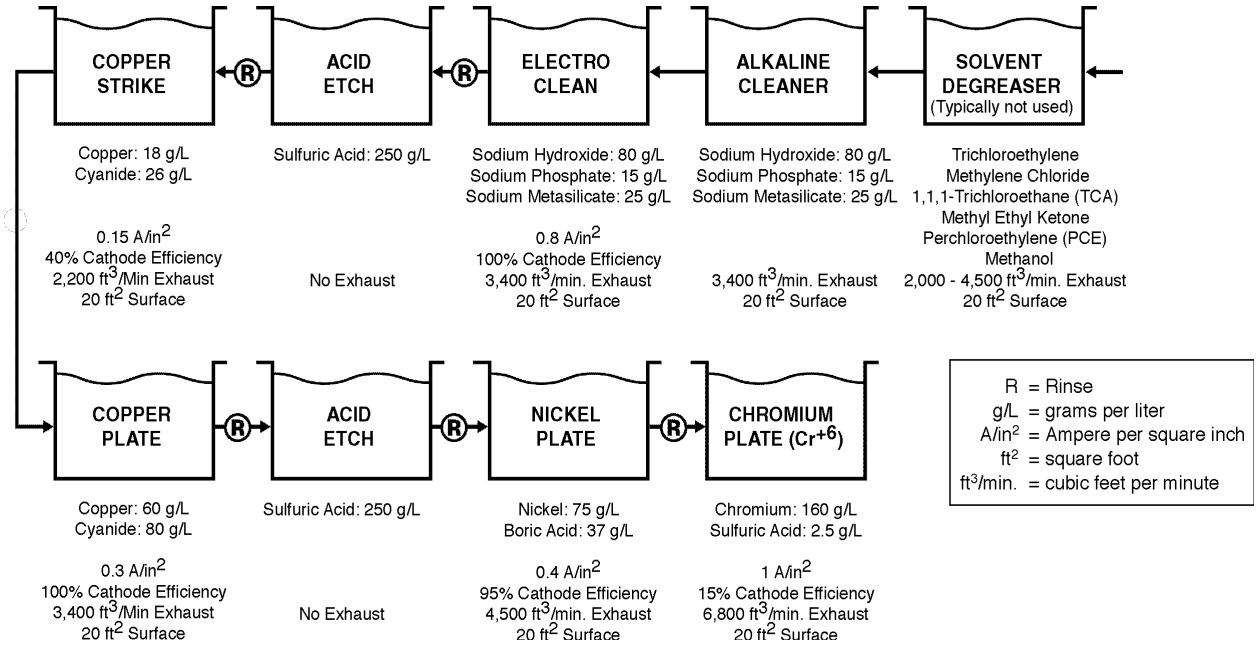

Figure 2-2. Decorative Chromium Plating

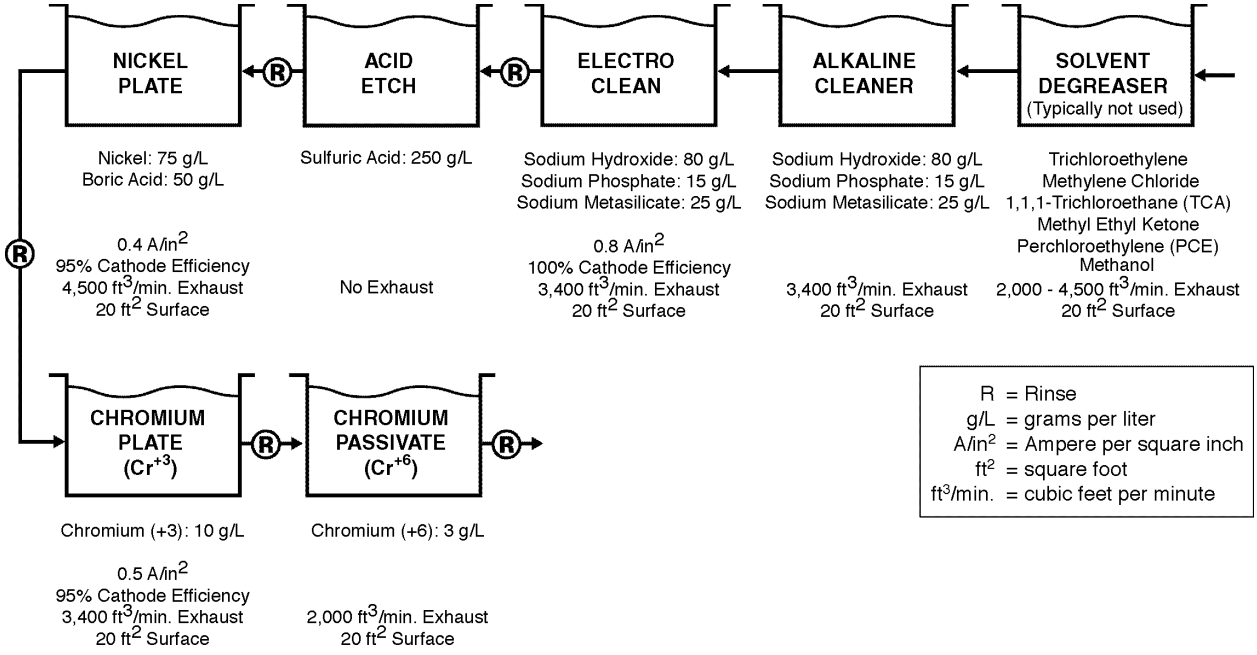

Figure 2-3. Trivalent Chromium Plating

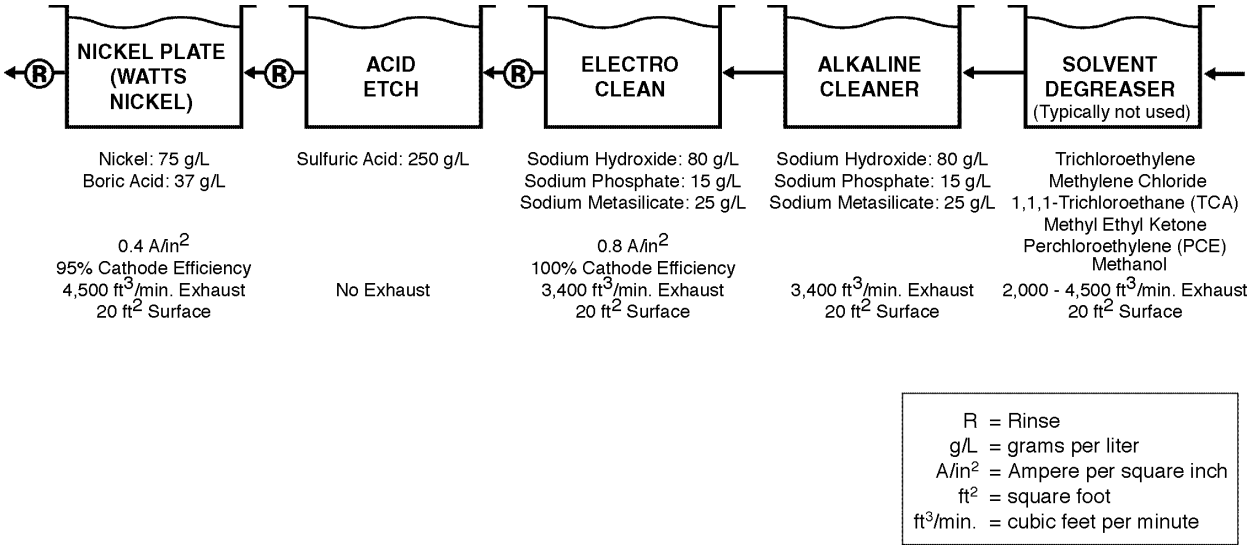

Figure 2-4. Nickel Plating

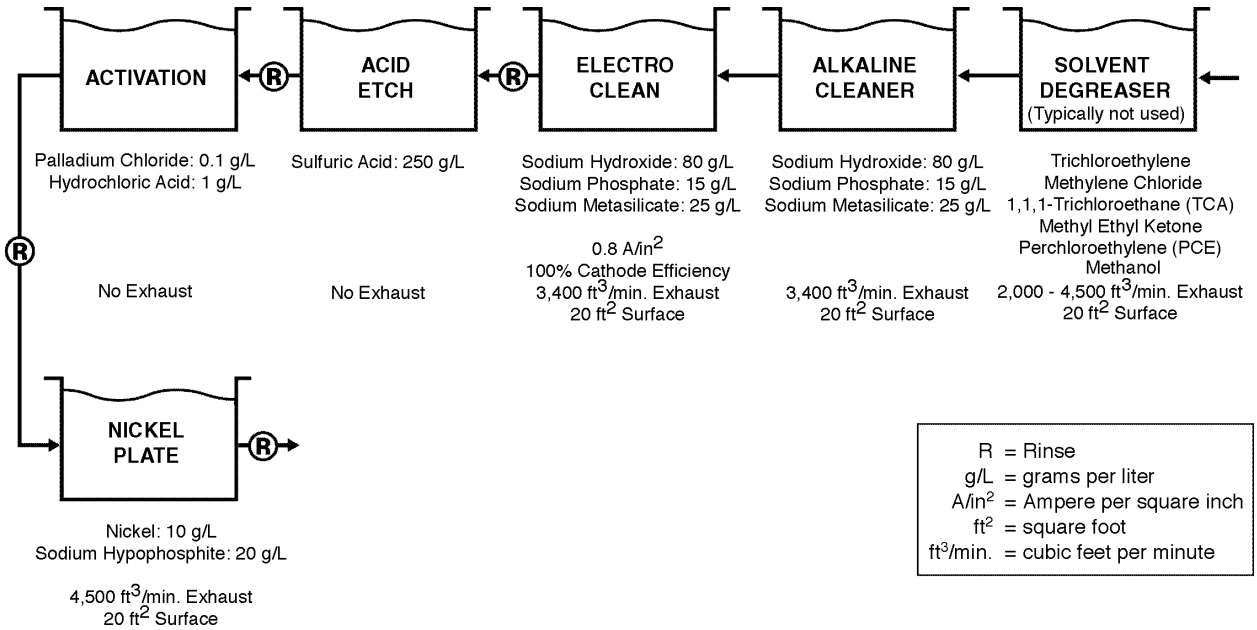

Figure 2-5. Electroless Nickel Plating

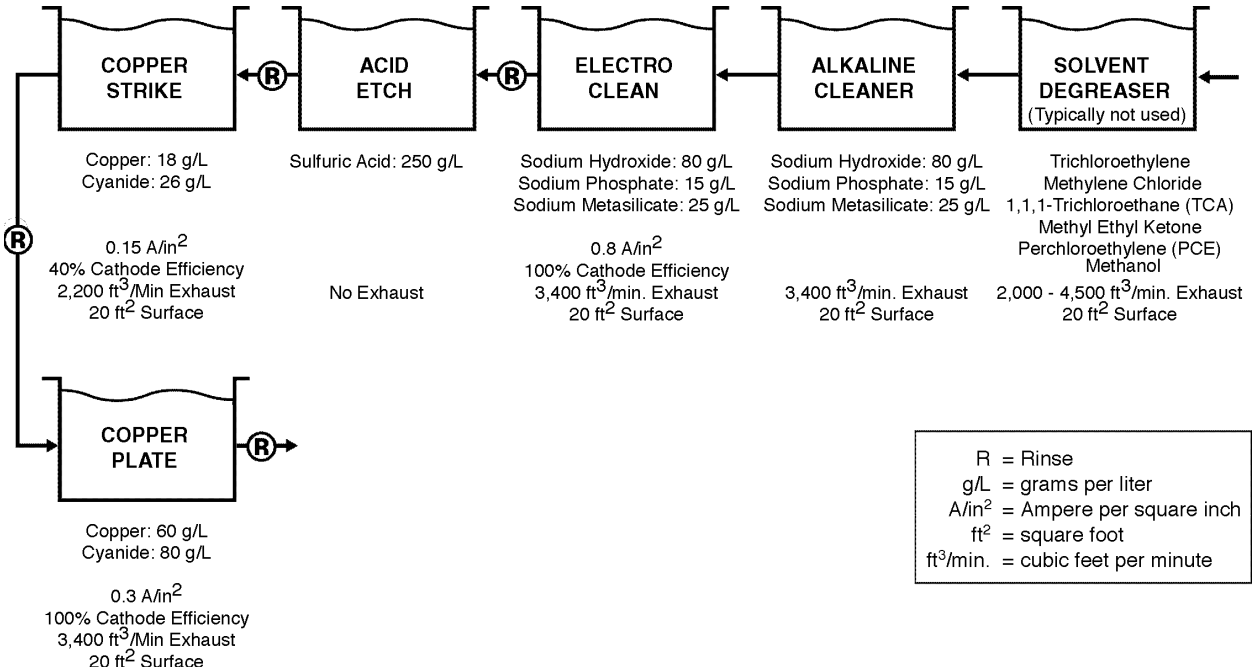

Figure 2-6. Copper Plating (Cyanide)

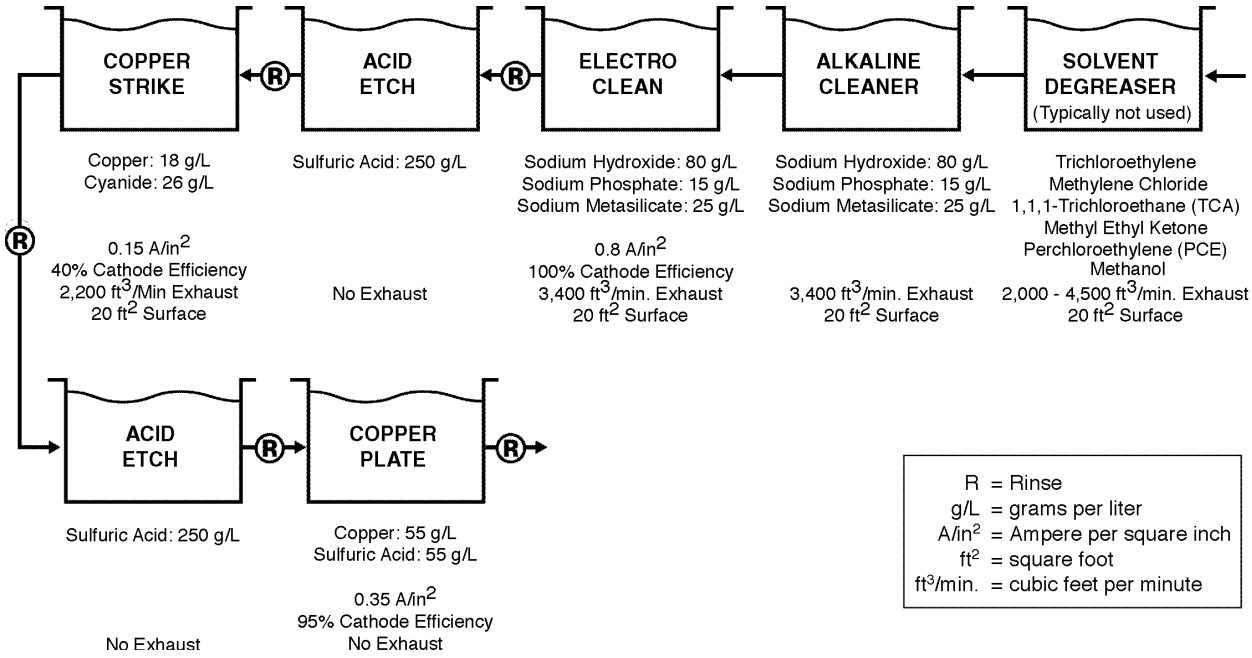

Figure 2-7. Copper Plating (Acid)

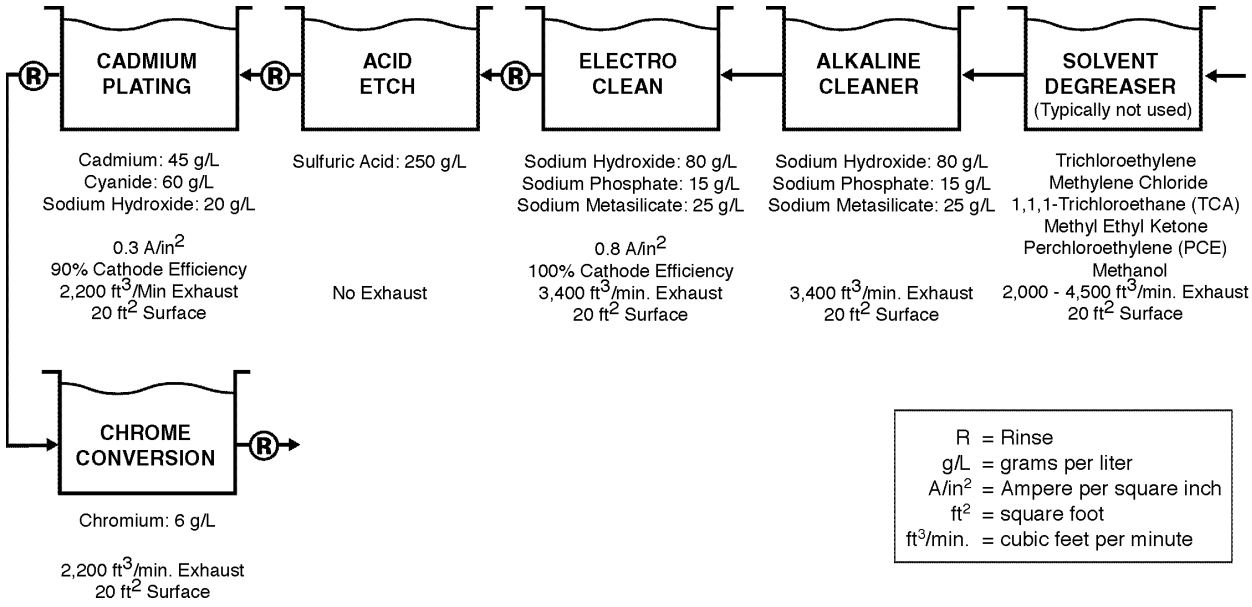

Figure 2-8. Cadmium Plating

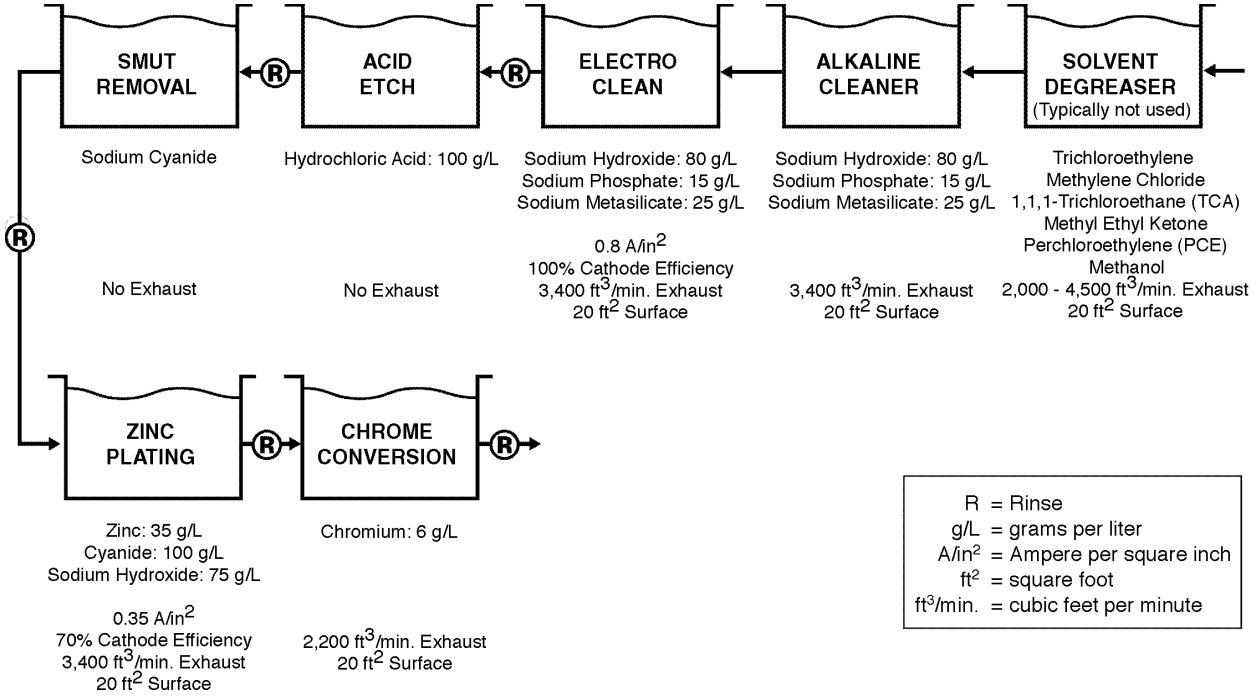

Figure 2-9. Zinc Plating (Cyanide)

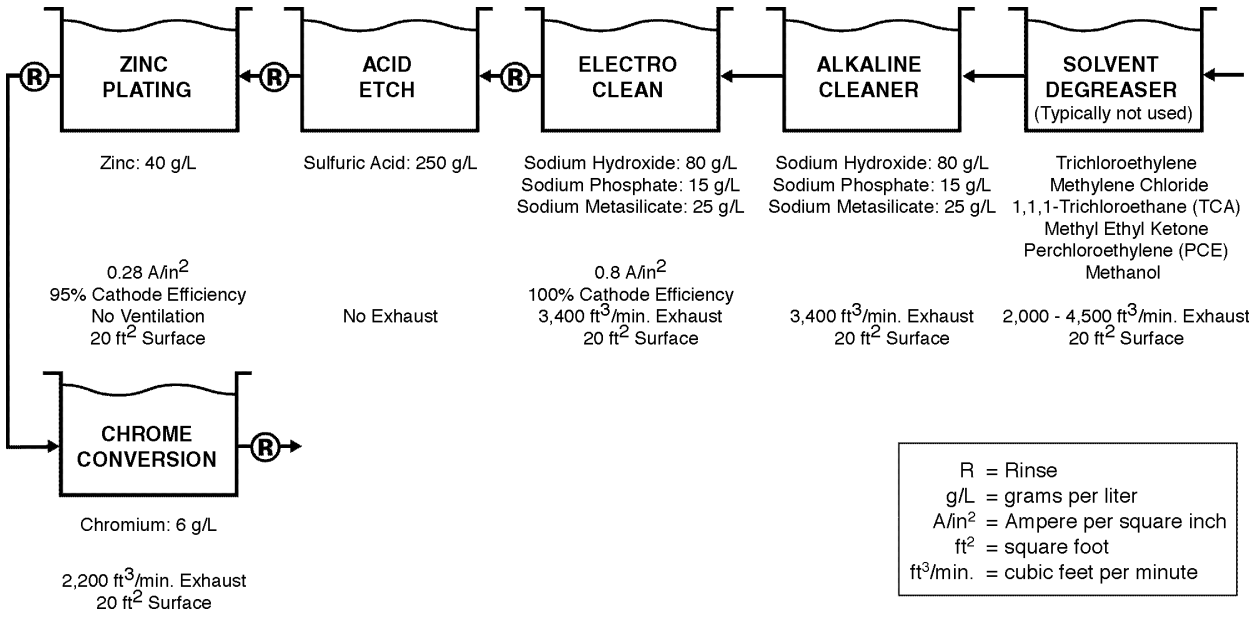

Figure 2-10. Zinc Plating (Chloride)

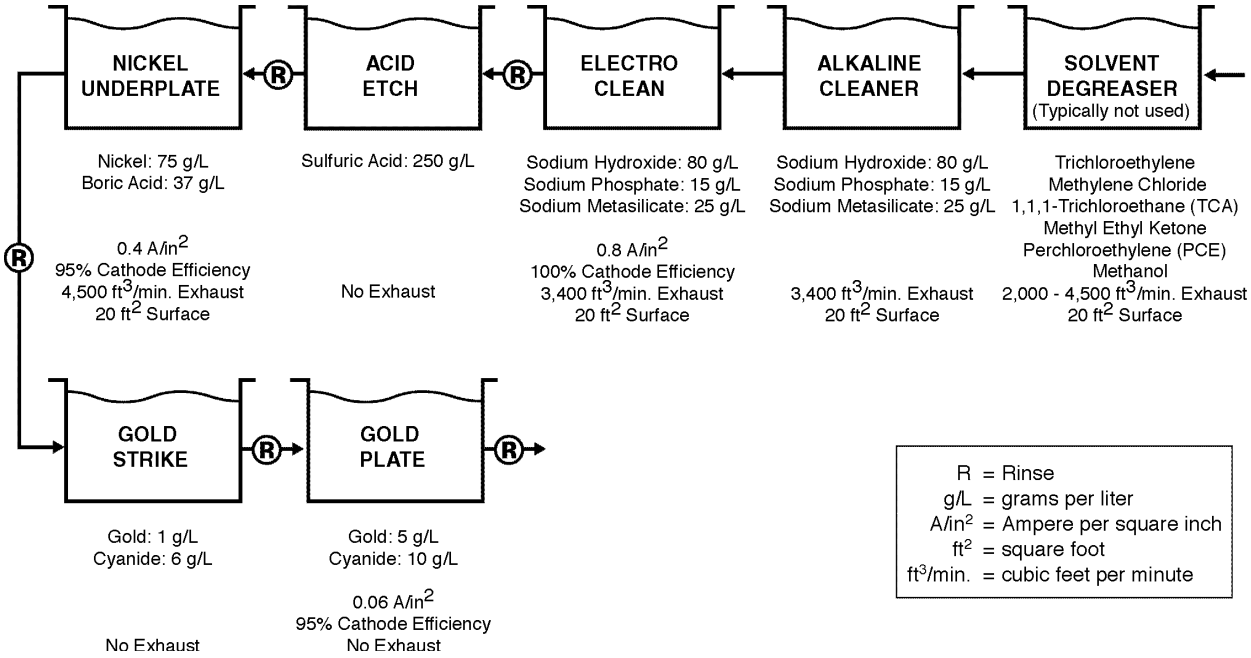

Figure 2-11. Gold Plating

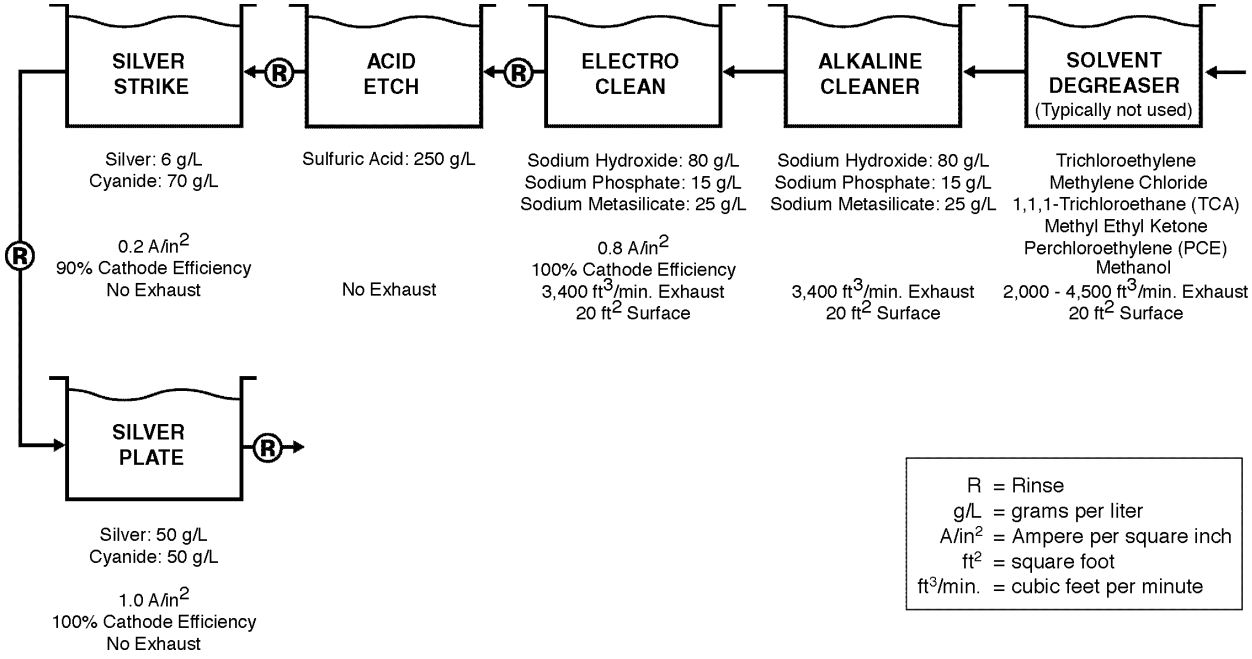

Figure 2-13. Silver Plating

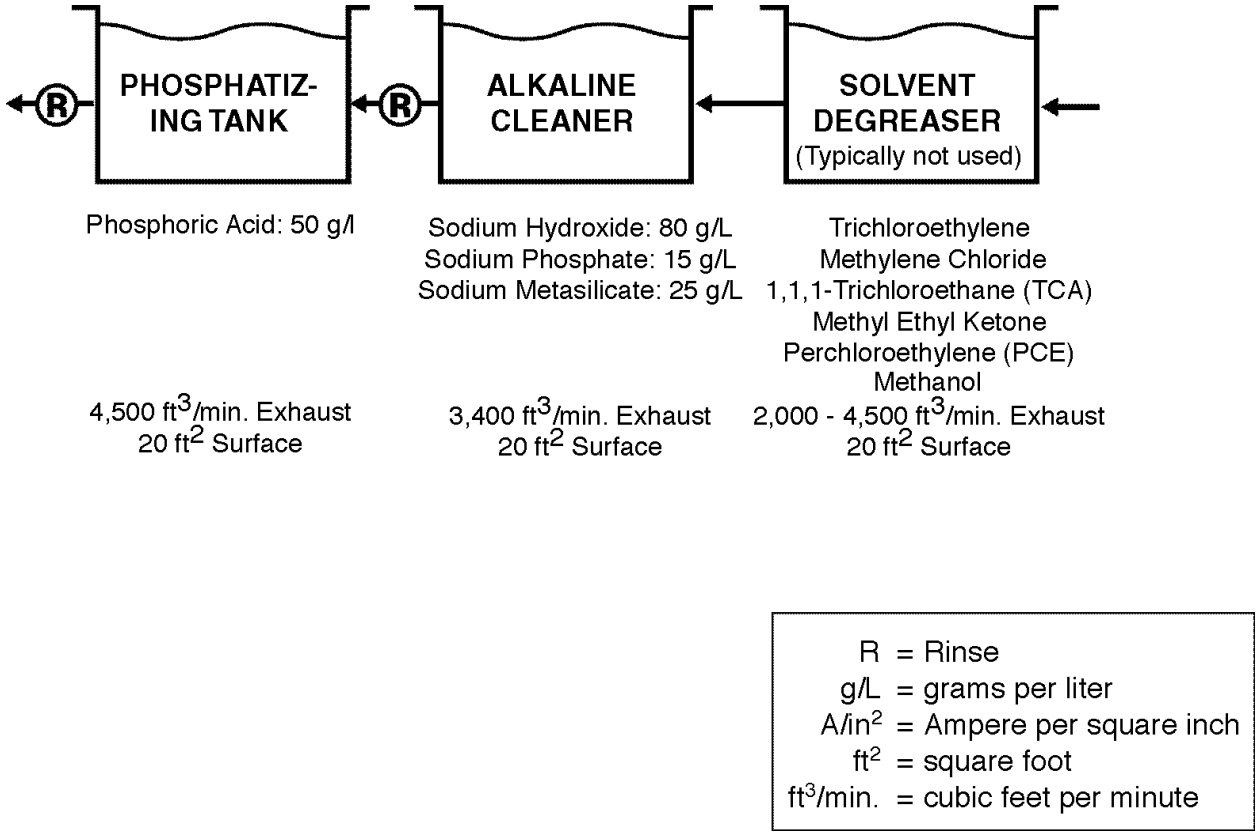

Figure 2-12. Phosphate Coating

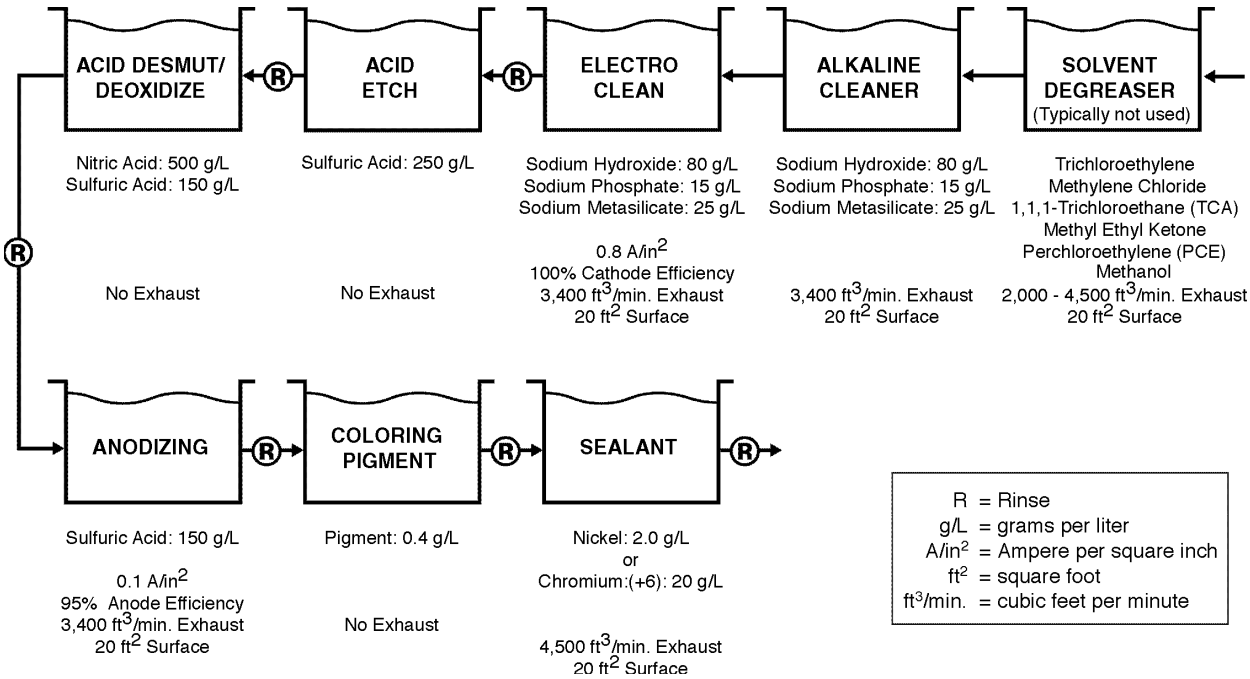

Figure 2-14. Anodizing - Sulfuric Acid

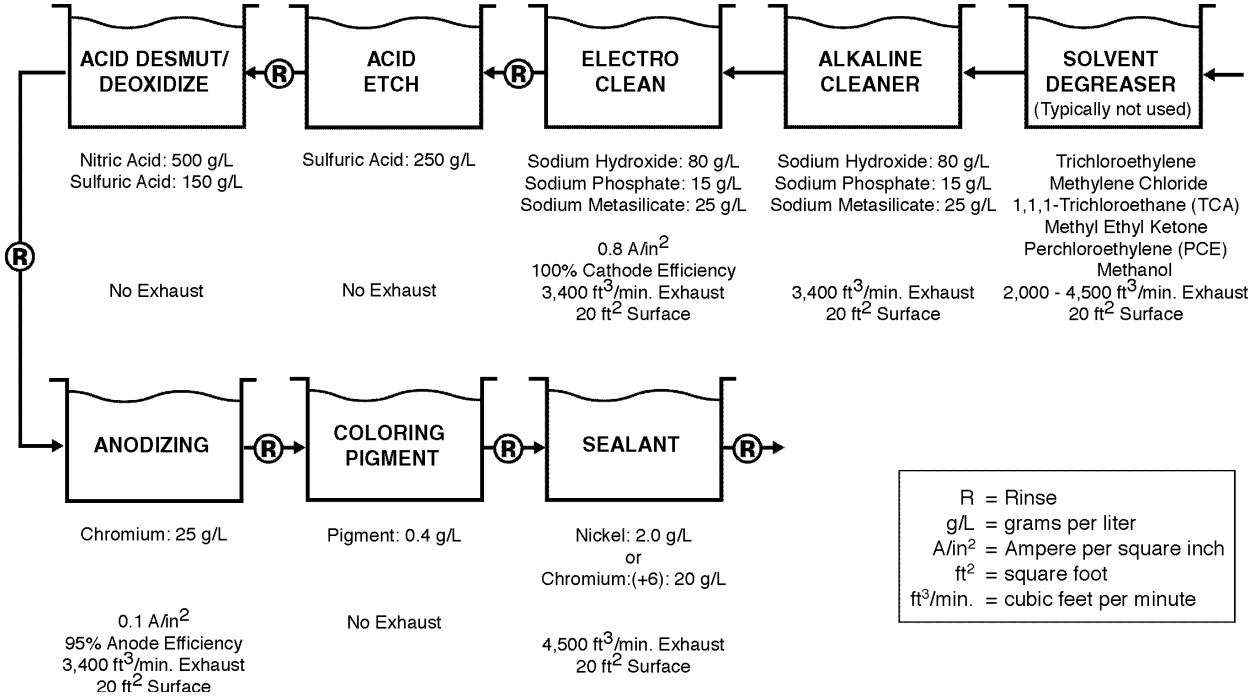

Figure 2-15. Anodizing - Chromic Acid

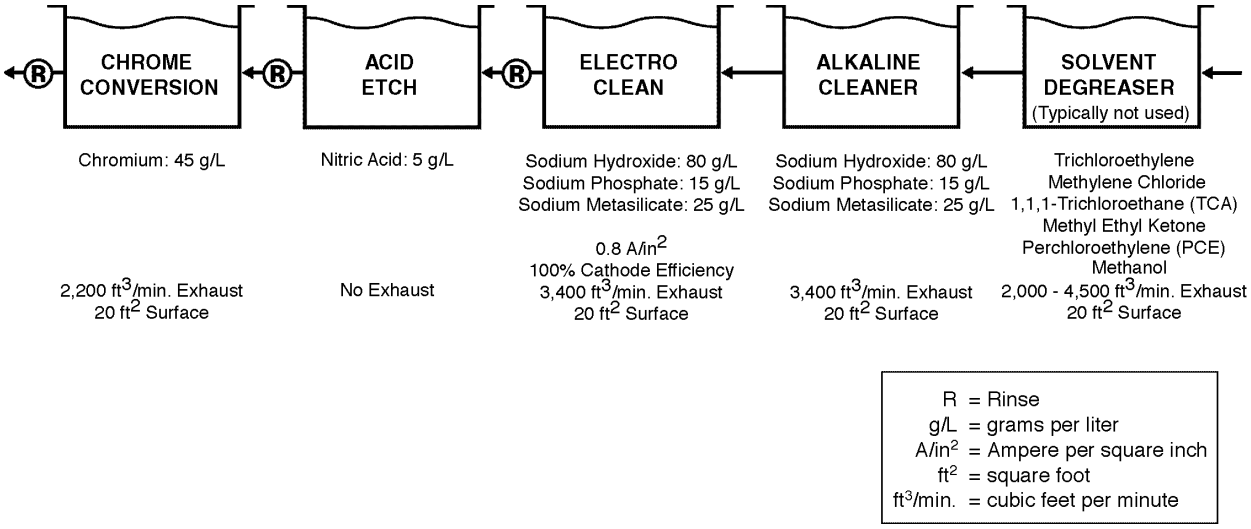

Figure 2-16. Chromate Conversion Coating

The last step in the chromium plating process is the plating of the chromium metal (followed by rinsing again). For "hard" chrome plating, a relatively thick layer of metal is plated, typically from 2.5 to 500 micrometers (µm) (0.1 to 20 thousandths of an inch [i.e., 1×10^{-4} to 2×10^{-2} inches)]. For decorative chromium plating, typically from 0.0025 to 2.5 µm (0.1 to 100 millionths of an inch [i.e., 10^{-7} to 10^{-4} inches]) are plated. The amount of time it takes to electroplate any metal on a substrate is inversely proportional to the amount of electrical current applied to the plating bath. Consequently, it takes more time to hard chrome plate than to decorative chrome plate, if the same amount of current is used. Because time is an expensive commodity (in addition to appearance-related issues), hard chromium plating is typically done with much higher electrical currents (i.e., current densities) to reduce the required time. Typically, Cr^{+6} plating is done in a warm bath (about 49°C [120°F]) containing about 160 g/L of chromium and about 2.5 g/L of sulfuric acid. Unlike almost all other electroplating processes, Cr^{+6} plating is electrically inefficient, only about 10 to 20 percent of the applied electrical current is actually used to create a metallic chromium coating. The balance of the current merely produces unneeded hydrogen and oxygen.

2.2.2.2. *Trivalent Chromium Electroplating*

Figure 2-3 presents the typical process steps for trivalent chromium electroplating. Each step is incorporated into MFFRST and is briefly described below.

Whereas hexavalent chromium electroplating tanks contain chromium in its more toxic hexavalent state (as the anion dichromate), trivalent chromium plating uses the much less toxic cationic trivalent chromium ion. In addition to being less toxic, trivalent chromium is much more efficient with respect to electrical usage. Hexavalent chromium is the classical method of plating chromium, because trivalent chromium plating has historically yielded much poorer quality surface characteristics. It is only in recent years that trivalent chromium plating tank chemicals have been formulated in a way that the resulting plated metal characteristics are competitive with Cr^{+6}. (Most of these formulations are proprietary.) However, there is a practical limit to the thickness to which trivalent chromium can be electroplated. Consequently, trivalent chromium cannot be used for hard chromium plating applications. Trivalent chromium is typically plated from a warm bath (43°C [110°F]) containing about 10 g/L of chromium and about 50 g/L of boric acid.

As with hexavalent chromium (and all other plated metals), it is necessary to degrease/clean the substrate prior to electroplating. After cleaning, it is normal to acid etch the substrate and then apply a coat of electroplated nickel prior to applying the trivalent chromium coating. Unlike hexavalent chromium, trivalent chromium may require an additional process step, namely the application of a passivating rinse, typically a relatively dilute (about 3 to 4 g/L) warm solution

(about 60°C [140°F]) of hexavalent chromium. Consequently, hexavalent chromium may still be associated with trivalent chromium electroplating.

2.2.2.3. *Nickel Electroplating*

Figure 2-4 presents the typical process steps for nickel electroplating. Each step is incorporated into MFFRST and is briefly described below.

Nickel plating provides a hard corrosion-resistant surface. Frequently, nickel is plated over other metals, such as copper. Nickel plating almost always precedes decorative chromium plating. After degreasing/cleaning, an acid etch bath typically precedes conventional nickel electroplating. The nickel electroplating bath consists of about 75 g/L of nickel and about 37 g/L of boric acid, and is operated at about 60°C (140°F).

2.2.2.4. *Electroless Nickel Plating*

Figure 2-5 presents the typical process steps for electroless nickel plating. Each step is incorporated into MFFRST and is discussed below.

As the name implies, nickel can be plated without the application of an electric current. It is plated from a hot (80°C [190°F]) bath that typically contains 10 g/L nickel and 20 g/L sodium hypophosphite. The hypophosphite is a reducing agent that converts the nickel from the cationic form to the base metal. Because the reducing agent is in the same bath with the nickel salts, the bath is relatively unstable. Therefore, additives, such as chelating agents, are included to minimize nickel plating out on bath particulate matter and tank surfaces. Electroless plating is ideal for plating on plastics, because plastics will not carry electrical current. Typically, the plastics are first "activated" in a bath containing a very dilute (0.1 g/L) acidified palladium solution. After electroless nickel, other metals, such as chromium, can be plated on the nonconductive nickel surface.

2.2.2.5. *Copper Cyanide Electroplating*

Figure 2-6 presents typical process steps for copper cyanide electroplating. Each of these steps is incorporated into MFFRST and is briefly described below.

Copper plating is conducted for its decorative or electrically conductive properties, as well as being a base for subsequent plating, such as nickel. The most conventional form of copper plating is from a warm bath (about 71°C [160°F]) containing about 20 g/L of copper, combined with about

30 g/L of cyanide ion. To prevent unwanted deposits over certain metals, such as zinc, and to produce improved adhesion over steel, the copper plating bath is usually preceded by a copper "strike" bath, which deposits a relatively thin copper layer. The strike bath is typically about 54°C (130°F), with only 18 g/L of copper and about 26 g/L of cyanide. The copper strike bath is operated at about half the current density of the copper plating bath and is much less electrically efficient than the copper plating bath, which is why it is only used to deposit a thin layer of copper. As with other plated metals, the copper strike and plating operations are usually preceded by degreasing/cleaning, as well as an acid etch.

2.2.2.6. *Acid Copper Electroplating*

Figure 2-7 presents typical process steps for acid copper electroplating. Each of these steps is incorporated into MFFRST and is briefly described below.

Electroplating copper from an acidified solution of copper sulfate instead of from a cyanide bath has the advantage of minimizing the use of cyanide salts, which are typically a significant wastewater treatment expense. Acid copper electroplating is typically conducted at room temperature or slightly higher from a bath containing about 55 g/L of copper and about 55 g/L of sulfuric acid. (For printed circuit board manufacture, about 200 g/L of sulfuric acid is used.) As with conventional copper electroplating from a cyanide bath, a copper strike is usually required when plating on steel or zinc. Typically, the strike is applied from a cyanide bath, as described in Section 2.2.2.5. Consequently, cyanide is not completely eliminated when using acid copper plating. A nickel strike may sometimes be used instead of a copper strike prior to acid copper electroplating. Again, degreasing/cleaning and acid etching are typically performed prior to the copper strike.

2.2.2.7. *Cadmium Electroplating*

Figure 2-8 presents typical process steps for cadmium electroplating. Each of these steps is incorporated into MFFRST and is briefly described below.

Cadmium is electroplated almost exclusively from a cyanide bath containing 12-20 g/L of cadmium, 25 g/L of cyanide, and 20-28 g/L of sodium hydroxide. The bath is typically maintained at about room temperature. Cadmium provides a corrosion resistant coating, used mostly on steel parts, especially those intended for outdoor use. The use of cadmium is being phased out because of the relatively toxic characteristics of cadmium. In many cases, zinc electroplating is an acceptable substitute. As with other electroplating operations, parts to be cadmium plated are usually degreased/cleaned and acid etched prior to the plating step.

2.2.2.8. *Zinc Cyanide Electroplating*

Figure 2-9 presents typical process steps for zinc cyanide electroplating. Each of these steps is incorporated into MFFRST and is briefly described below.

Conventional zinc electroplating is conducted in a bath that is slightly above room temperature, containing about 35 g/L of zinc, 100 g/L of cyanide ion, and 75 g/L of sodium hydroxide. As with cadmium, zinc plating is employed primarily for its corrosion resistance. A chromate conversion tank (see Section 2.2.2.15) containing 4-7 g/L hexavalent chromium and/or a "bright dip" containing about 5 g/L of nitric acid typically follow zinc plating. The usual degreasing/cleaning steps precede zinc plating, although the acid etch is typically conducted using about 100 g/L of hydrochloric acid.

2.2.2.9. *Zinc Chloride Electroplating*

Figure 2-10 presents typical process steps for zinc plating. Each of these steps is incorporated into MFFRST and is briefly described below.

In order to avoid the use of cyanide-based zinc electroplating, zinc electroplating from an acidic chloride bath has gained popularity. Also, chloride-based zinc plating is more electrically efficient than the cyanide-based process. About 40 g/L of zinc are contained in a bath at about room temperature. The usual degreasing/cleaning and acid etching steps precede zinc chloride electroplating and a chromate conversion and/or bright dip follow.

2.2.2.10. *Zinc, Alkaline, Non-Cyanide Electroplating*

This popular zinc plating process has the same process tanks as zinc cyanide electroplating, but there is no cyanide in the plating tank. The plating tank contains about 15 g/L of dissolved zinc, and about 115 g/L of sodium hydroxide.

2.2.2.11. *Gold Electroplating*

Figure 2-11 presents typical process steps for gold plating. Each of these steps is incorporated into MFFRST and is briefly described below.

Gold, like zinc and copper, can be commercially electroplated from cyanide, low cyanide, or non-cyanide bath formulations. The most prevalent formulation for plating decorative gold is a

cyanide-based bath (typically potassium gold cyanide in slightly acid solution) with operating temperatures ranging from 10 to 66°C (50 to 150°F). The concentration of dissolved gold is about 5 g/L, but varies greatly. Complexed cyanide concentrations are about 10 g/L. As with copper, it is normal to precede gold electroplating with a gold strike with about 1 g/L of gold and about 6 g/L of complexed cyanide. The usual degreasing/cleaning and acid etching steps precede gold plating. Because of the value of gold, emissions to the atmosphere or wastewater discharges from gold plating are negligible, as they are for the plating of any precious metals.

2.2.2.12. *Phosphate Coating*

Figure 2-12 presents typical process steps for phosphate coating. Each of these steps is incorporated into MFFRST and is briefly described below.

Phosphate coating (also called phosphatizing) is a nonelectrolytic process in which steel or aluminum parts are dipped in a hot (about 82°C [180°F]) bath containing about 50 g/L of phosphate salts and dissolved iron salts. The process deposits a phosphate coating on the parts, providing a level of corrosion resistance as well as a base for subsequent painting. For greater corrosion protection, zinc or manganese salts may be added to the phosphatizing bath, which forms a zinc or manganese phosphate coating on the parts. As with other forms of coating, degreasing/cleaning precedes phosphate coating.

2.2.2.13. *Silver Plating*

Figure 2-13 presents typical process steps for silver plating. Each of these steps is incorporated into MFFRST and is briefly described below.

Silver, like zinc and copper, is typically commercially electroplated from cyanide formulations. The most prevalent formulation for plating silver is a cyanide-based bath with operating temperatures at or about room temperature. The concentration of silver ions is about 50 g/L, but varies greatly. Cyanide ion concentrations are also about 50 g/L. As with copper, it is normal to precede silver electroplating with a silver strike with about 6 g/L of silver and about 70 g/L of cyanide. The usual degreasing/cleaning and acid etching steps precede silver plating. Because of the value of silver, emissions to the atmosphere or wastewater discharges from silver plating are negligible, as they are for the plating of any precious metals.

2.2.2.14. *Anodizing*

Figures 2-14 and 2-15 present typical process steps for sulfuric acid anodizing and chromic acid anodizing, respectively. Each of these steps is incorporated into MFFRST and is briefly described below.

Anodizing is an electrolytic process. However, unlike electroplating, no metal deposition takes place because the part to be anodized is not at the cathode (where metals are plated in electroplating processes), but at the anode. While the cathode provides a reducing environment to convert metal cations to the base (i.e., zero valence) state, the anode provides an oxidizing environment. As such, protective oxide films are formed at the anode. Anodizing is applied primarily to aluminum and magnesium. There are two basic types of anodizing: sulfuric acid anodizing and chromic acid (which contains Cr^{+6}) anodizing. After degreasing/cleaning and acid etching/desmutting, anodizing is typically conducted in a bath at about 35°C (95°F) (although "hard anodizing" is conducted in baths at about 30°F), containing either 100 g/L chromic acid or 10 - 20 percent sulfuric acid (100 to 200 g/L). After anodizing, dyes are frequently applied to impart a yellow, green, or brown color, after which the anodized parts are subject to a hot (99°C [210°F]) sealant bath, typically containing 2 to 3 g/L of dissolved nickel or 15-100 g/L of potassium dichromate.

2.2.2.15. *Chromium Conversion*

Figure 2-16 presents typical process steps for chromate conversion coating. Each of these steps is incorporated into MFFRST and is briefly described below.

Chromium conversion is a nonelectrolytic process in which parts are dipped in a chromic acid bath, at about room temperature to about 8°C (15°F) above room temperature, containing about 45 g/L hexavalent chromium (Cr^{+6}). A chromium oxide coating is deposited on the parts, providing a level of corrosion resistance and a yellow/green color. As with plated parts, degreasing/cleaning precedes chromate conversion.

2.3. CHARACTERIZATION OF EMISSIONS

There are two principal options available to the model user to characterize emissions. The first entails characterizing emissions from the outdoor stack in units of pounds per year, or similar mass per time units. Exposures to individuals residing near the metal finishing facilities are the only potentially exposed population evaluated with this option. The other option entails describing

emissions from the individual tank processes within a plating line into the workplace and also emissions vented through outdoor stacks after pollution control. For this option, both indoor exposures to workers and outdoor exposures to nearby residents are evaluated. This section describes the procedures for estimating emissions with both of these options.

2.3.1. The TRI Data Base and Procedures for Estimating Annual Emissions

Provided with this tool is a default data base containing emissions data from electroplating facilities that have reported to EPA's 1997 Toxics Release Inventory (TRI). The model user can either use this reported data directly or can input facility emissions in similar units to evaluate nearby residential impacts.

The facility-specific scenario uses publicly available air emissions data reported by metal finishing plants to the U.S. EPA as part of TRI. To support this option in MFFRST, the air emissions data (both stack and fugitive emissions) were retrieved for the 426 metal finishing facilities (SIC Code 3471) in TRI. In 1997, more than 4.3 million pounds of 49 TRI chemicals, 3.1 million pounds in stack releases, and 2.3 million pounds in fugitive releases were reported to be emitted by these 426 facilities, including many of the chemicals of concern for this effort. Most notably, TRI data include emissions of chromium (and chromium compounds), other metals, and chlorinated solvents used in vapor degreasing of metal parts prior to plating. TRI emissions data are used by MFFRST to estimate residential exposures only. It is inappropriate to use TRI data for occupational exposures because these data represent the emissions leaving the plant to the outdoor environment rather than emissions into the workplace. Source emission rates to the occupational environment are estimated by MFFRST in the generic process and user-defined scenarios.

The user may elect to use a user-supplied source of data rather than TRI data for the facility-specific option in MFFRST. The User's Guide for MFFRST (see Appendix 1) lists the databases used for this option of the tool, as well as the structures of those files. There are a number of ways the user can insert new facility-specific data. One method is to manually enter the data into the existing databases using a database application (such as dBase© or Access©) or a spreadsheet application (such as Excel© or Lotus©). Another alternative is to append the new data to the existing databases. Again, this can be done using dBase©, or any other database application. A third alternative is to create new databases and replace the existing ones. The user should be warned that the database names, structures, and field names must be identical to the existing databases in order for MFFRST to work properly. It should also be noted that the new database files must also be dBase files. Most database applications will allow the user to convert their database to dBase format. The user should convert their databases to a dBase III format, if possible. The User's Guide

in Appendix 1 provides further information on the format of the MFFRST default databases. User's manuals and help screens in various database and spreadsheet applications provide guidance on editing, appending, and creating databases.

2.3.2. Quantifying Emissions from Plating Process Lines

This section describes the models and assumptions used to quantify emissions from the individual tanks which comprise the "generic" 17 line processes described above. Instead of selecting (and then editing, if he/she so desires) one of the 17 processes, users can design their own metal finishing lines by identifying and characterizing each process tank and all the parameters necessary for estimating emissions each defined tank in order to characterize both indoor and outdoor emissions. A complete set of default parameters values are provided for each of the fully developed generic process lines, as well as for the various individual processes tank users can select to build their own process lines. These default parameters are designed to be "typical" of the industry.

Because each electroplating process tank contains aqueous liquids (or organic vapors in the case of solvent cleaning), there are at least emissions of water vapor (or organic fumes from solvent cleaning) from every process tank. Significant sources of atmospheric emissions are likely to be from tanks containing relatively concentrated amounts (typically in the range of 5 to 30 percent by weight) of dissolved metal salts, acids, or alkali. These include tanks used for alkali cleaning, acid cleaning, and metal plating. In addition, solvent degreasing operations are 100 percent volatile organic solvents, which vaporize into the shop environment, and/or are externally ventilated.

Metal air contaminants, which are all water-soluble metal salts, are emitted from plating tanks (and other electroplating shop operations) in the form of metals dissolved in an aerosol mist. Similarly, alkalis and other chemicals used in metal cleaning operations are water-soluble. These are primarily inorganic salts (e.g., sodium hydroxide, sodium carbonate, calcium hydroxide, potassium hydroxide, sodium phosphate, anionic/cationic/nonionic surfactants), which are also emitted to the plant environment dissolved in aerosol mists. Most acids used in acid cleaning operations are not significantly volatile, except at very high temperatures and at high concentrations. Consequently, acids are also primarily emitted as aerosol mists (as opposed to volatilized gases). Various additional chemicals are used in much smaller quantities. The functions of these additional chemicals include use as wetting agents, "brighteners," leveling agents, pH buffering compounds, and complexing agents. Because their concentrations are small, their relative rates of emission are also small.

The amount of emissions from any particular tank to the facility atmosphere depends on several factors:

- Concentration of chemicals in tank;
- Tank temperature (which affects the need for ventilation);
- Tank surface area;
- Rate of tank aeration, if any;
- Electrical current input to plating tanks;
- Electrical efficiency with respect to gassing (especially important for hexavalent chromium plating);
- Concentration of chemical mist suppressants (which reduce tank contents' surface tension and/or create foam blankets);
- Presence of mechanical covering (physical covers or floating plastic balls); and
- Volatility of organic solvents (for solvent degreasers only).

Where occupational exposure to uncontrolled emissions is considered excessive, either as a result of occupational health regulations or for any other reason, fumes are removed by exhausting them to the facility exterior through the appropriate ductwork and fan system(s). The efficiency with which the emissions/fumes are removed from the plant environment is a function of:

- Rate of ventilation (i.e., exhaust air flow rate);
- Placement and efficiency of the inlet to the ventilation system (i.e., inlet ductwork design); and
- The rate at which makeup air is supplied to the facility.

It is recognized that no two electroplating shops contain the same electroplating processes, nor do such shops have the same volume of work. Even if two shops perform electroplating of the same metal on the same substrate (e.g., chromium plated on steel), it is unlikely that their production lines will be the same size, have the same process tank chemistries, or have the same ventilation characteristics. In fact, an infinite number of combinations of variables are found in electroplating shops, most of which will affect emissions to the atmosphere.

For example, more atmospheric emissions can be expected from an open process tank that has the following operating parameters:

- More concentrated chemical contents;
- More turbulent mixing;

- Larger surface area;
- Larger rate of ventilation; and
- Less effective air pollution control devices.

These and other operating parameters are taken into account by MFFRST when atmospheric emissions (external to the facility) and indoor fugitive emissions are estimated. This section provides emissions data for the 17 electroplating shop process lines that were described in Section 2.2. The basis of the emissions estimates are data developed for hard chromium electroplating through a study sponsored by the U.S. EPA and industry. The hard chromium data were extrapolated to other electroplating shop operations, based on the relative values of the appropriate operating parameters.

As noted earlier, users have the capability to "build" a surface coating line tank-by-tank to include personalized variations applicable to his/her shop. For example, the user may choose the concentrations of chemicals within the tanks, the electroplating current density, the tank surface area, and the tank ventilation rates.

In addition to calculating uncontrolled emissions, the model will calculate emissions from about a dozen combinations of air pollution control devices (e.g., packed bed scrubbers, mesh pads, chevron-type mist eliminators, fume suppression bath additives, polymer balls). It should be noted that emissions from rinse tanks, which follow almost every electroplating process tank, are not included in the analysis. It is assumed that air emissions from rinse tanks are negligible compared to other process tanks (aside from water vapor, which is not a health risk).

This study uses as a basis and a starting point for all of its emission calculations the following two documents:

- *Hard Chrome Pollution Prevention Demonstration Project*, Interim Report, by the U.S. EPA Common Sense Initiative (CSI), Metal Finishing Subcommittee (U.S. EPA, 1996); and
- *Compilation of Air Pollutant Emission Factors* (U.S. EPA, 1995).

The CSI report (U.S. EPA, 1996) is an excellent study of total and hexavalent chromium emissions from hard chromium plating tanks in several electroplating shops. It attempts to relate operating parameters, such as current density, use and concentration of fume suppressants, use of polymer balls, and various combinations of air pollution control devices, to total and hexavalent chromium (Cr^{+6}) emissions. Significant attention is given to sampling and analytical detail. For

example, more than one technique was used for some analyses of air emissions. Also, duplicate data from different laboratories are presented. This document was jointly sponsored by EPA and industry; therefore, it is considered to be an extremely credible quantitative work on the subject. Consequently, data from this document were used as much as possible in the development of MFFRST.

AP-42 (U.S. EPA, 1995) provides chemical emission factors for many industrial sectors. EPA routinely updates the emission factors as better (or additional) data become available. The document is to be used for guidance purposes only. EPA rates the data quality in AP-42 on a scale of A to E; A being excellent quality, and E being poor. With respect to the quality of the data on electroplating (Section 12.20 of AP-42), EPA rated almost all of the data D or E. AP-42 contains data on hard chromium electroplating and chromic acid anodizing, and only 1 datum on decorative chromium electroplating. For other electroplating processes, AP-42 recommends extrapolation from the hard chromium data.

The methodology used by MFFRST to determine mass emission rates (e.g., milligrams per day [mg/day]) of electroplating industry bath components required the following steps:

- Determine the concentration of emissions from each process tank (e.g., milligrams per cubic meter [mg/m^3]) based on CSI data;
- Estimate the rate of ventilation of each process tank (e.g., cubic feet per minute [ft^3/min]); and
- Combine the concentration and ventilation rate data to determine the mass emission rate.

2.3.2.1. *Electroplating and Other Electrolytic Processes*

The concentrations of constituent emissions to the atmosphere from electrolytic tanks (electroplating and anodizing) are proportional to:

- The current density applied to perform the plating operation;
- The inverse of the cathode efficiency; and
- The concentration of the chemical components in the process tank.

Cathode efficiency is the fraction of the applied electrical power that results in deposition of metal on the substrate (which is the cathode). For most plated metals, the efficiency exceeds 90 percent. However, for hard and decorative chromium from Cr^{+6} baths, it is typically less than 20 percent. The portion of the electrical power that does not result in metal deposition is spent on decomposition of

the water in the bath into hydrogen and oxygen. Production of hydrogen and oxygen produces turbulence that contributes to atmospheric emissions.

This relationship is supported by AP-42 (U.S. EPA, 1995). Further, in order to determine emissions from other electrolytic baths, AP-42 recommends extrapolation from hard chromium plating data using these three factors. Consequently, for this risk assessment tool, the emission concentration data for hard chromium electroplating baths from the CSI report (U.S. EPA, 1996) is extrapolated to electroplating baths for other chemicals using the three factors noted above in the following relationship:

$$RC_c = \frac{(CC_c\ CD_c)\ /\ (CE_c)}{(CC_{Cr}\ CD_{Cr})\ /\ (CE_{Cr})}$$

where RC_c is the concentration of the chemical relative to the concentration of Cr^{+6} above a hard chromium plating bath; CC_c and CC_{Cr} are the concentrations of the chemical in the plating bath of interest (c) and the concentration of Cr in the hard chromium plating bath (Cr), respectively; CD_c and CD_{Cr} are the current densities of the bath of interest (c) and of the chromium hard plating bath (Cr), respectively; and CE_c and CE_{Cr} are the cathode efficiencies of the bath of interest (c) and of the chromium hard plating bath (Cr), respectively.

Consequently, for the procedures used in this chapter, the quality of emission concentration data for hard chromium electroplating baths from the CSI report (U.S. EPA, 1996) is extrapolated to electroplating baths for other metals using the three factors noted above. Table 2-1 provides the typical values of the three factors, as well as the relative values of electrolytic bath emissions as compared to hard chromium. Model users can change the default values of constituent bath concentration, current density, and cathode efficiency to suit his/her needs.

Electrocleaning and anodizing baths, which are electrolytic processes, are also included in relative emissions estimates. Electrocleaning is a process similar to alkaline cleaning, except electrocleaning baths are electrolytically activated, such that current passes through them. Anodizing is a process in which the metal substrate (usually aluminum or magnesium) forms the anode. With application of electrical current, a protective oxide coating forms on the substrate, rather than a coating of plated metal.

Table 2-1. Relative Concentrations of Uncontrolled Atmospheric Emissions from Various Surface Coating Operations in the Electroplating Industry

Type of Plating-Related Process Operation	Chemical of Concern	Concentration of Chemical in Bath** (gm/lit.)	Typical Current Density** (amp/sq.in.)	Cathode Efficiency** (%)	Concentration of Emissions Relative to Chromium Emiss. from Hard Chromium Plating Tanks* (no units)
I. ELECTROLYTIC PROCESSES					
Hard Chromium Plating Bath	Chromium (+6)	160	1.5	15	1.0e+00
	Sulfuric Acid	2.5	1.5	15	1.6e-02
Decorative Chromium Plat. Bath	Chromium (+6)	164	1	15	6.8e-01
	Sulfuric Acid	1.6	1	15	6.7e-03
Trivalent Chromium Plating Bath	Chromium (+3)	10	0.5	95	3.3e-03
Nickel Plating Bath	Nickel	75	0.4	95	2.0e-02
Anodizing, Sulfuric Acid	Sulfuric Acid	150	0.1	95	9.9e-03
Anodizing, Chromic Acid	Chromic Acid	100	3	95	2.0e-01
Gold Plating Bath	Gold	5	0.06	95	2.0e-04
	Cyanide (CN)	10	0.06	95	3.9e-04
Copper Strike Bath	Copper	18	0.15	40	4.2e-03
	Cyanide (CN)	26	0.15	40	6.1e-03
Copper (Cyanide) Plating Bath	Copper	20	0.3	100	3.8e-03
	Cyanide (CN)	30	0.3	100	5.6e-03
Copper (Acid) Plating Bath	Copper	55	0.35	95	1.3e-02
	Sulfuric Acid	55	0.35	95	1.3e-02
Cadmium Plating Bath	Cadmium	20	0.3	90	4.2e-03
	Cyanide (CN)	25	0.3	90	5.2e-03
Zinc (Cyanide) Plating Bath	Zinc	35	0.35	70	1.1e-02
	Cyanide (CN)	100	0.35	70	3.1e-02
Zinc (Chloride) Plating Bath	Zinc	40	0.28	95	7.4e-03
Zinc (Alk. Non-Cyan.) Plating Bath	Zinc	15	0.15	75	1.9e-03
	Sodium Hydroxide	115	0.15	75	1.4e-02
Silver Strike Bath	Silver	6	0.2	90	8.3e-04
	Cyanide (CN)	70	0.2	90	9.7e-03
Silver Plating Bath	Silver	50	1	100	3.1e-02
	Cyanide (CN)	50	1	100	3.1e-02
Electrocleaning	Sodium Hydroxide	80	0.8	100	4.0e-02
	Sodium Phosphate	15	0.8	100	7.5e-03
	Sodium Metasilicate	25	0.8	100	1.3e-02
II. NON-ELECTROLYTIC PROCESSES					
Alkaline Cleaning Bath (typical)	Sod. Hydroxide	80	n/a	n/a	n/a
	Sod. Phosphate	15	n/a	n/a	n/a
	Sod. Metasilicate	25	n/a	n/a	n/a
Acid Etch/Desmut Bath (typical)	Sulfuric Acid	250	n/a	n/a	n/a
Acid Desmutt/Deoxidize	Nitric Acid	500	n/a	n/a	n/a
	Sulfuric Acid	150	n/a	n/a	n/a
Phosphate Coating Bath	Phosphoric Acid	50	n/a	n/a	n/a
Nickel Plating Bath (Electroless)	Nickel	10	n/a	n/a	n/a
	Sod. Hypophosph.	20	n/a	n/a	n/a
Anodizing Sealer	Nickel	2	n/a	n/a	n/a
	Chromium (+6)	20	n/a	n/a	n/a
Chromate Conversion Bath	Chromium (+6)	45	n/a	n/a	n/a
Hexavalent Chromium Passiv.	Chromium (+6)	3	n/a	n/a	n/a
Acid Etch (for Zinc Plating)	Hydrochloric Acid	100	n/a	n/a	n/a

Table 2-1. Relative Concentrations of Uncontrolled Atmospheric Emissions from Various Surface Coating Operations in the Electroplating Industry (continued)

Type of Plating-Related Process Operation	Chemical of Concern	Concentration of Chemical in Bath** (gm/lit.)	Typical Current Density** (amp/sq.in.)	Cathode Efficiency** (%)	Concentration of Emissions Relative to Chromium Emiss. from Hard Chromium Plating Tanks* (no units)
III. SOLVENT DEGREASING					
	1,1,1-Trichloroethane	1,340	n/a	n/a	n/a
	Perchloroethylene	1,620	n/a	n/a	n/a
	Methanol	790	n/a	n/a	n/a
	Methyl Ethyl Ketone	810	n/a	n/a	n/a
	Trichloroethylene	1460	n/a	n/a	n/a
	Methylene Chloride	1330	n/a	n/a	n/a

* Equals: (0.0625) (current density)(concen. of sol'n)/(cathode efficiency)

** Sources: American Electroplaters' Society, Inc. (1969a, 1969b, 1970a, 1970b, 1972a, 1972b, 1973a, 1973b, 1974, 1975a, 1975b, undated); Dupont Industrial Chemicals Publications (1973, 1975, 1976, undated); Electroplating Engineering Handbook, 4th Ed. (1984, Reprinted 1998); Metal Finishing 99 Guidebook and Directory (Jan. 1999, Volume 97, No. 1)
For Anodizing Operations, the values are for anode efficiency (not cathode efficiency).

Table 2-2 presents emissions concentration data for all electrolytic processes, based on the CSI hard chromium data (U.S. EPA, 1996). Table 2-2 presents uncontrolled emissions data, as well as emissions data for various pollution control devices. These "devices" include suppression of emissions by including additives in the electroplating baths and by floating polymeric balls on the tank surface, as well as various "end-of-pipe" capture devices. AP-42 (U.S. EPA, 1995) data were used for determining hard chromium plating emission values for the packed bed scrubber/mist eliminator pollution control device combination because this combination did not exist in the CSI report. To derive the concentration emissions values for other electrolytic process baths, the CSI hard chromium chromium data are multiplied by the relative emissions factors shown in the last column of Table 2-1. For purposes of comparison to the CSI hard chromium data, the AP-42 data for hard chromium plating are presented at the top of Table 2-2. In general, the corresponding values differ by an order of magnitude or less. For uncontrolled emissions, the AP-42 data are about one-half the data in the CSI report. For all but one controlled emission scenario, AP-42 reports higher emission concentrations than CSI.

In order to determine the mass emissions rates (e.g., mg/day), it is necessary to combine the emissions concentration data presented in Table 2-2 with the process volumetric air flow rate (e.g., in ft^3/min of exhaust air). To determine process volumetric flow rates, the typical surface area of a ventilated process tank (in square feet [ft^2]) was multiplied by the minimum ventilation rate (in ft^3/min-ft^2) prescribed by the Occupational Safety and Health Administration (OSHA) (OSHA, 1998c). Table 2-3 presents OSHA ventilation categories for all electroplating process tanks, corresponding OSHA minimum ventilation rates, estimated typical process tank surface areas, and the calculated volumetric air flow rates.

OSHA ventilation categories are assigned alpha-numeric codes that assist in determining control ventilation velocity. The alphabetical symbol relates to the hazard level of the chemical component based on toxicity (i.e., "A" being most hazardous and "D" being least hazardous). The numeric designation relates primarily to the temperature/volatility characteristics of the material being ventilated. A liquid close to its boiling point receives a value of "1," and a liquid that is least volatile is given a rating of "4." Essentially, a material with a rating of A-1 will require the highest ventilation velocity, and a material with a rating of D-4 will require the least (or only general room ventilation). Once the ventilation category is determined, OSHA specifies the minimum ventilation rate for that category, based on the type of exhaust hood employed and the shape of the tank. For this study, it was assumed that a lateral exhaust hood was being used on an unbaffled tank that is not located adjacent to a wall and that the width to length ratio of the tank is between 0.5 and 0.99 (based on observations in numerous electroplating facilities). Other assumptions will change the required minimum ventilation rate shown in Table 2-3.

Table 2-2. Concentration Levels of Atmospheric Emissions With Various Control Devices For Various Surface Coating Operation in the Electroplating Industry (Mg/cu.meter)*

Type of Plating Operation	Chemical of Concern	Uncontrolled Emissions	Polymer Balls	Fume Suppressants (@<28 dyne/cm)	Fume Suppressants + Polymer Balls	Packed Bed Scrubber	Packed Bed Scrubber + Fume Suppress.+ Polymer Balls	Chevron Mist Eliminator	Series Dual Chevron Mist Eliminator	Mesh Pad Mist Eliminator	Packed Bed Scrubber + Mist Eliminator	Composite Mesh Pad Mist Eliminator	Composite Mesh Pad + Fume Suppressant	Chevron Mist Eliminat.+ Fume Suppressant
Hard Chromium Plating Bath (from AP-42 Data*)	Chromium	2.8e+00	9.6e-01	3.7e-01	6.9e-02	4.8e-02	6.0e-03	2.0e-01	n/a	2.7e-02	7.3e-05	8.7e-03	n/a	n/a
I. ELECTROLYTIC PROCESSES														
Hard Chromium Plating Bath (from Common Sense Initiative Data*)	Chromium (+6)	5.4e+00	2.3e-01	1.9e-02	6.2e-03	3.8e-02	2.2e-03	1.1e-01	4.9e-03	2.4e-02	7.3e-05	9.6e-03	6.0e-04	3.3e-03
	Sulfuric Acid	8.4e-02	3.6e-03	3.0e-04	9.7e-05	5.9e-04	3.4e-05	1.7e-03	7.7e-05	3.8e-04	1.1e-06	1.5e-04	9.4e-06	5.2e-05
Decorative Chromium Plat. Bath	Chromium (+6)	3.7e+00	1.6e-01	1.3e-02	4.2e-03	2.6e-02	1.5e-03	7.5e-02	3.3e-03	1.6e-02	5.0e-05	6.6e-03	4.1e-04	2.3e-03
	Sulfuric Acid	3.6e-02	1.5e-03	1.3e-04	4.1e-05	2.5e-04	1.5e-05	7.3e-04	3.3e-05	1.6e-04	4.9e-07	6.4e-05	4.0e-06	2.2e-05
Trivalent Chromium Plating Bath	Chromium (+3)	1.8e-02	7.6e-04	6.2e-05	2.0e-05	1.2e-04	7.2e-06	3.6e-04	1.6e-05	7.9e-05	2.4e-07	3.2e-05	2.0e-06	1.1e-05
Nickel Plating Bath	Nickel	1.1e-01	4.5e-03	3.8e-04	1.2e-04	7.5e-04	4.3e-05	2.2e-03	9.7e-05	4.7e-04	1.4e-06	1.9e-04	1.2e-05	6.5e-05
Anodizing, Sulfuric Acid	Sulfuric Acid	5.3e-02	2.3e-03	1.9e-04	6.1e-05	3.8e-04	2.2e-05	1.1e-03	4.8e-05	2.4e-04	7.2e-07	9.5e-05	5.9e-06	3.3e-05
Anodizing, Chromic Acid	Chromic Acid	1.1e+00	4.5e-02	3.8e-03	1.2e-03	7.5e-03	4.3e-04	2.2e-02	9.7e-04	4.7e-03	1.4e-05	1.9e-03	1.2e-04	6.5e-04
Gold Plating Bath	Gold	1.1e-03	4.5e-05	3.8e-06	1.2e-06	7.5e-06	4.3e-07	2.2e-05	9.7e-07	4.7e-06	1.4e-08	1.9e-06	1.2e-07	6.5e-07
	Cyanide (CN)	2.1e-03	9.1e-05	7.5e-06	2.4e-06	1.5e-05	8.7e-07	4.3e-05	1.9e-06	9.5e-06	2.9e-08	3.8e-06	2.4e-07	1.3e-06
Copper Strike Bath	Copper	2.3e-02	9.7e-04	8.0e-05	2.6e-05	1.6e-04	9.3e-06	4.6e-04	2.1e-05	1.0e-04	3.1e-07	4.1e-05	2.5e-06	1.4e-05
	Cyanide (CN)	3.3e-02	1.4e-03	1.2e-04	3.8e-05	2.3e-04	1.3e-05	6.7e-04	3.0e-05	1.5e-04	4.4e-07	5.8e-05	3.7e-06	2.0e-05
Copper (Cyanide) Plating Bath	Copper	2.0e-02	8.6e-04	7.1e-05	2.3e-05	1.4e-04	8.3e-06	4.1e-04	1.8e-05	9.0e-05	2.7e-07	3.6e-05	2.3e-06	1.2e-05
	Cyanide (CN)	3.0e-02	1.3e-03	1.1e-04	3.5e-05	2.1e-04	1.2e-05	6.2e-04	2.8e-05	1.4e-04	4.1e-07	5.4e-05	3.4e-06	1.9e-05
Copper (Acid) Plating Bath	Copper	6.8e-02	2.9e-03	2.4e-04	7.9e-05	4.8e-04	2.8e-05	1.4e-03	6.2e-05	3.0e-04	9.2e-07	1.2e-04	7.6e-06	4.2e-05
	Sulfuric Acid	6.8e-02	2.9e-03	2.4e-04	7.9e-05	4.8e-04	2.8e-05	1.4e-03	6.2e-05	3.0e-04	9.2e-07	1.2e-04	7.6e-06	4.2e-05
Cadmium Plating Bath	Cadmium	2.2e-02	9.6e-04	7.9e-05	2.6e-05	1.6e-04	9.2e-06	4.6e-04	2.0e-05	1.0e-04	3.0e-07	4.0e-05	2.5e-06	1.4e-05
	Cyanide (CN)	2.8e-02	1.2e-03	9.9e-05	3.2e-05	2.0e-04	1.1e-05	5.7e-04	2.6e-05	1.2e-04	3.8e-07	5.0e-05	3.1e-06	1.7e-05
Zinc (Cyanide) Plating Bath	Zinc	5.9e-02	2.5e-03	2.1e-04	6.8e-05	4.2e-04	2.4e-05	1.2e-03	5.4e-05	2.6e-04	8.0e-07	1.1e-04	6.6e-06	3.6e-05
	Cyanide (CN)	1.7e-01	7.2e-03	5.9e-04	1.9e-04	1.2e-03	6.9e-05	3.4e-03	1.5e-04	7.5e-04	2.3e-06	3.0e-04	1.9e-05	1.0e-04
Zinc (Chloride) Plating Bath	Zinc	4.0e-02	1.7e-03	1.4e-04	4.6e-05	2.8e-04	1.6e-05	8.1e-04	3.6e-05	1.8e-04	5.4e-07	7.1e-05	4.4e-06	2.4e-05
Zinc (Alk. Non-Cyan.) Plating Bath	Zinc	1.0e-02	4.3e-04	3.6e-05	1.2e-05	7.1e-05	4.1e-06	2.1e-04	9.2e-06	4.5e-05	1.4e-07	1.8e-05	1.1e-06	6.2e-06
	Sodium Hydroxide	7.8e-02	3.3e-03	2.7e-04	8.9e-05	5.5e-04	3.2e-05	1.6e-03	7.0e-05	3.4e-04	1.0e-06	1.4e-04	8.6e-06	4.7e-05
Silver Strike Bath	Silver	4.5e-03	1.9e-04	1.6e-05	5.2e-06	3.2e-05	1.8e-06	9.2e-05	4.1e-06	2.0e-05	6.1e-08	8.0e-06	5.0e-07	2.8e-06
	Cyanide (CN)	5.2e-02	2.2e-03	1.8e-04	6.0e-05	3.7e-04	2.1e-05	1.1e-03	4.8e-05	2.3e-04	7.1e-07	9.3e-05	5.8e-06	3.2e-05
Silver Plating Bath	Silver	1.7e-01	7.2e-03	5.9e-04	1.9e-04	1.2e-03	6.9e-05	3.4e-03	1.5e-04	7.5e-04	2.3e-06	3.0e-04	1.9e-05	1.0e-04
	Cyanide (CN)	1.7e-01	7.2e-03	5.9e-04	1.9e-04	1.2e-03	6.9e-05	3.4e-03	1.5e-04	7.5e-04	2.3e-06	3.0e-04	1.9e-05	1.0e-04

Table 2-2. Concentration Levels of Atmospheric Emissions With Various Control Devices For Various Surface Coating Operation in the Electroplating Industry (Mg/cu.meter)* (continued)

Type of Plating Operation	Chemical of Concern	Uncontrolled Emissions	Polymer Balls	Fume Suppressants (@<28 dyne/cm)	Fume Suppressants + Polymer Balls	Packed Bed Scrubber	Packed Bed Scrubber + Fume Suppress.+ Polymer Balls	Chevron Mist Eliminator	Series Dual Chevron Mist Eliminator	Mesh Pad Mist Eliminator	Packed Bed Scrubber + Mist Eliminator	Composite Mesh Pad Mist Eliminator	Composite Mesh Pad + Fume Suppressant	Chevron Mist Eliminat.+ Fume Suppressant
Electrocleaning	Sodium Hydroxide	2.2e-01	9.2e-03	7.6e-04	2.5e-04	1.5e-03	8.8e-05	4.4e-03	2.0e-04	9.6e-04	2.9e-06	3.8e-04	2.4e-05	1.3e-04
	Sodium Phosphate	4.1e-02	1.7e-03	1.4e-04	4.6e-05	2.9e-04	1.7e-05	8.2e-04	3.7e-05	1.8e-04	5.5e-07	7.2e-05	4.5e-06	2.5e-05
	Sodium Metasilicate	6.8e-02	2.9e-03	2.4e-04	7.8e-05	4.8e-04	2.8e-05	1.4e-03	6.1e-05	3.0e-04	9.1e-07	1.2e-04	7.5e-06	4.1e-05
II. NON-ELECTROLYTIC PROCESSES														
Alkaline Cleaning Bath (typical)***	Sod. Hydroxide	3.1e-01	1.3e-02	1.1e-03	3.5e-04	2.2e-03	1.3e-04	6.3e-03	2.8e-04	1.4e-03	4.2e-06	5.5e-04	3.4e-05	1.9e-04
	Sod. Phosphate	5.8e-02	2.5e-03	2.0e-04	6.6e-05	4.1e-04	2.3e-05	1.2e-03	5.2e-05	2.6e-04	7.8e-07	1.0e-04	6.4e-06	3.5e-05
	Sod. Metasilicate	9.6e-02	4.1e-03	3.4e-04	1.1e-04	6.8e-04	3.9e-05	2.0e-03	8.7e-05	4.3e-04	1.3e-06	1.7e-04	1.1e-05	5.9e-05
Acid Etch/Desmut Bath (typical)****	Sulfuric Acid	2.1e+01	8.9e-01	7.4e-02	2.4e-02	Bath not vented, hence no applicable air pollution control equipment								
Acid Desmutt/Deoxidize****	Nitric Acid	4.2e+01	1.8e+00	1.5e-01	4.8e-02	Bath not vented, hence no applicable air pollution control equipment								
	Sulfuric Acid	1.3e+01	5.4e-01	4.4e-02	1.4e-02									
Phosphate Coating Bath***	Phosphoric Acid	1.9e-01	8.0e-03	6.6e-04	2.1e-04	1.3e-03	7.6e-05	3.8e-03	1.7e-04	8.3e-04	2.5e-06	3.3e-04	2.1e-05	1.1e-04
Nickel Plating Bath (Electroless)***	Nickel	3.7e-02	1.6e-03	1.3e-04	4.3e-05	2.6e-04	1.5e-05	7.6e-04	3.4e-05	1.7e-04	5.0e-07	6.6e-05	4.2e-06	2.3e-05
	Sod. Hypophosphite	7.5e-02	3.2e-03	2.6e-04	8.6e-05	5.3e-04	3.0e-05	1.5e-03	6.8e-05	3.3e-04	1.0e-06	1.3e-04	8.3e-06	4.6e-05
Anodizing Sealer***	Nickel	4.9e-03	2.1e-04	1.7e-05	5.7e-06	3.5e-05	2.0e-06	1.0e-04	4.5e-06	2.2e-05	6.7e-08	8.8e-06	5.5e-07	3.0e-06
	Chromium (+6)	4.9e-02	2.1e-03	1.7e-04	5.7e-05	3.5e-04	2.0e-05	1.0e-03	4.5e-05	2.2e-04	6.7e-07	8.8e-05	5.5e-06	3.0e-05
Chromate Conversion Bath***	Chromium (+6)	3.4e-01	1.5e-02	1.2e-03	3.9e-04	2.4e-03	1.4e-04	7.0e-03	3.1e-04	1.5e-03	4.6e-06	6.1e-04	3.8e-05	2.1e-04
Hexavalent Chromium Passiv.***	Chromium (+6)	1.5e-02	6.3e-04	5.2e-05	1.7e-05	1.0e-04	6.0e-06	3.0e-04	1.3e-05	6.6e-05	2.0e-07	2.6e-05	1.6e-06	9.1e-06
Acid Etch (for Zinc Plating)****	Hydrochloric Acid	8.4e+00	3.6e-01	3.0e-02	9.6e-03	Bath not vented, hence no applicable air pollution control equipment								
III. SOLVENT DEGREASING**														
	1,1,1-Trichloroethane	1.8e+02	n/a	n/a	n/a	n/a	n/a	n/a	n/a	n/a	n/a	n/a	n/a	n/a
	Perchloroethylene	5.2e+01	n/a	n/a	n/a	n/a	n/a	n/a	n/a	n/a	n/a	n/a	n/a	n/a
	Methanol	1.4e+02	n/a	n/a	n/a	n/a	n/a	n/a	n/a	n/a	n/a	n/a	n/a	n/a
	Methyl Ethyl Ketone	2.6e+02	n/a	n/a	n/a	n/a	n/a	n/a	n/a	n/a	n/a	n/a	n/a	n/a
	Trichloroethylene	1.0e+02	n/a	n/a	n/a	n/a	n/a	n/a	n/a	n/a	n/a	n/a	n/a	n/a
	Methylene Chloride	3.8e+02	n/a	n/a	n/a	n/a	n/a	n/a	n/a	n/a	n/a	n/a	n/a	n/a

* Data for hard chromium plating represent average of relevant data from "Hard Chrome Pollution Prevention Demonstration Project", Interim Report, Nov 27, 1996, USEPA Common Sense Initiative, Metal Finishing Subcommittee (except for column with packed bed scrubber and mist eliminator, which is from USEPA's Compilation of Air Pollutant Emission Factors, AP-42, 5th Ed., Jan, 1995). Data for other electrolytic tanks is product of hard chromium plating tank data times factors in last column of Table 2-1.

** Emissions for solvent degreasing (in mg/cu.meter) are based on the AP-42 emissions factor for 1,1,1-trichloroethane of 0.15 lb/hr/sq.ft, for the surface area (20 sq.ft) and volumetric flow rate (4,500 CFM) given in Table 2-3.

*** Concentrations for Hexavalent Chromium Passivation, Electroless Nickel Plating, the Anodizing Sealer, Alkaline Cleaning, Phosphate Coating, and Chromate Conversion are back-calculated from Table 2-4 mass emission levels, combined with the volumetric flow rates in Table 2-3.

**** Concentrations of emissions for Acid Etching/Desmutting/Bright Dip processes are back-calculated from Table 2-4 mass emission levels, combined with aeration air volumetric flow rates (10 CFM per sq.ft. of tank surface, times the tank surface area from Table 2-3).

OSHA does not appear to require that these tanks be ventilated external to the plant. Consequently, the only applicable air pollution controls are polymer balls and/or fume suppressants.

Table 2-3. Ventilation Rates, Tank Surface Areas, and Volumetric Flow Rates for Various Surface Coating Operations in the Electroplating Industry

Type of Plating Operation	Chemical of Concern	Estimated OSHA Ventilation Category** (29CFR1910.94 (d)(2)(v)&(vii))	Minimum Ventilation Rate** (cu.ft./min-sq.ft) (29CFR1910.94(d)(4) (i),(ii), & (iii)(a)(2))	Estimated Tank Surface Area (sq.ft.)	Calculated Volumetric Flow Rates (cu.ft./min.)
I. ELECTROLYTIC PROCESSES					
Hard Chromium Plating Bath	Chromium (+6)	A-1	340	20	6,800
	Sulfuric Acid	B-1	225	20	4,500
Decorative Chromium Plat. Bath	Chromium (+6)	A-1	340	20	6,800
	Sulfuric Acid	B-1	225	20	4,500
Trivalent Chromium Plating Bath	Chromium (+3)	B-3	170	20	3,400
Nickel Plating Bath	Nickel	B-2	225	20	4,500
Anodizing, Sulfuric Acid	Sulfuric Acid	B-3	170	20	3,400
Anodizing, Chromic Acid	Chromic Acid	A-3	170	20	3,400
Gold Plating Bath	Gold	D-4	0	8	0
	Cyanide (CN)	C-4	0	8	0
Copper Strike Bath	Copper	D-3	0	20	0
	Cyanide (CN)	C-3	110	20	2,200
Copper (Cyanide) Plating Bath	Copper	D-2	110	20	2,200
	Cyanide (CN)	C-2	170	20	3,400
Copper (Acid) Plating Bath	Copper	D-4	0	20	0
	Sulfuric Acid	B-4	0	20	0
Cadmium Plating Bath	Cadmium	D-3	0	20	0
	Cyanide (CN)	C-3	110	20	2,200
Zinc (Cyanide) Plating Bath	Zinc	B-3	170	20	3,400
	Cyanide (CN)	C-3	110	20	2,200
Zinc (Chloride) Plating Bath	Zinc	B-4	0	20	0
Zinc (Alk. Non-Cyan.) Plating Bath	Zinc	B-4	0	20	0
	Sodium Hydroxide	C-2	170	20	3,400
Silver Strike Bath	Silver	A-4	110	8	880
	Cyanide (CN)	C-4	0	8	0
Silver Plating Bath	Silver	A-3	170	8	1,360
	Cyanide (CN)	C-3	110	8	880
Electrocleaning	Sod. Hydroxide	C-2	170	20	3,400
	Sod. Phosphate	D-2	110	20	2,200
	Sod. Metasilicate	D-2	110	20	2,200
II. NON-ELECTROLYTIC PROCESSES					
Alkaline Cleaning Bath (typical)	Sod. Hydroxide	C-2	170	20	3,400
	Sod. Phosphate	D-2	110	20	2,200
	Sod. Metasilicate	D-2	110	20	2,200
Acid Etch/Desmut Bath (typical)	Sulfuric Acid	C-4	0	20	0
Acid Desmutt/Deoxidize	Nitric Acid	B-4	0	20	0
	Sulfuric Acid	C-4	0	20	0
Phosphate Coating Bath	Phosphoric Acid	B-2	225	20	4,500
Nickel Plating Bath (Electroless)	Nickel	B-2	225	20	4,500
	Sod. Hypophosphite	D-2	110	20	2,200
Anodizing Sealer	Nickel	B-1	225	20	4,500
	Chromium (+6)	A-1	340	20	6,800
Chromate Conversion Bath	Chromium (+6)	A-4	110	20	2,200
Hexavalent Chromium Passivation	Chromium (+6)	A-3	170	20	3,400
Acid Etch (for Zinc Plating)	Hydrochloric Acid	C-4	0	20	0

Table 2-3. Ventilation Rates, Tank Surface Areas, and Volumetric Flow Rates for Various Surface Coating Operations in the Electroplating Industry (continued)

Type of Plating Operation	Chemical of Concern	Estimated OSHA Ventilation Category** (29CFR1910.94 (d)(2)(v)&(vii))	Minimum Ventilation Rate** (cu.ft./min-sq.ft) (29CFR1910.94(d)(4) (i),(ii), & (iii)(a)(2))	Estimated Tank Surface Area (sq.ft.)	Calculated Volumetric Flow Rates (cu.ft./min.)
III. SOLVENT DEGREASING					
	1,1,1-Trichloroethane	C-1	225	20	4,500
	Perchloroethylene	B-2	225	20	4,500
	Methanol	C-3	110	20	2,200
	Mehyl Ethyl Ketone	C-3	110	20	2,200
	Trichloroethylene	C-1	225	20	4,500
	Methylene Chloride	C-1	225	20	4,500

** Sources: OSHA (1998a, 1998b)

Once the volumetric air flow rates are calculated (last column Table 2-3), they are multiplied by the corresponding air emissions concentration values in Table 2-2, as well as by a conversion factor to make the units of measure compatible. The resulting product is the daily mass emissions from each combination of process tank and emission control device. The mass emission rates are shown on Table 2-4. For those electrolytic processes with an OSHA alpha-numeric rating that does not appear to require ventilation (gold plating, acid copper plating, and chloride zinc plating), mass flow rates external to the plant are not expected to be significant, unless the tanks are aerated (which is stated in Table 2-4).

2.3.2.2. *Nonelectrolytic Processes (not including vapor degreasing)*

A number of nonelectrolytic processes take place in typical electroplating shops (e.g., chromate conversion, phosphate coating, alkaline cleaning, acid etching). These processes are similar to electrolytic processes in that they are aqueous, consisting of dissolved inorganic chemicals. Emissions from nonelectrolytic tanks do not relate to current density or cathode efficiency (which are obviously irrelevant terms for these processes); therefore, another method is necessary to determine the mass emission rates from these processes. Specifically, it was assumed that atmospheric emissions from each nonelectrolytic tank were the result of turbulence caused by mixing the tank contents with compressed air. It is recognized that mixing may be accomplished by mechanical mixers and/or recirculating pumps, or there may be no mixing at all (other than the insertion and removal of parts). If there is no tank turbulence, it is reasonable to assume that there are no emissions (other than water vapor), because little or no volatile materials are in the electroplating process tanks. For aerated tanks that do not appear to require external ventilation by OSHA (i.e., acid etch/bright dip processes), it is assumed that the emissions from the process tanks will exit the plant as fugitive emissions. The knowledgeable user of the model will be able to change the aeration characteristics of these nonelectrolytic process tanks, if he/she so desires, as discussed below.

In the electroplating industry section of AP-42 (Chapter 12.20.2), EPA presents the following equation for calculating the emissions resulting from mixing process tanks with air:

$$E = \frac{1.9\ \sigma}{R_b} \left[\frac{(1 - 2a + 9a^2)^{0.5} + (a - 1)}{(1 + 3a) - (1 - 2a + 9a^2)^{0.5}} \right]^{0.5}$$

Table 2-4. Daily Mass Emission Levels External to the Plant with Various Control Devices For Various Surface Coating Operations in the Electroplating Industry (Mg/day)*

Type of Plating Operation	Chemical of Concern	Uncontrolled Emissions	Polymer Balls	Fume Suppressants (@<28 dyne/cm)	Fume Suppressants + Polymer Balls	Packed Bed Scrubber	Packed Bed Scrubber + Fume Suppress.+ Polymer Balls	Chevron Mist Eliminator	Series Dual Chevron Mist Eliminator	Mesh Pad Mist Eliminator	Packed Bed Scrubber + Mist Eliminator	Composite Mesh Pad Mist Eliminator	Composite Mesh Pad + Fume Suppressant	Chevron Mist Eliminat.+ Fume Suppressant
I. ELECTROLYTIC PROCESSES														
Hard Chromium Plating Bath	Chromium (+6)	1.5e+06	6.4e+04	5.3e+03	1.7e+03	1.1e+04	6.1e+02	3.1e+04	1.4e+03	6.7e+03	2.0e+01	2.7e+03	1.7e+02	9.2e+02
	Sulfuric Acid	2.3e+04	1.0e+03	8.2e+01	2.7e+01	1.6e+02	9.5e+00	4.8e+02	2.1e+01	1.0e+02	3.2e-01	4.2e+01	2.6e+00	1.4e+01
Decorative Chromium Plat. Bath	Chromium (+6)	1.0e+06	4.4e+04	3.6e+03	1.2e+03	7.2e+03	4.2e+02	2.1e+04	9.3e+02	4.5e+03	1.4e+01	1.8e+03	1.1e+02	6.3e+02
	Sulfuric Acid	1.0e+04	4.3e+02	3.5e+01	1.1e+01	7.0e+01	4.1e+00	2.0e+02	9.1e+00	4.4e+01	1.4e-01	1.8e+01	1.1e+00	6.1e+00
Trivalent Chromium Plating Bath	Chromium (+3)	2.5e+03	1.0e+02	8.7e+00	2.8e+00	1.7e+01	1.0e+00	5.0e+01	2.2e+00	1.1e+01	3.3e-02	4.4e+00	2.7e-01	1.5e+00
Nickel Plating Bath	Nickel	2.0e+04	8.3e+02	6.9e+01	2.2e+01	1.4e+02	8.0e+00	4.0e+02	1.8e+01	8.7e+01	2.6e-01	3.5e+01	2.2e+00	1.2e+01
Anodizing, Sulfuric Acid	Sulfuric Acid	7.4e+03	3.1e+02	2.6e+01	8.5e+00	5.2e+01	3.0e+00	1.5e+02	6.7e+00	3.3e+01	1.0e-01	1.3e+01	8.2e-01	4.5e+00
Anodizing, Chromic Acid	Chromic Acid	1.5e+05	6.3e+03	5.2e+02	1.7e+02	1.0e+03	6.0e+01	3.0e+03	1.3e+02	6.6e+02	2.0e+00	2.6e+02	1.6e+01	9.0e+01
Gold Plating Bath	Gold	No significant emissions from Gold Plating, unless aerated and externally ventilated.												
	Cyanide (CN)													
Copper Strike Bath	Copper	2.0e+03	8.7e+01	7.2e+00	2.3e+00	1.4e+01	8.3e-01	4.2e+01	1.9e+00	9.1e+00	2.8e-02	3.6e+00	2.3e-01	1.2e+00
	Cyanide (CN)	3.0e+03	1.3e+02	1.0e+01	3.4e+00	2.1e+01	1.2e+00	6.0e+01	2.7e+00	1.3e+01	4.0e-02	5.2e+00	3.3e-01	1.8e+00
Copper (Cyanide) Plating Bath	Copper	2.8e+03	1.2e+02	9.9e+00	3.2e+00	2.0e+01	1.1e+00	5.7e+01	2.5e+00	1.2e+01	3.8e-02	5.0e+00	3.1e-01	1.7e+00
	Cyanide (CN)	4.2e+03	1.8e+02	1.5e+01	4.8e+00	3.0e+01	1.7e+00	8.6e+01	3.8e+00	1.9e+01	5.7e-02	7.5e+00	4.7e-01	2.6e+00
Copper (Acid) Plating Bath	Copper	No significant emissions from Acid Copper Plating unless aerated and externally ventilated.												
	Sulfuric Acid													
Cadmium Plating Bath	Cadmium	2.0e+03	8.6e+01	7.1e+00	2.3e+00	1.4e+01	8.2e-01	4.1e+01	1.8e+00	9.0e+00	2.7e-02	3.6e+00	2.2e-01	1.2e+00
	Cyanide (CN)	2.5e+03	1.1e+02	8.9e+00	2.9e+00	1.8e+01	1.0e+00	5.1e+01	2.3e+00	1.1e+01	3.4e-02	4.5e+00	2.8e-01	1.5e+00
Zinc (Cyanide) Plating Bath	Zinc	8.2e+03	3.5e+02	2.9e+01	9.4e+00	5.8e+01	3.3e+00	1.7e+02	7.4e+00	3.6e+01	1.1e-01	1.5e+01	9.1e-01	5.0e+00
	Cyanide (CN)	2.3e+04	1.0e+03	8.2e+01	2.7e+01	1.6e+02	9.5e+00	4.8e+02	2.1e+01	1.0e+02	3.2e-01	4.2e+01	2.6e+00	1.4e+01
Zinc (Chloride) Plating Bath	Zinc	No significant emissions from Zinc Chloride Plating unless aerated and externally ventilated.												
Zinc (Alk. Non-Cyan.) Plating Bath	Zinc	1.4e+03	6.0e+01	4.9e+00	1.6e+00	9.9e+00	5.7e-01	2.9e+01	1.3e+00	6.2e+00	1.9e-02	2.5e+00	1.6e-01	8.6e-01
	Sodium Hydroxide	1.1e+04	4.6e+02	3.8e+01	1.2e+01	7.6e+01	4.4e+00	2.2e+02	9.8e+00	4.8e+01	1.5e-01	1.9e+01	1.2e+00	6.6e+00
Silver Strike Bath	Silver	1.6e+02	6.9e+00	5.7e-01	1.9e-01	1.1e+00	6.6e-02	3.3e+00	1.5e-01	7.2e-01	2.2e-03	2.9e-01	1.8e-02	9.9e-02
	Cyanide (CN)	1.9e+03	8.0e+01	6.6e+00	2.2e+00	1.3e+01	7.7e-01	3.8e+01	1.7e+00	8.4e+00	2.5e-02	3.4e+00	2.1e-01	1.2e+00
Silver Plating Bath	Silver	9.4e+03	4.0e+02	3.3e+01	1.1e+01	6.6e+01	3.8e+00	1.9e+02	8.5e+00	4.2e+01	1.3e-01	1.7e+01	1.0e+00	5.7e+00
	Cyanide (CN)	9.4e+03	4.0e+02	3.3e+01	1.1e+01	6.6e+01	3.8e+00	1.9e+02	8.5e+00	4.2e+01	1.3e-01	1.7e+01	1.0e+00	5.7e+00
Electrocleaning	Sod. Hydroxide	3.0e+04	1.3e+03	1.1e+02	3.4e+01	2.1e+02	1.2e+01	6.1e+02	2.7e+01	1.3e+02	4.0e-01	5.3e+01	3.3e+00	1.8e+01
	Sod. Phosphate	5.6e+03	2.4e+02	2.0e+01	6.4e+00	4.0e+01	2.3e+00	1.1e+02	5.1e+00	2.5e+01	7.6e-02	1.0e+01	6.2e-01	3.4e+00
	Sod. Metasilicate	9.4e+03	4.0e+02	3.3e+01	1.1e+01	6.6e+01	3.8e+00	1.9e+02	8.5e+00	4.2e+01	1.3e-01	1.7e+01	1.0e+00	5.7e+00

Table 2-4. Daily Mass Emission Levels External to the Plant with Various Control Devices For Various Surface Coating Operations in the Electroplating Industry (Mg/day)* (continued)

Type of Plating Operation	Chemical of Concern	Uncontrolled Emissions	Polymer Balls	Fume Suppressants (@<28 dyne/cm)	Fume Suppressants + Polymer Balls	Packed Bed Scrubber	Packed Bed Scrubber + Fume Suppress.+ Polymer Balls	Chevron Mist Eliminator	Series Dual Chevron Mist Eliminator	Mesh Pad Mist Eliminator	Packed Bed Scrubber + Mist Eliminator	Composite Mesh Pad Mist Eliminator	Composite Mesh Pad + Fume Suppressant	Chevron Mist Eliminat.+ Fume Suppressant
II. NON-ELECTROLYTIC PROCESSES														
Alkaline Cleaning Bath (typical)	Sod. Hydroxide	4.3e+04	1.8e+03	1.5e+02	4.9e+01	3.0e+02	1.7e+01	8.7e+02	3.9e+01	1.9e+02	5.8e-01	7.6e+01	4.7e+00	2.6e+01
	Sod. Phosphate	8.0e+03	3.4e+02	2.8e+01	9.2e+00	5.6e+01	3.3e+00	1.6e+02	7.3e+00	3.6e+01	1.1e-01	1.4e+01	8.9e-01	4.9e+00
	Sod. Metasilicate	1.3e+04	5.7e+02	4.7e+01	1.5e+01	9.4e+01	5.4e+00	2.7e+02	1.2e+01	5.9e+01	1.8e-01	2.4e+01	1.5e+00	8.1e+00
Acid Etch/Desmut Bath (typical)***	Sulfuric Acid	1.7e+05	7.3e+03	6.0e+02	2.0e+02	Bath not vented, hence no applicable air pollution control equipment								
Acid Desmutt/Deoxidize***	Nitric Acid	3.4e+05	1.5e+04	1.2e+03	3.9e+02	Bath not vented, hence no applicable air pollution control equipment								
	Sulfuric Acid	1.0e+05	4.4e+03	3.6e+02	1.2e+02									
Phosphate Coating Bath	Phosphoric Acid	3.4e+04	1.5e+03	1.2e+02	3.9e+01	2.4e+02	1.4e+01	7.0e+02	3.1e+01	1.5e+02	4.6e-01	6.1e+01	3.8e+00	2.1e+01
Nickel Plating Bath (Electroless)	Nickel	6.9e+03	2.9e+02	2.4e+01	7.9e+00	4.8e+01	2.8e+00	1.4e+02	6.2e+00	3.0e+01	9.3e-02	1.2e+01	7.6e-01	4.2e+00
	Sod. Hypophosphite	1.4e+04	5.8e+02	4.8e+01	1.6e+01	9.6e+01	5.6e+00	2.8e+02	1.2e+01	6.1e+01	1.9e-01	2.4e+01	1.5e+00	8.4e+00
Anodizing Sealer	Nickel	1.4e+03	5.8e+01	4.8e+00	1.6e+00	9.6e+00	5.6e-01	2.8e+01	1.2e+00	6.1e+00	1.9e-02	2.4e+00	1.5e-01	8.4e-01
	Chromium (+6)	1.4e+04	5.8e+02	4.8e+01	1.6e+01	9.6e+01	5.6e+00	2.8e+02	1.2e+01	6.1e+01	1.9e-01	2.4e+01	1.5e+00	8.4e+00
Chromate Conversion Bath	Chromium (+6)	3.1e+04	1.3e+03	1.1e+02	3.5e+01	2.2e+02	1.3e+01	6.3e+02	2.8e+01	1.4e+02	4.2e-01	5.5e+01	3.4e+00	1.9e+01
Hexavalent Chromium Passivation	Chromium (+6)	2.1e+03	8.8e+01	7.2e+00	2.4e+00	1.4e+01	8.4e-01	4.2e+01	1.9e+00	9.1e+00	2.8e-02	3.7e+00	2.3e-01	1.3e+00
Acid Etch (for Zinc Plating)***	Hydrochloric Acid	6.9e+04	2.9e+03	2.4e+02	7.9e+01	Bath not vented, hence no applicable air pollution control equipment								
III. SOLVENT DEGREASING**														
	1,1,1-Trichloroethane	3.3e+07	n/a	n/a	n/a	n/a	n/a	n/a	n/a	n/a	n/a	n/a	n/a	n/a
	Perchloroethylene	9.5e+06	n/a	n/a	n/a	n/a	n/a	n/a	n/a	n/a	n/a	n/a	n/a	n/a
	Methanol	1.3e+07	n/a	n/a	n/a	n/a	n/a	n/a	n/a	n/a	n/a	n/a	n/a	n/a
	Methyl Ethyl Ketone	2.3e+07	n/a	n/a	n/a	n/a	n/a	n/a	n/a	n/a	n/a	n/a	n/a	n/a
	Trichloroethylene	1.9e+07	n/a	n/a	n/a	n/a	n/a	n/a	n/a	n/a	n/a	n/a	n/a	n/a
	Methylene Chloride	6.9e+07	n/a	n/a	n/a	n/a	n/a	n/a	n/a	n/a	n/a	n/a	n/a	n/a

* Based on 24 hours of continuous operation per day at the calculated volumetric flow rates (cu.ft./min) shown in Table 2-3. Where different bath components require different ventilation rates, the higher ventilation rate is used. To convert mg/day to pounds/day, multiply mg/day by 2.203E-6. For non-electrolytic tanks, uncontrolled emissions are calculated using AP-42 section 12.20 equation 4 for aerated tank emissions. This equation calculates mass of liquid mist emitted per unit volume of aeration air, based on surface tension and bubble size. It is assumed that bubbles are a diameter of 0.1 inches, and that surface tension is 70 dyne/cm, except for alkaline cleaners where it is assumed to be 40 dyne/cm. It is further assumed that there are 10 CFM of air used per sq.ft. of tank surface. Controlled emissions from non-electrolytic tanks are in the same ratio to uncontrolled emissions as for electrolytic tanks.

** Emissions for 1,1,1-trichloroethane vapor degreasing (in mg/day) are based on the AP-42 emissions factor of 0.15 lb/hr/sq.ft, for the surface area (sq.ft) given in Table 2-3. Emissions for other solvents are equal to 1,1,1-trichloroethane emissions times the ratio of the solvent vapor pressures and the solvent molecular weights to the vapor pressure and molecular weights of 1,1,1-Trichloroethane.

*** Emissions from Acid Etching/Desmutting/Bright Dip processes do not appear to require external ventilation under OSHA regulations. Nevertheless, the mass emission rate is shown since emissions will be in the form of fugitive releases caused by assumed aeration. Because there is no external ventilation, emission controls can consist of only polymer balls and/or fume suppressants.

where:

E = Emission factor in grains/cubic foot of aeration air;

F = Surface tension of bath, in pounds force per foot (lb_f/ft);

R_b = Average bubble radius, in inches;

a = $0.072\ R_b^2 / F$

This equation calculates the mass of tank liquids emitted per volume of aeration air. The calculated values are a function of the size (i.e., radius) of the bubbles being generated and the surface tension of the tank contents. The calculated emissions are sensitive to bubble size in the range of about 1.3 to 13 millimeters (mm) (0.05 to 0.5 inch) radius, increasing with bubble size by about 50 percent within that range. Emissions also increase by about 100 percent with an increase in surface tension from 20 to 80 dynes per centimeter, which are the anticipated realistic extremes of surface tension based on data in the CSI report (U.S. EPA, 1996). As MFFRST defaults, it is assumed that the bubble radius is 0.05 inch in all nonelectrolytic tanks, and that the surface tension is 40 dynes per centimeter in alkaline cleaning tanks and 70 dynes per centimeter in all other nonelectrolytic tanks. (Alkaline cleaning tanks contain surfactants, which lower surface tension.) The knowledgeable user of the model will be able to adjust the values of both the surface tension and the bubble size.

The output of the AP-42 emission equations, as noted above, is in mass of bath chemical contents per unit volume of aeration air. To calculate mass emission rate (i.e., for a unit of time), the volume of aeration air used must be known. As an MFFRST default, it is assumed that the volume of aeration air is 3.0 m^3/min-ft^2 (10 ft^3/min-ft^2) of tank surface area. (The tank surface areas are those shown in Table 2-3.) The knowledgeable user of the model will be able to adjust both the aeration volume, as well as the tank surface area; otherwise, the default data will be used.

Further, because the output of the AP-42 equations is in mass of total bath chemical contents, *including water*, it is necessary to adjust the output for the fraction of tank contents that represents the constituents of concern. This was accomplished using the bath concentrations shown in the third column of Table 2-1.

After consideration of the items discussed above, the mass emission rate for uncontrolled emissions for nonelectrolytic process tanks was calculated and included in Table 2-4. To calculate the controlled emission rates using the air pollution control methods listed on the top of Table 2-4, the uncontrolled rates for nonelectrolytic tanks were multiplied by the ratio of the controlled emission rates for hard chromium electroplating to uncontrolled emission rates for hard chromium electroplating. The emissions concentrations values for nonelectrolytic tanks shown in Table 2-2

are calculated by dividing the mass emission rates in Table 2-4 by the appropriate volumetric exhaust flow rates shown in the last column of Table 2-3 (and applying proper correction factors to make the units of measure compatible).

2.3.2.3. *Vapor Degreasing*

Air emissions may also result from other processes that are part of metal plating shops. Solvent degreasing may be a significant emission point in a metal finishing shop and it is the only nonaqueous process considered in MFFRST. Before parts can be surface coated (e.g., plated, anodized, chromium converted, or phosphatized), all residual oils/greases must be removed or the coatings will not form and/or adhere. Two degreasing methods are routinely employed: solvent degreasing and alkaline cleaning (including electrocleaning). They are frequently employed in series, or sometimes only alkaline cleaning is used. Alkaline cleaning is an aqueous-based process, and is discussed in Section 2.2.

For high production shops, solvent degreasing usually means vapor degreasing. In vapor degreasing, relatively cold parts are immersed in the warm vapors above boiling organic solvents. Historically, these solvents have been chlorinated solvents. The vapors condense on the parts, dissolving any petroleum residues; the condensation then drips back into the bulk organic liquid. When the parts are removed from the degreaser, they are warm and the solvent evaporates rapidly, leaving a dry part ready for the next process step. Almost all modern vapor degreasers incorporate cold water and/or refrigerant coils near the top edges of the tank, so that the rising vapor blanket will condense on these surfaces and drip back into the bulk solvent, thus minimizing the emission of solvent vapors.

In MFFRST, uncontrolled emissions of solvents are estimated by assuming that the emission rate of a given solvent is directly proportional to the ratio of its vapor pressure to the vapor pressure of 1,1,1-trichloroethane (TCA) multiplied by a default emission rate for TCA. TCA has a specific gravity of 1.34, which is why Table 2-1 shows the bath concentration at 1,340 grams per liter (Noyes, 1991). It also has a vapor pressure of 60 millimeters of mercury (mm Hg) at 7°C (45°F) (the assumed temperature of the condensation coils), which would correspond to an equilibrium concentration of 4.65×10^5 mg/m^3 (i.e., if there was zero ventilation) (Noyes, 1991). The mass emission value shown in Table 2-4 is based on AP-42 (Section 4.6.2: U.S. EPA, 1995) rather than on non-ventilated equilibrium TCA concentrations. AP-42 gives an emission factor rating of "C" to its estimate of 0.15 pounds/hour-square foot of emissions (U.S. EPA, 1995). Multiplying this value by the estimated typical tank size shown in Table 2-3 (and making the necessary conversion for units of measure) yields the mass emission rate shown in Table 2-4 of 3.3×10^7 mg/day. This

emission rate corresponds to a ventilation system inlet concentration of 177 mg/m^3 (the uncontrolled emission rate shown in Table 2-2) in the 4,500 ft^3/min ventilation flow rate shown in Table 2-3. Again, the knowledgeable user of the anticipated model may substitute different values for tank surface area, volumetric flow rates, or mass emission rate.

The user has the option of choosing other solvents used at or about room temperature. The emission rates from these solvent operations are assumed to be related to the TCA emission rate by the ratio of their vapor pressures (Noyes, 1991) at the temperature of use (i.e., room temperature for the other solvents). The user may choose from the following solvents:

Solvent	Vapor Pressure (mm Hg)	Molecular Weight (g/mole)
Tetrachloroethylene (perchloroethylene or PCE)	14	166
Methanol	96	32
Methyl ethyl ketone (MEK)	78	72
Trichloroethylene (TCE)	58	131
Methylene Chloride	350	85

Another approach that the model user could employ for estimating emission rates for degreasing solvents is to insert the amount of solvent purchased (per unit time) less the amount of spent solvent disposed of as solid waste or recycled to others. This net amount is the volume that was volatilized to the atmosphere (unless solvent vapors are captured in activated carbon that is recycled off site or are destroyed by fume incineration).

2.3.3. Controls for Fugitive Emissions Into the Indoor Workplace

From aqueous plating line operations, atmospheric emissions consist of acidic gases and aerosol mists, alkaline aerosol mists, and metal-containing aerosol mists. There are also emissions of water vapor/steam from all aqueous tanks, especially those that are heated. However, in MFFRST, emissions of water vapor/steam are not considered to pose an inhalation risk. From solvent degreasing, emissions consist primarily of gaseous solvent vapors.

To minimize fugitive emissions into the workplace, most plating operations are ventilated using exhaust systems. Typically, cold rinsewater tanks, however, are not ventilated because there

are rarely sufficient concentrations of acids/alkalis/metals to cause an occupational risk. Exhaust systems consist of some sort of system inlet at the tank(s) being ventilated (e.g., lip vent on the side(s) of tank, slotted hood at rear of tank, overhead hood), a ducting system to convey the exhausted fumes away from the process tanks, a fan to provide the necessary power to move the ventilated air, and a stack to discharge the ventilated air to the ambient atmosphere outside the plating shop. In some exhaust systems, air pollution control devices are positioned directly before or after the fan to remove chemicals from the exhaust stream so that they are not emitted to the environment.

Properly designed exhaust systems do an excellent job of removing harmful fumes from the workers' environment. However, some amount of fumes will always escape the exhaust system due to intermittent breezes in the shop, heavy work loads, excessive turbulence in the process tanks, excessive tank temperatures, etc. In addition, it is not unusual for workers to occasionally position themselves, intermittently, between the surface of process tanks and exhaust system inlets, thus exposing the workers to the same concentration of fumes that are going into the exhaust system.

To minimize worker exposure caused by scenarios discussed in the preceding paragraph, two general types of controls are used for aqueous process tanks:

- Floating polymer (i.e., plastic) balls, and
- Mist/fume suppressant additives.

These two controls can be used separately or in combination. As noted in Section 2.3.2, emissions from uncontrolled tanks, as well as tanks with floating balls, mist suppressants, and a combination of both technologies, as presented in Tables 2-2 and 2-4, are derived from data presented in the CSI report (U.S. EPA, 1996) in combination with AP-42 (U.S. EPA, 1995) extrapolation methodology.

Polymer balls, when they cover almost all of the tank's surface, intercept aerosol mists; the aerosols contact the balls and return to the tank before they are emitted to the atmosphere. Although polymer balls is a much-used approach, it has drawbacks. When inserting work into a tank, the balls are likely to be temporarily submerged and may rapidly pop back to the surface, causing splashing and/or bouncing out of the process tanks (causing housekeeping and wastewater generation problems).

Mist suppressants are basically surface active agents (i.e., surfactants) that reduce the surface tension of aqueous formulations in the process tanks and, in some cases, produce a layer of foam. Foam is typically be produced on aerated tanks or in tanks producing off-gasses, such as

electroplating tanks (which produce hydrogen and oxygen at the electrodes). Reducing surface tension decreases the size of the bubbles that form aerosols. Thus, bubbling will not be as turbulent, and less aerosols will be formed. In addition, a foam blanket will act as impingement sites for aerosols (similar to the polymer balls, but much more effective), reducing aerosol emission.

For solvent degreasers, the most effective method of reducing worker exposure to fumes not captured by the exhaust system is to provide a cover over the degreaser operation (if possible for the type of degreasing employed). For hot degreasers (i.e., vapor degreasers), condensing coils are provided in almost all cases. These coils, through which either cold water and/or refrigerants flow, are positioned between the top of the liquid solvent and the exhaust system intake. Solvent fumes condense when they reach the level of the condensing coils and fall back into the liquid solvent. Emission estimates for solvent degreasers are based on AP-42 (U.S. EPA, 1995) estimates, as described in Section 2.3.2.3.

2.3.4. Controls for Atmospheric Emissions

Controlling emissions of gases, aerosols, and solid particulates is accomplished with air pollution control devices (APCDs). The APCD is located in the ductwork, typically directly upstream or directly downstream of the exhaust system fan. Depending upon the State and local regulations, APCDs may be necessary for only a few or almost all nonrinse process tanks. Typically, APCDs are required for chromium plating baths because such baths are hot and effervescent, and because Cr^{+6} is highly toxic. However, it is not unusual for APCDs to be used to control emissions from other metal plating baths, acid baths, or alkaline cleaner baths.

For emissions from aqueous process tanks, the APCD is usually a wet scrubber and/or a mist eliminator. At the risk of oversimplifying, a wet scrubber is typically a relatively large cross section vessel that is placed in the exhaust air flow. The internal portions of the scrubber are typically a variety of plastic or ceramic geometric shapes (usually less than 2 inches effective diameter each), called “packing,” through which the exhaust air flows upward (but may flow horizontally). At the same time that the air flows through the packing, water is sprayed down through the packing and drained at the bottom of the scrubber. The intimate contact between the water and air transfers the contaminants from the airstream to the water. Typically, scrubber water is partially recycled back to the scrubber water inlet and/or reused for process rinsing purposes.

In the case of aerosols (such as from chromium plating baths), it is not always necessary to use a wet scrubber because a mist eliminator may provide similar efficiency. A mist eliminator typically consists of relatively tightly woven or packed plastic fiber pads (although, it may be the

same packing materials used in a wet scrubber, or may be parallel chevron-shaped plates). The aerosol particles impact the pad fibers, coalesce, and drain out of the bottom of the mist eliminator (possibly back into the tank being ventilated). Properly designed scrubber and mist eliminator removal efficiencies are usually in excess of 99 percent (U.S. EPA, 1995).

For solvent degreasers, APCDs are typically used only when the solvent is heated (e.g., a vapor degreaser). As with aqueous process baths, not all State and local regulations require APCDs for hot solvent degreasing (other than covers and condensing coils discussed in Section 3.2.4). However, when APCDs are required, they are typically activated carbon recovery systems or fume incinerators. In activated carbon systems, the exhaust gases pass through a bed of granular activated carbon on which the organic solvents are adsorbed. In the more sophisticated activated carbon systems, the solvents may be recovered by heating the spent carbon bed (steam or electric heating), which drives off the adsorbed solvents as a concentrated vapor, which is then condensed and reprocessed/reused. In the less sophisticated systems, the spent carbon bed is merely replaced when it is exhausted. The spent carbon may be taken to an off-site solvent recovery firm or incinerated.

Fume incinerators are heated vessels (typically using natural gas), through which the exhaust vapors pass. The typical temperature in such vessels is over 815°C (1,500°F), which ensures that even chlorinated solvents will decompose at greater than 99.99 percent efficiency. Catalytic fume incinerators are similar, except that the heated vessel contains a catalyst-impregnated ceramic material through which the vapors pass. The catalyst accomplishes 99.99 percent efficiency at much lower temperatures, typically less than 480°C (900°F). Because a combustion product of chlorinated solvents is the toxic and corrosive hydrochloric acid, fume incinerators are rarely used for chlorinated solvents.

Atmospheric emissions estimates, as presented in Section 2.3.2 and Tables 2-2 and 2-4, are derived from data presented in the CSI report (U.S. EPA, 1996) in combination with AP-42 (U.S. EPA, 1995).

2.4. REFERENCES

American Electroplaters' Society, Inc. 1969a. Cyanide Copper Plating. Orlando, Florida.

American Electroplaters' Society, Inc. 1969b. Sulfuric Acid Anodizing of Aluminum and Its Alloys. Orlando, Florida.

American Electroplaters' Society, Inc. 1970a. Bright Acid Sulfate Copper Plating. Orlando, Florida.

American Electroplaters' Society, Inc. 1970b. Chromate Conversion Coatings. Orlando, Florida.

American Electroplaters' Society, Inc. 1972a. Decorative Chromium Plating. Orlando, Florida.

American Electroplaters' Society, Inc. 1972b. Electroless Plating of Metals. Orlando, Florida.

American Electroplaters' Society, Inc. 1973a. Chromic Acid Anodizing of Aluminum. Orlando, Florida.

American Electroplaters' Society, Inc. 1973b. Practical Nickel Plating. Orlando, Florida.

American Electroplaters' Society, Inc. 1974. Theory and Practice of Phosphating. Orlando, Florida.

American Electroplaters' Society, Inc. 1975a. Gold Plating. Orlando, Florida.

American Electroplaters' Society, Inc. 1975b. Hard Chromium Plating. Orlando, Florida.

American Electroplaters' Society, Inc. Undated. Zinc and Cadmium Plating. Orlando, Florida.

Dupont Industrial Chemicals Publications. 1973. Decorative Chromium Plating. Plating Product Bulletin No. 50.

Dupont Industrial Chemicals Publications. 1975. Industrial (Hard) Chromium Plating. Plating Product Bulletin No. 60.

Dupont Industrial Chemicals Publications. 1976. Cyanide Zinc Plating. Plating Product Bulletin No. 36.

Dupont Industrial Chemicals Publications. Undated. Cyanide Copper Plating. Plating Product Bulletin No. 41.

Electroplating Engineering Handbook. 1984. 4th Ed., Reprinted in 1998 by Chapman & Hall.

Metal Finishing 99 Guidebook and Directory Issue. 1999. Published as the 13th issue of Metal Finishing Magazine. Volume 97, Number 1, January 1999.

Noyes Data Corp. 1991. Industrial Solvents Handbook, 4th Ed..

OSHA. 1998a. 29 CFR 1910.94(d), Subpart G, Occupational Health & Environmental Control. (29CFR1910.94(d) was replaced on 23 Mar 99 [64FR9236] by 29CFR1910.124-.126)

OSHA. 1998b. 29 CFR 1910.94(d)(2)(v)&(vii), Subpart G, Occupational Health & Environmental Control. (29CFR1910.94(d) was replaced on 23 Mar 99 [64FR9236] by 29CFR1910.124.126)

OSHA. 1998c. 29 CFR 1910.94(d)(4)(i), (ii), and (iii)(a)(2), Subpart G, Occupational Health & Environmental Control. (29CFR1910.94(d) was replaced on 23 Mar 99 [64FR9236] by 29CFR1910.124-.126)

U.S. EPA. 1995. Compilation of Air Pollutant Emission Factors. AP-42, 5th Ed. Office of Air Quality Planning and Standards.

U.S. EPA. 1996. Hard Chrome Pollution Prevention Demonstration Project: Interim Report. U.S. EPA Common Sense Initiative (CSI), Metal Finishing Subcommittee.

U.S. EPA. 1998. Characterizing Risk at Metal Finishing Facilities: Meeting the Needs of All Stakeholders. Office of Research and Development. EPA/600/R-97/111.

3.0 MODELING THE FATE AND TRANSPORT OF CONTAMINANTS FROM SOURCE TO RECEPTOR

3.1. INTRODUCTION

This chapter describes fate and transport modeling procedures used by MFFRST. These procedures enable the model user to estimate human exposures to chemicals emitted from metal finishing facilities and to determine the adverse health effects that may result from long-term exposures. Included is a discussion of the approach used to estimate the dispersion of air emissions from a facility to the surrounding residential receptors. Also presented are the techniques used to estimate occupational exposures to workers in metal finishing facilities.

The procedures used by MFFRST are established methods used by EPA and other organizations to provide screening-level estimates of air concentrations that might result from metal finishing operations. Air dispersion models are the primary tools used to simulate the chemical and physical processes in the atmosphere that affect the movement of pollutants from the source to the receptor (Turner, 1994). MFFRST's fate and transport modeling procedures consider source types, chemicals, stack characteristics, local terrain, meteorology, and other factors that may influence the concentration of chemicals in air. Specifically, MFFRST uses the SCREEN3 model for residential scenarios and a "box model" for occupational exposure estimation. This section describes how these models were selected, tailored, and applied for MFFRST.

This section also introduces the user to the types of information that will be needed to produce a site-specific estimate of air concentrations. In particular, information about the specific source and the local terrain and meteorology are required for application of SCREEN3. Information on the workplace dimensions and ventilation system are required for modeling indoor air concentrations. If the user does not input any site-specific values, the system provides default values for these parameters. It should be noted that there are uncertainties in estimating air dispersion from any given facility and that the estimated air concentrations produced by MFFRST are generally conservative and protective of human health.

3.2. RESIDENTIAL FATE AND TRANSPORT MODELING

This section describes the approach used to develop the fate/transport modeling system for residential (outdoor) air exposures. For this application, EPA’s SCREEN3 model was selected as the air dispersion model to be used in estimating air concentrations for MFFRST. Described in this section are: a general overview of the principles of ambient air dispersion modeling, the criteria used

to select an air dispersion model for MFFRST, other types of models considered, input parameters needed to perform air dispersion modeling, and development of default values for various input parameters and related information.

Of the three media (i.e., air, water, and soil) that can be impacted by releases from metal finishing operations, air emissions are believed to account for much of the potential risks to human health in the residential scenario. Therefore, in this version of MFFRST, only fate and transport modeling of airborne chemicals is performed to assist in estimating inhalation exposures.

3.2.1. Use of Air Dispersion Models

Air quality models have become the primary analytical tool in assessing the impact of point sources on air quality. A point source is an emission which emanates from a specific point, such as a smokestack or vent. The modeling methods used are considered to be applicable for assessing impacts of a source from the facility fence line out to a 50 km radius of the source to be modeled (U.S. EPA, 1992a). These models use mathematical equations to simulate the rise of a plume from a source and the subsequent horizontal and vertical dispersion affected by wind, temperatures, terrain, and other factors (Turner, 1994). Figure 3-1 displays a generic diagram of the major components of an air dispersion model. Gaussian models are the most widely used techniques for estimating the impact of nonreactive pollutants (U.S. EPA, 1987). These models use the Gaussian distribution to describe crosswind and vertical distributions that are the result of wind and other factors that produce mixing (Turner, 1994). According to Turner (1994), the basic Gaussian dispersion equation simulates the 3-dimensional behavior of pollutants in the atmosphere:

$$X = Q/(2\pi\ u_s\sigma_y\sigma_z)\exp\left[-1/2((z_r - h_e)/\sigma_z)^2\right]$$

$$+\exp\left[-1/2((2_r + h_e)/\sigma_z)^2\right]$$

$$+\sum_{N=1}^{k}\left[\exp -1/2((z_r - h_e - 2Nz_i)/\sigma_z)^2\right]$$

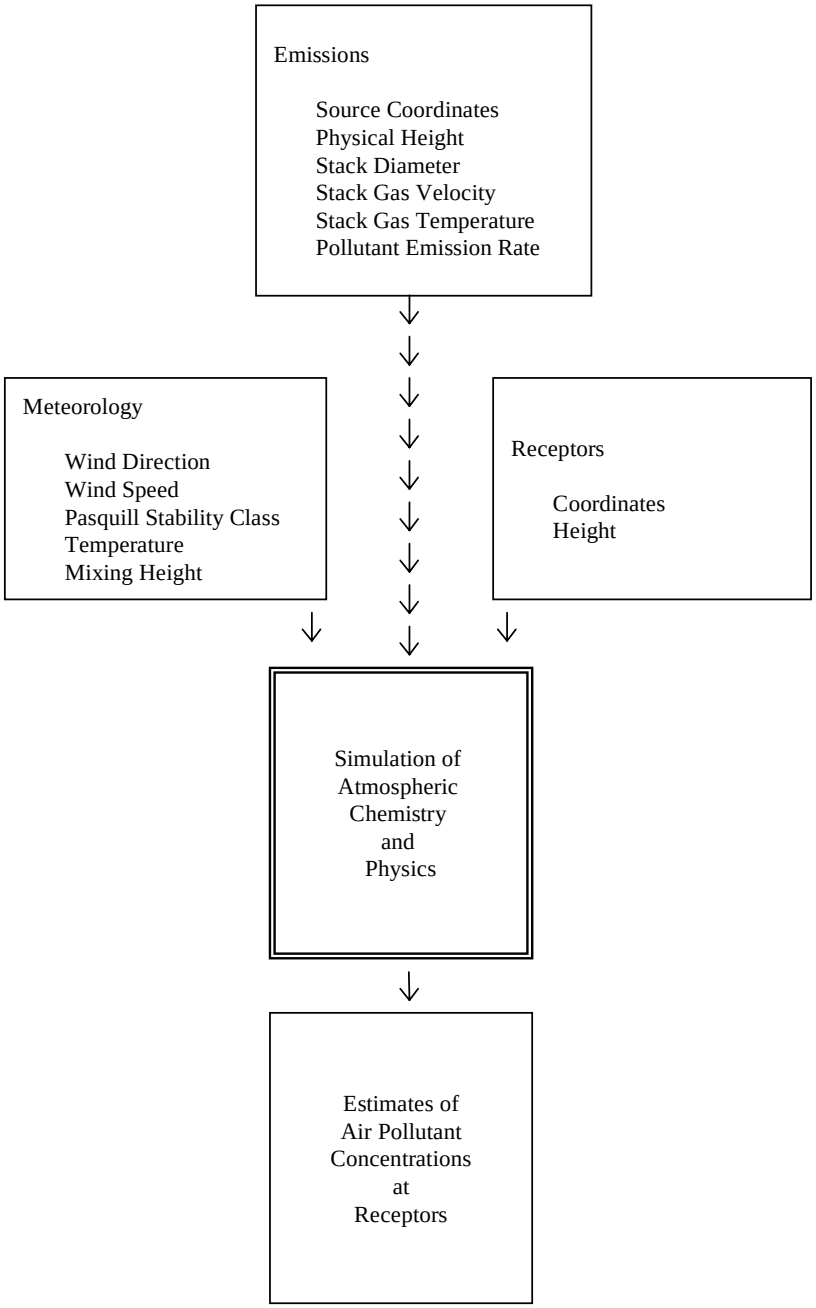

Figure 3-1. Major Components of Air Dispersion Models

Source: Turner, 1994.

$$+\exp\left[-1/2((z_r + h_e - 2Nz_i)/\sigma_z)^2\right]$$

$$+\exp\left[-1/2((Z_r - h_e) + 2Nz_i)\sigma_z)^2\right]$$

$$+\exp\left[-1/2((Z_r + h_e) + 2Nz_i)\sigma_z)^2\right]$$

where:

X = concentration (g/m^3);
Q = emission rate (g/s);
B = 3.141593;
u_s = stack height wind speed (m/s);
F_y = lateral dispersion parameter (m);
F_z = vertical dispersion parameter (m);
z_r = receptor height above ground (m);
h_e = plume centerline height (m);
z_i = mixing height (m);
k = summation limit for multiple reflections of plume off of the ground and elevated inversion, usually #4.

The fate and transport modeling system depends on the user to provide data which describe the local situation so the model can predict likely resulting concentrations at a residence some distance from the facility. It is necessary to have quantitative information about the sources to conduct air dispersion modeling. Screening models (described below) need less information than more sophisticated models. The main input parameters include:

- Source emission rate;
- Stack height;
- Inside stack diameter;
- Exhaust gas exit velocity;
- Exhaust gas exit temperature;
- Dimensions of structures near each source;
- Exact release and fence line location;

- Exact location of receptors for determining worst-case impacts;
- Land use near the modeled facility;
- Terrain features near the facility;
- Distance to receptor; and
- Receptor height.

3.2.2. Requirements for Air Dispersion Predictions and Model Selection Criteria

Air dispersion models are available for a variety of situations, including those that predict large scale transport and transformation of pollutants from sources to receptors hundreds of miles away (U.S. EPA, 1987; U.S. EPA, 1992a). This effort examined models that might be appropriate for this application and strengths and weaknesses of candidate models were assessed. The model that most accurately estimates concentrations in the area of interest is always sought. Consistency in the application of dispersion modeling in different situations was seen as an important feature, to ensure that MFFRST results can be compared from facility to facility. The approach for air dispersion modeling in residential scenarios was to select an "off the shelf" model to take advantage of the state of the science. Selection considered many factors in order to allow MFFRST to meet the needs of a variety of users:

1. The model must be in the public domain and may not be copyright protected.
2. The model must have undergone substantial critical review and field evaluations.
3. The model must have been developed by, or supported by, governmental agencies and thus updated versions can be expected in the future.
4. The model is in use by both government and private concerns.
5. The model must possess excellent interface capabilities and be easily modified to produce a user-friendly program for the metal finishing industry.
6. The model is relatively easy to use and can provide reliable estimates with appropriate input data.

Two broad levels of models are available. The first level consists of relatively simple estimation techniques that provide conservative estimates of the impact of a specific source. These are often called screening models. If a screening technique indicates that the concentration contributed by the source exceeds a level of concern at the receptor, then, depending on the needs of the user, a more rigorous approach should be used. On the contrary, because of the conservative nature of a screening model, if predicted concentrations and resulting risks are low there is probably no cause for concern (U.S. EPA, 1992a). The more sophisticated models provide a more detailed treatment of physical and chemical atmospheric processes, and require more detailed and precise

input data. Therefore, these models are expected to provide a more refined and more accurate estimate of concentrations at a receptor. However, such models are often extremely complex and can require significant amounts of site-specific data to produce reliable site-specific results. In many instances, experienced modelers are needed to operate these models because a model applied improperly, or with inappropriately chosen data, can lead to misjudgments in assessing source impacts (U.S. EPA, 1987).

3.2.3. Candidate Models

Two major candidates were evaluated for use in MFFRST, SCREEN3 and ISC3 (Industrial Source Complex Model). Based on the criteria above, and insight into the need for a model that would be user-friendly, SCREEN3 was selected as the air dispersion model to be used in MFFRST for residential exposure scenarios.

SCREEN3 is an EPA screening level system that uses a Gaussian plume model, incorporating source-related factors and meteorological conditions to estimate the ambient pollutant concentration (U.S. EPA, 1995). SCREEN3 performs single source calculations, estimating the maximum 1-hour concentrations at pre-specified distances. The model requires relatively straight forward input data on facility-specific stack, meteorology, and terrain.

The main advantage to SCREEN3 is its simplicity of use and the limited data requirements of the user (default values will be provided for most parameters). However, it has two disadvantages. First, it has limited ability to include site-specific meteorological data, as compared with ISC3. It only predicts the maximum downwind concentration based on a range of meteorological conditions, and does not consider the direction of the wind. This means that the maximum concentration could occur under meteorological conditions that rarely, if ever, occur at the site or could be of very short duration. The user is likely to have very little understanding of the representativeness of the meteorological conditions associated with the maximum concentration. A second disadvantage is that SCREEN3 only calculates the maximum 1-hour concentration. For assessment of potential health impacts of long-term (i.e., chronic exposure), this value is not appropriate. Preferably, a chronic health risk assessment should be based on the maximum annual concentration for a representative exposure concentration. There is an "accepted convention" (i.e., not based on hard data) to approximate the maximum annual average concentration by multiplying the 1-hour maximum concentration by a generic conversion factor (U.S. EPA, 1992b). Section 3.2.5 describes this factor and its derivation.

ISC3 is a more sophisticated model and can produce ambient air concentration estimates with higher levels of confidence. It can perform dispersion modeling from multiple sources or different types of sources in the same run. ISC3 also incorporates extensive meteorological data to provide more site-specific dispersion estimations. Another advantage of ISC3 is that it calculates site-specific concentrations with averaging times ranging from 1 hour to multiple year averages at a Cartesian grid or polar network. This means that the ambient concentrations for indicated receptors do not have to be limited at the downwind direction. The user can specify the direction at a reasonable distance. ISC3's advantages come with an added level of complexity: it requires input of several years of local meteorological data (U.S. EPA, 1992a). While this information is readily available from the Internet, downloading these data takes time and experience in air quality meteorology is advantageous. Other input parameters needed by ISC3 are fairly similar to SCREEN3.

3.2.4. Input Parameters to SCREEN3 Dispersion Modeling

A custom user interface was created to incorporate the SCREEN3 model into MFFRST. This included the code that links the output of one calculation (e.g., emission rate estimates) to the input for a subsequent model (e.g., air dispersion) and a "post-processing" program that incorporates SCREEN3's predicted concentrations into MFFRST's exposure and risk assessments. The MFFRST interface prompts the user for input parameters for the dispersion calculations performed by SCREEN3. These include stack parameters, meteorology, terrain, and related factors that are needed by the model to estimate the resulting air concentration at a residence at a given distance from the facility. The main input parameters are as follows:

- Emission rate (grams per second [g/s]), which is predicted by the earlier modeling steps on metal finishing operations;
- Stack height (meters [m]);
- Stack inside diameter (meters [m]);
- Stack gas exit velocity (meters per second [m/s]) or flow rate (cubic feet per minute or cubic meters per second [ft^3/min or m^3/s]);
- Stack gas temperature (Kelvin [K]); and
- Ambient temperature (K) (use default of 293 K if not known).

Other information needed by SCREEN3 includes distance to receptor, receptor height, meteorology, terrain, downwash, and related parameters. MFFRST provides default input values for many of these, except distance from the source to the residence and the urban or rural

designation. Prior to any model calculations, the default values are presented to the user to review them for appropriateness. If the user chooses not to accept a default value for any parameter, a site-specific value should be input. This user interface provides logical constraints on the range of possible values.

It should be noted that SCREEN3 and MFFRST do not account for chemical reactions (transformation) in the atmosphere. MFFRST assumes that no transformation occurs in the air. For example, chromium emitted in the hexavalent form is assumed to stay in that form. This is a conservative but reasonable assumption because the duration of time that emitted chemicals will be in the atmosphere before reaching the potential receptors (i.e., onsite workers and nearby residents) is relatively short.

3.2.4.1. *Emission Source Data*

The air dispersion calculations performed by SCREEN3 rely on a source emission rate for each pollutant, in grams per second. One of the assumptions in Gaussian modeling is that emissions are continuous and that the rate is not variable over time (Turner, 1994). The source emission rate data are provided by MFFRST from the earlier calculations in the facility-specific, generic, or user-defined scenario screens. These data are automatically input to the air dispersion modeling module of MFFRST. This assumption is commonly used in point source assessments. It is acknowledged that many metal finishing shops will typically operate one or two 8-hour shifts per day, for 5 to 7 days per week.

The program assumes that all air emissions from metal finishing operation are released from a single stack. This was done for two main reasons. First, SCREEN3 can only calculate the concentrations emitted from a single stack at one time. If a facility was treated as having multiple stacks, MFFRST would have to run SCREEN3 several times, generating results for each stack and then summing the concentrations emitted from all stacks. Second, the source data in TRI on emissions from metal plating processes is provided on a total facility level, rather than stack-specific basis. Fugitive and stack air emissions data from TRI for metal finishing facilities have been summed, as though they were emitted from a single stack. While these procedures may result in some uncertainty, this assumption makes MFFRST faster and easier to use and, for most facilities, this assumption is not expected to produce an estimated air concentration that is very dissimilar to the result that would have been produced if the model had been run for multiple stacks. The user can specify the values for the lowest non-zero stack height as the representative stack, and use the values of parameters from that stack as model inputs, which may result in a more conservative estimate.

3.2.4.2. *Default Stack Parameter Values*

Stack parameters required by SCREEN3 to estimate ambient air concentrations are stack height, stack inside diameter, stack gas exit velocity, and stack gas temperature. MFFRST provides actual stack parameter data for certain facilities, as well as industry-specific default values.

MFFRST includes actual facility-specific stack parameter values from EPA's Aerometric Information Retrieval System Facility Subsystem (AIRS/AFS) for 64 of the metal finishing facilities for which emissions to air are reported in EPA's 1997 TRI. If a user selects one of these facilities for analysis, MFFRST will provide the corresponding stack parameter data for the air dispersion modeling calculations. If one or more of the stack parameters were not reported for that facility in AIRS/AFS, then MFFRST assigns the industry-specific default value for that parameter. As noted above, MFFRST addresses only one representative stack per facility, so the lowest non-zero height stack was selected for those facilities with multiple stack data in AIRS/AFS. Table 3-1 presents the available stack data for each facility.

When stack information is not available for the facility of interest, or the user does not know the needed information, MFFRST provides default values. These default values are intended to represent a "typical" metal finishing facility. The default values were generated by review of available data on stack parameters of metal finishing facilities (SIC Code 3471) from AIRS/AFS. Several hundred (600 to almost 900, depending on the parameter) data points on various stack parameters were available for metal plating facilities from AIRS/AFS. A two-step approach was used to determine the appropriate default values. First, the distribution of data for each variable was examined, and typical and median values were identified. The data points were analyzed, using median values as well as the "most typical" and "second most typical" as guides. The "most typical" value was the value or range with the greatest number of observations; the "second most typical" value was the value with the second largest number of observations. Figure 3-2 displays an example of the data distribution for stack diameter data. When the value of a certain variable varied widely, a sensitivity analysis was conducted using SCREEN3 to determine the magnitude of influence that these different values have on predicted atmospheric concentrations. Table 3-2 shows the result of default value analysis with AIRS/AFS data.

- **Stack Height** - was distributed from 0 to 261 feet with median value of 25 feet. 85 values of zero were excluded, since a facility is not likely to have a stack height of zero. 78 stacks had the height of 20 feet, while 53 stacks had the height of 25 feet.

Table 3-1. Facility-Specific Stack Parameter Data for Metal Finishing Industry

ID Number	Name	Address	City	County	State	Stack Height (ft)	Stack Diameter (ft)	Stack Exit Gas Velocity (ft/s)	Stack Exit Temp. (F)
00626QLTYLSTATE	QUALITY ELECTROPLATING CORP.	STATE RD. #1 KM 34.2	CAGUAS	CAGUAS	PR	10	0.5	0	0
01089FNTNP492PR	FOUNTAIN PLATING CO. INC.	492 PROSPECT AVE.	WEST SPRINGFIELD	HAMPDEN	MA	20	1	0	300
01247MDRNL510ST	MODERN ALUMINUM ANODIZING CORP	510 STATE RD.	NORTH ADAMS	BERKSHIRE	MA	5	0.5	0	0
02178CMBRD39HIT	CAMBRIDGE PLATING CO.	39 HITTINGER ST.	BELMONT	MIDDLESEX	MA	27	2.4	0	70
06723THWTR114PO	WATERBURY PLATING CO.	114 PORTER ST.	WATERBURY	NEW HAVEN	CT	7	2	0	86
06787QLTYR135SO	QUALITY ROLLING & DEBURRING	135 S. MAIN ST.	THOMASTON	LITCHFIELD	CT	N/A	N/A	N/A	86
06787WHYCCWATER	WHYCO TECHS. INC.	670 WATERBURY RD.	THOMASTON	LITCHFIELD	CT	27	2	0	110
13204NPLTC459PU	ANOPLATE CORP.	459 PULASKI ST.	SYRACUSE	ONONDAGA	NY	14	2.2	27.9	70
23168GRYST7992R	GREYSTONE OF VA	7992 RICHMOND RD.	TOANO	JAMES CITY	VA	26	1.3	21.7	440
24506CRHDG4510M	C. R. HUDGINS PLATING INC.	4510 MAYFLOWER DR. &	LYNCHBURG	LYNCHBURG CITY	VA	16	1	16.6	310
27606SRTRN4001B	SURTRONICS INC.	4001 BERYL RD.	RALEIGH	WAKE	NC	20	0.7	0	100
38040TNNSSVIARR	TENNESSEE ELECTROPLATING INC.	164 VIAR RD.	RIPLEY	LAUDERDALE	TN	10	1.3	0	78
42749KNDCNSOUTH	KEN-DEC INC.	1145 S. DIXIE ST.	HORSE CAVE	HART	KY	13	1	16	77
43206PLTNG800FR	PLATING TECH. INC.	800 FREBIS AVE.	COLUMBUS	FRANKLIN	OH	23	1.3	2.1	250
43567PRFCT1151N	PERFECTION FINISHERS INC.	1151 N. OTTOKEE ST.	WAUSEON	FULTON	OH	8	1.6	45.5	105
44024LCTRD464CE	ELECTRODE CORP.	464 CENTER ST.	CHARDON	GEAUGA	OH	27	1.2	41.5	70
45225MCRMT3448S	MICRO METAL FINISHING INC.	3448 SPRING GROVE AVE.	CINCINNATI	HAMILTON	OH	27	1.2	41.5	70
45404HHMNP814HI	HOHMAN PLATING & MFG. INC.	814 HILLROSE AVE.	DAYTON	MONTGOMERY	OH	N/A	N/A	0	188
46350KYSTN1500G	KEYSTONE SERVICE INC.	1500 GENESIS DR.	LA PORTE	LA PORTE	IN	18	0.83	0	77
46552NKT 30755	I/N KOTE	30755 EDISON RD.	NEW CARLISLE	ST JOSEPH	IN	50	3	0	200
46619MGNRN1302W	IMAGINEERING ENTS. INC.	1302 W. SAMPLE ST.	SOUTH BEND	ST JOSEPH	IN	7	4	175	70
48071HWRDP32565	HOWARD PLATING IND. INC.	32565 DEQUINDRE	MADISON HEIGHTS	OAKLAND	MI	26	1.5	41.9	68
48192CDNPL3715E	CADON PLATING CO.	3715 11TH ST.	WYANDOTTE	WAYNE	MI	36	1.66	3	68
48843DMNDC604SM	DIAMOND CHROME PLATING INC.	604 S. MICHIGAN AVE.	HOWELL	LIVINGSTON	MI	9	1.72	21.5	68
49013BNGRN101RI	BANGOR IND. INC.	101 RICHARD BEER MEMORIAL DR.	BANGOR	VAN BUREN	MI	26	0.5	212.2	110
49201MCHNR520NO	MICHNER PLATING CO.	520 N. MECHANIC ST.	JACKSON	JACKSON	MI	31	0.67	0	350
49224JMPLT401NM	J&M PLATING	401 N. MONROE	ALBION	CALHOUN	MI	22	1.38	0	0
49503GRNDR1141I	GRAND RAPIDS DIE CASTING CORP.	1141 IONIA N.W.	GRAND RAPIDS	KENT	MI	60	2	0	360
49505MCDNL2555O	MACDONALD'S INDL. PLASTICS	2555 OAK INDUSTRIAL DR.	GRAND RAPIDS	KENT	MI	26	1.5	18.8	150
49507MSTRF1160B	MASTER FINISH CO.	2020 NELSON SE	GRAND RAPIDS	KENT	MI	19	0.58	17.3	180
53151STHWS2445S	SOUTHWEST METAL FINISHING	2445 S. CALHOUN RD.	NEW BERLIN	WAUKESHA	WI	20	1.5	N/A	70
53201LLNBR1602S	AMERICA'S BEST QUALITY	1602 S. 1ST ST.	MILWAUKEE	MILWAUKEE	WI	38	2.3	0	75
53209HYDRP3525W	HYDRO-PLATERS INC.	3525 W. KIEHNAU AVE.	MILWAUKEE	MILWAUKEE	WI	25	2	N/A	300

Table 3-1. Facility-Specific Stack Parameter Data for Metal Finishing Industry (continued)

ID Number	Name	Address	City	County	State	Stack Height (ft)	Stack Diameter (ft)	Stack Exit Gas Velocity (ft/s)	Stack Exit Temp. (F)
53212MLWKP1434N	MILWAUKEE PLATING CO.	1434 N. 4TH ST.	MILWAUKEE	MILWAUKEE	WI	1	1	0	70
53212RTSTC428WV	ARTISTIC PLATING CO. INC.	405 W. CHERRY ST.	MILWAUKEE	MILWAUKEE	WI	1	1	0	68
53225SKWLL4600N	S. K. WILLIAMS CO.	4600 N. 124TH ST.	WAUWATOSA	MILWAUKEE	WI	30	2.5	0	310
54304PNRNR486GL	PIONEER METAL FINISHING	486 GLOBE AVE.	GREEN BAY	BROWN	WI	1	0.1	0	50
54304STRND810PA	ASTRO IND. INC.	810 PARKVIEW RD.	GREEN BAY	BROWN	WI	20	2.8	0	70
54729NDNHD1610P	INDIANHEAD PLATING INC.	1610 PALMER ST.	CHIPPEWA FALLS	CHIPPEWA	WI	25	1	0	70
55104PLTNG888NO	PLATING INC.	888 N. PRIOR AVE.	SAINT PAUL	RAMSEY	MN	20	3.5	N/A	70
60007PNDST1250M	API IND. INC.	1250 MORSE AVE.	ELK GROVE VILLAGE	COOK	IL	24	2	46.4	70
60018TWRSR5341N	TWR SERVICE CORP.	5341 N. OTTO AVE.	ROSEMONT	COOK	IL	20	0.7	63.4	70
60067RLNGT600SO	ARLINGTON PLATING CO.	600 S. VERMONT ST.	PALATINE	COOK	IL	22	1.5	0	275
60101MRGNH701FA	MORGAN OHARE INC.	701 FACTORY RD.	ADDISON	DU PAGE	IL	18	1	2.9	250
60107LMNMC501EA	ALUMINUM COIL ANODIZING CORP.	501 E. LAKE ST.	STREAMWOOD	COOK	IL	19	3.3	4.2	250
60131BLMNT3410N	BELMONT PLATING WORKS INC.	3410 N. RIVER RD.	FRANKLIN PARK	COOK	IL	20	1.5	1.8	70
60134NDSTR501FL	INDUSTRIAL HARD CHROME LTD.	501 FLUID POWER DR.	GENEVA	KANE	IL	16	1.5	75.4	70
60162CNDZN4161B	ACE ANODIZING & IMPREGNATING	4161 BUTTERFIELD RD.	HILLSIDE	COOK	IL	9	2	12.7	75
60176CSTLM4631N	CASTLE METAL FINISHING CORP.	4631 N. 25TH AVE.	SCHILLER PARK	COOK	IL	22	0.5	4	120
60473STHHL143W1	SOUTH HOLLAND METAL FINISHING	143 W. 154TH ST.	SOUTH HOLLAND	COOK	IL	6	1	25.4	160
60612GLBRT672NA	GILBERT PLATING CO.	627 N. ALBANY AVE.	CHICAGO	COOK	IL	20	2	43.7	70
60614CLYBR2240N	CLYBOURN METAL FINISHING CO.	2240 N. CLYBOURN AVE.	CHICAGO	COOK	IL	17	3	37.7	75
60614WSTRN3636N	WESTERN RUST-PROOF CO.	3636 N. KILBOURN AVE.	CHICAGO	COOK	IL	28	1.3	43.1	68
60624CHCGN4112W	CHICAGO ANODIZING CO.	4112 W. LAKE ST.	CHICAGO	COOK	IL	18	1	21.1	80
60627RVRDL680WE	RIVERDALE PLATING & HEATING	680 W. 134TH ST.	RIVERDALE	COOK	IL	22	0.7	51.8	220
60651CHRMM4645W	CHROMIUM IND. INC.	4645 W. CHICAGO AVE.	CHICAGO	COOK	IL	35	2.7	16.5	85
60651NBRTP1445N	NOBERT PLATING CO.	1445 N. PULASKI AVE.	CHICAGO	COOK	IL	23	1.3	6.5	70
61008MDWSTPOBOX	U.S. CHROME CORP.	305 HERBERT RD.	KINGSTON	DE KALB	IL	10	0.5	67.6	65
61032MDRNP701SH	MODERN PLATING CORP.	701 S. HANCOCK AVE.	FREEPORT	STEPHENSON	IL	10	1.5	28.2	70
61107CHMCL765NM	CHEMICAL PROCESSING INC.	765 N. MADISON ST.	ROCKFORD	WINNEBAGO	IL	16	1.5	47.1	72
61109CHMPR3910L	CHEM PROCESSING	3910 LINDEN OAKS DR.	ROCKFORD	WINNEBAGO	IL	16	1.5	47.1	72
61354MRCNNWESTM	AMERICAN NICKELOID CO.	2900 W. MAINT ST.	PERU	LA SALLE	IL	5	0.6	0.2	75
63873PLSTN101ME	PLASTENE SUPPLY CO.	101 MEATTE ST.	PORTAGEVILLE	NEW MADRID	MO	18	2	0.8	420
67213MTLFN1423S	METAL FINISHING CO. INC.	1423 S. MCLEAN BLVD.	WICHITA	SEDGWICK	KS	20	0.5	100	350
68522LNCLN600WE	LINCOLN PLATING CO.	600 W. E ST.	LINCOLN	LANCASTER	NE	28	0.8	0	250
80216MDMRC4877N	MID AMERICA PLATING INC.	4877 NATIONAL WESTERN DR.	DENVER	DENVER	CO	23	1.5	2.8	200

Table 3-1. Facility-Specific Stack Parameter Data for Metal Finishing Industry (continued)

ID Number	Name	Address	City	County	State	Stack Height (ft)	Stack Diameter (ft)	Stack Exit Gas Velocity (ft/s)	Stack Exit Temp. (F)
94538GLBLP44620	GLOBAL PLATING INC.	44620 GRIMMER BLVD.	FREMONT	ALAMEDA	CA	26	2.1	N/A	N/A

Source: U.S. EPA's Aerometric Information Retrieval System Facility Subsystem (AIRS/AFS) (retrieval performed in February 2000).

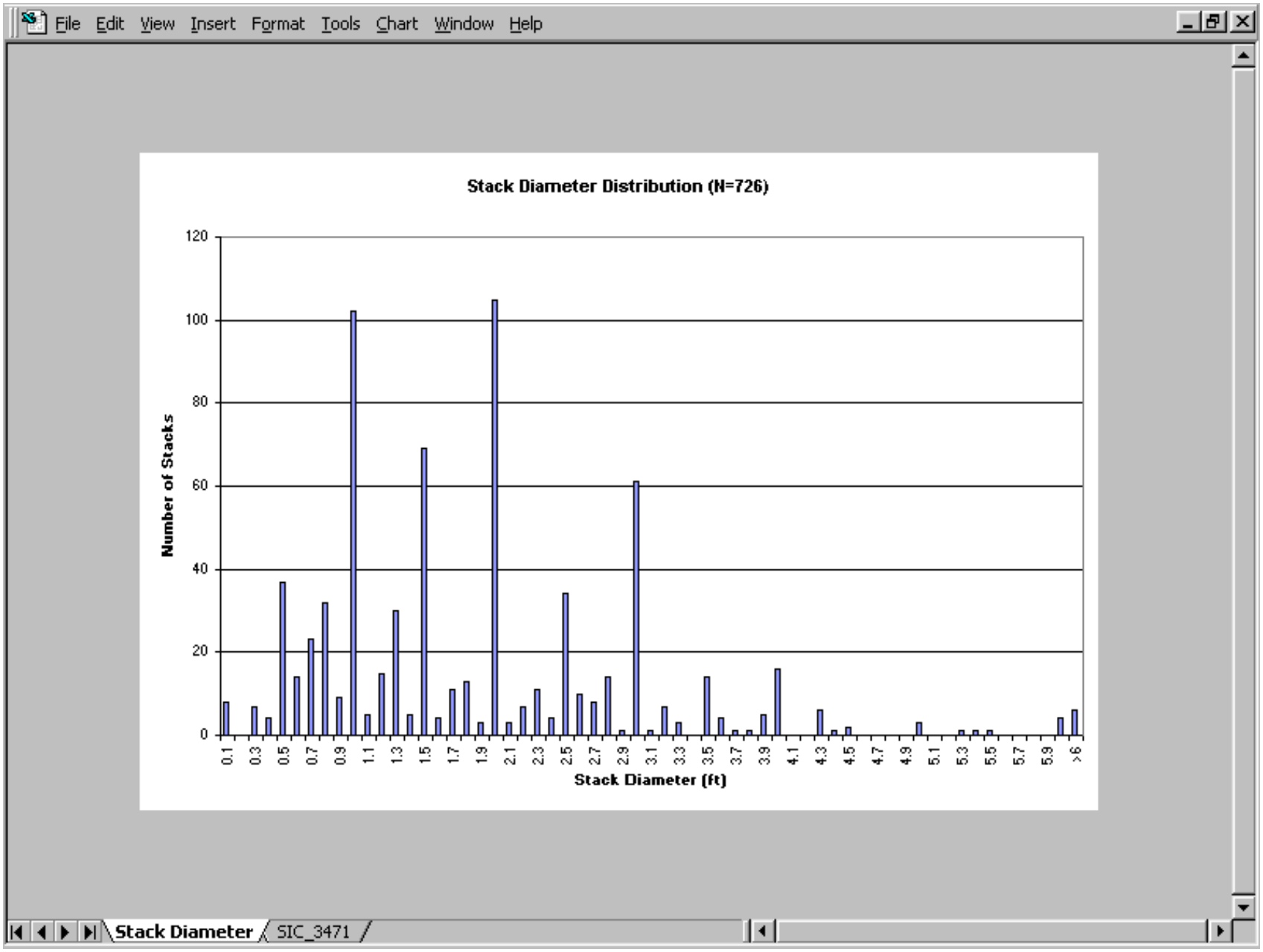

Figure 3-2. Distribution of AIRS/AFS Stack Diameter Data (SIC 3471)

Table 3-2. Information on Stack Parameter Values from AIRS/AFS Data

Parameter	Maximum	Number of Observations*	Median Value*	Most Typical		Second Most Typical	
				Value	Number	Value	Number
Stack Height (ft)	261	851	25.0	20.0	78	25.0	53
Stack Diameter (ft)	48	726	1.5	2.0	105	1.0	102
Exit Temperature (°F)	1500	894	80.6	65-75	304	75-85	176
Exit Velocity (ft/s)	998	623	36.2	>100	67	37.5-42.5	65

* Missing data or zero values were excluded from this analysis

- **Stack Inside Diameter** - was distributed from 0 to 48 feet; median value was 1.5 feet with 89 values of zero excluded. 105 stacks had the diameter of 2.0 feet, while 102 stacks had the diameter of 1.0 feet.

- **Exit Temperature** - was distributed from 0° F to 1500° F; median value was 80° F with 42 values of zero excluded. More than 300 stacks had the temperature ranging from 65° F to 75° F, while 176 stacks had the temperature ranging from 75° F to 85° F.

- **Exit Gas Velocity** - was distributed from 0 to 998 ft/s; median value was 36.2 ft/s with 376 values of zero excluded. The majority of exit velocities ranged from 5 ft/s to 55 ft/s, while 67 stacks had an exit velocity larger than 100 ft/s.

Table 3-3 shows the default values provided by MFFRST for stack height, stack inside diameter, stack gas exit velocity, and stack gas temperature, estimated from AIRS/AFS data. The values were selected based on either the typical value or the median value of the normally-distributed data. For most of the parameters, selecting a default value was straightforward, except for exit velocity. The median value of stack exit velocity was approximately 35 ft/s, but individual values varied widely. Also, quite a few of the data points had very low exit velocities. A sensitivity analysis was conducted to determine the impact of various exit velocities on the downwind concentrations. The analysis indicates that a low exit velocity may have a major impact on concentrations close (within 25 m) to the stack; however, at 500 m, exit velocity does not strongly influence predicted concentrations.

Table 3-3. Default Values for Select Input Parameters to SCREEN3

Parameter	Value in British Units	Value in Metric Units
Stack Height	25 ft	7.65 m
Stack Inside Diameter	1.5 ft	0.4572 m
Stack Gas Exit Velocity	0.1 – 35.0 ft/s	0.03048 – 10.668 m/s
Stack Gas Temperature	80.6 ^{o}F	300 ^{o}K
Ambient Temperature	70 ^{o}F	293 ^{o}K
Receptor Height	4.92 ft	1.5 m

3.2.4.3. *Other Input Parameters*

Other variables required by SCREEN3 are ambient temperature, meteorology, land use classification (urban or rural), terrain, and receptor height (above local ground level). An ambient temperature of 70°F (293°C) is recommended by the user's guide of SCREEN3 and is used as the default value in MFFRST. The default value for receptor height in MFFRST is 1.5 m, a typical assumption for breathing height. Other parameters and the considerations in selecting appropriate values require more extensive discussion. These parameters influence the way the model simulates stability and turbulence in the atmosphere. There is no one air dispersion model capable of simulating all conceivable situations even within a broad category such as point sources (U.S. EPA, 1987). Areas subject to major topographic influences experience meteorological complexities that are difficult to simulate, even with more complex models, such as ISC3. In the absence of a model capable of simulating such complexities, only an approximation is feasible. While MFFRST is intended for nationwide use, the diversity of the nation's topography and climate makes it difficult to accurately estimate air concentrations in every situation. As noted before, MFFRST is a screening tool that can be augmented by more rigorous techniques when estimated risks are at a level of concern to the user.

Meteorology - Wind speed and temperature are two aspects of meteorology that influence concentrations of chemicals at the receptor (Turner, 1994). The effect of horizontal wind speed is relatively straight forward, double the wind speed and the resulting concentration is one half of that with lighter wind speeds. Modeling dispersion is easiest when winds are from one direction, of consistent speed, and the terrain is flat and uninterrupted (like in a rural area). Turbulent flow, influenced by temperature and pressure gradients, as well as irregular topography, is more challenging. Because MFFRST is a conservative screening model, the climatology of the area should be studied to help define the worst-case meteorological conditions.

With respect to information needed by SCREEN3, stability and wind speed are the two most important parameters of meteorological condition which affect ambient pollutant concentrations emitted from an elevated stack. The plume rises to a higher level under an unstable atmospheric environment by momentum and buoyancy forces. On the contrary, the plume will be trapped at a certain height or even descends in a stable atmospheric environment, resulting in a relatively high concentration. Horizontal wind transports pollutants away from the source and dilutes ambient concentrations. The stronger the wind is, the lower the ambient concentration will be.

For simple elevated or flat terrain screening, the user has three choices of meteorological condition: (1) full meteorology including all stability classes and wind speeds; (2) specifying a single stability class; or (3) specifying both stability class and wind speed. Full meteorology is recommended for a combination of stability and wind speed that result in maximum ground-level concentrations. If the user has particular meteorological conditions of concern, he/she can specify either stability only or both stability and wind speed for SCREEN3 modeling.

Stability classes, from A to F, were introduced by Pasquill (1961), considering both mechanical and buoyant turbulence. Class A to C are categorized as unstable regime; class A is strongly unstable, and class C is slightly unstable. Class D is categorized as neutral condition. Class E, slight stable, and class F, moderately stable, fall into stable regime. Mechanical turbulence is considered by including the wind speed of the surface approximately 10 meter above the ground. Strong wind speed produces neutral conditions. Positive buoyant turbulence is considered through the incoming solar radiation (insolation). Under the same wind speed, the stronger the insolation is, the more unstable the class will be. Negative buoyant turbulence is considered through the nighttime cloud cover. Cloud cover traps the heat of infrared radiation escaping from the surface. Therefore, under a condition with mild wind speed, the less the cloud cover is, the more stable the class will be. Horizontal and vertical dispersion parameters vary with stability classes, so the concentrations estimated vary with stability classes.

Urban or Rural Classification - has a significant impact on the downwind concentration and the user is prompted by MFFRST to provide this information. The option of urban or rural affects the estimate of concentration dramatically by giving different wind speed profile at the same stability category. Determination of the applicability of urban or rural dispersion is based upon land use or population density. In general, if 50 percent or more of an area 3 km around the source satisfies the urban criteria, the site is deemed to be in an urban setting (U.S. EPA, 1995).

Terrain - Air quality models are most accurate when simulating long term averages in areas with relatively simple topography (U.S. EPA, 1987). Terrain sometimes significantly affects

ambient ground-level pollutant concentrations through their effects on plume behavior. The important topographic features to note are the location and height of the elevated terrain. SCREEN3 uses two types of terrain, simple or complex. Simple terrain is considered to be an area where terrain features are all lower in elevation than the top of the stack of the source(s) in question. Complex terrain is defined as terrain exceeding the height of the stack being modeled. If terrain height is lower than stack height, SCREEN3 estimates concentrations with its simple terrain option. If terrain height is higher than stack height, the modeling techniques required to simulate such a situation become more demanding. Due to the potential possibility of providing inappropriate information in such a circumstance, only the simple terrain option of SCREEN3 has been incorporated into MFFRST. If the user enters a terrain height that is above the stack height of the facility, the model automatically reduces the entered terrain height to the stack height. For those facilities surrounded by complex terrain, a more complicate model such as ISC3 should be used to obtain a more accurate result.

Downwash Considerations - Downwash effects should be considered in dispersion estimates for point sources whenever the point of release is located on the roof of a building or structure, or within the lee of a nearby structure (i.e., the side sheltered from the wind). Downwash is caused by turbulence induced by a nearby building. When pollutants are emitted from an elevated emission source, downwash effects may result in higher ground-level concentrations to the lee side of the building and lower concentrations further away. Downwash effect should be considered when a structure is located within a distance of five times the lesser of the height or width of the structure, but not greater than 0.8 km (0.5 mile). The following formula is another simple rule of thumb to determine whether the stack is high enough to avoid the possibility of downwash effect:

$$hs \$ hb + 1.5\ Lb$$

where:

hs = stack height (m)
hb = building height (m)
Lb = the lesser of building height or building width (m)

If stack height is larger than or equal to hb + 1.5 Lb, downwash is not likely to be a problem. For a stack surrounded by more than one building, the rule should be applied to each building. Tiered structures, groups of structures, and relatively complex source configurations, a refined modeling technique is recommended. When downwash calculation is selected by the user, building height as well as the maximum and minimum horizontal building dimension should be provided.

3.2.5. Results from SCREEN3 in MFFRST and Converting to Maximum Annual Average Concentration

The standard output from SCREEN3 is the 1-hour maximum concentration in the predominant downwind direction at the receptor distance from the stack specified by the user. This value is converted in MFFRST, using a conservative conversion factor, to an estimated maximum concentration for an annual averaging time. This conversion is appropriate for receptors within 5,000 meters of the source under analysis. The maximum annual average concentration is derived from the 1-hour maximum concentration by multiplying it by a conversion factor, 0.08 (±0.02). This conversion factor was developed by the U.S. EPA, Office of Air Quality Planning and Standards (U.S. EPA, 1992b). This factor is intended to be used for a general case with a degree of conservatism to ensure that the maximum annual average concentration will not be underestimated.

3.3. OCCUPATIONAL FATE AND TRANSPORT MODELING

This section presents the techniques used by MFFRST to estimate occupational exposures in metal finishing facilities. The fate and transport modeling is performed by a "box model" to estimate the indoor air concentrations to which workers may be exposed. Emissions to the work place from metal finishing operations, taken from the previous calculations in the generic or user-defined facility module, are the basis for the box model's predictions of indoor air concentrations. Occupational exposure factors (duration and frequency of exposures) are introduced in this section and are discussed in more detail in Chapter 4 of this document.

Whereas the methods used to estimate air dispersion for residential scenarios have been extensively developed by government agencies responsible for permitting point sources, the approaches to predict indoor air concentrations from sources is relatively unrefined and non-standardized. In general, indoor workplace environments, such as metal finishing facilities, have not been the subject of studies to define and parameterize the relationship between emissions and resulting concentrations. Therefore, a simple, conservative approach was developed for MFFRST.

3.3.1. Methodology/Assumptions

In estimating air concentrations to which workers may be exposed in the metal finishing workplace, two types of workers are of concern: the plating line worker and "other" workers in the plant. Plating line workers are assumed to be exposed to high concentrations of chemical emissions found directly above plating baths as well as lower concentrations throughout the remainder of the plant. Other workers, involved in other processes, as well as office workers, are expected to only be

exposed to lower ambient levels within the plant. MFFRST assumes that these lower concentration levels are uniform throughout the rest of the facility, regardless of location or specific job responsibilities of the workers. It should be noted that MFFRST currently estimates potential exposures only via inhalation. While inhalation exposure is an extremely important exposure pathway, workers can also be dermally exposed to chemical substances. Work practices, use of protective equipment, and effectiveness of housekeeping procedures can greatly influence the extent of dermal exposure.

Emission rates to the workplace are estimated by MFFRST based on the calculations performed by the source estimation techniques in the generic and user defined scenarios (facility-specific emissions estimated are applicable only to receptors external to the facility). Emission rates are summed for all processes within a metal finishing process line in this model (See Section 2 of this document). The default assumption for all processes is that 1 percent of emissions are fugitive emissions that escape into the work space; 99 percent of emissions are assumed to be captured by the ventilation system and emitted from a stack outside the facility (with further reductions if additional pollution controls exist). Because most of the mass emitted from the baths is captured and ventilated, only plating line workers would potentially be exposed to the higher concentrations directly above the baths. Plating line workers are assumed to spend about 1 percent of their time in such locations, usually while handling the plating racks being moved among process steps. This 1 percent assumption could alternatively be interpreted as follows: regardless of the specific location of the plating worker, it is assumed that he is exposed 1 percent of the time to the high concentrations that might be found above the bath. This interpretation of the 1 percent assumption allows for the possibility that the very high concentrations above the bath could drift to locations nearby where the plating line worker is located--it need not be assumed that he is directly above the bath 1 percent of the time. In any case, about 1 percent of their exposure frequency (or 5 minutes in an 8-hour shift) are attributed to this exposure scenario. The user can input site-specific values to represent the situation under analysis.

While the line worker only spends a small portion of the day directly over the baths, the overall magnitude of this exposure, however, is significant. The concentrations above the baths are several orders of magnitude higher than the ambient concentrations in the rest of the plant to which they are exposed for the remainder of their 8-hour shift.

The concentrations above the baths (in units of mass per volume of air) to which the plating line worker will be exposed are calculated from the emission rate from the surface of the tank (in units of mass per time) and the ventilation rate for the tank (in units of volume per time). Obviously, these concentrations are lower than those where no in-bath emission controls, such as polymer balls

or fume suppressants, are used. Minimum ventilation rates (in $ft^3/min\text{-}ft^2$) for tanks are prescribed by the Occupational Safety and Health Administration (OSHA, 1998). OSHA ventilation categories are alpha-numeric codes that assist in determining control ventilation velocity. As introduced in Chapter 2 of this report, these ventilation categories are based on the toxicity of the chemicals being used as well as the temperature/volatility characteristics. Because these minimum ventilation rates are known and used in the emission rate estimation, they can be also applied by MFFRST in estimating the concentration of chemicals directly above the baths.

3.3.2. Use of Box Model for Concentration Estimation

The air concentrations in the rest of the plating facility are much lower than those directly over the baths. The behavior of the emissions that escape ventilation to air pollution control devices and stacks is estimated by the box model, which simulates the size of the plant and ventilation rates to predict the resulting concentrations. Like with the outdoor air dispersion model, the higher the air flow (and the larger the space), the lower the resulting concentration will be. Figure 3-3 presents the concept for these calculations, where a small portion of the mass emitted from the tank escapes the exhaust ventilation system and enters the indoor environment. Specifically, MFFRST assumes that 1 percent of the constituent mass emitted from the tank enters the workplace. This mass is mixed with other air in the plant and is diluted to a lower concentration. This simple approach can be visualized as follows: air above the floor level is uniformly mixed and all fugitive emissions from open baths in the process line become uniformly mixed within the indoor air volume. The formula used by the box model to simulate this calculation is as follows:

$$C_{ia} = \frac{FLUX}{VR}$$

where FLUX is defined as
the total fugitive emission rate of a chemical from all emission points, in units of mass/time, and VR is the ventilation rate in volume/time. The VR can be estimated from direct air flow measurements or equipment ratings. Alternatively, if ventilation is known in terms of air changes per hour, the ventilation rate is calculated as air changes per hour times the room volume.

Concept for Occupational Air Concentration Estimation

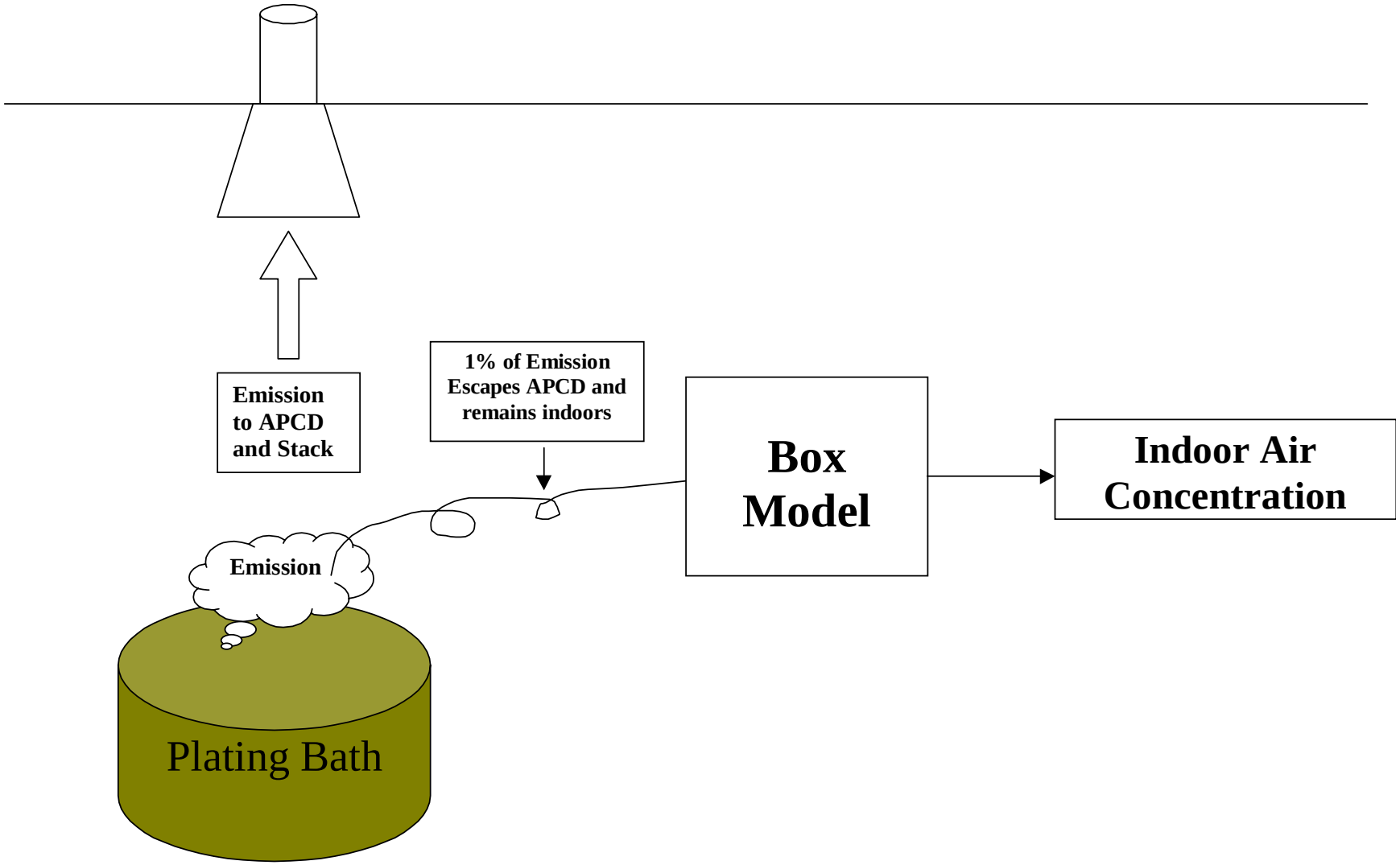

Figure 3-3. Concept for Occupational Exposure Concentration Estimation

The user is prompted to enter a ventilation rate for the metal finishing facility under analysis. The default value provided by MFFRST is 4 million cubic feet per hour which corresponds to a building with a cross sectional area of the box of 200 ft (width) x 25 ft (height) (5,000 ft^2 = 464.5 m^2). Assuming this building is 200 feet in length, then the ventilation rate corresponds to 4 air changes per hour. The box model predicts the resulting air concentrations, which are several orders of magnitude lower than the concentrations directly above the plating line. Ninety-five percent of the exposure time for line workers and all of the time for other workers will be at these ambient concentrations.

3.3.3. Worker Exposure Times and Air Concentrations

As described above, two types of worker exposures are modeled by MFFRST, a plating line worker and other workers. Plating line workers are expected to be exposed 1 percent of daily working time to the higher air concentrations above baths and 99 percent of daily working time to the indoor air concentrations. Two different approaches might be used to estimate the combined exposure from the time in the two exposure zones. One is to use a time-weighted average concentration and to assume 8 hours exposure to that equivalent concentration. The other method would be to estimate the exposure from each situation and add them together. The first option was chosen for MFFRST and is discussed in more detail in Section 4.2.1.

3.3.4. Demonstration of the Box Model

As a simple test to this box model, the default Cr^{+6} uncontrolled emission rate from a hard chromium plating bath was used. The work space had a VR of 4 air changes per hour in a working space whose volume is 1 x 10^6 ft^3 (200 ft wide x 200 ft long by 25 ft high, e.g). Therefore, the ventilation rate is 4 x 10^6 ft^3/hr in units appropriate for the box model. Using the box model, the indoor air concentration was estimated to be about 0.0004 times the concentration of Cr^{+6} directly above the plating baths.

3.4 REFERENCES

OSHA. 1998. OSHA Regulations, 29 CFR 1910.94(d), Subpart G, Occupational Health & Environmental Control. (29CFR1910.94(d) was replaced on 23 Mar 99 [64FR9236] by 29CFR1910.124-.126)

Pasquill, F. 1961. The Estimation of the Dispersion of Windborne Material. Meteorol. Mag., 90 (1063): 33-49.

Turner, D. 1994. Workbook of Atmospheric Dispersion Estimates: An Introduction to Dispersion Modeling. Second edition. CRC Press, Inc. Boca Raton, FL.

U.S. EPA. 1987. Guideline on Air Quality Models (Revised) U.S. EPA, Office of Air Quality Planning and Standards, Research Triangle Park, NC. EPA-450/2-78-027R.

U.S. EPA. 1992a. A Tiered Modeling Approach for Assessing the Risks Due to Sources of Hazardous Air Pollutants. U.S. EPA Office of Air Quality Planning and Standards, Research Triangle Park, NC. EPA-450/4-92-001. March 1992.

U.S. EPA. 1992b. Screening Procedures for Estimating the Air Quality Input of Stationary Sources, Revised. U.S. EPA, Office of Air Quality Planning and Standards, Research Triangle Park, NC. EPA/454/R-92-019. October 1992.

U.S. EPA. 1995. SCREEN3 User's Guide. U.S. EPA, Office of Air Quality Planning and Standards, Research Triangle Park, NC. EPA-454/B-95-004. September 1995.

4.0. DEVELOPMENT OF EXPOSURE SCENARIOS AND RISK ESTIMATION

4.1. INTRODUCTION

This chapter discusses the exposure and risk assessment approaches used in MFFRST to estimate human health impacts from metal finishing air emissions. As stated previously, this tool focuses on air emissions and the inhalation pathway of exposure for residents and workers. Included in this section is a brief review of the risk assessment paradigm, which is the framework for the tool. Described in detail are the exposure assessment techniques used, including the potential receptors, exposure pathways and the default exposure factors provided for MFFRST's assessments. Assessing risks from these exposures requires toxicity data on the chemicals of concern from the metal finishing industry. This chapter presents several types of toxicity data, including cancer slope factors and reference concentrations, that are used to evaluate cancer and non-cancer health effects. Also used are "benchmark" concentrations which are risk-based levels developed for a variety of uses. Comparison of air concentrations against these benchmarks can provide an initial indication of the potential that human health impacts may occur. Finally, the chapter describes the risk characterization, where exposure and toxicity data are combined to produce estimates of cancer risks and non-cancer health effects.

The basic science of conducting exposure and risk assessment, as applicable to the metal finishing industry, was covered in depth in U.S. EPA (1998). Current approaches to environmental risk assessment are built on a paradigm developed by the National Research Council (NRC, 1983) and subsequently implemented by EPA through guidelines (e.g., Guidelines for Cancer Risk Assessment) and programmatic guidance such as *Risk Assessment Guidance for Superfund: Volume I, Human Health Evaluation Manual* (RAGS) (U.S. EPA, 1989). EPA uses risk assessment as a decision making tool to set pollution prevention priorities, to develop regulations, and to measure the success of these efforts. The key components of a risk assessment are: hazard identification, dose-response assessment, exposure assessment, and risk characterization. These components identify the nature of the potential injury (hazard identification), measure the relationship between a given exposure and the potential injury (dose-response assessment), estimate the exposure of individuals and populations (exposure assessment), and combine these three pieces to make quantitative or qualitative statements on the probability that human health impacts may occur (risk characterization). It is important to note that the results derived from MFFRST are generally conservative. If an exposure is found to result in an unacceptably high health risk with a screening model, then the appropriate first response is to refine the parameter input and/or evaluate the problem with different and perhaps more complex models and/or to collect representative air monitoring data.

4.2. EXPOSURE ASSESSMENT AND PATHWAYS

Exposure assessments usually involve characterizing chemical releases, identifying exposed populations, estimating exposure concentrations for specific pathways, and estimating chemical intakes for specific pathways. The exposure pathway addressed by MFFRST is: emissions from the source (metal finishing operations), air dispersion from the source to the location of the receptor, and inhalation by the receptor at the point of exposure (at a residence or in the workplace). Exposure is determined based on the concentrations of chemicals in the air, which are either predicted by MFFRST or input by the user in the concentration-based scenario. Inhalation exposures for plating workers are based on indoor air concentrations and residential exposures are based on predicted outdoor air concentrations (from SCREEN3). The resulting exposure is a function of the concentration and the intensity, frequency, and duration of exposures to the chemicals. These exposure factors will determine the magnitude of the exposure. Other potential pathways involving indirect air exposures, water, wastes, soil, or other media, are not being evaluated at this time.

4.2.1. Receptors

MFFRST estimates exposures and risks for four types of receptors: an "adult resident", a "child resident", a "plating line worker", and an "other worker". The magnitude of exposures for these receptors will likely be different, because of different exposure regimes or from different exposure factors determined by activity patterns and physical characteristics. The adult and child resident are exposed to the same outdoor air concentrations predicted by the SCREEN3 model at a distance from the facility that is provided by the user. As described in Chapter 3, SCREEN3 predicts the air concentration in the residential scenario, based on emission rates, stack data, local terrain, meteorological data, and related information. The differences in their exposures are determined by the years of exposure (30 for adults and 5 years for children) and exposure factors (described below).

The two occupational receptors addressed by MFFRST are the plating line (i.e., process) worker and other workers. These two types of workers were defined to differentiate between workers who are expected to be exposed to high concentrations directly above the plating line and other workers who will inhale ambient air concentrations in the rest of the plating shop. The plating line worker is assumed to be exposed to uncontrolled emissions above the plating baths 5 percent of the working day (about 25 minutes in a typical 8-hour day). The process worker is assumed to spend equal amounts of this time above each tank in the line. Thus, the high concentration is calculated as the average of the concentrations above each bath in the plating line. The

concentrations directly above each bath are determined by the source estimation module of MFFRST in the generic process or user-defined scenarios. This type of worker will be exposed to the lower indoor air concentration for the remainder of the work day (99 percent of the time or about 7.9 hours). This assumption of a 1 percent exposure time was assigned based on engineering judgement. The user can adjust the amount of time the plating line worker spends in this area so the exposure estimate will reflect the actual conditions for the plant and receptor of interest.

Other workers in a metal plating facility are assumed to be exposed to a uniform concentration throughout the plant that is much lower than the concentrations directly above the baths. The box model (described in Chapter 3) estimates these ambient air concentrations assuming one percent of the mass emitted from the baths escape into the plant and are dispersed with fresh air. This dilution is estimated by the box model according to the size of the building and ventilation rates provided by the user. These concentrations are expected to be much lower (typically 3 or more orders of magnitude) than those above the plating line.

4.2.2. Equations for Calculating Exposures

Human exposure is calculated by MFFRST for use in the risk characterization, where the exposure and toxicity data are combined to determine cancer and non-cancer health impacts. Exposure via inhalation is estimated using the equation below:

$$LADD = \frac{C_a * INH * EF1 * EF2 * ED}{BW * AT}$$

where:

LADD	=	lifetime average daily dose, mg/kg-day;
C_a	=	air concentration, mg/m^3;
INH	=	inhalation rate, m^3/hr;
EF1	=	exposure frequency, days/yr;
EF2	=	exposure frequency, hrs/day;
ED	=	exposure duration, yr;
BW	=	body weight, kg; and
AT	=	averaging time, days (for example, for cancer effects is assumed to be a lifetime).

4.2.3. Exposure Factors

Exposure factors include variables used in the above equation to estimate human exposures based on the activity patterns and physical characteristics of the receptor. Values for these factors can be provided by the user to tailor the exposure assessment for a particular receptor. Otherwise, default values are provided by MFFRST based on professional judgement and review of EPA's *Exposure Factors Handbook* (U.S. EPA, 1997a). Consistent with other assumptions in MFFRST, conservative (or "high-end") default values have been provided (U.S. EPA, 1992). "High end" is a term currently used for characterizing exposures that are expected to occur within the 90th to 100th percentile for an exposed population. Where data were unavailable to characterize this high end exposure pattern, judgement was used to establish default values. Therefore, should an exposure or risk estimated with this tool be unacceptably high with the default exposure parameters offered, an assessor should evaluate the appropriateness of these default values for the specific site being evaluated. The default exposure factors for the four receptors considered by MFFRST are described below.

4.2.3.1. *Residential - Adults and Children*

Adult and children residential receptors are exposed to the same air concentrations. The differences in their exposures are determined by the duration and frequency of exposure, as well as different inhalation rates and body weights. Exposure durations are 30 years for adult and 5 years for children (they obviously can be assumed to live longer near the facility, but at some point, their exposures are no longer childhood). Default exposure frequencies are 16 hours/day for adults and 20 hours/day for children, assuming 350 days per year at the residence. Inhalation rates are 20 m^3/day for adults and 10 m^3/day for children and body weights are 70 kg for adults and 16 kg for children. These default values can be adjusted by the user as needed.

4.2.3.2. *Occupational - Process (Line) Workers and Other Workers*

Most of the default exposure factors are the same for both types of workers, including an 8-hour work day and 250 work days/yr on the job. Both receptor types also are assigned a default inhalation rate of 1.25 m^3/hr, 70 years lifetime, and 70 kg body weight. As described in Section 4.2.1, the main difference in exposures for these workers is the percentage of the work day the plating line worker spends directly above the plating baths (default of 1 percent for the plating line worker) exposed to higher concentrations of chemicals. Computationally, the air concentration to which a plating line worker is exposed is calculated as the time-weighted average of the high air concentration above the baths and the more dilute air concentration otherwise calculated to be in the workplace.

4.3. TOXICITY (OR DOSE-RESPONSE) ASSESSMENT

The toxicity of chemicals to which a person may be exposed is a key factor in determining the relationship between the exposure and the probability of the occurrence and severity of an adverse health effect (U.S. EPA, 1998). The toxicity assessment, including the dose-response assessment, considers: (1) the types of adverse health effects associated with chemical exposures; (2) the relationships between magnitudes of exposures and potential adverse effects; and (3) related uncertainties such as the weight of evidence of a particular chemical's carcinogenicity in humans. Toxicity assessments are generally accomplished in two steps. The first step, hazard identification, is the process of determining whether exposure to an agent can cause an increase in the incidence of an adverse health effect (e.g., cancer, birth defects). Hazard identification also involves characterizing the nature and strength of the evidence of causation. The second step, dose-response evaluation, is the process of quantitatively evaluating the toxicity information and characterizing the relationships between the doses of the chemicals administered or received and the incidence of adverse health effects in the exposed population. From those quantitative dose-response relationships, toxicity values are derived that use the estimated incidence of adverse effects occurring in humans at different exposure levels. Typically, environmental risk assessments rely heavily on existing toxicity values developed by EPA.

MFFRST relied on existing EPA sources for the toxicity data on the chemicals of concern. A tiered approach was used to select the most appropriate values from these sources, in priority order: EPA's Integrated Risk Information System (IRIS) (U.S. EPA, 1999a), followed by EPA's Health Effects Assessment Summary Tables (HEAST) (U.S. EPA, 1997b), and then consultation with EPA’s Superfund Health Risk Technical Support Center (STSC) (U.S. EPA, 1999c; 1999d). IRIS contains toxicity data for more than 500 chemicals and is the result of Agency-wide consensus on toxicity values to be used in risk assessments, decision-making, and regulatory activities. HEAST is a comprehensive listing of provisional risk assessment information for chemicals of interest to the Superfund program, RCRA program, and EPA in general. Provisional values from HEAST and STSC are used when no data are available from IRIS for a chemical (or endpoint) of interest. Table 4-1 presents the toxicity data used in MFFRST for chemicals of concern and other chemicals used in the metal finishing industry.

4.3.1. Toxicity Data for Noncarcinogenic Effects

Reference doses (RfDs) and reference concentrations (RfCs) are used for assessing noncarcinogenic health effects such as developmental toxicity, neurotoxicity, and other endpoints.

The risk characterization (described in the next section) combines the RfC with the air concentration,

Table 4-1. Toxicity Data and Benchmark Concentrations for Select Metal Finishing Chemicals

Constituents	CAS Number	Inhalation Chronic RfC (mg/m3)	Ref	Inhalation Unit Risk (mg/m3)-1	Ref	ATSDR Chronic MRLs (see footnote c) (mg/m3)	Region 3 Air RBCs (see footnote g) (mg/m3)	ACGIH 8-hr TWA TLV (see footnote h) (mg/m3)	NIOSH 8-hr TWA REL (see footnote j) (mg/m3)	OSHA 8-hr TWA PEL (see footnote k) (mg/m3)
1,1-Dichloro-1-fluoroethane	1717006									
1,1,1 Trichloroethane (TCA)	71556	2.2e+00	e				1.0e+00	1900	1900	1900
2-Ethoxyethanol	110805	2e-01	a				2.1e-01	18	1.8	740
2-Methoxyethanol	109864	2e-02	a					16	0.3	80
Ammonia	7664417	1e-01	a			2.1e-01	1.0e-01	18	18	35
Arsenic	7440382			4.3e+00	a		4.1e-07	0.01		0.01
Boric Acid	10043353									
Cadmium	7440439	2e-04	e	1.8e+00	a		9.9e-07	0.01		0.005
Chlorine	7782505	2e-04	e				3.7e-01	1.45	1.45	3
Chloroform	67663			2.3e-02	a	1e-01	7.7e-05	50		240
Chromic Acid	7738945							0.05	0.001	0.1 (footnote m)
Chromium (see footnote l)	7440473	8e-06	d	1.2e+01	d			0.05	0.5	1
Chromium (Cr+3)	16065831							0.5	0.5	0.5
Chromium (Cr+6)	18540299	8e-06	a	1.2e+01	a		1.5e-07	0.05	0.001	0.052 (footnote m)
Copper	7440508							1	1	1
Cyanide	57125	7e-02	i				7.3e-02			
Ethylbenzene	100414	1e+00	a				1.1e+00	435	435	435
Ethylene glycol	107211	7e+00	i				7.3e+00			
Ferric chloride	7705080									
Fluoboric acid	16872110									
Formaldehye	50000			1.3e-02	a	3.7e-03	1.4e-04		0.02	0.92
Formic acid	64186	7e+00	i				7.3e+00	9	9	9
Gold	7440575									
Hydrochloric Acid	7647010	2e-02	a				2.1e-02		7	7
Hydrofluoric Acid	7664393								2.5	2.5
Isopropyl alcohol	67630							980	980	980
Lead	7439921							0.05	0.1	0.05
Manganese	7439965	5e-05	a			4e-05	5.2e-05	0.2	1	5
Mercury	7439976	3e-04	a			2e-04	3.1e-04	0.025	0.05	0.1
Methanol	67561	2e+00	i				1.8e+00	260	260	260
Methyl Ethyl Ketone (MEK)	78933	1e+00	a				1.0e+00	590	590	590
Methyl Isobutyl Ketone	108101	8e-02	b				7.3e-02	205	205	410
Methylene Chloride	75092	3e+00	b	4.7e-04		1e+00	3.8e-03	174		87
n-Butyl alcohol	71363	4e-01	i				3.7e-01		150	300

Table 4-1. Toxicity Data and Benchmark Concentrations for Select Metal Finishing Chemicals (continued)

Constituents	CAS Number	Inhalation Chronic RfC (mg/m3)	Ref	Inhalation Unit Risk (mg/m3)-1	Ref	ATSDR Chronic MRLs (see footnote c) (mg/m3)	Region 3 Air RBCs (see footnote g) (mg/m3)	ACGIH 8-hr TWA TLV (see footnote h) (mg/m3)	NIOSH 8-hr TWA REL (see footnote j) (mg/m3)	OSHA 8-hr TWA PEL (see footnote k) (mg/m3)
Nickel	7440020					2e-04		0.1	0.015	1
Nitric Acid	7697372							5	5	5
N-Methyl-2-pyrrolidone	872504									
N,N-Dimethylformamide	68122	3e-02	a					30	30	30
Perchloroethylene (PCE)	127184	4e-02	i			3e-01	3.1e-03	170		678
Phosphoric Acid	7664382	1e-02	a				1.1e-02	1	1	1
Selenium	7782492							0.2	0.2	0.2
Silver	7440224							0.01	0.01	0.01
Sodium Hydroxide	1310732									2
Sodium Hypophosphite	7681530									
Sodium Metasilicate	6834920									
Sodium Phosphate	7558807									
Sulfuric Acid	7664939							1	1	1
Toluene	108883	4e-01	a			1.5e+00	4.2e-01	188	375	750
Trichloroethylene (TCE)	79016						1.0e-03	269	134	537
Xylene (mixed isomers)	1330207	7e+00	i			4.4e-01	7.3e+00	435	435	435
Zinc	7440666									

Notes:
a - IRIS (U.S. EPA, 1999a)
b - HEAST (U.S. EPA, 1997b)
c - ATSDR (1999)
d - As a conservative assumption, toxicity data for hexavalent chromium are used for releases reported as "chromium."
e - Peer-reviewed provisional value of EPA/ORD Superfund Technical Support Center (STSC) (U.S. EPA, 1999c; 1999d).
f - Non-peer-reviewed provisional value of EPA/ORD/STSC (U.S. EPA, 1999c; 1999d).
g - Region 3 RBCs (U.S. EPA, 1999b) are presented only for chemicals with EPA RFCs or Unit Risk Values.
h - ACGIH (1998)
i - RfCs extrapolated from oral RfDs by multiplying the RfD by 70 kg and then dividing the result by 20 m^3 air/day.
j - NIOSH (1999)
k - OSHA (1999)
l - Chromium metal & Insoluble Salts
m - OSHA regulations, 29CFR 1910.1000, Table Z-2 lists the PEL for “chromic acid and chromates” as 0.1 mg/m^3. However, Table Z-1 lists “chromic acid & chromates (as CrO_3),” but does not give a PEL value. Instead, Table Z-1 refers the reader to Table Z-2. Therefore, if one assumes that the PEL for CrO_3 is 0.1 mg/m^3, then an effective PEL for hexavalent chromium (Cr^{+6}) would be 0.052 mg/m^3, because Cr^{+6} is 52% by weight of CrO_3.
* - Carcinogenic Weight of Evidence Group for Chromium VI is A for inhalation and D for oral.

adjusted for exposure factors, to estimate human health impacts. Assessing the toxicological significance of exposures to chemicals with these types of effects assumes that harmful effects will occur only when an individual's exposure exceeds some threshold level. For receptors exposed over a lifetime, the chronic RfD or RfC should be used. These values are estimates (with uncertainty spanning perhaps an order of magnitude) of the daily exposure to the human population that are likely to be without appreciable risk of deleterious effects during a lifetime. In the case of MFFRST, since inhalation is the exposure route, the RfC (in units of milligrams per cubic meter, mg/m^3) is the value used to assess health effects of exposures.

For example, the chronic RfC for hexavalent chromium mists and dissolved aerosols is 8.6E-06 mg/m^3. Justification for this value can be found in EPA's Integrated Risk Information System, or IRIS (www.epa.gov/iris). This RfC was only recently put onto the IRIS database by EPA. The critical effect for which this was developed was nasal septum atrophy. It was based on the study of Lindberg and Hedenstierna (1983), which had an occupational exposure scenario comprised of an 8-hour day, a breathing rate of 10 m^3/day, and a 5-day work week. The derivation of the RfC adjusted this occupational exposure to reflect a continuous environmental exposure for the same total intake. Also, its derivation included an uncertainty factor of 90 (i.e., the adjusted concentration derived from the literature study was divided by 90) which considered the extrapolation from a subchronic to a chronic exposure (factor of 3), extrapolation from a lowest observed adverse effect level (LOAEL) to a no observed adverse effect level (NOAEL; factor of 3), and an adjustment factor to account for interhuman variation (a factor of 10; from IRIS).

4.3.2. Toxicity Data for Cancer Effects

Carcinogenic slope factors (SFs) and unit risks are used to represent the toxicity of carcinogenic chemicals. These values are estimates of the relationship between dose or concentration and the probability that a chemical will induce cancer. Risk assessments use these values to determine cancer risks to individuals from exposures that occur over a lifetime. Because these values are upper bound estimates, the actual risk of cancer over a lifetime is unlikely to exceed the calculated probability and likely will be less. Unit risks, used in MFFRST, are upper bound estimates of the cancer risk per unit of concentration of a chemical in air to which a person is assumed to be continuously exposed over his/her lifetime. For example, an inhalation unit risk of 1.20E-02 $(mg/m^3)^{-1}$ and an inhalation slope factor of 4.10E+01 $(mg/kg\text{-}day)^{-1}$ are available from IRIS for hexavalent chromium, the carcinogen of greatest concern from metal finishing operations.

4.3.3. Benchmarks

"Benchmark" concentrations are chemical-specific values developed by regulatory and/or scientific organizations that can be used to evaluate the potential for adverse health impacts from exposures to contaminants in various media (soil, drinking water, air). They are usually derived from available toxicity data for a typical exposure scenario, based on default exposure parameters. As such, they should not be used as site-specific *"safety"* levels or for definitive assessments of human health impacts from chemical exposures. The RfCs (described above) can be considered to be one example of a benchmark. Other benchmarks available for use in MFFRST are described in the following paragraphs. Use of benchmarks is described below in the risk characterization section.

Risk-Based Concentrations (RBCs) were developed by the Superfund Technical Support Section in EPA Region 3 (U.S. EPA, 1999b). RBCs are chemical concentrations corresponding to fixed levels of risk (i.e., a HQ of 1, or lifetime cancer risk of 1E-6, whichever occurs at a lower concentration) in water, ambient air, fish tissue, and soil. Only the RBCs for ambient air are utilized in MFFRST. The ambient air RBCs were derived by combining standard exposure scenarios with RfCs and Unit Risk values. RBCs can be obtained from EPA Region 3 at *http://www.epa.gov/reg3hwmd/risk/riskmenu.htm.*

Minimal Risk Levels (MRLs) are derived by the Agency for Toxic Substances and Disease Registry (ATSDR) using a procedure similar to that used by EPA to derive RfCs. An MRL is an estimate of the daily human exposure to a substance that is likely to be without appreciable risk of adverse noncancer health effects over a specified duration of exposure. The MRLs used in MFFRST are "chronic" MRLs (i.e., for exposure durations of 365 days and longer). MRLs are based on noncancer health effects only and do not consider cancer effects. MRLs can be obtained from ATSDR at *http://www.atsdr.cdc.gov/mrls.html*.

Permissible Exposure Limits (PELs) are regulatory standards promulgated by the Occupational Safety and Health Administration (OSHA) to control worker exposure to hazardous substances (including both cancer and noncancer causing substances). MFFRST uses the 8-hour time weighted average (TWA) PELs. In general, PELs are established assuming that workers are a relatively healthy cohort of the population and are only exposed to the substance during the working portion of their adult lives. PELs are issued as part of the OSHA General; General Industry Air Contaminants Standard (29 CFR 1910.1000) (see *http://www.osha-slc.gov/OshStd_data/1910_1000_table_z-1.html*).

Recommended Exposure Limits (RELs) are developed by the National Institute for Occupational Safety and Health (NIOSH) for hazardous substances in the workplace. NIOSH

evaluates all available medical and biological information relevant to a substance when developing a REL. The RELs used in MFFRST are TWA concentrations for up to a 10-hour workday during a 40-hour workweek. RELs can be accessed at *http://www.cdc.gov/niosh/npg*.

Threshold Limit Values (TLVs) are developed by the American Conference of Governmental Industrial Hygienists (ACGIH) as recommended air concentrations of substances to which it is believed that nearly all workers may be repeatedly exposed day after day without adverse health effects (i.e., cancer and noncancer health effects). The TLVs used in MFFRST are the TWA concentrations for a conventional 8-hour workday and a 40-hour workweek. TLVs can be obtained from ACGIH (phone: 513-742-2020).

4.4. RISK CHARACTERIZATION

The risk characterization combines information from hazard identification, dose-response assessment, and exposure assessment steps. Both quantitative assessments and expressions and qualitative statements (such as uncertainty) are included in risk characterizations. Quantitative assessments include comparison of air concentrations against select benchmarks. The main presentation of the results of this characterization are cancer risks, non-cancer hazard quotients (HQs) and hazard indices (HIs). Carcinogenic risk, expressed in scientific notation (e.g., an individual lifetime risk of one in 1,000,000 is represented as 1×10^{-6} or 1E-06), is the increased cancer incidence resulting from exposure to proven or suspected carcinogens. If the probability of increased cancer incidence is greater than 1×10^{-4}, then a more detailed risk assessment should be performed. A hazard quotient is the ratio of the specific air concentration predicted (or measured, or derived in some manner) divided by the non-cancer RfC. HQs that equal or exceed 1.00 indicate a situation of potential health concern for non-cancer effects.

4.4.1. Comparison to Benchmarks

A rough approximation of the potential for adverse effects is provided by a comparison between a predicted (or measured in the concentration-based scenario) concentration and benchmarks. If the exposure concentrations are at or above these numbers, there is a possibility that individuals may be at risk and a more detailed risk assessment should be performed.

Three benchmarks are available in MFFRST for residential scenarios: the RfC, the MRL, and the RBC, all of which are widely-accepted screening levels of residential exposure above which adverse health effects may occur. The RfC and MRL are estimates of a daily inhalation exposure of the human population that is likely to be without an appreciable risk of deleterious non-cancer

effects. The RBCs are based on cancer and non-cancer dose-response toxicity values. Three benchmarks are available in MFFRST for occupational exposures: the 8-hour time weighted average (TWA) OSHA Permissible Exposure Limit (PEL), the ACGIH 8-hour TWA Threshold Limit Value (TLV), and the NIOSH 8-hour TWA Recommended Exposure Limit (REL).

4.4.2. Non Cancer Health Effects

The risk characterization for non-carcinogenic chemicals involves the calculation of hazard quotients (HQs) and hazard indices (HIs). An HQ is the ratio of the air concentration divided by the chronic RfC. The HI is the sum of the HQs for each chemical included in the risk characterization. If the HQ for a chemical equals or exceeds 1.00, it indicates a situation of potential health concern. Similarly, an HI greater than or equal to 1.00 may indicate concern for health impacts. In this instance, additivity of effects is assumed in order to be conservative. This is one uncertainty of the non-cancer assessment. More information on uncertainties is presented in Section 5.4.

The derivation of an RfC value includes assumptions of 20 m^3/day inhalation rate, 365 days/yr exposure frequency, and an adult body weight of 70 kg. To adjust the RfC for lower (or higher) inhalation rates, exposure frequencies, and body weights, the following equation should be used:

$$RfC_{adj} = RfC * ADJ_{inh} * ADJ_{dpy} * ADJ_{bw}$$

where:

RfC_{adj}	=	the adjusted RfC, mg/m^3;
RfC	=	the unadjusted RfC, mg/m^3;
ADJ_{inh}	=	inhalation rate adjustment factor, equal to INH/20, where INH equals the daily inhalation rate, m^3/day;
ADJ_{dpy}	=	days per year adjustment factor, equal to EF/365, where EF is the annual exposure frequency, days/yr;
ADJ_{bw}	=	body weight adjustment factor, equal to 70/BW for adults, where BW is the adult body weight, and equal to 16/BW, where BW is the child body weight.

4.4.3. Cancer Risks

For carcinogens, human health risks are expressed as a probability. For the air route of exposure, the unit risk for the chemical of concern should be used. The unit risk is expressed in units such as $1/(\mu g/m^3)^{-1}$, so multiplication of the unit risk by a given air concentration (in $\mu g/m^3$) will yield a cancer risk. The derivation of a unit risk value assumes the exposure is over a lifetime (70 years). The "lifetime of exposure" includes assumptions of 20 m^3/day inhalation rate, 365 days/yr exposure frequency, 70 years exposure duration (equal to a lifetime), and an adult body weight of 70 kg. To adjust the cancer risk estimate for shorter exposure durations (or adjustments in other exposure factors), the following equation should be used (U.S. EPA, 1998; Lorber et al., 1999).

$$R = unit\ risk * C_a * ADJ_{inh} * ADJ_{dpy} * ADJ_{ed} * ADJ_{bw}$$

where:

R	=	cancer risk, equal to the probably of incurring cancer within a lifetime;
unit risk	=	contaminant-specific cancer potency factor associated with a lifetime of exposure, $1/(mg/m^3)$;
C_a	=	air concentration, mg/m^3
ADJ_{inh}	=	inhalation rate adjustment factor, equal to INH/20, where INH equals the daily inhalation rate, m^3/day;
ADJ_{dpy}	=	days per year adjustment factor, equal to EF/365, where EF is the annual exposure frequency, days/yr;
ADJ_{ed}	=	exposure duration adjustment factor, equal to ED/70, where ED is the number of years of exposure, yr;
ADJ_{bw}	=	body weight adjustment factor, equal to 70/BW for adults, where BW is the adult body weight, and equal to 16/BW, where BW is the child body weight.

The cancer risk can also be calculated using the Lifetime Average Daily Dose (LADD) and the cancer slope factor. The LADD is the amount of a particular chemical the receptor would be exposed to over a lifetime. The cancer risk is the product of the LADD and the cancer slope factor, in appropriate units. As stated above, if the probability of increased cancer incidence is greater than 1×10^{-4}, then a more detailed risk assessment should be performed. Uncertainties in cancer risks are discussed in Section 5.4. In addition, applications of these calculations to various example scenarios are presented in Section 5.2 of this document.

4.5. REFERENCES

Agency for Toxic Substances and Disease Registry (ATSDR). 1999. Minimal Risk Levels for Hazardous Substances (April 1999). http://www.atsdr.cdc.gov/mrls.html

American Conference of Governmental Industrial Hygienists (ACGIH). 1998. 1998 TLVs and BEIs. Cincinnati, OH. ACGIH. ISBN:1-882417-23-2.

Lindberg, E., G. Hedensteirna. 1983. Chrome Plating: Symptoms, Finding in the Upper Airways and Effects on Lung Function. Arch. Environ. Health 38:367-374.

Lorber, M., P. Shapiro, D. Bottimore, S. Schwartz, C. Peck, and D. Meng. 1999. A Risk Assessment Tool for the Metal Finishing Industry. Presented at American Electroplaters and Surface Finishers Conference, Orlando, FL, January, 1999.

National Institute for Occupational Safety and Health (NIOSH). 1999. NIOSH Pocket Guide to Chemical Hazards. http://www.cdc.gov/niosh/npg.

NRC (National Research Council). 1983. Risk Assessment in the Federal Government: Managing the Process. Washington, DC: National Academy Press.

Occupational Safety and Health Administration (OSHA). 1999. OSHA Regulations (Standards-29 CFR) Limits for Air Contaminants. http://www.osha-slc.gov/oshstd_data.

U.S. EPA. 1989. Risk Assessment Guidance for Superfund, Volume I. Human Health Evaluation Manual (Part A). Interim Final, December 1989.

U.S. EPA. 1992. Guidelines for Exposure Assessment. Office of Health and Environmental Assessment. EPA/600-Z-92/001. Published in Federal Register, May 29, 1992, p. 22888-22938.

U.S. EPA. 1997a. Exposure Factors Handbook. U.S. EPA Office of Research and Development. EPA/600/P-95/002.

U.S. EPA. 1997b. Health Effects Assessment Summary Tables (HEAST), FY97 Update. EPA-540-R-97-036.

U.S. EPA. 1998. Characterizing Risk at Metal Finishing Facilities: Meeting the Needs of all Stakeholders. Office of Research and Development. EPA/600/R-97/111, May 1998.

U.S. EPA. 1999a. Integrated Risk Information System (IRIS). Office of Research and Development. http://www.epa.gov/ngispgm3/iris/search.htm.

U.S. EPA. 1999b. EPA Region 3 Risk-based Concentration Table. http://www.epa.gov.reg3hwmd/risk/riskmenu.htm.

U.S. EPA. 1999c. Memorandum from Patricia A. Daunt (Superfund Health Risk Technical Support Center) to Matthew Lorber (EPA National Center for Environmental Assessment). Review of Metal Finishing Table for NCEA-Cin. August 4, 1999.

U.S. EPA. 1999d. E-mail from Harlal Choudhury (Superfund Health Risk Technical Support Center) to Matthew Lorber (EPA National Center for Environmental Assessment). RfDs to RfCs. September 14, 1999.

5.0 MODEL TESTING AND EVALUATION

This chapter presents the capabilities of the MFFRST model, demonstrating a number of different modeling scenarios and showcasing typical outputs expected for occupational and residential exposures. Another key goal of this chapter is to foster a clear understanding of the potential impact on results of changing modeling inputs.

This chapter will present only a few of the possible ways that MFFRST may be used to generate useful information about emissions from and health risks associated with metal finishing plants. Users are encouraged to test the model and compare output obtained with empirically derived monitoring information.

MFFRST offers users four options:

1. The user may input empirically derived ambient air concentration data;
2. The user may access the TRI emissions data base and input emissions information obtained;
3. The user may use "generic" metal finishing process line data to calculate exposures; and
4. The user may create/define their own metal finishing process line. The user may create this option by choosing from among 17 metal finishing line operations and 25 constituents.

The focus of this chapter includes use of the second and third options; use of the first and fourth options are not discussed in this chapter.

5.1. VALIDATION EXERCISES

5.1.1. Comparison of MFFRST Predictions to TRI Reported Emissions

MFFRST allows the user to evaluate the impact of TRI-reported emissions to nearby residents. The TRI-reported emissions for facilities in SIC Code 3471 (i.e., Electroplating, Plating, Polishing, Anodizing, and Coloring) were retrieved from the 1997 TRI data base and were saved in a database within MFFRST. By selecting one of these records, a user can evaluate, in a screening mode, the impact of those emissions to nearby residents (with other appropriate inputs such as stack height, distance to the residence, etc.).

If an individual would like to assess the impacts of a specific metal finishing facility, but that facility did not enter emissions data into the 1997 TRI data base, the user could select a generic plating line, or lines, to describe emissions from the specific facility in question. Obviously, the user would need to know what type of plating operations, and what type of tanks, are in the facility. Given a reasonable representation of the plating operation within the facility, one obvious question arises. How well would MFFRST predict emissions out of the stack of that facility? In other words, do the generic lines in MFFRST reflect the metal finishing industry as portrayed in the TRI data? More specifically, how well do the emissions predicted to occur in MFFRST compare with the emissions as reported in the TRI data base?

As a crude way of attempting an answer to this question, average TRI-reported emissions were compared to the emissions predicted by MFFRST for the pre-defined generic plating lines. The TRI data used were for 19 chemicals reported by SIC Code 3471 facilities in TRI. The 19 chemicals are those that are available for use in the process tanks in the 17 MFFRST metal finishing lines (see Figures 2-1 through 2-16). The comparative data are shown on Table 5-1.

The comparison accuracy is tenuous at best because TRI lists total annual emissions of each chemical for a facility, whereas MFFRST shows the amount of controlled emissions from each process tank that has the potential to emit that chemical. For instance, six facilities reported on TRI that they emitted to the atmosphere an average of 250 pounds per year each of cadmium. The only location where cadmium is an available emission source in MFFRST is from the cadmium plating tank on the cadmium plating line (Figure 2-8). The MFFRST controlled emissions of cadmium are predicted to be 0.0082 pounds per year; more than 30,000 times less than the 250 pounds reported by TRI. A three to four order-of-magnitude difference (i.e., 1,000 to 10,000 fold) appears to be typical for metal emissions when comparing TRI data to MFFRST predictions.

Another example that illustrates this difference is copper. The TRI value for average emissions of copper to the atmosphere per facility is 180 pounds per year. MFFRST predicts that all tanks that might be a source of copper produce a total of 0.029 pounds per year; more than a 6,000 fold difference. (Tanks that might emit copper are the copper cyanide strike and copper cyanide plating tanks on the decorative chromium plating line [Figure 2-2], the copper cyanide strike and the copper cyanide plating tanks on the copper plating line [Figure 2-6], and the copper cyanide strike and the acid copper plating tank on the acid copper plating line [Figure 2-7].)

Table 5-1. Comparison of TRI Data with MFFRST Predictions

CHEMICAL NAME	TRI Data (lb/yr)			MFFRST Runs Using Default Values (lb/yr)																	
	Number of Facilities	Average per Facility	Maximum	Hard Chromium Plating	Decorative Chromium Plating	Trivalent Chromium Plating	Cadmium Plating	Copper Plating (Cyanide)	Copper Plating (Acid)	Gold Plating	Nickel Plating	Electroless Nickel Plating	Anodizing (Sulfuric Acid)	Anodizing (Chromic Acid)	Chromate Conversion Coating	Phosphate Coating	Zinc Plating (Cyanide)	Zinc Plating (Chloride)	Zinc Plating (Alk. Non-Cyan.)	Silver Plating	Vapor Degreasing
1,1,1-Trichloroethane	6	1.0E+4	2.0E+4																		1.8E+4
Cadmium	6	2.5E+2	7.5E+2				8.2E-3														
Chrome and Compounds	77	1.6E+2	1.1E+3	1.1E-2	7.3E-3	1.8E-2	1.0E-2							3.6E-1	7.6E-2		1.0E-2	1.0E-2	1.0E-2		
Copper and Compounds	53	1.8E+2	1.9E+3		1.2E-2			1.2E-2	5.0E-3												
Cyanide	50	3.8E+2	2.0E+3		1.8E-2		1.0E-2	1.8E-2	7.3E-3											1.3E-1	
Hydrochloric Acid	32	2.1E+3	1.9E+4			1.6E+0	1.6E+0							1.6E+0			1.6E+0		1.6E+0		
Methanol	6	3.1E+4	1.6E+5																		6.9E+3
Methyl Ethyl Ketone	23	3.3E+4	3.5E+5																		1.3E+4
Methylene Chloride	4	31.E+4	8.5E+4																		3.8E+4
Nickel and Compounds	102	2.5E+2	6.6E+3		4.8E-2	4.8E-2				4.8E-2	4.8E-2	1.7E-2	3.4E-3	3.4E-3							
Nitric Acid	188	8.7E+2	1.4E+4										8.0E+0	8.0E+0	8.0E+0						
Perchloroethylene (PCE)	18	2.1E+4	9.4E+4																		5.2E+3
Phosphoric Acid	55	9.9E+2	1.5E+4													3.9E-1					
Silver	4	1.6E+2	3.1E+2																	1.1E-1	
Sulfuric Acid	18	1.6E+3	1.7E+4	4.0E+0	8.0E+0			4.0E+0	8.1E+0	4.0E+0	4.0E+0	4.0E+0	2.5E+1	2.4E+0				4.0E+0		4.0E+0	
Trichloroethylene (TCE)	56	2.0E+4	1.2E+5																		1.0E+4
Zinc and Compounds	48	8.4E+2	6.5E+3														2.0E-2		3.5E-3		

These differences are quite significant. However, there are a number of very probable reasons for these differences:

- MFFRST predicts controlled emissions that use air pollution control devices that are typically more than 99.9% effective. If TRI submittals are for tanks that are uncontrolled, or for air pollution control devices that are significantly less than 99.9% effective, this would clearly help explain why MFFRST predicted emission rates are lower than TRI data.

- Many facilities have more than one metal finishing line. For instance, in the example above, with copper, if there were 30 lines that conducted copper plating, instead of the three lines cited in MFFRST, then MFFRST predicted emissions would be 10 times as high.

- Metal finishing tanks may be larger in surface area than the 20 square feet assumed as a default in the MFFRST model. Doubling tank surface area would double emissions.

- Actual concentrations of chemicals in metal finishing baths may be higher than those used as defaults in MFFRST.

- Actual ventilation rates at TRI-reporting facilities may be higher than those predicted by MFFRST. In some cases, MFFRST predicts no ventilation (e.g., gold plating).

- TRI-reporting facilities might emit the chemicals in question from processes that are not in the MFFRST tool. For instance, MFFRST does not account for emissions from mechanical operations such as grinding, buffing, and welding.

- There may be more turbulence in process tanks than that estimated by MFFRST, creating greater emissions. MFFRST assumes that electrolytic tank turbulence is caused only by electrolytic activity. However, many electrolytic tanks also aerate the tank contents, causing additional emissions. (In electrolytic tanks, MFFRST estimates turbulence in proportion to current density, and inversely proportional to cathode efficiency. In non-electrolytic tanks turbulence is a function of aeration rate, bubble size, and surface tension.)

- Significantly more emissions may escape (i.e., do not enter) air pollution control devices than is predicted by MFFRST. (Essentially, MFFRST assumes that all tank emissions for which there is ventilation are captured by the ventilation system.)

- Those reporting emissions under TRI may be overestimating emissions. This would not be hard to imagine. If emissions estimates are based on stack testing they may not be representative, because stack testing is usually a one-time event. Also, there is significant room for error if emissions are estimated by subtracting the sum of: (1) the amount of metal plating/coatings shipped to customers on the facility's product, plus (2) the amount discharged in wastewater, plus (3) the amount of metals disposed of as solid waste, *from* the amount of metals/metal-containing chemicals purchased. A slight error

in any one of these values is likely to cause a significant change in the emissions estimate.

For the six organic solvents that the MFFRST user has available, MFFRST predicted concentrations are very similar to the TRI reports. For instance, for trichloroethylene (TCE), TRI shows that the average emission per facility is 2.0×10^4 pounds per year. MFFRST predicts that a single TCE solvent degreasing tank will emit 1.0×10^4 pounds per year.

The reason the TRI versus MFFRST comparison is good for solvent emissions, but poor for metal emissions, is that MFFRST assumes that there are essentially no controls on exhausts from solvent degreasing operations. This implies that MFFRST may significantly overpredict the effectiveness of air pollution control devices on metal-bearing tanks.

To properly test MFFRST, emissions from various tanks in actual metal finishing shops were tested, for both controlled and uncontrolled emissions. Such testing is the subject of Section 5.1.2 of this document.

5.1.2. Comparison of Actual Stack Testing Emissions Data to MFFRST Predictions

Thirteen sets of actual hard chromium electroplating stack sampling results were reviewed and compared to predictions made by MFFRST. References for the 14 sets of data are given in Section 5.5. Table 5-2 summarizes the sampling data. Most of the data are for controlled emissions only. However, the Hawker Pacific data also include emission results from uncontrolled emissions. All data are for total chromium emissions, except for the DoD data, which is hexavalent chromium. The emission controls used for each set of tests were a variety of scrubbers, HEPA filters, and mist eliminators, with a variety of different exhaust configurations. In addition to a scrubber, Kwikset also controlled its emissions with a fume suppressant. Canyon Precision Plating and Grinding used fume suppressants and polymer balls in addition to mist eliminators and a HEPA filter. Grant Piston Rings used a fume suppressant and polymer balls, as well as a scrubber. For the two DoD electroplating facilities only uncontrolled emissions data were available. The types of emission controls are noted on Table 5-2.

Table 5-2. Chromium Plating Emissions Verification Data*

1	2	3	4	5	6	7	8	9	10	11	12	13	14
Name of Facility/Test	Air Pollution Control Device*	Controlled Chromium Emissions (mg/day)					Bath Conc. (g/l Cr-t)		col.9/col.8	Tank Surf. Area (sq.ft.)	Air Flow (1000cfm)		col.13/col.12
		Predicted	Actual	col.4/col.3	Log (Predicted)	Log (Actual)	Predicted	Actual			Predicted	Actual	
Electronic Chrome & Grinding	ME, HEPA	6.30e+01	6.14e+02	9.7	1.80	2.79				166.0	56.4	22.0	0.39
Accu Crome Plating	Scrub.	5.59e+03	4.05e+03	0.7	3.75	3.61				89.0	30.3	3.5	0.11
Canyon Precision Plat.&Grind.	PB, FS, ME, HEPA	2.18e+01	8.20e+01	4	1.34	1.91	160	105	0.66	116.0	39.4	11.6	0.29
Multichrome	Scrub.	8.43e+02	1.86e+03	2.2	2.93	3.27				118.0	40.1	9.4	0.23
Grant Piston Rings	PB, FS, Scrub.	2.15e+02	9.12e+02	4.2	2.33	2.96				18.9	6.4	2.4	0.38
US Chrome Corp. of California	ME, HEPA	3.40e+01	7.40e+01	2.2	1.53	1.87				117.0	39.8	12.0	0.30
Chrome Crankshaft (Scrubber#3)	Scrub., ME, HEPA	2.90e+01	1.42e+02	4.9	1.46	2.15	160	132	0.83	40.0	13.6	12.2	0.90
Chrome Crankshaft (Scrubber#1)	Scrub., ME, HEPA	3.20e+01	3.00e+02	9.4	1.51	2.48	160	164	1.03	40.0	13.6	11.0	0.81
Hawker Pacific (low load)	Scrub.	5.94e+03	< 487	<0.082	3.77	2.69	160	109	0.68	60.0	20.4	5.4	0.26
Hawker Pacific (high load)	Scrub.	5.46e+03	< 1,100	<0.20	3.74	3.04	160	104	0.65				
Kwikset	FS	5.10e+01	6.83e+02	13.4	1.71	2.83	160	150	0.94	73.5	25.0	16.0	0.64
Kwikset	FS, Scrub.	5.80e+00	1.03e+02	17.8	0.76	2.01							
		Aver. of Actual / Predict. =		5.7			Aver. % of Predic. for Cr Conc. =				Aver. % of Pred. for Air Flow =		43
		UNcontrolled Chromium Emissions (mg/day)											
Hawker Pacific													
Tank 2 - (low load)	N/A	2.64e+05	1.41e+05	0.53	5.42	5.15	160	109	0.68			1.8	
Tank 4 - (low load)	N/A	1.65e+05	8.45e+03	0.05	5.22	3.93	160	109	0.68			1.1	
Tank 5 - (low load)	N/A	2.49e+05	3.19e+04	0.13	5.40	4.50	160	109	0.68			1.7	
Tank 2 - (high load)	N/A	2.32e+05	2.71e+06	11.7	5.37	6.43	160	104	0.65			1.6	
Tank 4 - (high load)	N/A	1.45e+05	1.84e+05	1.3	5.16	5.27	160	104	0.65			1.0	
Tank 5 - (high load)	N/A	2.15e+05	2.21e+05	1.0	5.33	5.35	160	104	0.65			1.5	
DoD Facility 1 (averg. of 5 tests)	N/A	1.03e+06	5.28e+05	0.70	5.88	5.72	160	105	0.66	21.0	7.1	5.2	0.73
DoD Facility 2 (averg. of 3 tests)	N/A	2.82e+06	1.16e+05	0.04	6.45	5.06	160	115	0.72	26.8	9.1	7.4	0.81

* Test reports are referenced in Section 5.5.
** Scrub. - Scrubber (various types), PB - Polymer Balls, FS - Fume Suppressant, ME - Mist Eliminator, HEPA - HEPA Filter

Table 5-2 compares several MFFRST-predicted data versus actual data, where actual data were available. Specifically:

- Plating bath concentrations (grams/liter) of chromium (columns 8 through 10)
- Tank exhaust rate in thousand cubic feet per minute (cfm) (column 12 through 14)
- Rates of emission (milligrams/day) for both controlled and uncontrolled emissions (columns 3 through 5)

The top section of Table 5-2 is for controlled emissions (the method of control being shown in column 2). The bottom section is for uncontrolled emissions.

5.1.2.1. *Model Input Data*

MFFRST input data for a hard chromium electroplating tank include the current density, tank surface area, chromium concentration, and cathode efficiency. For those tests presented in Table 5-2, some of the tests gave data for chromium concentration and for tank surface area. None of the tests gave data for current density or for cathode efficiency. Where data were not supplied, MFFRST used default data, which are:

- Current density equal to 1.5 amps/in^2
- Tank surface area of 20 ft^2
- Electroplating bath chromium concentration of 160 g/l
- Cathode efficiency of 15%

Tank surface area (which is essentially determined by the size of the articles being electroplated) is used in MFFRST to calculate the rate of emission (in cfm). For those tests where the surface area was given (essentially all tests), MFFRST calculated the predicted ventilation rate. Those predicted rates were compared to the actual rates (columns 12 and 13, respectively, in Table 5-2). The ratio of the two rates was calculated in column 14, showing that, on average, for those tests with emission controls, the actual emission volumes were only 43% of those predicted by MFFRST. If these test data are representative, it would mean that MFFRST overpredicts emissions by a factor of about 2.3 (the inverse of 0.43), since MFFRST calculates emissions as directly proportional to ventilation rate.

Two uncontrolled emissions test supplied data for surface area and ventilation rate. In those cases, the actual ventilation rates were 73% and 81% of the predicted rate.

MFFRST-predicted (i.e., default) electroplating bath concentrations were compared with actual test concentrations (columns 8 and 9 respectively). The ratio of the actual versus predicted concentrations is calculated in column 10, showing that on the average for those tests with emission controls, the actual chromium concentration were about 80% of those predicted by MFFRST. This too would suggest that MFFRST slightly overpredicts emissions by a factor of about 1.25, since MFFRST calculates emissions as directly proportional to bath concentration.

Two uncontrolled emissions test supplied plating bath concentration. (Actually, all three uncontrolled emissions tests supplied bath concentration data, but the set from Hawker Pacific is the same as for their controlled emissions data.) Those data showed actual bath concentrations of 66% and 72% of MFFRST predicted data.

5.1.2.2. *Model Output Data*

After supplying the input data (and/or using the model defaults), as described above, MFFRST predicts (i.e., calculates) emissions in units of mass per day. Uncontrolled emissions are predicted as well as emissions that are controlled with a variety of air pollution control devices. Table 5-2 compares these predicted emissions to actual emissions in columns 3 and 4 respectively. Ten complete sets of predicted versus actual controlled emissions data are available. The ratio of actual to predicted emissions is given in column 5. The ratios range from 0.082 to 17.8. The average of all the ratios is 5.7, suggesting that the model underpredicts emissions by a factor of less than 6. This underprediction is not even one order of magnitude. It should be noted that the set of controlled emissions data from Hawker Pacific has only “less than” values for the actual controlled emissions. The “less than” values are caused by limited analytical sensitivity. These “less than” values have been used as though they did not have the “less than” symbol.

Uncontrolled emission data from Hawker Pacific (bottom of Table 5-2) are difficult to evaluate because various current densities were used in the three low-load tests used, but these loads were not stated. Likewise, three different current densities were used in the high-load tests, and again were not stated. To determine emissions, MFFRST could only use the one default current density input value of 1.5 amp/in^2 (for all 6 tests), which of course results in only one predicted output value. (Actually, the predicted output values do vary slightly because slightly different input ventilation rates and plating bath chromium concentrations are given for each of the tests. These ventilation and concentration values have been plugged into the model.)

For the DoD uncontrolled emissions data, the ratio of actual to predicted emissions is 0.70 for one set and 0.04 for the second set. This represents an average overprediction of about 2.7.

Theoretically, it should be much easier to predict uncontrolled emission using MFFRST as opposed to controlled emissions. This is because there are almost an infinite number of air pollution control scrubber and mist eliminator designs, as well as infinite combinations of air pollution control devices and combinations of devices. Further, there are numerous fume suppressants, and concentrations of suppressants, plus numerous sizes and distribution densities for polymer balls. To complicate matters further, there is no way of knowing the current state of maintenance of any control device. MFFRST limits its controlled emission predictions to 12 specific air pollution control devices and combination of devices, for which it assumes control efficiencies based on literature information. (However, the MFFRST user may override the 12 choices and enter any numerical control efficiency.)

5.1.2.3. *Data Correlation*

To assist in determining the ability of MFFRST to accurately predict controlled emissions, the actual versus predicted data from Table 5-2 were plotted. Because the predicted and actual data span several orders of magnitude (5.8×10^0 to 5.94×10^3 mg/day), the logarithms of the data were calculated. They are shown in columns 6 and 7 of Table 5-2 for the predicted and actual data respectively. The plot of these logarithmic data are shown on Figure 5-1. The data were subject to a regression analysis, and plotted on the same graph, as shown. The regression has a correlation coefficient of 0.79 (and an r^2 value of 0.59). As shown on Figure 5-1, the regression analysis indicates that the best-fit equation relating predicted (p) to actual (a) data is:

$$\log(p) = 1.40(\log(a)) - 1.65$$

or

$$\log(a) = 0.71(\log(p)) + 1.18$$

For reference, Figure 5-1 also contains a line showing what the plot would look like if the predicted values equaled the actual values.

The predicted controlled emissions appear to be about an order of magnitude or less below actual emissions. This difference could easily be explained by merely having an air pollution control device that is only 99.5 percent efficient instead of one that is predicted to be 99.95 percent efficient. Such a drop in efficiency might be the result of less than optimum operating and/or maintenance practices. Or, the difference might be a result of not having the myriad combinations and permutations of control devices available in MFFRST.

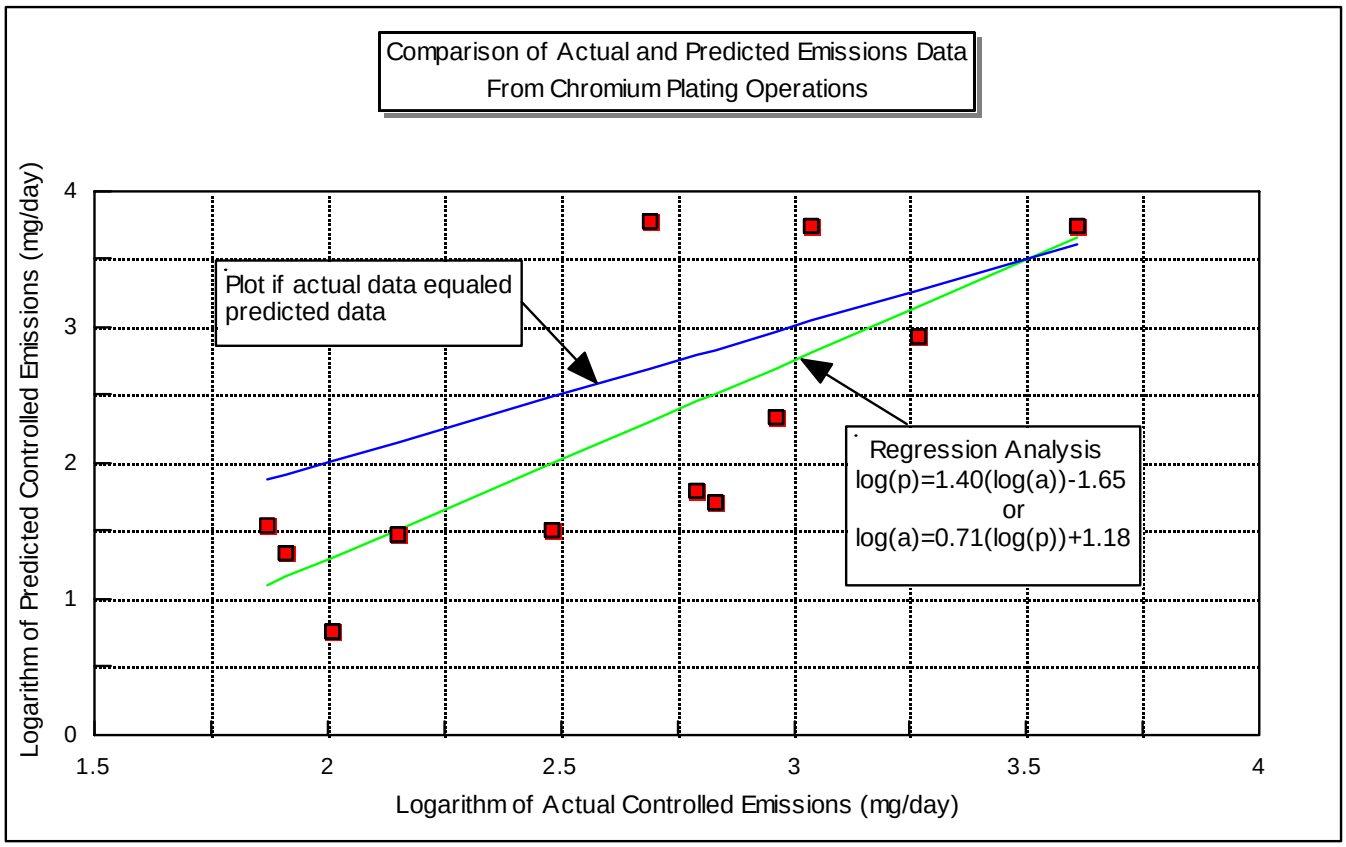

Figure 5-1. Comparison of Actual and Predicted Emissions Data from Chromium Plating Operations

5.1.3. Comparison of MFFRST Predicted Air Concentration to Published Monitoring Data

It might be fair to conclude that hexavalent chromium is the constituent of most concern with regard to potential human health impacts for the metal finishing industry. Before relying on any human health risk assessment model such as MFFRST, however, it is always desirable to develop some confidence in the predictive capabilities of the model. All inhalation health risk assessments are driven by the air concentration to which individuals are exposed. It is always preferable to use appropriate measured air concentrations rather than modeled air concentrations to conduct inhalation risk assessments. MFFRST does allow users to directly input an air concentration for this purpose. Lacking an appropriate air concentration, however, one needs to be predicted. That is a principal function of MFFRST - to predict both indoor and ambient air concentrations of metal finishing facility constituents in order to assess inhalation exposures and potential health impacts to workers and nearby residents. The models used to predict air concentrations are described in Chapter 2 of this document.

A full set of data that is directly amenable to "model validation" could not be found for current purposes. Such data would include a comprehensive description of the industrial process that could be duplicated within the confines of the MFFRST. Specifically, what is needed is the configuration and description of all the chromium finishing tanks within the shop, the ventilation rate within the plating shop, pollution control technologies in place, and concentrations of chemicals in the plating baths. This information would be needed to set up the models to estimate chromium emissions within the facility and then out of the stack, and also to estimate average concentrations within the plating shop. Then, information on the location and condition of ambient air sampling would be needed to validate the model's predicted air concentrations at nearby residences. A specific site with all this detail could not be found. The Chrome Crankshaft site reported by RTI (1988) comes close in that it does present ambient air concentrations, and does provide estimates of actual releases (not on dates concurrent with the ambient air measurements) that can be used to evaluate the ambient air dispersion model component of MFFRST. However, it does not provide sufficient details on the specific electroplating processes in-place to generate reliable site-specific estimates of releases using the tank emissions model of MFFRST.

Instead, predictions of air concentrations of hexavalent chromium for the generic decorative and hard chrome plating lines are compared with representative hexavalent chromium data taken from Section 6.2 on workplace and ambient air concentration measurements. These articles provide air concentration data which can be used to make a preliminary "ground truth" validation of the predictive capabilities of MFFRST. If the model predicts hexavalent chromium concentrations that are orders of magnitude either higher or lower than measured, then there might be reason to be

concerned that there is something fundamentally wrong with the model - either that the coding was incorrect or that the procedures for predicting air concentrations were incorrect. Predicted concentrations within the range of observed concentrations would provide some confidence in the reasonableness of the predictive capabilities of MFFRST.

Table 5-3 displays the worker exposure concentrations of hexavalent chromium predicted by MFFRST for the hard chrome and decorative chrome generic lines. Information in prior chapters provides the key assumptions and default parameter values used to generate these predicted air concentrations. Chapter 2 describes the construction of the generic plating lines and the models used to predict the uncontrolled and controlled emission rates of hexavalent chromium. Chapter 3 describes the fate models used to predict air concentrations within the workplace. Chapters 1 and 4 describe the other key assumptions for exposure such as the procedures to distinguish between "plating workers" and "non-plating workers", and other key factors.

Table 5-3. Summary of Predicted Hexavalent Chromium Worker Exposure Concentrations for the Decorative and Hard Chrome Plating Lines

Concentration, ：g/m^3	**Description**	
19.0	Process Worker	Hard Chrome Generic Line, all defaults.
5.51	Non-Process Worker	
8.34	Process Worker	Decorative Chrome Generic Line, all defaults.
3.76	Non-Process Worker	

As seen in Table 5-3, the predicted air concentrations for the "process worker" and "non-process" worker were 59.2 and 5.51 ：g/m^3 for the hard chromium generic plating line, and 24.1 and 3.76 ：g/m^3 for the decorative line, respectively. The principal difference between the two types of workers was that the "process worker" was assumed to be exposed a small percentage of the time to very high concentrations of fugitive emissions from the baths into the workplace, while most of the time they would be exposed to average air concentrations within the workplace. This fraction of time was preset to 0.01 (1% of the time). The "non-process" worker was assumed to be exposed to the average air concentrations only. The second critical model parameter was the fraction of total emissions that were assumed to be released into the open workplace environment. The default value for this parameter was 0.01 (1%). The concentrations of hexavalent chromium in these fugitive emissions above the electroplating baths were 5,400 ：g/m^3 for the hard chrome generic line and 3,700 ：g/m^3 for the decorative chrome line.

The MFFRST predictions of workplace air concentrations (using all default parameter values) may be conservative in comparison to observations -- if it is reasonable to conclude from the observations that chromium concentrations reported in the literature were in the low digits to tenths of ：g/m^3 range, with some measurements in the tens to even hundreds of ：g/m^3. As was discussed earlier, however, the articles found containing workplace concentrations of hexavalent chromium were for plating facilities in Taiwan. For purposes here, it may be acceptable to assume that they are a reasonable representation of United States workplace hexavalent chromium concentrations in chrome plating facilities.

An important finding discussed in Section 6.2.1 is that concentrations near plating baths and in the breathing zone of plating workers are likely to be higher than in other sections of plating facilities. MFFRST does have the framework to be able to capture differences in concentrations to which process and non-process workers are exposed. Some of the available monitoring data suggest that air concentrations to which workers who typically work near tanks may be exposed are higher than might be predicted by MFFRST.

As noted previously, the data most amenable to model validation of ambient outdoor air impacts to residences near facilities come from RTI (1988). In this study, hexavalent and total chromium air levels were measured at four locations within 1 km of an operating chromium plating facility during October 1987. For the immediate downwind direction at 300 meters, airborne hexavalent chromium was measured at 0.026, 0.033, 0.110, and 0.316 ：g/m^3. Further downwind at about 800 meters, RTI (1988) reported measurements of 0.004, 0.008, ND (<0.0005), and 0.014 ：g/m^3.

During October of the previous year, testing of the inlet and outlet of one of the four scrubbers at the facility was conducted and uncontrolled and controlled emissions of hexavalent chromium were reported. Stack gas temperature (65°F), stack exit gas velocity (27 ft/sec), and flue diameter (2.9 ft) were also reported. Assuming that the emission rate and stack parameters reported for this scrubber are representative of the other three scrubbers, MFFRST was run using these stack parameters and a controlled emission rate four times that of the one reported scrubber. The predicted concentrations at 300 meters and 800 meters are 0.039 ：g/m^3 and 0.010 ：g/m^3, respectively. These predicted values fall within the range of the measured ambient air concentrations.

SCREEN3 is actually designed to predict 1-hr maximum downwind concentrations. For its application in MFFRST, the 1-hr maximum predictions are multiplied by a “conversion factor” of 0.08 which converts 1-hr maximum concentrations to estimated annual average maximum

concentrations. Therefore, the prediction of 0.039 ：g/m^3 actually translates to a maximum 1-hr prediction of 0.488 ：g/m^3, which is close to the high measured concentration of 0.316 ：g/m^3 collected over a 6-hour period (not exactly a 1-hr maximum).

Data on ambient background hexavalent chromium levels suggest concentrations between 0.001 and 0.010 ：g/m^3, much less than these impacted air samples at 0.100 ：g/m^3 and higher. Ambient air monitoring in California conducted by the California Air Resources Board (CARB, 1999) in areas not near industrial air sources shows airborne hexavalent chromium levels to be very low, in the range of 0.00011 to 0.00027 ：g/m^3. However, one would expect higher average annual air concentrations near plating facilities.

In summary, the available air monitoring data suggest that annual average concentrations of hexavalent chromium near plating facilities (in the range of hundreds of meters) might range from <0.010 ：g/m^3 found in ambient background conditions to >0.100 ：g/m^3 found in downwind conditions from an operating chrome plating facility. If these generalizations are reasonable, than the MFFRST prediction of 0.039 ：g/m^3 as the annual average maximum concentration 300 meters from an operating facility might also be considered reasonable.

As has been stated, true validation of the air concentration prediction algorithms of MFFRST requires complete site-specific data for the specific facility being modeled. The “ground truthing” exercises presented here lend some degree of validity to the predictive capabilities of MFFRST in both workplace and ambient outdoor environments. Users of MFFRST are, nonetheless, encouraged to conduct model testing exercises to gain confidence their use of the model.

5.2. DEMONSTRATION OF METHODOLOGIES AND RESULTS USING TRI AND THE GENERIC LINE OPTIONS

The purpose of this section is to briefly demonstrate, through a series of examples, the capabilities of MFFRST for evaluating the potential exposures and risks to workers and nearby residents.

5.2.1. Estimating Potential Health Risks Using TRI Facility-specific Emissions Data

This section presents example inputs and the resulting predicted exposures and risks for four (4) metal-finishing plants whose emissions are profiled in TRI and within MFFRST. These four facilities were selected as examples because they demonstrate the range in both chemical types and amounts emitted from metal finishing facilities. Although it is not possible to determine from the TRI and AIRS/AFS databases what specific processes are operative at any of these facilities, three

of the four emit chromium compounds. None of the selected facilities have reported TCE emissions to TRI. Although numerous facilities have reported emissions of TCE in TRI, the example facilities were selected because the emit more than one chemical with either an RfC/RfD or cancer slope factor; TCE currently does not have an RfC/RfD or cancer slope factor reported in EPA's IRIS.

Stack Parameters - Earlier in this document, Table 3-2 summarized median values used as default values for stack parameters required for the air dispersion model in MFFRST (i.e., stack height, stack exit gas velocity, stack diameter, and stack exit temperature). These default values were chosen based on an analysis of between 623 and 894 site-specific metal finishing plant values from EPA's AIRS/AFS database. Table 5-4 presents the stack parameter values used in the example model runs for the four facilities. Facility-specific stack parameter data were not available in AIRS/AFS for two of the four facilities (Silvex, Inc. and Crown City Plating) and, therefore, default stack parameter values were used. Facility-specific stack parameter data were available in AIRS/AFS for most parameters for the two other facilities. MFFRST will automatically use the AIRS/AFS values unless the user edits the values. [The only MFFRST default values uniformly used in all analyses shown in Table 5-1 are: (1) ambient temperature and (2) downwash (yes or no).]

Table 5-4. Stack Parameters for Four Metal-Finishing Plants Featured in TRI

Stack Parameter Input Assumptions	Silvex, Inc. Cumberland County Westbrook, ME	TN Electroplating Lauderdale County Ripley, TN	Plastene Supply Co. New Madrid County Portageville, MO	Crown City Plating Co. Los Angeles County El Monte, CA
Default or Specified Parameters?	Default	Reported in AIRS/AFS	Reported in AIRS/AFS	Default
Stack Height	25 ft	10 ft	18 ft.	25 ft
Stack Exit Gas Velocity	35 ft/sec	35 ft/sec (default)	5 ft/sec[a] (low end of default range)	35 ft/sec
Stack Diameter	1.5 ft	1.3 ft.	2 ft.	1.5 ft
Ambient Temp	70 F	70 F	70 F	70 F
Stack Exit Temp	80.6 F	78 F	420 F	80.6
Downwash?	No	No	No	No

[a] Stack exit gas velocity reported in AIRS/AFS was 0.8 ft/sec. MFFRST requires a minimum velocity of 5 ft/sec.

Exposure Parameters - All of the default residential exposure parameter values in MFFRST were used for these four examples (see Table 5-5). The sources and rationale for these default values have been discussed elsewhere in this document (see Chapter 4).

Table 5-5. Residential Exposure Receptor-Related Default Inputs

Adult Receptor-Related Inputs	MFFRST Default Values
Surrounding Land Use	Urban
Distance to Residence	100 m
Meteorological Classification	Full
Terrain Height	0 m
Years Exposed	30
Days Exposed per Year	350
Average Hours Exposed per Day	16
Inhalation Rate	1.25 m^3/hour
Body Weight	70 kg

Results -- Based on the pounds of chemicals reported to be emitted in 1997 (see Table 5-6 for reported TRI emissions) and the various stack parameter values and default assumptions concerning meteorology, the maximum annual average ambient air concentrations predicted by MFFRST at a distance of 100 meters from each of the four metal finishing plants are presented in Table 5-7. (These estimated concentrations are presented on the MFFRST Results Screen 1.) Based on these estimated ambient air concentrations, toxicity information for each chemical, and the default exposure assumptions, the non-cancer risks estimated by MFFRST for potential residential receptors located 100 meters from each of the four metal finishing plants are presented in Table 5-8. (These estimated risks are presented on the MFFRST Results Screen 2.) Based on the estimated ambient air concentrations, toxicity information for each chemical, and the default exposure assumptions, the cancer risks estimated by MFFRST for potential residential receptors located 100 meters from each of the four metal finishing plants are presented in Table 5-9. (These estimated risks are presented on the MFFRST Results Screen 3.)

The non-cancer health risks presented in Table 5-8 are characterized in terms of hazard quotients (HQs) and hazard indices (HIs). An HQ is the ratio of the predicted air concentration for a chemical to its Reference Concentration (RfC). The HI is the sum of the HQs for each chemical included in the risk characterization. If the HQ for a chemical equals or exceeds 1.00, then a situation of potential health concern exists. Similarly, an HI greater than or equal to 1.00 may indicate concern for health impacts. Referring to Table 5-8, the HIs for three of the four facilities exceed 1.00, indicating potential for health impacts for receptors who live for 30 years at the point of highest maximum annual average concentration at a distance of 100 meters from the facilities.

Table 5-6. 1997 TRI Emission Profiles for Four Metal Finishing Plants (lbs/yr)

Chemicals Emitted (lbs/yr)	Silvex, Inc. Westbrook ME	TN Electoplating Ripley, TN	Plastene Supply Co. Portageville, MO	Crown City Plating Co., El Monte, CA
Chromium compounds	5.0 E+02	1.0 E+01	1.0 E+01	--
Copper compounds	5.0 E+02	1.0 E+01	1.0 E+01	4.0 E+00
Cyanide compounds	5.0 E+02	---	---	---
Ethylbenzene	—	8.35 E+03	---	---
Formaldehyde	---	3.35 E+03	1.0 E+03	5.0 E+00
Methanol	---		1.6 E+05	2.0 E+00
Methyl Ethyl Ketone	---	2.08 E+05	1.0 E+03	1.36 E+04
Methyl Isobutyl Ketone	---	---	9.56 E+04	---
Nickel compounds	5.0 E+02	1.0 E+01	1.0 E+01	6.0 E+00
Nitric acid	5.0 E+02	5.70 E+02	5.0 E+02	1.75 E+03
Toluene	---	4.46 E+04	2.31 E+05	---
Xylene (mixed isomers)	---	1.11 E+05	---	---
Zinc compounds	5.0	---	---	---

Table 5-7. Ambient Air Concentrations (mg/m^3) Predicted by MFFRST for Four Metal Finishing Plants

Air Concentrations Calculated by MFFRST (mg/m^3)	Silvex, Inc. Westbrook, ME	TN Electoplating Ripley, TN	Plastene Supply Co. Portageville, MO	Crown City Plating Co., El Monte, CA
Chromium compounds	2.54 E-04	1.14 E-05	6.63 E-06	---
Copper compounds	2.54 E-04	1.14 E-05	6.63 E-06	2.03 E-06
Cyanide compounds	2.54 E-04	---	---	---
Ethylbenzene	---	9.52 E-03	---	---
Formaldehyde	---	3.82 E-03	6.63 E-04	2.54 E-06
Methanol	---	---	1.06 E-01	1.02 E-06
Methyl Ethyl Ketone	---	2.37 E-01	6.63 E-04	6.92 E-03
Methyl Isobutyl Ketone	---	---	6.34 E-02	---
Nickel compounds	2.54 E-04	1.14 E-05	6.63 E-06	3.05 E-06
Nitric acid	2.54 E-04	6.50 E-04	3.32 E-04	8.90 E-04
Toluene	---	5.09 E-02	1.53 E-01	---
Xylene (mixed isomers)	---	1.27 E-01	---	---
Zinc compounds	2.54 E-06	---	---	---

Table 5-8. Non-Cancer Health Risk for Residential Receptors Estimated by MFFRST for Reported TRI Emissions from Four Metal Finishing Plants

Facility	Chemical	Air Concentration (mg/m^3)	Non Cancer Toxicity Endpoint (RfC - mg/m^3)	Hazard Quotients and Hazard Index
Silvex, Inc., Westbrook ME	Chromium compounds	2.54 E-04	8.00 E-06	3.05 E+01
	Cyanide compounds	2.54 E-04	7.00 E-02	3.48 E-03
				HI = 3.05 E+01
TN Electoplating Ripley, TN	Chromium compounds	1.14 E-05	8.00 E-06	1.37 E+00
	Ethylbenzene	9.52 E-03	1.00 E+00	9.13 E-03
	MEK	2.37 E-01	1.00 E+00	2.28 E-01
	Toluene	5.09 E-02	4.00 E-01	1.22 E-01
	Xylenes (mixed)	1.27 E-01	7.00 E+00	1.74 E-02
				HI = 1.74 E+00
Plastene Supply Co. Portageville, MO	Chromium compounds	6.63 E-06	8.00 E-06	7.95 E-01
	Methanol	1.06 E-01	1.75 E+00	5.83 E-02
	MEK	6.63 E-04	1.00 E+00	6.36 E-04
	Methyl isobutyl ketone	6.34 E-02	8.00 E-02	7.61 E-01
	Toluene	1.53 E-01	4.00 E-01	3.67 E-01
				HI = 1.98 E+00
Crown City Plating Co., El Monte, CA	MEK	6.92 E-03	1.00 E+00	6.63 E-03
	Methanol	1.02 E-06	1.75 E+00	5.57 E-07
				HI = 6.63 E-03

Table 5-9. Estimates of Cancer Health Risk for Residential Receptors Estimated by MFFRST for Reported TRI Emissions from Four Metal Finishing Plants

Facility	Chemical	Air Concentration (mg/m^3)	Unit Risk Value (m^3/mg)	Cancer Risk
Silvex, Inc., Westbrook ME	Chromium compounds	2.54 E-04	1.20 E+01	1.25 E-03
TN Electoplating Ripley, TN	Chromium compounds	1.14 E -05	1.20 E+01	5.63 E-05
	Formaldehyde	3.82 E -03	1.3 E -02	2.04 E-05
				Total = 7.67 E-05
Plastene Supply Co. Portageville, MO	Chromium compounds	6.63 E-06	1.2 E+01	3.27 E-05
	Formaldehyde	6.63 E-04	1.3 E-02	3.54 E-06
				Total = 3.63 E-05
Crown City Plating Co., El Monte, CA	Formaldehyde	2.54 E-06	1.30 E-02	1.36 E-08

The HIs for the first two facilities, 3.05E+01 and 1.74E+00, are due almost entirely to chromium compounds released by the facilities (which are conservatively assumed by this analysis to be comprised entirely of hexavalent chromium). The HI for the third facility, 1.98E+00, is above 1.00 even though no individual chemical had an HQ greater than 1.00. For this facility, the chemicals contributing the most to the HI are chromium compounds, methyl isobutyl ketone, and toluene.

The cancer health risks presented in Table 5-9 are characterized as the probability of increased cancer risk over a lifetime. Cancer risks are calculated separately for each carcinogenic chemical and the individual chemical risks are then summed to generate a total risk for the facility. If the predicted cancer risk is greater than 1.00E-04, then a more detailed risk assessment may be warranted using site-specific information concerning locations and activity patterns of potential receptors. Referring to Table 5-9, the total predicted facility risks exceeded 1.00E-04 for one facility and the predicted risk for that facility was due entirely to chromium compounds which are conservatively assumed in MFFRST to be comprised entirely of the carcinogenic hexavalent chromium.

5.2.2. Estimating Potential Emissions and Health Risks Using MFFRST's Generic Process Line Feature

In this section, typical emissions and resulting health risks are profiled for three examples of MFFRST's "generic" process lines: hard chromium plating, decorative chromium plating, and nickel plating. MFFRST default values for tank parameters, stack parameters, and exposure parameters were used throughout to generate the outputs for three examples.

Example 1: Hard Chromium Plating - Generic Process Line - Emissions and Risks

The generic "hard chromium plating" line modeled included five tanks: 1) *alkaline cleaning*; 2) *electrocleaning*; 3) *acid etch*; and 4) *hexavalent chromium plating*. In addition, a vapor degreaser was included. MFFRST calculates both uncontrolled and controlled emission rates. MFFRST uses controlled emission rates to estimate residential risks and an assumption of one percent uncontrolled emissions to estimate occupational non-cancer and cancer risks. The estimated chemical emission rates for this generic facility are presented in Table 5-10. The non-cancer and cancer health risks for the worker and residential receptors are presented in Table 5-11. MFFRST predicts relatively insignificant non-cancer (HI = 9.54E-04) and cancer risks (3.93E-08) for residential receptors. However, predicted non-cancer (HI >2E+02) and cancer risks (>1.3E-02) for exposed workers are significant and are attributed entirely to predicted emissions of hexavalent chromium.

Example 2: Decorative Chromium Plating - Generic Process Line - Emissions and Risks

The generic line modeled considered eight tanks: 1) *alkaline cleaner*; 2) *electrocleaning*; 3) *acid etching #1*; 4) *copper strike*; 5) *copper plating*; 6) *acid etching #2*; 7) *nickel plating*; and 8) *hexavalent chromium plating*. The estimated chemical emission rates for this generic facility are presented in Table 5-12. The non-cancer health risks for the worker and residential receptors are presented in Table 5-13. MFFRST predicts relatively insignificant non-cancer (6.52E-04) and cancer risks (2.68E-08) for residential receptors. However, predicted non-cancer (HI >1.6E+02) and cancer risks (>8.8E-03) for exposed workers are significant and are attributed primarily to predicted emissions of hexavalent chromium.

Table 5-10. MFFRST Estimated Chemical Emission Rates from a Generic Hard Chromium Plating Line

Chemicals Emitted from Generic Hard Chromium Plating Process	Estimated Emission Rates (mg/day)[a]				
	Vapor Degreasing w/ Trichloroethylene (mg/day)	Alkaline Cleaner (mg/day)	Electrocleaning (mg/day)	Acid Etching (mg/day)	Hexavalent Chromium Plating (mg/day)
Trichloroethylene	1.88E+07 (1.88 E+07)	---	---	---	---
Sodium Phosphate	---	7.98 E+03 (1.65 E+02)	5.61 E+03 (1.16 E+02)	---	---
Sodium Metasilicate	—	1.33 E+04 (2.75 E+02)	9.36 E+03 (1.93 E+02)	---	---
Sodium Hydroxide	---	4.25E+04 (8.79 E+02)	2.99 E+04 (6.19 E+02)	---	---
Sulfuric Acid	---	---	---	1.71 E+05 (7.30 E+03)	2.34 E+04 (3.04 E-01)
Hexavalent Chromium		---	---	---	1.50 E+06 (1.95 E+01)

[a] Values in parentheses are emission rates assuming use of default pollution control technologies. Values not in parentheses are uncontrolled emission rates.

Table 5-11. MFFRST Estimated Non-Cancer and Cancer Risks from Hard Chromium Plating Process Line Exposure

Risks from Generic Hard Chromium Process	Occupational - Process Worker	Occupational Non-process Worker	Residential - Adult
Non Cancer Hazard Index[a]	8.11 E+02	2.36 E+02	9.54 E-04
Cancer Risk[a]	3.34 E-02	1.29 E-02	3.93 E-08

[a] All of the cancer and non-cancer risks are attributed to releases of hexavalent chromium.

Table 5-12. MFFRST Estimated Emission Rates from a Generic Decorative Chromium Plating Line

Chemicals Emitted from Decorative Chromium Plating Line	Estimated Emission Rates (mg/day)[a]							
	Alkaline Cleaner (mg/day)	Electro-cleaning (mg/day)	Acid Etching (mg/day)	Copper Strike (mg/day)	Copper Plating (mg/day)	Acid Etching #2 (mg/day)	Nickel Plating (mg/day)	Hexavalent Chromium Plating (mg/day)
Sodium Phosphate	7.98 E+03 (1.65 E+02)	5.61 E+03 (1.16 E+02)	---	---	---	---	---	---
Sodium Hydroxide compounds	4.25 E+04 (8.79 E+02)	2.99 E+04 (6.19 E+02)	---	---	---	---	---	---
Sodium Metasilicate	1.33 E+04 (2.75 E+02)	9.36 E+03 (1.93 E+02)	---	---	---	---	---	---
Sulfuric Acid	---	---	1.71E+05 (7.30 E+03)	---	---	1.71 E+05 (7.3 E+03)	---	9.98 E+03 (1.30 E-01)
Copper	---	---	---	2.04 E+03 (9.13 E+00)	2.81 E+03 (1.25 E+01)	---	---	---
Cyanide	---	---	---	2.95E+03 (1.32 E+01)	4.21 E+03 (1.88 E+01)	---	---	---
Nickel	---	---	---	---	---	---	1.96 E+04 (8.74 E+02)	---
Boric Acid	---	---	---	---	---	---	9.65 E+03 (4.31 E+01)	---
Hexavalent Chromium	---	---	---	---	---	---	---	1.02 E+06 (1.33 E+01)

[a] Values in parentheses are emission rates assuming use of default pollution control technologies. Values not in parentheses are uncontrolled emission rates.

Table 5-13. MFFRST Estimated Non-Cancer and Cancer Risks from Decorative Chromium Plating Process Line Exposure

Risks from Generic Decorative Chromium Plating Line Process	Occupational - Process Worker	Occupational Non-process Worker	Residential - Adult
Non Cancer Hazard Index[a]	3.57 E+02	1.61 E+02	6.52 E-04
Cancer Risk[a]	1.47 E-02	8.84 E-03	2.68 E-08

[a] All of the cancer risks and most of the non-cancer risks are attributed to releases of hexavalent chromium.

Example 3: Nickel Plating - Generic Process Line - Emissions and Risks

The generic line modeled considered four tanks: 1) *alkaline cleaning*; 2) *electrocleaning*; 3) *acid etch*; and 4) *nickel plating*. The estimated chemical emission rates for this generic facility are presented in Table 5-14. EPA has not evaluated the chemicals emitted by nickel plating process for potential human carcinogenicity or chronic effects via inhalation. Therefore, cancer and non-cancer risks are not calculated by MFFRST. However, MFFRST does compare the predicted workplace and ambient air concentrations to various benchmark values (e.g., ATSDR MRLs, OSHA PELs, ACGIH TLVs, and NIOSH RELs). The predicted concentrations are at least one order of magnitude lower than the benchmarks that have been established for three of the chemicals (nickel, sodium hydroxide, and sulfuric acid).

Table 5-14. MFFRST Estimated Emission Rates from a Generic Nickel Plating Line

Chemicals Emitted from Nickel Plating	Estimated Emission Rates (mg/day)[a]			
	Alkaline Cleaner (mg/day)	Electro-cleaning (mg/day)	Acid Etching (mg/day)	Nickel Plating (mg/day)
Sodium Phosphate	7.98 E+03 (1.65 E+02)	5.61 E+03 (1.16 E+02)	---	---
Sodium Hydroxide	4.25 E+04 (8.79 E+02)	2.99 E+04 (6.19 E+02)	---	---
Sodium Metasilicate	1.33 E+04 (2.75 E+02)	9.36 E+03 (1.93 E+02)	---	---
Sulfuric Acid	---	---	1.71E+05 (7.30 E+03)	---
Nickel	---	---	---	1.96 E+04 (8.74 E+01)
Boric Acid	---	---	---	9.65 E+03 (4.31 E+01)

[a] Values in parentheses are emission rates assuming use of default pollution control technologies. Values not in parentheses are uncontrolled emission rates.

5.3. SENSITIVITY ANALYSIS

The purpose of this section is to examine the relative impact of the various MFFRST input parameters on the outputs calculated by the model (i.e., emission rates, ambient air concentrations, and health risks). Tables 5-15, 5-16, and 5-17 summarize the relative impacts of the major categories of input parameters on the model outputs for the three population groups (i.e., nearby residents, process workers, and non-process workers). Four "effect descriptors" are used in these tables to describe the impact of increasing the value of a given input parameter: directly proportional, inversely proportional, non-linear increase, and non-linear decrease.

For purposes of these tables, *directly proportional* describes the situation where an action on the input parameter results in an identical action on the output (e.g., increasing the input parameter value by a factor of 3 causes the emission rate to increase by a factor of 3). *Inversely proportional* describes the situation where an action on the input parameter results in the inverse action on the output (e.g., increasing the input parameter value by a factor of 2 causes the emission rate to be reduced by a factor of 2). *Non-linear increase* describes the situation where an action on the input results in a similar action on the output (i.e., if the input parameter increases, the output increases) but not in a directly proportional manner (e.g., increasing the bubble radius in a non-electrolytic tank by a factor of 2 causes the ambient air concentration to increase by a factor of only 1.62). *Non-linear decrease* describes the situation where an action on the input results in an inverse action on the output (i.e., if the input parameter increases, the output decreases) but not in an inversely proportional manner (e.g., increasing the facility stack height by 50 percent causes the ambient air concentration to decrease by a factor of 18 percent).

The parameters characterized as *directly proportional* and *inversely proportional* generally have the most significant impacts. The parameters characterized as *non-linear increase* and *non-linear decrease* have less impact because their impact is generally less than linear (i.e., an increase in the parameter value by a factor of two causes the output to increase or decrease by less than a factor of two).

The major categories of input parameters are: electrolytic tank parameters, non-electrolytic tank parameters, facility stack parameters, meteorological and terrain parameters, exposure parameters, and hazard benchmarks. The impacts of each of these categories is examined in the following subsections.

Table 5-15. Typical Effects of Increasing MFFRST Parameter Values on Emission Rates, Ambient Air Concentrations, and Health Risks for Residents

Parameter	Default Value	Default Units	Range of Alternative Values[a]	Effect of Increasing the Parameter Values on Results		
				Emission Rate	Ambient Air Conc.	Health Risk
Electrolytic Tank Parameters						
Surface area	8 to 20	sq ft	4 to 50	directly proportional	directly proportional	directly proportional
Chemical concentration in tank	varies(1)	g/L	varies(1)	directly proportional	directly proportional	directly proportional
Current density	0.06 to 3	A/sq in	0.06 to 3	directly proportional	directly proportional	directly proportional
Cathode efficiency	15 to >90	%	15 to 100	inversely proportional	inversely proportional	inversely proportional
Non-Electrolytic Tank Parameters						
Surface area	8 to 20	sq ft	4 to 50	directly proportional	directly proportional	directly proportional
Average bubble radius	0.05	inches	0.05 to 0.5	non-linear increase	non-linear increase	non-linear increase
Surface tension	40 to 70	dynes/cm	20 to 80	non-linear increase	non-linear increase	non-linear increase
Aeration volume	10	cfm/sq ft	1 to 40	directly proportional	directly proportional	directly proportional
Chemical concentration in tank	varies(1)	g/L	varies(1)	directly proportional	directly proportional	directly proportional
Facility Stack Parameters						
Stack height	25	ft	1 to 30	---	non-linear decrease	non-linear decrease
Inside stack diameter	1.5	ft	0.1 to 50	---	non-linear decrease	non-linear decrease
Stack gas exit velocity	35	ft/sec	5 to 1,000	---	non-linear decrease	non-linear decrease
Stack gas temperature	80.6	degrees F	50 to 1,500	---	non-linear decrease	non-linear decrease
Ambient air temperature	70	degrees F	-20 to 110	---	non-linear increase	non-linear increase
Meteorological and Terrain Parameters						
Terrain height	0	m	0 to stack height	---	non-linear increase	non-linear increase
Distance to residence	100	m	25 to 50,000	---	non-linear decrease	non-linear decrease
Residential Exposure Parameters						
Inhalation rate	1.25 (adult)	cu m/hr	0.4 to 4.8 (adult)	---	---	directly proportional
	0.5 (child)	cu m/hr	0.3 to 3.9 (child)	---	---	directly proportional
Avg hours of exposure per day	16 (adult)	hours	1 to 24	---	---	directly proportional
	20 (child)	hours	1 to 24	---	---	directly proportional
Days exposed per year	350	days	1 to 365	---	---	directly proportional
Years of exposure	30 (adult)	years	1 to 82 (adult)	---	---	directly proportional
	5 (child)	years	1 to 16 (child)	---	---	directly proportional

Table 5-15. Typical Effects of Increasing MFFRST Parameter Values on Emission Rates, Ambient Air Concentrations, and Health Risks for Residents (continued)

Parameter	Default Value	Default Units	Range of Alternative Values[a]	Effect of Increasing the Parameter Values on Results		
				Emission Rate	Ambient Air Conc.	Health Risk
Body weight	70 (adult)	kg	47 to 105 (adult)	---	---	inversely proportional
	16 (child)	kg	14 to 60 (child)	---	---	inversely proportional
Workplace Box Model Parameters				---	---	---
Process Worker Exposure Parameters				---	---	---
Non-proc. Worker Exposure Parameters				---	---	---
Hazard Benchmarks						
Reference concentration	varies(2)	mg/cu m	varies(2)	---	---	inversely proportional
Cancer unit risk	varies(2)	cu m/mg	varies(2)	---	---	directly proportional

a The "Range of Alternative Values" are reasonable upper and lower bounds on the parameter. Many of these ranges are incorporated within the model to prevent the user from entering an unreasonable parameter value.

Notes:
A dash (---) denotes no impact associated with a change in the parameter value.
1) Chemical concentrations vary widely depending upon the type of tank and the chemical constituents being used.
2) RfCs and cancer unit risks are chemical-specific values.

Table 5-16. Typical Effects of Increasing MFFRST Parameter Values on Emission Rates, Indoor Air Concentrations, and Health Risks for Process Workers

Parameter	Default Value	Default Units	Range of Alternative Values[a]	Effect of Increasing the Parameter Values on Results		
				Emission Rate	Indoor Air Conc.	Health Risk
Electrolytic Tank Parameters						
Surface area	8 to 20	sq ft	4 to 50	directly proportional	non-linear increase	non-linear increase
Chemical concentration in tank	varies(1)	g/L	varies(1)	directly proportional	directly proportional	directly proportional
Current density	0.06 to 3	A/sq in	0.06 to 3	directly proportional	directly proportional	directly proportional
Cathode efficiency	15 to >90	%	15 to 100	inversely proportional	inversely proportional	inversely proportional
Non-Electrolytic Tank Parameters						
Surface area	8 to 20	sq ft	4 to 50	directly proportional	non-linear increase	non-linear increase
Average bubble radius	0.05	inches	0.05 to 0.5	non-linear increase	non-linear increase	non-linear increase
Surface tension	40 to 70*	dynes/cm	20 to 80	non-linear increase	non-linear increase	non-linear increase
Aeration volume	10	cfm/sq ft	1 to 40	directly proportional	non-linear increase	non-linear increase
Chemical concentration in tank	varies(1)	g/L	varies(1)	directly proportional	directly proportional	directly proportional
Facility Stack Parameters				---	---	---
Meteorological and Terrain Parameters				---	---	---
Residential Exposure Parameters				---	---	---
Workplace Box Model Parameters						
% of emissions entering workplace air	1	%	0.1 to 10	---	non-linear increase	non-linear increase
Building ventilation rate	4e+06	cu ft/hr	less than 3E+08	---	non-linear decrease	non-linear decrease
Process Worker Exposure Parameters						
Hours per day near the bath	0.08	hours	16 or less	---	---	non-linear increase
Hours per day away from bath	7.92	hours	16 or less	---	---	non-linear decrease
Inhalation rate	1.25	cu m/hr	0.4 to 4.8	---	---	directly proportional
Days exposed per year	250	days	365 or less	---	---	directly proportional
Years of exposure	30	years	47 or less	---	---	directly proportional
Body weight	70	kg	47 to 105	---	---	inversely proportional
Non-proc. Worker Exposure Parameters				---	---	---
Hazard Benchmarks						
Reference concentration	varies(2)	mg/cu m	varies(2)	---	---	inversely proportional
Cancer unit risk	varies(2)	cu m/mg	varies(2)	---	---	directly proportional

a The "Range of Alternative Values" are reasonable upper and lower bounds on the parameter. Many of these ranges are incorporated within the model to prevent the user from entering an unreasonable parameter value.

Notes:
A dash (---) denotes no impact associated with a change in the parameter value.
1) Chemical concentrations vary widely depending upon the type of tank and the chemical constituents being used.
2) RfCs and cancer unit risks are chemical-specific values.

Table 5-17. Typical Effects of Increasing MFFRST Parameter Values on Emission Rates, Ambient Air Concentrations, and Health Risks for Non-process Workers

Parameter	Default Value	Default Units	Range of Alternative Values[a]	Effect of Increasing the Parameter Values on Results		
				Emission Rate	Indoor Air Conc.	Health Risk
Electrolytic Tank Parameters						
Surface area	8 to 20	sq ft	4 to 50	directly proportional	directly proportional	directly proportional
Chemical concentration in tank	varies(1)	g/L	varies(1)	directly proportional	directly proportional	directly proportional
Current density	0.06 to 3	A/sq in	0.06 to 3	directly proportional	directly proportional	directly proportional
Cathode efficiency	15 to >90	%	15 to 100	inversely proportional	inversely proportional	inversely proportional
Non-Electrolytic Tank Parameters						
Surface area	8 to 20	sq ft	4 to 50	directly proportional	directly proportional	directly proportional
Average bubble radius	0.05	inches	0.05 to 0.5	non-linear increase	non-linear increase	non-linear increase
Surface tension	40 to 70*	dynes/cm	20 to 80	non-linear increase	non-linear increase	non-linear increase
Aeration volume	10	cfm/sq ft	1 to 40	directly proportional	directly proportional	directly proportional
Chemical concentration in tank	varies(1)	g/L	varies(1)	directly proportional	directly proportional	directly proportional
Facility Stack Parameters				---	---	---
Meteorological and Terrain Parameters				---	---	---
Residential Exposure Parameters				---	---	---
Workplace Box Model Parameters						
% of emissions entering workplace air	1	%	0.1 to 10	---	directly proportional	directly proportional
Building ventilation rate	4e+06	cu ft/hr	less than 3E+08	---	inversely proportional	inversely proportional
Process Worker Exposure Parameters				---	---	---
Non-proc. Worker Exposure Parameters						
Avg hours of exposure per day	8	hours	16 or less	---	---	directly proportional
Inhalation rate	1.25	cu m/hr	0.4 to 4.8	---	---	directly proportional
Days exposed per year	250	days	365 or less	---	---	directly proportional
Years of exposure	40	years	47 or less	---	---	directly proportional
Body weight	70	kg	47 to 105	---	---	inversely proportional
Hazard Benchmarks						
Reference concentration	varies(2)	mg/cu m	varies(2)	---	---	inversely proportional
Cancer unit risk	varies(2)	cu m/mg	varies(2)	---	---	directly proportional

a The "Range of Alternative Values" are reasonable upper and lower bounds on the parameter. Many of these ranges are incorporated within the model to prevent the user from entering an unreasonable parameter value.

Notes:
A dash (---) indicates no impact associated with a change in the parameter value.
1) Chemical concentrations vary widely depending upon the type of tank and the chemical constituents being used.
2) RfCs and cancer unit risks are chemical-specific values.

5.3.1. Impact of Electrolytic Tank Parameters

With one exception discussed in the next paragraph, the four electrolytic tank input parameters (i.e., surface area, chemical concentration in the tank, current density, and cathode efficiency) have either directly proportional or inversely proportional impacts on the outputs. It is important to note, however, that this relationship holds true only on a tank-specific basis. For example, decreasing the copper concentration by a factor of two in the copper strike bath at a decorative chrome plating facility will not result in a reduction in copper exposure and health risk by a factor of two unless the user also reduces the copper concentration in the copper plating bath by a factor of two.

The exception mentioned above is the impact of the surface area parameter on the average indoor air concentration (and resulting health risk) to which the process worker is exposed. As discussed in Section 3.3, MFFRST assumes, as a default, that the process worker spends 0.08 hours/day near the tanks at which time he/she is exposed to uncontrolled emissions from the tanks. During the other 7.92 hours of the work day, the worker is assumed to be exposed to the lower air concentrations predicted to be present in the general air of the facility. The calculation of the concentration of a chemical in the air above a tank does not involve tank surface area. The calculation of the concentration of a chemical in the general air of the facility does take into account surface area. Because the chemical concentration in the air above the tanks is generally much greater than the concentration in the general facility air, changing the tank surface area does not have a directly proportional effect on the process worker's exposure to the chemical. Table 5-18 shows this relationship for chromium at a hard chromium plating facility; increasing the surface areas of all tanks in this facility by a factor of 2 (i.e., 100 percent) resulted in only a 28 percent increase in the average air concentration to which the worker was exposed and the resulting health risks.

5.3.2. Impact of Non-Electrolytic Tank Parameters

Of the five non-electrolytic tank input parameters (i.e., surface area, chemical concentration in the tank, average bubble radius, surface tension, and aeration volume), three have directly proportional impacts on the outputs for residents and non-process workers: surface area, chemical concentration in the tank, and aeration volume. For process workers, chemical concentration in the tank has a directly proportional impact and the other two parameters (i.e., surface area and aeration volume) have a non-linear increase impact for the same reasons explained in Section 5.3.1 for surface area.

Table 5-18. Effect of Tank Surface Area on Process Worker Exposure and Health Risk at a Hard Chromium Plating Facility

Tank Surface Area (ft^2)	% Change in Surface Area from Default	Indoor Air Concentration of Cr^{+6} (mg/m^3)	% Change in Concentration from Default	Hazard Quotient (HQ)	% Change in HQ from Default	Cancer Risk	% Change in Cancer Risk from Default
Default: 20	--	1.90E-02	–	8.11E+02	–	3.34E-02	–
25	25%	2.03E-02	7	8.70E+02	7	3.58E-02	7
30	50%	2.17E-02	14	9.28E+02	14	3.82E-02	14
40	100%	2.44E-02	28	1.04E+03	28	4.30E-02	29

The bubble radius and surface tension parameters have a non-linear increase impact on emission rates, air concentrations, and health impacts for all three population types. The mathematical calculation of the emission rate is based on a complicated relationship between bubble radius and surface tension as explained in Section 2.3.2.2. Tables 5-19 and 5-20 show the effect of changing the values for bubble radius and surface tension, respectively, on MFFRST predictions of air concentrations of sulfuric acid at a silver plating facility. The impacts of changes in the surface tension (i.e., on a percent basis) appear to be larger than the impacts of changes in the bubble radius.

5.3.3. Impact of Facility Stack, Meteorological, and Terrain Parameters

The facility stack, meteorological, and terrain parameters are used in the dispersion modeling of emissions (calculated or reported in TRI) for the facility. Thus, these parameters have no impact on the facility emission rate or on process worker and non-process worker exposures and health risks. Assuming "full" meteorology and no downwash effects, two of these seven parameters (ambient air temperature and terrain height) have a non-linear increase impact on air concentrations and health risks. The other five parameters (stack height, stack diameter, stack gas exit velocity, stack gas temperature, and distance to residence) have a non-linear decrease impact on air concentrations and health risks. Because the relationships between these parameters in calculation equations used in air dispersion modeling (see Section 3.2) are quite complicated it is not possible to develop a relative importance ranking for these seven parameters that will apply in all modeling scenarios. However, as an example, Table 5-21 presents a comparison of the effects of changing individual parameter values by 50 percent and 100 percent while holding all other parameter values constant at a baseline value. The baseline values are primarily the default values or values similar to the default values in MFFRST. [The intent of the exercise in Table 5-21 is to show the relative impact of a 50 percent and 100 percent change in each parameter value. It was necessary to deviate from the default value for stack height as the "baseline" value because a 100 percent increase in the default value is outside the reasonable stack height range.]

5.3.4. Impact of Exposure Parameters

For residents and non-process workers, all exposure parameters, with the exception of body weight, have a directly proportional impact on health risk. That is, if the value of one of these parameters (average hours of exposure per day, inhalation rate, days exposed per year, and years of exposure) is doubled, then the health risk is also doubled. Body weight has an inversely proportional impact on health risk.

Table 5-19. Effect of Average Bubble Radius on Air Concentrations of Sulfuric Acid to Which Workers and Residents are Exposed at a Silver Plating Facility

Average Bubble Radius (in)	% Change in Bubble Radius from Default	Air Concentrations (mg/m^3)			% Change in Concentration from Default		
		Resident	Process Worker	Non-process Worker	Resident	Process Worker	Non-process Worker
Default: 0.05	–	2.98E-06	1.82E-03	2.69E-05	–	–	–
0.10	100%	3.32E-06	2.02E-03	2.99E-05	11%	11%	11%
0.15	200%	3.79E-06	2.31E-03	3.41E-05	27%	27%	27%
0.20	300%	4.19E-06	2.55E-03	3.77E-05	40%	40%	40%

Table 5-20. Effect of Surface Tension on Air Concentrations of Sulfuric Acid to Which Workers and Residents are Exposed at a Silver Plating Facility

Surface Tension (dynes/cm)	% Change in Surface Tension from Default	Air Concentrations (mg/m^3)			% Change in Concentration from Default		
		Resident	Process Worker	Non-process Worker	Resident	Process Worker	Non-process Worker
Default: 20	–	1.75E-06	1.06E-03	1.57E-05	–	–	–
40	100%	2.32E-06	1.41E-03	2.09E-05	33%	33%	33%
60	200%	2.78E-06	1.69E-03	2.50E-05	59%	59%	59%
80	300%	3.18E-06	1.93E-03	2.86E-05	82%	82%	82%

Table 5-21. Effect of Changing Ambient Air Dispersion Model Parameter Values on Ambient Air Concentrations of Chromium from a Hard Chrome Plating Facility

Model Parameter[a]	Baseline Value[a]	Ambient Air Conc. (mg/m^3)	Baseline Value + 50%	Ambient Air Conc. (mg/m^3)	% Change from Baseline Conc.	Baseline Value + 100%	Ambient Air Conc. (mg/m^3)	% Change from Baseline Conc.
Stack Height	10 ft	1.80E-08	15 ft	1.63E-08	-9.4%	20 ft	1.47E-08	-18.3%
Inside Stack Diameter	1 ft	1.80E-08	1.5 ft	1.26E-08	-30.0%	2 ft	9.53E-09	-47.0%
Stack Gas Exit Velocity	35 ft/sec	1.80E-08	52.5 ft/sec	1.26E-08	-30.0%	70 ft/sec	9.53E-09	-47.0%
Stack Gas Temperature	80.6°F	1.80E-08	120.9°F	1.80E-08	0%	161.2°F	1.60E-08	-11.1%
Ambient Air Temperature	50°F	1.80E-08	75°F	3.27E-08	+81.7%	100°F	3.70E-08	+105%
Terrain Height	1 m	1.80E-08	1.5 m	1.85E-08	+2.7%	2 m	1.91E-08	+6.1%
Distance to Residence	100 m	1.80E-08	150 m	1.35E-08	-25.0%	200 m	1.11E-08	-38.3%

[a] Parameter values were set at the baseline values except for the parameter being evaluated.

For process workers, the impacts of inhalation rate, days exposed per year, and years of exposure are directly proportional and the impact of body weight is inversely proportional. However, the process worker parameter "hours per day near the bath" has a non-linear increase effect on health risk. As discussed in Section 3.3, MFFRST assumes, as a default, that the process worker spends 0.08 hours/day (i.e., 1 percent of the work day) near the tanks at which time he/she is exposed to uncontrolled emissions from the tanks. During the other 7.92 hours of the work day, the worker is assumed to be exposed to the lower air concentrations predicted to be present in the general air of the facility. Because the chemical concentration in the air above the tanks is generally much greater than the concentration in the general facility air, changing the time spent near the tanks can have a major effect on the magnitude of the process worker's exposure to the chemical. Table 5-22 shows the impact of increasing the time spent near the tanks on the average 8-hour chromium air concentration to which the process worker is exposed during the course of a day. Increasing the time spent near the tank from the default of 0.08 hours per day (i.e., 4.8 minutes or 1 percent of the work day) to 0.16 hours per day (i.e., 8.6 minutes or 2 percent of the work day) increases the average air concentration by more than 65 percent

Table 5-22. Effect of Time Spent Near the Tank on Average Indoor Air Concentrations for Process Workers at Hard Chromium Plant

Hrs/day Near the Tank	% Change in Hrs Spent Near Bath	Average Cr^{+6} Concentration (mg/m^3)	% Change in Cr^{+6} Conc. from Default
Default: 0.08	–	1.90E-02	–
0.12	50%	2.57E-02	35.3%
0.16	100%	3.24E-02	70.5%
0.24	200%	4.58E-02	141%

5.3.5. Impact of Workplace Box Model Parameters

For the non-process worker, impacts of the "building ventilation rate" and "% of emissions entering workplace air" on indoor air concentrations and health risks are inversely proportional and directly proportional, respectively. For process workers, the impacts of these two parameters are non-linear decrease and non-linear increase, respectively. The reason for this difference between the two worker types is because, as discussed above in Section 5.3.1, MFFRST assumes, as a default, that the process worker spends 0.08 hours/day near the tanks at which time he/she is exposed to uncontrolled emissions from the tanks. During the other 7.92 hours of the work day, the

worker is assumed to be exposed to the lower air concentrations predicted to be present in the general air of the facility. The calculation of the concentration of a chemical in the air above a tank does not involve either the "building ventilation rate" or the "% of emissions entering workplace air." The calculation of the concentration of a chemical in the general air of the facility does involve these two parameters. Because the chemical concentration in the air above the tanks is generally much greater than the concentration in the general facility air, changing these two parameters does not have a directly or inversely proportional effect on the process worker's exposure to the chemical.

5.3.6. Impact of Hazard Benchmarks

The two benchmarks used by MFFRST to calculate risks are the Reference Concentration (RfC) and the cancer unit risk value. These two benchmarks are values derived by EPA and should not be changed by the user. The RfC has an inversely proportional impact on health risk whereas the cancer unit risk value has a directly proportional impact.

5.4. UNCERTAINTY

Despite recent advances in risk assessment methodology, uncertainties are inherent in the risk assessment process. To appreciate the limitation and significance of the screening level risk estimates generated by MFFRST, it is important to have an understanding of the sources and magnitude of uncertainty. Sources of uncertainty in MFFRST risk estimates, as in any risk assessment, include:

- Estimation of emissions;
- Chemical fate and transport;
- Toxicity data;
- Exposure assessment; and
- Risk estimates.

5.4.1. Uncertainties in Estimating Emissions

The facility-specific scenario uses publicly available air emissions data reported by metal finishing plants to the U.S. EPA as part of the 1997 TRI. To support this option in MFFRST, TRI air emissions data (both stack and fugitive emissions) were retrieved for 426 metal finishing facilities (SIC Code 3471) nationwide. TRI emissions data are used by MFFRST under this scenario to estimate residential exposures only. It is inappropriate to use TRI data for occupational exposures because they represent the emissions leaving the plant to the outdoor environment. Because TRI

emissions data are generated by the reporting facility, one can presume that the estimates are fairly reliable and accurate. However, the TRI database itself provides little detail on the methodology used by any facility to generate these estimates.

MFFRST provides default process lines for 17 electroplating shop processes. The uncertainty in using the default process lines to predict emissions from an actual electroplating shop can be significant. It is recognized that no two electroplating shops contain the same electroplating processes, nor do such shops have the same volume of work. Even if two shops perform electroplating of the same metal on the same substrate (e.g., chromium plated on steel), it is unlikely that their production lines will be the same size, have the same process tank chemistries, or have the same ventilation characteristics. In fact, an infinite number of combinations of variables are found in electroplating shops, most of which will affect emissions to the atmosphere.

For example, more atmospheric emissions can be expected from an open process tank that has the following operating parameters:

- More concentrated chemical contents;
- More turbulent mixing;
- Larger surface area;
- Larger rate of ventilation; and
- Less effective air pollution control devices.

These and other operating parameters are taken into account by MFFRST when atmospheric emissions (external to the facility) and indoor fugitive emissions are estimated. This section provides emissions data for the 17 electroplating shop process lines that were described in Section 2.2. The basis of the emissions estimates are data developed for hard chromium electroplating through a study sponsored by the U.S. EPA and industry. The hard chromium data were extrapolated to other electroplating shop operations, based on the relative values of the appropriate operating parameters.

5.4.2. Uncertainties in Chemical Fate and Transport

The procedures used by MFFRST are established methods used by EPA and other organizations to provide screening-level estimates of air concentrations that might result from metal finishing operations. Specifically, MFFRST uses the SCREEN3 model for residential scenarios and a "box model" for occupational exposure estimation. SCREEN3 is an EPA screening level system that uses a Gaussian plume model, incorporating source-related factors and meteorological

conditions to estimate the ambient pollutant concentration. However, it has two disadvantages. First, it has limited ability to include site-specific meteorological data. It predicts the maximum downwind concentration based on a range of meteorological conditions, and does not consider the direction of the wind. This means that the maximum concentration could occur under meteorological conditions that rarely, if ever, occur at the site or could be of very short duration. A second disadvantage is that SCREEN3 only calculates the maximum 1-hour concentration. For assessment of potential health impacts of long-term (i.e., chronic exposure), this value is not appropriate. Rather, a chronic health risk assessment should be based on the maximum annual concentration for a representative exposure concentration. MFFRST uses an "accepted convention" (i.e., not based on hard data) to approximate the maximum annual average concentration by multiplying the 1-hour maximum concentration by a generic conversion factor of 0.08.

It should be noted that SCREEN3 and MFFRST do not account for chemical reactions (transformation) in the atmosphere. MFFRST assumes that no transformation occurs in the air. For example, chromium emitted in the hexavalent form is assumed to stay in that form. This is a conservative but reasonable assumption because the duration of time that emitted chemicals will be in the atmosphere before reaching the potential receptors (i.e., onsite workers and nearby residents) is relatively short.

It should also be noted that MFFRST assumes that all air emissions (i.e., stack and fugitive) at a given facility are released from a single stack. This procedure is not expected, for most facilities, to result in predicted ambient air concentrations that are very dissimilar to the results that would have been produced if the model had been run for multiple stacks or vents.

5.4.3. Uncertainties in Toxicity Data

The available scientific data on toxic effects in humans of many chemicals emitted from electroplating facilities are limited. Consequently, varying degrees of uncertainty surround the assessment of adverse health effects in potentially exposed populations. Sources of uncertainty for toxic effects in humans include:

- Use of dose-response data from experiments on homogenous, sensitive animal populations to predict effects in heterogenous human populations with a wide range of sensitivities (interspecies extrapolation);

- Extrapolation of data from high doses in animals to “real-world” low doses, from acute or subchronic to chronic exposure, and from one route to another (e.g., from ingestion to inhalation exposure); and

- Use of single chemical data that do not account for possible antagonistic or synergistic responses from multiple chemical exposures.

Toxicity data are largely derived from laboratory animals. Experimental animal data have historically been relied upon by regulatory agencies and other expert groups to assess the hazards of chemicals to humans. Even though this reliance has been supported by empirical observations, there may be slight or marginal interspecies differences in the absorption, metabolism, excretion, detoxification, and toxic responses to specific chemicals. There may also be uncertainties concerning the relevance of animal studies using exposure routes that differ from human exposure routes. In addition, the frequent necessity to extrapolate results of short-term or chronic animal studies to humans exposed over a lifetime has inherent uncertainty. To adjust for many of these uncertainties, EPA often adjusts the RfD for noncarcinogenic effects using uncertainty and modifying factors on the most sensitive animal species.

There is also uncertainty as to whether animal carcinogens are also carcinogenic in humans. Although many chemical substances are carcinogenic in one or more animal species, only a small number of chemical substances are known to be human carcinogens. The fact that some chemicals are carcinogenic in some animals, but not in others, raises the possibility that not all animal carcinogens are carcinogenic in humans. EPA assumes humans are as sensitive to carcinogens as the most sensitive animal species. This policy decision, designed to prevent underestimating risk, may introduce the potential to overestimate carcinogenic risk for some chemicals.

5.4.4. Uncertainties in Exposure Assessment

Exposure assessment is perhaps the most critical step in achieving a reliable estimate of health risks to humans. In MFFRST, a number of assumptions were made concerning human populations that could come into contact with emissions from tanks, and the frequencies and durations of these contacts. The default exposure parameters used in this assessment were largely based on default values provided in *Exposure Factors Handbook* (U.S. EPA, 1997) and other standard EPA sources, and may not be entirely representative of the receptor populations. Therefore, MFFRST was designed to allow the user to vary any of the exposure parameter values within reasonable limits.

5.4.5. Uncertainties in Risk Estimates

A variety of uncertainties are inherent in exposure and risk estimates. First of all, not all chemicals have accepted cancer or non-cancer toxicity data. In the absence of such toxicity data, hazard quotients and cancer risks can not be calculated. Although these chemicals may not pose a

cancer or non-cancer risk, if present in large enough concentrations, these chemicals could pose other health effects.

For evaluating the impacts of exposure to multiple chemicals, EPA typically assumes additivity; however, this assumption may not be accurate. Actual effects may be multiplicative or may not be related at all. For purposes here, this translates to adding inhalation cancer risks and the hazard quotients calculated for different contaminants, for a given receptor. These types of cumulative risks are displayed in MFFRST when possible and appropriate.

Because there may be small individual uncertainties at each step of the risk assessment process, these uncertainties may become magnified in the final risk characterization. The final quantitative estimates of risk may be as much as an order of magnitude different from the actual risk associated with a given site In an attempt to minimize the consequences of uncertainty, EPA guidance typically relies upon use of conservative estimates of hazard in the absence of comprehensive appropriate data. The overall result is that risk estimates generated by MFFRST are more likely to overestimate actual risks than underestimate them.

The risk characterization methods developed by EPA estimate the upper bounds of potential risk. An advantage of this upper-bound estimate is that the actual risk of harm is unlikely to be any greater than is estimated. By overstating the actual risk, upper-bound estimates reflect a desirable conservative approach to risk assessment in an effort to protect public health.

5.5. REFERENCES

California Air Resources Board (CARB). 1999. Statewide toxics summary. Provided by M. Redgrave, CARB, to M. Lorber, U.S. EPA, October 22, 1999.

Report of Source Testing for Chromium Emissions and Chromium NESHAP Compliance Electronic Chrome and Grinding Company; November 2, 1998; prepared by Pacific Environmental Services, Inc. (PES), and submitted to USEPA, Region IX.

Final Report Emissions Test of a Wet Scrubber Serving Hard Chrome Plating Tanks Accu Crome Plating Co.; February 3, 1998; prepared by CTL Environmental Services, and submitted to South Coast Air Quality Management District (SCAQMD), Diamond Bar, CA.

Source Test Measurement of Chromium Emissions from Hard Chrome Plating Operations at Canyon Precision Plating & Grinding; April 23, 1992; prepared by PES for SCAQMD.

Report of Source Testing for Chromium Emissions and Chromium NESHAP Compliance Multichrome Company, Inc.; January 23, 1998; prepared by PES for USEPA, Region IX.

Research Triangle Institute (RTI). 1988. The fate of hexavalent chromium in the atmosphere. Prepared by the Research Triangle Institute for California Air Resources Board under Contract No. A6-096-32. October, 1988.

Source Test Report for Hard Chrome Plating Tanks Grant Piston Rings Company; April 13, 1989; prepared by PES

Source Test Measurement of Total and Hexavalent Chromium on Hard Chrome Plating Operations at U.S. Chrome Corporation of California; January 12, 1996; prepared by PES for SCAQMD.

Source Test Report Conducted at Chrome Crankshaft for Scrubber #3; October 27, 1993; prepared by Hui Sung Choe, Air Quality Engineer I, SCAQMD.

Source Test Report Conducted at Chrome Crankshaft for Scrubber #1; October 20, 1993; prepared by Derek K. Hollinshead, Air Quality Engineer, SCAQMD.

Stationary Source Emissions Test Conducted for Hawker Pacific; September 6 and 8, 1995; prepared by Truesdail Laboratories, Inc.

Compliance Source Test Report, Kwikset Corporation; October 16 and 17, 1997; prepared by SCEC.

Draft, unpublished Test Report of Department of Defense (DoD) Electroplating Facility; July, 2000; test performed and data prepared by Versar, Inc.

U.S. EPA. 1997. Exposure Factors Handbook. U.S. EPA Office of Research and Development. EPA/600/P-95/002.

6.0 MONITORING FOR KEY CONTAMINANTS

6.1. INTRODUCTION

This chapter serves three purposes: (1) to present data on the monitoring of metal finishing constituents within facilities and outside in the ambient environment near facilities, (2) to conduct some simple model testing exercises where predictions of MFFRST indoor and outdoor concentrations are compared to appropriate measurements, and (3) to provide an overview of methods to conduct air monitoring.

This review is not intended to be comprehensive; rather, it discusses only a small number of available studies which contain air monitoring data, and provides a look at monitoring methods. Like the example model testing conducted for this chapter, users are encouraged to seek similar monitoring data and to validate their usage of MFFRST. Data from this review may be useful for evaluating the relative accuracy of MFFRST's predictions of air concentrations of chemicals to which workers and nearby residents may be exposed.

Key contaminants described include those expected to be emitted by metal finishing facilities, such as chemicals used in aqueous processes, solvent degreasing, and plating/coating processes. These chemicals include: metals (hexavalent chromium, trivalent chromium, copper, cadmium, zinc, nickel, etc.) and solvents (trichloroethylene, 1,1,1 - trichloroethane, methyl ethyl ketone, toluene, and xylene). Hexavalent chromium, abbreviated Cr^{+6}, is a chemical of great interest to this industry sector, and most of the data in this chapter is on Cr^{+6}.

6.2. AIR MONITORING CONCENTRATIONS

Monitoring within metal finishing facilities has been conducted with the primary goal of determining human health effects from exposures in that setting. Concentrations have been determined with two primary types of monitors: "area" and "personal" monitors. Area monitors are stationary and, as the name suggests, are set up to evaluate the average air concentration in a particular location in a facility over a period of time. Personal monitors are worn by workers and are more specifically used to evaluate concentrations to which workers might be exposed. Like area monitors, outdoor ambient air samplers are stationary and are used to determine the average air concentration at a particular location over a period of time. Further details on monitoring methods are provided in Section 6.4. below.

This section summarizes a limited number of studies evaluating indoor occupational (Sections 6.2.1 and 6.2.2) and outdoor ambient air concentrations (Section 6.2.3) associated with metal finishing facilities. Section 6.2.3. also provides some monitoring data on background concentrations of some of the constituents that are modeled in MFFRST. All of these data are provided so that users of MFFRST have some basis upon which to compare predicted concentrations. Such a comparison is provided in Section 6.3. below, where predictions of hexavalent chromium associated with the generic decorative chromium and hard chromium plating lines are compared with both indoor occupational and outdoor ambient hexavalent chromium measurements discussed in Section 6.2.

6.2.1. Workplace Occupational Monitoring Data for Chromium

The studies reviewed in this section were conducted with the primary goal of determining human health effects from exposures to chromium in plating shops. These studies characterized chromium concentrations in shops and attempted to associate exposures to health effects such as nasal septum lesions and lung function impairment. The studies often measured air concentrations of chromium in various parts of the plating shops. Using these data, the investigators tried to quantify exposures to groups of individuals based on their jobs, and time spent in different exposure zones (i.e., the frequency and duration of time spent in different areas of the facility). As such, the studies often stratified their samples based on these factors.

Table 6-1 provides a summary of the workplace monitoring data for chromium from these selected studies. The major issue with chromium data in the literature is the variable characterization of chromium as “chromium,” “total chromium,” or “hexavalent chromium.” Each entry in Table 6-1 identifies the species of chromium as it was identified by the author. It should be recognized that these monitoring data were not collected from facilities to which MFFRST is likely to be applied. Specifically, the reports reviewed in this section were for facilities in Taiwan (Kuo et al., 1997a,b; Lin et al., 1994; Liu et al., 1998) and Finland (Kiilunen, 1994). It is not certain whether plating processes, pollution controls, and health and safety practices are comparable in the United States and these countries. Despite this limitation, these examples may be useful in determining the range of typical air concentrations of chromium that could be seen in metal finishing shops in the United States.

Kuo et al. (1997a) conducted a study to determine both the concentration and the size distribution of airborne hexavalent chromium within electroplating facilities in Taiwan. Focusing on workers from four electroplating factories, Kou et al. (1997a) compared airborne hexavalent chromium concentrations at different kinds of plating plants: two factories used chromium, one used

Table 6-1. Summary of Workplace Air Concentrations of Chromium

Concentration, ：g/m³				Description and Reference	
Min.	**Max.**	**Mean**	**95%**		
1.7	168.3	89.7		CE near electroplating tanks; n = 23	Lin et al. (1994). Sampling in a chromium electroplating facility (CE), three different locations, compared with an aluminum electroplating (AE) facility in Taiwan; 4-6 hr samples of total chromium; means are geometric means
0.5	39.7	11.2		CE other process locations, n = 25	
0.3	4.4	1.5		CE office and outdoors, n = 14	
0.04	0.2	0.1		AE, n = 15	
0.4	182.6	4.20		HCPP	Liu et al. (1998). Sampling in hard chrome plating plants (HCPP), nickel chrome electroplating plants (NCEP), and aluminum anode-oxidation plants (AAOP) in Taiwan, using personal air samplers at 1.0-1.4 m height, for 4 hours randomly selected during work week; measurements reported as “air chromium” assumed to be total chromium
0.3	2.3	0.58		NCEP	
0.1	2.2	0.43		AAOP	
0.5 0.3	6.0 0.3	3.3 0.3		Cr; area; NT; n=2 Cr ; area; OP; n=1	Kuo et al. (1997a). Sampling in chromium (Cr), nickel-chromium (Cr-Ni), and zinc (Zn) electroplating factories in Taiwan. Samplers included area and personal samplers. Two personal sampling events tested 81 and 37 mm filters (latter noted as w/37 mm). Areas sampled include near tank (NT), other processes (OP), and administrative office (AO). Sampling time was 6 hours; air concentration of chromium reported as hexavalent chromium.
0.6 0.2	0.6 0.2	0.6 0.2		Cr-Ni; area; NT; n=1 Cr-Ni ; area; OP; n=1	
0.2 0.1 0.1	230.0 0.6 0.4	63.2 0.3 0.3		Cr; personal; NT; n=12 Cr; personal; OP; n=6 Cr; personal; AO; n=2	
0.2 0.6 0.7	0.7 0.9 0.7	0.5 0.7 0.7		Cr-Ni; personal; NT; n=2 Cr-Ni; personal; OP; n=4 Cr-Ni; personal; AO; n=1	
ND ND ND	ND ND ND	ND ND ND		Zn; personal; NT; n=2 Zn; personal; OP; n=1 Zn; personal; AO; n=1	
0.1 0.1	40.0 4.0	8.0 1.9		Cr; personal w/37 mm; NT; n=6 Cr; personal w/37 mm; OP; n=4	
0.3 0.7	5.0 4.0	2.8 1.9		Cr-Ni; personal w/37 mm; NT; n=3 Cr-Ni; personal w/37 mm; OP; n=3	
ND ND	ND ND	ND ND		Zn ; personal w/37 mm; NT; n=3 Zn ; personal w/37 mm; OP; n=1	
				Total Chromium	Kiilunen M. (1994). Occupational air measurements of total and hexavalent chromium made between 1980 and 1989 conducted and accumulated by the Finnish Institute of Occupational Health, for the categories which they characterize as, 1) “fabricated metal products” (FMP), 2) “basic metal industries” (BMI), and 3) “machinery and equipment” (ME)
– – –	9,800 3,400 1,800	266 142 121	1,030 480 560	FMP, n=331 BMI, n=110 ME, n=282	
				Hexavalent Chromium	
– – –	1,500 667 1,000	48 56 43	250 280 255	FMP, n=192 BMI, n=42 ME, n=269	

nickel-chromium, and one used zinc. Workers from the zinc factory were used as the control group. Area and personal air monitoring were conducted.

Kuo et al. (1997a) found that personal and area sample concentrations of hexavalent chromium were highest near the electroplating tanks in the chromium factory, and were higher by one or more orders of magnitude than in other parts of the facility (near other processes and in the administrative offices). Of the twelve personal samples collected from the chromium electroplating factories, four exceeded the legal permissible chromium levels in Taiwan. The highest concentration measured was 230 $\mu g/m^3$. Area sampling in the Cr-Ni operation found slightly lower chromium concentrations, though the level near the Cr-Ni electroplating tank (0.6 $\mu g/m^3$) exceeded the concentration found in the manufacturing areas of the chromium plant (0.3 $\mu g/m^3$). Air samples collected at the zinc electroplating factory were all nondetect.

Kuo et al. (1997b) provides results of a study conducted to compare nasal septum lesions and lung function in workers exposed to chromic acid in 11 electroplating facilities in central Taiwan. Sampling was conducted in three chromium, six nickel-chromium, and two zinc electroplating factories and included a total of 189 workers. Among other objectives, this study investigated the correlation between total chromium levels in air and urine, and human health effects such as nasal septum lesions and lung function. Actual measured chromium air concentrations were not provided in this paper; however, Kuo et al. (1997b) concluded that their results indicate a statistically significant correlation (0.54) between airborne chromium concentration levels and urine levels of chromium - presented in terms of creatinine (Cre.) levels. The highest urinary concentrations (maximum value = 41.0 µg/g Cre.) were found in chromium workers, followed by nickel-chromium workers (maximum value = 7.3 µg/g Cre.), and zinc workers (maximum value = 3.7 µg/g Cre.).

In another study, Liu et al. (1998) studied a biochemical marker as an indicator of renal dysfunction in electroplating workers. Air monitoring was conducted in 16 electroplating plants in Taiwan. A total of 178 workers were divided into 3 exposure groups depending on the type of factory: hard chrome plating plants, nickel-chrome electroplating plants, and aluminum anode-oxidation plants. Monitoring was conducted using personal air samplers at a height of 1.0 to 1.4 m, for 4-hour periods randomly selected during the work week. Airborne chromium concentrations were highest in the hard chrome plating plants followed by the nickel-chrome electroplating plants and the aluminum plants. Urinary chromium concentrations were also measured as an indicator of the magnitude of chromium exposure. Chromium levels were presented in terms of µg chromium per gram creatinine. Levels were found to be highest among hard chrome plating workers (geometric mean = 2.44 µg/g Cre.), followed by nickel-chrome electroplating workers (geometric

mean = 0.31 µg/g Cre.) and aluminum workers (geometric mean = 6.09 µg/g Cre.). A positive correlation was found between urinary chromium and airborne concentrations.

Lin et al. (1994) reported the results of air monitoring conducted in three different exposure zones in seven chromium electroplating (CE) facilities in Taiwan. Three aluminum electroplating (AE) facilities were used as a reference group. The chromium electroplating factory surveys included 79 workers and the aluminum electroplating factory surveys included 40 workers. Air concentrations were measured by collecting area samples for 4-6 hours. Three different exposure zones were studied: workers directly dealing with electroplating tanks (n=31), other process workers who worked at least 3 m away from tanks (n=29), and office workers and drivers who were expected to have low exposures to chromium (n=19). Samples were analyzed for total chromium according to NIOSH Method 7600 (NIOSH, 1984). Seven of 23 air samples taken near chromium electroplating tanks had concentrations which exceeded 50 µg/m^3, the TWA-threshold limit value (TLV) for total chromium recommended by ACGIH. Concentrations in other process areas were generally lower than those close to the tanks. The airborne concentrations in the shop offices and outdoors were even lower. The workers' urine chromium concentrations correlated well with the TWA air chromium concentrations measured from area sampling and work duration in their respective workplaces. However, the workers' urine chromium concentrations showed no correlation with their lifetime working duration (Lin et al., 1994).

Between 1980 and 1989, the Regional Institutes of Occupational Health in Finland made 1,586 total or trivalent chromium and 1,518 hexavalent chromium measurements from stationary locations or from the breathing zones of workers (Kiilunen, 1994). These measurements were requested by a variety of industries wishing to assess their workers' exposures. The industries most sampled for chromium were categorized as "basic metal industries," "fabricated metal products," and "machinery and equipment." Table 6-1 presents a summary of total and hexavalent chromium concentrations measured for these industries. The mean total chromium concentrations ranged from 121 to 266 µg/m^3. The Finnish Occupational Exposure Level (OEL) of 500 µg/m^3 was exceeded in several samples. The average concentration of hexavalent chromium for these three industry sectors ranged narrowly from 43 to 56 µg/m^3, and there were also exceedences of the OEL of 50 µg/m^3 for hexavalent chromium. Kiilunen (1994) reported that 5.7% of all measurements of hexavalent chromium and 9.7% of total chromium exceeded the Finnish OELs for these constituents, but that 18% of the workplaces tested had exceedences of at least one of these in at least one measurement.

Although the few studies described above represent only a limited sampling of chromium finishing facilities, and none from the United States, the following observations and conclusions might be drawn from these studies:

- Higher contaminant concentrations are found near electroplating tanks as compared to other locations within metal finishing facilities. Specifically, the highest air concentrations within a shop are generally found directly above the process tanks.

- Concentrations in the tens to even hundreds of ：g/m^3 of chromium or hexavalent chromium have been measured near plating tanks in chrome plating facilities in Taiwan. Although not location specific, concentrations of these magnitudes were also reported for Finland. When the sampling was characterized as representative of an area that was not specifically very near a plating tank, the measured concentrations were in the low to sub ：g/m^3 level in Taiwan.

- Higher chromium concentrations are found in dedicated chromium electroplating facilities compared to other electroplating facilities such as nickel chrome or aluminum electroplating facilities.

- Workers who spend more of their time near the plating lines are expected to receive higher exposures than those who perform other duties within a shop. Likewise, workers in dedicated chromium facilities, in contrast to facilities such as nickel-chromium or aluminum, have a higher exposure to chromium as compared to workers in other types of metal finishing facilities, even those with some chromium in their operation.

6.2.2. Workplace Occupational Concentrations for Constituents other than Chromium

Table 6-2 provides a summary of results from three literature references which reported on measurements for constituents other than chromium within metal finishing facilities. Two are from plating operations in the United States, and the third is the compilation by the Finnish Institute of Occupational Health, which compiled nickel concentrations in addition to chromium. Note that results in Table 6-2 are expressed in units of mg/m^3, rather than the µg/m^3 displayed in Table 6-1 for chromium.

Between 1980 and 1989, the Regional Institutes of Occupational Health in Finland made 1,078 nickel measurements from stationary locations or from the breathing zone of workers (Kiilunen, 1994). The highest concentrations, over 16.0 mg/m^3 with an average of 2.89 mg/m^3, were from a very limited sampling of “glass, clay and stone products” (n = 11). High concentrations were also found in mining and quarrying, with an average of 0.622 mg/m^3 for also a limited sampling (n = 14). Table 6-2 shows the compiled results for three large industry sectors: “basic metal industries,” “fabricated metal products,” and “machinery and equipment.” The mean nickel concentrations in these three industry sectors ranged from 0.076 to 0.206 mg/m^3. The Finnish Occupational Exposure Level (OEL) of 0.100 mg/m^3 for nickel compounds was exceeded in some samples from all three industry sectors. Kiilunen (1994) reported that 18% of all measurements of nickel exceeded the

Table 6-2. Overview of Concentrations of Constituents other than Chromium in Electroplating Shops
(Note: concentration is in mg/m^3 while chromium concentrations in Table 6-1 are in ：g/m^3)

Concentration, mg/m^3				Constituent	Description and Reference	
Min.	**Max.**	**Mean**	**95%**			
– – –	11 5.3 1.3	0.206 0.192 0.076	8 0.68 0.3	nickel	FMP: n = 292 BMI: n = 115 ME: n = 267	Kiilunen (1994). Occupational air measurements of nickel made between 1980 and 1989 by the Finnish Institute of Occupational Health, for industrial categories characterized as, 1) "fabricated metal products" (FMP), 2) "basic metal industries" (BMI), and 3) "machinery and equipment" (ME)
0.0002	0.0007	NA		chromic acid	n = 6	Almaguer et al. (1984). Personal breathing zone and general air samples collected as part of an environmental survey conducted by NIOSH of an electroplater. The first entry for TCE is for general area (G) monitoring and the second, higher set is for personal (P) monitoring. NA indicates an average was not provided because the reported levels were from different locations within the plant.
7.5	26.5	14.9		1,1,1-trichloroethane	n = 10	
0.5	3.2	1.1		TCE (G)	n = 10	
ND	133.3	83.2		TCE (P)	n = 7	
1.5	25.0	NA		Ethyl Acetate	n = 4	
ND	0.8	NA		HCl	n = 3	
58	508	253		TCE (D)	n = 4	Hervin et al. (1974). Results from a NIOSH survey the cleaning area of an electroplater. Personal monitors obtained TCE and methylene chloride (meth. ch.) air concentration data from 1 degreaser (D), 4 platers (P), and 1 paint stripper (S).
ND	74	15		TCE (P)	n = 16	
7	10	8		TCE (S)	n = 4	
<3.5	10	4		meth. ch. (D)	n = 4	
<3.5	25	7		meth. ch. (P)	n = 16	
6	403	108		meth. ch. (S)	n = 4	

Finnish OEL for nickel, and that 22% of the workplaces tested exceeded the nickel OEL at least once.

In 1983, Almaguer et al. (1984) collected personal breathing zone and general air samples as part of an environmental survey conducted by NIOSH in response to reported symptoms of upper respiratory tract irritations in the assembly department of Johnson Controls Incorporated, Watertown, Wisconsin. Table 6-2 provides a summary of the levels reported in this study for the six chemicals monitored. It should be noted that reported ranges for chromic acid, trichloroethylene (TCE), ethyl acetate, and hydrochloric acid (HCl) (general area and personal breathing zone air concentrations) cover various sampling locations in the facility. Almaguer et al. (1984) concluded that chromic acid levels were low in the assembly department, which is located in the middle of the plant, and is separated from the metal treating department by two doors. The area of the assembly department where employees expressed concern was the area nearest the plating department doors. The investigation determined that the chromic acid detected in that area resulted not from seepage from the metal treating department through the doors, but rather from re-entry of emissions out of the stack from the metal finishing department into the air intake vent for the facility.

Almaguer et al. (1984) reported that seven major degreasing, metal cleaning, and metal plating processes were located in the metal treating room . In this area, employees placed component parts onto racks or into baskets for dipping in the various acids and caustics for metal cleaning, solvents for degreasing, and plating solutions for metal plating. In the metal treating room, TCE was the main solvent used in the degreasing operation and zinc and copper were the main metals used for plating. The NIOSH investigators collected personal breathing zone and general area air samples for chromic acid, TCE, 1,1,1-trichloroethane, ethyl acetate, and HCl. Personal air exposure measurements were obtained by placing the appropriate sampling media in the worker's breathing zone while general area air samples were obtained by locating the sampling pump and media at the desired location. TCE levels were found to be significantly higher in the metal treating room at the degreaser units (32.7 mg/m^3 for a 5.5-hour sampling period and 133.3 mg/m^3 for a 3-hour sampling period) while levels in other areas of the plant and outside were an order of magnitude lower.

Hervin et al. (1974) conducted an environmental survey for NIOSH of the metal finishing department of the Vendo Company, Kansas City, MO. The electroplating department cleaned, plated, and occasionally polished vending machines. The cleaning process in the electroplating area involved the intermittent use of a TCE vapor degreasing tank. The investigators reported that the chief complaints from the employees were reactions to the odor and fumes from the solutions used in degreasing and stripping operations. TCE, methylene chloride, and methyl cellusolve were

reported to be the main solvents used. The study focused on the degreaser and the paint stripping operations. Hervin et al. (1974) reported that the maximum concentrations of TCE detected were personal air monitoring samples taken from the degreaser operator which ranged from 58 to 508 mg/m^3. The maximum concentration of methylene chloride detected was the personal air monitoring sample taken from the stripper operator which measured 403 mg/m^3. Table 6-2 presents the sampling results for methylene chloride and TCE in various areas of the electroplating department. Hervin et al. (1974) noted that during the sampling period, the stripping and degreasing operations operated less frequently than normal. This sporadic use may explain the wide ranges in the measured concentrations of TCE and methylene chloride.

6.2.3. Ambient Air Monitoring Data for Chromium and Other Metal Finishing Constituents

The intended purpose of this section was to review studies measuring the ambient concentrations of chromium and other metal finishing process chemicals outside metal finishing facilities. Unfortunately, only one study was located in which measurements were specifically made in the near vicinity of a chromium metal finishing facility for the express purpose of characterizing the impact of emissions from the facility. This type of study is the best for purposes of testing and evaluating MFFRST. Other data were located that were collected from background settings for chromium and other constituents. Data were also found associated with chromate ore processing sites, which, while not directly amenable to use of MFFRST to model chromium air concentrations near metal finishing facilities, nonetheless provide some information on what might constitute “elevated” chromium air concentrations (elevated above background). Chromium ambient air monitoring data are summarized in Tables 6-3 and 6-4, and ambient air data for other constituents are shown in Table 6-5.

Table 6-3 summarizes data from a study specifically designed to assess the impact of emissions of chromium from a chrome plating facility. The facility, Chrome Crankshaft, is located in Los Angeles, CA, and the study was conducted by Research Triangle Institute for the California Air Resources Board (RTI, 1988). Four sets of data, from as many as five stations located in the vicinity of the plating facility, were collected to determine ambient air concentrations of total chromium and hexavalent chromium. Concentrations varied depending on sampling location. Sampling sites were located upwind (1 station) and downwind (4 stations) of the facility, from 0.3 to 1.0 km from the source. Hexavalent chromium levels measured at the "near downwind" station (from 0.3 to 0.5 km from source) ranged from 0.0263 ：g/m^3 to 0.315 ：g/m^3. Concentrations of hexavalent chromium at the "far downwind" site (from 0.8 to 1.0 km from source) were about an order of magnitude lower, ranging from <0.0005 to 0.0143 ：g/m^3.

Table 6-3. Ambient Air Measurements from a Chrome Plating Facility in California

Run No.	Position No.	Cr^{+6} (:g/m^3)	Total Cr (:g/m^3)	Cr^{+6}/ Total Cr
3	0 - Upwind	0.0027	0.0103	N/A
	1 - Predicted Downwind[a]	0.0023	0.0084	0.27
	2 - Near Downwind	0.0335	c	—
	3 - Far Downwind	0.0037	0.0191	0.19
5	0 - Upwind	0.0026	(0.153)	N/A
	1 - Predicted Downwind[b]	0.110	0.102	~1.0
	2 - Far Downwind	0.0076	0.0183	0.42
	3 - Location 3	0.0012	0.0109	0.11
	4 - Location 4	<0.0005	0.0048	<0.1
7	0 - Upwind	0.0019	0.0513	N/A
	1 - Location 1	0.0264	0.0747	0.35
	2 - Location 2	<0.0005	0.0117	<0.1
	3 - Location 3	<0.0005	0.0166	<0.1
	4 - Location 4	<0.0005	0.0041	<0.1
8	0 - Upwind	0.0024	<0.003	N/A
	1 - Predicted/Near Downwind	0.316	0.340	0.93
	2 - Far Downwind	0.0143	0.0247	0.58
	3 - East of Source	0.0103	0.0283	0.36
	4 - North of Source	0.0138	0.0207	0.67

[a] Predicted Downwind means that the monitoring station was located in a place where the wind direction was predicted to be in a straight line from the facility.
[b] Predicted Downwind site was actually Near Downwind
[c] Defective Sample (no flow)
N/A = Not Applicable

Source: RTI (1988).

Table 6-4. Chromium Concentrations Associated with Chromate Ore Mining Sites in New Jersey and Background Settings in California

Concentration, ：g/m^3			Description and Reference	
Min.	**Max.**	**Mean**		
0.004 0.0006	0.130 0.027	0.013 0.0025	Total Cr; above soil; n=24 Cr^{+6}; above soil; n=22 Means are geometric means	Paustenbach et al. (1991). Sampling conducted above contaminated soil chromate ore processing residue site in New Jersey.
		0.003 0.023 <0.002 0.005 0.001 0.007	Cr^{+6}, indoor, cont. sites, n=106 Tot Cr, indoor, cont. sites, n=103 Cr^{+6}, outdoor, cont. sites, n=119 Tot Cr, outdoor, cont. sites, n=88 Cr^{+6}, indoor, background site, n=43 Tot Cr, indoor, background site, n=49 All results are normal means	Falerios et al. (1992). Sampling conducted in 21 sites in Hudson County, NJ, at chromate ore processing residue sites. Sampling conducted indoors and outdoors at the contaminated sites, and also including indoor at 15 residences as background
0.00011 0.0039	0.00027 0.0051		Cr^{+6}; ambient background, 1992-98 Tot Cr, ambient background, 1992-98 Range reflects range of annual average concentrations	CARB (1999). Range of annual average of monthly means from 1992 to 1998 in the CARB toxic data base of ambient air concentrations.

Table 6-5. Ambient Air Monitoring Data for Metal Plating Constituents in California During 1998*

Parameter Name	Minimum	Median	Mean of Monthly Means	90th Percentile	Maximum
Arsenic	1.5	1.5	1.6	1.5	9
Arsenic	0.1	0.6		1.5	3.1
Chlorine	8	640	1,490	3,720	14,000
Chloroform	0.01	0.03	0.038	0.06	0.32
Chromium	1	3	3.9	8	20
Copper	1	22	32.8	74	250
Ethyl Benzene	0.3	0.3	0.35	0.3	4.2
Formaldehyde	0.05	2.2	2.52	5.5	10
Lead	2	7	10.8	20	340
Manganese	1	14	20.2	43	140
Mercury	1.5	1.5	1.5	1.5	10
meta/para-Xylene	0.3	0.3	0.76	1.8	14
Methyl Ethyl Ketone	0.05	0.1	0.17	0.4	1.1
Methylene Chloride	0.5	0.5	0.62	0.5	7.2
Nickel	1	2	3.4	6	60
Perchloroethylene	0.005	0.04	0.114	0.28	2.2
Toluene	0.1	1.4	2.1	4.4	25
Trichloroethylene	0.01	0.01	0.031	0.06	1.3
Zinc	1	37	47.1	93	350

* Concentration of VOCs expressed in ppb. Metals expressed in ng/m3.

Source: CARB (1999).
Values below the detection limit set to one-half the detection limit for statistic calculations.
Means of Monthly Means based on fewer than 12 months are invalid and are not shown.

Table 6-4 summarizes chromium air measurements at locations not associated with metal finishing. The reported concentrations are much less than 1.0 ：g/m^3. For example, hexavalent chromium is present in ambient background environments at concentrations between 0.001 and 0.10 ：g/m^3. Falerios et al. (1992) and Paustenbach et al. (1991) present extensive data (and other analysis) of total and hexavalent chromium in ambient air associated with chromite ore processing contaminated soil sites in New Jersey. Most of their data were collected near the contaminated soil sites, both indoor and outdoor samples. However, indoor samples at 15 residences were collected to represent background conditions. As seen by the summary of their data on Table 6-4, essentially all the data suggests airborne concentrations of Cr^{+6} to be less than 0.010 ：g/m^3. Table 6-4 also shows ambient air monitoring data for Cr^{+6} conducted by the California Air Resources Board (CARB, 1999) in areas not near industrial air sources. The annual average concentrations for years 1992 to 1998 ranged from 0.00011 to 0.00027 ：g/m^3.

An important issue for chromium concentrations in ambient air is the portion which is in the toxic form, hexavalent chromium. The best evidence for the relationship between hexavalent and total chromium near a chromium finishing facility comes from the CARB study, which measured both near Chrome Crankshaft in Los Angeles described earlier (RTI, 1988). The ratios of hexavalent to total chromium are shown in Table 6-3. Different ratios were found depending on whether the measurement was downwind within the plume or outside the plume. Downwind at 0.3 km, site #1 identified as “predicted downwind” or “near downwind” in Table 6-3, the ratios of hexavalent to total chromium for four measurements were 0.27, 0.35, 0.93, and 1.00. The two highest hexavalent chromium measurements at 0.110 and 0.316 ：g/m^{3}were also the ones with ratios above 0.90. In other measurements not downwind, the hexavalent to total chromium ratios ranged from <0.1 to 0.67 with a mean of 0.25 (n=10). This might suggest, for the tested facility at least, that emissions of chromium are initially Cr^{+6}, which then dissipates and/or transforms to other forms of Chromium.

The CARB study (RTI, 1988) also involved several laboratory and field studies to quantify the rate of conversion of hexavalent chromium spiked on PVC filters to trivalent chromium. The studies were performed for periods of 24 to 48 hours. The average half-lives of hexavalent chromium were 12.9 hours in the laboratory studies and 16.4 hours in the field studies.

Others have also investigated the relationship between total and hexavalent chromium. Falerios et al. (1992) investigated the difference in concentrations between total and hexavalent chromium in indoor and outdoor environments associated contaminated soil chromate ore processing sites. With over 100 indoor and 100 outdoor air concentration samples at 21 such sites, they generally found that hexavalent chromium was from below 10% to over 60% of total chromium

(these were averages from each of the 21 sites). The overall averages (for all 21 sites) for indoor and outdoor environments were 21 and 25%, respectively. Paustenbach et al. (1991) measured ambient outdoor and indoor total and hexavalent chromium, using different analytical methods, and showed that the total chromium concentration was, on average, five times higher than the hexavalent chromium concentration. The statewide toxic database of ambient air monitoring results developed and maintained by the California Air Resources Board (CARB, 1999) suggests that the ratio of Cr^{+6} to total Cr is much lower than 20% in ambient environments not near industrial air sources. From that database, Cr^{+6} outdoor concentrations ranged from 0.00011 to 0.00027 ：g/m^3, while total Cr measurements ranged from 0.0039 to 0.0051 ：g/m^3, suggesting a ratio less than 5%. Since none of these background ambient air studies were in or near plating facilities, their results cannot be considered representative of chromium air emissions from plating facilities and their fate downwind. For the ambient environments measured, however, it would appear that hexavalent chromium is 20% or less of total chromium.

From this limited review of ambient air chromium data, the following observations can be made:

1) Only one study could be found which reported data that could be used to evaluate the accuracy of MFFRST predictions. This study measured total and hexavalent chromium at various distances (but near) downwind and upwind of an operating chromium plating facility. At the nearest monitor, 300 meters away, during downwind conditions, concentrations of hexavalent chromium ranged from 0.026 to 0.316 ：g/m^3. For other conditions, including both downwind but further away and upwind, concentrations were mostly in the range of 0.010 ：g/m^3 and lower.

2) Other measurements of hexavalent chromium in background ambient air, not near known sources, showed concentrations to be in the range of 0.001 ：g/m^3 or less suggesting that even concentrations of 0.010 ：g/m^3 are elevated.

3) For health assessments, the form of chromium is of utmost importance. The one study measuring near field (i.e., 300 meters) air concentrations resulting from emissions from an operating chrome plating facility showed both high concentrations of hexavalent chromium and nearly all, >90%, of the chromium in the air being hexavalent chromium <u>when there were downwind conditions</u>. During other wind pattern conditions, concentrations were lower and a much smaller percent of the total chromium measured, 25% or less, was hexavalent chromium. Other field and laboratory tests conducted as part of this study indicated that the average half-life of hexavalent chromium was in the range of 13 to 16

hours. In background ambient environments not near sources of chromium emissions, hexavalent chromium appears to be generally less than 20% of total chromium, perhaps near 10% as an average.

MFFRST conservatively assumes that all chromium emissions from the generic decorative and hard chrome plating lines are initially hexavalent chromium. The data from Chrome Crankshaft (RTI, 1988) suggests that this may be a reasonable assumption - that initially 100% of chromium emissions are hexavalent chromium and that the half-life of hexavalent chromium is on the order of 13 to 16 hours. The air concentrations that are predicted to result from emissions in MFFRST do not account for any transformations of hexavalent to trivalent chromium, however. Also, MFFRST predictions are annual average maximum concentrations, which are not necessarily downwind-conditions only concentrations. Since the available monitoring data show that hexavalent chromium is only a small percent of total chromium near the operating chromium facility, perhaps under 25%, in conditions other than downwind, transformation of hexavalent chromium to other, less toxic, forms of chromium is indicated. Therefore, while MFFRST may be predicting annual average maximum concentrations of chromium that may be reasonable, the assumption that all emitted chromium remains as hexavalent chromium is conservative and may result in predicted annual average maximum concentrations of hexavalent chromium that are too high.

The California Air Resources Board (CARB) collects ambient air measurements of toxics at monitoring stations across California. Summary data describing airborne concentrations of metal finishing process chemicals from 1998 are presented in Table 6-5 (CARB, 1999). While these monitoring data are not directly tied to metal finishing facilities, they provide an indication that chemicals released by metal finishing facilities can be detected in ambient air. Chemicals characterized include metals other than chromium, and select volatile organic compounds that are used in plating shops. Among metal finishing solvents monitored in California, toluene, perchloroethylene, and trichloroethylene were measured in 1998 at maximum concentrations of 25, 2.2, and 1.3 ppb (or 94.3, 14.9, and 6.9 $\mu g/m^3$), respectively. Data are also available for the years from 1989 to 1998, but are not presented in this report for any chemical other than TCE (see Table 6-4).

6.3. MONITORING METHODOLOGIES

As stated previously, MFFRST is a screening model and, therefore, is intended to generate results (i.e., predicted air concentrations and exposures) that are likely to be higher, or at least higher than average, as compared to concentrations that might actually be occurring in a real world setting. If the exposures predicted by MFFRST for a given facility result in an unacceptably high health risk,

then the model user may want to consider conducting a monitoring study to assess the validity of the model results.

The purpose of this section is to provide a general overview of occupational, stack, and ambient air measurement techniques with particular focus on measurement of hexavalent chromium. This section is not intended to be a guide for designing and conducting a monitoring study. Rather, this section provides a discussion of general methodologies, design considerations, and examples of monitoring and analytical methods that are available.

6.3.1. General Methodologies

If one is considering a monitoring study, a useful starting point is EPA-ORD's Guidance document on data quality objectives (DQOs) (U.S. EPA, 1994), which provides a helpful review and context for monitoring study design and sampling/analytical method selection. According to ORD, "the DQO process is a strategic planning approach based on the scientific method that is used to prepare for a data collection activity. It provides a systematic procedure for defining the criteria that a data collection design should satisfy, including when to collect samples, where to collect samples, the tolerable level of decision errors for the study, and how many samples to collect." DQOs are therefore qualitative and quantitative statements derived from the DQO process outputs that:

- Clarify the study objective;
- Define the most appropriate type of data to collect;
- Determine the most appropriate conditions from which to collect the data; and
- Specify tolerable limits on decision errors which will be used as the basis for establishing the quantity and quality of data needed to support the decision.

Depending upon whether occupational or ambient air measurements are to be taken, and whether outdoor or indoor samples are to be collected, various sampling approaches are available, including: personal, area, ambient air and stack sampling. Information about sampling system design is available from numerous sources, including ASTM (1992), NIOSH (see Table 6-1), OSHA, and the EPA-OPPTS Series 875 Occupational and Residential Exposure Test Guidelines: Part B Post-Application Exposure Monitoring Test Guideline 875.2500 (1998). A brief review of the general methodological approaches available is provided below.

Both personal and area monitoring can provide airborne concentration data that may be relevant to assessing potential occupational exposure. Personal monitoring is generally performed using battery-powered pumps/devices connected to filters, sorbent tubes, impingers, or cyclones

(or combinations thereof), which operate at a range (usually lower range) of flow rates. Area monitoring (also known as "stationary" monitoring) can be performed at a wider range of flow rates, using either personal sampling pumps, mid- and high-flow rate stationary air samplers, or direct-reading instruments, the latter ranging in complexity from the simple colorimetric detector tube to gas chromatographs. Both personal and area samples are generally collected indoors.

Personal monitoring using battery powered personal sampling pumps is generally preferred for quantifying inhalation exposure levels. These sampling trains should be attached to test subjects in the least obtrusive, most comfortable manner possible. Devices which contain sampling media (e.g., filter cassettes, cyclones, personal impingers) should be attached to lightweight sampling pumps and clipped to the collar (or otherwise positioned) as close to the breathing zone of subjects. It is desirable that the sampling air inlet be oriented slightly downward whenever possible.

Personal air sampling is preferred for occupational exposure determinations. However, depending on the degree of sensitivity required, cost considerations, etc., area sampling techniques may provide additional useful information for exposure determinations. Area monitoring samples are typically collected near the contaminant source, and distances from the source should be documented. Samples should be collected in source zones that are typical of the exposure scenario being monitored. For example, samples should be collected close to a plating bath, and at known distances from that source.

Outdoor ambient air samples are collected using technologies similar to those used to collect indoor area samples. Ambient air samples are used to determine the average air concentration at a particular location over a period of time. These samples may also serve as controls when personal and area samples are collected indoors.

Stack samples are a specialized type of area sample, requiring special, often complex, apparatus which permit a sampling probe to be introduced into a stack. Stack sampling probes are often fitted with accessory temperature and pressure reading devices.

6.3.2. General Considerations

Although the focus of this chapter is on monitoring of hexavalent chromium (and therefore most of the methods discussed below are specific to this analyte), most of the referenced methods cited (e.g., EPA, NIOSH, ASTM, etc.) publish compendia of methods which contain sampling and analytical methodologies for many other chemicals of concern that may be released to air from metal finishing facilities.

Certain basic issues will always need to be considered and addressed when choosing a sampling and analytical method. These include: 1) adequate method sensitivity, 2) sample stability, 3) the form in which the analyte is expected to be found (e.g., particulate, vapor, mist, fume, etc.), and 4) environmental factors.

For example, when monitoring for airborne hexavalent chromium, the most important issue is the problem of protecting toxic Cr^{+6} from conversion on or in the sample collection medium to the considerably less toxic Cr^{+3}, which is necessary to avoid introducing sample bias. Cr^{+6} is unstable under environmental conditions and converts to Cr^{+3} in presence of inorganic reducing agents (e.g., Fe^{+2}, organics, V^{+}, V^{+2}) and acids that may be present in the atmosphere, particularly in areas with poor air quality. As discussed in Section 6.2.3, RTI (1988) conducted laboratory and field studies to examine the rate of conversion of hexavalent chromium spiked onto PVC filters under relatively good air quality conditions. The average half-life of hexavalent chromium was in the range of 13 to 16 hours. Available information indicates that the reverse reaction (i.e., Cr^{+3} converting to Cr^{+6}) does not occur in the field.

A second important issue involves determining whether Cr+6 is likely to be present bound to particulates. If this is the case, it becomes advisable to select a sampling technique that can distinguish between respirable and non-respirable particulates. Respirable airborne particulates range in diameter from greater than 0.2 µm to less than 10 µm.

Thirdly, ventilation conditions prevailing at a sampling site, particularly at an indoor location, may seriously affect monitoring results, and introduce additional variables and uncertainties in the data. Monitoring campaigns should assess general ventilation conditions, exhaust ventilation function, consider the presence or absence of basic engineering controls, and whether these controls function as expected or prescribed. Specifically, the following engineering control and work practice issues should be evaluated and documented before air monitoring is undertaken, to aid in later interpretation and contextualization of data obtained:

- Ventilation system effectiveness: Both general and exhaust ventilation system conditions should be assessed using smoke tubes and an anemometer. Push-pull exhaust ventilation systems over plating tanks should attain exhaust rates of approximately 250 $ft^3/min/ft^2$.

- General ventilation system concerns: Drafts from windows and doors should be noted and controlled before sampling. Use of standup portable fans should be avoided where exhaust ventilation systems are operational.

- Presence of engineering controls: (a) Tanks should be covered to reduce release of mists. Covers are generally constructed of plastic chips, beads, balls or foam blankets which

float on the surface of the tank. Twenty-fold reductions in mist concentrations have been reported after installation of tank covers. (b) installation of baffles around tanks can dramatically reduce interference by stray air currents.

- Use of surfactant chemicals to lower surface tension in plating tanks, promoting formation and release of smaller air bubbles to the ambient air.

- Variations in plating operation efficiency: regular maintenance of electrical contacts, use and monitoring of optimum temperature and chemical concentrations will result in higher plating efficiencies and less loss to the ambient air.

6.3.3. Overview of Hexavalent Chromium Monitoring Methodologies

The following subsections and Table 6-6 summarize the most commonly used monitoring methods for sampling and analysis of airborne hexavalent chromium.

6.3.3.1. *Methods with Application to Occupational Air Monitoring*

Apart from colorimetric tubes (a direct analysis technique), there are essentially three sampling approaches which are used to collect occupational hexavalent chromium exposure data: 1) PVC filters, 2) impingers, and 3) particle sizing methods. Variations of these methods may be applied to either personal or area sampling. Although impinger methods are not the most convenient for personal monitoring, impingers have the advantage of fixing hexavalent chromium in an alkaline collection medium, preventing the conversion losses which may occur on PVC filters. Impingers are also used to collect area air samples. Finally, if hexavalent chromium is expected to be found bound to particulates, samples may be collected on pre-weighed filters, with or without the use of cyclones (to distinguish respirable from non-respirable particles). The methods cited below are the most widely used at present.

1. Colorimetric Tubes: This commonly utilized direct monitoring technique is the fastest and cheapest means of evaluating chromic acid mist air levels. It is usually employed as an area monitoring technique, but may be modified for use as a personal monitoring technique. According to a major manufacturer of these “detector tubes,” the principle is the following. A chemical reagent system is housed in a closed glass tube and reacts by changing colour when brought into contact with a gas or vapour. The concentration of the substance is characterized by the length of discoloration. The air concentration can be read off directly from a scale printed on the glass tube. Different amounts of air must be drawn through the tube, depending on the type and sensitivity of the reagent systems. This method is not the most sensitive for chromic acid but may be useful for screening purposes (i.e., the detection limit ranges from 0.1 to 0.5 mg/m^3). Samples should be collected near the source, and at intervals away from the source.

Table 6-6. Occupational Sampling Methods Relevant to Chromium Plating

Parameter	Analytical Method	Sample Type
Chromium, Total	NIOSH 7024	Cellulose filter, 100 L
Chromium, Hexavalent	NIOSH 7600	PVC filter, 200 L
Chromium, Hexavalent	NIOSH 7604	PVC filter, 500 L
Halogenated Hydrocarbons, including TCA	NISH 1003	Solid sorbent tube (coconut shell carbon)
Alkaline Dusts, including NaOH, KOH, and basic salts	NIOSH 7401	PTFE filter, 360 L
Inorganic Acids, including HCl, HNO3, H2SO4	NISH 7903	Solid sorbent tube (silica gel with GFF plug), 50 L
Cadmium	NIOSH 7048	Cellulose ester filter, 25 L
Copper, Dust, and Fume	NIOSH 7029	Cellulose ester flter, 100 L
Chromic Acid/Chromate	NIOSH	PVC filter
Chromic Acid	Draeger Tube #6728681	Detector tube
Nickel	Draeger Tube #6728871	Detector tube
Inorganic Fumes	Draeger Tube #8101735	Detector tube
Trichloroethane	Draeger Tube #CH21101	Detector tube
Hydrochloric Acid/Nitric Acid	Draeger Tube #81 01681	Reactive tube
Volatile Organic Compounds in Indoor Air	EPA IP-1B	Solid adsorbent tube (Tenax®)
Reactive Acidic and Basic Gases in Indoor Air	EPA IP-9	Annular denuder impactor

2. Total Hexavalent Chromium Measurements

a. ASTM D-5281-92. Standard Test Method for Collection and Analysis of Hexavalent Chromium in Ambient, Workplace, or Indoor Atmospheres.

Collection into an alkaline buffer solution contained in a triple impinger sampling train filled with $NaHCO_3$ buffer (pH=8.2). Chromium is reacted with phenylcarbohydrazide complex (violet color) and analyzed via ion chromatography (absorbance 520 nm).

b. NIOSH Methods:

(i) NIOSH. (1984). Method 7600. NIOSH Manual of Analytical Methods, Third edition. Cincinnati, OH.

(ii) NIOSH. (1994). Method 7604. NIOSH Manual of Analytical Methods, Fourth edition. Cincinnati, OH.

Method 7604 uses a 5 : M polyvinyl chloride filter connected via Tygon tubing to personal sampling pumps. The minimum air volume required is 100 Liters, and the recommended flow rate is from 1 to 4 L/min. The working range is 0.01 to 4 mg/m^3 for a 500 L air sample. Analysis is by ion chromatography with conductivity detection. An earlier method (Method 7600) analyzes hexavalent chromium via visible absorption spectrophotometry after reaction with s-diphenylcarbazide. The limit of detection is 500 ng/m^3; although this method is widely used, it is generally affirmed that the method sensitivity is inadequate.

c. Modified NIOSH Method 7600: To improve analytical sensitivity:

(i) Paustenbach DJ, Meyer DM, Sheehan PJ, Lau V. (1991). "An assessment and quantitative uncertainty analysis of the health risks to workers exposed to chromium contaminated soils." *Toxicol. Indust. Health* 7(3):159-196.

"PVC filters have been extracted with 0.02 N sodium bicarbonate solution rather than digested with a strong alkaline solution. The extract was filtered, and the filtrate then preconcentrated through injection onto [an] ion chromatography separation column. The eluted hexavalent chromium concentrations were quantified using Visible Absorption Spectroscopy (VAS). Using this modified procedure, the limit of detection (LOD) was reduced from 500 ng/m^3 to 1 ng/m^3..."

(ii) Gianello G, Masci O, Carelli G, Vinci F, Castellino N. (1998). Occupational exposure to chromium: An assessment of environmental pollution levels and biological monitoring of exposed workers. *Indust. Health* 36:74-77.

These authors reported that they extracted PVC filters with nitric acid, but analyzed using graphite furnace atomic absorption spectrophotometry, avoiding analytical interference problems.

(iii) California Air Resources Board (1985). "Draft ADDL006 Method for the Speciation and Analysis of Hexavalent Chromium at Ambient Atmospheric Levels," in the State of California Air Resources Board Public Hearing to Consider the Adoption of a Regulatory Assessment Identifying Hexavalent Chromium as a Toxic Air Contaminant.

California Air Resources Board (1986). "Standard Operating Procedure for the Speciation and Analysis of Hexavalent Chromium at Ambient Atmospheric Levels," Method ADDL006 California Air Resources Board, Monitoring and Laboratory Division

RTI (1988), "The Fate of Hexavalent Chromium in the Atmosphere," [RTI/3798/00-01F]. Research Triangle Institute, Research Triangle Park, NC. Prepared under CARB contract A6-096-32 for the California Air Resources Board, Sacramento, CA.

Paustenbach et al. (1991). cite these sources, referring to them collectively as the "RTI/CARB method," and the basis for their monitoring methodology. CARB method ADDL006 collects sample on PVC membranes, and uses either graphite furnace atomic absorption or ion chromatography for analysis. [The latter is slightly more sensitive.] However, collection on PVC membranes has been found to result in loss of more than 50 percent over a 24-hour period of the Cr+6 species via reduction to Cr+3. Use of impingers for sampling is therefore recommended.

3. Particle size distribution methods

Kuo HW, Lai JS, Lin TI. (1997a). Concentration and size distribution of airborne hexavalent chromium in electroplating factories. *AIHA J*. 58:29-32.

To distinguish respirable from non-respirable chromium particulates, authors used "a particle fractionating sampler (Andersen Samplers, Inc.) with six aluminum stages. The sampler can detect chromium aerosol particles ranging in size from 0.65 µm to 7 µm. The impactor has cut points at 0.65, 1.1, 2.1, 3.3, 4.7, and 7.0 uM. The polyvinyl chloride filter has an 81-mm diameter, and the flow rate is 28.3 L/min. The total sampling time was six hours." Analysis was performed in accordance with NIOSH 7600/7604.

6.3.3.2. *Methods with Application to Stack Sampling*

The Office of Air Quality, Planning and Standards (OAQPS) lists four methods relevant to hexavalent chromium stack monitoring. These methods are available via the Internet at: *http://www.epa.gov/ttn/emc/promgate.html* (USEPA 2000). A selection of other methods of relevance to chromium plating are listed in Table 6-7.

Table 6-7. Stack Sampling Methods Relevant to Chromium Plating

Parameter	Method
Metals	EPA Modified Method 5
HCl	BIF 0500 or Method 5
VOCs	BIF 0030; ambient air method TO-14 passivated SUMMA canister grab samples may also be appropriate
SO_x, NO_x, O_2, CO_2, CO	Continuous Emissions Monitoring
Gas Velocity and Temperature	EPA Method 1A

1. EPA. Method 306 - Determination of Chromium Emissions from Decorative and Hard Chromium Electroplating and Chromium Anodizing Operations - Isokinetic Method.

This method is applicable "to the determination of chromium (Cr) emissions from decorative and hard chromium electroplating facilities, chromium anodizing operations, and continuous chromium plating operations at iron and steel facilities."

In this method, "an emission sample is extracted isokinetically from the source using an unheated Method 5 (see below) sampling train [40 CFR Part 60, Appendix A], with a glass nozzle and probe liner, but with the filter omitted. The sample time shall be at least two hours. The Cr emissions are collected in an alkaline solution containing 0.1 N sodium hydroxide (NaOH) or 0.1 N sodium bicarbonate (NaHCO3). The collected samples are recovered using an alkaline solution and ....[analyzed via one of three methods, depending on the amount of Cr in the sample. These are: (i) for samples with high Cr (>35 ：g/L), inductively-coupled plasma emission spectrometry (ICP), (ii) for samples with lower Cr (<35 ：g/L), graphite furnace atomic absorption spectrometry (GFAAS), or (iii) to isolate hexavalent Cr^{+6} concentrations, ion chromatography with a post-column reactor (IC/PCR)]."

NOTE: EPA notes that because "particulate matter is not usually present at chromium electroplating and/or chromium anodizing operations, it is not necessary to filter the Cr^{+6} samples unless there is observed sediment in the collected solutions. If it is necessary to filter the Cr^{+6} solutions, please refer to Method 0061, Determination of Hexavalent Chromium Emissions from Stationary Sources, Section 7.4, Sample Preparation in SW-846."

NOTE: EPA strongly recommends familiarity with EPA Methods 5 and 29 before Method 306 is used.

2. EPA. Method 5 - Determination of Particulate Matter: Emissions from Stationary Sources.

3. EPA. Method 29 - Determination of Metals Emissions from Stationary Sources. This method analyzes for 17 metallic species. Modifications of the method also allow sampling and analysis of particulate species to be performed at the same time. EPA summarizes the method as follows:

"A stack sample is withdrawn isokinetically from the source, particulate emissions are collected in the probe and on a heated filter, and gaseous emissions are then collected in an aqueous acidic solution of hydrogen peroxide (analyzed for all metals including Hg) and an aqueous acidic solution of potassium permanganate (analyzed only for Hg). The recovered samples are digested, and appropriate fractions are analyzed for Hg by cold vapor atomic absorption spectroscopy (CVAAS) and for Sb, As, Ba, Be, Cd, Cr, Co, Cu, Pb, Mn, Ni, P, Se, Ag, Tl, and Zn by inductively coupled argon plasma emission spectroscopy (ICAP) or atomic absorption spectroscopy (AAS). Graphite furnace atomic absorption spectroscopy (GFAAS) is used for analysis of Sb, As, Cd, Co, Pb, Se, and Tl if these elements require greater analytical sensitivity than can be obtained by ICAP. If one so chooses, AAS may be used for analysis of all listed metals if the resulting in-stack method detection limits meet the goal of the testing program. Similarly, inductively coupled plasma-mass spectroscopy

(ICP-MS) may be used for analysis of Sb, As, Ba, Be, Cd, Cr, Co, Cu, Pb, Mn, Ni, Ag, Tl and Zn."

6.3.3.3. *Methods Applicable to Ambient Air Monitoring*

In ambient air, the levels of hexavalent chromium encountered are typically much less than those found in occupational settings or near industrial sources. Longer sampling times/volumes and special sampling considerations are therefore required to achieve measurable detections.

1. EPA. Method 306 A - Determination of Chromium Emissions from Decorative and Hard Chromium Electroplating and Chromium Anodizing Operations - (a less expensive, less complex, alternative method, uses the same analytical procedures described in Method 306. The method is referred to as the "Mason Jar" method.

   NOTE: EPA strongly recommends familiarity with the EPA Methods 5 and 29 before Method 306A is used.

2. California Air Resources Board (1985). "Draft ADDL006 Method for the Speciation and Analysis of Hexavalent Chromium at Ambient Atmospheric Levels," in the State of California Air Resources Board Public Hearing to Consider the Adoption of a Regulatory Assessment Identifying Hexavalent Chromium as a Toxic Air Contaminant.

   California Air Resources Board (1986). "Standard Operating Procedure for the Speciation and Analysis of Hexavalent Chromium at Ambient Atmospheric Levels," Method ADDL006 California Air Resources Board, Monitoring and Laboratory Division

   RTI (1988), "The Fate of Hexavalent Chromium in the Atmosphere," [RTI/3798/00-01F]. Research Triangle Institute, Research Triangle Park, NC. Prepared under CARB contract A6-096-32 for the California Air Resources Board, Sacramento, CA.

   The RTI/CARB method ADDL006 involves sample collection on PVC membranes, complexation of Cr^{+6}, followed by isolation and acid digestion of the complex. Analysis is via graphite furnace atomic absorption (or alternatively, via ion chromatography). It is capable of detecting atmospheric levels of Cr^{+6} of 0.5 ng/m^3, at sampling rates of 10 liters per minute over a 24-hour period. However, due to concerns about Cr^{+6} conversion to Cr^{+3}, impinger methods are generally recommended.

3. Respirable Ambient Particulate Levels:

   Sheehan P, Ricks R, Ripple S, Paustenbach D. (1992). Field evaluation of a sampling and analytical method for environmental levels of airborne hexavalent chromium. *Am Ind Hyg Assoc J* 53(1):57-68.

Particularly useful for long-term (i.e., 24 hours). This method is a modification of both EPA Method 5 and the California Air Resources Board (RTI/CARB) method. The method utilizes a triple impinger system with sample collection into 0.02 N $NaHCO_3$ buffer. The apparatus may be set up at 5 to 6 feet above the ground surface to approximate the human breathing zone. The LOD is 0.1 ng/m^3, with analysis via ion chromatography. To sample respirable particles, a cyclone pre-separator may be attached to the inlet port.

6.4. REFERENCES

Almaguer, D.; R.S. Kramkowski; P. Orris. 1984. Health hazard evaluation report HETA 83-296-1491, Johnson Controls, Inc., Watertown, Wisconsin. 1192745. National Institute for Occupational Safety and Health (NIOSH). NTIS - PB85-220986.

ASTM (American Society for Testing and Materials). 1992. Standard test method for collection and analysis of hexavalent chromium in ambient, workplace, or indoor atmospheres. Philadelphia, PA. ASTM Standard No. D-5281-92.

California Air Resources Board (CARB). 1985. DRAFT ADDL006 Method for the Speciation and Analysis of Hexavalent Chromium at Ambient Atmospheric Levels.

California Air Resources Board (CARB). 1986. Standard Operating Procedure for the Speciation and Analysis of Hexavalent Chromium at Ambient Atmospheric Levels.

California Air Resources Board (CARB). 1999. Statewide toxics summary. Provided by M. Redgrave, CARB, to M. Lorber, U.S. EPA, October 22, 1999.

Draeger Safety, Inc. 1999. Product catalog. Pittsburgh, PA.

Falerios, M.; Schild, K.; Sheehan, P.; Paustenbach, D.J. 1992. Airborne concentrations of trivalent and hexavalent chromium from contaminated soils at unpaved and partially paved commercial/industrial sites. J. Air & Waste Mgmt Assoc. 42: 40-48.

Gianello, G.; Masci, O.; Carelli, G.; Vinci, F.; Castallino, N. 1998. Occupational exposure to chromium: an assessment of environmental pollution levels and biological monitoring of exposed workers. Indust. Health. 36:74-77.

Hervin, R.L.; J.W. Cormer; G.W. Butler 1974. Health hazard evaluation/toxicity determination report 74-2/8-164, The Vendo Company, Kansas City, Missouri (Final Report). National Institute for Occupational Safety and Health (NIOSH). NTIS-PB246479.

Kiilunen, M. 1994. Occupational Exposure to Chromium and Nickel in Finland - analysis of registries of hygienic measurements and biological monitoring. Ann. Occup. Hyg. 38(2):171-187.

Kuo, H.W.; J.S. Lai; T.I. Lin. 1997a. Concentration and size distribution of airborne hexavalent chromium in electroplating facilities. American Industrial Hygiene Association Journal. 58:29-32.

Kuo H.W. ; J.S. Lai; T.I. Lin. 1997b. Nasal septum lesions and lung function in workers exposed to chromic acid in electroplating factories. Int. Arch. Occup. Environ. Health. 70(4):272-276.

Lin S.C.; C.C. Tai; C.C. Chan; J.D. Wang. 1994. Nasal septum lesions caused by chromium exposure among chromium electroplating workers. Am. J. Ind. Med. 26(2):221-228.

Liu, C. S.; H.W. Kuo; J.S. Lai; T.I. Lin. 1998. Urinary N-acetyl-B-glucosaminidase as an indicator of renal dysfunction in electroplating workers. Int. Arch. Occup. Health. 71:348:-352.

NIOSH. 1984. NIOSH manual of analytical methods. Third edition. Cincinnati, OH.

NIOSH. 1994. NIOSH manual of analytical methods. Fourth edition. Cincinnati, OH.

Paustenbach, D.J., D. M. Meyer, P. J. Sheehan, V. Lau. 1991. An assessment and quantitative uncertainty analysis of the health risks to workers exposed to chromium contaminated soils. Tox. & Ind. Health. 7:159-196.

Research Triangle Institute (RTI). 1988. The fate of hexavalent chromium in the atmosphere. Prepared by the Research Triangle Institute for California Air Resources Board under Contract No. A6-096-32. October, 1988.

Sheehan, P.; Ricks, R.; Ripple, S.; Paustenbach, D. 1992. Field evaluation of a sampling and analytical method for environmental levels of airborne hexavalent chromium. Am. Ind. Hyg. Assoc. J. 53(1):57-68.

U.S. EPA. 1994. Guidance for the data quality objectives process. Washington, DC: Office of Research and Development. EPA/600/R-96/055.

U.S. EPA. 1998. Series 875 occupational and residential exposure test guidelines: part B postapplication exposure monitoring test guideline 875.2000. Washington, DC: Office of Pollution Prevention and Toxic Substances.

U.S. EPA. 2000. EMC-CFR promulgated test methods. Washington, DC: Office of Air Quality Planning and Standards. *http://www.epa.gov/ttn/emc/promgate.html*.

United States
Environmental Protection Agency/ORD
National Center for
Environmental Assessment
Washington, DC 20460

Please make all necessary changes on the below label, detach or copy, and return to the address in the upper left-hand corner.

If you do not wish to receive these reports CHECK HERE ☐, detach, or copy this cover, and return to the address in the upper left-hand corner.

PRESORTED STANDARD
POSTAGE & FEES PAID
EPA
PERMIT No. G-35

Official Business
Penalty for Private use
$300

EPA/600/R-01/057

APPENDIX

User's Guide for MFFRST

User's Guide for Metal Finishing Facility Risk Screening Tool (MFFRST)

MFFRST is a computer tool that enables anyone to perform a screening characterization of health risks to workers and neighbors of metal finishing facilities. It was developed by EPA under the Common Sense Initiative Metal Finishing Sector. It estimates the likelihood that adverse human health effects will result from exposures to chemicals emitted into the air by a metal finishing facility.

A.1. MFFRST Installation

A.1.1 Hardware / Software Requirements

In order to function properly, MFFRST must be installed on a system with the following minimum requirements:

1. Windows 95;
2. Pentium processor;
3. 16Mb of RAM;
4. 10Mb of available space on the drive where the software is to be installed;
5. A monitor with 800 x 600 resolution. (NOTE: Monitors with lower resolutions will be able to run MFFRST. However, the MFFRST screens will overrun the boundaries of the monitor, resulting in scroll bars which may not be able to depict all of a screen.

A.1.2 Installing MFFRST

To install MFFRST, follow these instructions:

1. Insert the CD or Diskette Number 1 into the appropriate drive.
2. Push the Windows Start button and select Run.
3. In the Open text box enter
   [drive]:\setup.exe
   where [drive] is the letter for the CD or disk drive from Step 1.

At this point the MFFRST Installation software should start loading. After the required information has been input, MFFRST will be installed to the appropriate location. The final step is to install the Borland Database Engine (BDE).

A.1.3 Borland Database Engine (BDE)

The Borland Database Engine (BDE) is free software which allows MFFRST to communicate with the dBase files used for storage purposes. This software must be loaded in order to run MFFRST. The software should begin to load automatically after installing MFFRST. If it does not, follow these instructions:

1. Push the Windows Start button and select Run.
2. In the Open text box enter
   [drive]:\[directory]\idapi\setup.exe

where [drive] and [directory] are the location where MFFRST was installed.

The BDE Installation package should begin to install the BDE software on your system. Follow the prompts and input the requested information.

A.2. Using MFFRST

A.2.1 Running MFFRST Simulations

MFFRST provides four options for characterizing metal finishing sources:

- use information for a nearby facility;
- use information for a generic metal finishing line;
- use information based on the user's knowledge of process lines; and
- use known concentrations of chemicals in the ambient air.

The user will be presented with these options after starting MFFRST and moving through the first five introductory screens.

A.2.2 MFFRST Menu Features

A.2.2.1 Saving Files

The user is prompted before calculations are run to save the data they have entered. The user can save their data at any point in a model run by selecting the Save option under the File menu.

A.2.2.2 Opening Files

If the user has saved an MFFRST run and wishes to reopen it in MFFRST, the user can do this by going to the MFFRST Simulation Selection screen. Towards the bottom of the screen, the "Opening a previously saved scenario" button allows the user to open MFFRST files.

A.2.2.3 Printing

The user can print the screens they are viewing and can print their results by selecting the "Print - Screen" and "Print - Results" options under the File menu.

A.2.2.4 About Menu

The About menu provides the user with the ability to access the MFFRST Help screens and information about the version of MFFRST they are working with.

A.2.2.5 Navigator Menu

The Navigator menu is meant to give users a flexible means for maneuvering around in MFFRST. The screens have been broken down into six categories, each a submenu of the Navigator menu. When the user arrives at a particular screen, selecting the Navigator menu will let the user

know the category of the screen by placing a checkmark next to the appropriate category. To transfer to a different screen, the user selects a category from the Navigator menu. If the desired screen is in the same category as the one currently displayed, the user will have to navigate to the desired screen using the Next or Back buttons. The available categories are: Scenario Selection, Chemicals /Concentrations, Facility Inputs, Exposure Inputs, Input Summary, and Results.

A.3. Data Storage and MFFRST Databases

MFFRST uses dBase files to store default data for TRI emissions, the metal finishing plating process lines and tanks, toxicity data and MFFRST scenario inputs and results. The user must use dBase III or higher, or a comparable database software package that can open and save files in the dBase format, in order to alter any of the data in these databases. It is suggested that the user make copies of the original databases and place them in a temporary directory where they will not be affected. The names of the databases listed below must remain the same, otherwise MFFRST will not be able to locate the appropriate data.

A.3.1 TRI Databases

Listed below are the data structures for the two databases (DEFFAC.DBF and DEFEMIS.DBF) which store data for TRI emissions.

Table A-1. Structure for DEFFAC.DBF

Field Name	**Field Descriptor**	**Field Type**	**Width / Decimal**
TRI	Facility Identification Number	Text	20
NAME	Facility Name	Text	100
ADDRESS	Facility Street Address	Text	150
CITY	Facility City	Text	75
COUNTY	Facility County	Text	75
STATE	Facility State	Text	2
STK_HT	Stack Height (in feet)	Number (Double)	20/5
STK_DIAM	Stack Diameter (in feet)	Number (Double)	20/5
STK_VEL	Stack Exit Gas Velocity (in feet/sec)	Number (Double)	20/5
STK_TEMP	Stack Exit Gas Temperature (in Farenheit)	Number (Double)	20/5

Table A-2. Example of a Record in DEFFAC.DBF

Field Name	Data
TRI	36201NDSTR13THS
NAME	Industrial Plating Co. Inc.
ADDRESS	13th St. & Clydesdale Ave.
CITY	Anniston
COUNTY	Calhoun
STATE	AL
STK_HT	-99
STK_DIAM	-99
STK_VEL	-99
STK_TEMP	-99

Table A-3. Structure for DEFEMIS.DBF

Field Name	Field Description	Field Type	Width / Decimal
TRI	Facility Identification Number	Text	20
PARAM_CD	Parameter Code	Text	3
CASNUM	CAS Number	Text	9
CHEMICAL	Chemical Name	Text	75
EMISSION	Air Emission (lbs/yr)	Number (Double)	20/5
MEDIA	Release Media (always “AIR”)	Text	10

Table A-4. Example of a Record in DEFEMIS.DBF

Field Name	Data
TRI	36201NDSTR13THS
PARAM_CD	5a1
CASNUM	7440473
CHEMICAL	Chromium compounds
EMISSION	500
MEDIA	AIR

For large amounts of data, the user can either append their data to the aforementioned files, or restructure their data to mirror the format of these files and replace the two TRI dBase files. The user must ensure that for every facility identification number (TRI field) listed in the DEFEMIS.DBF file, that an associated record with the same identification number is located in the DEFFAC.DBF file. The user must enter data into the State and County fields, otherwise MFFRST will not be able to show the facility properly. If stack data is not available, the user can enter 0 or -99 in the missing fields and MFFRST will use the default parameters. Toxicity data may need to

be updated for releases of chemicals not available in MFFRST. A user can model up to 25 chemicals per site. For more information on this and how to fill in the the parameter code field, please refer to the Section A.3.3.

A.3.2 Generic Process and Tank Database

MFFRST uses one database file (PROC.DBF) to store default values for generic process and tank inputs. In general, MFFRST allows the user to construct user-defined process lines and tanks by selecting the User-defined Scenario option. However, if the user has a particular process line or tank that is used often, the user can enter this information into the PROC.DBF file and MFFRST will allow the user to select it. The structure for PROC.DBF is depicted in Table A-5. There are some important issues and limitations to process line and tank data that must be observed in MFFRST. These issues are discussed in the next two sections.

Table A-5. Structure for PROC.DBF

Field Name	Field Description	Field Type	Width / Decimal
PROCESS	Process Name	Text	50
PROC_CODE	Process Code	Number (Integer)	2
TNK_SEL	Tank Selected? (1-yes, 0-no)	Number (Integer)	1
TNK_ORDER	Tank Order	Number (Integer)	1
TNK_NAME	Tank Name	Text	35
TNK_CODE	Tank Code	Number (Integer)	4
TNK_TYPE	Tank Type (e,n,v,o)*	Text	1
PARMCD	Parameter Code	Text	3
CASNUM	CAS Number (only applicable to chemicals)	Text	9
PARAM	Parameter Name	Text	50
VALUE	Default Value of Parameter	Number (Double)	20/10
UNITS	Units for Default Value	Text	12
ACONC	Air Concentration	Number (Double)	20/10
ACONC_UNIT	Units for Air Concentration	Text	10
ACONC_CALC	Air Concentration Calculated? (c-calculated, e-estimated by user)	Text	1
AUCE	Uncontrolled Emission Value	Number (Double)	20/10
AUCE_UNIT	Units for Uncontrolled Emission	Text	10
AUCE_CALC	Uncontrolled Emission Calculated? (c-calculated, e-estimated by user)	Text	1
ACE	Controlled Emission	Number (Double)	20/10
ACE_UNIT	Units for Controlled Emission	Text	10
ACE_CALC	Controlled Emission Calculated? (c-calculated, e-estimated by user)	Text	1
CONC_RES	Exposure Concentration - Resident	Number (Double)	20/10
LADD_RES	Lifetime Average Daily Dose - Residential	Number (Double)	20/10
ADD_RES	Average Daily Dose - Residential	Number (Double)	20/10

Field Name	Field Description	Field Type	Width / Decimal
RISK_RES	Risk - Resident	Number (Double)	20/10
HI_RES	Hazard Index - Resident	Number (Double)	20/10
CONC_PW	Exposure Concentration - Process Worker	Number (Double)	20/10
LADD_PW	Lifetime Average Daily Dose - Process Worker	Number (Double)	20/10
ADD_PW	Average Daily Dose - Process Worker	Number (Double)	20/10
RISK_PW	Risk - Process Worker	Number (Double)	20/10
HI_PW	Hazard Index - Process Worker	Number (Double)	20/10
CONC_NPW	Exposure Concentration - Non-process Worker	Number (Double)	20/10
LADD_NPW	Lifetime Average Daily Dose - Non-process Worker	Number (Double)	20/10
ADD_NPW	Average Daily Dose - Non-process Worker	Number (Double)	20/10
RISK_NPW	Risk - Non-process Worker	Number (Double)	20/10
HI_NPW	Hazard Index - Non-process Worker	Number (Double)	20/10

* - ‘e’ - electrolytic tank; ‘n’ - non-electrolytic tank; ‘v’ - solvent degreasing tank; ‘o’ - other tank.

Table A-6. Example of a Record in PROC.DBF

Field Name	Data
PROCESS	Hard Chormium Plating
PROC_CODE	0
TNK_SEL	1
TNK_ORDER	2
TNK_NAME	Alkaline Cleaner
TNK_CODE	1601
TNK_TYPE	n
PARMCD	4c1
CASNUM	6834920
PARAM	Sodium metasilicate
VALUE	25
UNITS	g/L
ACONC	0
ACONC_UNIT	mg/cu m
ACONC_CALC	c
AUCE	0
AUCE_UNIT	mg/day
AUCE_CALC	c
ACE	0
ACE_UNIT	mg/day
ACE_CALC	c
CONC_RES	0
LADD_RES	0
ADD_RES	0

Field Name	Data
RISK_RES	0
HI_RES	0
CONC_PW	0
LADD_PW	0
ADD_PW	0
RISK_PW	0
HI_PW	0
CONC_NPW	0
LADD_NPW	0
ADD_NPW	0
RISK_NPW	0
HI_NPW	0

A.3.2.1 Add a User-defined Process Line

The user can use any name for a process line, except for process line descriptions that have already been used. The process code field (PROC_CODE) should contain the next sequential integer value for the process line. For example, there are currently seventeen process lines defined in MFFRST. The process code for the next process line entered by a user should be 17. The process code for the next process line after this should be numbered 18, and so on.

The maximum number of tanks for a process is 9. All tanks for a particular process should be given the same process code. The tank selection field (TNK_SEL) should always be 1 for newly entered processes. Tanks should be sequentially numbered in the order of their appearance, placing the information in the field TNK_ORDER, starting with the value 1 for the first tank. A user can model up to 25 chemicals per model run. For more information on tank input data, please refer to the Section A.3.2.2.

A.3.2.2 Add a User-defined Tank

When adding a a user-defined tank to the PROC.DBF file, the user should enter the process description and the process code into the appropriate fields. Please refer to the description above for entries into these fields. Tank names should be unique. Do not use existing tank names. If the user is adding a tank to an existing process, the new tank should be given a tank order number one greater than the last tank for that process. For example, if a user wished to add a tank to the Hard Chrome Plating process, the new tank would have a tank order number of 6 (i.e. TNK_ORDER=6). For a new, user-defined tank for a new process, the tank order field should start with 1 for the first tank, and subsequently number any other tanks. The tank selection field (TNK_SEL) should always be 1 for newly entered tanks.

Tanks can only be classified as electrolytic, non-electrolytic, solvent degreaser, or other. The user designates the type of tank in the TNK_TYPE field as either “e” (electrolytic), “n” (non-electrolytic), “v” (solvent degreaser), or “o” (other). The parameters required for modeling the emissions from the different types of tanks can be seen in Tables A-7 - A-9 below. If any of the parameters below are missing, MFFRST will generate an error and not perform properly. Tanks

classified as “other”, in general, do not have air emissions. As a result, MFFRST will not calculate results from these tanks. It is up to the user to provide tank concentrations and uncontrolled emission levels for these tanks.

Table A-7. Required Parameters for Electrolytic Tanks

Parameter	Parameter Code
Current density	1a6
Cathode efficiency	1b7
Surface area	1c9
Exhaust flow	2a8
PCD Abbreviation	3a
Chemicals of Concern	Situation dependent

Table A-8. Parameters for Non-electrolytic Tanks

Parameter	Parameter Code
Surface area	1a9
Average bubble radius	1b4
Surface tension	1cb
Aeration volume	1da
Exhaust flow	2a8
PCD Abbreviation	3a
Chemicals of Concern	Situation dependent

Table A-9. Parameters for Solvent Degreasing Tanks

Parameter	Parameter Code
Surface area	1c9
Exhaust flow	2a8
PCD Abbreviation	3a
Chemicals of Concern	Situation dependent

Tanks already defined in MFFRST have been given four digit tank codes located in the TNK_CODE field. MFFRST uses this tank code to display the proper tank graphic. The tank codes depicted in Table A-10 should be used for tanks already defined in MFFRST. For tanks that have not been previously defined in MFFRST, a tank code of 1627 should be used.

Table A-10. Tank Codes

Tank Name	Tank Code
Alkaline Cleaner	1601
Vapor Degreaser	1603
Chromium (Cr+6) Plating	1604
Acid Etching	1605
Copper Strike	1606
Gold Plating	1607
Activation	1608
Cadmium Plating	1609
Chromium (Cr+3) Plating	1610
Chromium (Cr+6) Passivation	1611
Silver Strike	1612
Silver Plating	1613
Zinc Plating	1614
Smut Removal	1615
Phosphatizing Tank	1616
Chromium Conversion	1617
Copper Plating	1618
Nickel Plating	1619
Anodizing	1620
Coloring Pigment	1621
Sealant	1622
Gold Strike	1623
Electrocleaning	1624
Acid Desmut/Deoxide	1625
Nickel Underplating	1626
User-defined Tank	1627

Parameter codes stored in the PROC.DBF are very important. MFFRST uses the first character of these codes to identify parameters used in calculating uncontrolled emissions (1), exhaust flow (2), pollution control devices (PCDs) (3), and chemicals of concern (4-6). The first character for chemicals of concern can be a 4 for typical MFFRST chemicals, a 5 for chemicals specific to TRI emissions, or a 6 for user-defined chemicals. The second character for parameters other than chemicals is used for appearance purposes in MFFRST, to order the parameters in a particular way. For chemicals of concern, the second character of the parameter code is used to identify carcinogens (a), systemic toxicants (b), or other types of chemicals (c). The third character identifies the types of units that MFFRST should show for the parameter. The character code and unit type are shown in Table A-11. No other codes should be used in the third position except those listed. Codes for particular chemicals of concern can be obtained from the toxicity database

discussed below. If the chemical of concern is not listed in the toxicity database, the user will have to enter the appropriate chemical toxicity data in order for MFFRST to model exposure.

Table A-11. Third Character in Parameter Code and the Associated Units Type

Code	Unit Type
0	Air Concentration (i.e., mg/cu m)
1	Liquid Concentration (i.e., mg/L)
2	Solid Concentration (i.e., mg/kg) (not used)
3	Temperature (i.e., C)
4	Distance (i.e., m)
5	Velocity (i.e., m/s)
6	Current Density (i.e., A/sq in)
7	Cathode Efficiency (i.e., %)
8	Volumetric Flowrate (i.e., cu ft/min)
9	Area (i.e., sq ft)
a	Volume of aeration air (i.e., cfm/sq ft)
b	Surface Tension (i.e., dyne/cm)
c	Mass Flowrate (i.e., g/s)

For chemicals, the user should input CAS numbers if they are available. For all other parameters, the user should enter a 0 in the CAS number field. Values for the remaining fields in the PROC.DBF file should be set to the following values.

Table A-12. Remaining Tank Field Values

Field	Value
ACONC	0
ACONC_UNIT	mg/cu m
ACONC_CALC	c
AUCE	0
AUCE_UNIT	mg/day
AUCE_CALC	c
ACE	0
ACE_UNIT	mg/day
ACE_CALC	c

Field	Value
CONC_RES	0
LADD_RES	0
ADD_RES	0
RISK_RES	0
HI_RES	0
CONC_PW	0
LADD_PW	0
ADD_PW	0
RISK_PW	0
HI_PW	0
CONC_NPW	0
LADD_NPW	0
ADD_NPW	0
RISK_NPW	0
HI_NPW	0

A.3.3 Chemical Toxicity Database

Default toxicity data for MFFRST is contained in the TOX.DBF file. The user can change this data during a run by pushing the Revise Chemical button on a number of screens. However, if the user wants to change the default toxicity values for a chemical permanently, or wishes to add a new chemical, the TOX.DBF database can be modified. The structure for the toxicity database is shown in Table A-13.

Table A-13. Structure for TOX.DBF

Field Name	Field Description	Field Type	Width / Decimal
PARAM_CODE	Parameter Code	Text	3
CASNUM	CAS Number	Text	9
CHEMNAME	Chemical Name	Text	50
UNIT_CAR	Unit risk	Number (Double)	15/8
RFC	Reference Concentration	Number (Double)	15/8
CSF	Slope Factor	Number (Double)	15/8
PEL	Permissible Exposure Limit	Number (Double)	15/8
RBC	Risk Based Concentration	Number (Double)	15/8
MRL	Minimal Risk Level	Number (Double)	15/8
TLV	Threshold Limit Value	Number (Double)	15/8
REL	Recommended Exposure Limit	Number (Double)	15/8

Table A-14. Example of a Record in TOX.DBF

Field Name	Data
PARAM_CODE	4a1
CASNUM	18540299
CHEMNAME	Chromium (Cr+6)
UNIT_CAR	12
RFC	0.000008
CSF	42
PEL	0
RBC	0.00000015
MRL	0
TLV	0.05
REL	0.001

The PARAM_CODE field is very important. MFFRST calculates releases and exposures to chemicals differently based on this field. The first character for the code should be a 4 for MFFRST typical chemicals or a 5 for chemicals specific to TRI emissions. The second character of the parameter code is used to identify carcinogens (a), systemic toxicants (b), or other types of chemicals (c). The third character identifies the types of units that MFFRST should show for the parameter. This should be set to 1.

Other fields should be filled in where appropriate and available.