NAVFAC
Naval Facilities Engineering Command
NAVFAC MARIANAS

FINAL
RFP SUBMITTAL

26 APRIL 2012

RFP DOCUMENTS

FY12MCAF SAKW 059101
REDHORSE CANTONMENT
OPERATIONS FACILITY

PREPARED BY:

N.C. Macario & Associates, Inc.
270 Guerrero Drive
Tamuning, Guam 96913
Phone (671) 646-0947/48
Fax (671) 646-0901

TABLE OF CONTENTS (RFP Parts 1-6)

1. PART 1 – PROPOSAL FORM FORMS AND DOCUMENTS

-- Not used --

2. PART 2 – GENERAL REQUIREMENTS

01 11 00.00 00 SUMMARY OF WORK
01 14 00.05 20 WORK RESTRICTIONS FOR DESIGN-BUILD
01 20 00.05 20 PRICE AND PAYMENT PROCEDURES FOR DESIGN-BUILD
01 30 00.05 20 ADMINISTRATIVE REQUIREMENTS FOR DESIGN-BUILD
01 31 19.05 20 POST AWARD MEETINGS
01 32 16.05 20 DESIGN AND CONSTRUCTION PROGRESS DOCUMENTATION]
01 32 17.05 20 NETWORK ANALYSIS SCHEDULES (NAS) FOR DESIGN-BUILD
01 33 00.05 20 CONSTRUCTION SUBMITTAL PROCEDURES
01 33 10.05 20 DESIGN SUBMITTAL PROCEDURES
01 35 26.05 20 GOVERNMENT SAFETY REQUIREMENTS FOR DESIGN-BUILD
01 45 00.05 20 DESIGN AND CONSTRUCTION QUALITY CONTROL
01 50 00.05 20 TEMPORARY FACILITIES AND CONTROLS FOR DESIGN-BUILD
01 57 19.00 20 TEMPORARY ENVIRONMENTAL CONTROLS
01 74 19.05 20 CONSTRUCTION AND DEMOLITION WASTE MANAGEMENT FOR DESIGN-BUILD
01 78 24.05 20 FACILITY OPERATION AND MAINTENANCE SUPPORT INFORMATION

3. PART 3 – PROJECT PROGRAM

CHAPTER 1 & 2. PROJECT DESCRIPTION AND PROJECT OBJECTIVES
CHAPTER 3. SITE ANALYSIS
CHAPTER 4. SPACE TABULATION FORM
CHAPTER 5. ROOM REQUIREMENTS
CHAPTER 6. ENGINEERING SYSTEMS REQUIREMENTS

4. PART 4 – PERFORMANCE TECHNICAL SPECIFICATIONS

A10 FOUNDATIONS
B10 SUPERSTRUCTURE
B20 EXTERIOR ENCLOSURE
B30 ROOFING
C10 INTERIOR CONSTRUCTIONS
C30 INTERIOR FINISHES
D10 CONVEYING
D20 PLUMBING
D30 HVAC

D40 FIRE PROTECTION
D50 ELECTRICAL
E20 FURNISHINGS
G10 SITE PREPARATIONS
G20 SITE IMPROVEMENTS
G30 SITE CIVIL/MECHANICAL UTILITIES
G40 SITE ELECTRICAL UTILITIES
Z10 GENERAL PERFORMANCE TECHNICAL SPECIFICATION

5. PART 5 – PRESCRIPTIVE SPECIFICATIONS

-- Not used --

6. PART 6 – ATTACHMENTS

ATTACHMENT A - GEOTECHNICAL ENGINEERING REPORT
ATTACHMENT B – BUILDING INFORMATION MODELING (BIM)
ATTACHMENT C - LEED NC V3 (Project Checklist)
ATTACHMENT D - LIFE SAFETY AND FIRE PROTECTION ANALYSIS
ATTACHMENT E – FLOW TEST REPORT
ATTACHMENT F – EXPLOSIVE SAFETY SUBMISSION (ESS)
ATTACHMENT G - DRAWINGS

PART ONE – PROPOSAL FORMS & DOCUMENTS

(Final RFP Submittal)

Not Used.

PART TWO- GENERAL REQUIREMENTS

(Final RFP Submittal)

Summary of Work **01 11 00.00 00**

Work Restrictions for Design-Build **01 14 00.05 20**

Price and Payment Procedures for Design-Build **01 20 00.05 20**

Administrative Requirements for Design-Build **01 30 00.05 20**

Post Award Meetings **01 31 19.05 20**

Design and Construction Progress Documentation **01 32 16.00 20**

Network Analysis Schedules (NAS) for Design-Build **01 32 17.05 20**

Construction Submittal Procedures **01 33 00.05 20**

Design Submittal Procedures **01 33 10.05 20**

Government Safety Requirements for Design-Build **01 35 26.05 20**

Design and Construction Quality Control **01 45 00.05 20**

Temporary Facilities and Controls for Design-Build **01 50 00.05 20**

Temporary Environmental Controls **01 57 19.00 20**

Construction and Demolition Waste Management for Design-Build **01 74 19.05 20**

Facility Operation and Maintenance Support Information **01 78 24.05 20**

SECTION 01 11 00

SUMMARY OF WORK
07/06

PART 1 GENERAL

1.1 REFERENCES

The publications listed below form a part of this specification to the extent referenced. The publications are referred to within the text by the basic designation only.

ASTM INTERNATIONAL (ASTM)

ASTM E 2114	(2000; R 2005) Standard Terminology for Sustainability Relative to the Performance of Buildings

GREEN BUILDING INITIATIVE (GBI)

Green Globes	(2004) Green Globes(tm) US Green Building Rating System

U.S. ENVIRONMENTAL PROTECTION AGENCY (EPA)

Energy Star	(1992; R 2006) Energy Star Energy Efficiency Labeling System

U.S. GREEN BUILDING COUNCIL (USGBC)

LEED	(2002; R 2005) Leadership in Energy and Environmental Design(tm) Green Building Rating System for New Construction (LEED-NC)

1.2 DEFINITIONS

Definitions pertaining to sustainable development are as defined in ASTM E 2114, Section 01 57 20.00 10 TEMPORARY ENVIRONMENTAL CONTROL, and as specified.

a. "Environmentally preferable products" have a lesser or reduced effect on the environment in comparison to conventional products and services. This comparison may consider raw materials acquisition, production, manufacturing, packaging, distribution, reuse, operation, maintenance, or disposal of the product.

b. "Indoor environmental quality" is the physical characteristics of the building interior that impact occupants, including air quality, illumination, acoustics, occupant control, thermal comfort, daylighting, and views.

c. "Operational performance" is the functional behavior of the building as a whole or of the building components.

d. "Sustainability" is the balance of environmental, economic, and societal considerations.

1.3 SUBMITTALS

Government approval is required for submittals with a "G" designation; submittals not having a "G" designation are for Contractor Quality Control approval. Refer to Section 01 33 00 05 20 CONSTRUCTION SUBMITTAL PROCEDURES, and Section 01 33 10 05 20 DESIGN SUBMITTAL PROCEDURES for the list of submittal documents.

1.4 WORK COVERED BY CONTRACT DOCUMENTS

1.4.1 Project Description

The work includes construction of box-type reinforced concrete shear wall building, with cast-in-place or precast wall panel, cast-in-place concrete reinforced roof metal decking on steel joist and steel girders. It also includes all necessary utilities and other incidental related work as described in Part 3, another part of this RFP.

Proposed Bid items specifically identified are the following:

BASIC BID – Construct REDHORSE Cantonment Operations Facility complete, including including design, construction and conversion of the existing overhead primary electrical distribution system to approximately 2,100 LF of underground primary electrical system including trenching and site restoration around the REDHORSE industrial site. (Overhead electrical to Underground electrical conversion is described in Engineering Systems Requirements, G41, Exterior Electrical Service and Part 6 of the RFP Documents).

Additive Bid Option:

OB1 – Explosives Safety Submission (ESS) Munitions Response Sites Guam Construction Support Implementation – All work to conform to the ESS requirements in Part 6, Attachment F, based on the site-assessed “moderate” or “medium” risk of accidental UXO discovery.

1.4.2 Location

The work shall be located at the PACAF Regional Training Center (PRTC), AAFB, Guam, approximately as indicated. The exact location will be shown by the Contracting Officer.

1.5 PROJECT ENVIRONMENTAL GOALS

Contractor shall distribute copies of the Environmental Goals to each subcontractor and the Contracting Officer. The overall goal for design, construction, and operation is to produce a building that meets the functional program needs and incorporates the principles of sustainability. Specifically:

a. Preserve and restore the site ecosystem and biodiversity; avoid site degradation and erosion. Minimize offsite environmental impact.

b. Use the minimum amount of energy, water, and materials feasible to meet the design intent. Select energy and water efficient equipment and strategies.

c. Use environmentally preferable products and decrease toxicity level of materials used.

d. Use renewable energy and material resources.

e. Optimize operational performance (through commissioning efforts) in order to ensure energy efficient equipment operates as intended. Consider the durability, maintainability, and flexibility of building systems.

f. Manage construction site and storage of materials to ensure no negative impact on the indoor environmental quality of the building.

g. Reduce construction waste through reuse, recycling, and supplier take-back.

1.5.1 Independent Verification

1.5.1.1 US Green Building Council (USGBC) - LEED(tm) Rating System

Provide work consistent with USGBC LEED-NC(tm) v3, level silver requirements. Refer to Para. 2.3.1(*Sustainable Design)*, Part 3 of this RFP *for LEED credits and additional administrative requirements.*

1.5.1.3 EPA Energy Performance Rating

Provide work consistent with drawings in order to meet Energy Star in accordance with design.

1.6 EXISTING WORK

Not Used

1.7 LOCATION OF UNDERGROUND FACILITIES

Obtain digging permits prior to start of excavation by contacting the Contracting Officer 15 calendar days in advance. Verify elevations before installing new work closer than nearest manhole or other structure at which an adjustment in grade can be made.

1.7.1 Notification Prior to Excavation

Notify the Contracting Officer at least 48 hours prior to starting excavation work.

1.8 GOVERNMENT-FURNISHED MATERIAL AND EQUIPMENT

Pursuant to Contract Clause "FAR 52-245-4, Government-Furnished Property (Short Form)", the Government will furnish the materials and equipment for installation by the Contractor.

Contractor shall coordinate with the contracting officer regarding the list of GFCI materials to be furnished by 554 REDHORSE Squadron.

1.8.1 Delivery Schedule

Not Used.

1.8.2 Delivery Location

The materials and equipment will be delivered to the jobsite.

1.9 GOVERNMENT-INSTALLED WORK

Not Used

1.10 NMCI Contractor Access

The NMCI Contractor must be allowed access to the facility towards the end of construction (finishes 90% complete, rough-in 100% complete, Inside Plant (ISP)/Outside Plant (OSP) infrastructure in place) to provide equipment in the telecommunications rooms and make final connections. The construction contractor will be required to coordinate his efforts with the NMCI contractor to facilitate joint use of building spaces during the final phases of construction. After the Contracting Officer has facilitated coordination meetings between the two contractors, the construction contractor must, within one week, incorporate the effort of additional contractor coordination into his construction schedule to demonstrate his plan for maintaining the contract duration.

PART 2 PRODUCTS

Not used.

PART 3 EXECUTION

Not used.

-- End of Section --

SECTION 01 14 00.05 20

WORK RESTRICTIONS FOR DESIGN-BUILD

11/07

PART 1 GENERAL

1.1 DEFINITIONS

1.1.1 State

"State" when used in reference to states of the United States shall also include the Territory of Guam.

1.2 SUBMITTALS

The use of a "G" following a submittal indicates that a Government approval action is required. Submit the following in accordance with Section 01 33 10.05 20 DESIGN SUBMITTAL PROCEDURES and Section 01 33 00.05 20 CONSTRUCTION SUBMITTAL PROCEDURES.

SD-01 Preconstruction Submittals

List of contact personnel; G

Personnel List; G

Vehicle List; G

Statement of Acknowledgement Form SF 1413: G

1.3 SPECIAL SCHEDULING REQUIREMENTS

a. Permission to interrupt any Activity roads, and/or utility service shall be requested in writing a minimum of 15 calendar days prior to the desired date of interruption.

b. NMCI Contractor Access: The NMCI Contractor must be allowed access to the facility towards the end of construction (finishes 90% complete, rough-in 100% complete, Inside Plant (ISP)/Outside Plant (OSP) infrastructure in place) to provide equipment in the telecommunications rooms and make final connections. The Contractor will be required to coordinate their efforts with the NMCI contractor to facilitate joint use of building spaces during the final phases of construction and work the coordination effort into the construction schedule. Requirements for NMCI are specified in Part 4, D50 ELECTRICAL and G40 SITE ELECTRICAL UTILITIES.

1.4 CONTRACTOR ACCESS AND USE OF PREMISES

1.4.1 Activity Regulations

Ensure that Contractor personnel employed on the Activity become familiar with and obey Activity regulations including safety, fire, traffic and security regulations. Keep within the limits of the work and avenues of

ingress and egress. Ingress and egress of Contractor vehicles and personnel at the Activity is limited to the PRTC main gate near Detachment 5 and will be subject to security regulations of the Andersen Air Force Base. To minimize traffic congestion, delivery of materials shall be outside of peak traffic hours (7:00 to 8:00 a.m. and 3:30 to 5:00 p.m.) unless otherwise approved by the Contracting Officer. Wear hard hats in designated areas. Do not enter any restricted areas unless required to do so and until cleared for such entry. The Contractor's equipment shall be conspicuously marked for identification.

a. All personnel must be made aware of the posted base speed limits.

b. Traffic accidents should be reported immediate to the Base Security Police.

c. All personnel entering the installation are subject to random vehicle inspections. The purpose of these inspections is to detect the theft of Government and private property. And to detect contraband or illegal drugs.

d. Required Information on Privately Owned Vehicles – Advise company employees who desire to use their privately owned vehicles to personally bring the vehicle, vehicle registration, copy of vehicle insurance policy, valid state inspection documentation, personnel base pass and driver’s license to the Andersen Air Force Base Visitor’s Center at AAFB Main Gate.

e. Access to Restricted Areas – Base entry passes allow access to designated areas on the installation only. Entry into off limits areas is prohibited unless the contract requires it.

f. Current Information – Contractors will be responsible for keeping the vehicle and employee list current, and for securing and returning identification cards belonging to terminated employees to the AAFB Pass and Identification Office.

1.4.1.1 Subcontractors and Personnel Contacts

Furnish a list of contact personnel of the Contractor and subcontractors including addresses and telephone numbers for use in the event of an emergency. As changes occur and additional information becomes available, correct and change the information contained in previous lists.

1.4.1.2 Identification Badges

Identification badges will be issued to the Contractor and his employees in accordance with the Andersen Air Force Base Security Regulations. A copy of the security regulations may be obtained from the 36th Security Forces Squadron office (36 SFS, AAFB). All badges must be returned or accounted for to the department of Security Squadron Safety's Pass and Identification Office upon expiration of the badge or contract, or termination of the employee.

1.4.1.3 Employee List

The Contractor shall provide to the Contracting officer, in writing, the names of two designated representatives authorized to request personnel and vehicle passes for employees and subcontractor's employees prior to commencement of work under this contract. The Contractor shall adhere to the requirements of "Important Clarifications - Contractors - How to Gain Access," dated 31 October 1995, in obtaining access to the Andersen Air

Force Base, PRTC complex for the life of the contract. A copy of these requirements will be provided at the preconstruction meeting.

1.4.1.4 Personnel Entry Approval

Failure to obtain entry approval will not affect the contract price or time of completion.

1.4.5 Working Hours

Allowed working hours shall consist of an 8 1/2 hour period established by the Contracting Officer, between 7 a.m. and 4:30 p.m. ,Monday through Friday, excluding Government holidays.

1.4.6 Work Outside Regular Hours

Work outside regular working hours is not permitted.

1.4.9 Utility Cutovers and Interruptions

a. Make utility cutovers during normal working hours. Conform to procedures required in the paragraph "Work Outside Regular Hours."

1.4.9.1 Location of Underground Utilities

Obtain digging permits prior to start of excavation by contacting the Contracting Officer 15 calendar days in advance. Scan the construction site with electromagnetic or sonic equipment, and mark the surface of the ground or paved surface where existing underground utilities or utilities encased in pier structures are discovered. Verify the elevations of existing piping, utilities, and any type of underground or encased obstruction not indicated to be specified or removed but indicated or discovered during scanning in locations to be traversed by piping, ducts, and other work to be conducted or installed.

a. Notification Prior to Excavation: Notify the Contracting Officer at least 15 days prior to starting excavation work.

1.5 SECURITY REQUIREMENTS

Contract Clause "FAR 52.204-2, Security Requirements and Alternate II," "FAC 5252.236-9301, Special Working Conditions and Entry to Work Area," and the following apply:

1.5.24 Employment Restrictions for NAVFAC Marianas and Andersen Air Force Base, Guam

There are no employment restrictions for contractor required by this contract, Contractor can employ any person to work in this contract provided they are legally employed and were issued identification badges by Andersen Air Force Base 36th Security Forces Squadron office.

1.5.24.1 Personnel List

Submit for approval, at least 15 days prior to the desired date of entry, an original alphabetical list of personnel who require entry into Government property to perform work on the project. Furnish for each person the completed USAF Contractor/Sub-Contractor Access Affidavit Form

to include the following:

a. Name

b. Date and place of birth

c. Citizenship

d. Home address

e. Social security number

f. Current pass expiration date

g. Naturalization, or Alien Registration number

h. Passport number, place of issue, and expiration date

i. Guam Police clearance report for last six months

The request for personnel passes shall be accompanied with the following certification:

"I hereby certify that all personnel on this list are either born U.S. citizens, naturalized U.S. citizens with the naturalization number shown , or legal aliens with the alien registration number indicated."

Signature/Firm Name

1.5.24.2 Vehicle List

submit an original list of vehicles to be utilized at the work site with the following information for each vehicle:

a. Make

b. Year

c. Model

d. License number

e. Registered owner

1.5.24.3 Passes

Submit request for personnel and vehicle passes at Andersen Air Force Base Visitors Center. Include the Certificate of Insurance for Contractor and Subcontractor(s) and the Statement of Memorandum from 36 Civil Engineering Squadron with the submittal. Passes will normally be issued within 21 days.

-- End of Section --

SECTION 01 20 00.05 20

PRICE AND PAYMENT PROCEDURES FOR DESIGN-BUILD
02/11

PART 1 GENERAL

1.1 REFERENCES

The publications listed below form a part of this specification to the extent referenced. The publications are referred to within the text by the basic designation only.

U.S. ARMY CORPS OF ENGINEERS (USACE)

EP-1110-1-8	(2009) Construction Equipment Ownership and Operating Expense Schedule, Vol 1-12

1.2 SUBMITTALS

Government approval is required for submittals with a "G" designation; submittals not having a "G" designation are for Contractor Quality Control approval. The following shall be submitted in accordance with Section 01 33 10.05 20 *DESIGN SUBMITTAL PROCEDURES*and Section 01 33 00.05 20 *CONSTRUCTION SUBMITTAL PROCEDURES*:

SD-01 Preconstruction Submittals

[Schedule of Prices] [Earned Value Report]; G

1.3 .[SCHEDULE OF PRICES] [EARNED VALUE REPORT]

1.3.1 Data Required

[This contract requires the use of a cost-loaded Network Analysis Schedule (NAS). The information required for the Schedule of Prices will be entered as an integral part of the Network Analysis Schedule.] Within [15] [_____] calendar days of notice of award, prepare and deliver to the Contracting Officer [a Schedule of Prices][an Earned Value Report(construction contract) as directed by the Contracting Officer. Provide a detailed breakdown of the contract price, giving quantities for each of the various kinds of work, unit prices, and extended prices. Costs shall be summarized and totals provided for each construction category.

1.3.2 Schedule Instructions

Payments will not be made until the [Schedule of Prices][Earned Value Report from cost-loaded NAS] has been submitted to and accepted by the Contracting Officer. For design phase progress payment(s), the Schedule of Prices or Earned Value Report from the Cost Loaded CPM shall include detailed design activities and general (summarized) approach for the construction phase(s) of the project. The Schedule of Prices or Earned Value Report shall be fully developed with detailed construction line items as design progresses. The complete design and construction Schedule of Prices or Earned Value Report shall be submitted and accepted prior to starting construction work.

For Fast-Tracked or Critical Path Submittals of construction projects, the [Schedule of Prices] [Earned Value Report] shall include detailed design and

construction line items for each fast-tracked/ critical path phase(s), submitted to and accepted by the Contracting Officer during the Post Award Kickoff Meetings and confirmed prior to starting construction work in that phase. Additionally, the [Schedule of Prices][Earned Value Report] shall be separated as follows:

a. Primary Facility/s Cost Breakdown:

Defined as work on the primary facility/s out to the 1.5 m (5 foot) line. Work out to the 1.5 m (5 foot) line shall include construction encompassed within a theoretical line 1.5 m (5 foot) from the face of exterior walls and shall include attendant construction, such as pad mounted HVAC equipment, that may extend beyond the 1.5 m (5 foot) line.

b. Supporting Facilities Cost Breakdown:

Defined as site work, including incidental work, outside the 1.5 m (5 foot) line.

1.3.3 Real Property Assets

Provide the Draft and Interim DD Form 1354, Transfer and Acceptance of Military Real Property filled in with the appropriate Real Property Unique Identifiers (RPUID) and related construction Category Codes. Provide the Draft DD Form 1354 that uses the appropriate division of the RPUIDs/ Category Codes to represent the designed real property assets that apply to this contract and include all associated cost. The Contractor shall meet with the Contracting Officer and the Real Property Accounting Officer during the Post Award Kickoff Meeting and the Project Closeout Meetings to modify and include any necessary changes to the DD Form 1354. The Contractor shall provide the Interim DD Form 1354 that uses the appropriate division of the RPUIDs/ Category Codes to represent the final constructed facility and include all associated cost. Coordinate the Contractor's Price and Payment structure with the structure of the RPUIDs/ Category Codes.

Divide detailed asset breakdown into the RPUIDs and related construction Category Codes and populate associated costs which represent all aspects of the work. Where assets diverge into multiple RPUID/ Category Codes, divide the asset and provide the proportion of the assets in each RPUID/ Category Code. Assets and related RPUID/ Category Codes may be modified by the Contracting Officer as necessary during the course of the work. Coordinate identification and proportion of these assets with the Government Real Property Accounting Officer.

Cost data accumulated under this section are required in the preparation of DD Form 1354. Coordinate with section 01 33 10.05 20, *Design Submittal Procedures*in paragraph titled "DD Form 1354".

1.3.4 Schedule Requirements for HVAC TAB

The field work Section 23 05 93 *TESTING, ADJUSTING AND BALANCING*shall be broken down in the [Schedule of Prices and in the Construction Progress Documentation][Earned Value Report from the cost-loaded NAS] by separate line items which reflect measurable deliverables. Specific payment percentages for each line item shall be determined on a case by case basis for each contract. The line items shall be as follows:

a. Approval of Design Review Report: The TABS Agency is required to conduct a review of the project plans and specifications to identify any feature, or the lack thereof, that would preclude successful testing and balancing of the project HVAC systems. The resulting findings shall be submitted to the Government to allow correction of the design. The progress payment shall be issued after review and approval of the report.

b. Approval of the pre-field engineering report: The TABS Agency submits a report

which outlines the scope of field work. The report shall contain details of what systems will be tested, procedures to be used, sample report forms for reporting test results and a quality control checklist of work items that must be completed before TABS field work commences.

c. Season I field work: Incremental payments are issued as the TABS field work progresses. The TABS Agency mobilizes to the project site and executes the field work as outlined in the pre-field engineering report. The HVAC water and air systems are balanced and operational data shall be collected for one seasonal condition (either summer or winter depending on project timing).

d. Approval of Season I report: On completion of the Season I field work, the data is compiled into a report and submitted to the Government. The report is reviewed, and approved, after ensuring compliance with the pre-field engineering report scope of work.

e. Completion of Season I field QA check: Contract QC and Government representatives meet the TABS Agency at the jobsite to retest portions of the systems reported in the Season I report. The purpose of these tests are to validate the accuracy and completeness of the previously submitted Season I report.

f. Approval of Season II report: The TABS Agency completes all Season II field work, which is normally comprised mainly of taking heat transfer temperature readings, in the season opposite of that under which Season I performance data was compiled. This data shall be compiled into a report and submitted to the Government. On completion of submittal review to ensure compliance with the pre-field engineering report scope, progress payment is issued. Progress payment is less than that issued for the Season I report since most of the water and air balancing work effort is completed under Season I.

1.3.5 Schedule Requirements for LEED Certification

Submittals to the U.S. Department of Energy's Federal Energy Management Program, *High Performance Federal Buildings Database*and to USGBC for LEED certification as required in UFGS 01 33 10.05 20, *Design Submittal Procedures*shall be included as activities in the NAS. A separate line item equal to 0.5% of the contract/task order value and identified as - LEED Certification, shall be included in the contractor's [Schedule of Prices] [Earned Value Report from the cost-loaded NAS]. The unit of measure for this line item shall be lump sum without any payment made until the specified level of LEED certification is obtained from USGBC and the Certification documentation is provided to the Contracting Officer in accordance with the UFGS 01 33 10.05 20.

1.4 CONTRACT MODIFICATIONS

In conjunction with the Contract Clause "DFARS 252.236-7000, Modification Proposals-Price Breakdown," and where actual ownership and operating costs of construction equipment cannot be determined from Contractor accounting records, equipment use rates shall be based upon the applicable provisions of the EP-1110-1-8.

1.5 CONTRACTOR'S INVOICE AND CONTRACT PERFORMANCE STATEMENT

1.5.1 Content of Invoice

Requests for payment will be processed in accordance with the Contract. Clause FAR 52.232-27, Prompt Payment Construction Contracts and FAR 52.232-5, Payments Under Fixed-Price Construction Contracts. The Requests for payment shall include the documents listed below:

- The Contractor's invoice, on NAVFAC Form 7300/30 furnished by the Government, showing in summary form, the basis for arriving at the amount of the invoice. Form 7300/30 shall include certification by Quality Control (QC) Manager as required by the contract.

- The [Estimate for Voucher/ Contract Performance Statement on NAVFAC Form 7300/31 furnished by the Government][Earned Value Report from the cost-loaded NAS], showing in detail: the estimated cost, percentage of completion, and value of completed performance [for each of the construction categories stated in this contract]. Use LANTNAVFACENGCOM Form 4-330/110 (New 7/84) on NAVFAC Atlantic contracts when a Monthly Estimate for Voucher is required.

- Updated Project Schedule and reports required by the contract

- Contractor Safety Self Evaluation Checklist

- Other supporting documents as requested

- Updated copy of submittal register.

- Invoices not completed in accordance with contract requirements will be returned to the Contractor for correction of the deficiencies.

[h. Subcontractor and supplier payment certification.

i. Materials on Site.

[j. Affidavit to accompany invoice (LANTDIV NORVA Form 4-4235/4 (Rev.5/81)).]]

[h. Monthly Work-hour report

i. Solid Waste Disposal Report

1.5.2 Submission of Invoices

If NFAS Clause 5252.232-9301 is included in the contract, the listed documents shall be provided as attachments in Wide Area Work Flow (WAWF). The maximum size of each WAWF attachment is two megabytes, but there are no limits on the number of attachments. If a document cannot be attached in WAWF due to system or size restriction it shall be provided as instructed by the Contracting Officer. All other paper invoices shall be forwarded with specific marking on the envelope. This marking shall be in the front lower left hand corner, in large letters, "INVOICES - ENCLOSED."

[Monthly invoices and supporting forms for work performed through the anniversary award date of the contract shall be submitted to the Contracting Officer within 5 calendar days of the date of invoice For example, contract award date is the 7th of the month, the date of each monthly invoice shall be the 7th and the invoice shall be submitted by the 12th of the month.

1.5.3 Final Invoice

a. A final invoice shall be accompanied by the certification required by DFARS 252.247.7023 TRANSPORTATION OF SUPPLIES BY SEA, and the Contractor's Final Release. If the Contractor is incorporated, the Final Release shall contain the corporate seal. An officer of the corporation shall sign and the corporate secretary shall certify the Final Release.

b. For final invoices being submitted via WAWF, the original Contractor's Final Release Form and required certification of Transportation of Supplies by Sea must be provided directly to the respective Contracting Officer prior to submission of the final invoice. Once receipt of the original Final Release Form and required certification of Transportation of Supplies by Sea has been confirmed by the Contracting Officer, the Contractor shall then submit final invoice and attach a copy of the Final Release Form and required certification of Transportation of Supplies by Sea in WAWF.

c. Final invoices not accompanied by the Contractor's Final Release and required certification of Transportation of Supplies by Sea will be considered incomplete and will be returned to the Contractor.

1.6 PAYMENTS TO THE CONTRACTOR

Payments will be made on submission of itemized requests by the Contractor which comply with the requirements of this section, and will be subject to reduction for overpayments or increase for underpayments made on previous payments to the Contractor.

1.6.1 Obligation of Government Payments

The obligation of the Government to make payments required under the provisions of this contract will, at the discretion of the Contracting Officer, be subject to reductions and/or suspensions permitted under the FAR and agency regulations including the following in accordance with "FAR 32.503-6:

a. Reasonable deductions due to defects in material or workmanship;

b. Claims which the Government may have against the Contractor under or in connection with this contract;

c. Unless otherwise adjusted, repayment to the Government upon demand for overpayments made to the Contractor; and

d. Failure to provide up to date record drawings not current as stated in Contract Clause "FAC 5252.236-9310, Record Drawings."

1.6.2 Payment for Onsite and Offsite Materials

Progress payments may be made to the contractor for materials delivered on the site, for materials stored off construction sites, or materials that are in transit to the construction sites under the following conditions:

a. FAR 52.232-5(b) Payments Under Fixed Price Construction Contracts.

b. Materials delivered on the site but not installed, including completed preparatory work, and off-site materials to be considered for progress payment shall be major high cost, long lead, special order, or specialty items, not susceptible to deterioration or physical damage in storage or in transit to the construction site. Examples of materials acceptable for payment consideration include, but are not limited to, structural steel, non-magnetic steel, non-magnetic aggregate, equipment, machinery, large pipe and fittings, precast/prestressed concrete products, plastic lumber (e.g., fender piles/curbs) and high-voltage electrical cable. Materials not acceptable for payment include consumable materials such as nails, fasteners, conduits, gypsum board, glass, insulation, and wall coverings.

c. Materials to be considered for progress payment prior to installation shall be specifically and separately identified in the Contractor's estimates of work submitted for the Contracting Officer's approval in accordance with [Schedule of Prices][Earned Value Report] requirement of this contract. Requests for

progress payment consideration for such items shall be supported by documents establishing their value and that the title requirements of the clause at FAR 52.232-5 have been met.

d. Materials are adequately insured and protected from theft and exposure.

e. Provide a written consent from the surety company with each payment request for offsite materials.

f. Materials to be considered for progress payments prior to installation shall be stored either in Hawaii, Guam, Puerto Rico, or the Continental United States. Other locations are subject to written approval of the Contracting Officer.

PART 2 PRODUCTS

Not used.

PART 3 EXECUTION

Not used.

-- End of Section --

SECTION 01 30 00.05 20

ADMINISTRATIVE REQUIREMENTS FOR DESIGN-BUILD

11/07

PART 1 GENERAL

1.1 REFERENCES

The publications listed below form a part of this specification to the extent referenced. The publications are referred to within the text by the basic designation only.

U.S. NATIONAL ARCHIVES AND RECORDS ADMINISTRATION (NARA)

15 CFR 772	Definition of Terms
15 CFR 773	Special Licensing Procedures

1.2 SUBMITTALS

The use of a "G" following a submittal indicates that a Government approval action is required. Submit the following in accordance with Section 01 33 10.05 20 DESIGN SUBMITTAL PROCEDURES and Section 01 33 00.05 20 CONSTRUCTION SUBMITTAL PROCEDURES.

SD-01 Preconstruction Submittals

Insurance; G

1.3 MINIMUM INSURANCE REQUIREMENTS

Procure and maintain during the entire period of performance under this contract the following minimum insurance coverage:

a. Comprehensive general liability: $500,000 per occurrence

b. Automobile liability: $200,000 per person, $500,000 per occurrence for bodily injury, $20,000 per occurrence for property damage

c. Workmen's compensation as required by Federal and State workers' compensation and occupational disease laws.

d. Employer's liability coverage of $100,000, except in States where workers compensation may not be written by private carriers,

e. Others as required by the State.

1.4 CONTRACTOR PERSONNEL REQUIREMENTS

1.4.1 Subcontractor Special Requirements

1.4.1.1 Asbestos Containing Material

All contract requirements of PART 4, F20 SELECTIVE BUILDING DEMOLITION, assigned to the Private Qualified Person (PQP) shall be accomplished directly by a first tier subcontractor.

1.4.1.2 HVAC TAB

All contract requirements of TAB work required by PART 4 D30, HVAC, shall be accomplished directly by a first tier subcontractor. No TAB work required by PART 4, D30, HVAC, shall be accomplished by a second tier subcontractor.

1.4.1.3 Qualified Testing Organization

All contract requirements of work required to be performed by a Qualified Testing Organization in PART 4, D50 ELECTRICAL and G40 SITE ELECTRICAL UTILITIES, shall be accomplished directly by a first tier subcontractor. No work to be performed by a Qualified Testing Organization, required by PART 4, D50 and G40 shall be accomplished by a second tier subcontractor.

1.5 SUPERVISION

Have at least one qualified supervisor capable of reading, writing, and conversing fluently in the English language on the job site during working hours. In addition, the Quality Control (QC) representative shall also have fluent English communication skills.

1.6 SUPERVISION

Provide at least one (1) qualified Project Manager and one (1) on-site Project Superintendent per project capable of reading, writing, and conversing fluently in both English languages. The Project Manager must have a minimum 10 years experience as a Project Manager or Superintendent on projects like this contract or similar in size and complexity. The Project Superintendent must have a minimum of 10 years experience as a Superintendent on projects similar in size and complexity.
In addition to the above experience requirements, the Project Manager and on-site Project Superintendent shall complete the course entitled "Construction Quality Management for Contractors" prior to the start of construction. This course is periodically offered at ROICC offices in Italy. Contact the Contracting Officer to schedule attendance in the course.

The Project Manager in this context shall mean the individual with the responsibility for the overall management of the project and the Project Superintendent shall mean the individual with the responsibility for quality and production. Both the Project Manager and Project Superintendent are subject to removal by the Contracting Officer for non-compliance with requirements specified in the contract and for failure to manage the project to insure timely completion. Furthermore, the Contracting Officer may issue an order stopping all or part of the work until satisfactory corrective action has been taken. No part of the time lost due to such stop orders shall be made the subject of claim for extension of time for excess costs or damages by the Contractor.

Approval of Project Manager and on-site Project Superintendent is required prior to start of construction. Provide resumes for the proposed Project Manager and on-site Project Superintendent describing their experience with references and qualifications to the Contracting Officer for approval. The Contracting Officer reserves the right to interview the proposed Project Manager and on-site Project Superintendent at any time in order to verify the submitted qualifications.

1.8 EXPORT LICENSES FOR OVERSEAS PROJECTS

Obtain individual export licenses and project export licenses required by the Department of Commerce regulations (15 CFR 772 and 15 CFR 773) so that no delays are experienced in shipping from the United States of America to a foreign country. For additional information, the Contractor may contact one of the U.S. and Foreign Commercial Service District Offices of the Department of Commerce which are located in almost every State.

1.9 WAIVER FOR WORKER'S COMPENSATION

In addition to "FAR 52.228-4, Workers' Compensation and War Hazard Insurance Overseas," the Secretary of Labor has granted a waiver. The waiver does not apply to employees who are hired in the United States, or who are residents, or citizens of the United States.

1.10 AMERICAN PREFERENCE POLICY

This project is funded under the 1987 Defense Appropriation Act and is estimated to be over $1,000,000. The American Preference policy applies as follows:

> This policy precludes the award of construction contract estimated by the Government to exceed $1,000,000 to a foreign contractor; unless the lowest responsive bid of a U.S. contractor exceeds the lowest responsible and responsive bid of a foreign contractor by greater than 20 percent. To qualify as a U.S. contractor, the firm (or if a joint venture, all members of he joint venture) must be incorporated in the U.S. and comply with the following: (a) the corporate headquarters shall be in the U.S,; (b) the firm shall have filed corporate franchise and employment tax returns (if required) in the U.S. for a minimum of 2 years, shall have filed state and federal income tax returns (if required) for a minimum of 2 corporate years, and paid any taxes determined to be due as a result of such filings; and (c) the firm shall employ U.S. citizens in key management positions.

1.11 AVAILABILITY OF CADD DRAWING FILES

After award and upon request, the electronic "Computer-Aided Drafting and Design (CADD)" drawing files will be made available to the Contractor for use in preparation of construction drawings and data related to the referenced contract subject to the following terms and conditions.

Data contained on these electronic files shall not be used for any purpose other than as a convenience in the preparation of construction drawings and data for the referenced project. Any other use or reuse shall be at the sole risk of the Contractor and without liability or legal exposure to the Government. The Contractor shall make no claim and waives to the fullest extent permitted by law, any claim or cause of action of any nature against the Government, its agents or sub consultants that may arise out of or in connection with the use of these electronic files. The Contractor shall, to the fullest extent permitted by law, indemnify and hold the Government harmless against all damages, liabilities or costs, including reasonable attorney's fees and defense costs, arising out of or resulting from the use of these electronic files.

These electronic CADD drawing files are not construction documents. Differences may exist between the CADD files and the corresponding construction documents. The Government makes no representation regarding the accuracy or completeness of the electronic CADD files, nor does it make representation to the compatibility of these files with the Contractors

hardware or software. In the event that a conflict arises between the signed and sealed construction documents prepared by the Government and the furnished CADD files, the signed and sealed construction documents shall govern. The Contractor is responsible for determining if any conflict exists. Use of these CADD files does not relieve the Contractor of duty to fully comply with the contract documents, including and without limitation, the need to check, confirm and coordinate the work of all contractors for the project.

If the Contractor uses, duplicates and/or modifies these electronic CADD files for use in producing construction drawings and data related to this contract, all previous indicia of ownership (seals, logos, signatures, initials and dates) shall be removed.

1.12 CLEANUP

Leave premises "broom clean." Clean interior and exterior glass surfaces exposed to view; remove temporary labels, stains and foreign substances; polish transparent and glossy surfaces; vacuum carpeted and soft surfaces. Clean equipment and fixtures to a sanitary condition. [Clean] [Replace] filters of operating equipment. Clean debris from roofs, gutters, downspouts and drainage systems. Sweep paved areas and rake clean landscaped areas. Remove waste and surplus materials, rubbish and construction facilities from the site.

PART 2 PRODUCTS

Not used.

PART 3 EXECUTION

Not used.

-- End of Section --

SECTION 01 31 19.05 20

POST AWARD MEETINGS
03/10

PART 1 GENERAL

1.1 SUMMARY

This document includes post-award requirements for project kickoff and subsequent design and preconstruction meetings.

1.2 SUBMITTALS

The use of a "G" following a submittal indicates that a Government approval action is required. Submit the following in accordance with Section 01 33 10.05 20 DESIGN SUBMITTAL PROCEDURES.

SD-01 Preconstruction Submittals

Design Submittal Packaging Proposal: G

Project Schedule: G

Performance Assessment Plan (PAP); G

Design Presentation Concept Site and Floor Plans; G

CDW Facilitator Experience Resume; G

CDW Preliminary Concept Design; G

CDW Basis of Design with Cost Estimate; G

CDW Concept Design Report; G

1.3 POST AWARD KICKOFF MEETING

The Post Award Kickoff (PAK) meeting is made up of Contract Administration, Concept Design Presentation/Design Development or Concept Design Workshop (CDW), Partnering, and Scheduling. If mutually beneficial to the Contractor and the Government, these four elements may be addressed in a single meeting or multiple meetings.

1.3.1 PAK Meeting Schedule and Location

Within 21 calendar days after contract award, and prior to commencing work, meet with the Contracting Officer for the PAK meeting(s). The meeting shall be located at a specific time and place to be determined by the Contracting Officer.

1.3.2 PAK Meeting Outcomes

The meeting(s) outcomes are:

- Integrate the Contractor and all client representatives into the project team.

- Achieve consensus from the project team on any issues and concerns with the Contractor's technical proposal and the User's functional requirements. Confirm the design is within the project budget.

- Establish and explain policies and procedures for completion of a successful project.

- Establish clear lines of communication and points of contact for Government and Contractor team members.

- Obtain an acceptable conceptual design including floor and site plans, signed by the client, Contractor and other key team members.

- Establish project design schedule, design submittal packaging, and preliminary construction schedule in accordance with UFGS Section 01 32 17.05 20, Network Analysis Schedule (NAS) for Design-Build. Discuss design milestones and events that will should be included in the Quality Control Communication Plan.

- Establish clear expectations for facility turnover and providing DD Form 1354 asset management records to the Government.

- Establish procedure for design packages reviews, Contractor’s resolution to comments, and Government's role in review of packages.

1.3.3 PAK Meeting Contractor Attendees

The following Contractor key personnel shall attend the PAK: Project Manager, Project Scheduler, Lead Designer-of-Record (DOR), Design Staff responsible for each architectural/engineering discipline when facility design is discussed, Superintendent, QC Manager, and the DQC Manager and the Commissioning Authority (CA). Optional attendees include: Principal, Assistant Project Manager, major subcontractors and specialized supplemental QC personnel.

1.3.4 Contract Administration

Contract administration roles and responsibilities will be addressed.

1.3.5 Design Presentation/Development

The Contractor shall lead discussions to develop an understanding of the accepted technical proposal and conduct working sessions to further develop the approved conceptual site, floor plans, and building elevation. The Contractor shall anticipate that Users represented at the Design Presentation will provide additional functional information. At the end of the Design Presentation the Contractor shall provide either assurance that the updated design can be built with-in the budget or identify potential cost modification items and establish a follow-on Design Presentation Meeting to finalize a design that will include trade-offs to bring the project within the budget.

1.3.5.1 Design Presentation/Development Contractor Meetings Attendees

The following Contractor key personnel shall attend the Design Presentation: Project Manager, Project Scheduler, Cost Estimator, Lead Designer of Record, Design Staff responsible for each architectural/engineering discipline when facility design is discussed,

Major Subcontractors, and DQC.

1.3.6 Concept Design Workshop (CDW)

Provide as specified in Appendix 01 31 19.05 20-1, CONCEPT DESIGN WORKSHOP.

1.3.6.1 CDW Meeting Attendees

The following Contractor key personnel shall attend the CDW: Project Manager, Project Scheduler, Cost Estimator, Lead Designer of Record, Design Staff representing each architectural/engineering discipline and Major Subcontractors when facility design is discussed, Superintendent, QC Manager, and DQC.

1.3.7 Partnering

LEVEL B PARTNERING: The Contractor shall conduct partnering sessions with key personnel of the project team, including Contractor's personnel and government personnel. The partnership will draw on the strength of each organization in an effort to achieve a quality project done right the first time, within budget, on schedule, and without any safety mishaps.

To most effectively accomplish this contract, the Government requires the formation of a cohesive partnership with the Contractor and its subcontractors. Key personnel, including the client who will occupy the facility, principal individuals from NAVFAC (Echelon III and/or IV), PWD FEAD, PM&E Branch, Construction Manager (CM)/ Resident Officer in Charge of Construction (ROICC), the project sponsor, and representative(s) of the facility owner will be invited to participate in the partnering process. Key members of the prime and subcontractors teams, including senior management, must participate.

The Contractor shall pay all costs associated with the partnering effort including facilitator, meeting room and other incidental items. Before the partnering session, the contractor shall coordinate with the facilitator requirements for incidental items (audio-visual equipment, two easels, flipchart paper, colored markers, note paper, pens/pencils, colored flash cards, etc.) and have these items available at the partnering session. The contractor will copy documents for distribution to all attendees. The participants shall bear their own costs for meals, lodging and transportation associated with partnering.

a. The Initial Partnering Session shall be a duration of one day minimum Located at a place off base as agreed to by the partners. May take place concurrently with the PAK Meeting and must include Contractor's Participants listed in paragraph "PAK Meeting Attendees". A Government In-house facilitator (a trained facilitator from NAVFAC Atlantic, NAVFAC Pacific, a Facilities Engineering Command (FEC), another ROICC office or another Government agency) will facilitate the partnering sessions. The Contractor is the lead for resolving issues that cannot be finalized during the meeting.

b. The Follow on Partnering Session(s) generally lasts a half day or less and is encouraged to utilize electronic means to expedite meetings. Meetings may be held at a location off Base, at the project site, or in a Government Facility on Base. Schedule quarterly meetings and may be held concurrently with other scheduled meetings, such as QC meetings. Participants may be only those required to resolve current issues. No facilitator required unless desired by the partners.

1.3.8 Performance Assessment Plan (PAP)

The Performance Assessment Plan (PAP) shall be used to document design innovation and budget management, provide performance feedback to the Contractor, and as a basis for interim and final evaluations in the Construction Contractor Appraisal System (CCASS) on-line database.

It is the intent of the Government to establish the PAP based on tangible, measurable indicators of outstanding contractor performance, and on commitments made in the Contractor's proposal. The initial PAP may be found on the NAVFAC Design-Build Request for Proposal Website in RFP PART 6 Attachments. Review and finalized the initial PAP during the Partnering Session. During the initial Partnering Session, the Government, the Contractor, the Designer-of-Record, and the Client will establish the PAP. Following the establishment of the PAP, the Contractor will present it, with his input, for update and discussion at projects meetings which discuss project performance. Submit an updated PAP on a monthly basis with the invoice for that period as a minimum.

1.3.9 Project Schedule

Provide in accordance with Section 01 32 17.05 20 NETWORK ANALYSIS SCHEDULES (NAS) FOR DESIGN-BUILD.

1.4 DESIGN QUALITY ASSURANCE MEETINGS

After Government Quality Assurance (QA) of each Design Submittal has been completed, meet with the Government for a one-day conference to discuss review comments for the specific design submittal.

Provide consolidated copies of all Government comments with annotations of Contractor's action beside them. Notify the Contracting Officer in writing within five (5) days after receipt of Government's comments if the Contractor disagrees with comments technically or interprets comments to exceed the requirements of the contract.

1.4.1 Design QA Meeting Attendees

The following Contractor key personnel shall attend the design QA meetings: Project Manager, QC Manager, Commissioning Authority, and Contractor's Design Staff (architect and engineering disciplines related to topics to be discussed).

1.4.2 Design QA Meeting Location

Meetings shall be located at the office of the Contracting Officer's QA Team or may be conducted at other locations or by other electronic means if mutually acceptable to all parties.

1.4.3 Minimum Design QA Meeting Agenda

Address all Government comments that are unresolved and present clarification or supporting information requested by the Contracting Officer's QA team during the previous meeting.

1.5 PRECONSTRUCTION MEETING

Meet with the Contracting Officer to discuss construction items of concern to the Government and the Contractor such as outages, storage, trailer

location, disposal of construction debris, and safety, at a location to be determined by the Contracting Officer. The Preconstruction meeting may take place with the PAK meeting or at any time prior to mobilization and before any construction work begins.

1.6 RECURRING MEETINGS

1.6.1 Quality Control and Production Meetings

Quality Control and Production Meetings in accordance with UFGS Section 01 45 00.05 20, Design and Construction Quality Control.

1.6.2 Safety Meetings

Safety Meetings in accordance with UFGS Section 01 35 26.05 20, Governmnet Safety Requirements for Design-Build.

1.7 FACILITY TURNOVER PLANNING MEETINGS

Key personnel will meet to identify strategies to ensure the project is carried to expeditious closure and turnover to the Client. Start the turnover process at the PAK Meeting and convene the Facility Turnover Meetings once the project has reached approximately 75% completion or three to six months prior to Beneficial Occupancy Date (BOD), whichever comes first. The Contracting Officer's Representative will lead the meetings and guide the discussions based on an agenda provided by the Government. The Facility Turnover effort shall include the following:

a. PAK Meeting -

1. Contracting Officer's Technical Representative (COTR) will provide the NRZ Checklist and the Contractor, Client, and NAVFAC Representatives will compare Contractor's schedule to NRZ Checklist to ensure all Contractor Checklist Items are included in the schedule and to discuss the scheduling impact of Client and NAVFAC Checklist Items.

2. Discuss the requirements of creating the Draft and finalizing the Interim DD Form 1354 to provide asset management records to the Government. Refer to UFGS Section 01 33 10.05 20, *Design Submittal Procedures* for requirements.

b. Facility Turnover Meetings -

1. Fill in the NRZ Checklist including Contractor, Client,and NAVFAC Checklist Items and assigned a person responsible for each item and a due date. The Contracting Officer's Representative will facilitate the assignment of responsibilities and fill out the NRZ Checklist.

2. Review the Contractor's updated schedule. The Contractor shall develop a POAM for the completion of all Contractor, Client, and NAVFAC Checklist items.

3. Confirm that all NRZ Checklist items will be completed on time for the scheduled Facility Turnover.

1.7.1 Facility Turnover Meeting Attendees

The following key personnel shall attend the Facility Turnover Meetings: Contractor QC Manager, Design Quality Control Manager, Superintendent,

Major Subcontractors, Designer-of-Record, Contracting Officer's Representative, Project Sponsor, Representative(s) of NAVFAC, the Facility Owner/ Real Property Accounting Officer, and the Client.

PART 2 PRODUCTS

Not Used.

PART 3 EXECUTION

Not Used.

Appendix 01 31 19.05 20-1 CONCEPT DESIGN WORKSHOP(CDW)

Provide the following information:

a. CDW Facilitator Experience Resume

b. CDW Preliminary Concept Design

c. CDW Basis of Design with Cost Estimate

d. CDW Concept Design Report

1. General

1.1 Methodology. A Concept Design Workshop will be conducted for this project. This effort will examine project functions and requirements, quality and life safety costs, analyze alternate design concepts, expose and resolve project issues, and develop the final conceptual design.

1.2 Facilitator. The Contractor will provide a Facilitator who is experienced in conducting Concept Design Workshops. He or she will be responsible for leading the team in a timely manner, making sure that issues are pursued and resolved to the maximum extent possible, documenting meetings, organizing the design concept documents for on-site approval, and providing the Concept Design Workshop Report.

1.3 Contractor's Design Team. The primary functions of the Design Team will be to investigate, develop and present alternate design solutions. The entire Design Team will participate in all phases of the Concept Design Workshop effort and provide assistance to the Facilitator in development of the Concept Design Workshop Report, including most of the required documentation.

1.4 Concept Design Workshop Report. Produced almost entirely on-site, the Concept Design Workshop Report will summarize the final conceptual design.

1.5 Award Amount. At each contract stage, the Contractor shall verify that the concept is within the contract award amount.

2. Procedure

2.1 Preliminary Work. The Contractor's Design Team shall complete the following prior to the on-site workshop:

a. Review the contract documents and references explaining the project scope and history.

b. At the Post Award Kickoff meeting, the User(s) makes a

presentation of their functional requirements.

c. Prepare and submit, at least 14 days in advance of the Concept Design Workshop, 15 copies of a preliminary concept design (Concept #1), a Basis of Design, and a statement that the concept provided is within the award amount.

d. Make arrangements for and provide an appropriate conference room convenient to the project site and/or Users for use by the Design Team and government participants during the workshop.

e. Incorporate government comments in a revised Concept #1 and produce at least 20 copies of the revised Concept #1 documents for distribution at the workshop.

f. Facilitator conducts meeting with NAVFAC representatives before the Concept Design Workshop to review preparations, relationships, and the status of work to be accomplished.

2.2 On-Site Workshop. The Design Team shall accomplish the following items during the on-site phase of the Concept Design Workshop. (Typically conducted in four to six working days, minimizing breaks so as to maintain momentum. The Design Team should expect longer than normal workdays.)

a. On the first day of the workshop, meet with the using activity, Station and other Government representatives. The Facilitator will describe the Concept Design Workshop process and review the workshop agenda. The user(s) will provide a functional presentation. This is to reiterate to all participants the User(s) needs and desires. The intent is to make the design solution and issue resolution function-oriented.

b. Present the revised Concept #1 and respond to questions.

c. Participate in a comment/creative session to generate ideas to improve this project in the areas of function, quality and total life cycle cost, issue resolution and sustainable design within the award amount. It is often helpful to request User comments in writing so they may be considered, responded to, and presented at subsequent presentations.

d. Create a new concept design. Design concepts shall include drawings, sketches, and other graphics as necessary to fully describe the concept. Prepare at least 20 copies for distribution at all presentations.

e. Repeat applicable steps as necessary. Usually, three concepts are required. The final concept must be within the contract award amount.

f. The final concept shall include the following:

(1) Site Plan: Show the layout of the proposed facility in relation to major landmarks. Show all buildings, access roads, parking, pedestrian walkways, roads, sidewalks, landscaping, and major utilities. Indicate major dimensions and orientation. Provide a building code analysis, relating the proposed building site, size, and construction type to maximum allowable limits of the International Building Code.

(2) Building Floor Plans: Provide floor plans depicting

functional utilization of spaces and furniture and equipment layout. Show room sizes or dimensions. Provide a Life Safety CodeÂ® analysis with the floor plan to identify required life safety and egress features.

(3) Perspective Sketches: Provide at least one sketch to show a perspective of major buildings. The sketch should not be elaborate but must show the proposed form and massing, colors to be used, and an indication of materials used.

(4) Mechanical Plans: Provide plans as necessary to show the essential work and intent of the design. Suggestions include equipment layouts, zones, etc.

(5) Electrical Plans: Provide plans as necessary to show the essential work and intent of the design. Suggestions include special light fixture types, locations, switching, power outlets and panelboard location. Provide electrical distribution single line diagram.

(6) Cost Estimate: Provide a statement that the concept presented can be constructed within the award amount.

(7) Basis of Design: Describe, in layman's terms, the intent of the design by discipline. Address material quality, energy efficiency and life cycle costs.

(8) Sustainable Design: Demonstrate ability to achieve LEED self-certification.

(9) System Safety Engineering

g. Prepare 20 copies of the final concept (drawings, basis of design and statement that the concept is within the award amount) for distribution at the final presentation.

h. Dependent upon the project, the Concept Design Workshop Report is provided by the Facilitator, includes all items included in the final concept design and the following:

(1) Endorsements: Include a copy of the signature/endorsement sheet.

(2) Comments: Include comments and resolutions concerning the final concept design.

(3) Executive Summary: Summarize the workshop, including how the various concepts differed and were improved during the workshop.

(4) Special Design Features: Identify and describe unique project needs and features, e.g., pile foundations, physical security, intrusion detection systems, access control, construction in humid climates, pollution abatement, tempest, HEMP, etc.

(5) Architectural Compatibility Statement: Identify architectural style, materials, and color scheme; and indicate their compatibility with installation planning and design concepts established in the Base Exterior Architectural Plan.

(6) Environmental Summary: Provide a summary of environmental issues, listing completed actions and items requiring further coordination, waivers or permits.

(7) Supporting Project Documentation: Include data to support

the development of the concept design, layout, and special features. Items should include: project scope discussion, minutes of meetings, function analysis work sheets, and economic and technical analyses if alternatives evaluated.

i. Except for final comments, responses and endorsements, the final report should be completed (electronically) on site, before the final presentation. If requested by the NAVFAC Project Manager, be prepared to present up to 10 hard copies of the report at the conclusion of the workshop.

j. Conduct a "front-to-back" comprehensive presentation of the final concept. Obtain user signatures on a conceptual design endorsement sheet, signifying approval of the concept design, subject to the final comments and their resolutions agreed to at the final presentation meeting.

2.3 Concept Design Workshop Report

Within 14 calendar days of completion of the on-site Concept Design Workshop, the Design Team shall submit to the NAVFAC Project Manager an electronic copy of the Concept Design Workshop Report as one file in *.PDF format.

-- End of Section --

SECTION 01 32 16.05 20

DESIGN AND CONSTRUCTION PROGRESS DOCUMENTATION
7/09

PART 1 GENERAL

1.1 SUBMITTALS

Government approval is required for submittals with a "G" designation; submittals not having a "G" designation are for Contractor Quality Control approval. The following shall be submitted in accordance with Section 01 33 00.05 20 CONSTRUCTION SUBMITTAL PROCEDURES and Section 01 33 10.05 20 DESIGN SUBMITTAL PROCEDURES, except as modified in this contract.

SD-01 Preconstruction Submittals

Design and Construction Schedule; G

1.2 ACCEPTANCE

Prior to the start of work, prepare and submit to the Contracting Officer for acceptance a design and construction schedule in the form of a [Bar Chart][Network Analysis Schedule (NAS)] in accordance with the terms in Contract Clause "FAR 52.236-15, Schedules for Construction Contracts," except as modified in this contract. Acceptance of an error free Baseline Schedule and updates is a condition precedent to processing the Contractor's pay request.

1.3 SCHEDULE FORMAT

1.3.1 Bar Chart Schedule

The Bar Chart shall show submittals, government review periods, material / equipment delivery, utility outages, on-site construction, inspection, testing, and closeout activities. The Bar Chart shall be time scaled and generated using an electronic spreadsheet program.

1.3.1 Network Analysis Schedule (NAS)

The Contractor shall use the critical path method (CPM) to schedule and control project activities. Project schedules shall be prepared and maintained using Primavera P3, Primavera SureTrak or current mandated scheduling program. Save files in Concentric P3 or current mandated scheduling program file format, compatible with the Governments version of the scheduling program. Importing data into P3/SureTrak/current mandated scheduling program using data conversion techniques or third party software will be cause for rejection of the submitted schedule. The schedule shall be built as follows:

The Project Schedule shall show design periods, submittals, government review periods, material/equipment delivery, utility outages, all on-site construction, inspection, testing, and closeout activities. Government and Contractor on-site work activities shall be driven by calendars that reflect Saturdays, Sundays and all Federal Holidays as non-work days.

With the exception of the Contract Award, Start Contract and End Contract

milestone activities, no activities shall be open-ended; each activity shall have predecessor and successor ties.

Date/time constraint(s) and/or lags, other than those required by the contract, shall not be allowed unless accepted by the Contracting Officer. The Contractor shall include as the last activity in the contract schedule, a milestone activity named "Contract Completion Date". The "Contract Completion Date" milestone shall have a "Mandatory Finish" constraint equal to the contract completion date.

Each activity shall be assigned its appropriate Responsibility Code indicating responsibility to accomplish the work indicated by the activity, Phase Code and Work Location Code.

1.3.1.1 NAS Submittals and Procedures

Submit all network analysis and updates in hard copy and on electronic media that is acceptable to the Contracting Officer. Submit an electronic back-up of the project schedule in an import format compatible with the governments scheduling program.

1.4 UPDATED SCHEDULES

Update the Design and Construction schedule at monthly intervals or when the schedule has been revised. The updated schedule shall be kept current, reflecting actual activity progress and plan for completing the remaining work. Submit copies of purchase orders and confirmation of delivery dates as directed.

1.5 THREE-WEEK LOOK AHEAD SCHEDULE

The Contractor shall prepare and issue a 3-Week Look Ahead schedule to provide a more detailed day-to-day plan of upcoming work identified on the Design and Construction Schedule. The work plans shall be keyed to activity numbers when a NAS is required and updated each week to show the planned work for the current and following two-week period. Additionally, include upcoming outages, closures, preparatory meetings, and initial meetings. Identify critical path activities on the Three-Week Look Ahead Schedule. The detail work plans are to be bar chart type schedules, maintained separately from the Design and Construction Schedule on an electronic spreadsheet program and printed on 8-Â½ by 11 sheets as directed by the Contracting Officer. Activities shall not exceed 5 working days in duration and have sufficient level of detail to assign crews, tools and equipment required to complete the work. Three hard copies and one electronic file of the 3-Week Look Ahead Schedule shall be delivered to the Contracting Officer no later than 8 a.m. each Monday and reviewed during the weekly CQC Coordination Meeting.

1.6 CORRESPONDENCE AND TEST REPORTS

All correspondence (e.g., letters, Requests for Information (RFIs), e-mails, meeting minute items, Production and QC Daily Reports, material delivery tickets, photographs, etc.) shall reference Schedule activities that are being addressed. All test reports (e.g., concrete, soil compaction, weld, pressure, etc.) shall reference schedule activities that are being addressed.

PART 2 PRODUCTS

Not used.

PART 3 EXECUTION

Not used.

-- End of Section --

SECTION 01 32 17.05 20

NETWORK ANALYSIS SCHEDULES (NAS) FOR DESIGN-BUILD
8/10

PART 1 GENERAL

1.1 DESCRIPTION

The Contractor is responsible for scheduling all design, procurement and construction. A single schedule shall logically incorporate all design and construction for the entire project. Unless otherwise indicated, the contractor may begin construction when design is signed, stamped and submitted to the Government via the Contractor's quality control organization.

If Government approval is required for any portion of a final signed and sealed design package prior to construction, that review time shall be included in the schedule. The schedule shall also include times for procurement, Contractor quality control and construction, acceptance testing and training. Refer to Specification Section 01 33 00.05 20 Construction Submittal Procedures to determine if any items require Government approval prior to construction; if any are required, that submittal review time shall be included in the schedule.

The schedule is a tool to manage the project, both for Contractor and Government activities. It will also be used to measure progress and to evaluate time extensions. If cost-loaded, it will provide the basis for progress payments.

The Contractor shall use the Critical Path Method (CPM) and the Precedence Diagram Method (PDM) to satisfy time and cost applications. For consistency, when scheduling software terminology is used in this specification, the terms in Primavera's scheduling programs are used.

1.2 SUBMITTALS

The use of a "G" following a submittal indicates that a Government approval action is required. Submit the following in accordance with Section 01 33 10.05 20 DESIGN SUBMITTAL PROCEDURES and Section 01 33 00.05 20 CONSTRUCTION SUBMITTAL PROCEDURES, except as modified in this contract.

SD-01 Preconstruction Submittals

Qualifications; G

Design Baseline Network Analysis Schedule Package; G

Construction Baseline Network Analysis Schedule Package; G

SD-07 Certificates

Monthly Network Analysis Schedule Updates; G

SD-11 Closeout Submittals

As-Built Schedule; G

1.3 SCHEDULE ACCEPTANCE PRIOR TO START OF WORK

Government review comments on the Contractor's schedule(s) shall not relieve the Contractor from compliance with requirements of the Contract Documents.

The Design Baseline Network Analysis Schedule (NAS) shall be submitted and presented to the Government at the PAK Meeting. The acceptance of a Design Baseline NAS is a condition precedent to processing Contractor's pay request(s) for design activities/items of work.

Only bonds shall be paid prior to acceptance of the Design Baseline Network Analysis Schedule (NAS).

The most current updated design schedule shall accompany each design submittal.

The Contracting Officer and Contractor shall participate in a preliminary meeting(s) to discuss the proposed schedule and requirements of this section prior to the Contractor preparing the Construction Baseline Schedule.

The acceptance of a Construction Baseline NAS is a condition precedent to:

1. The Contractor starting work on the demolition or construction stage(s) of the contract.

2. Processing Contractor's pay request(s) for construction activities/items of work.

3. Review of any schedule updates

Submittal of the Baseline Network Analysis Schedules, and subsequent schedule updates, shall be understood to be the Contractor's certification that the submitted schedule meets all of the requirements of the Contract Documents, represents the Contractor's plan on how the work shall be accomplished, and accurately reflects the work that has been accomplished and how it was sequenced (as-built logic).

1.4 SOFTWARE

Project schedules must be prepared and maintained using Primavera P3, Primavera SureTrak or current mandated scheduling program. Save files in Concentric P3 or current mandated scheduling program file format, compatible with the Governments version of the scheduling program. Importing data into P3/SureTrak/current mandated scheduling program using data conversion techniques or third party software will be cause for rejection of the submitted schedule.

1.5 QUALIFICATIONS

The designated Scheduler for the project shall have prepared and maintained at least 3 previous schedules of similar size and complexity of this contract using SureTrak/P3 or current mandated scheduling program. A resume outlining the qualifications of the Scheduler shall be submitted for acceptance to the Contracting Officer. Payment will not be processed until an acceptable Scheduler is provided.

1.6 NETWORK SYSTEM FORMAT

The system shall include time scaled logic diagrams and specified reports.

1.6.1 Diagrams

Provide Time-scaled Logic Diagram printed in color on ANSI D size sheets. The diagram shall clearly show activities on the critical path. Include the following information for each activity:

a. Activity ID

b. Activity Description

c. Original Duration in Work Days

d. Remaining duration

e. Percent Complete

f. Early Start Date

g. Early Finish Date

h. Total Float

1.6.2 Schedule Activity Properties and Level of Detail

The NAS shall identify all Design, Government, Construction Quality Management (CQM), Construction activities planned for the project and all other activities that could impact project completion if delayed. Separate activities shall be created for each Phase, Area, Floor Level and Location the activity is occurring. Activity categories included in the schedule are specified below.

With the exception of the Contract Award and Contract Completion Date (CCD) milestone activities, no activity shall be open-ended; each activity shall have predecessor and successor ties. Once an activity exists on the schedule it may not be deleted or renamed to change the scope of the activity and shall not be removed from the schedule logic without approval from the Contracting Officer. The ID number for a deleted activity shall not be re-used for another activity. No more than 20 percent of the activities shall be critical or near critical. Critical is defined as having zero days of Total Float. "Near Critical" is defined as having Total Float of 1 to 14 days. Contractor activities shall be driven by calendars that reflect Saturdays, Sundays and all Federal Holidays as non-work days.

1.6.2.1 Activity Categories

a. Design Activities: Design activities shall include design decision points, design submittal packages, including any critical path submittals for Fast Tracked Phases. Review times for design development packages shall be included in the schedule. Refer to Specification Section 01 33 10.05 20 Design Submittal Procedures, for specific requirements.

b. Procurement Activities: Examples of procurement activities include, but are not limited to; Material/equipment submittal preparation, submittal and approval of material/equipment; material/equipment fabrication and delivery, and material/equipment on-site. As a minimum, separate procurement activities will be provided for critical items, long lead items, items requiring government approval and material/equipment procurement for which payment will be requested in advance of installation. The Contractor shall show each delivery with

relationship tie to the Construction Activity specifically for the delivery.

c. Government Activities: Government and other agency activities that could impact progress shall be clearly identified. Government activities include, but are not limited to; Government approved submittal reviews, Government conducted inspections/tests, environmental permit approvals by State regulators, utility outages, Design Start, Construction Start, (including Design/Construction Start for each Fast-Track Phase, and delivery of Government Furnished Material/Equipment.

d. Quality Management (QM) Activities: CQM Activities shall identify the Preparatory Phase and Initial Phase for each Definable Feature of Work identified in the Contractor's Quality Control Plan. These activities shall be added to each Three-Week Look Ahead Schedule referenced in the paragraph entitled "THREE-WEEK LOOK AHEAD SCHEDULE" and will also be included in each monthly update. The Follow-up Phase will be represented by the Construction Activities in the Baseline Schedule and in the schedule updates.

e. Construction Activities: No on-site construction activity shall have a duration in excess of 20 working days. Separate construction activities shall be created for each Phase, Area, Floor Level and Location the activity is occurring. Contractor activities shall be driven by calendars that reflect Saturdays, Sundays and all Federal Holidays as non-work days, unless otherwise defined in this contract.

f. Turnover and Closeout Activities: Include a separate section with all items on the NAVFAC Red Zone Checklist/POAM that are applicable to this project. The checklist will be provided at the PAK meeting. As a minimum, this will include all testing, specialized inspection activities, Pre-Final inspection, Punch List Completion, Final Inspection and Acceptance. Add a milestone for the Facility Turnover Planning Meeting at approximately 75% construction contract completion or three to six months prior to BOD, whichever is sooner.

1.6.2.2 Contract Milestones and Constraints

a. Project Start Date Milestones: The Contractor shall include as the first activity on the schedule a start milestone titled "Contract Award", which shall have a Mandatory Start constraint equal to the Contract Award Date.

b. Projected Completion Milestone: The Contractor shall include an unconstrained finish milestone on the schedule titled "Projected Completion". Projected Completion is defined as the point in time the Government would consider the project complete and ready for its intended use. This milestone shall have the Contract Completion (CCD) milestone as its only successor.

c. Contract Completion Date (CCD) Milestone: The Contractor shall include as the last activity on the schedule a finish milestone titled "Contract Completion (CCD)", which shall have a Mandatory Finish constraint equal to the current Contract Completion Date. Calculation of schedule updates shall be such that if the finish of the "Projected Completion" milestone falls after the contract completion date, then negative float will be calculated on the longest path and if the finish of the "Projected Completion" milestone falls before the contract completion date, the float

calculation shall reflect positive float on the longest path. The only predecessor to the Contract Completion Date Milestone shall be the Projected Completion milestone .

1.6.2.3 Activity Code

At a minimum, the Contractor shall establish activity codes identified in this specification and 3 additional activity codes identified by the Contracting Officer. Once established, activity codes and values cannot be changed without approval by the Contracting Officer.

a. Phase: All activities shall be assigned a 4-digit code value based on the contract phase it occurs in.

b. Area Code: All activities shall be assigned an area code value identifying the Area in which the activity occurs. Activities shall not belong to more than one area. Area is defined as a distinct space, function or activity category; such as, separate structure(s), sitework, project summary, construction quality management, material/equipment procurement, etc.

c. Work Item: All activities in the project schedule shall be assigned a 4-digit Work Item code value. Examples of Work Item code values include but are not limited to water lines, drain lines, building pad and foundation, slab on grade, walls and columns, suspended slab, roof structure, roofing, exterior finish systems, interior rough-in, and finishes, etc.

d. Location 1: Assign a 4-digit Location 1 code value to activities associated with multistory structures. Code values are used to identify the floor level where an activity is occurring.

e. Location 2: Assign a 4-digit Location 2 code value to all activities to identify the location within an Area, Work Item or Building Level that an activity is occurring.

f. Responsibility Code: All activities in the project schedule shall be identified with the party responsible for completing the task. Activities shall not belong to more than one responsible party.

1.6.2.4 Anticipated Weather Delays

The Contractor shall use the [National Oceanic and Atmospheric Administration's (NOAA) historical monthly averages for the NOAA location closest to the project site][following schedule of anticipated monthly non-work days due to adverse weather]as the basis for establishing a "Weather Calendar" showing the number of anticipated non-workdays for each month due to adverse weather, Saturdays, Sundays and all Federal Holidays as non-work days.

MONTHLY ANTICIPATED ADVERSE WEATHER DELAYS

JAN	FEB	MAR	APR	MAY	JUN	JUL	AUG	SEP	OCT	NOV	DEC
7	5	5	4	5	6	10	11	11	10	7	7

Assign the Weather Calendar to any activity that could be impacted by adverse weather. The Contracting Officer will issue a modification in accordance with the contract clauses, giving the Contractor a time extension for the difference of days between the anticipated and actual adverse weather delay if the number of actual adverse weather delay days

exceeds the number of days anticipated for the month in which the delay occurs and the adverse weather delayed activities critical to contract completion. A lost workday due to weather conditions is defined as a day in which the Contractor cannot work at least 50 percent of the day on the impacted activity.

1.6.2.5 Cost Loading

a. Cost Loading Activities: Costs for incremental design preparation shall be assigned to the respective design phase submittal milestone(s). Material and Equipment Costs for which payment will be requested in advance of installation shall be assigned to their respective procurement activity (i.e., the material/equipment on-site activity). All other construction costs shall be assigned to their respective Construction Activities. The value of inspection/testing activities shall not be less than 10 percent of the total costs for Procurement and Construction Activities. Evenly disperse overhead and profit to each activity over the duration of the project.

b. Quantities and Units of Measure: Each cost loaded activity shall have a detailed quantity breakdown and unit of measure.

1.6.3 Schedule Software Settings and Restrictions

a. Activity Constraints: Date/time constraint(s), other than those required by the contract, will not be allowed unless accepted by the Contracting Officer. Identify any constraints proposed and provide an explanation for the purpose of the constraint in the Narrative Report.

b. Default Progress Data Disallowed: Actual Start and Actual Finish dates on the CPM schedule shall match the dates on the Contractor Quality Control and Production Reports.

c. Software Settings: Schedule calculations and Out-of-Sequence progress (if applicable) shall be handled through Retained Logic, not Progress Override. All activity durations and float values will be shown in days. Activity progress will be shown using Remaining Duration. Default activity type will be set to "Task". The project "Must Finish By" date shall be left blank.

1.6.4 Required Tabular Reports

The following reports shall be included with the schedule and update submittals:

a. Log Report: Listing of all changes made between the previous schedule and current updated schedule.

b. Narrative Report: Identify and justify; 1) Progress made in each area of the project; 2) Critical Path; 3) Date/time constraint(s), other than those required by the contract 3) Changes in the following; added or deleted activities, original and remaining durations for activities that have not started, logic, milestones, planned sequence of operations, critical path, and cost loading; 4) Any decrease in previously reported activity Earned Amount; 5) Pending items and status thereof, including permits, changes orders, and time extensions; 6) Status of Contract Completion Date and interim milestones; 7) Current and anticipated delays (describe cause of delay and corrective actions(s)); and 8) Description of current and future

schedule problem areas. Each entry in the narrative report will cite the respective Activity ID and Activity Description, the date and reason for the change, and description of the change.

c. Earned Value Report: Listing all activities having a budget amount cost loaded. Compilation of total earnings on the project from notice to proceed to current progress payment request. Group and sort activities as directed by the Contracting Officer. Show current budget, previous physical percent complete, to-date physical percent complete, previous earned value, to-date earned value and cost to complete on the report for each activity:

d. Schedule Variance Control (SVC) Diagram: With each schedule submission, provide a SVC diagram showing 1) Cash Flow S-Curves indicating planned project cost based on projected early and late activity finish dates and 2) Earned Value to-date. Revise Cash Flow S-Curves when the contract is modified, or as directed by the Contracting Officer.

1.7 SUBMISSION AND ACCEPTANCE

The Design Baseline NAS shall include detailed design activities, general (summarized) approach for the construction phase(s) of the project and required milestone activities. If the project is being Fast-Tracked or allows Early Start of construction, the Design Baseline Project Schedule shall include all fast-tracked design construction phases, etc., including the required or proposed critical path design submittals within each phase that shall occur during the duration of the project.

The Contractor shall develop the Construction Baseline Schedule as design progresses, with detailed construction activities. If design must be completed and accepted prior to construction, submit the complete design and construction network analysis schedule and obtain acceptance prior to starting construction work. If the project will be Fast-Tracked, each construction stage shall be detailed and built upon the previous Fast-Tracked Baseline Schedule (including any interim updates) and accepted prior to starting that stage of the construction work. Payment for completed work is dependent on an accepted, detailed schedule for that portion of work.

1.7.1 Monthly Network Analysis Updates

Contractor and Government representatives shall meet at monthly intervals to review and agree on the information presented in the updated project schedule. The submission of an acceptable, updated schedule to the Government is a condition precedent to the processing of the Contractor's pay request. If a Schedule of Prices is the basis for progress payments, it shall be consistent with the logic and activity breakdowns on the progress schedule. If progress payments are based on a cost-loaded schedule, the Contractor and Government shall agree on percentage of payment for each activity progressed during the update period.

Provide the following with each Schedule submittal:

a. Time Scaled Logic Diagram.

b. Reports listed in paragraph entitled "Required Tabular Reports."

c. Data disks containing the project schedule. Include the back-up native .prx/current mandated schedule program files.

1.7.2 As-Built Schedule

As a condition precedent to the release of retention and making final payment, submit an "As-Built Schedule," as the last schedule update showing all activities at 100 percent completion. This schedule shall reflect the exact manner in which the project was actually constructed.

1.8 CONTRACT MODIFICATION

Submit a Time Impact Analysis with each cost and time proposal for a proposed change. Time Impact Analysis (TIA) shall illustrate the influence of each change or delay on the Contract Completion Date or milestones. No time extensions will be granted nor delay damages paid unless a delay occurs which consumes all available Project Float, and extends the Projected Finish beyond the Contract Completion Date.

a. Each TIA shall be in both narrative and schedule form demonstrating the delay impact. The TIA shall identify the predecessors to the new activities and demonstrate the impacts to successor activities. The Contractor shall run the schedule calculations and submit the impacted schedule with the proposal or claim.

b. The TIA schedule submitted with the proposal shall show all activity progress as of the date of the proposal. If the impact to the schedule occurs prior to the proposal submission, the TIA schedule shall be updated to show all activity progress as of the time of the impact. If the proposed change does not impact the CCD, no TIA shall be required.

c. Submit Data disks containing the TIA schedule. Include the back-up native .prx/current mandated schedule program files.

d. Unless the Contracting Officer requests otherwise, only conformed contract modifications shall be added into the Project NAS.

1.9 FLOAT

Project Float is the length of time between the Contractor's Projected Finish Milestone and the Contract Completion Date Milestone. Project Float available in the schedule, at any time shall not be for the exclusive use of either the Government or the Contractor.

1.10 THREE-WEEK LOOK AHEAD SCHEDULE

The Contractor shall prepare and issue a 3-Week Look Ahead schedule to provide a more detailed day-to-day plan of upcoming work identified on the Project Network Analysis Schedule. The work plans shall be keyed to NAS activity numbers and updated each week to show the planned work for the current and following two-week period. Additionally, include upcoming outages, closures, preparatory meetings, and initial meetings. Identify critical path activities on the Three-Week Look Ahead Schedule. The detail work plans are to be bar chart type schedules, maintained separately from the Project NAS on an electronic spreadsheet program and printed on 8-Â½ by 11 sheets as directed by the Contracting Officer. Activities shall not exceed 5 working days in duration and have sufficient level of detail to assign crews, tools and equipment required to complete the work. Three hard copies and one electronic file of the 3-Week Look Ahead Schedule shall be delivered to the Contracting Officer no later than 8 a.m. each Monday and reviewed during the weekly CQC Coordination Meeting.

PART 2 PRODUCTS

Not used.

PART 3 EXECUTION

Not used.

-- End of Section --

SECTION 01 33 00.05 20

CONSTRUCTION SUBMITTAL PROCEDURES
09/10

PART 1 GENERAL

1.1 RELATED REQUIREMENTS

This section covers construction submittals that are not included in the design submittals. Submit design submittals in accordance with 01 33 10.05 20 DESIGN SUBMITTAL PROCEDURES. When using Unified Facility Guide Specifications (UFGS) sections that reference Section 01 33 00 SUBMITTAL PROCEDURES, change reference to this section, Section 01 33 00.05 20 CONSTRUCTION SUBMITTAL PROCEDURES.

1.2 SUBMITTAL DESCRIPTIONS (SD)

Submittal requirements are specified in Unified Facilities Guide Specifications (UFGS) in Part 2, GENERAL REQUIREMENTS; in references in Part 4 PERFORMANCE TECHNICAL SPECIFICATIONS; and in UFGSs in Part 5, PRESCRIPTIVE SPECIFICATIONS. Submittals that are identified by SD numbers use descriptions of items included in submittal packages and titles as follow:

SD-01 Preconstruction Submittals

Certificates of insurance.
Surety bonds.
List of proposed subcontractors.
List of proposed products.
Construction Progress Schedule.
Submittal register.
Schedule of values.
Health and safety plan.
Work plan.
Quality control and Commissioning plans.
Environmental protection plan.

SD-02 Shop Drawings

Drawings, diagrams and schedules specifically prepared to illustrate some portion of the work.

Diagrams and instructions from a manufacturer or fabricator for use in producing the product and as aids to the Contractor for integrating the product or system into the project.

Drawings prepared by or for the Contractor to show how multiple systems and interdisciplinary work will be coordinated.

SD-03 Product Data

Catalog cuts, illustrations, schedules, diagrams, performance charts, instructions and brochures illustrating size, physical appearance and other characteristics of materials or equipment for some portion of the work.

Samples of warranty language when the contract requires extended product warranties.

SD-04 Samples

Physical examples of materials, equipment or workmanship that illustrate functional and aesthetic characteristics of a material or product and establish standards by which the work can be judged.

Color samples from the manufacturer's standard line (or custom color samples if specified) to be used in selecting or approving colors for the project.

Field samples and mock-ups constructed on the project site establish standards by which the ensuring work can be judged. Includes assemblies or portions of assemblies which are to be incorporated into the project and those which will be removed at conclusion of the work.

SD-05 Design Data

Calculations, mix designs, analyses or other data pertaining to a part of work.

SD-06 Test Reports

Report signed by authorized official of testing laboratory that a material, product or system identical to the material, product or system to be provided has been tested in accord with specified requirements. (Testing must have been within three years of date of contract award for the project.)

Report which includes findings of a test required to be performed by the Contractor on an actual portion of the work or prototype prepared for the project before shipment to job site.

Report which includes finding of a test made at the job site or on sample taken from the job site, on portion of work during or after installation.

Investigation reports.

Daily checklists.

Final acceptance test and operational test procedure.

SD-07 Certificates

Statements signed by responsible officials of manufacturer of product, system or material attesting that product, system or material meets specification requirements. Must be dated after award of project contract and clearly name the project.

Document required of Contractor, or of a supplier, installer or subcontractor through Contractor, the purpose of which is to further quality of orderly progression of a portion of the work by documenting procedures, acceptability of methods or personnel qualifications.

Confined space entry permits.

SD-08 Manufacturer's Instructions

Preprinted material describing installation of a product, system or

material, including special notices and Material Safety Data sheets concerning impedances, hazards and safety precautions.

SD-09 Manufacturer's Field Reports

Documentation of the testing and verification actions taken by manufacturer's representative to confirm compliance with manufacturer's standards or instructions.

Factory test reports.

SD-10 Operation and Maintenance Data

Data that is furnished by the manufacturer, or the system provider, to the equipment operating and maintenance personnel. This data is needed by operating and maintenance personnel for the safe and efficient operation, maintenance and repair of the item.

SD-11 Closeout Submittals

Documentation to record compliance with technical or administrative requirements or to establish an administrative mechanism.

Special requirements necessary to properly close out a construction contract. For example, Record Drawings, As-built drawings, DD Form 1354, and Sustainable and Energy Data Record Card. Also, submittal requirements necessary to properly close out a major phase of construction on a multi-phase contract.

1.3 SUBMITTALS

The use of a "G" following a submittal indicates that an approval action is required, either by the Government or by the Contractor's Designer of Record (DOR) or QC Specialist.

Submit the following in accordance with the requirements of this section.

SD-01 Preconstruction Submittals

Submittal Register Format; G

1.3.1 Submittal Register

The submittal register will be prepared during the initial design stages of the project and indicate each design and construction submittal. Maintain an electronic version of the submittal register as work progresses. The DOR must assist the DQC in preparing the submittal register by determining all project submittals that require DOR approval. The Contractor proposed submittal register format must include all types of information pertinent to the submittal process and be approved by the Contracting Officer prior to the first submission.

1.4 CONSTRUCTION QUALITY CONTROL

1.4.1 Contractor Reviewing, Certifying, Approving Authority

The QC organization is responsible for reviewing and certifying that submittals are in compliance with the contract requirements.

In RFP PART 4 PERFORMANCE TECHNICAL SPECIFICATIONS (PTS), there are UFGS

specification sections required to be submitted as part of the design submittal. Unless specified otherwise in this section, the Contractor's DOR is the approving authority for submittals listed in these UFGS specifications with a "G" designation, unless the DOR delegates to Contractor Quality Control approval. RFP Part 4 PTS sections also include submittals identified for DOR approval that are not denoted with a "G" designation, these submittals cannot be delegated for Contractor Quality Control approval.

If RFP PART 5 PRESCRIPTIVE SPECIFICATIONS are utilized in this RFP, the Contractor's DOR is the approving authority for submittals listed with a "G" designation, unless the DOR delegates to Contractor Quality Control approval.

DOR shall approve construction submittals that are incorporated in the design submittal prior to being submitted to the Government for design submittal approval. Indicate approval of these construction submittals on the accompanying submittal transmittal forms and the submittal register for each design submittal package. In addition, the DOR professional stamp on the final design submittal indicates approval of construction submittals combined with the design submittal.

Submittal items identified in RFP PARTS 2, 4, and 5 that are not identified with a "G" designation or not designated for DOR approval (in RFP Part 4) are for Contractor Quality Control approval.

Construction submittals that are approved by the DOR or certified by the QC are not required to be submitted to the Government for surveillance, except when the RFP requires the design and construction submittals to be combined in UFGS section 01 33 10.05 20, *Design Submittal Procedures* or where specified in paragraph SUBMITTALS RESERVED FOR GOVERNMENT SURVEILLANCE of this section.

1.4.2 Submittals Reserved for Government Approval

The Government is the approving authority for submittals with a "G" designation in RFP Part 2 GENERAL REQUIREMENTS specification sections. Comply with additional Government approval requirements for Environmental submittals, as specified in RFP Part 2, Section 01 57 19.05 20 TEMPORARY ENVIRONMENTAL CONTROLS FOR DESIGN-BUILD and 01 57 19.01 20, SUPPLIMENTARY TEMPORARY ENVIRONMENTAL CONTROLS.

1.4.2.1 Scheduling for Government Approved Submittals

Except as specified otherwise, allow review period, beginning when Government receives submittal from the QC organization, of 10 working days for return of submittal to the Contractor. Period of review for submittals with Contracting Officer approval begins when Government receives submittal from QC organization. Period of review for each resubmittal is the same as for initial submittal.

1.4.3 Submittals Reserved for Government Surveillance

Surveillance submittals are approved by the Contractor in accordance with paragraph CONTRACTOR REVIEWING, CERTIFYING, AND APPROVING AUTHORITY, but provide the Government the opportunity to oversee critical project issues.

If during the Government surveillance of construction submittals, items are brought to the Contractor's attention as non-compliant, the Contractor shall correct the submittal and construction to comply with the requirements of the RFP. Stamp surveillance submittals "APPROVED" by the

DOR or QC Specialist and "FOR SURVEILLANCE ONLY." Submit the following Government surveillance submittals, prior to starting work for construction submittal items, and after the completion of the work for reports submittals items.

a. Submit fire protection related submittals pertaining to spray-applied fire proofing and fire stopping, exterior fire alarm reporting systems, interior fire alarm & detection systems, and fire suppression systems including fire pumps and standpipe systems.

b. Submit geotechnical related submittals pertaining to the soils investigations (reports and soils analysis), foundations (shallow and deep), pavements structure design, test pile and production pile testing and installation.

c. Submit conveying related submittals pertaining to elevators, escalators, weight handling equipment, lifts, and conveyors.

d. Submit roofing submittals pertaining to materials and systems used to make up the roof system.

e. Submit HVAC Testing, Adjusting, and Balancing required submittals.

f. Submit telecommunications shop drawings, as described in Part 4, D50 ELECTRICAL, for coordination with the NMCI Contractor.

g. Submit Performance Verification and Acceptance Testing submittals listed in the PTS and referenced UFGS.

h. Submit all Interim Special Inspection Reports on a bi-weekly basis until work requiring special inspections is complete. Submit all Structural Observation Reports and the Final Report of Special Inspections.

i. Submit Final LEED Certification Documentation for US Green Building Council Certification.

1.4.4 Constraints

a. Submittals shall be complete for each definable feature of work; submit components of definable feature interrelated as a system at the same time.

b. Approval of a separate material, product, or component does not imply approval of assembly in which item functions.

1.4.5 Design Change and Variation

The Contractor must limit change and variation to items that will be advantageous to the Government. Submit proof that the change is needed and provide the same or better level of quality as the design that the Government originally reviewed or approved. Design change is considered prior to Government approval of the final design and variation is considered after Government approval of final design. Documentation provided to the Government shall include coordination measures proposed to incorporate the design change or variation into the construction.

1.4.5.1 Design Change

Design change must meet the minimum requirements of the solicitation and the accepted proposal. Change from what was reviewed by the Government during design must be approved by the Designer of Record and brought to the attention of the Government before the design change is incorporated into the design documents.

1.4.5.2 Variations

Variations from contract requirements including the solicitation, the accepted proposal, and the final design, requires Government approval. Variations to the contract requirements must be approved by the Designer of Record prior to resubmitting the design to the Government for approval of the variation.

1.4.6 Contractor's Responsibilities

Ensure no work has begun until submittals for that work have been "approved" or "approved as noted."

1.4.7 QC Organization Responsibilities

Stamp each sheet of each submittal with QC certifying statement or approving statement, except that data submitted in bound volume or on one sheet printed on two sides may be stamped on the front of the first sheet only.

a. When approving authority is Contracting Officer, QC organization will certify submittals, assure proper signatures, and forward to Contracting Officer with the following certifying statement:

"I hereby certify that the (equipment) (material) (article) shown and marked in this submittal is that proposed to be incorporated with contract Number (insert contract number here), is in compliance with the contract documents, can be installed in the allocated spaces, and is submitted for Government approval.

RFP Part Two Submittals:

Certified by QC Manager _____, Date _____
(QC Manager)

RFP Part Four and Part Five Submittals:

Certified by DOR _____, Date _____

Certified by QC Manager _____, Date _____"

(1) Sign certifying statement or approval statement. The person signing certifying statements shall be QC organization member designated in the approved QC plan. The signatures shall be in original ink. Stamped signatures are not acceptable.

(2) Update submittal register database as submittal actions occur and maintain the submittal register at project site until final acceptance of all work by Contracting Officer.

(3) Retain a copy of approved submittals at project site, including Contractor's copy of approved samples.

b. When the Approving Authority is the Designer of Record, the DOR shall approve, professionally stamp, sign, and date submittals. DOR stamp on construction submittals or submission of design documents that include construction submittals indicates DOR

approval for construction. QC organization will certify submittals, assure proper signatures, and forward to Contracting Officer with the following certifying statement:

"I hereby certify that the (equipment) (material) (article) shown and marked in this submittal is that proposed to be incorporated with contract Number (insert contract number here), is in compliance with the contract requirements, can be installed in the allocated spaces, and is submitted for DOR approval.

RFP Part Four and Part Five Submittals:

Approved by DOR _____, Date _____

Certified by QC Manager _____, Date _____"

(1) Sign certifying statement or approval statement. The person signing certifying statements shall be QC organization member designated in the approved QC plan. The signatures shall be in original ink. Stamped signatures are not acceptable.

(2) Update submittal register database as submittal actions occur and maintain the submittal register at project site until final acceptance of all work by Contracting Officer.

(3) Send copies of final DOR or QC Specialist approved and signed submittals that are identified in this section for Government surveillance to the Contracting Officer. Stamp copies "For Surveillance Only."

1.4.8 Government's Responsibilities

When approving authority is the Contracting Officer, the Government will:

a. Note date on which submittal was received from QC Manager, on each submittal.

b. Review submittals for compliance with contract documents.

1.4.8.1 Government Actions

Submittals will be returned with one of the following notations:

a. Submittals marked "approved" or "approved as submitted" authorize Contractor to proceed with work covered.

b. A submittal marked "not reviewed" will be returned with an explanation of the reason it was not reviewed.

c. Submittals marked "approved as noted" or "approval except as noted; resubmission not required" authorize Contractor to proceed with work as noted provided Contractor takes no exception to the notations.

d. Submittals marked "revise and resubmit" or "disapproved" indicate submittal is incomplete or does not comply with design concept or requirements of the contract documents and shall be resubmitted with appropriate changes. No work shall proceed for this item until resubmittal is approved.

e. Submittals required for surveillance will be returned only if corrective actions are required.

1.5 FORMAT OF SUBMITTALS

1.5.1 Transmittal Form

Transmit submittals with transmittal form prescribed by Contracting Officer and standard for the project.

1.5.1.1 Combined Design and Construction Submittal Notification

Indicate on the design submissions transmittal form, which construction submittals have been combined with the design documents. Coordinate transmittal form list of combined design and construction submittals with submittal register to indicate DOR approval of all combined submittals.

1.6 QUANTITY OF SUBMITTALS

1.6.1 Quantity of Submittals Reserved for Government Approval

Submit four (4) copies of submittals of shop drawings requiring review and approval by Contracting Officer.

1.6.2 Quantity of Submittals Reserved for Government Surveillance

Submit three (3) copies of submittals specified for surveillance to the Contracting Officer if not electronically submitted in WebCM. Submit two additional copies of elevator submittals directly to the NAVFAC Elevator Specialist responsible for the NAVFAC elevator certification of the project.

1.7 FORWARDING SUBMITTALS

1.7.1 Overseas Shop Drawing Submittals

All submittals shall be sent via overnight express mail service. All costs associated with the overnight express mail service shall be borne by the Contractor. Costs associated with the overnight express mail of submittals related to proposed submittal variances of resubmittals necessary as a result of noncompliant or incomplete contractor submittals shall be the responsibility of the Contractor.

PART 2 PRODUCTS

Not used.

PART 3 EXECUTION

Not used.

-- End of Section --

SECTION 01 33 10.05 20

DESIGN SUBMITTAL PROCEDURES
11/10

PART 1 GENERAL

1.1 SUMMARY

This section includes requirements for Contractor-originated design documents and design submittals.

1.2 REFERENCES

The publications listed below form a part of this specification to the extent referenced. The publications are referred to within the text by the basic designation only. The latest version of the publication at time of award shall be used.

U. S. GREEN BUILDING COUNCIL

USGBC LEED-NC V3	USGBC LEED for New Construction Green Building Rating System
USGBC LEED-NC V3	USGBC LEED for New Construction Reference Guide

U.S. DEPARTMENT OF DEFENSE (DOD) UNIFIED FACILITIES CRITERIA (UFC)

UFC 1-200-01, GENERAL BUILDING REQUIREMENTS

UFC 1-200-01 including the referenced DoD Tri-Service Core UFC Documents and the required building codes/standards comprise the general building requirements for the project. These Core UFC documents apply to all facilities, and unless noted below, are found on the Whole Building Design Guide UFC website.

OTHER APPLICABLE UFC DOCUMENTS

(Not referenced in UFC 1-200-01)

UFC 1-300-08	Criteria for Transfer and Acceptance of DoD Real Property
UFC 1-300-09N	Design Procedures
UFC 3-201-02	Landscape Architecture

UFC 3-600-10N	Fire Protection Engineering(UFC 3-600-10N is only available on the NAVFAC Design-Build Website under the Design Guidance link. This Draft UFC is applicable as a Final document for Navy projects.)
UFC 3-800-10N	Environmental Engineering for Facility Construction(UFC 3-800-10N is only available on the NAVFAC Design-Build Website under the Design Guidance link. This Draft UFC is applicable as a Final document for Navy projects.)
UFC 3-580-10	Design: Navy and Marine Corps Intranet (NMCI) Standard Construction Practices

1.3 GENERAL DESIGN REQUIREMENTS

Contractor-originated design documents shall provide a project design that complies with the Request For Proposal (RFP), UFC 1-300-09N, UFC 1-200-01, the Core UFCs, and other UFC's listed above.

1.4 SUBMITTALS

Submit design submittals, including shop drawings used as design drawings, to the Government for approval. The use of a "G" following a submittal indicates that a Government approval action is required. Submit the following in accordance with this section and Section 01 33 00.05 20 CONSTRUCTION SUBMITTAL PROCEDURES.

SD-01 Preconstruction Submittals

Consolidated RFP Documents; G

Submittal Register; G

SD-04 Samples

Final framed rendering and copies; G

SD-05 Design Data

Design Drawings; G

Specifications; G

Design Analysis; G

Design Submittals; G

Sustainable Design; G

Project Rendering; G

SD-07 Certificates

LEED Green Building Rating System (GBRS)); G

LEED Certification Registration Application; G

LEED Certification; G

SD-11 Closeout Submittals

Record Documents; G

NAVFAC Sustainable and Energy Data Record Card; G

DD Form 1354; G

1.5 DESIGN QUALITY CONTROL

1.5.1 Contractor Reviewing and Certifying Authority

The QC organization is responsible for reviewing and certifying that design submittals are in compliance with the contract requirements.

1.5.2 Government Approving Authority

The Contracting Officer is the approving authority for design submittals.

1.5.3 Designer of Record Certifying Authority

The Designer of Record (DOR), as registered and defined in UFC 1-300-09N, is the design certifying authority. The DOR accepts responsibility for design of work in each respective design discipline, by stamping and approving final construction drawings submitted to the Government approval authority.

1.5.4 Contractor Construction Actions

Upon submission of sealed and signed design documents certified by the DOR, Design Quality Control (DQC) Manager and the Quality Control (QC) Managers, the Contractor may proceed with material and equipment purchases, fabrication and construction of any elements covered by that submittal[, except as specified in the following paragraph].

1.5.4.1 Exception to Contractor Construction Actions

The Government will approve the following final submittals before the Contractor shall be allowed to proceed with construction:

a. Any design submittal that includes or will be impacted by a variation to the contract. Final Government approval of the variation is required before construction can begin on the work included in that design submittal.

1.5.5 Contractor's Responsibilities

a. Designate a lead licensed architect or engineer to be in responsible charge to coordinate the design effort of the entire project. This lead architect or engineer shall coordinate all design segments of the project to assure consistency of design between design disciplines.

b. With the Designer or Record, verify site information provided in the RFP. In addition, provide additional field investigations and verification of existing site conditions as may be required to support the development of design and construction of the project.

c. Indicate on the transmittal form accompanying submittal which design submittals are being submitted as shop drawings.

d. Advise Contracting Officer of variations, as required by paragraph "Variations."

e. Provide an updated, cumulative submittal register with each design package that identifies the design and construction submittals required by that design package and previous submittals.

1.5.6 QC Organization Responsibilities

a. Both the CA and the QC Manager must certify design submittals for compliance with the contract documents. The DOR stamp on drawings indicates approval from the DOR.

b. QC organization shall certify submittals forwarded by the Designer of Record (DOR) to the Contracting Officer with the following certifying statement:

"I hereby certify that the (equipment) (material) (article) shown and marked in this submittal is that proposed to be incorporated with Contract Number (insert contract number here), is in compliance with the contract documents, and is submitted for Government approval.

Certified by Design Quality Control (DQC) Manager
_____,
Date _____

Certified by QC Manager_____,
Date _____"

c. Sign certifying statement. The persons signing certifying statements shall be the QC organization members designated in the approved QC plan. The signatures shall be in original ink. Stamped signatures are not acceptable.

d. Update submittal register as submittal actions occur and maintain the submittal register at project site until final approval of all work by Contracting Officer.

e. Retain a copy of approved submittals at project site.

1.5.7 Government Responsibilities

The Government will

a. Note date on which submittal was received from QC manager, on each submittal.

b. Perform a quality assurance (QA) review of submittals. Government will notify Contractor when comments for that design package are posted and ready for Contractor evaluation and resolution.

c. Upon submittal of final design package and resolution of comments by the Contractor, the Government will sign final design package, when approved, and return electronic copy of signed design documents to the Contractor.

1.5.7.1 Actions Possible

Submittals will be returned with one of the following notations:

a. Submittals may be marked "approved."

b. Submittals marked "not reviewed" will indicate submittal has been previously reviewed and approved, is not required, does not have evidence of being reviewed and certified by Contractor, or is not complete. Submittal will be returned with an explanation of the reason it is not reviewed. Resubmit submittals returned for lack of review by Contractor or for being incomplete, with appropriate action, coordination, or change.

c. Submittals marked "revise and resubmit" or "disapproved" indicate submittal is incomplete or does not comply with design concept or requirements of the contract documents and shall be resubmitted with appropriate changes. If work has been started on the unacceptable portion of the design submittal, the Contractor shall propose corrective action. No further work shall proceed until the issue is resolved in a manner satisfactory to the Government.

1.6 DESIGN DOCUMENTS

Provide design documents that include design analysis, design drawings, and design specifications, reports, and submittal register in accordance with UFC 1-300-09N, *Submittal Procedures.*

The Contractor is required to make product, material, and system selections during the project design and indicate these choices on the design documents. Accomplish this by submitting design drawings and specifications that include proprietary submittal information such as manufacturers name, product names, model numbers, product data, manufactures information, provided optional features, appropriate connections, fabrication, layout, and product specific drawings. Adherence to RFP submittal requirements and provision of DOR approved construction submittal information on the design submittals - eliminates the need for follow-on traditional construction submittals after the final design is approved.

The Contractor is required to submit proprietary information to describe the construction submittal information in the design documents for all products, materials, and systems submittals listed below:

a. All building envelope components

b. All roof components

c. Major mechanical and electrical equipment such as transformers,switchgear and air handling units.

d. Interior finishes

e. All products, materials, and systems on the project.

Refer to 01 33 00.05 20, *Construction Submittal Procedures* for requirements pertaining to Contractor proposed design changes or variations.

1.7 DESIGN DRAWINGS

Prepare, organize, and present design drawings in accordance with the requirements of UFC 1-300-09N, *Design Procedures*.

Submit all CADD files for the final drawings on CD-ROM disks in AutoCAD format. Drawing files shall be full files, uncompressed and unzipped.

1.7.1 Design Drawings Used as Shop Drawings

Design drawings may be prepared more like shop drawings to minimize construction submittals after final design is approved. If the Contractor chooses or is required to include the construction submittal information on the design documents, indicate proprietary information on the design drawings as necessary to describe the products, materials, or systems that are to be used on the project. Construction submittal information included directly in the design drawings must be approved by the DOR. All design documents must be professionally signed in accordance with UFC 1-300-09N, *Design Procedures*.

1.7.2 Drawing Format For Design Drawings Used as Shop Drawings

The Contractor-originated drawings will be used as the basis for the record drawings. Shop drawings included as design documents shall comply with the same drawing requirements such as drawing form, sheet size, layering, lettering, and title block used in design drawings.

1.7.3 Identification of Design Drawings Used as Shop Drawings

The Contractor's transmittal letter and submittal register shall indicate which design drawings are being submitted as shop drawings.

1.7.4 Naval Facilities (NAVFAC) Engineering Command Drawing Numbers

Number the final Contractor-originated design drawings consecutively with NAVFAC drawing numbers. Determine the total number of sheets required for the complete set of drawings before requesting the NAVFAC drawing numbers from the Contracting Officer.

1.7.5 Seals and Signatures on Documents

All final Contractor-originated design drawings shall be signed, dated, and bear the seal of the registered architect or the registered engineer of the respective discipline in accordance with UFC 1-300-09N. This seal shall be the seal of the Designer of Record for that drawing, and who is professionally registered for work in that discipline. A principal or authorized licensed or certified employee shall electronically sign and date final drawings and cover sheet, in accordance with UFC 1-300-09N. The design drawing coversheets shall be sealed and signed by the lead licensed architect or engineer of the project design team. Indicate the Contractor's company name and address on the drawing coversheets of each

design submittal. Application of the electronic seal and signature accepts responsibility for the work shown thereon.

1.7.6 Units of Measure

Utilize [English Inch-Pound] [Metric] units of measure on the design documents

1.8 SPECIFICATIONS

Provide a Contractor-originated design specification that in conjunction with the drawings, demonstrates compliance with requirements of the RFP. The specified products, materials, systems, and equipment that are approved by the DOR; submitted to the Government by the Contractor; and reviewed by the Contracting Officer shall be used to construct the project. UFGS sections contained in RFP Part 2 shall become a part of the Contractor-originated Division 01 specification without modification. Specification Sections contained in RFP Part 5 shall become a part of the Contractor-originated specification without modification.

The specification coversheet shall be prepared and signed by the lead licensed architect or engineer of the project design team. Indicate the Contractor's company name and address on the specification coversheet of each design submittal.

1.8.1 Specifications Format

The Contractor shall prepare design specifications that include a UFGS specification for each product, material, or system on the project. If the Contractor chooses or is required above to combine design and construction submittal information on the design documents, provide a UFGS specification and also proprietary information such as catalog cuts and manufacturers data that demonstrates compliance with the RFP. Organize the specifications using Construction Specification Institute (CSI) Masterformat™ unless the Contracting Officer requires a Uniformat organization. Provide project specifications to include the following:

1. Specification cover sheet with professional signature

2. Table of contents for entire specification.

3. Individual UFGS specification sections for each product, material, and system required by the RFP. Edit UFGS sections in accordance with RFP Part 2, PTS Section Z-10, Design Submittals.

4. If proprietary information is provided or required, include a coversheets for the product, material, or system information that is being proprietarily specified. This information is to follow the related UFGS specification.

5. If proprietary information is provided or required, include highlighted and annotated Catalog Cuts, Manufacturer's Product Data, Tests, Certificates, Manufactures information and letters for each product, material, or system that is being proprietary specified.

6. Coordinated Submittal Register for all products, materials and systems in the submittal. Obtain and indicate DOR approvals for all combined design and construction submittals.

1.8.2 Specifications Section Source Priority

Choose UFGS Sections that describe the products, materials, and systems that are used on the project. Use current UFGS Sections that are available on the Whole Building Design Guide website and give priority to the UFGS sections that are prepared by NAVFAC. Only use UFGS sections prepared by other Agencies if an applicable NAVFAC prepared specification section does not exist.

1.8.3 Identification of Manufacturer's Product Data Used as Specifications.

Provide complete and legible catalog cut sheets, product data, installation instructions, operation and maintenance instructions, warranty, and certifications for products and equipment for which final material and equipment choices have been made. Indicate, by prominent notation, each product that is being submitted including optional manufacturer's features, and indicate where the product data shows compliance with the RFP.

1.8.4 Submittal Register

Submit a current submittal register with each design submittal. Provide a cumulative register that identifies the design and construction submittals required by each design package along with previous submittals. The DOR shall assist in developing the submittal register by determining which submittal items are required to be approved by the DOR. To obtain Government approval of the final design package, complete all fields in the submittal register.

1.8.5 Specification Software

Submit the final specification source files in either MS Word or SpecsIntact.

1.8.6 Fire Protection Specifications

Specifications pertaining to spray-applied fire proofing and fire stopping, exterior fire alarm reporting systems, interior fire alarm and detection systems, and fire suppression systems, including fire pumps and standpipe systems shall be either prepared by, or reviewed and approved by the Fire Protection DOR.

1.9 DESIGN ANALYSIS

Prepare, organize, and present design analysis in accordance with the requirements of UFC 1-300-09N. The design analysis shall be a presentation of facts[at the Concept Design Workshop] to demonstrate the concept of the project is fully understood and the design is based on sound engineering principles. Provide design analyses for each discipline and include the following:

a. Basis of design that includes:

(1) An introductory description of the project concepts that addresses the salient points of the design;

(2) An orderly and comprehensive documentation of criteria and rationale for system selection; and

(3) The identification of any necessary licenses and permits that are anticipated to be required as a part of the design and/or construction process. [The "Permits Record of Decision" (PROD) form provided shall be used for recording permits.]

b. Code and criteria search shall identify all applicable codes and criteria and highlight specific requirements within these codes and criteria for critical issues in the facility design.

c. Calculations as specified and as needed to support this design.

d. Section titled "Sustainable Design" that addresses sustainable concepts and LEED Rating Analysis Report prepared by a LEED Accredited Professional recognized by the U.S. Green Building Council.

e. Draft and Final NAVFAC Sustainable and Energy Data Record Card (NSEDRC) that documents the energy usage and sustainable features of the building. Refer to Record Documents paragraphs in this section for requirements.

f. Section titled "Antiterrorism" that documents the antiterrorism features

g. Fall Protection Analysis

h. Draft and Interim DD Form 1354 that document the real property assets of the project. Refer to Record Documents paragraphs in this section for requirements.

1.9.1 Basis of Design Format

The basis of design for each design discipline shall include a cover page indicating the project title and locations, contract number, table of contents, tabbed separations for quick reference, and bound in separate volumes for each design discipline.

1.9.2 Design Calculations

Place the signature and seal of the designer responsible for the work on the cover page of the calculations for the respective design discipline.

1.9.3 Sustainable Design

Integrate sustainable strategies and features into the design to minimize the energy consumption of the facilities; conserve resources; minimize adverse effects to the environment; and improve occupant productivity, health, and comfort to reduce the total cost ownership of the project using a whole building, life cycle approach. In accordance with the Engineering & Construction Bulletin 2008-1 and other directives, the facility and all site features shall be designed and constructed using USGBC-NC.

The minimum sustainable design rating level for the project is to achieve LEED-NC Silver. The USGBC LEED-NC credits and additional sustainable requirements in Part Three, 2.3.1 Sustainable Design are mandatory unless not applicable due to project scope. The design and construction shall incorporate sustainable design strategies and features to the fullest extent possible, consistent with mission, budget and client requirements. Ensure sustainable strategies and features in the design phase are incorporated in the construction phase.

Information and resources on sustainable design principles and guidelines are explained in the "Whole Building Design Guide" that can be found at www.wbdg.org [and in the Air Force Environmentally Responsible Facilities Guide, at www.afcee.brooks.af.mil/green .

1.9.3.1 LEED Green Building Rating System (GBRS) Submittals - USGBC Certification

Provide copies of the LEED Certification Registration Application and the complete LEED support documentation to the U.S. Green Building Council (USGBC) to obtain the minimum certificate level specified herein.

a. Provide the following information for the Basis of Design:

(1) A completed USGBC LEED-NC Project Checklist indicating all LEED Prerequisites and Credits to be implemented into the facility design and total LEED score for the project.

(2) Description of how each LEED Prerequisite and Credit will be achieved.

(3) List of Architects or Engineers from Contractor's Design Team and who on the team is responsible for implementing each LEED Prerequisite and Credit into the facility design.

(4) Identify the Design Team's USGBC LEED Accredited Professionals.

b. For the submission specified, provide the following:

(1) At 35% Design submittal, provide documentation of the USGBC LEED Certification Registration Application.

(2) At 100% Design submittal, provide a USGBC LEED –NC Project Checklist preliminary LEED documentation, in the form of a three-ring binder, of all LEED Prerequisites and Credits to be obtained as required by the USGBC LEED-NC Rating System.

(3) At final design submittal, update the USGBC LEED-NC Project Checklist and LEED documentation binder with any changes and include an electronic copy of the LEED documentation.

(4) Within thirty (30) days of Beneficial Occupancy Date, developed and submit the project case study for the U.S Department of Energy’s Federal Energy Management Program "High Performance Federal Buildings Database" (http://www.eere.energy.gov/femp/highperformance/).

(5) Within 60 days after the beneficial Occupancy Date (BOD), submit LEED Certification Registration Application and complete LEED Certification Documentation to USGBC for certification. After LEED certification is obtained, provide the plaque and 5 color copies of the LEED Certification to the Contracting Officer. Mat and frame the original LEED Certification document.

1.9.3.2 Sustainable Validation

Provide a design that incorporates sustainable techniques and materials to the greatest extent possible and to meet as many points applicable to the project and monetarily feasible. Provide an analysis of the USGBC LEED-NC criteria as it applies to the design of this project and include updated information with each design submittal.

a. Provide the following information for the Basis of Design:

(1) A completed USGBC LEED-NC Project Checklist indicating all LEED Prerequisites and Credits that are applicable to the project

and the total anticipated score.

(2) Description of how each applicable LEED Prerequisite and Credit and other sustainable features and strategies will be achieved.

(3) Identify the Design Team's [LEED Accredited Professional][sustainable team member] responsible for coordinating the sustainable requirements of the project.

b. For the submission specified, provide the following:

(1) At 100% Design submittal, provide a USGBC LEED-NC Project Checklist and preliminary LEED documentation, in the form of a three-ring binder, of all LEED Prerequisites and Credits to be obtained as required by the USGBC LEED-NC Rating System. Substitute forms other than those required by the USGBC are acceptable.

(2) At final design submittal, update the USGBC LEED-NC Project Checklist and the LEED documentation binder with any changes and include an electronic copy of the LEED documentation. The project [LEED Accredited Professional][Designer of Record] shall sign a statement validating that the LEED prerequisites and credits achieved by the project provide an accurate estimate of the rating the USGBC would assign to the project.

1.9.3.3 EPA Designated Products

Use products that meet or exceed the minimum requirements of this RFP and the EPA guideline standards for recovered content to the maximum practicable extent in the performance of the contract. See www.epa.gov/cpg/products.htm for a list of EPA designated products and a list of manufacturers and suppliers of EPA designated products.

1.9.4 Historic Preservation and Planning Commission Submission

Prepare the presentation materials required to obtain approval from the Historic Preservation and Planning Commissions having jurisdiction over the site location. The submission of the materials to the agencies will be accomplished by the Government. Consult with the NAVFAC Region Historic Preservation Officer and prepare a submittal in accordance with the 36 CFR 800.11, DOCUMENT STANDARDS. Consult with the Planner in the Base Development Department of NAVFAC Washington. The Planner will advise the contractor on the specific requirements and prospective timetable of the submission. The submission will address the National Capital Planning Commission (NCPC), the Commission of Fine Arts, and the State Historic Preservation Officer (SHPO) requirements. Refer to UFC 1-300-09N for specific submittal requirements. The Contractor is responsible for preparing the submittal package, presenting the project in public meeting, if called upon by the Government; and to modify the submittal and contract documents to incorporate the comments of the agencies having jurisdiction to obtain project approval.

1.9.5 Fall Protection Analysis

Eliminate fall hazards in the facility or if not feasible provide control measures to protect personnel conducting maintenance work after completion of the project. Identify fall hazards in the Basis of Design with the Design Development and Prefinal submittals. The analysis shall describe how fall hazards are considered, eliminated, prevented or controlled to prevent maintenance personnel from exposure to fall hazards while

performing work at heights. Refer to RFP Part 2, UFGS Section 01 35 26.05 20, *GOVERNMENT SAFETY REQUIREMENTS FOR DESIGN-BUILD* for fall hazard protection requirements.

1.9.6 Ergonomic Design Analysis

Facilities, processes, and job tasks shall be designed to reduce or eliminate work-related musculoskeletal (WMSD) injuries and risk factors in the workplace. Identify ergonomic design considerations in the basis of design with the Design Development and Prefinal submittals. The Basis of Design shall include a comprehensive ergonomic risk analysis of WMSD factors. Refer to RFP Part 2, UFGS Section 01 35 26.05 20, *GOVERNMENT SAFETY REQUIREMENTS FOR DESIGN-BUILD* for ergonomic protection requirements.

1.10 PROJECT RENDERING

Provide a full color rendering of the proposed facility by a company that regularly does this work as a major component of their normal business. Use the final rendering to produce the image for the signboard and the framed photographic copies provided to the Contracting Officer.

1.10.1 Final Framed Rendering and Copies

Provide the final rendering within 30 days of concept design approval. Provide the final original color rendering, [one][two] full size photographic reproduction(s) of the original rendering, and the photographic negative. Mount original and reproductions on acid free board, matted with metal frames, and utilizing non-glare glass. Print the project name, location, and Architect/Engineer/Contractor firm's name on the matting.

Ship the rendering, the photographic copies, and the negative in resilient packaging to ensure damage-free delivery. Deliver to:

Naval Facilities Engineering Command, Marianas

1.11 Facility Recognition Plaque

Provide a facility recognition plaque for this facility in accordance with UFC 1-300-09N, *Design Procedures*.

1.12 RECORD DOCUMENTS

1.12.1 Record Drawings

The as-built modifications shall be accomplished by electronic drafting methods on the Contractor-originated .DWG design drawings to create a complete set of record drawings. [In addition to the requirements of FAC 5252.236-9310, RECORD DRAWINGS, survey the horizontal and vertical location of all provided underground utilities to within 30 mm(0.1 feet) relative to the station datum. All pipe utilities shall be surveyed at each fitting and every 10 m(100 LF) of run length. Electrical and communication ductbank, direct buried conduit, and direct buried conductor shall be surveyed every 10 m(100 LF) and at each change of direction. Record locations and elevations on the Record Drawings.

a. For each record drawing, provide CADD drawing identical to signed Contractor-originated.PDF drawings, that incorporates modifications to the as-built conditions. In addition, copy initials and dates from the Contracting Officer approved .PDF documents to the title block of the record CADD.DWG drawings. The

RFP reference or definitive drawings are not required for inclusion in the record set of drawings.

b. After all as-built conditions are recorded on the CADD.DWG files, produce a PDF [and .TIF] file of each individual record drawing in conformance with UFC 1-300-09N. Electronic signatures are not required on record drawings.

1.12.2 Source Documents

Provide the specifications, design analysis, reports, surveys, calculations, and any other contracted documents on the CD-ROM disk with the record drawings.

1.12.3 NAVFAC Sustainable and Energy Data Record Card

Submit the NAVFAC Sustainable and Energy Data Record Card (NSEDRC) to document the energy usage and sustainable features of the facility. Follow the instructions provided and fill in the blank editable Adobe .PDF form available on the Whole Building Design Guide at the following web address: http://www.wbdg.org/references/pa_dod_sust_contract.php . Prepare the following submissions;

a. Draft submission. As a part of the Final Design submission the DOR shall complete the NSEDRC and include it as part of the Design Analysis and submit to the Contracting Officer for approval.

b. Final Submission. The Contractor and Designer of Record shall complete the electronic file documenting the NSEDRC with final data and provide the Final Submission 60 days prior to the Beneficial Occupancy Date (BOD) of the facility. The Final submission shall update the Draft submission information and submit to the Contracting Officer for approval.

1.12.4 DD Form 1354

Prepare a Draft and Interim DD Form 1354, TRANSFER AND ACCEPTANCE OF MILITARY REAL PROPERTY, in accordance with UFC 1-300-08, available at http://www.wbdg.org/ccb/DOD/UFC/ufc_1_300_08.pdf . All assets must be broken out by construction categories that are found in the DD Form 1391 and the "Category Codes for Military Real Property" from NAVFAC P-72. Use Navy specific Facility Catcodes from the NAVFAC P-72, which are available from the Contracting Officer. Coordinate the identification of appropriate asset construction categories with the Contracting Officer and the Real Property Accounting Officer.

a. Draft DD Form 1354. DOR shall determine applicable real property assets broken out by construction categories and submit a "Draft DD Form 1354" for Government approval as a part of the Design Analysis included with the Prefinal Design submittal. "Draft DD Form 1354" must include all quantities and units of measure, but does not require cost breakdown. Download the current blank editable DD Form 1354 in ADOBE (PDF) from the following web site:
http://www.dtic.mil/whs/directives/infomgt/forms/eforms/dd1354.pdf

b. Interim DD Form 1354. Contractor shall coordinate with the DOR and update the Draft DD Form 1354 submission to include any additional assets, improvements, or alterations that occurred during construction. Use the Draft DD Form 1354 and the UFGS Section 01 20 00.05 20, Price and Payment Procedures to identify costs. Submit Interim DD Form 1354 to the

Government for approval 60 days prior to the Beneficial Occupancy Date (BOD). If modifications to the Interim DD Form 1354 are required by the Government, the corrected version must be submitted prior to the BOD.

Submit the completed Checklist for Form DD1354 of Government-Furnished and Contractor-Furnished/Contractor Installed items. Attach this list to the Interim DD Form 1354. Instructions for completing the form and a blank checklist may be obtained at the following web site: http://www.wbdg.org/ccb/DOD/UFC/ufc_1_300_08.pdf]

Coordinate with Section 01 20 00.05 20, Price and Payment Procedures for construction categories and associated category codes. The Contractor's Schedule of Prices shall allocate the total cost of construction to the appropriate category codes.

When documenting demolition work, the DD Form 1354 shall list the quantitative data associated with this work as a negative value to show the cost should be deleted from the Navy asset data store. Coordinate with the Installation Real Property POC to assist in determining the negative value for demolition work.

PART 2 PRODUCTS

2.1 CONSOLIDATED RFP DOCUMENTS

Within four weeks after contract award, provide three electronic and hard copies of consolidated RFP documents incorporating the Contractor's Proposal and all RFP amendments and revisions that are contained in the contract award. Identify the changes to the RFP with the "Red-lining" or "Track Changes" feature of SpecsIntact or MS Word to highlight the pre-award modifications to the contract. Identify the amendment source at each addition and deletion by annotation, such as footnote or reference in parenthesis.

2.2 DESIGN SUBMITTALS

Complete the Contractor-originated design submittals as defined by this contract, and coordinate with the approved design network analysis schedule.

2.2.1 Design Submittal Packages

The Government prefers to review for Quality Assurance (QA) as few submittal packages as possible. Site and Building Design Submittal Packages are required, however Critical Path Design Submittals are acceptable if they are substantiated as having an impact to the critical path in the Government approved Network Analysis Schedule. A Critical Path submittal shall include all design analyses, drawings, specifications and product data required to fully describe the project element for Government review.

Examples of project elements that may be submitted as Critical Path Design Submittal Packages are: Master Plan Design, Demolition Design, Foundation Design, Structural Design, Building Enclosure Design, Remaining Work Design, Furniture/Equipment Design, long lead items, or any other construction activity or project element that can be organized into a submittal package that can be reviewed and approved by the Government without being contingent upon subsequent design submittals.

2.2.1.1 Site Design

The Site Design typically includes the following components:

[a. Master Site Plan]

[b. Demolition]

c. Site work [including Environmental]

d. Geotechnical

2.2.1.2 Building Design

The Building Design typically includes the following components:

a. Foundation

b. Structural

c. Building Enclosures

d. Remaining Work

e. Furniture/Equipment

2.2.2 Required Design Submittals

Provide the following Design Submittal packages. Provide comprehensive, multi-discipline design packages that include design documentation for project elements, fully developed to the design stage indicated, and in accordance with UFC 1-300-09N, except where specified otherwise.

a. Concept Design presented at Concept Design Workshop

b. Design Development in-progress, over the shoulder review, - Government Progress QA. 14 calendar day Government review time.

c. Prefinal (100%) Design - Government Progress QA. 14 calendar day Government review time.

d. Final Design - Government QA. 14 calendar day Government review time for submittals requiring Government approval prior to construction.

2.2.3 Critical Path Design Submittals

Provide Critical Path Design Submittals that include design documents for the project elements involved. Include and provide full documentation that would normally have been provided in earlier submittal stages, such as Design Development Phase.

a. 100 percent (Prefinal) Design - Government Progress QA. 14 calendar day Government review time.

b. Final Design - Government QA. 14 calendar day Government review time for submittals requiring Government approval prior to construction.

2.2.4 Review Copies of Design Submittal Packages

a. Provide copies of each design submittal package for review to the following reviewers. Addresses for mailing will be furnished at the PAK meeting.

(1) 8 paper copies to the NAVFAC component and 1 electronic copies of the Final submittals.

(2) 2 paper copies to the Activity claimant.

(3) 8 paper copies to the Activity Public Works Officer (PWO) and 1 electronic copies of the Final submittals.

b. Provide the same quantities of copies for resubmittals, as required for each design submittal.

2.2.5 Distribution of Approved Final Design Drawings and Specification to Government Representatives

Submit within 14 calendar days of receiving the Government Approved Final Design Documents, which includes any Critical Path Final Design Document Packages, electronic and hardcopy(s) of these final documents to Government representatives for use during the construction of the project. If Critical Path Submittal Packages are used, provide coversheets and index to identify each sheet and how this Critical Path Submittal Package fits into the overall project. Provide the number and type of copies of the final design documents to the following Government representative:

a. Two electronic and two hard copy(s) to the Project Manager (name, address, and phone number)

b. Two electronic and two hard] copy(s) to the Design Manager

c. One electronic and one hard copy(s) to the Construction Manager

d. One electronic and one hard copy(s) to the Contracting Officer

e. One electronic and one hard] copy(s) to the Public Works Officer

2.3 IDENTIFICATION OF DESIGN SUBMITTALS

Provide a title sheet to clearly identify each submittal, the completion status, and the date. The title sheet shall use the standard format indicated in the UFC 1-300-09N for title sheets. The title sheet shall be unique to a particular design submittal. Submit the project title sheet with design status and date for the design submittals.

2.3.1 Critical Path Submittal Title Sheet

Identify Critical Path submittals as such, and include a title sheet indicating the type of critical path submittal, the status, and the date.

PART 3 EXECUTION

3.1 CONTRACTOR'S RESOLUTION OF COMMENTS

Provide written responses to all written comments by the Government. Resubmittal of an unacceptable design submittal shall be a complete package that includes all the required, specified components of that design submittal. When required by the Government, Contractor resubmittal of

design package, due to nonconformance to the contract, is not a delay in the contract.

3.2 VARIATIONS

Variations from contract requirements require Government approval and will be considered where advantageous to the Government. The Designer of Record must approve any proposed variation prior to submittal to the Government.

3.3 THE CONTRACT AND ORDER OF PRECEDENCE

3.3.1 Contract Components

The contract consists of the solicitation, the approved proposal, and the final design.

3.3.2 Order of Precedence

NFAS Clause 5252.236-9312. In the event of conflict or inconsistency between any of the below described portions of the conformed contract, precedence shall be given in the following order:

a. Any portions of the proposal or final design that exceed the requirements of the solicitation.

(1) Any portion of the proposal that exceeds the final design.

(2) Any portion of the final design that exceeds the proposal.

(3) Where portions within either the proposal or the final design conflict, the portion that most exceeds the requirements of the solicitation has precedence.

b. The requirements of the solicitation, in descending order of precedence:

(1) Standard Form 1442, Price Schedule, and Davis Bacon Wage Rates.

(2) Part 1 - Contract Clauses.

(3) Part 2 - General Requirements.

(4) Part 3 - Project Program Requirements.

(5) Part 6 - Attachments (excluding Concept Drawings).

(6) Part 5 - Prescriptive Specifications exclusive of performance specifications.

(7) Part 4 - Performance Specifications exclusive of prescriptive specifications.

(8) Part 6 - Attachments (Concept Drawings).

3.3.2.1 Government Review or Approval

Government review or approval of any portion of the proposal or final design shall not relieve the Contractor from responsibility for errors or omissions with respect thereto.

-- End of Section --

SECTION 01 35 26.05 20

GOVERNMENT SAFETY REQUIREMENTS FOR DESIGN-BUILD
06/10

PART 1 GENERAL

1.1 REFERENCES

The publications listed below form a part of this specification to the extent referenced. The publications are referred to within the text by the basic designation only.

AMERICAN NATIONAL STANDARDS INSTITUTE (ANSI)

ANSI/HFES 100	(2007) Human Factors Engineering of Computer Workstations
ANSI A10.32	(2004) Fall Protection systems for Construction and Demolition Operations
ANSI/ASSE A1264.1	(2007) Safety Requirements for Workplace Walking/Working Surfaces and Their Access; Workplace Floor and Wall Openings; Stairs and Guardrails Systems
ANSI/ASSE Z359.0	(2007) Definitions and Nomenclature Used for Fall Protection and Fall Arrest
ANSI/ASSE Z359.1	(2007) Safety Requirements for Personal Fall Arrest System, Subsystems and Components
ANSI/ASSE Z359.2	(2007) Minimum Requirements for a Comprehensive Managed Fall Protection Program
ANSI/ASSE Z359.3	(2007) Safety Requirements for Positioning and Travel Restraint Systems
ANSI/ASSE Z359.4	(2007) Safety Requirements for Assisted-Rescue and Self-Rescue Systems, Subsystems and Components

ASME INTERNATIONAL (ASME)

ASME B30.3	(2009) Construction Tower Cranes
ASME B30.5	(2004) Mobile and Locomotive Cranes
ASME B30.8	(2004) Floating Cranes and Floating Derricks

ASME B30.22	(2005) Articulating Boom Cranes

ASTM INTERNATIONAL (ASTM)

ASTM F855	(2004) Standard Specifications for Temporary Protective Grounds to be used on De-energized Electrical Power Lines and Equipment

INSTITUTE OF ELECTRICAL AND ELECTRONICS ENGINEERS (IEEE)

IEEE 1048	(2003) Guide for Protective Grounding of Power Lines

DEPARTMENT OF DEFENSE (DoD)

MIL-STD-1472F	(1999) Military Standard, Human Engineering Design Criteria for Military Systems, Equipment and Facilities
DoD-HDBK 743A	(1991) Anthropometry of US Military Personnel

NATIONAL FIRE PROTECTION ASSOCIATION (NFPA)

NFPA 241	(2009) Standard for Safeguarding Construction, Alteration, and Demolition Operations
NFPA 51B	(2009) Standard for Fire Prevention During Welding, Cutting, and Other Hot Work
NFPA 70	(2008) National Electrical Code
NFPA 70E	(2009) Standard for Electrical Safety in the Workplace

U.S. ARMY CORPS OF ENGINEERS (USACE)

EM 385-1-1	(2008) Safety -- Safety and Health Requirements or latest edition including changes

U.S. NATIONAL ARCHIVES AND RECORDS ADMINISTRATION (NARA)

29 CFR 1910.	Occupational Safety and Health Standards
29 CFR 1910.146	Permit-required Confined Spaces
29 CFR 1915	Occupational Safety and Health Standards for Shipyard Employment
29 CFR 1926	Safety and Health Regulations for Construction
29 CFR 1926 Subpart M	Fall Protection

1.2 SUBMITTALS

The use of a "G" following a submittal indicates that a Government approval action is required. Submit the following in accordance with Section 01 33 10.05 20 DESIGN SUBMITTAL PROCEDURES and Section 01 33 00.05 20 CONSTRUCTION SUBMITTAL PROCEDURES.

SD-01 Preconstruction Submittals

Accident Prevention Plan; G

Activity Hazard Analysis; G

Crane Critical Lift Plan; G

Proof of Qualifications foe Crane Operators; G

SD-06 Test Reports

Reports

Accident/ Incident Reports

Monthly Work-Hour Exposure Reports

Submit reports as their incidence occurs, in accordance with the requirements of paragraph, REPORTS.

SD-07 Certificates

Contractor Safety Self-Evaluation Checklist; G (Obtain copy from Contracting Officer)

Submit one copy of each permit/certificate attached to each Daily Production Report.

Weight Handling Equipment Certificate of Compliance; G (Obtain copy from Contracting Officer)

1.3 CONTRACTOR SAFETY SELF-EVALUATION CHECKLIST

Contracting Officer will provide a "Contractor Safety Self-Evaluation checklist" to the Contractor at the Pre-work conference. The checklist will be completed monthly by the Contractor and submitted with each request for payment voucher. Additionally, monthly exposure reporting to the Contracting Officer is required to be attached to the monthly billing request. This report is a compilation of employee-hours worked each month for all site workers, both prime and subcontractor. The Contracting Officer will provide copies of any special forms. An acceptable score of 90 or greater is required for the self evaluation checklist. Failure to submit the completed safety self-evaluation checklist or achieve a score of at least 90, will result in retention of up to 10 percent of the voucher. The completed checklist in total or selected sections will be reviewed and validation at the site by the Contracting Officer's Representative.

1.4 REGULATORY REQUIREMENTS

In addition to the detailed requirements included in the provisions of this contract, work performed shall comply with USACE EM 385-1-1, and the following federal, state, and local laws, ordinances, criteria, rules and regulations. Submit matters of interpretation of standards to the appropriate administrative agency for resolution before starting work. Where the requirements of this specification, applicable laws, criteria, ordinances, regulations, and referenced documents vary, the most stringent requirements shall apply.

1.5 SITE QUALIFICATIONS, DUTIES, PLAN, AND MEETINGS

1.5.1 Personnel Qualifications

1.5.1.1 Site Safety and Health Officer (SSHO)

The contractor shall provide a safety oversight team that includes a minimum of one (1) Competent Person at each project site to function as the Safety and Health Officer (SSHO). The SSHO shall be at the work site at all times, unless specified differently in the contract, to perform safety and occupational health management, surveillance, inspections, and safety enforcement for the Contractor, and their training, experience, and qualifications shall be as required by EM 385-1-1 paragraph 01.A.17 and all associated sub-paragraphs. To meet the EM 385-1-1 annual training requirements the SSHO may elect to accomplish applicable sections (lessons) of the web based EM 385-1-1 training. For purposes of this contract completion of each EM 385-1-1 training module (lesson) verified by the printed certificate is considered credit for four hours of training. The training may be accessed at the following link: http://63.88.8.194/construction/index.html A Competent Personal shall be provided for all of the hazards identified in the Contractor's Safety and Health Program in accordance with the accepted Accident Prevention Plan, and shall be on-site at all times when the work that presents the hazards associated with their professional expertise is being performed. The credentials of the Competent Persons(s) shall be approved by the Contracting Officer in consultation with the Safety Office. Site Safety and Health Officer (SSHO) shall perform safety and occupational health management, surveillance, inspections, and safety enforcement for the Contractor. The assignment of the SSHO contractually does not relieve the Contractor from the regulatory requirements governing safety responsibility.

1.5.1.2 Crane Operators

Meet the crane operator's requirements in USACE EM 385-1-1. In addition, for mobile cranes with Original Equipment Manufacturer (OEM) rated

capacitates of 50,000 pounds or greater, designate crane operators as qualified by a source that qualifies crane operators(i.e., union, a government agency, or and organization that tests and qualifies crane operators). Provide proof of current qualification.

Crane operators shall also meet the requirements of the State of Hawaii for Crane certification.

1.5.1.3 Competent Person for Confined Space Entry

Provide a competent person for confined space meeting the definition and requirements of EM 385-1-1. If work involves marine operations that handle combustible or hazardous materials, this person shall have the ability to understand and follow through on the air sampling, PPE, and instructions of a Marine Chemist, Coast Guard authorized persons, or Certified Industrial Hygienist. All confined and enclosed space work shall comply with NFPA 306, OSHA 29 CFR 1915, Subpart B, "Confined and Enclosed Spaces and Other Dangerous Atmospheres in Shipyard Employment" or as applicable, 1910.147 for general industry.

1.5.2 Personnel Duties

1.5.2.1 Site Safety and Health Officer (SSHO)

Collect and maintain certified EMR ratings and DART rates for all subcontractors on the project and make them available to the Government at the Government's request.

In addition to duties required in EM 385-1-1, perform the following duties:

a. Conduct daily safety and health inspections and maintain a written deficiency tracking log which includes area/operation inspected, date of inspection, identified hazards, recommended corrective actions, estimated and actual dates of corrections. Safety inspection logs shall be attached to the Contractors' daily production report and posted at the jobsite.

b. Shall have no other duties other than safety and occupational health management, inspections, enforcement, on this contract.

c. Attend the Rework meeting, Pre-work meetings including preparatory inspection meeting, and periodic in-progress meetings.

d. Maintain applicable safety reference material on the job site.

e. Attend the Pre-work conference.

f. Implement and enforce accepted APP and AHAs.

g. Maintain a safety and health deficiency tracking system that monitors outstanding deficiencies until resolution. Post a list safety and health deficiencies on the safety bulletin board.

h. Ensure sub-contractor compliance with safety and health requirements.

i. Maintain a list of hazardous chemicals on site and their material safety data sheets. Failure to actively apply an acceptable safety program outlined in the above duties will result in dismissal of the superintendent and/or SSHO, and a project work stoppage. The project work stoppage will remain in effect pending approval of suitable replacements.

j. Conduct mishap investigations and complete required reports. Maintain OSHA Form 300 and document safety oversight work in the Daily Production reports for prime and sub-contractors.

k. Conduct mishap investigations and complete required reports. Maintain the one OSHA Form 300 "Log of Work-Related Injuries and Illnesses" and one OSHA Form 300A "Summary of Work-Related Injuries and Illnesses" and document safety oversight work in the Daily Production Reports for prime and all subcontractors. Update OSHA Form 300A on a monthly basis and post it at the Contractor's construction trailer throughout the construction period. Submit final OSHA Form 300A along with OSHA Form "Calculating Injury and Illness Incidence Rates," which includes the Total Recordable Cases Incidence Rate and DART Incidence Rate, at project closeout.

l. Collect and maintain certified EMR ratings and DART rates for all subcontractors on the project and make them available to the Government at the Government's request.

m. Maintain Daily Production Reports for prime and subcontractors]]

1.5.3 Safety Plans and Submissions

1.5.3.1 Accident Prevention Plan (APP)

Use a qualified person to prepare the written site-specific APP. Prepare the APP in accordance with the format and requirements of USACE EM 385-1-1 and as supplemented herein. Cover all paragraph and subparagraph elements in USACE EM 385-1-1, Appendix A, "Minimum Basic Outline for Accident Prevention Plan". The APP shall be job-specific and address any unusual or unique aspects of the project or activity for which it is written. The APP shall interface with the Contractor's overall safety and health program. Include any portions of the Contractor's overall safety and health program referenced in the APP in the applicable APP element and made site-specific. The Government considers the Prime Contractor to be the "controlling authority" for all work site safety and health of the subcontractors. Contractors are responsible for informing their subcontractors of the safety provisions under the terms of the contract and the penalties for noncompliance, coordinating the work to prevent one craft from interfering with or creating hazardous working conditions for other crafts, and inspecting subcontractor operations to ensure that accident prevention responsibilities are being carried out. The APP shall be signed by the person and firm (senior person) preparing the APP, the Contractor, the on-site superintendent, the designated site safety and health officer, the Contractor Quality control Manager, and any designated CSP and/or CIH. Submit the APP to the Contracting Officer 15 calendar days prior to the date of the Pre-work conference for acceptance. Work cannot proceed without an accepted APP. Once accepted by the Contracting Officer, the APP and attachments will be enforced as part of the contract. Disregarding the provisions of this contract or the accepted APP will be cause for stopping of work, at the discretion of the Contracting Officer, until the matter has been rectified. Once work begins, changes to the accepted APP shall be made with the knowledge and concurrence of the Contracting Officer, project superintendent, SSHO and quality control manager. Should any severe hazard exposure, i.e. imminent danger, become evident, stop work in the area, secure the area, and develop a plan to remove the exposure and control the hazard. Notify the Contracting Officer within 24 hours of discovery. Eliminate/remove the hazard. In the interim, take all necessary action to restore and maintain safe working conditions in order to safeguard onsite personnel, visitors, the public (as defined by ASSE/SAFE A10.34,) and the environment. Copies of the accepted plan will be maintained at the job

site. Continuously review and amend the APP, as necessary, throughout the life of the contract. Incorporate unusual or high-hazard activities not identified in the original APP as they are discovered.

In addition to the requirements outlined in USACE EM 385-1-1, the following is required:

a. Names and qualifications (resumes including education, training, experience and certifications) of all site safety and health personnel designated to perform work on this project to include the designated site safety and health officer and other competent and qualified personnel to be used such as CSPs, CIHs, STSs, CHSTs. Specify the duties of each position.

b. Qualifications of competent and of qualified persons. As a minimum, designate and submit qualifications of competent persons for each of the following major areas: excavation; scaffolding; fall protection; hazardous energy; confined space; health hazard recognition, evaluation and control of chemical, physical and biological agents; personal protective equipment and clothing to include selection, use and maintenance.

c. Confined Space Entry Plan. Develop a confined and/or enclosed space entry plan in accordance with USACE EM 385-1-1, applicable OSHA standards 29 CFR 1910, 29 CFR 1915, and 29 CFR 1926, OSHA Directive 2.100, and any other federal, state and local regulatory requirements identified in this contract. Identify the qualified person's name and qualifications, training, and experience. Delineate the qualified person's authority to direct work stoppage in the event of hazardous conditions. Include procedure for rescue by contractor personnel and the coordination with emergency responders. (If there is no confined space work, include a statement that no confined space work exists and none will be created.)

d. Fall Hazard Protection Program. Establish a fall protection and prevention program,for the protection of all employees exposed to fall hazards. Within the program include company policy, identify responsibilities, education and training requirements, fall hazard identification, prevention and control measures, inspection, storage, care and maintenance of fall protection equipment and rescue and evacuation procedures in accordance with 29 CFR 1926 Subpart M;ANSI/ASSE Z359.0, ANSI/ASSE Z359.1, ANSI/ASSE Z359.2, ANSI/ASSE Z359.3, ANSI/ASSE Z359.4; and ANSI A10.32.

e. Control of Hazardous Energy. Contractor shall ensure that a comprehensive program is in place for all anticipated sources of energy.

f. Weight Handling Equipment Certificate of Compliance. Provide a Certificate of Compliance for each crane when entering an activity under this contract (see Contracting Officer for a blank certificate). State within the certificate that the crane and rigging gear meet applicable OSHA regulations (with the Contractor citing which OSHA regulations are applicable, e.g., cranes used in construction demolition, or maintenance comply with 29 CFR 1926 and USACE EM 385-1-1. Certify on the Certificate of Compliance that the crane operator(s) is qualified and trained in the operation of the crane to be used. For cranes at DOD activities in foreign countries, certify that the crane and rigging gear conform to the appropriate host country safety standards. Also certify that all of its crane operators working on the DOD activity have been trained in the proper use of all safety devices (e.g., anti-

two block devices). Post certifications on the crane.

g. Crane Critical Lift Plan. Prepare and sign weight handling critical lift plans for lifts over 75 percent of the capacity of the crane or hoist (or lifts over 50 percent of the capacity of a barge mounted mobile crane's hoists) at any radius of lift; lifts involving more than one crane or hoist; lifts of personnel; and lifts involving non-routine rigging or operation, sensitive equipment, or unusual safety risks. Submit 15 calendar days prior to on-site work and include the requirements of USACE EM 385-1-1, and the following:

(1) For lifts of personnel, demonstrate compliance with the requirements of 29 CFR 1926.550(g).

(2) For barge mounted mobile cranes, barge stability calculations identifying barge list and trim based on anticipated loading; and load charts based on calculated list and trim. The amount of list and trim shall be within the crane manufacturer's requirements. Third Party Certification of Barge-Mounted Mobile Cranes Certify barge-mounted mobile cranes in accordance with 29 CFR 1919 by an OSHA accredited person.

1.5.3.2 Activity Hazard Analysis (AHA)

The Activity Hazard Analysis (AHA) format shall be in accordance with USACE EM 385-1-1 and as provided by the Contracting Officer at the pre work meeting. Submit the AHA for review at least 15 calendar days prior to the start of each phase. Format subsequent AHAs as amendments to the APP. The analysis should be used during daily inspections to ensure the implementation and effectiveness of the activity's safety and health controls and reviewed with all employees involved in the work. The AHA list will be reviewed periodically (at least monthly) at the Contractor supervisory safety meeting and updated as necessary when procedures, scheduling, or hazards change. Develop the activity hazard analyses using the project schedule as the basis for the activities performed. Any activities listed on the project schedule will require an AHA. Competent persons required for phases involving such things as fall protection, excavations, scaffold, and electrical work shall be identified. AHAs should be developed by the contractor, supplier, or subcontractor performing the work and provided to the prime contractor for review and submitted to the Contracting Officer for acceptance after prime contractor approval.

1.5.3.3 Pre-Design Submittals

Prior to start of design, provide the following submittals based on the requirements of the U.S. Army Corps of Engineers Safety & Health Manual EM 385-1-1, using the latest version. Provide a description of the safety controls for design investigations and field work. No field work allowed until submittals are accepted by the Contracting Officer.

1.5.4 Meetings

1.5.4.1 Pre-work Conference

a. Contractor representatives who have a responsibility or significant role in accident prevention on the project shall attend the Pre-work conference. This includes the project superintendent, site safety and health officer (SSHO), quality control supervisor, or any other assigned safety and health professionals who participated in the development of the APP (including the Activity Hazard Analyses (AHAs) and special plans,

programs, and procedures associated with it).

b. Discuss the details of the submitted APP to include incorporated plans, programs, procedures and a listing of anticipated AHAs that will be developed and implemented during the performance of the contract. This list of proposed AHAs will be reviewed at the conference and an agreement will be reached between the Contractor and the Contracting Officer's representative as to which phases will require an analysis. At a minimum all definable features of work are to have an AHA developed. In addition, establish a schedule for the preparation, submittal, review, and acceptance of AHAs to preclude project delays.

c. Deficiencies in the submitted APP will be brought to the attention of the Contractor and the Contractor shall revise the plan to correct deficiencies and re-submit for acceptance. Do not begin work until there is an accepted APP. A returned APP should be corrected prior to scheduling the Pre-work meeting.

d. The functions of a Pre-work conference may take place at the Design Build Post-Award Kickoff meeting.

1.5.4.2 Safety Meetings for Employees

Conduct and document meetings as required by EM 385-1-1. Attach minutes showing contract title, signatures of attendees and a list of topics discussed to the Contractors' daily production report.

1.6 REPORTS

1.6.1 Accident Reports

a. Accident Initial Notification: Notify the Contracting Officer as soon as practical, but not later than four hours, after any accident meeting the definition of Recordable Injuries or Illnesses, high visibility accidents, property damage equal to or greater than $2,000, near miss, or any weight handling equipment accident. Information shall include contractor name; contract title; type of contract; name of activity, installation or location where accident occurred; date and time of accident; names of personnel injured, if applicable; extent of property damage, if any; extent of injury, if known, and brief description of accident (to include type of equipment used, PPE used, etc.). Preserve the conditions and evidence on the accident site until the Government investigation team arrives on-site and Government investigation is conducted.

b. Investigation Reporting: For recordable injuries and illnesses, property damage accidents resulting in at least $2,000 in damages, and near miss accidents the Prime Contractor shall conduct an accident investigation to establish the root cause (s) and complete the Navy Contractor Significant Incident Report (CSIR) form and provide the report to the Contracting Officer within 5 calendar day(s) of the accident. The Contracting Officer will provide copies of any other required or special forms. Contractor will report and investigate any near miss accidents that could have resulted in serious employee injury or property damage. Near miss accident investigations are viewed as highly desirable and a positive indicator of commitment towards assuring a safe work place for employees on the site from which prevention lessons learned can be disseminated to other employees.

c. Weight Handling Equipment (WHE): For any weight handling equipment accident (including rigging gear accidents) the Prime Contractor shall conduct an accident investigation to establish the root cause(s) of the accident, complete the WHE Accident Report (Crane and Rigging Gear) form and provide the report to the Contracting Officer within 5 calendar days of the accident. Crane operations shall not proceed until cause is determined and corrective actions have been implemented to the satisfaction of the contracting officer. The Contracting Officer will provide a blank copy of the accident report form. A WHE accident occurs when any one or more of the six elements in the operating envelope fails to perform correctly during operation, including operation during maintenance or testing resulting in personnel injury or death; material or equipment damage; dropped load; derailment; two-blocking; overload; and/or collision, including unplanned contact between the load, crane, and/or other objects. A dropped load, derailment, two-blocking, overload and collision are considered accidents even though no material damage or injury occur. A component failure (e.g., motor burnout, gear tooth failure, bearing failure) is not considered an accident solely due to material or equipment damage unless the component failure results in damage to other components (e.g., dropped boom, dropped load, roll over, etc.).

d. Monthly Work-Hour Exposure Reports: Monthly work-hour reporting to the Contracting Officer is required to be attached to the monthly billing request. This report is a compilation of employee-hours worked each month for all site workers, both prime and subcontractor. The Contracting Officer will provide copies of any special forms.

1.7 HOT WORK

Prior to performing "Hot Work" (welding, cutting, etc.) or operating other flame-producing/spark producing devices, a written permit shall be requested from the Fire Department. CONTRACTORS ARE REQUIRED TO MEET ALL CRITERIA BEFORE A PERMIT IS ISSUED. It is mandatory to have a designated FIRE WATCH for any "Hot Work" done at this activity. The Fire Watch shall be trained in accordance with NFPA 51B and remain on-site for a minimum of 30 minutes after completion of the task or as specified on the hot work permit.

Obtain services from a NFPA Certified Marine Chemist for "HOT WORK" within or around flammable materials (such as fuel systems, welding/cutting on fuel pipes) or confined spaces (such as sewer wet wells, manholes, vaults, etc.) that have the potential for flammable or explosive atmospheres.

PART 2 PRODUCTS

2.1 CONFINED SPACE SIGNAGE

The Contractor shall provide permanent signs integral to or securely attached to access covers for permit-required confined spaces provided by this contract. Signs wording: "DANGER--PERMIT-REQUIRED CONFINED SPACE - DO NOT ENTER -" in bold letters a minimum of 25 mm (one inch) in height and constructed to be clearly legible with all paint removed. The signal word "DANGER" shall be red and readable from 1.52 m (5 feet).

PART 3 EXECUTION

3.1 REGULATIONS

The Contractor shall comply with USACE EM 385-1-1, NFPA 241, the APP, the AHA, Federal and/or State OSHA regulations, and other related submittals and activity fire and safety regulations. The most stringent standard shall prevail.

3.1.1 Hazardous Material Use

Each hazardous material must receive approval prior to being brought onto the job site or prior to any other use in connection with this contract. Allow a minimum of 10 working days for processing of the request for use of a hazardous material.

3.1.2 Hazardous Material Exclusions

Notwithstanding any other hazardous material used in this contract, radioactive materials or instruments capable of producing ionizing/non-ionizing radiation (with the exception of radioactive material and devices used in accordance with USACE EM 385-1-1 such as nuclear density meters for compaction testing and laboratory equipment with radioactive sources) as well as materials which contain asbestos, mercury or polychlorinated biphenyls, di-isocynates, lead-based paint are prohibited. The Contracting Officer, upon written request by the Contractor, may consider exceptions to the use of any of the above excluded materials.

3.1.3 Unforeseen Hazardous Material

The design should have identified materials such as PCB, lead paint, and friable and non-friable asbestos. If additional material, not indicated, that may be hazardous to human health upon disturbance during operations is encountered, stop that portion of work and notify the Contracting Officer immediately. Within 14 calendar days the Government will validate if the material is hazardous. If material is not hazardous or poses no danger, the Government will direct the Contractor to proceed without change. If material is hazardous and handling of the material is necessary to accomplish the work, the Government will issue a modification pursuant to "FAR 52.243-4, Changes" and "FAR 52.236-2, Differing Site Conditions."

3.2 PRE-OUTAGE COORDINATION MEETING

Contractors are required to apply for utility outages at least 15 days in advance. As a minimum, the request should include the location of the outage, utilities being affected, duration of outage, and any necessary sketches. Special requirements for electrical outage requests are contained elsewhere in this specification section. Once approved, and prior to beginning work on the utility system requiring shut down, the Contractor shall attend a pre-outage coordination meeting with the Contracting Officer to review the scope of work and the lock-out/tag-out procedures for worker protection. No work will be performed on energized electrical circuits unless proof is provided that no other means exist. For electrical work positive cable/circuit identification must be made prior to submitting any outage request. Arrangements are to be coordinated with the Contracting Officer and Station Utilities for identification. The Contracting Officer will not accept an outage request until the Contractor satisfactorily documents that the circuits have been clearly identified. Following the application of lockout/tag out devices to all hazardous energy sources, applicable AHA should outline equipment restart methods to ensure "zero energy" state has been accomplished.

3.3 FALL PROTECTION

3.3.1 Roofing Work

Implement fall protection controls based on the type of roof being constructed and work being performed. Evaluate the roof area to be accessed for its structural integrity including weight-bearing capabilities for the projected loading.

a. Low Sloped Roofs:

(1) For work within 1.8 m 6 feet of an edge, on low-slope roofs, Protect personnel from falling by use of personal fall arrest systems, guardrails, or safety nets. A safety monitoring system used by itself as the only form of fall protection system is not adequate fall protection and is not authorized.

(2) For work greater than 1.8 m 6 feet from an edge, erect and install warning lines in accordance with 29 CFR 1926.500 and USACE EM 385-1-1.

b. Steep-Sloped Roofs: Work on steep-sloped roofs requires a personal fall arrest system, guardrails with toe-boards, or safety nets. This requirement also includes residential or housing type construction, repair, or maintenance.

3.3.2 Existing Anchorage

Certified (or re-certified) by a qualified person for fall protection existing anchorages, to be used for attachment of personal fall arrest equipment is required in accordance with ASSE/SAFE Z359.1. Exiting horizontal lifeline anchorages must be certified (or re-certified) by a registered professional engineer with experience in designing horizontal lifeline systems.

3.3.3 Horizontal Lifelines

Design, install, certify and use under the supervision of a qualified person horizontal lifelines for fall protection as part of a complete fall arrest system which maintains a safety factor of 2 (29 CFR 1926.500).

3.3.4 Guardrails and Safety Nets

Design, install and use guardrails and safety nets in accordance with EM 385-1-1 and 29 CFR 1926 Subpart M.

3.3.5 Rescue and Evacuation Procedures

When personal fall arrest systems are used, the contractor must ensure the mishap victim can self-rescue or can be rescued promptly should a fall occur. Prepare a Rescue and Evacuation Plan and include a detailed discussion of the following: methods of rescue; methods of self-rescue; equipment used; training requirement; specialized training for the rescuers; procedures for requesting rescue and medical assistance; and transportation routes to a medical facility. Include the Rescue and Evacuation Plan within the Activity Hazard Analysis (AHA) for the phase of work, in the Fall Protection and Prevention (FP&P) Plan, and the Accident Prevention Plan (APP).

3.3.6 Scaffold

Provide employees with a safe means of access to scaffold platforms. Climbing of any scaffold braces or supports not specifically designed for access is prohibited. Access scaffold platforms greater than 6 m 20 feet maximum in height by use of a scaffold stair system. Do not use vertical

ladders commonly provided by scaffold system manufacturers for accessing scaffold platforms greater than 6 m 20 feet maximum in height. The use of an adequate gate is required. Ensure that employees are qualified to perform scaffold erection and dismantling. Do not use scaffold without the capability of supporting at least four times the maximum intended load or without appropriate fall protection as delineated in the accepted fall protection and prevention plan. Stationary scaffolds must be attached to structural building components to safeguard against tipping forward or backward. Give special care to ensure scaffold systems are not overloaded. Side brackets used to extend scaffold platforms on self-supported scaffold systems for the storage of material are prohibited. The first tie-in shall be at a minimum at the height equal to 4 times the width of the smallest dimension of the scaffold base. Place work platforms on mud sills. Scaffold or work platform erectors shall have fall protection during the erection and dismantling of scaffolding or work platforms that are more than six feet. Delineate fall protection requirements when working above six feet or above dangerous operations in the Fall Protection Program and Prevention (FP&P) Plan and Activity Hazard Analysis (AHA) for the phase of work.

3.3.7 Fall Prevention during Design Phase

During design phase the Contractor shall consider and eliminate fall hazards encountered at the [facility, building, crane, structure, etc.] during maintenance evolutions, whenever possible. If it is not feasible to eliminate or prevent the need to work at heights with its subsequent exposure to fall hazards, control measures should be included in the design to protect personnel conducting maintenance work after completion of the project. In addition to the detailed requirements included in the provisions of this contract, the design work shall incorporate the requirements of 29 CFR 1910 [29 CFR 1915] Standards and ANSI/ASSE Z359.0, ANSI/ASSE Z359.1, ANSI/ASSE Z359.2, ANSI/ASSE Z359.3, ANSI/ASSE Z359.4 and ANSI/ASSE A1264.1.

3.4 EQUIPMENT

3.4.1 Material Handling and Applicable Mechanized Equipment

a. Material handling equipment such as forklifts shall not be modified with work platform attachments for supporting employees unless specifically delineated in the manufacturer's printed operating instructions.

b. The use of hooks on equipment for lifting of material must be in accordance with manufacturer's printed instructions.

c. Operators of forklifts or power industrial trucks shall be licensed in accordance with OSHA. Proof of qualifications for operator shall be kept on the project site and addressed as part of the AHA.

d. Manufacture specifications or owners manual for the equipment shall be on-site and reviewed for additional safety precautions or requirements that are sometimes not identified by OSHA or USACE EM 385-1-1. Incorporate such additional safety precautions or requirements into the AHAs.

e. Machinery & Mechanized Equipment are subject to additional Navy proof of certification. A certification form for acceptance by the Contracting Officer prior to being placed into use may be required.

3.4.2 Weight Handling Equipment

a. The Contractor shall notify the Contracting Officer 15 days in advance of any cranes entering the activity so that necessary quality assurance spot checks can be coordinated. Prior to cranes entering federal activities, a Crane Access Permit must be obtained from the Contracting Officer. A copy of the permitting process will be provided at the Pre-work Conference. Contractor's operator shall remain with the crane during the spot check.

b. The Contractor shall comply with the crane manufacturer's specifications and limitations for erection and operation of cranes and hoists used in support of the work. Erection shall be performed under the supervision of a designated person (as defined in ASME B30.5). All testing shall be performed in accordance with the manufacturer's recommended procedures.

c. The Contractor shall comply with ASME B30.5 for mobile and locomotive cranes, ASME B30.22 for articulating boom cranes, ASME B30.3 for construction tower cranes, and ASME B30.8 for floating cranes and floating derricks.

d. Under no circumstance shall a Contractor make a lift at or above 90% of the cranes rated capacity in any configuration.

e. When operating in the vicinity of overhead transmission lines, operators and riggers shall be alert to this special hazard and shall follow the requirements of USACE EM 385-1-1 section 11 and ASME B30.5 or ASME B30.22 as applicable.

f. The Contractor shall use cribbing when performing lifts on outriggers.

g. The crane hook/block must be positioned directly over the load. Side loading of the crane is prohibited.

h. Certification records which include the date of inspection, signature of the person performing the inspection, and the serial number or other identifier of the crane that was inspected shall always be available for review by Contracting Officer personnel.

i. Written reports listing the load test procedures used along with any repairs or alterations performed on the crane shall be available for review by Contracting Officer personnel.

j. Certify that all crane operators have been trained in proper use of all safety devices (e.g. anti-two block devices).

k. Take steps to ensure that wind speed does not contribute to loss of control of the load during lifting operations. Prior to conducting lifting operations the contractor shall set a maximum wind speed at which a crane can be safely operated based on the equipment being used, the load being lifted, experience of operators and riggers, and hazards on the work site. This maximum wind speed determination shall be included as part of the activity hazard analysis plan for that operation.

l. Do not use crane suspended personnel work platforms (baskets) unless the Contractor proves that using any other access to the work location would provide a greater hazard to the workers or is impossible. Do not lift personnel with a line hoist or friction crane.

m. Inspect, maintain, and recharge portable fire extinguishers as specified in NFPA 10, Standard for Portable Fire Extinguishers.

n. All employees must keep clear of loads about to be lifted and of suspended loads.

o. A physical barricade must be positioned to prevent personnel from entering the counterweight swing (tail swing) area of the crane.

3.5 EXCAVATIONS

3.5.1 Utility Locations

Prior to digging, the appropriate digging permit must be obtained. In addition to using any government that may be available and utility company locating services the contractor must also utilize a qualified private utility locating service company to locate all underground utilities in the work area. Extreme care must be used when excavating near direct burial electric underground cables. Any markings made during the utility investigation must be maintained throughout the contract. Refer also to instruction contained within Section 01 14 00.05 20 WORK RESTRICTIONS FOR DESIGN-BUILD.

3.5.2 Utility Location Verification

The Contractor must physically verify underground utility locations by hand digging using wood or fiberglass handled tools when any adjacent construction work is expected to come within three feet of the underground system. Digging within 0.061 m (2 feet) of a known utility must not be performed by means of mechanical equipment; hand digging shall be used. If construction is parallel to an existing utility the utility shall be exposed by hand digging every 30.5 m (100 feet) if parallel within 1.5 m (5 feet) of the excavation.

3.5.3 Utilities Within Concrete Slabs

Utilities located within concrete slabs including pier structures, bridges, and the like, are extremely difficult to identify due to reinforcing steel used in the construction of these structures. Whenever contract work involves concrete chipping, saw cutting, or core drilling, the existing utility location must be coordinated with station utility departments in addition to a private locating service. Outages to isolate utility systems shall be used in circumstances where utilities are unable to be positively identified. The use of historical drawings does not alleviate the contractor from meeting this requirement.

3.5.4 Shoring Systems

Trench and shoring systems must be identified in the accepted safety plan and AHA. Manufacture tabulated data and specifications or registered engineer tabulated data for shoring or benching systems shall be readily available on-site for review. Job-made shoring or shielding must have the registered professional engineer stamp, specifications, and tabulated data.

3.5.5 Trenching Machinery

Operate trenching machines with digging chain drives only when the spotters/ laborers are in plain view of the operator. Provide operator and spotters/ laborers training on the hazards of the digging chain drives with emphasis on the distance that needs to be maintained when the digging chain is operating. Keep documentation of the training on file at the project

site.

3.6 ELECTRICAL

3.6.1 Conduct of Electrical Work

As delineated in USACE EM 385-1-1 electrical work is to be conducted in a de-energized state unless there is no alternative method for accomplishing the work. In those cases an energized work permit shall be obtained from the contracting officer. The energized work permit application shall be accompanied by the AHA and a summary of why the equipment/circuit needs to be worked energized. Underground electrical spaces must be certified safe for entry before entering to conduct work. Cables that will be cut must be positively identified and de-energized prior to performing each cut. Attachment of temporary grounds shall be in accordance with ASTM F855 and IEEE 1048. Perform all high voltage cable cutting remotely using hydraulic cutting tool. When racking in or live switching of circuit breakers, no additional person other than the switch operator will be allowed in the space during the actual operation. Plan so that work near energized parts is minimized to the fullest extent possible. Use of electrical outages clear of any energized electrical sources is the preferred method. When working in energized substations, only qualified electrical workers shall be permitted to enter. When work requires Contractor to work near energized circuits as defined by the NFPA 70, high voltage personnel must use personal protective equipment that includes, as a minimum, electrical hard hat, safety shoes, insulating gloves and electrical arc flash protection for personnel as required by NFPA 70E. Insulating blankets, hearing protection, and switching suits may also be required, depending on the specific job and as delineated in the Contractor's AHA. Contractor shall ensure that each employee is familiar with and complies with these procedures and 29 CFR 1910.147.

3.7 WORK IN CONFINED SPACES

In addition to applicable sections of USACE EM 385-1-1, OSHA 29 CFR 1910.146 and OSHA 29 CFR 1926.21(b) (6) the Contractor shall comply with the following. Any potential for a hazard in the confined space requires a permit system to be used.

a. Entry Procedures. Prohibit entry into a confined space by personnel for any purpose, including hot work, until the qualified person has conducted appropriate tests to ensure the confined or enclosed space is safe for the work intended and that all potential hazards are controlled or eliminated and documented. (See Section 06.I.06 of USACE EM 385-1-1 for entry procedures.) All hazards pertaining to the space shall be reviewed with each employee during review of the AHA.

b. Forced air ventilation is required for all confined space entry operations and the minimum air exchange requirements must be maintained to ensure exposure to any hazardous atmosphere is kept below its' action level regardless of classification.

c. Sewer wet wells require continuous atmosphere monitoring with audible alarm for toxic gas detection in addition to continuous forced air ventilation regardless of space classification.

3.8 USE OF EXPLOSIVES

Explosives shall not be used or brought to the project site.

3.9 ERGONOMICS CONSIDERATIONS DURING DESIGN PHASE

Facilities, processes, job tasks, tools and materials shall be designed to reduce or eliminate work-related musculoskeletal (WMSD) injuries and risk factors in the workplace. Designs shall ensure facility maintenance access is designed to reduce WMSD risk factors to the lowest level possible. In addition to the detailed requirements included in the provisions of this contract, the design work shall incorporate the requirements of MIL-STD-1472F, DOD-HDBK 743A and ANSI/HFES 100.

-- End of Section --

SECTION 01 45 00.05 20

DESIGN AND CONSTRUCTION QUALITY CONTROL
11/07

PART 1 GENERAL

1.1 REFERENCES

The publications listed below form a part of this specification to the extent referenced. The publications are referred to in the text by the basic designation only.

ASTM INTERNATIONAL (ASTM)

ASTM E 329	(2008) Agencies Engaged in the Testing and/or Inspection of Materials Used in Construction

U.S. ARMY CORPS OF ENGINEERS (USACE)

EM 385-1-1	(2003) Safety -- Safety and Health Requirements

U.S. GREEN BUILDING COUNCIL (USGBC)

LEED-NC	(2002; R 2005) Leadership in Energy and Environmental Design™ Green Building Rating System for New Construction (LEED-NC)

1.2 SUBMITTALS

The use of a "G" following a submittal indicates that a Government approval action is required. Submit the following in accordance with Section 01 33 10.05 20 DESIGN SUBMITTAL PROCEDURES and Section 01 33 00.05 20 CONSTRUCTION SUBMITTAL PROCEDURES.

SD-01 Preconstruction Submittals

Design Quality Control (DQC) Plan; G

Submit a DQC Plan prior to the Post Award Kickoff Meeting.

Construction Quality Control (CQC) Plan; G

Submit a Construction QC Plan prior to start of construction.

Commissioning Plan; G

Submit a Commissioning Plan within 60 days of approval of CxAuthority.

SD-07 Certificates

Preliminary Inspections and Final Acceptance Testing; G

Final Life Safety/Fire Protection Certification; G

IBC Special Inspections Certification; G

SD-11 Closeout Submittals

Summary Commissioning Report; G

Training Course Outline; G

Training Video Recording; G

1.3 QC PROGRAM REQUIREMENTS

Establish and maintain a QC program that is administered by a Design and Construction Quality Control organization, using Quality Control (Design and Construction) Plans, Commissioning Plans and Reports, meetings, a Coordination and Mutual Understanding Meeting, three phases of control, submittal review and approval, testing, completion inspections, and QC certifications and documentation necessary to provide design, materials, equipment, workmanship, fabrication, construction and operations which comply with the requirements of this Contract. The QC program shall cover on-site and off-site work. No construction work or testing may be performed unless the QC Manager is on the work site.

1.3.1 Mutual Understanding Meeting

The purpose of this meeting is to develop a mutual understanding of the QC details, including documentation, administration, requirements & procedures, coordination of activities to be performed, and the coordination of the contractor's management, production and QC personnel. At the meeting, the contractor will explain in detail how the three phases of quality control will be implemented for each DFOW.

1.3.2 Design and Construction Quality Control Plans

The Contractor shall provide a project specific Design Quality Control (DQC) Plan and Construction Quality Control (CQC) Plan, for review and approval by the Government. The Contractor shall perform no design until the DQC Plan is approved and no construction until the CQC Plan is approved. The Contractor's plan shall include the following:

a. The QC organization for this contract, including member resumes.

b. A letter from an officer of the company designating the QC Manager, Alternate QC Manager, DQC Manager, [Commissioning Authority,]and their authority.

c. QC Manager qualifications.

d. DQC Manager qualifications.

e. List of Definable Features of Work (DFOW) including list of design submittal packaging. DFOW is a task that is separate and distinct

from other tasks and has control requirements and work crews unique to the task.

f. For the CQC Plan, a plan to implement the "Three Phases of Control" for each DFOW.

g. For the CQC Plan, a testing Plan, log and list of personnel and accredited laboratories that will perform tests. Construction materials testing laboratories must be accredited by a laboratory accreditation authority and will be required to submit a copy of the Certificate of Accreditation and Scope of Accreditation with the testing plan.[Coordinate this testing Plan with the Commissioning Plan verification testing requirements to avoid duplication of effort.]

h. Submittal Register including design submittals, listing personnel who will review submittals and noting submittals for Government review.

i. Procedures for submitting and reviewing variations prior to submission to the Government.

j. As a part of the Contractor's CQC plan, a statement of Special Inspections shall be prepared by the Designer of Record (DOR) describing a complete list of materials and work requiring special inspections, the inspections to be performed and any applicable quality assurance plans and structural observations. The Contractor's plan shall implement the applicable requirements of the International Building Code (IBC), Chapter 17 "Structural Tests and Special Inspections." The plan shall include a listing of the individuals, approved agencies or firms that will be retained for conducting the required special inspections accompanied by a description of individual inspector's experience and a copy of all required certifications. Structural tests and special inspections, as outlined in Chapter 17 of the IBC, shall be conducted by individuals and agents that are under the direct supervision of a Registered Design Professional (RDP) and meet the requirements of ASTM E 329.

k. A plan for assuring the proper design, construction, installation of all life safety and fire protection features across all disciplines and trades. Examples of life safety and fire protection features include, but are not limited to, water distribution systems including fire pumps and fire hydrants, fire resistive assemblies such as fire rated walls/partitions and spray-applied fire proofing of structural components, fire alarm and detection systems, fire suppression and standpipe systems, means of egress components, emergency and exit lighting fixtures. As a part of the plan, a statement of Special Inspections shall be prepared by the Fire Protection Engineer Designer of Record (DOR) describing a complete list of materials and work requiring special inspections, the inspections to be performed and any applicable quality assurance plans and fire protection observations. The plan will include a listing of the individuals, approved agencies or firms that will be retained for conducting the required special inspections accompanied by a description of individual inspector's experience and a copy of all required certifications.

l. For the DQC plan, submit a formal Communication Plan that indicates the frequency of design meetings and what information is covered in those meetings, key design decision points tied to the Network Analysis Schedule and how the DOR plans to include the Government in those decisions, peer review procedures,

interdisciplinary coordination, design review procedures, comment resolution, etc.

The Communication Plan will emphasize key decisions and possible problems the Contractor and Government may encounter during the design phase of the project. Provide a plan to discuss design alternatives and design coordination with the stakeholders at the key decision points as they arise on the project. Identify individual stakeholders and suggested communication methods that will be employed to expedite and facilitate each anticipated critical decision. Communication methods may include: Concept Design Workshop, over-the-shoulder review meetings, presentation at client's office, lifecycle cost analysis presentation, technical phone conversation, and formal review meeting. The design portion of the Communication Plan must be written by the DQC Manager and confirmed during the Post Award Kick off Partnering. Update the Communication Plan at every Partnering meeting.

m. For the DQC Plan, procedures for insuring the design documents are submitted in accordance with UFC 1-300-09N, *Design Procedures* and other procedures to ensure disciplines have been properly coordinated to eliminate conflicts.

n. For the DQC Plan, a list of design subcontractors and the scope of the work which each firm will accomplish.

1.3.3 Commissioning Plan

The Contractor shall provide a project specific Commissioning Plan for review and acceptance by the Government. Develop and submit the Commissioning Plan to define the on-site activities and roles and responsibilities for commissioning all building systems required by the Project Program paragraph entitled, Building Commissioning. The Commissioning Plan shall be updated as information changes during the project. The Plan shall include all items required by the LEED-NC version 3.0 and shall include the following:

a. Commissioning Authority qualifications and experience.

b. A description of the Commissioning Team’s roles and responsibilities as well as organizational relationships with the Contractor's QC Manager, DQC Manager, and verification and testing personnel.

c. A listing of all systems required to be commissioned.

d. A description of all commissioning process activities. Include the sequence and schedule for starting and balancing air distribution systems to ensure construction materials, such as architectural finishes, are installed under the appropriate environmental conditions. Also address the procedure that will be used to "dry out" the structure.

e. A procedures and schedule for functional performance tests of all systems to be commissioned. The Commissioning Authority shall be present for all functional performance tests. Coordinate this schedule with the QC Plan testing requirements to avoid duplication of effort.

f. A procedure and schedule detailing training sessions for Government personnel. Training sessions are to address

maintenance and operation of systems required to be commissioned.

1.3.4 Summary Commissioning Report

The Commissioning Authority shall provide a Summary Commissioning Report upon completion of the performance verification items. The Summary Commissioning Report shall include all items required by LEED-NC version 2.2 and shall include the following:

a. Executive Summary of the commissioning process including results and observations of the commissioning program.

b. A history of deficiencies identified and their resolution. Indicate Outstanding issues to be resolved.

c. Commissioned systems performance test results and evaluations.

1.4 QC ORGANIZATION

The QC Manager shall manage the QC organization and shall report to an officer of the firm and shall not be subordinate to the Project Superintendent or the Project Manager.

1.4.1 QC and Alternative QC Manager

QC and Alternative QC Manager qualifications:

a. Complete the course entitled "Construction Quality Management (CQM) for Contractors." and shall maintain a current certificate.

b. Five years of combined experience as a Superintendent, QC Manager, Project Manager, or Project Engineer on similar size and type construction contracts, and at least two years experience as a QC Manager.

c. Familiar with requirements of USACE EM 385-1-1, and experience in the areas of hazard identification and safety compliance.

QC and Alternative QC Manager responsibilities:

a. Participate in the Post Award Kick-off, Partnering, Preconstruction, Design Development, and Coordination and Mutual Understanding Meetings.

b. Implement the "Three Phase of Control" plan for each DFOW and notify the Contracting Officer at least 3 business days in advance of each Preparatory and Initial Phase meeting. Submit respective checklists to the Contracting Officer the next business day.

c. Ensure that no construction begins before the DOR has finalized the design for that segment of work, and construction submittals are approved as required.

d. Inspect all work and rework, using International Conference of Building Officials certified QC specialists as applicable, to ensure its compliance with contract requirements. Maintain a rework log.

e. Immediately stop any segment of work, which does not comply with the contract and plans and specifications, and direct the removal and replacement of any defective work.

f. Remove any individual from the site who fails to perform their work in a skillful, safe and workmanlike manner or whose work does not comply with the contract plans and specifications.

g. Prepare daily QC Reports.

h. Ensure that Contractor Production Reports are prepared daily.

i. Hold weekly QC meetings with the DQC Manager, Commissioning Authority, DOR (or representative), Superintendent and the Contracting Officer; participation shall be suitable for the phase of work. Distribute minutes of these meetings.

j. Ensure that design and construction submittals are reviewed and approved, as required by the contract, prior to allowing material on site and work to proceed with these items. Maintain a submittal register.

k. Update As-built drawings daily, maintaining up-to-date set on site.

l. Maintain a testing plan and log. Ensure that all testing is performed in accordance with the contract. Review all test reports and notify the Contracting Officer of all deficiencies, along with a proposal for corrective action.

m. Maintain rework log on site, noting dates deficiency identified, and date corrected.

n. Certify and sign statement on each invoice that all work to be paid under the invoice has been completed in accordance with contract requirements.

o. Perform Punch-out and participate in Pre-final and Final acceptance Inspections. Submit list of deficiencies to the Contracting Officer for each inspection. Correct all deficiencies prior to the Final inspection. Notify Contracting Officer prior to final inspection to establish a schedule date acceptable by the Contracting Officer.

p. Ensure that all required keys, operation and maintenance manuals, warranty certificates, and the As-built drawings are correct and complete, in accordance with the contract, and submitted to the Contracting Officer.

q. Assure that all applicable tests, special inspections, and observations required by the contract are performed.

r. Coordinate all factory and on-site testing, Testing Laboratory personnel, QC Specialists, and any other inspection and testing personnel required by this Contract.

s. Notify the Contracting Officer of any proposed changes to the QC plan.

t. Retain a copy of approved submittals at project site, including Contractor's copy of approved samples.

u. Update the Performance Assessment Plan as described in the UFGS section 01 31 19.05 20, Post Award Meetings and discuss monthly at a QC meeting.

1.4.2 DQC Manager

The DQC Manager shall be a member of the QC organization, shall coordinate actions with the QC Manager, and shall not be subordinate to the Project Superintendent or the Project Manager. The DQC Manager may also act as the Commissioning Authority if all Commissioning Authority qualifications are met.

DQC Manager qualifications:

a. A minimum of 5 years experience as a design Architect or Engineer on similar size and type designs /or design-build contracts. Provide education, experience, and management capabilities on similar size and type contracts.

b. Be a registered professional engineer or architect with an active registration. Provide proof of registration as part of the resume submittal package.

DQC Manager responsibilities:

a. Be responsible for the design integrity, professional design standards, and all design services required.

b. Be a member of the Designer of Record's (DOR) firm.

c. Be responsible for development of the design portion of the QC Plan, incorporation and maintenance of the approved Design Schedule, and the preparation of DQC Reports and minutes of all design meetings.

d. Participate in the Post Award Kick-Off, all design planning meetings, design presentations, partnering, and QC meetings.

e. Implement the DQC plan and shall remain on staff involved with the project until completion of the project.

f. Be cognizant of and assure that all design documents on the project have been developed in accordance with the Contract, and have been properly coordinated.

g. Develop the submittal register. Coordinate with each DOR to determine what items need to be submitted, and who needs to approve.

h. Coordinate all training issues and validate that the testing and training requirements of this contract are accomplished.

i. Provide QC certification for design compliance.

j. Certify and sign statement on each invoice that all work to be paid to the DOR under the invoice has been completed in accordance with the contract requirements.

k. Prepare weekly DQC Reports that documents the work the design

team accomplished that week.

1.4.3 Commissioning Authority

Commissioning Authority qualifications:

The Commissioning Authority shall be a member of the QC organization, shall coordinate actions with the QC Manager, shall not be subordinate to the Project Superintendent or the Project Manager, and shall report findings directly to the Government. The Commissioning Authority may also act as the DQC Manager if all DQC Manager qualifications are met. The Commissioning Authority selected shall meet the requirements of LEED-NC with the following additional qualifications:

a. Be certified by a recognized Building Commissioning Organization. Acceptable minimum certifications are "Certified Cx Agent" from the Associated Air Balance Council (AABC); "Certified Building Cx Professional" from the Association of Energy Engineers (AEE); "Certified Cx Professional (CxP)" from the Building Commissioning Association (BCA); or "Commissioning Process Authority Professional" or "Commissioning Process Manager" from the University of Wisconsin College of Engineering.

b. Have documented Commissioning Authority experience in at least two building projects. Provide proof of commissioning experience as pert of the Commissioning Plan.

Commissioning Authority responsibilities:

a. Be responsible for development of the Commissioning Plan, the Summary Commissioning Report, and minutes of all commissioning meetings.

b. Participate in the Post Award Kick-Off, all design planning meetings, design presentations, partnering, and QC meetings.

c. Review the Request for Proposal (RFP) for energy and sustainability goals, system expectations, O&M requirements, training expectations, and construction quality expectations.

d. Review the Basis of Design and ensure the RFP requirements are met.

e. Ensure commissioning requirements are incorporated into the construction documents.

f. Be responsible for implementation and updating of the Commissioning Plan.

g. Be responsible for development of systems functional testing procedures.

h. Ensure pre-functional installation inspections are performed on all systems indicated to be commissioned in accordance with the Commissioning Plan and Contract documents.

i. Verify systems performance of all systems indicated to be commissioned in accordance with the Commissioning Plan and Contract documents.

j. Report any deficiencies in installation or performance of all systems indicated to be commissioned.

k. Coordinate all training issues and validate that the testing and training requirements of this contract are accomplished.

1.4.4 QC Specialists

QC Specialists shall assist and report to the QC Manager and may perform production related duties but must be allowed sufficient time to perform their assigned quality control duties. QC Specialists are required to attend the Coordination and Mutual Understanding Meeting, QC meetings and be physically present at the construction site to perform the three phases of control and prepare documentation for each definable feature of work in their area of responsibility at the frequency specified below.

1.4.4.1 Fire Protection QC Specialist

The Fire Protection QC Specialist shall be a U.S. Registered Fire Protection Engineer (FPE) and shall be an integral part of the Prime Contractor's Quality Control Organization. This FPE shall have no business relationships (owner, partner, operating officer, distributor, salesman, or technical representative) with any fire protection equipment device manufacturers, suppliers or installers for any such equipment provided as part of this project. The Fire Protection Designer of Record may serve as the lead Fire Protection QC Specialist, provided the following qualifications are met.

a. Qualifications/Experience: The FPE shall have obtained their professional registration by successfully completing the Fire Protection Engineering discipline examination. This FPE shall have a minimum of 5 years full time and exclusive experience in every aspect of facility design and construction as it relates to fire protection, which includes, but is not limited to, building code analysis, life safety code analysis, design of automatic detection and suppression systems, passive fire protection design, water supply analysis, and a multi-discipline coordination reviews, and construction surveillance.

b. Area of Responsibility: The FPE is responsible for assuring the proper construction and installation of life safety and fire protection features across all disciplines and trades. The FPE shall be responsible for assuring that life safety and fire protection features are provided in accordance with the design documents, approved construction submittals, and manufacturer's requirements. Examples include, but are not limited to, water distribution systems including fire pumps and fire hydrants, fire resistive assemblies such as spray-applied fire proofing of structural components and fire rated walls/partitions, fire alarm and detection systems, fire suppression and standpipe systems, emergency and exit lighting fixtures, etc.

c. Construction Surveillance: The FPE shall visit the construction site as necessary to ensure life safety and fire protection systems are being constructed, applied, and installed in accordance with the approved design documents, approved construction submittals, and manufacturer's requirements. Frequency and duration of the field visits are dependent upon particular system components, system complexity, and phase of construction. At a minimum, field visits shall occur just prior to installation of suspended ceiling systems to inspect the integrity of passive fire protection features and fire suppression

system piping, and required performance verification testing of all life safety and fire protection systems identified below and in Part 4.

(1) Preliminary Inspections and Final Acceptance Testing: FPE shall personally witness all preliminary inspections of fire alarm/detection and suppression systems. Once preliminary inspections have been successfully completed, the FPE shall submit a signed certificate to the QC Manager that systems are ready for final inspection and testing. The Naval Facilities Engineering Command Fire Protection Engineer will witness formal tests and approve all systems before they are accepted. The QC Manager shall submit the request for formal inspection at least 15 days prior to the date the inspection is to take place. The QC manager shall provide 10 days advance notice to the Contracting Officer and the activity Fire Inspection Office of scheduled final inspections.

(2) Final Life Safety/Fire Protection Certification Documentation: The FPE shall provide certification that all life safety and fire protection systems have been inspected and, in the FPE's professional judgment, have been installed in accordance with the contract documents, approved submittals, and manufacturer's requirements. This certification shall summarize all life safety and fire protection features, and shall bear the professional seal of the fire protection engineer.

1.4.4.2 Mechanical QC Specialist

Qualification/Experience in Area of Responsibility	Area of Responsibility	Frequency
Mechanical Inspector, International Conference of Building Officials (ICBO) Certified/ 5 years minimum	Installation and Testing of Boilers	Minimum 3 times a week during installation and full-time during testing
Elevator Inspector, International Conference of Building Officials (ICBO) Certified/ 5 years minimum	Testing of Elevators	Minimum 3 times a week during installation and full-time during testing
Mechanical Testing QC Specialist/Registered Mechanical Engineer, (PE)	Testing of Mechanical Systems	Full-time during testing

1.4.4.3 Soils Testing/Pile Installation and Testing QC Specialists

Provide IBC Special Inspections Certification provided by the following specialist(s):

Qualification/Experience in Area of Responsibility	Area of Responsibility	Frequency
Under Supervision of P.E.]	Soil Testing Pile Installation And Testing	See IBC Chapter 17

1.5 THREE PHASES OF CONTROL

The Three Phases of Control shall adequately cover both on-site and off-site work and shall include the following for each DFOW.

1.5.1 Preparatory Phase

Notify the Contracting Officer at least two work days in advance of each preparatory phase meeting. The meeting shall be conducted by the QC Manager and attended by the Project Superintendent, QC Specialists, and the foreman responsible for the DFOW. The DQC Manager shall also attend if required by structural tests and special inspections, as outlined in Chapter 17 of the IBC and the DQC Plan. When the DFOW will be accomplished by a subcontractor, that subcontractor's foreman shall attend the preparatory phase meeting. Document the results of the preparatory phase actions in the [daily Contractor Quality Control Report and in the] Preparatory Phase Checklist. Perform the following prior to beginning work on each DFOW:

a. Review each paragraph of the applicable specification sections;

b. Review the Contract drawings;

c. Verify that appropriate shop drawings and submittals for materials and equipment have been submitted and approved. Verify receipt of approved factory test results, when required;

d. Review the testing plan and ensure that provisions have been made to provide the required QC testing;

e. Examine the work area to ensure that the required preliminary work has been completed;

f. Examine the required materials, equipment and sample work to ensure that they are on hand and conform to the approved shop drawings and submitted data;

g. Discuss the specific controls used in construction methods, construction tolerances, workmanship standards, and the approach that will be used to provide quality construction by planning ahead and identifying potential problems for each DFOW; and

h. Review the APP and appropriate Activity Hazard Analysis (AHA) to ensure that applicable safety requirements are met, and that required Material Safety Data Sheets (MSDS) are submitted.

1.5.2 Initial Phase

Notify the Contracting Officer at least two work days in advance of each initial phase. When construction crews are ready to start work on a DFOW, conduct the initial phase with the Project Superintendent, QC Specialists, and the foreman responsible for that DFOW. The DQC Manager shall also attend if required by structural tests and special inspections, as outlined in Chapter 17 of the IBC and the DQC Plan. Observe the initial segment of the DFOW to ensure that the work complies with Contract requirements. Document the results of the initial phase in the [daily CQC Report and in] Initial Phase Checklist. Repeat the initial phase for each new crew to work on-site, or when acceptable levels of specified quality are not being met. Perform the following for each DFOW:

a. Establish the quality of workmanship required;

b. Resolve conflicts;

c. Ensure that testing is performed by the approved laboratory, and

d. Check work procedures for compliance with the APP and the appropriate AHA to ensure that applicable safety requirements are met.

e. Ensure manufacturer's representative has performed necessary inspections, if required.

1.5.3 Follow-Up Phase

Perform the following for on-going work daily, or more frequently as necessary, until the completion of each DFOW and document in the daily CQC Report:

a. Ensure the work is in compliance with Contract requirements;

b. Maintain the quality of workmanship required;

c. Ensure that testing is performed by the approved laboratory; and

d. Ensure that rework items are being corrected.

1.5.4 Additional Preparatory and Initial Phases

Additional preparatory and initial phases shall be conducted on the same DFOW if the quality of on-going work is unacceptable, if there are changes in the applicable QC organization, if there are changes in the on-site production supervision or work crew, if work on a DFOW is resumed after substantial period of inactivity, or if other problems develop.

1.5.5 Notification of Three Phases of Control for Off-Site Work

Notify the Contracting Officer at least two weeks prior to the start of the preparatory and initial phases.

1.6 COMPLETION INSPECTIONS

The Contractor shall perform the necessary prefinal inspections, compile punchlists, and correct deficiencies. Notify the Contracting Officer 5 calendar days prior to the date a prefinal inspection can be held. Notify the Contracting Officer at least 14 calendar days prior to the date a final acceptance inspection can be held. The Government will perform final inspection to verify that the facility is complete and ready to be occupied. All items previously identified on the prefinal punchlist will have been corrected and acceptable.

1.7 TRAINING

The DQC Manager shall provide a comprehensive project-specific Government personnel training program for the systems of the facility specified in the technical specifications of this Contract. The core of this training will be based on manufacturer's recommendations and the operation and maintenance support information (OMSI) provided as a part of this Contract. Training shall include classroom discussion as well as hands on maintenance, replacement of typical components and repair type maintenance training for parts typically replaced or repaired in the field, such as:

1. Domestic water pressure boosting system

2. Plumbing systems, including temperature actuated thermostatic water mixing valve

3. HVAC Systems, including chillers, boilers, heat pumps, air handling equipment, exhaust fans, fan coil units, hot and chilled water pumping system

4. Steam condensate pumps

5. Direct Digital Controls/Space Temperature Controls

6. Electrical systems, including transformers, diesel-electric generator sets, automatic transfer switches, primary switchgear, secondary switchgear, high-voltage switchgear, variable frequency drives, and frequency converters

7. Fire protection systems, including fire alarm systems and detection systems

8. Site mechanical utilities, including cathodic protection

9. Site electrical utilities, including substations, transformers, and pad mounted switchgear

Provide each trainee in the course a written training course outline. Submit outline for approval at least 90 calendar days prior to training session. Provide to the Contracting Officer two copies of the training video recording in VHS or DVD format. Confirm media format required with the using activity. The recording shall capture, in video and audio, all instructors training presentations including question and answer periods with the trainees.

1.8 DOCUMENTATION

Maintain current and complete records of on-site and off-site QC program operations and activities.

PART 2 PRODUCTS

Not used.

PART 3 EXECUTION

Not used.

-- End of Section --

SECTION 01 50 00.05 20

TEMPORARY FACILITIES AND CONTROLS FOR DESIGN-BUILD
11/07

PART 1 GENERAL

1.1 REFERENCES

The publications listed below form a part of this specification to the extent referenced. The publications are referred to within the text by the basic designation only.

AMERICAN WATER WORKS ASSOCIATION (AWWA)

AWWA C511	(1997) Reduced-Pressure Principle Backflow Prevention Assembly

FOUNDATION FOR CROSS-CONNECTION CONTROL AND HYDRAULIC RESEARCH (FCCCHR)

FCCCHR List	(continuously updated) List of Approved Backflow Prevention Assemblies
FCCCHR Manual	(9th Edition) Manual of Cross-Connection Control

NATIONAL FIRE PROTECTION ASSOCIATION (NFPA)

NFPA 241	(2000) Safeguarding Construction, Alteration, and Demolition Operations
NFPA 70	(2005) National Electrical Code

U.S. FEDERAL HIGHWAY ADMINISTRATION (FHWA)

FHWA SA-89-006	(1988) Manual on Uniform Traffic Control Devices for Streets and Highways

U.S. NATIONAL ARCHIVES AND RECORDS ADMINISTRATION (NARA)

40 CFR 247	Comprehensive Procurement Guideline for Products Containing Recovered

1.2 SUBMITTALS

The use of a "G" following a submittal indicates that a Government approval action is required. Submit the following in accordance with Section 01 33 10.05 20 DESIGN SUBMITTAL PROCEDURES and Section 01 33 00.05 20 CONSTRUCTION SUBMITTAL PROCEDURES.

SD-01 Preconstruction Submittals

Traffic control plan; G

Construction site plan; G

SD-03 Product Data

Backflow preventers

SD-06 Test Reports

Backflow Preventer Tests; G

SD-07 Certificates

Backflow Tester Certification; G

Backflow Preventers Certificate of Full Approval

1.3 EPA LISTED ITEMS USED IN CONDUCT OF THE WORK BUT NOT INCORPORATED IN THE WORK

There are many products listed in 40 CFR 247 which have been designated or proposed by EPA to include recycled or recovered materials that may be used by the Contractor in performing the work but will not be incorporated into the work. These products include office products, temporary traffic control products, and pallets. These non-construction products contain the highest practicable percentage of recycled or recovered materials and can be recycled when no longer needed.

1.4 CONSTRUCTION SITE PLAN

Prior to the start of work, submit a site plan showing the locations of temporary facilities (including layouts and details, equipment and material storage area (onsite and offsite), and access and haul routes used for this contract. Show locations of safety and construction fences, site trailers, construction entrances, trash dumpsters, temporary sanitary facilities, and worker parking areas.

1.5 BACKFLOW PREVENTERS CERTIFICATE

Certificate of Full Approval from FCCCHR List, University of Southern California, attesting that the design, size and make of each backflow preventer has satisfactorily passed the complete sequence of performance testing and evaluation for the respective level of approval. Certificate of Provisional Approval will not be acceptable.

1.5.1 Backflow Prevention Training Certificate

The Contractor shall submit a certificate recognized by the State or local authority that states the Contractor has completed at least 10 hours of training in backflow preventer installations. The certificate must be current.

1.6 TEMPORARY UTILITIES

The point at which the Government will deliver such utilities or services and the quantity available shall be coordinated with the Contracting Officer. The Contractor shall pay all costs incurred in connecting, converting, and transferring the utilities to the work. The Contractor shall make connections, including providing backflow-preventing devices on connections to domestic water lines; providing meters; and providing transformers; and make disconnections. Under no circumstances will taps to base fire hydrants be allowed for obtaining domestic water.

1.6.1 Contractor Utilities

The Contractor shall provide his own utilities.

1.7 BACKFLOW TESTER CERTIFICATION

Prior to testing, submit to the Contracting Officer certification issued by the State or local regulatory agency attesting that the backflow tester has successfully completed a certification course sponsored by the regulatory agency. Tester shall not be affiliated with any company participating in any other phase of this Contract.

Certified by the City of San Diego.

1.8 WEATHER PROTECTION

Take necessary precautions to ensure that roof openings and other critical openings in the building are monitored carefully. Take immediate actions required to seal off such openings when rain or other detrimental weather is imminent, and at the end of each workday.

1.8.1 Building and Site Storm Protection

When a warning of gale force winds is issued, take precautions to minimize danger to persons, and protect the work and nearby Government property. Precautions shall include, but are not limited to, closing openings; removing loose materials, tools and equipment from exposed locations; and removing or securing scaffolding and other temporary work. Close openings in the work when storms of lesser intensity pose a threat to the work or any nearby Government property.

1.8.1.1 -Typhoon Condition of Readiness

Unless directed otherwise, comply with:

a. Condition FOUR (Sustained winds of 93 km/hr(58 mph) or greater expected within 72 hours): Normal daily jobsite cleanup and good housekeeping practices. Collect and store in piles or containers all scrap lumber, waste material, and rubbish for removal and disposal at the close of each work day. Maintain the construction site including storage areas, free of accumulation of debris. Stack form lumber in neat piles less than one meter(4 feet) high. Remove all debris, trash, or objects that could become missile hazards. Review requirements pertaining to "Condition THREE" and

continue action as necessary to attain "Condition FOUR" readiness. Contact Contracting Officer for [Condition Requirements] [Condition of Readiness (COR) updates and completion of required actions].

b. Condition THREE (Sustained winds of 93 km/hr(58 mph) or greater expected within 48 hours): Maintain "Condition FOUR" requirements and commence securing operations necessary for "Condition TWO" readiness. Cease all routine activities which might interfere with securing operations. Commence securing and stow all gear and portable equipment. Make preparations for securing buildings. Reinforce or remove formwork and scaffolding. Secure machinery, tools, equipment, materials, or remove from the jobsite. Expend every effort to clear all missile hazards and loose equipment from general base areas. Contact Contracting Officer for weather and COR updates and completion of required actions.

c. Condition TWO (Sustained winds of 93 km/hr(58 mph) or greater expected within 24 hours): Secure the jobsite, and leave Government premises.

d. Condition ONE (Sustained winds of 93 km/hr(58 mph) or greater expected within 12 hours): Contractor access to the jobsite and Government premises is prohibited.

1.10 STORAGE AREAS

Contractor shall be responsible for security of his property. The Contract Clause entitled "FAR 52.236-10, Operations and Storage Areas" and the following apply:

1.11 TEMPORARY SANITARY FACILITIES

Provide adequate sanitary conveniences of a type approved for the use of persons employed on the work, properly secluded from public observation, and maintained in such a manner as required and approved by the Contracting Officer. Maintain these conveniences at all times without nuisance. Upon completion of the work, remove the conveniences from the premises, leaving the premises clean and free from nuisance. Dispose of sewage through connection to a municipal, district, or station sanitary sewage system. Where such systems are not available, use chemical toilets or comparably effective units, and periodically empty wastes into a municipal, district, or station sanitary sewage system, or remove waste to a commercial facility. Include provisions for pest control and elimination of odors.

1.12 TEMPORARY BUILDINGS

Temporary facilities (including trailers) shall be in like new condition and shall be maintained throughout the project. Locate these facilities where directed and within the indicated operations area. Failure to maintain storage trailers or buildings to these standards shall result in the removal of non-complying units at the Contractor's expense. A sign not smaller than 600 by 600 mm(24 by 24 inches) shall be conspicuously placed on the trailer depicting the company name, business phone number, and emergency phone number. Trailers shall be anchored to resist high winds and must meet applicable state of local standards for anchoring mobile trailers. Storage of material/debris under such facilities is prohibited. Maintenance and repair services are available on a cost reimbursable basis. Contractor shall be responsible for the security of the stored property.

PART 2 PRODUCTS

2.1 BACKFLOW PREVENTERS

Reduced pressure principle type conforming to the applicable requirements AWWA C511. Provide backflow preventers complete with 65 kg (150 pound) flanged cast iron or brass mounted gate valve and strainer, 304 stainless steel or bronze, internal parts. The particular make, model/design, and size of backflow preventers to be installed shall be included in the latest edition of the List of Approved Backflow Prevention Assemblies issued by the FCCCHR List and shall be accompanied by a Certificate of Full Approval from FCCCHR List.

2.2 PROJECT SIGN

Prior to initiating any work on site, provide one project identification sign at the location coordinated with the Contracting Officer. Construct the sign in accordance with project sign detail attached at the end of this section. Maintain sign throughout the life of the project. Upon completion of the project, remove the sign from the site. Provide color rendering of the project. Reproduce the rendering on the signboard or enclose a copy of the rendering under a water-proof, transparent cover, and caulk for weather protection. Provide rendering in accordance with Section 01 33 10.05 20 DESIGN SUBMITTAL PROCEDURES.

PART 3 EXECUTION

3.1 TEMPORARY PHYSICAL CONTROLS

3.1.1 Access Controls

3.1.1.1 Temporary Barricades

Contractor shall provide for barricading around all work areas to prevent public access.

3.1.1.2 Fencing

Not Used.

3.1.1.3 Signs

Place warning signs at the construction area perimeter designating the presence of construction hazards requiring unauthorized persons to keep out. Signs must be placed on all sides of the project, with at least one sign every 90 m(300 feet). All points of entry shall have signs designating the construction site as a hard hat area.

3.1.1.4 Traffic Work

All work around/involving roadways, to include roadway excavations and utility crossings, will be conducted in accordance with Manual of Traffic Control Devices. Contractors shall provide and ensure appropriate road closure and detour signs are established as necessary for motor traffic management. All road closures shall be coordinated with the Contracting Officer in advance. Self-illuminated (lighted) barricades shall be provided during hours of darkness. Brightly-colored (orange) vests are required for all personnel working in roadways. Road closures shall require a road closure plan showing the location of signage.

3.2 TEMPORARY WIRING

Provide temporary wiring in accordance with NFPA 241 and NFPA 70, Assured Equipment Grounding Conductor Program. Program shall include frequent inspection of all equipment and apparatus.

3.3 REDUCED PRESSURE BACKFLOW PREVENTERS

Provide an approved reduced pressure backflow prevention assembly at each location where the Contractor taps into the Government potable water supply.

A certified tester(s) shall perform testing of backflow preventer(s) for proper installation and operation and provide subsequent tagging. Backflow preventer tests shall be performed using test equipment, procedures, and certification forms conforming to those outlined in the latest edition of the Manual of Cross-Connection Control published by the FCCCHR Manual. Test and tag each reduced pressure backflow preventer upon initial installation (prior to continued water use) and monthly thereafter. Tag shall contain the following information: make, model, serial number, dates of tests, results, maintenance performed, and signature of tester. Record test results on certification forms conforming to requirements cited earlier in this paragraph.

3.4 GRASS CUTTING

Cut grass (or annual weeds) within the construction and storage sites to a maximum 100 mm(4 inch) height at least once a week during the growing season unless the grass area is not visible to the public. Trim the grass around fences at time of grass cutting. Maintain grass or weeds on stockpiled earth as needed to maintain the site in a neat and orderly appearance.

-- End of Section --

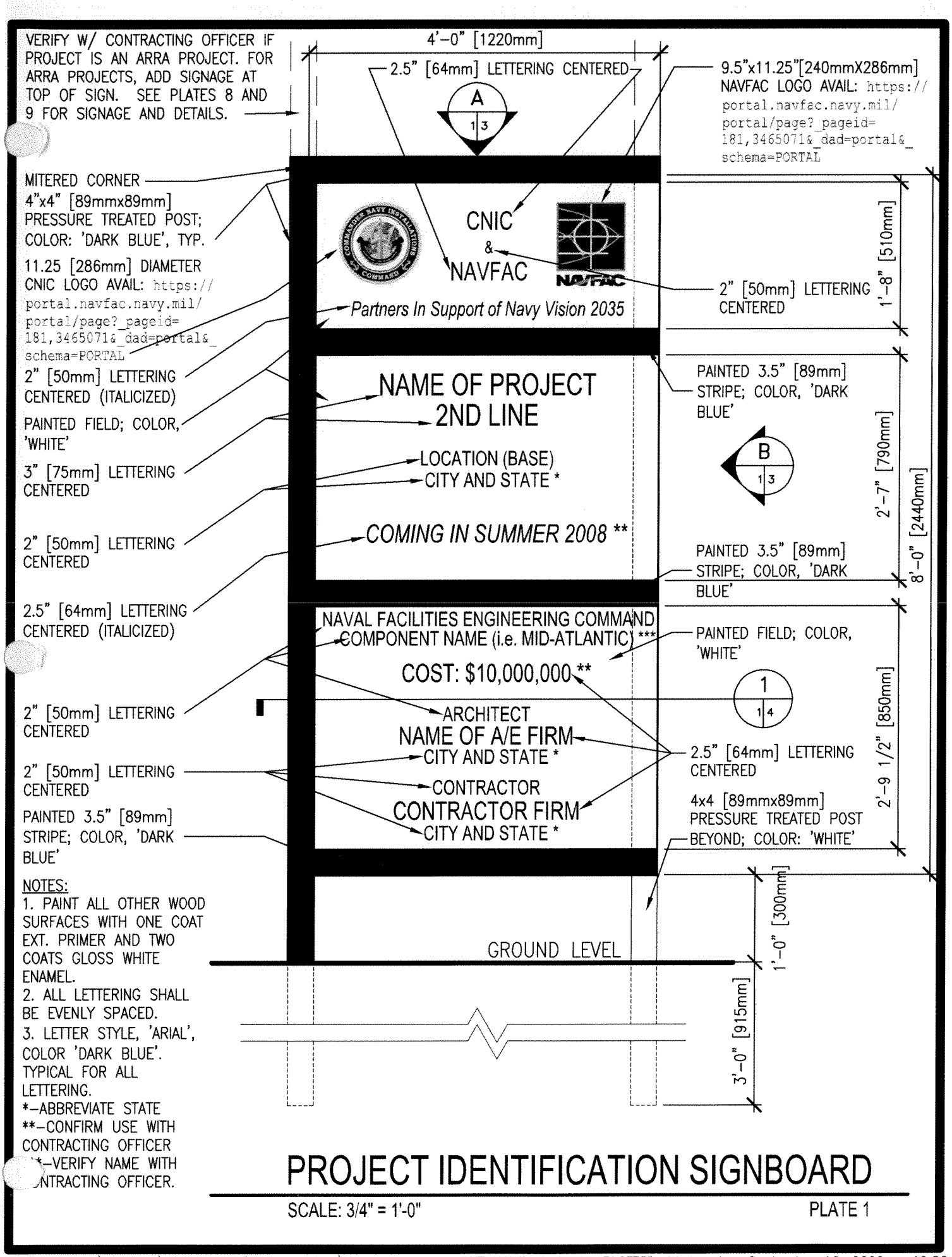

PROJECT IDENTIFICATION SIGNBOARD

SCALE: 3/4" = 1'-0"

PLATE 1

FILE NAME: Z:\Projects\!New NAVFAC Project Sign\Plate 1.dwg LAYOUT NAME: Plate 1 PLOTTED: Wednesday, September 16, 2009 - 10:20am

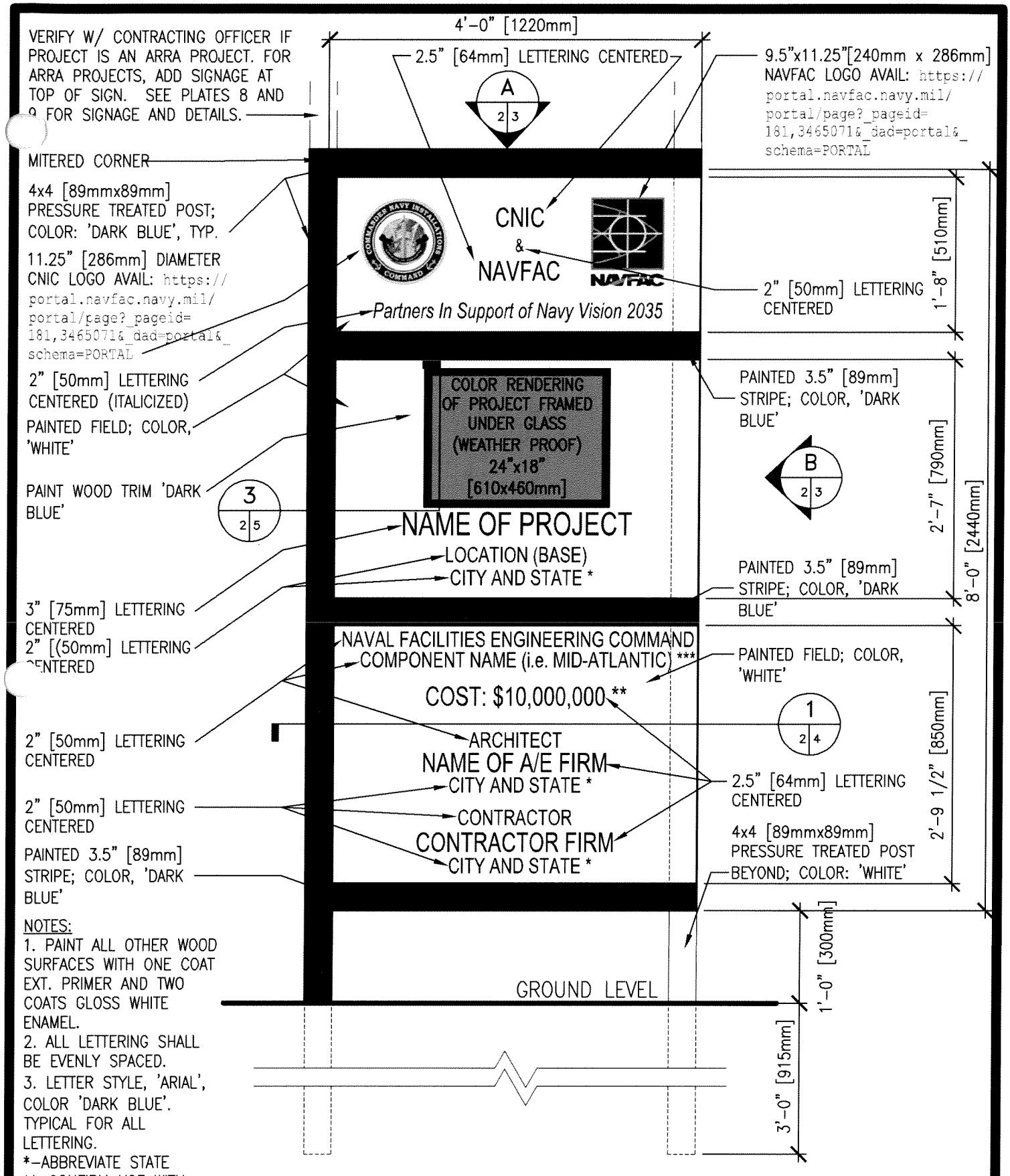

NOTES:
1. PAINT ALL OTHER WOOD SURFACES WITH ONE COAT EXT. PRIMER AND TWO COATS GLOSS WHITE ENAMEL.
2. ALL LETTERING SHALL BE EVENLY SPACED.
3. LETTER STYLE, 'ARIAL', COLOR 'DARK BLUE'. TYPICAL FOR ALL LETTERING.

*–ABBREVIATE STATE
**–CONFIRM USE WITH CONTRACTING OFFICER
***–VERIFY NAME WITH CONTRACTING OFFICER.

PROJECT IDENTIFICATION SIGNBOARD

SCALE: 3/4" = 1'-0"

PLATE 2

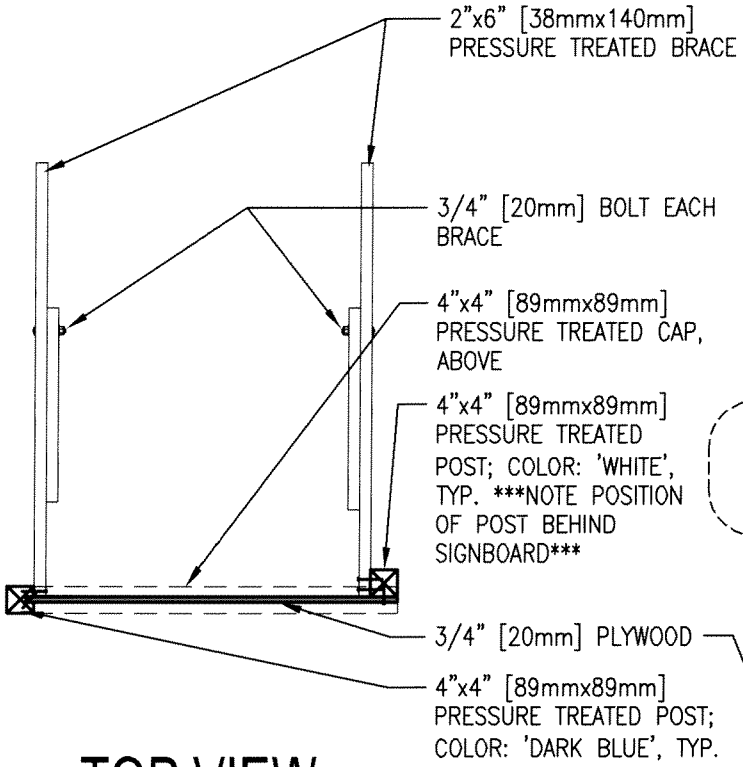

A 1,2 3 **TOP VIEW**

SCALE: 1/2" = 1'-0"

NOTES:

1. POSTS AND BRACES SHALL BE PRESSURE TREATED.
2. ALL FASTENERS SHALL BE ZINC COATED.
3. BRACING IS REQUIRED IN ALL SOIL CONDITIONS AND HIGH WIND ENVIRONMENTS.

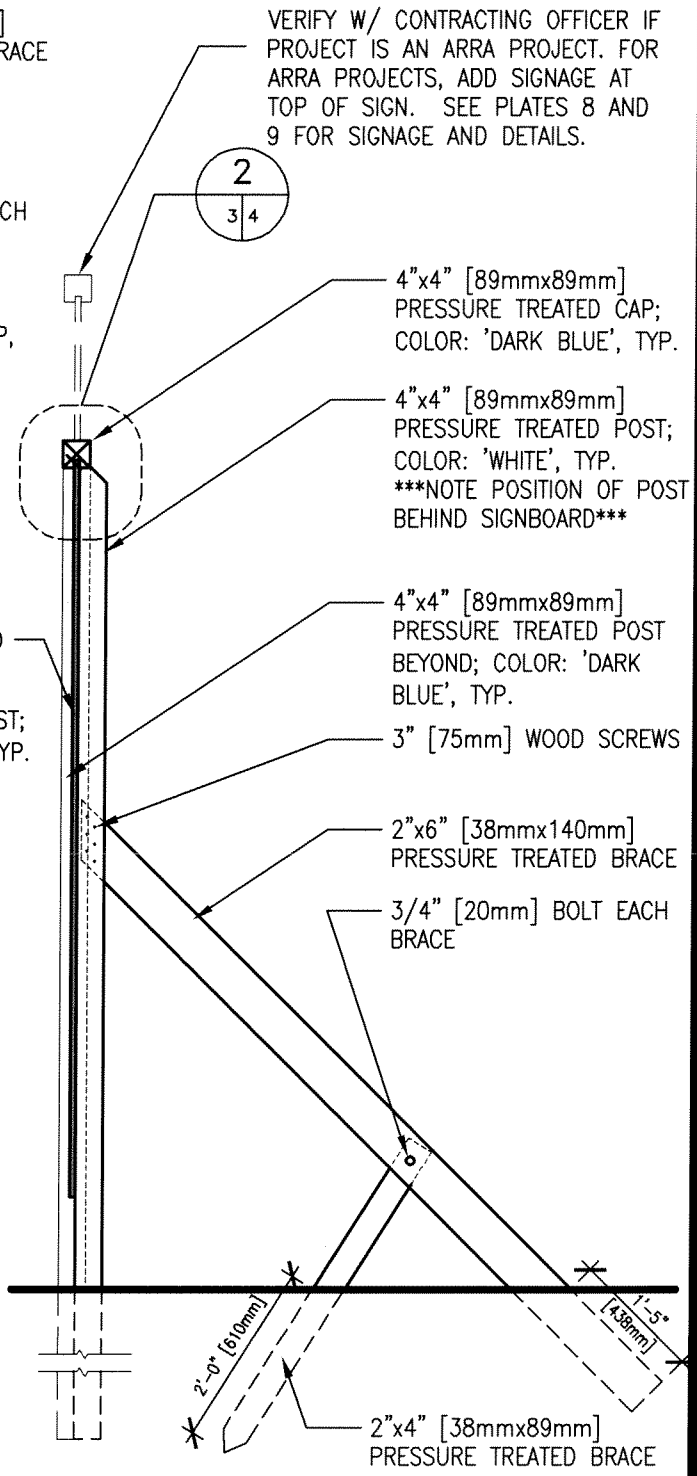

B 1,2 3 **SIDE VIEW**

SCALE: 1/2" = 1'-0"

PROJECT IDENTIFICATION SIGNBOARD SUPPORT DETAILS

PLATE 3

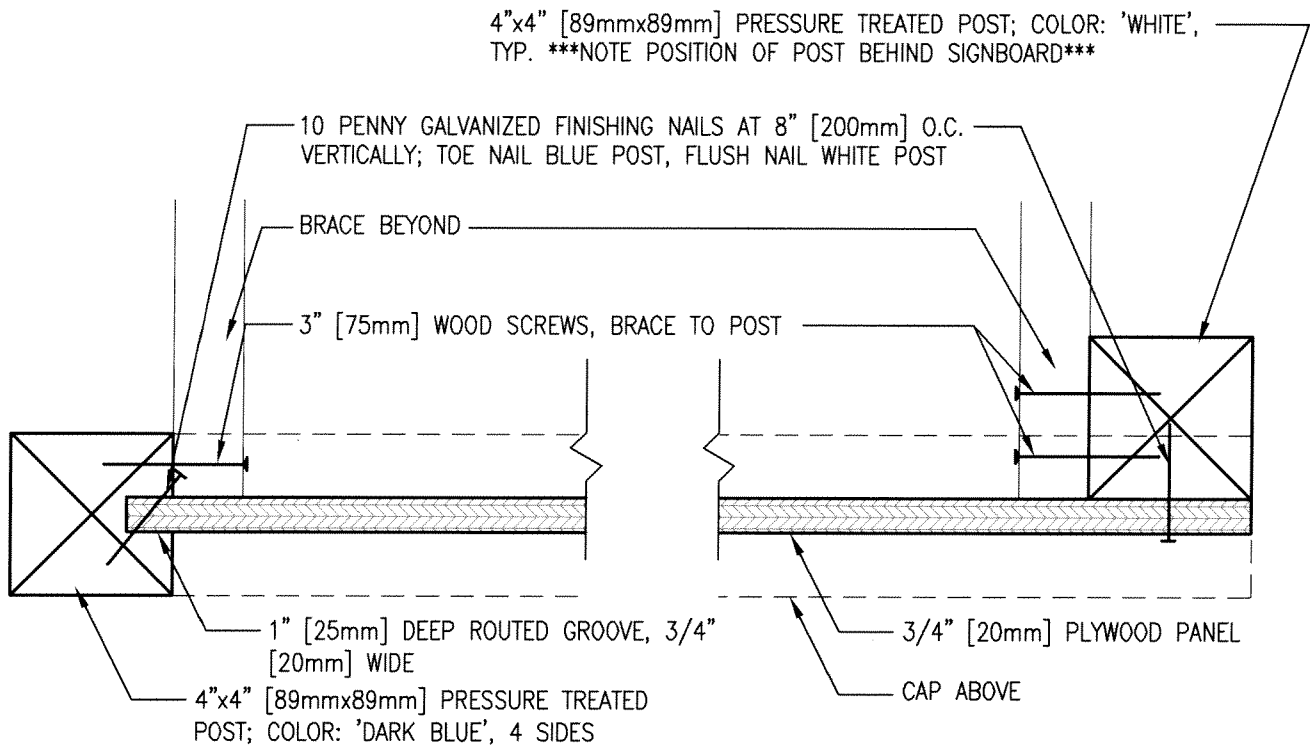

1 PLAN SECTION

1,2 | 4

SCALE: 3" = 1'-0"

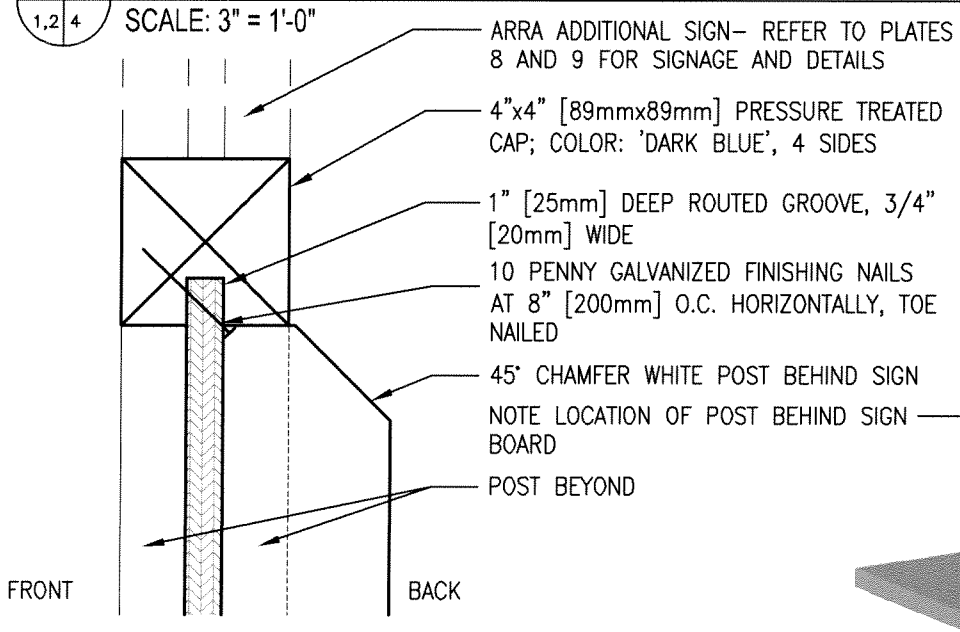

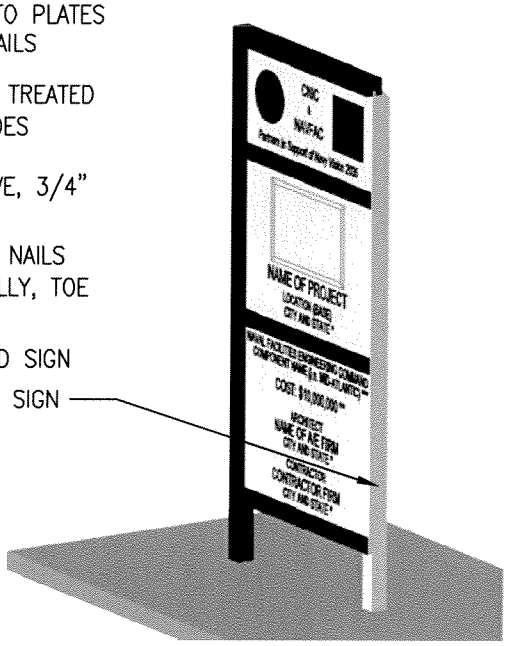

2 SECTION AT TOP

1,2 | 4

SCALE: 3" = 1'-0"

3 ISO VIEW

2 | 4

SCALE: NONE

PROJECT IDENTIFICATION SIGNBOARD SECTIONS

PLATE 4

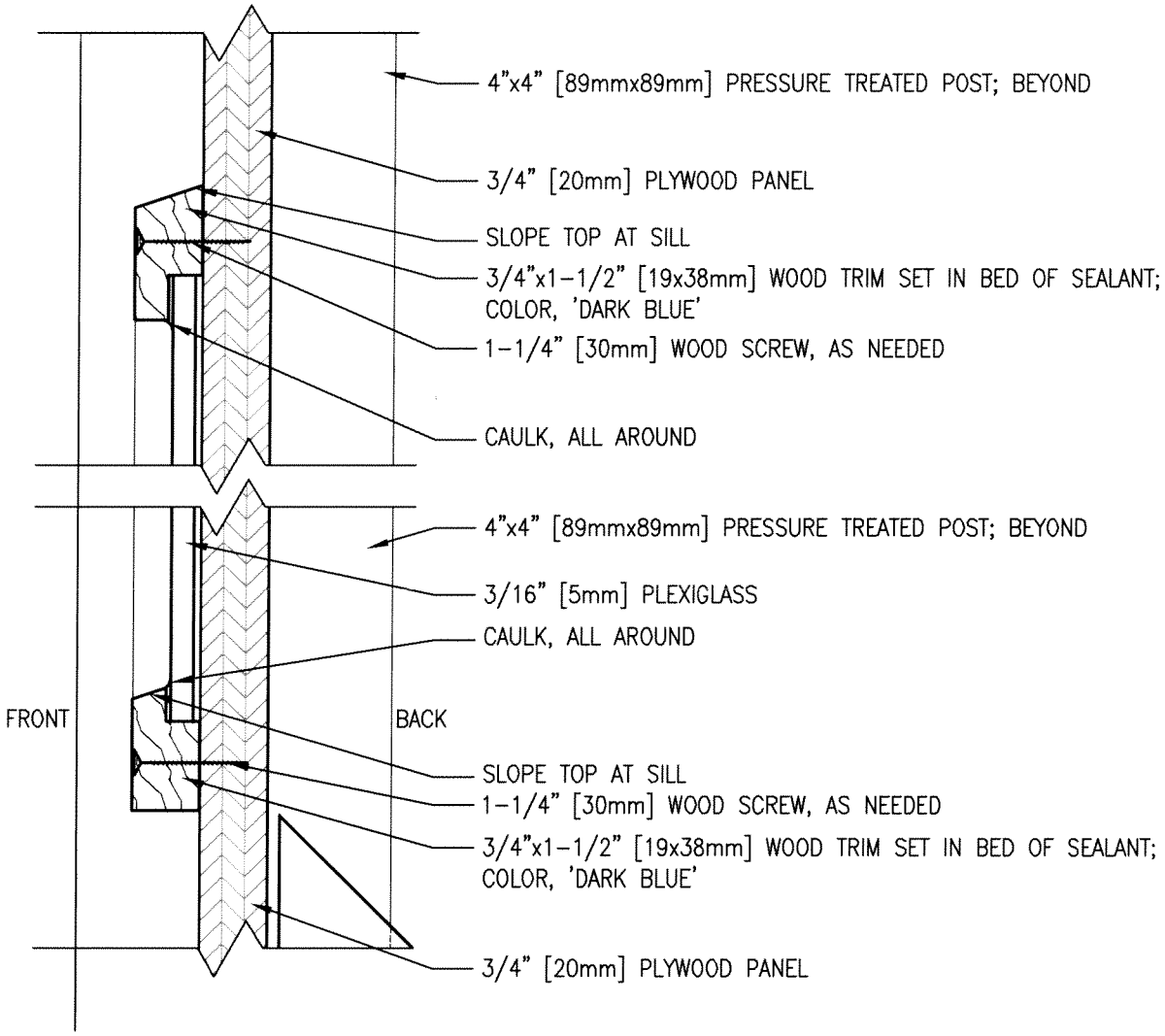

3 / 2 5

SECTION AT RENDERING FRAME

SCALE: 6" = 1'-0"

PROJECT IDENTIFICATION SIGNBOARD SECTION

PLATE 5

SECTION 01 57 19.00 20

TEMPORARY ENVIRONMENTAL CONTROLS
01/08

PART 1 GENERAL

1.1 REFERENCES

The publications listed below form a part of this specification to the extent referenced. The publications are referred to within the text by the basic designation only.

U.S. DEPARTMENT OF DEFENSE (DOD) UNIFIED FACILITIES CRITERIA (UFC)

UFC 3-200-10N	Civil Engineering

U.S. ENVIRONMENTAL PROTECTION AGENCY (EPA)

EPA 530/F-93/004	(1993; Rev O; Updates I, II, IIA, IIB, and III) Test Methods for Evaluating Solid Waste (Vol IA, IB, IC, and II) (SW-846)
EPA 833-R-060-04	(2000) Developing Your Storm Water Pollution Prevention Plan, A Guide for Construction Sites

U.S. NATIONAL ARCHIVES AND RECORDS ADMINISTRATION (NARA)

29 CFR 1910	Occupational Safety and Health Standards
29 CFR 1910.120	Hazardous Waste Operations and Emergency Response
40 CFR 82	Protection of Stratospheric Ozone
40 CFR 112	Oil Pollution Prevention
40 CFR 122.26	Storm Water Discharges (Applicable to State NPDES Programs, see section 40 CFR 123.25)
40 CFR 241	Guidelines for Disposal of Solid Waste
40 CFR 243	Guidelines for the Storage and Collection of Residential, Commercial, and Institutional Solid Waste
40 CFR 258	Subtitle D Landfill Requirements

40 CFR 260	Hazardous Waste Management System: General
40 CFR 261	Identification and Listing of Hazardous Waste
40 CFR 262	Standards Applicable to Generators of Hazardous Waste
40 CFR 263	Standards Applicable to Transporters of Hazardous Waste
40 CFR 264	Standards for Owners and Operators of Hazardous Waste Treatment, Storage, and Disposal Facilities
40 CFR 265	Interim Status Standards for Owners and Operators of Hazardous Waste Treatment, Storage, and Disposal Facilities
40 CFR 266	Standards for the Management of Specific Hazardous Wastes and Specific Types of Hazardous Waste Management Facilities
40 CFR 268	Land Disposal Restrictions
40 CFR 270	EPA Administered Permit Programs: The Hazardous Waste Permit Program
40 CFR 271	Requirements for Authorization of State Hazardous Waste Programs
40 CFR 272	Approved State Hazardous Waste Management Programs
40 CFR 273	Standards For Universal Waste Management
40 CFR 279	Standards for the Management of Used Oil
40 CFR 300	National Oil and Hazardous Substances Pollution Contingency Plan
40 CFR 355	Emergency Planning and Notification
40 CFR 372-SUBPART D	Specific Toxic Chemical Listings
40 CFR 761	Polychlorinated Biphenyls (PCBs) Manufacturing, Processing, Distribution in Commerce, and Use Prohibitions
49 CFR 171	General Information, Regulations, and Definitions
49 CFR 172	Hazardous Materials Table, Special

	Provisions, Hazardous Materials Communications, Emergency Response Information, and Training Requirements
49 CFR 173	Shippers - General Requirements for Shipments and Packaging
49 CFR 178	Specifications for Packaging

1.2 DEFINITIONS

1.2.1 Sediment

Soil and other debris that have eroded and have been transported by runoff water or wind.

1.2.2 Solid Waste

Garbage, refuse, debris, sludge, or other discharged material, including solid, liquid, semisolid, or contained gaseous materials resulting from domestic, industrial, commercial, mining, or agricultural operations. Types of solid waste typically generated at construction sites may include:

a. Green waste: The vegetative matter from landscaping, land clearing and grubbing, including, but not limited to, grass, bushes, scrubs, small trees and saplings, tree stumps and plant roots. Marketable trees, grasses and plants that are indicated to remain, be re-located, or be re-used are not included.

b. Surplus soil: Existing soil that is in excess of what is required for this work, including aggregates intended, but not used, for on-site mixing of concrete, mortars and paving. Contaminated soil meeting the definition of hazardous material or hazardous waste is not included.

c. Debris: Non-hazardous solid material generated during the construction, demolition, or renovation of a structure which exceeds 60 mm(2.5 inch) (2.5 inch) particle size that is: a manufactured object; plant or animal matter; or natural geologic material (e.g. cobbles and boulders), broken or removed concrete, masonry, and rock asphalt paving; ceramics; roofing paper and shingles. Inert materials may be reinforced with or contain ferrous wire, rods, accessories and weldments. A mixture of debris and other material such as soil or sludge is also subject to regulation as debris if the mixture is comprised primarily of debris by volume, based on visual inspection.

d. Wood: Dimension and non-dimension lumber, plywood, chipboard, hardboard. Treated and/or painted wood that meets the definition of lead contaminated or lead based contaminated paint is not included.

e. Scrap metal: Scrap and excess ferrous and non-ferrous metals such as reinforcing steel, structural shapes, pipe and wire that are recovered or collected and disposed of as scrap. Scrap metal meeting the definition of hazardous material or hazardous waste is not included.

f. Paint cans: Metal cans that are empty of paints, solvents,

thinners and adhesives. If permitted by the paint can label, a thin dry film may remain in the can.

g. Recyclables: Materials, equipment and assemblies such as doors, windows, door and window frames, plumbing fixtures, glazing and mirrors that are recovered and sold as recyclable. Metal meeting the definition of lead contaminated or lead based paint contaminated may not be included as recyclable if sold to a scrap metal company. Paint cans may be included as recyclable if sold to a scrap metal company.

h. Hazardous Waste: By definition, to be a hazardous waste a material must first meet the definition of a solid waste. Hazardous waste and hazardous debris are special cases of solid waste. They have additional regulatory controls and must be handled separately. They are thus defined separately in this document.

Material not regulated as solid waste are: nuclear source or byproduct materials regulated under the Federal Atomic Energy Act of 1954 as amended; suspended or dissolved materials in domestic sewage effluent or irrigation return flows, or other regulated point source discharges; regulated air emissions; and fluids or wastes associated with natural gas or crude oil exploration or production.

1.2.3 Hazardous Debris

As defined in Solid Waste paragraph, debris that contains listed hazardous waste (either on the debris surface, or in its interstices, such as pore structure) per 40 CFR 261; or debris that exhibits a characteristic of hazardous waste per 40 CFR 261.

1.2.4 Chemical Wastes

This includes salts, acids, alkalizes, herbicides, pesticides, and organic chemicals.

1.2.5 Garbage

Refuse and scraps resulting from preparation, cooking, dispensing, and consumption of food.

1.2.6 Hazardous Waste

Any discarded material, liquid, solid, or gas, which meets the definition of hazardous material or is designated hazardous waste by the Environmental Protection Agency or State Hazardous Control Authority as defined in 40 CFR 260, 40 CFR 261, 40 CFR 262, 40 CFR 263, 40 CFR 264, 40 CFR 265, 40 CFR 266, 40 CFR 268, 40 CFR 270, 40 CFR 271, 40 CFR 272, 40 CFR 273, 40 CFR 279, and 40 CFR 280.

1.2.7 Hazardous Materials

Hazardous materials as defined in 49 CFR 171 and listed in 49 CFR 172.

Hazardous material is any material that:

a. Is regulated as a hazardous material per 49 CFR 173, or

b. Requires a Material Safety Data Sheet (MSDS) per 29 CFR 1910.120,

or

c. During end use, treatment, handling, packaging, storage, transpiration, or disposal meets or has components that meet or have potential to meet the definition of a hazardous waste as defined by 40 CFR 261 Subparts A, B, C, or D.

Designation of a material by this definition, when separately regulated or controlled by other instructions or directives, does not eliminate the need for adherence to that hazard-specific guidance which takes precedence over this instruction for "control" purposes. Such material include ammunition, weapons, explosive actuated devices, propellants, pyrotechnics, chemical and biological warfare materials, medical and pharmaceutical supplies, medical waste and infectious materials, bulk fuels, radioactive materials, and other materials such as asbestos, mercury, and polychlorinated biphenyls (PCBs). Nonetheless, the exposure may occur incident to manufacture, storage, use and demilitarization of these items.

1.2.8 Waste Hazardous Material (WHM)

Any waste material which because of its quantity, concentration, or physical, chemical, or infectious characteristics may pose a substantial hazard to human health or the environment and which has been so designated. Used oil not containing any hazardous waste, as defined above, falls under this definition.

1.2.9 Oily Waste

Those materials which are, or were, mixed with used oil and have become separated from that used oil. Oily wastes also means materials, including wastewaters, centrifuge solids, filter residues or sludges, bottom sediments, tank bottoms, and sorbents which have come into contact with and have been contaminated by, used oil and may be appropriately tested and discarded in a manner which is in compliance with other State and local requirements.

This definition includes materials such as oily rags, "kitty litter" sorbent clay and organic sorbent material. These materials may be land filled provided that:

a. It is not prohibited in other State regulations or local ordinances

b. The amount generated is "de minimus" (a small amount)

c. It is the result of minor leaks or spills resulting from normal process operations

d. All free-flowing oil has been removed to the practical extent possible

Large quantities of this material, generated as a result of a major spill or in lieu of proper maintenance of the processing equipment, are a solid waste. As a solid waste, a hazardous waste determination must be performed prior to disposal. As this can be an expensive process, it is recommended that this type of waste be minimized through good housekeeping practices and employee education.

1.2.10 Regulated Waste

Those solid waste that have specific additional Federal, state, or local controls for handling, storage, or disposal.

1.2.11 Class I Ozone Depleting Substance (ODS)

Class I ODS is defined in Section 602(a) of The Clean Air Act and includes the following chemicals:

chlorofluorocarbon-11 (CFC-11)
chlorofluorocarbon-12 (CFC-12)
chlorofluorocarbon-13 (CFC-13)
chlorofluorocarbon-111 (CFC-111)
chlorofluorocarbon-112 (CFC-112)
chlorofluorocarbon-113 (CFC-113)
chlorofluorocarbon-114 (CFC-114) chlorofluorocarbon-115 (CFC-115)
chlorofluorocarbon-211 (CFC-211)
chlorofluorocarbon-212 (CFC-212) methyl bromide
chlorofluorocarbon-213 (CFC-213)
chlorofluorocarbon-214 (CFC-214)
chlorofluorocarbon-215 (CFC-215)
chlorofluorocarbon-216 (CFC-216)
chlorofluorocarbon-217 (CFC-217)
chlorofluorocarbon-500 (CFC-500)
chlorofluorocarbon-502 (CFC-502)
chlorofluorocarbon-503 (CFC-503)
halon-1211
halon-1301
halon-2402
carbon tetrachloride
methyl bromide
methyl chloroform

Class II ODS is defined in Section 602(s) of The Clean Air Act and includes the following chemicals:

hydrochlorofluorocarbon-21 (HCFC-21)
hydrochlorofluorocarbon-22 (HCFC-22)
hydrochlorofluorocarbon-31 (HCFC-31)
hydrochlorofluorocarbon-121 (HCFC-121)
hydrochlorofluorocarbon-122 (HCFC-122)
hydrochlorofluorocarbon-123 (HCFC-123)
hydrochlorofluorocarbon-124 (HCFC-124)
hydrochlorofluorocarbon-131 (HCFC-131)
hydrochlorofluorocarbon-132 (HCFC-132)
hydrochlorofluorocarbon-133 (HCFC-133)
hydrochlorofluorocarbon-141 (HCFC-141)
hydrochlorofluorocarbon-142 (HCFC-142)
hydrochlorofluorocarbon-221 (HCFC-221)
hydrochlorofluorocarbon-222 (HCFC-222)
hydrochlorofluorocarbon-223 (HCFC-223)
hydrochlorofluorocarbon-224 (HCFC-224)
hydrochlorofluorocarbon-225 (HCFC-225)
hydrochlorofluorocarbon-226 (HCFC-226)
hydrochlorofluorocarbon-231 (HCFC-231)
hydrochlorofluorocarbon-232 (HCFC-232)
hydrochlorofluorocarbon-233 (HCFC-233)
hydrochlorofluorocarbon-234 (HCFC-234)
hydrochlorofluorocarbon-235 (HCFC-235)
hydrochlorofluorocarbon-241 (HCFC-241)
hydrochlorofluorocarbon-242 (HCFC-242)
hydrochlorofluorocarbon-243 (HCFC-243)
hydrochlorofluorocarbon-244 (HCFC-244)
hydrochlorofluorocarbon-251 (HCFC-251)

hydrochlorofluorocarbon-252 (HCFC-252)
hydrochlorofluorocarbon-253 (HCFC-253)
hydrochlorofluorocarbon-261 (HCFC-261)
hydrochlorofluorocarbon-262 (HCFC-262)
hydrochlorofluorocarbon-271 (HCFC-271)

1.2.11.1 Universal Waste

The universal waste regulations streamline collection requirements for certain hazardous wastes in the following categories: batteries, pesticides, mercury-containing equipment (e.g., thermostats) and lamps (e.g., fluorescent bulbs). The rule is designed to reduce hazardous waste in the municipal solid waste (MSW) stream by making it easier for universal waste handlers to collect these items and send them for recycling or proper disposal. These regulations can be found at 40 CFR 273.

1.3 SUBMITTALS

Government approval is required for submittals with a "G" designation; submittals not having a "G" designation are for Contractor Quality Control approval. When used, a designation following the "G" designation identifies the office that will review the submittal for the Government. The following shall be submitted in accordance with Section 01 33 00 Submittal Procedures:

SD-01 Preconstruction Submittals

Preconstruction Survey; G

Environmental Management Plan; G

Solid Waste Management Plan and Permit; G

Regulatory Notifications; G

Storm Water Pollution Prevention Plan; G

Storm Water Notice of Intent (for NPDES coverage under the general permit for construction activities); G

Contractor Hazardous Material Inventory Log; G

ECATTS certificate of completion; G

SD-06 Test Reports

Laboratory Analysis

Disposal Requirements

Erosion and Sediment Control Inspection Reports

Storm Water Inspection Reports for General Permit

Contractor 40 CFR employee training records

Solid Waste Management Report; G

SD-11 Closeout Submittals

Some of the records listed below are also required as part of other submittals. For the "Records" submittal, maintain on-site a separate three-ring Environmental Records binder and submit at the completion of the project. Make separate parts to the binder corresponding to each of the applicable sub items listed below.

Storm water pollution prevention plan compliance notebook; G

Waste Determination Documentation

Disposal Documentation for Hazardous and Regulated Waste

Contractor 40 CFR Employee Training Records

Solid Waste Management Report

Contractor Hazardous Material Inventory Log; G

Hazardous Waste/Debris Management

Regulatory Notifications

1.4 ENVIRONMENTAL PROTECTION REQUIREMENTS

Provide and maintain, during the life of the contract, environmental protection as defined. Plan for and provide environmental protective measures to control pollution that develops during normal construction practice. Plan for and provide environmental protective measures required to correct conditions that develop during the construction of permanent or temporary environmental features associated with the project. Comply with Federal, State, and local regulations pertaining to the environment, including water, air, solid waste, hazardous waste and substances, oily substances, and noise pollution.

The Contractor may be required to promptly conduct tests and procedures for the purpose of assessing whether construction operations are in compliance with Applicable Environmental Laws. Analytical work shall be done by qualified laboratories; and where required by law, the laboratories shall be certified.

1.4.1 Environmental Compliance Assessment Training and Tracking System

The QC Manager is responsible for environmental compliance on projects unless an Environmental Manager is named. The QC Manager (and Alternate QC Manager) or Environmental Manager shall complete ECATTS Training prior to starting respective portions of on-site work under this contract. If personnel changes occur for any of these positions after starting work, replacement personnel shall complete ECATTS training within 14 days of assignment to the project.

Submit an ECATTS certificate of completion for personnel who have completed the required "Environmental Compliance Assessment Training and Tracking System (ECATTS)" training. This training is web-based and can be accessed from any computer with Internet access using the following instructions.

Register for NAVFAC Environmental Compliance Assessment Training and Tracking System, by logging on to http://navfac.ecatts.com/ . Obtain the password for registration from the Contracting Officer.

This training has been structured to allow contractor personnel to receive credit under this contract and also to carry forward credit to future

contracts. Contractors shall ensure that the QC Manager (and Alternate QC Manager) or Environmental Manager review their training plans for new modules or updated training requirements prior to beginning work. Some training modules are tailored for specific State regulatory requirements, therefore, Contractors working in multiple states will be required to re-take modules tailored to the state where the contract work is being performed.

ECATTS is available for use by all contractor and subcontractor personnel associated with this project. These other personnel are encouraged (but not required) to take the training and may do so at their discretion.

1.4.2 Conformance with the Environmental Management System

The Contractor shall perform work under this contract consistent with the policy and objectives identified in the installation's Environmental Management System (EMS). The Contractor shall perform work in a manner that conforms to objectives and targets, environmental programs and operational controls identified by the EMS. The Contractor will provide monitoring and measurement information as necessary to address environmental performance relative to environmental, energy, and transportation management goals. In the event an EMS nonconformance or environmental noncompliance associated with the contracted services, tasks, or actions occurs, the Contractor shall take corrective and/or preventative actions. In addition, the Contractor shall ensure that its employees are aware of their roles and responsibilities under the EMS and how these EMS roles and responsibilities affect work performed under the contract.

The Contractor is responsible for ensuring that their employees receive applicable environmental and occupational health and safety training, and keep up to date on regulatory required specific training for the type of work to be conducted onsite. All on-site Contractor personnel, and their subcontractor personnel, performing tasks that have the potential to cause a significant environmental impact shall be competent on the basis of appropriate education, training or experience. Upon contract award, the Contracting Officer's Representative will notify the installation's EMS coordinator to arrange EMS training. Refer to Section 01 57 19.01 20, Supplemental Temporary Environmental Controls for additional site specific EMS requirements related to construction. The installation's EMS coordinator shall identify training needs associated with environmental aspects and the EMS coordinator shall identify training needs associated with environmental aspects and the EMS, and arrange training or take other action to meet these needs. The Contractor shall provide training documentation to the contracting Officer. The installations EMS coordinator shall retain associated records.

1.5 QUALITY ASSURANCE

1.5.1 Preconstruction Survey

Perform a Preconstruction Survey of the project site with the Contracting Officer, and take photographs showing existing environmental conditions in and adjacent to the site. Submit a report for the record.

1.5.2 Regulatory Notifications

The Contractor is responsible for all regulatory notification requirements in accordance with Federal, State and local regulations. In cases where the Navy must also provide public notification (such as storm water permitting), the Contractor must coordinate with the Contracting Officer. The Contractor shall submit copies of all regulatory notifications to the Contracting Officer prior to commencement of work activities. Typically, regulatory notifications must be provided for the following (this listing

is not all inclusive): demolition, renovation, NPDES defined site work, remediation of controlled substances (asbestos, hazardous waste, lead paint).

1.5.3 Environmental Brief

Attend an environmental brief to be included in the preconstruction meeting. Provide the following information: types, quantities, and use of hazardous materials that will be brought onto the activity; types and quantities of wastes/wastewater that may be generated during the contract. Discuss the results of the Preconstruction Survey at this time.

Prior to initiating any work on site, meet with the Contracting Officer and activity environmental staff to discuss the proposed Environmental Management Plan. Develop a mutual understanding relative to the details of environmental protection, including measures for protecting natural resources, required reports, required permits, permit requirements, and other measures to be taken.

1.5.4 Environmental Manager

Appoint in writing an Environmental Manager for the project site. The Environmental Manager will be directly responsible for coordinating contractor compliance with Federal, State, local, and station requirements.

The Environmental Manager will ensure compliance with Hazardous Waste Program requirements (including hazardous waste handling, storage, manifesting, and disposal); implement the Environmental Management Plan; ensure that all environmental permits are obtained, maintained, and closed out; ensure compliance with Storm Water Program Management requirements; ensure compliance with Hazardous Materials (storage, handling, and reporting) requirements; and coordinate any remediation of regulated substances (lead, asbestos, PCB transformers).

This can be a collateral position; however the person in this position must be trained to adequately accomplish the following duties: ensure waste segregation and storage compatibility requirements are met; inspect and manage Satellite Accumulation areas; ensure only authorized personnel add wastes to containers; ensure all Contractor personnel are trained in 40 CFR requirements in accordance with their position requirements; coordinate removal of waste containers; and maintain the Environmental Records binder and required documentation, including environmental permits compliance and close-out.

1.5.5 Contractor 40 CFR Employee Training Records

Prepare and maintain employee training records throughout the term of the contract meeting applicable 40 CFR requirements. The Contractor will ensure every employee completes a program of classroom instruction or on-the-job training that teaches them to perform their duties in a way that ensures compliance with Federal, State and local regulatory requirements for RCRA Large Quantity Generator. The Contractor will provide a Position Description for each employee, by subcontractor, based on the Davis-Bacon Wage Rate designation or other equivalent method, evaluating the employee's association with hazardous and regulated wastes. This Position Description will include training requirements as defined in 40 CFR 265 for a Large Quantity Generator facility. Submit these training records to the Contracting Officer at the conclusion of the project, unless otherwise directed.

PART 2 PRODUCTS

Not used.

PART 3 EXECUTION

3.1 ENVIRONMENTAL MANAGEMENT PLAN

Prior to initiating any work on site, the Contractor will meet with the Contracting Officer to discuss the proposed Environmental Management Plan and develop a mutual understanding relative to the details of environmental protection, including measures for protecting natural resources, required reports, and other measures to be taken. The Contractor's Environmental Management Plan shall incorporate construction related objectives and targets from the installation’s Environmental Management System. The Environmental Management Plan will be submitted in the following format and shall include the elements specified below.

a. Description of the Environmental Management Plan

(1) General overview and purpose

(a) A brief description of each specific plan required by environmental permit or elsewhere in this contract. The Permit Record of decision (PROD) form found in UFC 3-200-10N may be used to help accomplish this task.

(b) The duties and level of authority assigned to the person(s) on the job site that oversee environmental compliance.

(c) A copy of any standard or project specific operating procedures that will be used to effectively manage and protect the environment on the project site.

(d) Communication and training procedures that will be used to convey environmental management requirements to contractor employees and subcontractors.

(e) Emergency contact information contact information (office phone number, cell phone number, and e-mail address).

(2) General site information

(3) **A letter signed by an officer of the firm appointing the Environmental Manager and stating that he/she is responsible for managing and implementing the Environmental Program as described in this contract. Include in this letter the Environmental Manager's authority to direct the removal and replacement of non-conforming work.**

b. Management of Natural Resources

(1) Land resources

(2) Tree protection

(3) Replacement of damaged landscape features

(4) Temporary construction

(5) Stream crossings

(6) Fish and wildlife resources

(7) Wetland areas

c. Protection of Historical and Archaeological Resources

(1) Objectives

(2) Methods

d. Storm Water Management and Control

(1) Ground cover

(2) Erodible soils

(3) Temporary measures

(a) Mechanical retardation and control of runoff

(b) Vegetation and mulch

(4) Effective selection, implementation and maintenance of Best Management Practices (BMPs).

e. Protection of the Environment from Waste Derived from Contractor Operations

(1) Control and disposal of solid and sanitary waste. If Section 01 74 19.05 20 is included in the contract, submit the plan required by that section as part of the Environmental Management Plan.

(2) Control and disposal of hazardous waste (Hazardous Waste Management Section)

This item will consist of the management procedures for all hazardous waste to be generated. The elements of those procedures will coincide with the Activity Hazardous Waste Management Plan. A copy of the Activity Hazardous Waste Management Plan will be provided by the Contracting Officer. As a minimum, include the following:

(a) Procedures to be employed to ensure a written waste determination is made for appropriate wastes which are to be generated;

(b) Sampling/analysis plan;

(c) Methods of hazardous waste accumulation/storage (i.e., in tanks and/or containers);

(d) Management procedures for storage, labeling, transportation, and disposal of waste (treatment of waste is not allowed unless specifically noted);

(e) Management procedures and regulatory documentation ensuring disposal of hazardous waste complies with Land Disposal Restrictions (40 CFR 268);

(f) Management procedures for recyclable hazardous materials such as lead-acid batteries, used oil, and the like;

(g) Used oil management procedures in accordance with 40 CFR 279;

(h) Pollution prevention/hazardous waste minimization

procedures;

(i) Plans for the disposal of hazardous waste by permitted facilities;

(j) Procedures to be employed to ensure all required employee training records are maintained.

f. Prevention of Releases to the Environment

(1) Procedures to prevent releases to the environment

(2) Notifications in the event of a release to the environment

g. Regulatory Notification and Permits

(1) List what notifications and permit applications must be made. Demonstrate that those permits have been obtained by including copies of all applicable, environmental permits. Be aware that some permits required under the Environmental Management Plan require up to 30 days advance regulator notice before site work may begin.

3.1.1 Environmental Management Plan Review

Within thirty days after the Contract award date, submit the proposed Environmental Management Plan for further discussion, review, and approval. Commencement of work will not begin until the environmental management plan has been approved.

3.1.2 Licenses and Permits

For permits obtained by the Contracting Officer, whether or not required by the permit, the Contractor is responsible for conforming to all permit requirements and performing all quality control inspections of the work in progress, and to submit notifications and certifications to the applicable regulatory agency via the Contracting Officer.

Where required by the State regulatory authority, the inspections and certifications will be provided through the services of a Professional Engineer (PE), registered in the State where the work is being performed. [Where a PE is not required, the individual must be otherwise qualified by other current State licensure, specific training and prior experience (minimum 5 years).]As a part of the quality control plan, which is required to be submitted for approval by the quality control section, provide a sub item containing the name, appropriate professional registration or license number, address, and telephone number of the professionals or other qualified persons who will be performing the inspections and certifications for each permit.]

3.2 PROTECTION OF NATURAL RESOURCES

Preserve the natural resources within the project boundaries and outside the limits of permanent work. Restore to an equivalent or improved condition upon completion of work. Confine construction activities to within the limits of the work indicated or specified. If the work is near streams, lakes, or other waterways, conform to the national permitting requirements of the Clean Water Act.

Do not disturb fish and wildlife. Do not alter water flows or otherwise

significantly disturb the native habitat adjacent to the project and critical to the survival of fish and wildlife, except as indicated or specified.

Except in areas to be cleared, do not remove, cut, deface, injure, or destroy trees or shrubs without the Contracting Officer's permission. Do not fasten or attach ropes, cables, or guys to existing nearby trees for anchorages unless authorized by the Contracting Officer. Where such use of attached ropes, cables, or guys is authorized, the Contractor will be responsible for any resultant damage.

Protect existing trees which are to remain and which may be injured, bruised, defaced, or otherwise damaged by construction operations. Remove displaced rocks from uncleared areas. By approved excavation, remove trees with 30 percent or more of their root systems destroyed. Remove trees and other landscape features scarred or damaged by equipment operations, and replace with equivalent, undamaged trees and landscape features. Obtain Contracting Officer's approval before replacement.

The Contracting Officer's approval is required before any equipment will be permitted to ford live streams. In areas where frequent crossings are required, install temporary culverts or bridges. Obtain Contracting Officer's approval prior to installation. Remove temporary culverts or bridges upon completion of work, and repair the area to its original condition unless otherwise required by the Contracting Officer.

3.2.1 Erosion and Sediment Control Measures

3.2.1.1 Burnoff

Burnoff of the ground cover is not permitted.

3.2.1.2 Protection of Erodible Soils

Immediately finish the earthwork brought to a final grade, as indicated or specified. Immediately protect the side slopes and back slopes upon completion of rough grading. Plan and conduct earthwork to minimize the duration of exposure of unprotected soils.

3.2.1.3 Temporary Protection of Erodible Soils

Use the following methods to prevent erosion and control sedimentation:

a. Mechanical Retardation and Control of Runoff(1) Mechanically retard and control the rate of runoff from the construction site. This includes construction of diversion ditches, benches, berms, and use of silt fences and straw bales to retard and divert runoff to protected drainage courses.

b. Sediment Basins

(1) Trap sediment in temporary sediment basins. Select a basin size to accommodate the runoff. Pump dry and remove the accumulated sediment, after each storm. Use a paved weir or vertical overflow pipe for overflow. Remove collected sediment from the site. Institute effluent quality monitoring programs. 2) Install, inspect, and maintain best management practices (BMPs) as required by the general permit. Prepare BMP Inspection Reports as required by the general permit. If required by the permit, include those inspection reports.

c. Vegetation and Mulch

(1) Provide temporary protection on sides and back slopes as soon as rough grading is completed or sufficient soil is exposed to require erosion protection. Protect slopes by accelerated growth of permanent vegetation, temporary vegetation, mulching, or netting. Stabilize slopes by hydro-seeding, anchoring mulch in place, covering with anchored netting, sodding, or such combination of these and other methods necessary for effective erosion control.

(2) Seeding: Provide new seeding where ground is disturbed. Include topsoil or nutriment during the seeding operation necessary to establish or reestablish a suitable stand of grass.

3.2.2 Erosion and Sediment Control Inspection Reports

Submit "Erosion and Sediment Control Inspection Reports" (E&S) (form provided at the pre-construction conference) and Storm Water Inspection Reports for General Permit for General Permit to the Contracting Officer once every 7 calendar days and within 24 hours of a storm event that produces 12 mm(0.5 inch) or more of rain.

Note erosion control inspection reports may be compiled as part of a stormwater pollution prevention plan inspection reports if applicable.

3.2.2.1 Storm Water Notice of Intent for Construction Activities and Storm Water Pollution Prevention Plan

The Contractor shall submit a Storm Water Notice of Intent (for NPDES coverage under the general permit for construction activities) and a Storm Water Pollution Prevention Plan (SWPPP) for the project to the Contracting Officer prior and gain approval prior to the commencement of work. The SWPPP will meet the requirements of the EPA or State general permit for storm water discharges from construction sites. Submit the SWPPP along with any required Notice of Intents, Notice of Termination, and appropriate permit fees, via the Contracting Officer, to the appropriate Federal or State agency for approval, a minimum of 45 calendar days prior to the start of any land disturbing activities. The Contractor shall maintain an approved copy of the SWPPP at the construction on-site office, and continually update as regulations require, reflecting current site conditions. Additional requirements may be found in UFGS section 01 57 19.01 20, Supplemental Temporary Environmental Controls.

Coverage under this permit requires the contractor prepare a Storm Water Pollution Prevention Plan (SWPPP), prepare and submit a Registration Statement as a co-permittee with the Construction Officer, and provide the permit fee to the responsible state agency before any land disturbing activities begin. The contractor shall file for permit coverage on behalf Construction Officer and himself and file a Notice of Termination once construction is complete and the site is stabilized with a final sustainable cover.

Under the terms and conditions of the permit, the Contractor may be required to install, inspect, maintain best management practices (BMPs), and submit stormwater BMP inspection reports and stormwater pollution prevention plan inspection reports. The Contractor shall ensure construction operations and management are constantly in compliance with the terms and conditions of the general permit for storm water discharges from construction activities.

1. The SWPPP shall:

a. Identify potential sources of pollution which may be reasonably expected to affect the quality of storm water discharge from the site.

b. Describe and ensure implementation of practices which will be used to reduce the pollutants in storm water discharge from the site.

c. Ensure compliance with terms of the EPA or State general permit for storm water discharge.

d. Select applicable best management practices from EPA 833-R-060-04.

e. Include a completed copy of the Registration Statement, BMP Inspection Report Template and Notice of Termination except for the effective date.

f. Storm Water Pollution Prevention Measures and Notice of Intent 40 CFR 122.26, EPA 833-R-060-04. Provide a "Storm Water Pollution Prevention Plan" (SWPPP) for the project. The SWPPP will meet the requirements of the EPA or State general permit for storm water discharges from construction sites. Submit the SWPPP along with any required Notice of Intents, Notice of Termination, and appropriate permit fees, via the Contracting Officer, to the appropriate Federal or State agency for approval, a minimum of 14 calendar days prior to the start of construction. A copy of the approved SWPPP will be kept at the construction on-site office, and continually updated as regulations require reflecting current site conditions.

3.2.2.2 Storm Water Pollution Prevention Plan Compliance Notebook

The contractor shall create and maintain a three binder of documents that demonstrate compliance with the Stormwater Construction Activity permit. The binder shall include a copy of the permit Registration Statement, proof of permit fee payment, SWPPP and SWPPP update amendments, inspection reports, copies of correspondence with the [list agency that issued the permit i.e. Virginia DCR] and a copy of the permit Notice of Termination. At the completion of the project the folder shall become the property of the Government. The compliance notebook shall be provided to Contracting Officer. An advance copy of the Registration Statement shall be provided to the Contracting Officer immediately after the form is presented to the permitting agency.

3.2.3 Stormwater Drainage and Construction Dewatering

There will be no discharge of excavation ground water to the sanitary sewer, storm drains, or to the river without prior specific authorization of the Environmental Division in writing. Discharge of hazardous substances will not be permitted under any circumstances.

Construction site runoff will be prevented from entering any storm drain or the river directly by the use of straw bales or other method suitable to the Environmental Division. Contractor will provide erosion protection of the surrounding soils.

Construction Dewatering shall not be discharged to the sanitary sewer. If the construction dewatering is noted or suspected of being contaminated, it may only be released to the storm drain system if the discharge is specifically permitted. Authorization for any contaminated groundwater

release shall be obtained in advance from the base Environmental Officer. Discharge of hazardous substances will not be permitted under any circumstances.

3.3 HISTORICAL AND ARCHAEOLOGICAL RESOURCES

Carefully protect in-place and report immediately to the Contracting Officer historical and archaeological items or human skeletal remains discovered in the course of work. Upon discovery, notify the Contracting Officer. Stop work in the immediate area of the discovery until directed by the Contracting Officer to resume work. The Government retains ownership and control over historical and archaeological resources.

3.4 SOLID WASTE MANAGEMENT PLAN AND PERMIT

Provide to the contracting officer written notification of the quantity of solid waste/debris that is anticipated to be generated by construction. Include in the plan the locations where various types of waste will be disposed or recycled. Include letters of acceptance or as applicable, submit one copy of a State and local solid waste management permit or license showing such agency's approval of the disposal plan before transporting wastes off Government property.

3.4.1 Solid Waste Management Report

Monthly, submit a solid waste disposal report to the Contracting Officer. For each waste, the report will state the classification (using the definitions provided in this section), amount, location, and name of the business receiving the solid waste.

The Contractor shall include copies of the waste handling facilities' weight tickets, receipts, bills of sale, and other sales documentation. In lieu of sales documentation, the Contractor may submit a statement indicating the disposal location for the solid waste which is signed by an officer of the Contractor firm authorized to legally obligate or bind the firm. The sales documentation or Contractor certification will include the receiver's tax identification number and business, EPA or State registration number, along with the receiver's delivery and business addresses and telephone numbers.

For each solid waste retained by the Contractor for his own use, the Contractor will submit on the solid waste disposal report the information previously described in this paragraph. Prices paid or received will not be reported to the Contracting Officer unless required by other provisions or specifications of this Contract or public law.

3.4.2 Control and Management of Solid Wastes

Pick up solid wastes, and place in covered containers which are regularly emptied. Do not prepare or cook food on the project site. Prevent contamination of the site or other areas when handling and disposing of wastes. At project completion, leave the areas clean. Recycling is encouraged and can be coordinated with the Contracting Officer and the activity recycling coordinator. Remove all solid waste (including non-hazardous debris) from Government property and dispose off-site at an approved landfill. Solid waste disposal off-site must comply with most stringent local, State, and Federal requirements including 40 CFR 241, 40 CFR 243, and 40 CFR 258.

Manage spent hazardous material used in construction, including but not limited to, aerosol cans, waste paint, cleaning solvents, contaminated brushes, and used rags, as per environmental law.

3.4.2.1 Dumpsters

Equip dumpsters with a secure cover and paint the standard base color. Keep cover closed at all times, except when being loaded with trash and debris. Locate dumpsters behind the construction fence or out of the public view. Empty site dumpsters at least once a week. or as needed to keep the site free of debris and trash. If necessary, provide 208 liter (55 gallon) trash containers painted the darker base color to collect debris in the construction site area. Locate the trash containers behind the construction fence or out of the public view. Empty trash containers at least once a day. For large demolitions, large dumpsters without lids are acceptable but should not have debris higher than the sides before emptying.

3.5 WASTE DETERMINATION DOCUMENTATION

Complete a Waste Determination form (provided at the pre-construction conference) for all contractor derived wastes to be generated. Base the waste determination upon either a constituent listing from the manufacturer used in conjunction with consideration of the process by which the waste was generated, EPA approved analytical data, or laboratory analysis (Material Safety Data Sheets (MSDS) by themselves are not adequate). Attach all support documentation to the Waste Determination form. As a minimum, a Waste Determination form must be provided for the following wastes (this listing is not all inclusive): oil and latex based painting and caulking products, solvents, adhesives, aerosols, petroleum products, and all containers of the original materials.

3.6 CONTRACTOR HAZARDOUS MATERIAL INVENTORY LOG

Submit the "Contractor Hazardous Material Inventory Log"(found at: <URL>http: //www.wbdg.org/ccb/NAVGRAPH/0157n.pdf<URL>), which provides information required by (EPCRA Sections 312 and 313) along with corresponding Material Safety Data Sheets (MSDS) to the Contracting Officer at the start and at the end of construction (30 days from final acceptance), and update no later than January 31 of each calendar year during the life of the contract. Documentation for any spills/releases, environmental reports or off-site transfers may be requested by the Contracting Officer.

3.6.1 Disposal Documentation for Hazardous and Regulated Waste

Manifest, pack, ship and dispose of hazardous or toxic waste and universal waste that is generated as a result of construction in accordance with the generating facilities generator status under the Recourse Conservation and Recovery Act. Contact the Contracting Officer for the facility RCRA identification number that is to be used on each manifest.

Submit a copy of the applicable EPA and or State permit(s), manifest(s), or license(s) for transportation, treatment, storage, and disposal of hazardous and regulated waste by permitted facilities. Hazardous or toxic waste manifest must be reviewed, signed, and approved by the Navy before the Contractor may ship waste. To obtain specific disposal instructions the Contractor must coordinate with the Activity environmental office. Refer to Section 01 57 19.01 20 for the Activity Point of Contact information.

3.7 POLLUTION PREVENTION/HAZARDOUS WASTE MINIMIZATION

Minimize the use of hazardous materials and the generation of hazardous waste. Include procedures for pollution prevention/ hazardous waste minimization in the Hazardous Waste Management Section of the Environmental Management Plan. Consult with the activity Environmental Office for

suggestions and to obtain a copy of the installation's pollution prevention/hazardous waste minimization plan for reference material when preparing this part of the plan. If no written plan exists, obtain information by contacting the Contracting Officer. Describe the types of the hazardous materials expected to be used in the construction when requesting information.

3.8 WHM/HW MATERIALS PROHIBITION

No waste hazardous material or hazardous waste shall be disposed of on government property. No hazardous material shall be brought onto government property that does not directly relate to requirements for the performance of this contract. The government is not responsible for disposal of Contractor's waste material brought on the job site and not required in the performance of this contract.

The intent of this provision is to dispose of that waste identified as waste hazardous material/hazardous waste as defined herein that was generated as part of this contract and existed within the boundary of the Contract limits and not brought in from offsite by the Contractor. Incidental materials used to support the contract including, but not limited to aerosol cans, waste paint, cleaning solvents, contaminated brushes, rags, clothing, etc. are the responsibility of the Contractor.

The list is illustrative rather than inclusive. The Contractor is not authorized to discharge any materials to sanitary sewer, storm drain, or to the river or conduct waste treatment or disposal on government property without written approval of the Contracting Officer.

3.9 HAZARDOUS MATERIAL MANAGEMENT

No hazardous material shall be brought onto government property that does not directly relate to requirements for the performance of this contract.

Include hazardous material control procedures in the Safety Plan. Address procedures and proper handling of hazardous materials, including the appropriate transportation requirements. Submit a MSDS and estimated quantities to be used for each hazardous material to the Contracting Officer prior to bringing the material on base.

Typical materials requiring MSDS and quantity reporting include, but are not limited to, oil and latex based painting and caulking products, solvents, adhesives, aerosol, and petroleum products. At the end of the project, provide the Contracting Officer with the maximum quantity of each material that was present at the site at any one time, the dates the material was present, the amount of each material that was used during the project, and how the material was used.

Ensure that hazardous materials are utilized in a manner that will minimize the amount of hazardous waste that is generated. Ensure that all containers of hazardous materials have NFPA labels or their equivalent. Keep copies of the MSDS for hazardous materials on site at all times and provide them to the Contracting Officer at the end of the project. Certify that all hazardous materials removed from the site are hazardous materials and do not meet the definition of hazardous waste per 40 CFR 261.

3.10 PETROLEUM PRODUCTS AND REFUELING

Conduct the fueling and lubricating of equipment and motor vehicles in a manner that protects against spills and evaporation. Manage all used oil generated on site in accordance with 40 CFR 279. Determine if any used oil generated while on-site exhibits a characteristic of hazardous waste. Used

oil containing 1000 parts per million of solvents will be considered a hazardous waste and disposed of at Contractor's expense. Used oil mixed with a hazardous waste will also be considered a hazardous waste.

3.10.1 Oily and Hazardous Substances

Prevent oil or hazardous substances from entering the ground, drainage areas, or navigable waters. In accordance with 40 CFR 112, surround all temporary fuel oil or petroleum storage tanks with a temporary berm or containment of sufficient size and strength to contain the contents of the tanks, plus 10 percent freeboard for precipitation. The berm will be impervious to oil for 72 hours and be constructed so that any discharge will not permeate, drain, infiltrate, or otherwise escape before cleanup occurs.

3.10.2 Inadvertent Discovery of Petroleum Contaminated Soil or Hazardous Wastes

If petroleum contaminated soil or suspected hazardous waste is found during construction that was not identified in the contract documents, the contractor shall immediately notify the contracting officer. The contractor shall not disturb this material until authorized by the contracting officer.

3.11 FUEL TANKS

Petroleum products and lubricants required to sustain up to 30 days of construction activity may be kept on site. Storage and refilling practices shall comply with 40 CFR Part 112. Secondary containment shall be provided and be no less than 110 percent of the tank volume plus five inches of free-board.

If a secondary berm is used for containment then the berm shall be impervious to oil for 72 hours and be constructed so that any discharge will not permeate, drain, infiltrate, or otherwise escape before cleanup occurs. Drips pans are required and the tanks must be covered during inclement weather.

3.12 RELEASES/SPILLS OF OIL AND HAZARDOUS SUBSTANCES

Exercise due diligence to prevent, contain, and respond to spills of hazardous material, hazardous substances, hazardous waste, sewage, regulated gas, petroleum, lubrication oil, and other substances regulated by environmental law. Maintain spill cleanup equipment and materials at the work site. In the event of a spill, take prompt, effective action to stop, contain, curtail, or otherwise limit the amount, duration, and severity of the spill/release.

In the event of any releases of oil and hazardous substances, chemicals, or gases; immediately (within 15 minutes) notify the Base or Activity Fire Department, the activity's Command Duty Officer, and the Contracting Officer. If the contractor's response is inadequate, the Navy may respond. If this should occur, the contractor will be required to reimburse the government for spill response assistance and analysis.

The Contractor is responsible for verbal and written notifications as required by the federal 40 CFR 355, State, local regulations and Navy Instructions. Spill response will be in accordance with 40 CFR 300 and applicable State and local regulations. Contain and clean up these spills without cost to the Government. If Government assistance is requested or required, the Contractor will reimburse the Government for such assistance. Provide copies of the written notification and documentation that a verbal

notification was made within 20 days.

Maintain spill cleanup equipment and materials at the work site. Clean up all hazardous and non-hazardous (WHM) waste spills. The Contractor shall reimburse the government for all material, equipment, and clothing generated during any spill cleanup. The Contractor shall reimburse the government for all costs incurred including sample analysis materials, equipment, and labor if the government must initiate its own spill cleanup procedures, for Contractor responsible spills, when:

a. The Contractor has not begun spill cleanup procedure within one hour of spill discovery/occurrence, or

b. If, in the government's judgment, the Contractor's spill cleanup is not adequately abating life threatening situation and/or is a threat to any body of water or environmentally sensitive areas.

3.13 CONTROL AND MANAGEMENT OF HAZARDOUS WASTES

3.13.1 Facility Hazardous Waste Generator Status

Contractor provided daily use generator is designated as a Conditionally Exempt-Small Quantity Generator. All work conducted within the boundaries of this activity must meet the regulatory requirements of this generator designation. The Contractor will comply with all provisions of Federal, State and local regulatory requirements applicable to this generator status regarding training and storage, handling, and disposal of all construction derived wastes.

3.13.2 Hazardous Waste/Debris Management

Identify all construction activities which will generate hazardous waste/debris. Provide a documented waste determination for all resultant waste streams. Hazardous waste/debris will be identified, labeled, handled, stored, and disposed of in accordance with all Federal, State, and local regulations including 40 CFR 261, 40 CFR 262, 40 CFR 263, 40 CFR 264, 40 CFR 265, 40 CFR 266, and 40 CFR 268.

Hazardous waste will also be managed in accordance with the approved Hazardous Waste Management Section of the Environmental Management Plan. Store hazardous wastes in approved containers in accordance with 49 CFR 173 and 49 CFR 178. Hazardous waste generated within the confines of Government facilities will be identified as being generated by the Government.

Prior to removal of any hazardous waste from Government property, all hazardous waste manifests must be signed by activity personnel from the Station Environmental Office. No hazardous waste will be brought onto Government property. Provide to the Contracting Officer a copy of waste determination documentation for any solid waste streams that have any potential to be hazardous waste or contain any chemical constituents listed in 40 CFR 372-SUBPART D. For hazardous wastes spills, verbally notify the Contracting Officer immediately.

3.13.2.1 Regulated Waste Storage/Satellite Accumulation/90 Day Storage Areas

If the work requires the temporary storage/collection of regulated or hazardous wastes, the Contractor will request the establishment of a Regulated Waste Storage Area, a Satellite Accumulation Area, or a 90 Day Storage Area at the point of generation. The Contractor must submit a request in writing to the Contracting Officer providing the following

information:

Contract Number	_____	Contractor	_____
Haz/Waste or Regulated Waste POC	_____	Phone Number	_____
Type of Waste	_____	Source of Waste	_____
Emergency POC	_____	Phone Number	_____

Location of the Site: _____
(Attach Site Plan to the Request)

Attach a waste determination form. Allow ten working days for processing this request. The designated area where waste is being stored shall be barricaded and a sign identifying as follows: "DANGER - UNAUTHORIZED PERSONNEL KEEP OUT"

3.13.2.2 Sampling and Analysis of HW

a. Waste Sampling

Sample waste in accordance with EPA 530/F-93/004. Each sampled drum or container will be clearly marked with the Contractor's identification number and cross referenced to the chemical analysis performed.

b. Laboratory Analysis

Follow the analytical procedure and methods in accordance with the 40 CFR 261. The Contractor will provide all analytical results and reports performed to the Contracting Officer

c. Analysis Type

Identify waste hazardous material/hazardous waste by analyzing for the following properties as a minimum: ignitability, corrosiveness, total chlorides, BTU value, PCBs, TCLP for heavy metals, and cyanide.

3.13.2.3 Asbestos Certification

Items, components, or materials disturbed by or included in work under this contract do not involve asbestos. Other materials in the general area around where work will be performed may contain asbestos. All thermal insulation, in all work areas, should be considered to be asbestos unless positively identified by conspicuous tags or previous laboratory analysis certifying them as asbestos free.

Inadvertent discovery of non-disclosed asbestos that will result in an abatement action requires a change in scope before proceeding. Upon discovery of asbestos containing material not identified in the contract documents, the Contractor shall immediately stop all work that would generate further damage to the material, evacuate the asbestos exposed area, and notify the Contracting Officer for resolution of the situation prior to resuming normal work activities in the affected area.

The Contractor will not remove or perform work on any asbestos containing materials without the prior approval of the Contracting Officer. The Contractor will not engage in any activity, which would remove or damage such materials or cause the generation of fibers from such materials.

Asbestos containing waste shall be managed and disposed of in accordance with applicable environmental law. Asbestos containing waste shall be manifested and the manifest provided to the Contracting Officer.

3.13.2.4 Hazardous Waste Disposal

No hazardous, toxic, or universal waste shall be disposed or hazardous material abandoned on government property. And unless otherwise other wise noted in this contract, the government is not responsible for disposal of Contractor generated waste material.

The disposal of incidental materials used to accomplish the work including, but not limited to aerosol cans, waste paint, cleaning solvents, contaminated brushes, rags, clothing, etc. are the responsibility of the Contractor. The list is illustrative rather than inclusive.

The Contractor is not authorized to discharge any materials to sanitary sewer, storm drain, or water way or conduct waste treatment or disposal on government property without written approval of the Contracting Officer.

Control of stored waste, packaging, sampling, analysis, and disposal will be determined by the details in the contract. The requirements for jobs in the following paragraphs will be used as the guidelines for disposal of any hazardous waste generated.

a. Responsibilities for Contractor's Disposal

Contractor responsibilities include any generation of WHM/HW requiring Contractor disposal of solid waste or liquid.

(1) The Contractor agrees to provide all service necessary for the final treatment/disposal of the hazardous material/waste in accordance with all local, State and Federal laws and regulations, and the terms and conditions of the contract within sixty (60) days after the materials have been generated. These services will include all necessary personnel, labor, transportation, packaging, detailed analysis (if required for disposal, and/or transportation, including manifesting or completing waste profile sheets, equipment, and the compilation of all documentation is required).

(2) Contain all waste in accordance with 40 CFR 260, 40 CFR 261, 40 CFR 262, 40 CFR 263, 40 CFR 264, 40 CFR 265, 40 CFR 266, 40 CFR 268, 40 CFR 270, 40 CFR 272, 40 CFR 273, 40 CFR 279, 40 CFR 280, and 40 CFR 761.

(3) Obtaining a representative sample of the material generated for each job done to provide waste stream determination.

(4) Analyzing for each sample taken and providing analytical results to the Contracting Officer. Provide two copies of the results.

(5) Determine the DOT proper shipping names for all waste (each container requiring disposal) and will demonstrate how this determination is developed and supported by the sampling and analysis requirements contained herein to the Contracting Officer.

Contractor Disposal Turn-In Requirements

For any waste hazardous materials or hazardous waste generated which requires the Contractor to dispose of, the following conditions must be

complied with in order to be acceptable for disposal:

(1) Drums compatible with waste contents and drums meet DOT requirements for 49 CFR 173 for transportation of materials.

(2) Drums banded to wooden pallets. No more than three (3) 55 gallon drums to a pallet, or two (2) 85 gallon over packs.

(3) Band using 1-1/4 inch minimum band on upper third of drum.

(4) Recovery materials label located in middle of drum, filled out to indicate actual volume of material, name of material manufacturer, other vendor information as available.

(5) Always have three to five inches of empty space above volume of material. This space is called 'outage'.

3.13.3 Class I and II ODS Prohibition

Class I and II ODS as defined and identified herein will not be used in the performance of this contract, nor be provided as part of the equipment. This prohibition will be considered to prevail over any other provision, specification, drawing, or referenced documents. Regulations related to the protection of stratosphere ozone may be found in 40 CFR 82.

Heating and air conditioning technicians must be certified through an EPA-approved program. Copies of certifications shall be maintained at the employees' place of business and be carried as a wallet card by the technician, as provided by environmental law. Accidental venting of a refrigerant is a release and shall be reported to the Contracting Officer.

3.13.4 Universal Waste/e-Waste Management

Universal waste including but not limited to some mercury containing building products such florescent lamps, mercury vapor lamps, high pressure sodium lamps, CRTs, batteries, aerosol paint containers, electrical equipment containing PCBs, and consumed electronic devices, shall be managed in accordance with applicable environmental law and installation instructions.

3.14 DUST CONTROL

Keep dust down at all times, including during nonworking periods. Sprinkle or treat, with dust suppressants, the soil at the site, haul roads, and other areas disturbed by operations. Dry power brooming will not be permitted. Instead, use vacuuming, wet mopping, wet sweeping, or wet power brooming. Air blowing will be permitted only for cleaning non-particulate debris such as steel reinforcing bars. Only wet cutting will be permitted for cutting concrete blocks, concrete, and bituminous concrete. Do not unnecessarily shake bags of cement, concrete mortar, or plaster.

3.14.1 Dirt and Dust Control Plan

Submit truck and material haul routes along with a plan for controlling dirt, debris, and dust on base roadways. As a minimum, identify in the plan the subcontractor and equipment for cleaning along the haul route and measures to reduce dirt, dust, and debris from roadways.

-- End of Section --

SECTION 01 74 19.05 20

CONSTRUCTION AND DEMOLITION WASTE MANAGEMENT FOR DESIGN-BUILD
06/10

PART 1 GENERAL

1.1 GOVERNMENT POLICY

Government policy is to apply sound environmental principles in the design, construction and use of facilities. As part of the implementation of that policy the Contractor shall: (1) practice efficient waste management when sizing, cutting, and installing products and materials and (2) use all reasonable means to divert construction and demolition waste from landfills and incinerators and to facilitate their recycling or reuse.

1.2 PLAN

A waste management plan shall be submitted within 15 days after notice to proceed and prior to initiating any site preparation work. The plan shall include the following:

a. Name of individuals on the Contractor's staff responsible for waste prevention and management.

b. Actions that will be taken to reduce solid waste generation.

c. Description of the specific approaches to be used in recycling/reuse of the various materials generated, including the areas and equipment to be used for processing, sorting, and temporary storage of wastes.

d. Characterization, including estimated types and quantities, of the waste to be generated.

e. Actions that will be taken to divert at least 50% of the non-hazardous solid wastes (including waste from construction and demolition operations) from the waste stream. Report actual diversion rates during construction and demolition.

f. Name of landfill and/or incinerator to be used and the estimated costs for use, assuming that there would be no salvage or recycling on the project.

g. Identification of local and regional reuse programs, including non-profit organizations such as schools, local housing agencies, and organizations that accept used materials such as materials exchange networks and Habitat for Humanity.

h. List of specific waste materials that will be salvaged for resale, salvaged and reused, or recycled. Recycling facilities that will be used shall be identified. Provide percentage of non-hazardous construction and demolition waste materials that have been diverted from the waste stream.

i. Identification of materials that cannot be recycled/reused with an explanation or justification.

j. Anticipated net cost savings determined by subtracting Contractor program management costs and the cost of disposal from the revenue

generated by sale of the materials and the incineration and/or landfill cost avoidance.

1.3 RECORDS

Records shall be maintained to document the quantity of waste generated; the quantity of waste diverted through sale, reuse, or recycling; and the quantity of waste disposed by landfill or incineration. Report with monthly invoicing the tons diverted, the tons sent to the landfill, cost for each, and the monthly diversion rate. The records shall be made available to the Contracting Officer during construction, and a copy of the records shall be delivered to the Contracting Officer upon completion of the construction.

1.4 DISPOSAL

Except as otherwise specified in other sections of the specifications, disposal shall be in accordance with the following:

1.4.1 Reuse.

First consideration shall be given to salvage for reuse since little or no re-processing is necessary for this method, and less pollution is created when items are reused in their original form. Sale or donation of waste suitable for reuse shall be considered. Salvaged materials, other than those specified in other sections to be salvaged and reinstalled, shall not be used in this project.

1.4.2 Recycle.

Waste materials not suitable for reuse, but having value as being recyclable, shall be made available for recycling whenever economically feasible.

1.4.3 Waste.

Materials with no practical use or economic benefit shall be disposed at a landfill or incinerator.

PART 2 PRODUCTS

Not used.

PART 3 EXECUTION

Not used.

-- End of section --

SECTION 01 78 24.05 20

FACILITY OPERATION AND MAINTENANCE SUPPORT INFORMATION
11/07

PART 1 GENERAL

1.1 GENERAL REQUIREMENTS

This section provides the requirements for operation and maintenance support information (OMSI). OMSI contains detailed as-built information describing the efficient, economical and safe operation and maintenance, and repair of the facility. OMSI is provided as hard copy, manuals, .pdf files, and computerized maintenance management system (CMMS) data. The OMSI is to be factual, concise, comprehensive and written to be easily used by maintenance personnel. Descriptive matter and theory must include technical details that are essential for a comprehensive understanding of the operation, maintenance and repair of the system. The OMSI preparer shall ensure that OMSI reflect changes to systems and equipment, made during construction. The words "system", "systems", and "equipment", when used in this document refer to as-built systems and equipment.

1.1.1 Organization of OMSI

Prepare the OMSI in three parts. PART I - Facility Information, PART II - Primary Systems Information, and PART III - Product Data. Cross-referencing within or between OMSI Parts must be specific.

1.1.2 Sources of Data

The sources of data needed to prepare the OMSI include but are not limited to, the design plans and specifications, field visits, approved construction submittals and manufacturer's catalog data for materials, methods, and systems used in this contract.

1.1.3 OMSI Units of Measure

Provide OMSI utilizing the units of measure required by the RFP, Refer to UFGS Section 01 33 10.05 20, Design Submittal Procedures. Metric OMSI shall be in SI (System International) metric units exclusively.

1.1.4 Schedule of Operation and Maintenance Data Packages

Refer to UFGS Section 01 78 23, OPERATION AND MAINTENANCE DATA, located at the website location: http://www.wbdg.org/ccb for descriptions of SD-10, Operation and Maintenance Data packages, when referenced in Part 5, PRESCRIPTIVE SPECIFICATIONS, or in other UFGS sections. Submit Operation and Maintenance Manuals in accordance with Section 01 78 24.05 20 FACILITY OPERATION AND MAINTENANCE SUPPORT INFORMATION. When using UFGS Sections that reference 01 78 23, OPERATION AND MAINTENANCE DATA, change reference to 01 78 24.05 20, FACILITY OPERATION AND MAINTENANCE SUPPORT INFORMATION.

1.2 SUBMITTALS

The use of a "G" following a submittal indicates that a Government approval action is required. Submit the following in accordance with Section 01 33 10.05 20 DESIGN SUBMITTAL PROCEDURES and Section 01 33 00.05 20 CONSTRUCTION SUBMITTAL PROCEDURES.

SD-06 Test Reports

Validation Site Visit and Presentation; G

SD-11 Closeout Submittals

OMSI, Preliminary Submittal; G

OMSI, 100% - Prefinal Submittal; G

OMSI, Final Submittal; G

1.3 SUBMITTAL FORMAT

1.3.1 Hard Copies

Bind the OMSI in durable, hard cover, three-ring, water and grease resistant binders, which hold 8.5" X 11" sheets. Binders shall have clear pockets located on the front and on the spine that hold printed sheets. Parts I, II, and III are separate binders with white, blue, and red spine inserts (respectively). Use high quality paper and dividers of heavy-duty paper with plastic reinforced holes and integrated tabs. Tabs must be of varying size and color to distinguish organization. Use plain tabs to show the UNIFORMAT II number and title in Part III, Product Data. Provide a Master Table of Contents for each OMSI binder. Identify each binder on both the cover insert sheet and the spine insert sheet with the following information:

1. OMSI Part I, II or III with appropriate titles
2. Building Number
3. Project Title
4. Activity and Location
5. Construction Contract Number
6. Prepared For: (Contracting Agency)
7. Prepared By
8. Volume Number - Each binder is a single volume. Number each volume consecutively.

1.3.2 Electronic Format (PDF)

Provide the OMSI on Compact Disk using Adobe Acrobat 5.0 or similar software capable of producing PDF (Portable Document Format) files. The PDF file is duplicate of the hard copy format. The PDF files shall be indexed by part (Facility Information, Primary Systems Information, and Product Data) and each entry identified in the table of contents.

1.4 SUBMITTAL REQUIREMENTS

1.4.1 Preliminary Submittal

Submit the Preliminary submittal when construction is 50% complete. Provide two hard copies to the Contracting Officer. Present the submittal in sufficient detail to evaluate the data collection and arrangement

process. One of these copies, reviewed by the Navy Technical Representative, with review comments, will be returned to the Contractor for preparation of the 100% submittal. Include in the submittal, as a minimum, all available Part I, Facility Information; all systems of Part II, Primary Systems Information (at least one system shall be essentially complete and the remaining systems shall be at least 50% complete); and at least two divisions of Part III, Product Data.

1.4.2 100% - Pre-final Submittal

Provide two hard copies to the Contracting Officer. The 100% - Prefinal submittal is due 30 days prior to Beneficial Occupancy Date (BOD). This submittal shall be a complete, working document that can be used to operate and maintain the facility.

1.4.3 Final Submittal

Provide two hard copies and two sets of electronically formatted information to the Contracting Officer 30 days prior to the Beneficial Occupancy Date (BOD).The final submittal is due 90 days after BOD. Include the final submittal in the Construction Schedule.

PART 2 PRODUCTS

2.1 DESCRIPTION OF WORK

2.1.1 OMSI Part I - Facility Information

a. General Facility and System Description - Describe the function of the facility. Detail the overall dimensions of the facility, number of floors, foundation type, expected number of occupants, and facility Category Code. List and generally describe all the facility systems listed in Part II, Primary Systems Information and any special building features (for example, HVAC Controls, Sprinkler Systems, cranes, elevators, and generators). Include photographs marked up and labeled to show key operating components and the overall facility appearance. Include a copy of the final "Completion Certification" which certifies completion and compliance of construction by the Contractor. This documentation will be provided by the Construction Quality Control Manager.

b. Basis of Design - Include the Basis of Design that shows the basic design scope of work, assumptions and the original intentions of the design A/E. Include a copy of the final "Design Quality Control Report Certification" which verifies conformance of the project design to the Request for Proposal. The Design Quality Control Manager or the Designer of Record will provide this documentation.

c. Safety Hazards - List all residual hazards identified in the Requirements Hazard Analysis as prepared by the design A/E. Provide recommended safeguards for each identified hazard.

d. Floor Plans - Provide uncluttered, legible 11" x 17" floor plans. Include only room numbers, type or function of spaces, and overall facility dimensions on the floor plans. Do not include construction instructions, references, frame numbers, etc.

e. Utility Connection and Cutoff Plans - Provide utility site plans and floor plans that indicate the main interior and exterior connection and cutoff points for all utilities. Include enough information to enable someone unfamiliar with the facility to

locate the connection and cutoff points. Indicate the room number, panel number, circuit breaker, valve number, etc., of each connection and cutoff point, and what that connection and cutoff point controls. These plans are in addition to Floor plans.

f. Equipment Warranty Tags and Guarantor's Local Representative - Provide with each warranty the name, address, and telephone number of the guarantor's representative nearest to the location where the equipment and appliances are installed. The guarantor's representative, upon request of the station representative, shall honor the warranty during the warranty period, and shall provide the services prescribed by the terms of the warranty. At the time of installation, tag each item of warranted equipment with a durable, oil- and water-resistant tag approved by the Contracting Officer. Attach tag with copper wire and spray with a clear silicone waterproof coating. Leave the date of acceptance and QC's signature blank until project is accepted for beneficial occupancy. Tag shall show the following information:

EQUIPMENT/PRODUCT WARRANTY TAG

Type of Equipment/Product _____
Warranty Period _____ From _____ To _____
Contract No. _____
Inspector's Signature _____
Date Accepted _____

Contractor:
Name: _____
Address: _____
Telephone: _____

Warranty Contact: _____
Name: _____
Address: _____
Telephone: _____

STATION PERSONNEL TO PERFORM ONLY OPERATIONAL MAINTENANCE

g. Extended Warranty Information - List and include copies of all warranties for products, equipment, components, and subcomponents whose duration exceeds one year. Cross-reference the list to the warranty copies included in Part III, Product Data. For each warranty listed indicate the applicable specification section, duration, start date, end date, and the point of contact for warranty fulfillment. Also, list or reference all specific operation and maintenance procedures that must be performed to keep the warranty valid.

h. Equipment and Warranty Tags Listing - Provide a table that lists the major equipment shown on the design equipment schedules and written warranties for equipment/products provided. Show the item descriptions, warranty information, locations, model numbers; and the names, addresses, and telephone numbers of the manufacturers, suppliers, contractor and subcontractors.

i. HVAC Filters - Provide a table that lists the quantity, type, size, and location of each HVAC filter.

j. Floor Coverings, Wall Surfaces, Ceiling Surfaces - Provide a table that lists by room number (including hallways and common spaces), the type, and area of finish. The table will include a facility summary of the total area for each type of space and floor, wall, or ceiling finish.

k. Windows - Provide a table that lists by room number (including hallways and common spaces), the type of window, window size, number of each size and type, and special features. The table will include a facility summary of the total number for each type and size of window.

l. Light Fixtures - Provide a table that lists by room number (including hallways and common spaces), type of light fixture, number of light fixtures, type of bulbs or tubes, and number of bulbs or tubes. The table will include a facility summary of the total number of fixtures of each type and number of bulbs or tubes of each type.

m. Plumbing Fixtures - Provide a table that lists by room number, the number and type of plumbing and bathroom plumbing fixtures (for example, sinks, toilets, urinals, showers and drinking fountains).

n. Roofing - Provide the total area of each type of roof surface and system. Provide the name of the roofing product and system; manufacturer's, supplier's, and installer's names, addresses, and phone numbers. For each type of roof, provide a recommended inspection, maintenance and repair schedule that details checkpoints, frequencies, and prohibited practices. List roof structural load limits.

2.1.2 Part II - Primary Systems Information

OMSI Part II, Primary Systems Information requires using a systems approach. This approach requires that consideration be given to the entire system (that is, the interfaces of equipment, connections and material flow within the system). Use Notes, Cautions and Warnings throughout the Part II, Primary Systems Information to emphasize important and critical instructions and procedures.

OMSI Part II, Primary Systems Information are required for the primary systems listed below;

1. Plumbing systems, including temperature actuated thermostatic water mixing valve]
2. HVAC systems, including chillers, boilers, heat pumps, air handling equipment, exhaust fans, fan coil units, VAV boxes, heart recovery wheels, hot and chilled water hydronic systems, control valves, and backflow preventers.
3. Direct Digital Controls/Space Temperature Controls
4. Steam condensate Pumps, Steam PRV valves.
5. Electrical systems, including transformers, diesel electric generator sets, automatic transfer switches, primary switchgear, secondary switchgear, high voltage switches, variable frequency drives, and frequency converters
6. Fire protection systems and fire alarm and detection systems
7. Site mechanical utilities, including cathodic protection
8. Site electrical utilities, including substations, transformers, and pad mounted switchgear

For each system, address;

a. Operation

(1) System Description - Provide a detailed discussion of the system composition and operation. Include technical details that are essential for an understanding of the system.

(2) Start-Up and Shutdown Procedures - Provide step by step instructions to bring systems from static to operational configurations and from operating to shutdown status.

(3) Normal and Emergency Operating Instructions - Provide a discussion of the normal and emergency operation and control of the system. Address operating norms (for example, temperatures, pressures, and flow rates) expected at each zone or phase of the system. Supplement the discussion with control and wiring diagrams and data. Include shutdown instruction for fires, explosions, spill, or other contingencies.

(4) System Flow Diagrams - Provide a flow diagram indicating system liquid, air or gas flow during normal operations. Integrate all system components into the diagram. A compilation of non-integrated, flow diagrams for the individual system components are not acceptable.

(5) Diagrammatic Plans - Provide floor plans indicating the location of equipment and configuration of the system installation. Include the configuration of associated piping or wiring. Subordinate structural features to utility features.

(6) Field Test Reports - Provide Field Test Reports (SD-06) that apply to equipment associated with the system.

(7) Operator Servicing Requirements - Provide instructions for services to be performed by the operator such as lubrication, adjustments, and inspection.

(8) Valve List - Provide a list of all valves associated with the system. Show valve type, identification number, function, location and normal operating position.

b. Preventive Maintenance- Preventive Maintenance Procedures, and Schedules - Provide Task Card for each individual maintenance task identified on the PM plan and Schedule. Include detailed PM procedures, safety instructions and precautions including lock out/tag out precautions, required skill level, number of personnel needed, frequency, special tools needed, parts needed, and estimated time required to complete the task. Include lubrication schedules indicating types, grades and capacities.

c. Troubleshooting Guides and Diagnostic Techniques - Provide step-by-step procedures for isolating the cause of system malfunctions. The procedures shall clearly state indications or symptoms of trouble; the sequential instructions, including checks and tests to be performed and conditions to be sought, to determine the cause; and remedial measures to bring the equipment and system to operating condition. Identify special test equipment required to perform the procedures. Start the troubleshooting guide at the system level and proceed to a level where detailed manufacturer's troubleshooting procedures for equipment and components can be referenced. Provide clear references to repair procedures included in Part III, Product Data.

2.1.3 PART III - Construction Submittals

This portion of the OMSI manual provides a record of the as-built products, materials, and equipment used in Part 4, PERFORMANCE TECHNICAL SPECIFICATIONS, and Part 5, PRESCRIPTIVE SPECIFICATIONS, of the Request for Proposal (RFP). This submittal includes a complete copy of the approved construction submittal used in the facility construction. Include, as a minimum, O&M Data, Materials, Equipment, Data Sheets, Test Reports, Warranties, Certificates, and Shop Drawings.

PART 3 EXECUTION

3.1 VALIDATION AND PRESENTATION

Provide a validation presentation of the OMSI Pre-final submittal to the users and field verify the OMSI's completeness and accuracy. Perform the validation site visit at the 100% - Pre-final OMSI submittal stage. Contact the Contracting Officer for the exact date.

The Design Quality Control Manager shall attend and provide a certifying statement that validation site visit and presentation is complete.

-- End of Section --

PART THREE – PROJECT PROGRAM

(Final RFP Submittal)

PROJECT DESCRIPTION – **CHAPTER 1**

PROJECT OBJECTIVES – **CHAPTER 2**

SITE ANALYSIS – **CHAPTER 3**

SPACE TABULATION FORM – **CHAPTER 4**

ROOM REQUIREMENTS – **CHAPTER 5**

ENGINEERING SYSTEMS REQUIREMENTS – **CHAPTER 6**

NAVFAC MARIANAS

PART 3
Project Program

RED HORSE CANTONMENT OPERATIONS FACILITY

FY12 MCAF SAKW05-9101

Category Code 219-944

PRTC, ANDERSEN AIR FORCE BASE (AAFB), GUAM

Updated per Amendment 26 APRIL 2012

Table of Contents

1.0 PROJECT DESCRIPTION 4

1.1 General Description 4
1.2 Performance Period 4
1.3 Project Location 4

2.0 PROJECT OBJECTIVES 4

2.1 Mission Statement 4
2.2 Facility Function 4
2.3 Project Specific Priorities 5
2.3.1 Sustainable Design 5
2.3.3 Building Commissioning 8
2.3.4 Accessibility Requirements 8
2.3.5 Antiterrorism Criteria 9
2.4 Appropriate Design 9
2.5 Workflow Process 14
2.5.1 Hours Of Operation 15
2.5.2 Staffing/Occupancy 15
2.6 Fire Department Building Access 15
2.7 Adaptability and Flexibility 15
2.8 Conformance with Environmental Management System (EMS) 16
2.9 Fast-Track Project Implementation 16

3.0 SITE ANALYSIS 17

3.1 General Site Description 17
3.2 Existing Site Conditions 17
3.3 Site Development Requirements 18

4.0 BUILDING REQUIREMENTS 18

4.1 Space Tabulation 18
4.2 Space Relationships 18
4.3 Exterior Character 22
TABLE 4.1 – SPACE TABULATION 25

***END OF 4.0 BUILDING REQUIREMENTS* 26**

5.2 Interior Finish and Color Schedule 29
5.3 Signage 31
5.4 Technical Room Requirements 32

6. ENGINEERING SYSTEMS REQUIREMENTS 48

A10 FOUNDATIONS 48
B10 SUPERSTRUCTURE 50
C10 INTERIOR CONSTRUCTION 57
D10 CONVEYING 61
D20 PLUMBING 62
D30 HVAC 66
D40 FIRE PROTECTION 70
D50 ELECTRICAL 72
E20 FURNISHINGS 99
G10 SITE PREPARATION 91
G20 SITE IMPROVEMENTS 94

G30 SITE CIVIL/MECHANICAL UTILITIES 97
G40 ELECTRICAL SITE UTILITIES 100

NOTE:

Part 3 contains the project description, functional and performance requirements, scope items, and expected quality levels that exceed Part 4. Part 4 identifies design criteria, verification requirements, and performance and quality requirements of products. See "Order of Precedence" paragraph in Part 2 for relationships between all parts of this RFP.

1.0 PROJECT DESCRIPTION

1.1 General Description

This is a "**Design-Build** "project.

Construct single storey reinforced concrete building in accordance with the project program, notional concept drawings and specifications. This project shall comply with the latest criteria listed under Para. 2.4 "Appropriate Design of this RFP document.

1.2 Performance Period

The performance period of this project is **530 calendar days** commencing on the date of contract award. The performance period includes all required design, reviews, approval of final design, procurement of materials, construction, testing, corrections if required, final testing, acceptance and other requirement necessary to deliver a complete and usable facility.

1.3 Project Location

The project is located at Northwest Field, Andersen Air Force Air Base, Guam.

2.0 PROJECT OBJECTIVES

2.1 Mission Statement

The mission of RED HORSE (Rapid Engineer Deployable Heavy Operational Repair Squadron) is to provide the U.S. Air Force with highly mobile civil engineer response force to support contingency and special operations worldwide. Major wartime responsibilities include providing a highly mobile, rapidly deployable, self-sufficient civil engineering response force that performs force or weapons systems beddown and heavy damage repair required for recovery of critical Air Force facilities/utility systems and aircraft launch/recovery.

2.2 Facility Function

The Cantonment Operations facility will house the Structures, HVAC, Electrical, and Utility Training areas and other supporting spaces. These areas in the new facility will train 45 airmen in their respective crafts that will include all REDHORSE specific Special Capability Training, such as ABM/UBM K-Span construction, Tilt-Up construction, Pre-Engineered Building construction, ROWPU Operations, BARE Systems operations and maintenance, and maintenance of all deployable vertical beddown systems.

2.3 Project Specific Priorities

To meet the goals of the project, the Design-Build contract is proposed to be advertised as a Base Bid with One (1) Option Bid Item. The proposed bid items are as follows:

Basic Bid

Base Bid: Construct REDHORSE Cantonment Operations Facility complete, including design, construction and conversion of the existing overhead primary electrical distribution system to approximately 2,100 LF of underground primary electrical system including trenching and site restoration around the REDHORSE industrial site. (Overhead electrical to Underground electrical conversion is described in Engineering Systems Requirements, G41, Exterior Electrical Service and Part 6 of the RFP Documents).

Option Bid

OB1: Explosives Safety Submission (ESS) Munitions Response Sites Guam Construction Support Implementation – All work to conform to the ESS requirements in Part 6, Attachment F, based on the site-assessed "moderate" or "medium" risk of accidental UXO discovery.

2.3.1 Sustainable Design

Integrate sustainable strategies and features into the design to minimize the energy consumption of the facilities; conserve resources; minimize adverse effects to the environment; and improve occupant productivity, health, and comfort. Reduce the total cost of ownership of the project using a whole building, life-cycle approach. In accordance with Engineering & Construction Bulletin 2008-01 and other directives, the facility and all site features shall be designed and constructed using United States Green Building Council Leadership in Energy and Environmental Design- New Construction principles (LEED-NC V3, 2009). Design and construction shall incorporate to the fullest extent possible the high performance and sustainable building goals of Executive Order 13423, consistent with mission, budget and client requirements of the project.

The minimum sustainable design level for the project is to achieve is LEED-NC Silver rating. The constructed facility shall be certified by the USGBC as having met the USGBC LEED-NC V3 requirements for the required Silver rating level. A/E LEED Consultant shall pre-register the project at USGBC LEED on-line website prior to design-build contract award.

Design-build contractor shall administer the USGBC LEED On-line website for the duration of design, construction and through final certification. Contractor shall provide all required documentation, forms, templates, necessary calculations and required

commissioning to ensure final certification. Contractor shall be responsible to meet all LEED™ rating system checklist prerequisites and as many credits as practical while still achieving at minimum LEED™ Silver Certification.

NAVFAC Marianas, or its representative, will review, and provide comments to the design-build LEED documents to observe the completeness and correctness of submittals; then upon final submittal of all documents, will observe the USGBC LEED website to track USGBC Certification of the building. The design-build contractor is required to interface with NAVFAC Marianas, or its representative, during the design, construction, and final certification process of the project.

The contractor shall be required to update and maintain the Air Force MILCON Sustainability Requirements Score Sheet from design through certification. After certification the score sheet shall then be submitted to NAVFAC Marianas or its representative. In addition to all required prerequisites the following LEED-NC V3. credits are suggested as attainable strategies for sustainable design and certification unless proven not applicable. Contractor shall coordinate the sustainable strategies and LEED Project Administration with NAVFAC Marianas to meet the minimum Silver Certification requirement.

- SS-1 Site Selection
- SS-4.2 Alternative Transportation-Bicycle Storage and Changing Rooms
- SS-4.4 Alternative Transportation-Parking Capacity.
- SS-6.1 Storm Water Design, Quantity Control
- SS-6.2 Storm Water Design, Quality Control
- SS-7.1 Heat Island Effect-Non-Roof
- SS-7.2 Heat Island Effect-Roof
- SS-8 Light Pollution Reduction
- WE-1.2 Water Efficient Landscape, No Potable Water Use For Landscaping
- WE-3 Water Use Reduction: 30% Reduction
- EA-1 Optimize Energy Performance. Improve by Minimum 30% for New Buildings
- EA-3 Enhanced Commissioning
- EA-4 Enhanced Refrigerant Management.

- EA-5 Measurement And Verification
- MR-2 Construction Waste Management: 50% Recycled or Salvaged.
- MR-5 Regional Materials. 10% of Content
- MR-7 Certified Wood. Certified Sustainable Wood Products.
- IEQ-1 Outdoor Air Delivery Monitoring
- IEQ-2 Increased Ventilation
- IEQ-3.1 Construction IAQ Management-During Construction
- IEQ-3.2 Construction IAQ Management-Before Occupancy
- IEQ-4.1 Low-Emitting Materials-Adhesives and Sealants
- IEQ-4.2 Low-Emitting Materials-Paints and Coatings
- IEQ-4.3 Low-Emitting Materials-Flooring Systems
- IEQ-4.4 Low-Emitting Materials – Composite Wood and Agri-fiber Products
- IEQ-5 Indoor Chemical and Pollutant Source Control- Provide permanent entry-way systems at least 10 feet long in the direction of travel to capture dirt and particulates
- IEQ-6.1 Controllability of Systems-Lighting
- EQ-7.1 Thermal Comfort Verification-Design: Design to ASHRAE Standards 55-
  - 2004 for Thermal Comfort.
- IEQ-7.2 Thermal Comfort-Verification: Provide a permanent monitoring system
  - to ensure that building performance meets the desired comfort criteria as
  - determined by IEQ Credit 7.1: Thermal Comfort-Design.
- IEQ-8.2 Daylight & Views. Use Sufficient Windows To Allow Views To The Exterior of 75% Of All Regularly Occupied Spaces.
- IDP-2 LEED Accredited Professional
- RP -1.1 Achieved Through SS 6.1
- RP -1.2 Achieved Through SS 6.2
- RP -1.1 Achieved Through WE 1.2

- RP -1.1 Achieved Through EA 1 – 30%
- Moisture Control. Establish and implement a moisture control strategy for controlling moisture flows and condensation to prevent building damage and mold contamination.
- Bio-Based Products: For USDA designated products use products meeting or exceeding USDA's biobased content recommendations.
- Energy-Efficient Products: All energy using products shall either be Energy Star or FEMP recommended efficiency. Where Energy Star or FEMP recommendations have not been established, efficiency shall be in the top 25% for the type of product procured. All energy using products shall also meet FEMP requirements for low standby power consumption.

Ensure sustainable strategies and feature in the design phase are incorporated in the construction phase.

2.3.2 Energy Conservation

Energy conservation shall be in accordance with UFC 3-400-01, Design Energy Conservation, Executive Order 13423, and EPAct 2005.

2.3.3 Building Commissioning

Provide Fundamental Commissioning to meet the requirements of USGBC LEED Rating System version 2.2. and UFGS section 01 45 00.05 20, *Design and Construction Quality Control*. At a minimum Commission the following systems: HVAC systems and controls, lighting controls, and if provided, day lighting controls, refrigeration systems and controls, renewable energy systems, and domestic hot water systems. See the following "Engineering System Requirements" sections in Chapter 6 of the Project Program to determine any additional systems to be commissioned.

The designated Commissioning Authority (CA) shall meet the qualifications of USGBC LEED Rating System version 3 and UFGS section 01 45 00.05 20, Design and Construction Quality Control. The CA shall report results, recommendations, and findings directly to the Government. The CA shall certify the results of the Air Force MILCON Sustainability Requirements Score Sheet, completed at the close out of the project, after USGBC certification has been awarded

2.3.4 Accessibility Requirements

Provide barrier-free design in accordance with the requirements of the Uniform Federal Accessibility Standards (UFAS) and Americans with Disabilities Act and Architectural

Barriers Act Accessibility Guidelines, dated July 23, 2004.

The following provisions for the physically handicapped will be included:
Handicapped path of travel from the parking lot to the facility; Handicapped accessibility throughout the building, including door and corridor widths, lever type locksets, and handicap signage; Handicapped accessible toilets, including a handicapped toilet stall, urinal, lavatory and shower stalls; Handicapped electric water cooler and public telephones.

2.3.5 Antiterrorism Criteria

Design the facility to comply with UFC 4-010-01, DoD Minimum Antiterrorism Standards for Buildings.

The facility will have an occupancy designated as primary gathering in accordance with UFC 4-010-01.

Facility will be less than 3 stories and will not be required to meet the progressive collapse avoidance standards.

The facility shall not be provided with a permanent means of access to the roof (from the exterior).

Facility is within a controlled perimeter.

Facility minimum standoff distance is 25 meters 82 feet from parking and roadways.

Develop the site to provide the standoff requirements listed in UFC 4-010-01

Mechanical equipment located outside the building shall be enclosed by concrete masonry unit screenwalls at all sides, a chain-link fabric entry gate and a chain-link fabric cover at the top. The chain-link cover shall be bolted to the frame and openable in sections. Padlock will be provided.

2.4 Appropriate Design

The project design shall be in accordance with the project requirements specified in this RFP and shall comply with current publications of applicable building codes, U.S. Military criteria and standards including but not limited to the following:

MIL-HDBK 1013/1A, Design Guidelines for Physical Security of Facilities, 15 December 1993

MIL-HDBK-1190, Facility Planning and Design Guide, 1 September 1987

MIL-HDBK -419A, Grounding, Bonding, and Shielding for Electronic Equipment and Facilities, Vol. I & Vol. II.

MIL-STD-188-124B, Grounding, Bonding and Shielding.

AFSSI 7703, Protected Distributed Systems (Air Force Security Systems Instruction).

AFH 32-1084, Facility Requirements, 01 September 1996.

AFI 32-1065, Grounding Systems, 01 October 1998

AFI 31-101, Air Force Installation Security

OSD Document 09758-08 Access for People with Disabilities, Memorandum from the Secretary of Defense, 31 October 2008.

Americans with Disabilities Act and Architectural Barriers Act Accessibility Guidelines (ADA-ABA)

Architectural Compatibility and Base Design Standards, Andersen Air Force, Guam

Applicable Government of Guam Codes and Regulations

DoD M 5200-IR, Information Security Program, dated January 1997

EM 385-1-1, Safety and Health Requirements Manual, dated 15 Sep. 2008

Federal Standard 595a, Colors

Occupational Safety and Health Administration (OSHA)
OSD Document 09758-08, Access for People with Disabilities, Memorandum from the Secretary of Defense, dated 31 Oct. 2008

Guam Storm Drainage Manual, US Army Corps of Engineers, 2006

Manual on Uniform Traffic Control Devices (MUTCD), Latest Edition

United Facilities Criteria (UFC):

UFC 1-200-01, Design: General Building Requirements, 16 August 2010
UFC 1-300-07A, Technical Requirements: Design-Build, 01 March 2005
UFC 1-300-09N, Design Procedures, 27 January 2010
UFC 3-100-10N, Final Draft, Architecture, July 2006
UFC 3-110-03, Roofing, 26 September 2006
UFC 3-120-01, Air Force Sign Standard, 06 February 2003
UFC 3-120-10, Interior Design, July 2007
UFC 3-200-10N, Design: Final Draft Civil Engineering, Final Draft July 2006
UFC 3-210-02, POV Site Circulation and Parking, March 2010

UFC 3-220-01N, Geotechnical Engineering Procedures for Foundation Design of Buildings and Structures, 15 August 2005

UFC 3-230-17FA, Drainage in Areas Other Than Airfields, 16 January 2004

UFC 3-250-01FA, Pavement Design for Roads, Streets, Walks and Open Storage Areas, 16 January 2004

UFC 3-250-18FA General Provisions and Geometric Design for Roads, Streets, Walks and Open Storage Areas, 01 June 2006

UFC 3-300-01, Structural Engineering with Change 1, 20 July 2010

UFC 3-310-04, Seismic Design for Buildings with Change 1, 27 January 2010

UFC 3-400-01, Energy Conservation with Change 4, August 2008

UFC 3-400-02, Design: Engineering Weather Data, 28 February 2003

UFC 3-400-10N, Mechanical Engineering, Final Draft, July 2006

UFC 3-410-01FA, Heating, Ventilating, and Air Conditioning with Change 4, January 2010

UFC 3-410-02N Heating, Ventilating, Air Conditioning and Dehumidifying Systems, 8 June 2005

UFC 3-410-04N, Industrial Ventilation, 25 October 2004

UFC 3-420-01, Plumbing Systems with Changes 1-8, 25 October 2004

UFC 3-410-02A, Heating, Ventilating, Air Conditioning (HVAC) Control Systems, 8 June 2005.

UFC 3-430-01FA, Heating and Cooling Distribution Systems, 25 July 2003

UFC 3-440-05N, Tropical Engineering, 16 January 2004

UFC 3-501-01, Electrical Engineering, February 3, 2010

UFC 3-520-01, Interior Electrical Systems, 03 February 2010

UFC 3-530-01, Design: Interior and Exterior Lighting and Controls with Change 1, 10 December 2010

UFC 3-550-01, Exterior Electrical Power Distribution, 03 February 2010

UFC 5-560-01, Electrical Safety, O&M with Change 3, 03 September 2009

UFC 3-580-01, Telecommunications Building Cabling Systems Planning and Design

UFC 3-600-01, Fire Protection Engineering for Facilities, 14 July 2009

UFC 3-800-10N, Environmental Engineering

UFC 4-010-01, Design: DoD Minimum Antiterrorism Standards for Buildings, 22 January 2007

UFC 4-010-02, DoD Minimum Antiterrorism Standoff Distances for Buildings, 19 January 2007

UFC 4-021-01, Mass Notification Systems, January 2010

UFC 4-030-01, Sustainable Development, 21 December 2007

ITG FY05-2, Interim Technical Guidance “NAVFAC Humid Area HVAC Design Criteria”

UCR 2008, United Capabilities Requirements, 2008

United Facilities Guide Specifications (UFGS)

Uniform Federal Accessibility Standards (UFAS)

UFC 3-800-10N Environmental Engineering

NAVFAC P-307, Management of Weight Handling Equipment

NAVCRANECEN INSTRUCTION 11450.1A

National Codes and Criteria

International Building Code (IBC), 2009

International Plumbing Code (IPC), 2009

IMC, International Mechanical Code, 2003

LEED (Leadership in energy and Environmental Design) Version 3

Executive Order: 13423

Guiding Principles for Federal Leadership in High Performance and Sustainable Buildings (2006)

ANSI C2-2007, National Electrical Safety Code

TIA/EIA 568-A, Commercial Building Telecommunications Cabling Standard.

TIA/EIA 569, Commercial Building Standard for Telecommunications Pathways and Spaces.

TIA/EIA 606, Admin Standard for Telecomm Infrastructure of Commercial Buildings.

ETL 02-12, Communications and Information System Criteria for Air Force Facilities, Department of the Air Force AFCESA.

TDMM (BICSI), Telecommunications Distribution Methods manual (Building Industry Consulting Services Institute)

National Fire Protection Association (NFPA) 101, Life Safety Code, 2009

ACI 318-08/318R-08, Building Code Requirements for Reinforced Concrete and Commentary

ACI 301(latest edition), Specification for Structural Concrete for Buildings

AISC Manual of Steel Construction Allowable Stress Design or Manual of Steel Construction LRFD Design

ASCE 7-05, Minimum Design Loads for Buildings and Other Structures

ASCE 8-02, Specification for Design of Cold-formed Stainless Steel

AWS D1.1, Structural Welding Code-Steel
PCI, PCI Design Handbook, Precast and Pre-stressed Concrete

UFAS, Uniform Federal Accessibility Standard, dated 1 April 1988.

ADAAG, American with Disabilities Act Accessibility Guidelines, dated 26 July 1991

Mechanical systems, ASHRAE and SMACNA Standards

ASHRAE 62.1, Ventilation for Acceptable Indoor Air Quality

Seismic Restraint Manual.

NFPA 90A, Installation of Air Conditioning and Ventilation System 2002 Edition.

ASHRAE Fundamentals, 2005 Edition

ASHRAE HVAC Application, 2003 Edition

ASHRAE 90.1-2007 Energy Efficient Design of New Building Except Low Rise Residential Buildings.

CFR 10-435, Energy Conservation

EPACT 2005, Energy Policy Act of 2005

National Fire Protection Association (NFPA) Codes

NFPA 1, Fire Prevention Code, 2006
NFPA 10, Portable Fire Extinguishers, 2007
NFPA 13, Installation of Sprinkler Systems, 2007
NFPA 24, Private Fire Service Mains, 2007
NFPA 70, National Electrical Code 2008

NFPA 72, National Fire Alarm Code, 2007

NFPA 90A, Installation of Air Conditioning and Ventilating Systems, 2002 Edition

NFPA 101, Life Safety Code, 2006

NFPA780, Lightning Protection

The Contractor should recognize and acknowledge that this is a Design-Build contract. The RFP sets forth the project's minimum requirements which shall be used by the Design-Build Contractor to design, document, and construct a complete and useable facility. The concept drawings in PART 6 of this RFP package are preliminary in nature and are not intended to be final, complete and coordinated designs. As the designer of record, the design-build contractor shall be responsible to provide a fully coordinated and complete design in accordance with all applicable codes, regulations, and contract requirements. The designer of record shall be responsible for professional quality, technical accuracy, and the coordination of all final designs, drawings, and specifications. The concept drawings included in PART 6 of this RFP package, particularly the site plans, floor plans and exterior elevations, illustrate a concept design that has been reviewed by the User. Accordingly, these concept drawings shall not be altered significantly during the design phase, unless otherwise required in compliance with contract requirements, including applicable codes and regulations. Subsequent design refinements by the successful offeror after contract award shall be executed in conjunction with the design presentation/working session and submittal reviews as part of the design phase.

2.4.1 Building Information Modeling (BIM) Requirements

The project design shall be developed using Building Information Modeling (BIM) as set forth in Part 6 - Attachment B – Building Information Modeling (BIM) Requirements.

2.5 Workflow Process

The proposed facility shall accommodate Structures tool room, Metal, Carpentry, Utilities, HVAC and Electrical Shop Areas, Offices and support spaces.

Shop Areas shall consist of the following spaces:
- Metal Shop Area
- Metal Shop Welding Room
- Structures Training Room
- Structures NCOIC Office

Structures Tool Room

Carpentry Shop Area

Utilities Shop Area
- Utilities Tool Room
- Utilities NCOIC Office
- Utilities Training room

HVAC Shop Area
- HVAC NCOIC Office
- HVAC Training room
- HVAC Tool Room

Electrical Shop Area
- Electrical NCOIC Office
- Electrical Training room
- Electrical Tool Room

Support areas will include the spaces listed below.
Hallway and circulation spaces
Computer-Based Training room
Break, Conference room
Men's and Women's toilets and shower rooms
Janitor closet
Copy room
Storage spaces

Communications room
Mechanical equipment room
Electrical room

2.5.1 Hours Of Operation

The facility will operate during normal office hours, 5 days a week.

2.5.2 Staffing/Occupancy

The number of occupants to be accommodated is 23 persons.

2.6 Fire Department Building Access

The facility shall be provided with a Stainless Steel Knox Box located at the hallway near the south side door entrance to facilitate the entry of firefighters in the event of emergencies.

Fire department apparatus access via an all weather surface from at least one side of the building which terminates no further than 10 meters from the building shall be provided.

2.7 Adaptability and Flexibility

Modular workstation will provide maximum flexibility in space utilization of the facility.

2.8 Conformance with Environmental Management System (EMS)

Executive Order 13123 established the requirement that all Federal agencies implement an Environmental Management System (EMS). Executive Orders 13148, 13423 and 13514 confirmed and expanded this requirement. Since a contractor's action affects Andersen Air Force Base's EMS goals, they shall be required to support all the goals of the installation EMS. They shall not be required to have their own EMS.

The contractor shall perform work under this contract consistent with the installation's environmental policy and objectives in the installation EMS manual. The contractor shall perform work in a manner that conforms to all appropriate Environmental Management Programs and Operational Controls identified in the EMS Manual, and provide monitoring and measurement information as necessary for Andersen AFB to address environmental performance relative to the environmental, energy, and transportation management goals. In the event an environmental nonconformance or noncompliance associated with the contracted services is identified, the contractor shall take corrective and/or preventive actions. In the case of a noncompliance, the Contractor shall respond and take corrective immediately. In the case of a nonconformance, the Contractor shall respond and take corrective action based on the time schedule established by the EMS coordinator. In addition, the Contractor shall ensure that their employees are aware of the roles and responsibilities identified by the environmental management system and how these requirements affect their work performed under this contract.

All on-site contractor personnel shall complete EMS awareness training. The online training is available through the Environmental Flight.

Contractor to request Bio-Environmental Engineering (36MDOS/SGOAB) to be present for the acceptance testing of the duct collection system for carpentry and metals shop including testing of ventilation for chemical storage room. Installation and Testing schedule shall be provided for 36 MDOS/SGOAB.

2.9 Fast-Track Project Implementation

Contractor is required to submit Final Civil and Exterior Utilities designs for government approval within 50-days after PAK meeting.

Note: At minimum, the 50-day duration is to include an interim government review of 10-working calendar days.

After government approval is provided for Final Civil and Exterior Utilities designs, the contractor will be issued a Notice To Proceed (NTP) to begin civil and preliminary site work activities.

Contractor is required to track Remaining Design schedule separately from Civil and Exterior Utilities Design submittals.

Preparation of Remaining Design is to start immediately following construction award, at minimum, remaining Design schedule is to include two (2) interim government reviews of 21-calendar days

3.0 SITE ANALYSIS

3.1 General Site Description

Northwest Field was constructed in the mid 1940s. At that time, it was one of two airfields constructed on the northern end of Guam and served as the primary base for the B-29 bomber and other fighter squadrons. The Northwest Field was abandoned in the mid-1950s after a typhoon destroyed the base.

3.2 Existing Site Conditions

The project is located near the northern apron of the airfield adjacent to Route 3A near Urunao Point. Refer to the location plan and vicinity map included in Part 6, Attachments, of this RFP documents.

Topographic survey map is also included in the Part 6, Attachments, of this RFP documents.

The area surrounding the project site is under construction. The U.S. Air Force 554TH RED HORSE Squadron (554 RHS) is designing and constructing roadways and utility systems for the proposed Northwest Field beddown. Various completed and ongoing construction contracts have also designed and constructed connecting roadways and utilities for each facility in the area.

Because the Northwest Field is currently under construction, the site conditions progressively changes. The existing site conditions, including existing grades shown on the topographic survey map may not be the same as the conditions during the Design/Build phase. Design/Build Team shall conduct independent research and field verify the existing conditions and infrastructure development prior to submittal of his or her proposal.

Existing water, sewer, electrical, and communications systems are shown on Part 6, Attachments, of this RFP documents. Contractor shall field verify and perform independent engineering study prior to submittal of his or her proposal.

Design and construction of the facility and associated infrastructure shall incorporate existing conditions, on going design and construction, and future facilities' footprints in the RED HORSE compound in accordance with the latest edition master plan.

3.3 Site Development Requirements

Coordination with the 554 RHS during the design and construction phases is critical as the Northwest Field beddown is currently in development. Coordinate field verifications with 554 RHS. Contact the Contracting Officer for clarification regarding the extent of the required site work. Applicable requirements of UFC 4-010-02, DoD Minimum Anti-terrorism Standoff Distances for Buildings shall be implemented.

The project shall be sited to provide the required AT/FP standoff distance of 10 m from the roadways, 25 m. from the vehicle parking, and to accommodate 10m separation distance to adjacent inhabited buildings.

In accordance with UFC 4-010-01, the REDHORSE Cantonment Facility will qualify as inhabited building near the administrative spaces and uninhabited on spaces where shops and tool rooms are located. The facility will comply with the minimum standoff distance of 10 m. from the administrative spaces to access roadways within a controlled facility.

Site development shall include building layout, walkways and access road widening utilities connections and storm water management. DB Contractor to verify the availability of the as-built drawings or final drawings from the contracting officer and coordinate proposed building finish floor elevation and walkways layout with the final grading of immediate vicinity surrounding the RED HORSE Cantonment facility.

Storm water systems shall be in accordance with the latest edition of the drainage master plan and applicable local and federal regulations. All proposed drainage design and improvements shall be coordinated with and approved by 554 RHS prior to construction of those improvements.

Grass seed and turf mix shall be by hydraulic seeding and mulching with Bermuda grass in accordance with Andersen Air Force Base Architectural Compatibility and Base Design Standards (ACBDS). Landscaping shall not require permanent irrigation system

Walkways around the building and to existing roadway on the east side is included on this project. Refer to Part 6, Attachments, of this RFP documents.

4.0 BUILDING REQUIREMENTS

4.1 Space Tabulation

See Table 4.1, Space Tabulation.

4.2 Space Relationships

The primary spaces to be accommodated by the facility shall include the areas listed below:

- There are four major components in this facility: The HVAC unit, the Structures unit, the Utilities unit and the Electrical unit. Common areas include the Break/Conference Room, the Computer-Based Training (CBT) Room, the toilets and showers, the Copy Room, and Janitor's Closet. A personnel entry door at the South and another at the East provide personnel access to the interior hallway that connects to the four major components and common areas.

- The HVAC Unit, comprised of the following rooms:

  - HVAC Shop, where HVAC equipment are maintained, repaired, tested and certified prior to deployment or off-site, long-term storage. It is directly accessible from the exterior by personnel (through a personnel entry door) and by vehicle (through 14'-0" X 14'-0" overhead coiling/roll-up door). It also has direct access to the interior hallway.

  - HVAC Tool Room, directly adjacent to and accessible from the HVAC Shop. This is an enclosed room with modular warehouse shelving (collateral equipment).

  - HVAC NCOIC Office, directly adjacent to and accessible from the HVAC Shop. This is a private office with space for desk, desk chair, guest chair and file storage (collateral equipment).

  - HVAC Training Room, directly adjacent to and accessible from the HVAC Shop. This is a private room with space for desk, desk chair, guest chair and file storage (collateral equipment).

  - Refrigerant Storage, adjacent to the HVAC Shop but accessible only from the exterior. This is to store a minimal amount of refrigerant (in gas cylinders) used in maintaining and repairing HVAC equipment.

- The Structures Unit, comprised of the following rooms:

  - Carpentry Shop, where various equipment used in cantonment operations are maintained, repaired, and fabricated prior to deployment or off-site, long-term storage. It is directly accessible from the exterior by personnel (through a personnel entry door) and by vehicle (through 14'-0" X 14'-0" overhead coiling/roll-up door). It also has direct access to the interior hallway.

  - Metal Shop, where metalwork is performed on various equipment used in cantonment operations. It is directly accessible from the exterior by personnel (through a personnel entry door) and by vehicle (through a 14'-0" X 14'-0" overhead coiling/roll-up door). Adjacent to it are the Metal Shop Welding Room, the Structures Training Room, the Structures NCOIC Office, and the HVAC Shop. It also has direct access to the interior hallway.

- o Metal Shop Welding Room, where welding work is performed in support of the Metal Shop operations. It is adjacent to and accessible from the Metal Shop (through personnel double doors), but it also has direct access from the exterior (through a 14'-0" X 14'-0" overhead coiling/roll-up door).

- o Oxygen and Acetylene Storage, adjacent to the Metal Shop Welding room, but accessible only from the exterior. This is to store a minimal amount of oxygen and acetylene (in gas cylinders) used in welding operations.

- o Structures Tool Room, where tools used by both the Carpentry Shop and the Metal Shop are stored. It is directly accessible from the exterior by personnel (through a personnel entry door) and by vehicle (through a 14'-0" X 14'-0" overhead coiling/roll-up door). This is an enclosed room with modular warehouse shelving (collateral equipment).

- o Structures NCOIC Office, directly adjacent to and accessible from the Metal Shop Area. This is a private office with space for desk, desk chair, guest chair and file storage (collateral equipment).

- o Structures Training Room, directly adjacent to and accessible from the Metal Shop Area. This is a private room with space for desk, desk chair, guest chair and file storage (collateral equipment).

- The Utilities Unit, comprised of the following rooms:

  - o Utilities Shop, where Reverse Osmosis Water Purification Units (ROWPU) is maintained, repaired, tested and certified prior to deployment or off-site, long-term storage. It is directly accessible from the exterior by personnel (through a personnel entry door) and by vehicle (through 14'-0" X 14'-0" overhead coiling/roll-up door). It also has direct access to the interior hallway.

  - o Utilities Tool Room, directly adjacent to and accessible from the Utilities Shop. This is an enclosed room with modular warehouse shelving (collateral equipment).

  - o Utilities NCOIC Office, directly adjacent to and accessible from the Utilities Shop. This is a private office with space for desk, desk chair, guest chair and file storage (collateral equipment).

  - o Utilities Training Room, directly adjacent to and accessible from the Utilities Shop. This is a private room with space for desk, desk chair, guest chair and file storage (collateral equipment).

  - o Chemicals Storage, adjacent to the Utilities Shop but accessible only from the exterior. This is to store a minimal amount of chlorine in powder form used in ROWPU maintenance and repair operations.

- The Electrical Unit, comprised of the following rooms:

  - Electrical Shop, where electrical repair work is performed on various equipment used in cantonment operations. It is directly accessible from the exterior by personnel (through a personnel entry door) and by vehicle (through a 14'-0" X 14'-0" overhead coiling/roll-up door). It also has direct access to the interior hall-way.

    A 48" X 80" Workbench is contained within this area, preferably with the long side against a solid wall.

  - Electrical Tool Room, directly adjacent to and accessible from the Electrical Shop. This is an enclosed room with modular warehouse shelving (collateral equipment).

  - Electrical NCOIC Office, directly adjacent to and accessible from the Electrical Shop. This is a private office with space for desk, desk chair, guest chair and file storage (collateral equipment).

  - Electrical Training Room, directly adjacent to and accessible from the Electrical Shop. This is a private room with space for desk, desk chair, guest chair and file storage (collateral equipment).

- Common facilities located centrally to allow easy access to the building occupants. These common facilities include the following rooms:

  - Break/Conference Room, where the building users can lounge and prepare and eat snacks. It will also be used for meetings and conferences. Contained in this room are base cabinets, a countertop with a kitchen sink, overhead wall cabinets, space for refrigerator and microwave oven (collateral equipment). The Supplies Storage, accessible from the Break/Conference Room, is an enclosed pantry for storage of supplies.

  - Computer-Based Training (CBT) Room, where up to 19 computer workstations (collateral equipment) are contained for training purposes.

  - Copy Room, where printers, fax machine and other collateral office equipment are contained. Base cabinets with countertop and overhead wall cabinets are provided for storage.

  - Men's Toilet and Showers

  - Women's Toilet and Shower

  - ADA-Compliant (Handicap) Toilet and Shower (unisex)

  - Janitor's Closet, with utility sink and storage.

- Mechanical Room, located at the South and adjacent to the Electrical Room; accessible only from the exterior through personnel double doors. Within the Mechanical Room is Compressor Room where the compressor equipment and air tank for tools use are located.

- Electrical Room, located at the South and adjacent to the Mechanical Room; accessible only from the exterior through a personnel door.

- Communications (Comm.) Room, located centrally at the North and accessible only from the exterior through a personnel door.

- Interior Hallway accessed via exterior personnel doors from the South and from the East that connects the common areas with the major functional areas of the building. A double drinking fountain (handicap accessible) is contained within the interior hallway.

4.3 Exterior Character

The building's exterior design shall be in conformance with the existing architectural character in the Northwest Field – PACAF Regional Training Center (PRTC), Andersen Air Force Base, Guam. The prevailing character in this location is austere and simple. This can be achieved with the use of pre-cast (tilt-up) concrete exterior walls and parapets, low-sloped concrete roof slabs with elastomeric roofing membrane, aluminum doors, aluminum windows, and aluminum typhoon shutters. The exterior colors and trims shall be in accordance with the Andersen Air Force Base Architectural Compatibility and Base Design Standards.

Horse logo of the RED HORSE Squadron shall be stamped in concrete wall above main entrance at the east side to match surrounding facilities occupied by the squadron.

- **ROOFING SYSTEM**

  Roof systems shall be watertight and compatible with facility function, construction, and service conditions. Provide complete roof system design and construction services for the entire new facility roof system, including all ancillary and incidental work necessary for a complete, new, watertight roof system installation. The minimum roof slope for positive drainage shall be ½:12.

  Components of a minimum roof submittal shall include the roof plan, method of drainage, standard details and details unique to the project, wind load calculations and requirements.

  Built-in gutter systems where drainage passes through an interior space or is concealed in the exterior cavity wall shall be prohibited.

  - **Roof Coverings: Low Slope Roofing Systems**

Wind Uplift - The complete roof covering assembly shall be rated in accordance with FM P7825, capable of withstanding an uplift pressure as determined by ASCE-7 and FM I-49 for perimeter and flashing attachment.

Fire Safety - Complete roof covering assembly shall meet requirements of ASTM E 108, Class 1A or UL790; and be listed as Fire-Classified roof deck construction in UL RMSD or Class I roof deck construction in FM P7825c.

Liquid Applied Elastomeric Roofing Membrane shall be a 60 MM thick, fluid-applied roofing membrane with a minimum of 10 year warranty installed on top of the structural concrete roof deck. The roof coating system shall conform to the requirements of the Andersen Air Force base Architectural Compatibility and Base Design Standards for low slope roofs.

- **Roof Insulation**

  Roof insulation with a minimum r-value of R-38 shall be provided on the underside of the roof. Roof insulation shall be batt, spray-on or rigid type and shall include vapor barrier.

- **Flashings And Trim**

  Flashing and sheet metal work shall be provided as required to ensure completely watertight systems. Flashings shall be stainless steel. Stainless Steel shall be in accordance with ASTM A136, Type 302 or 304. Flashing shall be installed in accordance with manufacturer's printed installation instructions.

- **Downspouts**

  Provide stainless steel downspouts compatible with roofing material and finish. Concealed (interior) gutters and downspouts are prohibited. Downspouts shall be sized per applicable plumbing and building codes.

- **Other Roofing Components**

  Provide lightning protection, without penetrating the roof membrane or flashing components. Lightning protection component penetrations and attachment shall be sealed and flashed and anchored in a permanent manner and in manner to avoid the degradation of the watertight integrity of the roofing system. Do not apply mastic sealant on the roofing membrane. All roofing fasteners, connectors, etc. shall be stainless steel.

- **EXTERIOR WALLS**

The exterior walls of the building shall be reinforced concrete. Cast-in-place or pre-cast concrete construction is acceptable systems for this project provided the

structural design complies with the above paragraph General Systems Requirements.

- **Insulation And Vapor Retarder**

  Provide rigid insulation (with a minimum r-value of R-13) and vapor barrier inside the cavity of perimeter wall furring. The perimeter wall furring on the interior face of the exterior walls shall be constructed of steel channels and paperless gypsum wallboard or cement board.

- **Parapets**

  Provide parapets for exterior wall construction, where required for low-slope roofs.

- **Coatings**

  Provide parapets for exterior wall construction, where required for low-slope roofs. Provide concrete exterior walls with DAEFS (direct-applied exterior finish system) paint finish. Color of exterior walls shall be Antique Linen (Federal Standard 595, color 23578). Trim color shall be Signal Red (Federal Standard 595, color 22144). Rollup-door shall be painted Signal Red.

- **Exterior Joint Sealants**

  Provide exterior application of joint sealants to seal joints and prepare for finish material installation.

- **Screen Wall**

  Provide concrete masonry units screen walls to conceal mechanical units. Screen walls shall be designed in accordance with the Andersen Air Force Base Architectural Compatibility and Base Design Standards. Screen walls shall be provided with a chain link gate and openable chain-link covering at top.

- **EXTERIOR WINDOW SYSTEMS**

Exterior window units shall be dark bronze, anodized aluminum, fixed panes. The window frame and glazing shall meet applicable AT/FP criteria. Storm shutters type shall be in accordance with the Andersen Air Force Base Architectural Compatibility and Base Design Standards.

All exterior windows will have typhoon shutters that are exterior mounted with a heavy-duty aluminum or stainless steel sheet-metal barrier with a perforation pattern allowing for optimum light penetration and airflow, as well as unobstructed views from the interior or exterior. The typhoon shutter system will be rated to withstand 190 mph wind speed.

The shutter system will be electro-statically painted with modified acrylic polyester enamel applied over pretreated aluminum.

- **EXTERIOR DOORS**

The personnel entrance doors to the interior hallway shall be an aluminum storefront system. Other exterior personnel doors to the shop areas shall be swinging aluminum doors and frame. All exterior doors shall be provided with a dark bronze anodized finish. The door and frame systems shall comply with Andersen Air Force Base, Architectural Compatibility and Base Design Standards. Door hardware will be heavy duty stainless steel. The key locks will be compatible with the Best Lock corporation removable core keying system and be compatible with the AAFB master keying system. Each of the building's main entrances shall be provided with a cipher lock.

The sidelites of the storefront system and the main entrance will have typhoon shutters that are exterior mounted with a heavy-duty accordion aluminum type shutters with recessed tracks, accordion shutters shall be stacked on both sides and keep sidelite glass unobstructed view from the interior or exterior. The typhoon shutter system will be rated to withstand a 190mph wind speed. The shutter system will be electro-statically painted with modified acrylic polyester enamel applied over pretreated aluminum.

TABLE 4.1 – SPACE TABULATION

Room No.	Room Name	Net Areas on Notional Floor Plan	
		SF	SM
101	HVAC Shop	1,584.00	147.15
102	HVAC Tool Room	261.00	24.25
103	HVAC Training Room	130.00	12.08
104	HVAC NCOIC Office	130.00	12.08
105	Refrigerant Storage	32.00	2.97
106	Metal Shop	1,965.00	182.55
107	Structures NCOIC Office	134.00	12.45
108	Structures Training Room	134.00	12.45
109	Metal Shop Welding Room	456.00	42.36
110	Oxygen Tank Storage	12.00	1.11
111	Acetylene Tank Storage	12.00	1.11
112	Structures Tool Room	1,780.00	165.36
113	Carpentry Shop	1,903.00	176.79
114	Utilities Shop	1,587.00	147.43
115	Chemicals Storage	53.00	4.92
116	Utilities Tool Room	311.00	28.89
117	Utilities NCOIC Office	130.00	12.08
118	Utilities Training Room	130.00	12.08
119	Electrical Shop	1,586.00	147.34
120	Electrical NCOIC Office	130.00	12.08
121	Electrical Training Room	130.00	12.08

122	Electrical Tool Room	300.00	27.87
123	Hallway	1,203.00	111.76
124	Copy Room	140.00	13.01
125	Mechanical Room	447.00	41.53
126	Electrical Room	180.00	16.72
127	CBT(Computer-BasedTraining)Room	304.00	28.24
128	Break/Conference Room	446.00	41.43
129	Supplies Storage	40.00	3.72
130	Men's Toilet and Shower	304.00	28.24
131	Women's Toilet and Shower	136.00	12.63
132	ADA-compliant Toilet and Shower	90.00	8.36
133	Communications Room	110.00	10.22
134	Janitor's Room	70.00	6.50
135	Compressor Room	72.00	6.69
	Subtotal Net Area	16,432.00	1,526.53
	Net to Gross Area Factor	1.07	1.07
	Actual Gross Area	17,602.00	1,635.23
	Authorized Gross Area (DD Form 1391)	17,602.00	1,635.23

End of 4.0 Building Requirements

5.0 ROOM REQUIREMENTS

5.1 – Building Materials

Building materials shall be in accordance with the Architectural Compatibility and Base Design Standards, Andersen Air Force Base, Guam, dated October 2006 and as indicated herein. The design-build Contractor shall coordinate with the Contracting Officer to confirm any subsequent issues and modifications to the Architectural and Base Design Standards, as applicable to this project, prior to the submittal of the proposal.

- **Perimeter Interior Walls**

  The inside face of the all perimeter walls within air-conditioned spaces shall be provided with furring consisting of 89mm (3-½ inch) steel channels and 16mm (5/8-inch) thick paperless gypsum wallboard, except at the following spaces where cement board shall be provided at the first 2400mm (8'-0") from the finish floor:
  - HVAC Tool Room
  - Structures Tool Room
  - Utilities Tool Room
  - Electrical Tool Room

  The cavity within the furring shall be filled with batt thermal insulation.

- **Window Treatment**

  Provide perimeter windows with vertical blinds manufactured from extruded PVC.

Color of vertical blinds shall be white.

- **Floors**

Non-slip, chemical-resistant epoxy floor finish shall be provided at all floor surfaces, except for the following spaces:
- Men's Toilet and Showers
- Women's Toilet and Shower
- ADA-Compliant Toilet and Shower
- Mechanical Room
- Electrical Room
- Comm. Room

All Toilets and showers shall be provided with glazed, non-slip ceramic floor tiles. Mechanical, Electrical and Comm. Rooms floor shall have concrete sealer with non-slip surface.

- **Base**

Wall bases at spaces with epoxy floor coating shall have epoxy coating compatible and integrated with the epoxy floor coating. Wall bases at spaces with ceramic floor tiles shall have coved ceramic tiles.

- **Interior Doors**

In general, interior personnel doors shall be solid core wood door with oak veneer facing, stained, with galvanized metal door frames. Vertical lites, (150 x 600mm) 6" x 24" shall be provided in interior doors from the Hallway into the following spaces:

- HVAC Shop
- Metal Shop
- Carpentry Shop
- Utilities Shop
- Electrical Shop Are
- Copy Room
- Computer-Based Training (CBT) Room
- Break/Conference Room

- **Door Hardware**

Doors shall be provided with heavy-duty stainless steel hardware. Door hardware shall be as manufactured by BEST LOCK SYSTEM, or approved equal. Locksets shall be key-removable types. Exterior personnel entry doors shall be equipped with mechanical cipher locks. A master key system shall be provided as approved by the Contracting Officer. Lever type locksets will be provided for areas accessible to the physically handicapped. The Comm. Room shall be provided with GSA X09 Lock-set.

- **Interior Walls**

  Non-load bearing interior walls shall be paperless gypsum wallboard on galvanized metal studs. Load-bearing walls shall be reinforced concrete or concrete masonry units.

- **Ceilings**

  Provide acoustical ceiling tiles, 610 x 610 x 16mm (24 x 24 x 5/8 inch), with square-edge, on lay-in suspended metal grid for Hallway, NCOIC Offices, Training Rooms, Break/Conference Room, Computer-Based Training (CBT) Room and Copy Room.

  Provide water-resistant, paperless gypsum board on suspended metal ceiling framing system for all toilets, Janitor's Room and Storage Room.

  The insulation on the underside of the roof structure shall be painted where there are no ceilings at the following spaces:
  - HVAC Shop
  - Metal Shop
  - Metal Shop Welding Area
  - Carpentry Shop
  - Utilities Shop Area
  - Electrical Shop Area
  - Mechanical Room
  - Compressor Room
  - Electrical Room
  - Comm. Room
  - Storage areas

- **Systems Office Furniture**

  Modular system furniture, with built-in electric, telephone and computer provisions, shall be consistent with the Andersen AFB Architectural compatibility and Base Design Standards.

- **Toilets and Shower Fixtures and Accessories**

  Lavatory countertops: Provide standard built-in lavatory countertops and backsplash with solid surfacing. All solid surfacing, solid polymer vanity top components shall be fabricated from a minimum 13 MM (1/2 inch) thick material. Counter tops shall be complete with 102 MM (4 inch) high permanently attached, coved transition backsplash and end splashes.

  Soap dispensers: Surface mounted liquid soap dispensers shall be stainless steel with satin finish. Soap dispensers shall be conveniently located above countertop, adjacent to each sink.

Lavatory mirror: Mirrors shall be tempered glass, wall-mounted with stainless steel frame. The lavatory mirrors shall span the full length of the lavatory countertop.

Electric hand-dryer: Toilets shall be provided with wall-mounted, white enamel electric hand dryers with chrome push-button, multi-directional diffusers.

Toilet partitions and urinal screens: Toilet and urinal partitions shall be solid phenolic resin type. Toilet partitions shall be floor-mounted type and urinal screen shall be wall-mounted type. Color shall be mid gray.

Toilet tissue dispensers, sanitary napkin disposal units, shower curtains, shower curtain rods, shower benches, robe hooks, mop racks, grab bars and other required toilet accessories shall be provided and comply with the applicable design criteria and standards listed under Para 2.4, appropriate design of this RFP document.

- **Cabinets and Counters**

  Provide wall and base custom-quality casework that are permanently built in-place. Provide hardwood frames; all ends, bottoms, backs, and partitions shall be hardwood plywood. Cabinet doors and drawer fronts shall be either plywood or medium density fiberboard cores with solid edge bands. Provide standard built-in countertops and backsplash with solid surfacing. All solid surfacing, solid polymer components shall be fabricated from a minimum 13mm (1/2-inch) thick material. Counter tops shall be complete with 102mm (4-inch) high permanently attached, coved transition backsplash and end splashes.

- **Lockers**

  Lockers shall be wardrobe, single-tier type and in accordance with the requirements of the Andersen Air Force Base Architectural Compatibility and Base Design Standards. Provide metal lockers with custom color (red) as specified by end-user.

5.2 Interior Finish and Color Schedule

Interior finishes and colors shall be in accordance with the Architectural Compatibility and Base Design Standards, Andersen Air Force Base, Guam, dated October 2006, and as indicated in Para 2.4, Appropriate Design, of this RFP document. The design-build Contractor shall coordinate with the Contracting Officer to confirm any subsequent issues and modifications to the Architectural and Base Design Standards as applicable to this project, prior to the submittal of the proposal.

Room No	Room Name	Floor	Wall			Ceiling		
			Material	Wall Base	Wainscot	Material	Ceiling Height	
							Metric	English
101	HVAC Shop	Epoxy	CPL	Epoxy	None	EXP1	-	-
102	HVAC Tool Room	Epoxy	CPL, CB1	Epoxy	None	EXP1	-	-

103	HVAC Training Room	Epoxy	CPL, CB1	Epoxy	None	ACST	2700	9’-0”
104	HVAC NCOIC Office	Epoxy	CPL, CB1	Epoxy	None	ACST	2700	9’-0”
105	Refrigerant Storage	Epoxy	CPL	None	None	EXP1	2400	8’-0”
106	Metal Shop	Epoxy	CPL	Epoxy	None	EXP1	-	-
107	Structures NCOIC Office	Epoxy	CPL, CB1	Epoxy	None	ACST	2400	8’-0”
108	Structures Training Room	Epoxy	CPL, CB1	Epoxy	None	ACST	2400	8’-0”
109	Metal Shop Welding Room	Epoxy	CPL	Epoxy	None	EXP1	-	-
110	Oxygen Tank Storage	Epoxy	CPL	None	None	EXP1	2400	8’-0”
111	Acetylene Tank Storage	Epoxy	CPL	None	None	EXP1	2400	8’-0”
112	Structures Tool Room	Epoxy	CPL, CB1	Epoxy	None	EXP1	-	-
113	Carpentry Shop	Epoxy	CPL	Epoxy	None	EXP1	-	-
114	Utilities Shop	Epoxy	CPL	Epoxy	None	EXP1	-	-
115	Chemicals Storage	Epoxy	CPL	None	None	EXP1	2400	8’-0”
116	Utilities Tool Room	Epoxy	CPL, CB1	Epoxy	None	EXP1	-	-
117	Utilities NCOIC Office	Epoxy	CPL, CB1	Epoxy	None	ACST	2700	9’-0”
118	Utilities Training Room	Epoxy	CPL, CB1	Epoxy	None	ACST	2700	9’-0”
119	Electrical Shop	Epoxy	CPL	Epoxy	None	EXP1	-	-
120	Electrical NCOIC Office	Epoxy	CPL, CB1	Epoxy	None	ACST	2700	9’-0”
121	Electrical Training Room	Epoxy	CPL, CB1	Epoxy	None	ACST	2700	9’-0”
122	Electrical Tool Room	Epoxy	CPL, CB1	Epoxy	None	EXP1	-	-
123	Hallway	Epoxy	CPL	Epoxy	None	ACST	3050	10’-0”
124	Copy Room	Epoxy	CPL, CB1	Epoxy	None	ACST	2700	9’-0”
125	Mechanical Room	CS	CPL	None	None	EXP1	-	-
126	Electrical Room	CS	CPL	None	None	EXP1	-	-
127	CBT (Computer-Based Training) Room	Epoxy	CPL	Epoxy	None	ACST	2700	9’-0”
128	Break/Conference Room	Epoxy	CPL, CB1	Epoxy	None	ACST	2700	9’-0”
129	Supplies Storage	Epoxy	CPL, CB1	Epoxy	None	EXP1	2700	9’-0”
130	Men’s Toilet and Shower	CT1	CT2,3,4	CT2,3,4	CT2,3,4	GWB1	2400	8’-0”
131	Women’s Toilet and Shower	CT1	CT2,3,4	CT2,3,4	CT2,3,4	GWB1	2400	8’-0”
132	ADA-compliant Toilet and Shower	CT1	CT2,3,4	CT2,3,4	CT2,3,4	GWB1	2400	8’-0”
133	Communications Room	CS	CPL, CB1	None	None	EXP1	3050	10’-0”
134	Janitor's Room	Epoxy	CPL, CB1	Epoxy	None	GWB1	-	-
135	Compressor Room	CS	CPL, CB1	None	None	Exp1	-	-

Material & Color Notes:

KEY	DESCRIPTION
ACST	Acoustical tile, 610 MM x 610 MM (24 inch x 24 inch), with square edge, lay-in Grid Color: White
CB1	Cement board, painted. Color: Eggshell white
CB2	Cement board, painted. Color: White
CPL	Cement plaster, painted. Color: Eggshell white
CS	Concrete sealer. Color: Clear
CT1	Ceramic tile floor, 203 MM x 203 MM (8 inch x 8 inch). Color: Sierra Vail
CT2	Ceramic tile (wainscot or wall), 102 MM x 102 MM (4 inch x 4 inch). Color:

	Almond
CT3	Ceramic tile accent, 102 MM x 102 MM (4 inch x 4 inch). Color: Green
CT4	Ceramic tile accent, 102 MM x 102 MM (4 inch x 4 inch). Color: Burgundy
Epoxy	Epoxy with broadcast silica aggregate, medium profile for added slip resistance. Color: Gray
Exp 1	Exposed underside of roof and structural members, painted. Color: White
GWB1	Water-resistant gypsum wallboard, painted. Color: White (glossy finish)
Rubber	Rubber base, 102 MM (4 inch) high. Color: Black

5.3 Signage

Signage design, including typography, graphics and sign placement shall be in accordance with the Architectural Compatibility and Base Design Standards, Andersen Air Force Base.

- **Exterior Signage**

  The Design-Build Contractor shall coordinate the location and signage requirements (building number, name of organization, logos, etc) with the Contracting Officer.

- **Interior Signage**

  Ensure that an interior signage schedule and details are incorporated into the contract documents. Coordinate signage design and selection with the Architectural Compatibility and Base Design Standards, Andersen Air Force Base. The facility shall be provided with signage which meets current ADA-ABA requirements with regard to Braille, raised characters. finishes (contrast), type size, and mounting height. Signage design shall comply with UFC 3-120-01, Air Force Sign Standard.

  Interior signage design shall indicate a directory indicating room locations, typical signs/signage details, and a signage schedule to include room numbers and corresponding room designations.

- **Organizational Emblems**

  This image is the RED HORSE Chinese HORSE Head, and should be inset into the concrete façade near the southern entrance to the RED HORSE HQ Engineering facility. The size and dimensions will match the surrounding RED HORSE facilities.

5.4 Technical Room Requirements

Room No. 101 – HVAC SHOP

Space Characteristics

Function/adjacencies:
Maintenance and repair shop for HVAC equipment used in cantonment operations. Direct adjacency to exterior is required. Direct adjacency to the HVAC Training Room, HVAC NCOIC Office, HVAC Tool Room and Hallway on the interior is required. Adjacency to the Metal Shop Area is ideal.

Special Dimensions:
Ideal Plan Dimensions: Per Notional Drawings, to accommodate HVAC Shop Equipment with adequate operating clearances.
Minimum Ceiling Height: No ceiling, but clearance for overhead crane required.

Acoustics: N/A.

Access: Personnel door from exterior, and from interior Hallway. Overhead coiling door from exterior for all-terrain forklift equipment loading and unloading.

Number of Occupants: Five (total number of personnel assigned to HVAC unit).

Other/Special Requirements: See below:

Uniformat Section	Description	Qty	Size	Specific Requirements
D1030	Overhead Crane	1	5 tons	Verify minimum vertical clearance with end users.
C1020	Coiling Doors and Grilles	1	4.2m x 4.2m	Motorized with manual override. Provide insulation to achieve minimum R-value as needed.
C1030	Lockers	8	610 x 610mm	Single-tier (1.83m-high), industrial grade, metal with rust proof custom color (red) coating.

Room No. 102 – HVAC Tool Room

Space Characteristics

Function/adjacencies:
Storage for HVAC tools and equipment.

Special Dimensions:
Ideal Plan Dimensions: Per Notional Drawings, to accommodate modular warehouse storage shelving with adequate clearances.
Minimum Ceiling Height: 3.05 M (10'-0")

Acoustics: N/A

Access: Personnel double door from HVAC Shop.

Number of Occupants: None (unoccupied space).

Other/Special Requirements: None.

Room No. 103 – HVAC Training Room

Space Characteristics

Function/adjacencies:
Enclosed private room for training purposes. Activities include reading, instruction (one-on-one), computer-use, reference storage.

Special Dimensions:
Ideal Plan Dimensions: Per Notional Drawings, to accommodate one desk set (w/task chair, return and drawers), one lateral file cabinet, one 5-tier open shelving unit.
Minimum Ceiling Height: 2.7 M (9'-0")

Acoustics: STC Rating of 45 for walls, ceiling, door and window.

Access: Personnel door from HVAC Shop.

Number of Occupants: Two (one trainee and one instructor).

Other/Special Requirements: See below:

Uniformat Section	Description	Qty	Size	Specific Requirements
C1030	Visual Display Boards	1	1.22 x 2.44m	Wall-mounted whiteboard and accessories.
E2010	Window Treatment	1	To fit window area	Vertical blinds, PVC, white.

Room No. 104 – HVAC NCOIC Office

Space Characteristics

Function/adjacencies:
Enclosed private room for administrative purposes. Activities include reading, consultation, computer-use, reference storage.

Special Dimensions:
Ideal Plan Dimensions: Per Notional Drawings, to accommodate one desk set (w/task chair, return and drawers), one lateral file cabinet, one 5-tier open shelving unit.

Minimum Ceiling Height: 2.7 M (9'-0")

Acoustics: STC Rating of 45 for walls, ceiling, door and window.

Access: Personnel door from HVAC Shop.

Number of Occupants: Two (NCOIC and one guest).

Other/Special Requirements: See below:.

Uniformat Section	Description	Qty	Size	Specific Requirements
E2010	Window Treatment	1	To fit window area	Vertical blinds, PVC, white.

Room No. 105 – Refrigerant Storage

Space Characteristics

Function/adjacencies:
Enclosed storage space for refrigerant used in HVAC maintenance operations only.

Special Dimensions:
Ideal Plan Dimensions: Per Notional Drawings, to accommodate three containers of refrigerant.
Minimum Ceiling Height: 2.4 M (8'-0")

Acoustics: N/A

Access: Personnel double doors from exterior.

Number of Occupants: None (unoccupied space)

Other/Special Requirements: None.

Room No. 106 – Metal Shop

Space Characteristics

Function/adjacencies:
Maintenance and repair shop for metalwork and equipment used in cantonment operations. Direct adjacency to exterior is required. Direct adjacency to the Metal Shop Welding Area, the Structures Tool Room and the Hallway on the interior is required.

Special Dimensions:
Ideal Plan Dimensions: Per Notional Drawings, to accommodate Metal Shop Equipment with adequate operating clearances.
Minimum Ceiling Height: No ceiling, but up to 3.7 M (12'-0") clearance is ideal.

Acoustics: N/A

Access: Personnel door from exterior, and from interior Hallway. Overhead coiling door from exterior for all-terrain forklift equipment loading and unloading.

Number of Occupants: up to 25 (total number of personnel assigned to Structures Unit)

Other/Special Requirements: See below:

Uniformat Section	Description	Qty	Size	Specific Requirements
C1020	Coiling Doors and Grilles	1	4.2m x 4.2m	Motorized with manual over-ride. Provide insulation to achieve minimum R-value as needed.

Room No. 107 – Structures NCOIC Office

Space Characteristics

Function/adjacencies:
Enclosed private room for administrative purposes. Activities include reading, consultation, computer-use, reference storage.

Special Dimensions:
Ideal Plan Dimensions: Per Notional Drawings, to accommodate one desk set (w/task chair, return and drawers), one lateral file cabinet, one 5-tier open shelving unit.
Minimum Ceiling Height: 2.7 M (9'-0")

Acoustics: STC Rating of 45 for walls, ceiling, door and window.

Access: Personnel door from Metal Shop.

Number of Occupants: Two (NCOIC and one guest).

Other/Special Requirements: See below:

Uniformat Section	Description	Qty	Size	Specific Requirements
E2010	Window Treatment	1	To fit window area	Vertical blinds, PVC, white.

Room No. 108 – Structures Training Room

Space Characteristics

Function/adjacencies:
Enclosed private room for training purposes. Activities include reading, instruction (one-on-one), computer-use, reference storage.

Special Dimensions:
Ideal Plan Dimensions: Per Notional Drawings, to accommodate one desk set (w/task chair, return and drawers), one lateral file cabinet, one 5-tier open shelving unit.
Minimum Ceiling Height: 2.7 M (9'-0")

Acoustics: STC Rating of 45 for walls, ceiling, door and window.

Access: Personnel door from HVAC Shop.

Number of Occupants: Two (one trainee and one instructor).

Other/Special Requirements: See below:

Uniformat	Description	Qty	Size	Specific Requirements

Section				
C1030	Visual Display Boards	1	1.22 x 2.44m	Wall-mounted whiteboard and accessories.

Room No. 109 – Metal Shop Welding Room

Space Characteristics

Function/adjacencies:
Enclosed area exclusively for welding activities.

Special Dimensions:
Ideal Plan Dimensions: Per Notional Drawings, to accommodate Welding machine and other welding equipment with adequate operating clearances.
Minimum Ceiling Height: No ceiling, but up to 3.7 M (12'-0") clearance is ideal.

Acoustics: N/A

Access: Overhead coiling door from exterior, personnel double door from Metal Shop.

Number of Occupants:

Other/Special Requirements: See below:

Uniformat Section	Description	Qty	Size	Specific Requirements
C1020	Coiling Doors and Grilles	1	4.2m x 4.2m	Motorized with manual over-ride. Provide insulation to achieve minimum R-value as needed.

Room No. 110 – Oxygen Tank Storage

Space Characteristics

Function/adjacencies:
Enclosed storage space for oxygen tanks used in metalwork operations only.

Special Dimensions:
Ideal Plan Dimensions: Per Notional Drawings, to accommodate three oxygen tanks.
Minimum Ceiling Height: 2.4 M (8'-0")

Acoustics: N/A

Access: Personnel door from exterior.

Number of Occupants: None (unoccupied space)

Other/Special Requirements: None.

Room No. 111 – Acetylene Tank Storage

Space Characteristics

Function/adjacencies:
Enclosed storage space for acetylene tanks used in metalwork operations only.

Special Dimensions:

Ideal Plan Dimensions: Per Notional Drawings, to accommodate three acetylene tanks.
Minimum Ceiling Height: 2.4 M (8'-0")

Acoustics: N/A

Access: Personnel door from exterior.

Number of Occupants: None (unoccupied space)

Other/Special Requirements: None.

Room No. 112 – Structures Tool Room

Space Characteristics

Function/adjacencies:
Storage for tools and equipment used in the Carpentry and Metal Shops.

Special Dimensions:
Ideal Plan Dimensions: Per Notional Drawings, to accommodate modular warehouse storage shelving with adequate clearances for handcarts.
Minimum Ceiling Height: No ceiling, but full-height modular shelving is ideal.

Acoustics: N/A

Access: Personnel double door from HVAC Shop.

Number of Occupants: None (unoccupied space).

Other/Special Requirements: See below:

Uniformat Section	Description	Qty	Size	Specific Requirements
C1030	Lockers	25	610 x 610mm	Single-tier (1.83m-high), industrial grade, metal with rust proof custom color (red) coating.

Room No. 113 – Carpentry Shop

Space Characteristics

Function/adjacencies:
Maintenance and repair shop for various equipment used in cantonment operations. Direct adjacency to exterior is required. Direct adjacency to the Structures Tool Room and Hallway on the interior is required. Adjacency to the Metal Shop Area is ideal.

Special Dimensions:
Ideal Plan Dimensions: Per Notional Drawings, to accommodate woodworking shop equipment with adequate operating clearances.
Minimum Ceiling Height: No ceiling, but up to 3.7 M (12'-0") clearance is ideal

Acoustics: N/A.

Access: Personnel door from exterior, and from interior Hallway. Overhead coiling door from exterior for all-terrain forklift equipment loading and unloading.

Number of Occupants: up to 25 (total number of personnel assigned to Structures Unit)

Other/Special Requirements: See below:

Uniformat Section	Description	Qty	Size	Specific Requirements
C1020	Coiling Doors and Grilles	1	4.2m x 4.2m	Motorized with manual over-ride. Provide insulation to achieve minimum R-value as needed.

Room No. 114 – Utilities Shop

Space Characteristics

Function/adjacencies:
Maintenance and repair shop for Reverse Osmosis Water Purification Units (ROWPU's) and other utility equipment used in cantonment operations. Direct adjacency to exterior is required. Direct adjacency to the Utilities Tool Room, Utilities NCOIC Office, Utilities Training Room and Hallway on the interior is required.

Special Dimensions:
Ideal Plan Dimensions: Per Notional Drawings, to accommodate ROWPUs , workbench and other utility equipment with adequate operating clearances.
Minimum Ceiling Height: No ceiling, but up to 3.7 M (12'-0") clearance is ideal

Acoustics: N/A.

Access: Personnel door from exterior, and from interior Hallway. Overhead coiling door from exterior for all-terrain forklift equipment loading and unloading.

Number of Occupants: up to 7 (total number of personnel assigned to Utilities Unit)

Other/Special Requirements: See below:

Uniformat Section	Description	Qty	Size	Specific Requirements
C1020	Coiling Doors and Grilles	1	4.2m x 4.2m	Motorized with manual over-ride. Provide insulation to achieve minimum R-value as needed.
C1030	Lockers	10	610 x 610mm	Single-tier (1.83m-high), indus-trial grade, metal with rust proof custom color (red) coating.

Room No. 115 – Chemicals Storage

Space Characteristics

Function/adjacencies:
Enclosed storage space for chlorine (powdered form) and other chemicals used in utilities maintenance operations only.

Special Dimensions:
Ideal Plan Dimensions: Per Notional Drawings, to accommodate prefabricated hazardous materials cabinet.
Minimum Ceiling Height: 2.4 M (8'-0")

Acoustics: N/A

Access: Personnel double door from exterior.

Number of Occupants: None (unoccupied space)

Other/Special Requirements: None.

Room No. 116 – Utilities Tool Room

Space Characteristics

Function/adjacencies:
Storage for Utilities tools and equipment.

Special Dimensions:
Ideal Plan Dimensions: Per Notional Drawings, to accommodate modular warehouse storage shelving with adequate clearances.
Minimum Ceiling Height: 3.05 M (10'-0")

Acoustics: N/A

Access: Personnel double door from Utilities Shop.

Number of Occupants: None (unoccupied space).

Other/Special Requirements: None

Room No. 117 – Utilities NCOIC Office

Space Characteristics

Function/adjacencies:
Enclosed private room for administrative purposes. Activities include reading, consultation, computer-use, reference storage.

Special Dimensions:
Ideal Plan Dimensions: Per Notional Drawings, to accommodate one desk set (w/task chair, return and drawers), one lateral file cabinet, one 5-tier open shelving unit.
Minimum Ceiling Height: 2.7 M (9'-0")

Acoustics: STC Rating of 45 for walls, ceiling, door and window.

Access: Personnel door from Utilities Shop.

Number of Occupants: Two (NCOIC and one guest).

Other/Special Requirements: See below:

Uniformat	Description	Qty	Size	Specific Requirements

Section				
E2010	Window Treatment	1	To fit window area	Vertical blinds, PVC, white.

Room No. 118 – Utilities Training Room

Space Characteristics

Function/adjacencies:
Enclosed private room for training purposes. Activities include reading, instruction (one-on-one), computer-use, reference storage.

Special Dimensions:
Ideal Plan Dimensions: Per Notional Drawings, to accommodate one desk set (w/task chair, return and drawers), one lateral file cabinet, one 5-tier open shelving unit.
Minimum Ceiling Height: 2.7 M (9'-0")

Acoustics: STC Rating of 45 for walls, ceiling, door and window.

Access: Personnel door from HVAC Shop.

Number of Occupants: Two (one trainee and one instructor).

Other/Special Requirements: None

Uniformat Section	Description	Qty	Size	Specific Requirements
C1030	Visual Display Boards	1	1.22 x 2.44m	Wall-mounted whiteboard and accessories.

Room No. 119 – Electrical Shop

Space Characteristics

Function/adjacencies:
Maintenance and repair shop for various electrical equipment used in cantonment operations. Direct adjacency to exterior is required. Direct adjacency to the Electrical Tool Room, Electrical NCOIC Office, Electrical Training Room and Hallway on the interior is required.

Special Dimensions:
Ideal Plan Dimensions: Per Notional Drawings, to accommodate workbench and various electrical equipment with adequate operating clearances.
Minimum Ceiling Height: No ceiling, but up to 3.7 M (12'-0") clearance is ideal

Acoustics: N/A.

Access: Personnel door from exterior, and from interior Hallway. Overhead coiling door from exterior for all-terrain forklift equipment loading and unloading.

Number of Occupants: up to 8 (total number of personnel assigned to Electrical Unit)

Other/Special Requirements: See below:

Uniformat Section	Description	Qty	Size	Specific Requirements

C1020	Coiling Doors and Grilles	1	4.2m x 4.2m	Motorized with manual over-ride. Provide insulation to achieve minimum R-value as needed.
C1030	Lockers	10	610 x 610mm	Single-tier (1.83m-high), industrial grade, metal with rust proof custom color (red) coating.

Room No. 120 – Electrical NCOIC Office

Space Characteristics

Function/adjacencies:
Enclosed private room for administrative purposes. Activities include reading, consultation, computer-use, reference storage.

Special Dimensions:
Ideal Plan Dimensions: Per Notional Drawings, to accommodate one desk set (w/task chair, return and drawers), one lateral file cabinet, one 5-tier open shelving unit.
Minimum Ceiling Height: 2.7 M (9'-0")

Acoustics: STC Rating of 45 for walls, ceiling, door and window.

Access: Personnel door from Utilities Shop.

Number of Occupants: Two (NCOIC and one guest).

Other/Special Requirements: See below:

Uniformat Section	Description	Qty	Size	Specific Requirements
E2010	Window Treatment	1	To fit window area	Vertical blinds, PVC, white.

Room No. 121 – Electrical Training Room

Space Characteristics

Function/adjacencies:
Enclosed private room for training purposes. Activities include reading, instruction (one-on-one), computer-use, reference storage.

Special Dimensions:
Ideal Plan Dimensions: Per Notional Drawings, to accommodate one desk set (w/task chair, return and drawers), one lateral file cabinet, one 5-tier open shelving unit.
Minimum Ceiling Height: 2.7 M (9'-0")

Acoustics: STC Rating of 45 for walls, ceiling, door and window.

Access: Personnel door from HVAC Shop.

Number of Occupants: Two (one trainee and one instructor).

Other/Special Requirements: See below:

Uniformat Section	Description	Qty	Size	Specific Requirements

C1030	Visual Display Boards	1	1.22 x 2.44m	Wall-mounted whiteboard and accessories.

Room No. 122 – Electrical Tool Room

Space Characteristics

Function/adjacencies:
Storage for Electrical tools and equipment.

Special Dimensions:
Ideal Plan Dimensions: Per Notional Drawings, to accommodate modular warehouse storage shelving with adequate clearances.
Minimum Ceiling Height: 3.05 M (10'-0")

Acoustics: N/A

Access: Personnel double door from Utilities Shop.

Number of Occupants: None (unoccupied space).

Other/Special Requirements: None

Room No. 123 - Hallway

Space Characteristics

Function/adjacencies:
Interior corridor connecting the Structures unit, the HVAC unit, the Utilities unit, the Electrical unit and the common spaces within the facility.

Special Dimensions:
Ideal Plan Dimensions: Per Notional Drawings, with minimum clear width of 2.1 M (7'-0").
Minimum Ceiling Height: 3.05 M (10'-0")

Acoustics: STC Rating of 45 for walls, ceiling, door and window

Access: Personnel entry doors from the exterior and personnel doors to the various spaces off the hallway.

Number of Occupants: None (unoccupied)

Other/Special Requirements: See below:

Uniformat Section	Description	Qty	Size	Specific Requirements
C1030	Fittings – Interior Identifying Devices	1 lot	Standard	Signage for all spaces within the facility. Provide signage at exterior entry doors as required by end-users.

Room No. 124 – Copy Room

Space Characteristics

Function/adjacencies:
Enclosed room with floor space for copier, fax machine and other office equipment connected to the office network, and built-in base and wall cabinet for storage and countertop work area. Direct adjacency from interior Hallway is required, and proximity to Computer-Based Training (CBT) Room, the Structures unit, the HVAC unit, the Utilities unit, the Electrical unit is preferred.

Special Dimensions:
Ideal Plan Dimensions: Per Notional Drawings, to accommodate copier, fax machine and other office equipment with operating clearances.
Minimum Ceiling Height: 2.7 M (9'-0")

Acoustics: STC Rating of 45 for walls, ceiling, door and window

Access: Personnel door from Hallway.

Number of Occupants: None (unoccupied)

Other/Special Requirements: See below:

Uniformat Section	Description	Qty	Size	Specific Requirements
C1030	Cabinets	1	Standard	Storage cabinets comprised of base cabinets with solid surface countertop and wall-hung wall cabinets.

Room No. 125 – Mechanical Room

Space Characteristics

Function/adjacencies:
Space for air-conditioning, ventilation, fire protection and related equipment. Central location within the building is required for efficient and economical distribution. Location within the south perimeter wall is required for adjacency to site utilities (water, sewer) connections.

Special Dimensions:
Ideal Plan Dimensions: Per Notional Drawings, to accommodate various mechanical equipment with minimum and operating clearances.
Minimum Ceiling Height: no ceiling.

Acoustics: N/A. Vibration and noise generated by equipment in the mechanical room may affect adjacent occupied spaces; verify that minimum STC ratings on the adjacent rooms are provided and maintained.

Access: Personnel double doors from the exterior.

Number of Occupants: None (unoccupied)

Other/Special Requirements: See below:

Uniformat Section	Description	Qty	Size	Specific Requirements
B3010	Roof hatch and caged ladder	1	Standard	Roof hatch to withstand design wind loads.

Room No. 126 – Electrical Room

Space Characteristics

Function/adjacencies:
Space for electrical equipment. Central location within the building is required for efficient and economical electrical distribution. Location within the south perimeter wall is required for adjacency to site power connection.

Special Dimensions:
Ideal Plan Dimensions: Per Notional Drawings, to accommodate various electrical equipment with minimum and operating clearances.
Minimum Ceiling Height: no ceiling.

Acoustics: N/A.

Access: Personnel door from the exterior.

Number of Occupants: None (unoccupied)

Other/Special Requirements: None.

Room No. 127 – Computer-Based Training (CBT) Room

Space Characteristics

Function/adjacencies:
Training room with computer stations. Activities include computer use, instruction, and reading.

Special Dimensions:
Ideal Plan Dimensions: Per Notional Drawings, to accommodate modular-type computer stations.
Minimum Ceiling Height: 2.7 M (9'-0")

Acoustics: STC Rating of 55 for walls, ceiling, door and window

Access: Personnel door from Hallway.

Number of Occupants: up to 19 trainees in individual (computerized) workstations.

Other/Special Requirements: See below:

Uniformat Section	Description	Qty	Size	Specific Requirements
C1030	Visual Display Boards	1	1.22 x 2.44m	Wall-mounted whiteboard and accessories.

Room No. 128 – Break/Conference Room

Space Characteristics

Function/adjacencies:
Area for preparing and eating light snacks, and for meetings, with built-in base and wall cabinets, kitchen sink, space for refrigerator and microwave oven. Direct adjacency from Hallway is required, and proximity to toilets and Computer-Based Training (CBT) Room is ideal.

Special Dimensions:
Ideal Plan Dimensions: Per Notional Drawings, to accommodate up to 24 persons.
Minimum Ceiling Height: 2.7 M (9'-0")

Acoustics: STC Rating of 55 for walls, ceiling, door and window

Access: Personnel door from Hallway

Number of Occupants: up to 25 (total number of personnel in the facility)

Other/Special Requirements: See below:

Uniformat Section	Description	Qty	Size	Specific Requirements
C1030	Visual Display Boards	1	1.22 x 2.44m	Wall-mounted whiteboard and accessories.
C1030	Cabinets	1	Standard	Storage cabinets comprised of base cabinets with solid surface countertop and wall-hung wall cabinets.
E2010	Window Treatment	1	To fit window area	Vertical blinds, PVC, white.

Room No. 129 – Supplies Storage

Space Characteristics

Function/adjacencies:
Enclosed storage space for dry goods and office supplies. Direct adjacency to Break/Conference Room required.

Special Dimensions:
Ideal Plan Dimensions: Per Notional Drawings.
Minimum Ceiling Height: 2.7 M (9'-0")

Acoustics: N/A

Access: Personnel door from Break/Conference Room.

Number of Occupants: None (unoccupied)

Other/Special Requirements: None.

Room No. 130 – Men's Toilet and Shower

Space Characteristics

Function/adjacencies:
Toilet and showers exclusive for men. Direct adjacency from Hallway is required and proximity to all spaces is ideal.
Special Dimensions:
Ideal Plan Dimensions: Per Notional Drawings.
Minimum Ceiling Height: 2.7 M (9'-0")

Acoustics: STC Rating of 45 for walls, ceiling and door

Access: Personnel door from Hallway.

Number of Occupants: None (unoccupied)

Other/Special Requirements: See below:

Uniformat Section	Description	Qty	Size	Specific Requirements
E2010	Furnishings – Fixed Seating	1 Lot	Standard, to fit space	Water-resistant locker room bench.

Room No. 131 – Women's Toilet and Shower

Space Characteristics

Function/adjacencies:
Toilet and showers exclusive for women. Direct adjacency from Hallway is required and proximity to all spaces is ideal.
Special Dimensions:
Ideal Plan Dimensions: Per Notional Drawings
Minimum Ceiling Height: 2.7 M (9'-0")

Acoustics: STC Rating of 45 for walls, ceiling and door

Access: Personnel door from Hallway.

Number of Occupants: None (unoccupied)

Other/Special Requirements: See below:

Uniformat Section	Description	Qty	Size	Specific Requirements
E2010	Furnishings – Fixed Seating	1 Lot	Standard, to fit space	Water-resistant locker room bench.

Room No. 132 – ADA-Compliant Toilet and Shower

Space Characteristics

Function/adjacencies:
Unisex toilet and shower (for men or women). Direct adjacency from Hallway is required and proximity to all spaces is ideal.
Special Dimensions:
Ideal Plan Dimensions: Per Notional Drawings, to allow wheelchair, handicapped use.
Minimum Ceiling Height: 2.7 M (9'-0")

Acoustics: STC Rating of 45 for walls, ceiling and door

Access: Personnel door from Hallway.

Number of Occupants: None (unoccupied)

Other/Special Requirements: See below:

Uniformat Section	Description	Qty	Size	Specific Requirements
C1030	Fittings –Toilet and Bath Accessories	1 Lot	Standard	Stainless steel grab bars for ADA-compliant shower stall.

Room No. 133 – Communications Room

Space Characteristics

Function/adjacencies:
Enclosed room for telecommunications equipment. Central location within the building is required for efficient and economical distribution. Location within the north perimeter wall is required for adjacency to site telecommunications connection.

Special Dimensions:
Ideal Plan Dimensions: 3.05 M (10'-0") X 2.35 M (11'-0")
Minimum Ceiling Height: 3.05 M (10'-0")

Acoustics: N/A

Access: Double personnel door from Structures Tool Room.

Number of Occupants: None (unoccupied)

Other/Special Requirements: No gypsum board on walls (furring) and ceiling; concrete preferred. Provide on all walls 19-millimeter (0.75-inch) plywood backboards from no greater than 0.3 meter (1 foot) above the finished floor level to no less than 2.1 meters (7 feet) above the finished floor level. Refer to ETL 02-12 – Communications and Information Systems Criteria.

Room No. 134 – Janitor's Closet

Space Characteristics

Function/adjacencies:
Enclosed room for janitorial/cleaning supplies storage and washing. Central location within the building is preferred.

Special Dimensions:
Ideal Plan Dimensions: Per Notional Drawings, to accommodate slop sink and storage shelving.
Minimum Ceiling Height: 3.05 M (10'-0")

Acoustics: N/A

Access: Personnel door from Hallway.

Number of Occupants: None (unoccupied)

Other/Special Requirements: See below:

Uniformat Section	Description	Qty	Size	Specific Requirements
C1030	Storage Shelves	1	Standard	One-tier, wall-mounted with hooks for cleaning supplies.

Room No. 135 – Compressor Room

Space Characteristics

Function/adjacencies:
Space for air compressor and air tank for tools. Location within the Mechanical Room is required.

Special Dimensions:
Ideal Plan Dimensions: Per Notional Drawings, to accommodate air compressor equipment and air tank with minimum and operating clearances.
Minimum Ceiling Height: no ceiling.

Acoustics: N/A. Vibration and noise generated by equipment in the Compressor Room may affect adjacent occupied spaces; verify that minimum STC ratings on the adjacent rooms are provided and maintained.

Access: Personnel doors from the Mechanical Room.

Number of Occupants: None (unoccupied)

Other/Special Requirements: See below:

End of 5.0 - Room Requirements

6. ENGINEERING SYSTEMS REQUIREMENTS

A10 FOUNDATIONS

SYSTEM DESCRIPTION

Provide the building foundation system in accordance with UFC 3-301-01, *Structural Engineering*. Foundation shall be designed to suit subsurface conditions, and shall be capable of transmitting all building loads to the ground.

See Section B10, *Superstructure*, for additional loading criteria.

In addition, design the structure in accordance with the following loading criteria:

Live Loads

Superimposed Live Loads: Minimum live loads as specified in the UFC or as required to support special equipment loads (whichever is greater):

Occupancy or Use**: II, Standard Facility**

Uniform Live load: **0.96 kPa (20 psf)**

Uniform Floor Live Load**: 4.79 kPa (100 psf)**

Wind Load calculated in accordance to UFC 1-200-01 and AAFB Design Standards:
Wind Speed for main wind force resisting system :
274 kph (170 mph) per the AAFB Requirement

Wind Speed for components and cladding:
305 kph (190 mph per AAFB Design Standard)

Importance Factor (IW) : **1.15**

Wind Exposure Factor : **C (AAFB Design Requirement)**

Topographic Factor: **1.80 (escarpment)**

Seismic Load calculated in accordance to UFC 1-200-01:

Occupancy Category: **II, Standard Facility**
Seismic Use: **Group I**
Importance Factor (IE):**1.0**
Site Classification : **Site Class C (as determined from Geotechnical Engineering investigation)**

S_S 0.2 second spectral acceleration :**1.50 g**
S_1 1.0 second spectral acceleration :**0.60 g**

Subsurface soil information, including a geotechnical report is included in other portions of this RFP.

Any included subsurface data and information is only for the Contractor's information and is not guaranteed to fully represent all subsurface conditions. The Government shall not be responsible for any interpretation or conclusion by the Contractor drawn from the data or information. Subsurface conditions may have changed substantially since development of the geotechnical report included in the RFP. Changed conditions may include among others, excavation of material, and filling of the site with loose material of all types. Due to these possible changes, the surface of the ground may not be natural ground as it relates to stripping and excavating prior to placement of structural fill, or any other operation related to the ground surface.

Any geotechnical report included with site investigation data is provided only to better convey data (boring logs, testing, etc.) or to document observed site conditions. The assumptions, analysis, and recommendations of the accompanying report were developed for preliminary planning purposes only. Requirements stated in Parts 3 and 4 of the RFP take precedence over any content of any included geotechnical report.

The Contractor is required to retain a geotechnical engineer experienced and licensed in the geographic region of the project to interpret the provided data as related to his design concept and develop requirements for bidding.

Minor variations between boring should be anticipated. The contractor shall bear all cost associated with the site preparation and actual foundation except as allowed by the contract clause FAR 52.236-2, "*Differing Site Conditions".* The Contractor's Geotechnical Engineer shall perform additional subsurface investigation as required to adequately determine all applicable geotechnical factors including the type and capacity of the project foundations. The contractor's Geotechnical Engineer shall consider the provided information and any additional information obtained and prepared report as described in other portion of this RFP.

A10 GENERAL

The Contractor shall commission the services of a geotechnical engineer registered as a Professional Engineer and experienced with the soils in the Geographic region of the project.

Seismic Site Classification shall be determined in accordance with UFC 3-310-04, *Seismic Design for Buildings*.

A1010 STANDARD FOUNDATIONS

See "System Description" above. The foundation construction may include cast-in-place continuous wall footing and isolated column footings foundation system meeting the requirements of this section. Columns and pilasters will be supported on spread footings.

The sub-grade below the natural ground elevations will be stripped and excavated to 600mm (12 inches) and replaced with compacted structural fill. The structural fill will extend 1524mm (60 inches) beyond the footing limits.

Waterproofing shall be applied to walls and columns below finish grades.

Reinforced masonry (CMU) walls will be used for the mechanical equipment enclosure and electrical transformer enclosure.

--End of Section—

6. ENGINEERING SYSTEMS REQUIREMENTS

B10 SUPERSTRUCTURE

SYSTEM DESCRIPTION

Provide the building framing system in accordance with UFC 3-301-01, *Structural Engineering*.

In addition, design the structure in accordance with the following loading criteria:

Live Loads

Live loads for occupancies or uses not provided in UFC 3-310-01 shall be as follows:

In addition, design the structure in accordance with the following loading criteria:

Live Loads

Superimposed Live Loads: Minimum live loads as specified in the UFC or as required to support special equipment loads (whichever is greater):

Occupancy or Use**: II, Standard Facility**

Uniform Live load: **0.96 kPa (20 psf)**

Uniform Floor Live Load**: 4.79 kPa (100 psf)**

Wind Load calculated in accordance to UFC 1-200-01 and AAFB Design Standards:

Wind Speed for main wind force resisting system :
274 kph (170 mph) per the AAFB Requirement

Wind Speed for components and cladding:
305 kph (190 mph per AAFB Design Standard)

Importance Factor (IW) : **1.15**

Wind Exposure Factor : **C (AAFB Design Requirement)**

Topographic Factor: **1.80 (escarpment)**

Seismic Load calculated in accordance to UFC 1-200-01:

Occupancy Category: **II, Standard Facility**
Seismic Use: **Group I**
Importance Factor (IE):**1.0**
Site Classification (assumed): **Site Class C** (assumed
Site classification must be verified by geotechnical investigation)

S_S 0.2 second spectral acceleration :**1.50 g**
S_1 1.0 second spectral acceleration :**0.60 g**

B1010 SLAB-ON-GRADE FLOOR CONSTRUCTION

The slab-on-grade floor construction shall include cast-in-place reinforced concrete slabs with welded wire fabric (wwf) or deformed reinforcing bars, and supported on compacted base course and vapor barrier.

B1020 WALL, COLUMNS, BEAMS, AND ROOF CONSTRUCTION

The structure is a box-type reinforced concrete shear wall building. Concrete wall is cast-in-place or pre-cast wall panels as indicated on the drawings; columns and beams shall be cast-in-place reinforced concrete. The roof of the building over the majority of the building spaces is anticipated to be concrete roof decking constructed with 150 mm (6-inch) cast-in-place reinforced concrete metal decking on steel joist and steel girders as indicated in the Part 6 "*Attachments"* of this RFP documents.

Contractor may have an option to use other type of construction. They should be designed to support gravity load (DL + LL) and at the same time resist lateral forces, such as earthquakes and wind.

--End of Section--

6. ENGINEERING SYSTEMS REQUIREMENTS

B20 EXTERIOR ENCLOSURE

SYSTEM DESCRIPTION

This system consists of the exterior shell of the facility, which includes all vertical and horizontal exterior closure such as exterior walls, exterior windows, and exterior doors. This system excludes roofing (See System B30, *Roofing*). Load bearing exterior walls will be included here, and not in System B10, *Superstructure*. Structural frame elements at exterior such as columns, beams, and spandrels are included in Superstructure, with only the applied exterior finishes (e.g., paint, stucco) being included here. Finishes to the inside face of walls which are not an integral part of the wall construction will be included in System C30, *Interior finishes*.

GENERAL SYSTEMS REQUIREMENTS

B2010 EXTERIOR WALLS

The primary exterior material of the buildings shall be reinforced cast-in-place concrete or precast concrete.

B201001 EXTERIOR CLOSURE

Provide reinforced cast-in-place concrete or precast concrete exterior wall closure.

Direct-applied Exterior Finishing System (DA-EFS) may be used as the primary exterior wall finish material.

B201003 INSULATION AND VAPOR RETARDER

Provide batt, spray-on or rigid insulation and vapor barriers at air-conditioned spaces. Provide insulation with the necessary thickness/R-values to achieve performance requirements, or a minimum of R-13.

B201004 PARAPETS

Provide parapets for exterior wall construction.

B201005 EXTERIOR LOUVERS & SCREENS

Provide exterior louvers and screens, where required, that match the finish of the existing windows and detailed to integrate with the architecture of the building, as appropriate to the design of the building.

Provide typhoon shutters for exterior windows and door glazing in accordance with the Andersen Air Force Base Architectural Compatibility and Base Design Standards

B201009 EXTERIOR PAINTING AND COATINGS

Provide field applied exterior coatings for all items that are not prefinished, and to prefinished items when required to provide a color other than a standard prefinished color.

B201010 EXTERIOR JOINT SEALANTS

Provide exterior application of joint sealants to seal joints and prepare for finish material installation.

B201012 SCREEN WALL

Provide screen walls where required to screen mechanical units and electrical equipment. Screen walls shall be designed in accordance with the Andersen Air Force Base Architectural Compatibility and Base Design Standards.

B2020 EXTERIOR WINDOWS

As much as practical, windows shall be provided in each area of the building that is

regularly occupied, to enhance the working environment, without compromising visual acuity and comfort. Natural daylighting is preferred. Exterior windows shall be prefinished aluminum. Windows shall meet Antiterrorism requirements.

B202001 WINDOWS

Determine the construction of security windows by evaluating the project program security requirements, using the Mil Hdbk 1013/1A, *Design Guidance for Physical Security of Facilities*, to define window requirements.

Windows shall be prefinished aluminum fixed.

B202002 STOREFRONTS

Storefronts shall prefinished aluminum.

B202004 EXTERIOR GLAZING

Glazing color for storefronts, exterior doors and windows shall be bronze-tint, Low-E, laminated, impact resistant reflective glass. Glazing shall comply with the requirements of the Andersen Air force Base Architectural Compatibility and Base Design Standards and UFC 4-010-01.

B2030 EXTERIOR DOORS

Provide solid door assemblies other than at the main entrance. Exterior doors and frames shall be non-corroding prefinished aluminum. Provide aluminum exterior doors and frames with tinted glazing, and hardware compatible with other buildings on the base and wall opening elements such as lintels, sills, through-wall flashings, and joint sealers. Glazing shall match window glazing and comply with the requirements of UFC 4-010-01 and Andersen Air force Base Architectural Compatibility and Base Design Standards.

B203002 GLAZED DOORS

Glazed Doors - Provide Exterior Glazed Doors and Entrances System. including factory-finish, aluminum framed door assemblies with insulated, tinted glazing, frames, and hardware compatible with other buildings on the base and wall opening elements such as lintels, sills, through-wall flashings, and joint sealers.

B203004 OVERHEAD AND ROLL-UP DOORS

Overhead roll-up doors shall be NAGDM 102 Industrial designation, and designed to withstand 170 MPH wind load.

Doors for vehicle entrances shall be rolling service type. Doors shall have automatic operation with manual override. Doors shall be operated by three-button electric power conforming to NEMA MG 1, NEMA ICS 1, NEMA ICS 2, and NEMA ICS 6. with auxiliary

hand chain operation.

B203008 EXTERIOR DOOR HARDWARE

Provide the services of a certified door hardware consultant to prepare the door hardware schedule.
Provide hardware keying compatible with the existing base-wide keying system. Replacement interchangeable cores shall be compatible with BEST LOCK SYSTEM.

Door hardware finish shall be chrome-plated brass or bronze, or stainless steel.

Main personnel entry doors shall be provided with mechanical cipher locks.

Hinges for exterior doors shall be stainless steel.

--End of Section—

6. ENGINEERING SYSTEMS REQUIREMENTS

B30 ROOFING

B30 GENERAL SYSTEM DESCRIPTION

Roof systems shall be watertight and compatible with facility function, construction, and service conditions. Provide complete roof system design and construction services for the entire new facility roof system, including all ancillary and incidental work necessary for a complete, new, watertight roof system installation.

Submittal Requirements: Components of a minimum roof submittal shall include the roof plan, method of drainage, standard details and details unique to the project, wind load calculations and requirements.

Built-in gutter systems where drainage passes through an interior space or is concealed in the exterior cavity wall shall be prohibited.

Refer to UFC 3-110-03, *Roofing*, and UFC 3-100-10N, *Architecture*, for additional roofing requirements.

B3010 ROOF COVERINGS

B301002 LOW SLOPE ROOFING SYSTEMS

Wind Uplift - The complete roof covering assembly shall be rated in accordance with FM P7825, capable of withstanding an uplift pressure as determined by ASCE-7 and FM I-49 for perimeter and flashing attachment.

Fire Safety - Complete roof covering assembly shall meet requirements of ASTM E 108, Class 1A or UL 790; and be listed as Fire-Classified roof deck construction in UL RMSD or Class I roof deck construction in FM P7825c.

Liquid Applied Elastomeric Roofing Membrane shall be a 60mil thick, fluid-applied roofing membrane with a minimum of 10 year warranty installed on top of the structural concrete roof deck. The roof coating system shall conform to the requirements of the Andersen Air Force base Architectural Compatibility and Base Design Standards for low slope roofs.

B301003 ROOF INSULATION

Provide spray-on polyurethane insulation on the underside of the roof structure with a minimum R-38 R-value.

B301004 FLASHINGS AND TRIM

Flashing and sheet metal work shall be provided as required to ensure completely watertight systems. Flashings shall be stainless steel. Stainless Steel shall be in accordance with ASTM A167, Type 302 or 304. Flashing shall be installed in accordance with manufacturer's printed installation instructions.

B301005 DOWNSPOUTS

Provide stainless steel downspouts compatible with roofing material and finish. Concealed (interior) downspouts are prohibited. Downspouts shall be sized per applicable plumbing and building codes. Provide calculations to determine capacity and size of downspouts.

B301006 ROOF OPENINGS AND SUPPORTS

Provide insulated roof hatch with integrated ladder safety extension.

B301090 OTHER ROOFING

Provide lightning protection, without penetrating the roof membrane or flashing components. Lightning protection component penetrations and attachment shall be sealed and flashed and anchored in a permanent manner and in manner to avoid the degradation of the watertight integrity of the roofing system. Do not apply mastic sealant on the roofing membrane. All roofing fasteners, connectors, etc. shall be stainless steel.

Concrete canopies at exterior walls shall be coated with elastomeric coating on top horizontal surfaces, side vertical surfaces and bottom horizontal surfaces up to the drip edge.

--End of Section--

6. ENGINEERING SYSTEMS REQUIREMENTS

C10 INTERIOR CONSTRUCTION

SYSTEM DESCRIPTION

Interior construction includes interior partitions, interior doors, and fittings.

Provide durable construction appropriate to the buildings use as a technical training and workshop facility. Acoustic properties of materials, as well as durability, shall be considered during material selection.

GENERAL SYSTEMS REQUIREMENTS

C1010 PARTITIONS

Interior non-load bearing partitions shall be of galvanized metal studs with paperless gypsum board on each side, or concrete masonry units with paperless gypsum board on finished sides.

Load-bearing interior partitions shall be constructed of pre-cast (tilt-up) concrete.

Concrete mixture shall provide an average compressive strength of 4000 PSI (27,579 kPa) and meet or exceed ACI 301/301M.

C101001 FIXED PARTITIONS

Provide fixed interior partitions. Sound-rated partition assemblies shall have a minimum Sound Transmission Coefficient (STC) of 45 in accordance with ASTM E 90 or ASTM E 413 for frequency data.

C101006 GLAZED PARTITIONS & STOREFRONTS

Provide glazed storefront system.

C1020 INTERIOR DOORS

C102001 STANDARD INTERIOR DOORS

In general, interior doors shall be flushed type, solid core with oak veneer facing, custom grade, stained, with galvanized hollow metal door frames.

C102002 GLAZED INTERIOR DOORS

Provide vision glazing in doors where it is required by the “Room Requirements” portion of this RFP, or it is deemed advantageous to be able to see through the door, either for

safety of pedestrian traffic, or other functional reason.

C102003 FIRE DOOR

Provide ¾ hour fire-rated, self-closing door where required.

Fire-rated door shall be hollow core galvanized metal door with galvanized metal frame.

C102007 INTERIOR DOOR HARDWARE

Interior door locks shall have interchangeable cores and shall match the BEST LOCK SYSTEM. Door hardware finish shall be chrome-plated brass, or bronze, or stainless steel.

The Comm Room shall be provided with a GSA X09 lockset.

C1030 SPECIALTIES

C103001 COMPARTMENTS, CUBICLES, & TOILET PARTITIONS

Provide phenolic core toilet partitions in all toilet rooms with more than one water closet or urinal. Provide toilet accessories as indicated in Chapter 3, “Room Requirements” portion of this RFP.

C103002 TOILET AND BATH ACCESSORIES

Provide toilet and bath accessories.

C103003 MARKER BOARDS AND TACK BOARDS

Provide marker boards and tack boards.

C103004 IDENTIFYING DEVICES

All necessary interior signage shall be incorporated as part of the architectural drawings. Interior signage is not collateral equipment. Interior signage shall demonstrate complete coordination with the facility design, SID and FF&E submittals. Provide interior directional signage as required for facility way finding. Provide an identifying device at each interior door. Signs must meet Andersen Air Force Base Architectural Compatibility and Base Design Standards and ADA requirements.

C103005 LOCKERS

Provide lockers. Lockers shall be metal construction and enamel, custom-color (red) finish.

C103006 SHELVING

Provide steel utility shelving at Janitor's Room and Supplies Storage.

C103007 FIRE EXTINGUISHER CABINETS

Provide fire extinguisher cabinets. Cabinet shall be semi-recessed in new construction and surface-mounted in new mechanical/electrical spaces and existing wall construction. Cabinets shall be coordinated with interior finishes.

C103008 COUNTERS

Provide solid-surface (solid acrylic) counter tops and back splashes.

C103009 CABINETS

Provide cabinetry and millwork items with associated accessories. Cabinetry shall be AWI premium grade and have concealed hinges with adjustable standards for shelves. All exposed surfaces will be hardwood veneer with exposed edges of solid hardwood.

Provide specific cabinetry as shown on the Room Requirements Sheets.

C103010 CASEWORK

Provide specific casework as shown on the Room Requirements Sheets.

C103012 FIRESTOPPING PENETRATIONS

Provide all sleeves, caulking, and flashing for fire stopping penetrations.

--End of Section--

6. ENGINEERING SYSTEMS REQUIREMENTS

C30 INTERIOR FINISHES

SYSTEM DESCRIPTION

Building materials shall be in accordance with the Architectural Compatibility and Base Design Standards, Andersen Air Force Base, Guam, dated October 2006 and as indicated herein. The design-build Contractor shall coordinate with the Contracting Officer to confirm any subsequent issues and modifications to the Architectural and Base Design Standards, as applicable to this project, prior to the submittal of the proposal.

Interior finishes include wall finishes, floor finishes, wall base finishes, and ceiling finishes.

Provide aesthetically pleasing, functional, durable finishes appropriate to the buildings function. Acoustic properties of materials, as well as durability and ease of maintenance, shall be considered during material selection. Maximize the use of sustainable materials.

GENERAL SYSTEMS REQUIREMENTS

See "Room Requirements" for specific requirements on "Interior Finishes."

C3010 WALL FINISHES

All interior wall finishes shall be as indicated in the “Room Requirements” portion of this RFP.

C3020 FLOOR FINISHES

Primary floor finish shall be chemical-resistant, industrial-grade epoxy coating with non-slip surface, except glazed, non-slip ceramic tile shall be provided in all toilets and shower areas, and concrete sealer shall be applied in the Mechanical Room, Electrical Room, Comm. Room, and storage areas.

C3030 CEILING FINISHES

Ceiling finishes shall consist of 610 MM x 610 MM x 16 MM thick (24 inch x 24 inch x 5/8 inch thick) suspended acoustical tile ceiling system in all NCOIC Offices, Training Rooms, Break/Conference Room, Computer-Based Training (CBT) Room and Copy Room; suspended paperless water-resistant gypsum board ceiling in toilets and showers.

Exposed structural systems shall be painted.

C3040 INTERIOR COATINGS AND SPECIAL FINISHES

Paint all interior exposed surfaces including metal items, such as interior grilles, registers, diffusers, access panels, and panel boxes.

--End of Section--

6. ENGINEERING SYSTEMS REQUIREMENTS

D10 CONVEYING

SYSTEM DESCRIPTION

Conveying System shall include overhead cranes.

D1020 WEIGHT HANDLING EQUIPMENT

The contractor shall be responsible for coordination and ensuring that the Weight Handling Equipment (WHE) is certified by the Government Certifying Official in accordance with NAVFAC P-307 Management of Weight Handling Equipment prior to BOD.

Other testing and certification requirements detailed in Part 4 of this RFP shall be provided by the contractor to the satisfaction of the Andersen ROICC. The contractor shall coordinate witness testing with the NAVFAC Marianas CME, 36th Civil Engineering Squadron (36 CES), and 554th RED HORSE Squadron.

Certificates: For Load Chain - Submit factory certification of the load chain rated capacity.

D102002 MONORAILS

Provide a monorail with an electric powered hoist with a 5 ton capacity located in the HVAC Shop. The clear hook height shall not be less than 4,267mm (14’-0”) above the finished floor.

Hoist and Trolley - Provide electric hoist and trolley. The hoist shall have two operating speeds and shall be capable of hoisting and lowering the rated load at a high speed of 20 feet per minute (fpm) or as specified by the End-User. The trolley shall have two operating speeds and shall be capable of moving the rated load at a high speed of 50 fpm or as specified by the End-User. Actual speed(s) shall be within plus or minus 15 percent of those specified.

Hoist and trolley motors shall be two speed AC squirrel cage induction type.

Provide trolley with an electro-mechanical brake. Provide trolley brake with a minimum torque rating of 100 percent of the drive motor rated torque or as specified by the End-

User.

Controls -- Provide two speed magnetic controls for the hoist and trolley. Provide reduced voltage starting, acceleration and deceleration for the trolley drive.

The monorail system shall have a minimum rated capacity of 5 tons.

Hook Operating Lift Range - The hoist lift shall be at its highest point a minimum of 4,267mm (14'-0") above the finished floor.

--End of Section—

6. ENGINEERING SYSTEMS REQUIREMENTS

D20 PLUMBING

Refer to Part 4 Section D20 for performance requirements of the building elements included in the plumbing system.

SYSTEM DESCRIPTION

The plumbing system for this project consists of all fixtures, potable cold and hot water piping and equipment, piping insulation, water heating equipment, sanitary waste and vent piping systems, and other specialty piping and equipment within 5 foot (1.5 meter) of the building. Refer to Building Requirements, Space Tabulations Section of the Project Program for building occupancy levels.

GENERAL SYSTEM REQUIREMENTS

Provide working space around all equipment. Provide concrete pads under all equipment. Provide all required fittings, connections and accessories required for a complete and usable system. All equipment shall be installed per the criteria of PTS section D20 and the manufacturer's recommendations. Design and installation shall be in accordance with the latest edition of the IPC and UFC 3-420-01, *Plumbing Systems*. Where the word "should" is used in the manufacturer's recommendations, substitute the word "shall".

D2010 PLUMBING FIXTURES

Provide quantity and type of plumbing fixtures required for the occupancy, use, and functions described for this facility. Refer to Room Requirements Section for additional specific requirements for spaces with plumbing fixtures. Provide handicapped fixtures in accordance with the referenced criteria in the Project Program.

D201001 WATER CLOSETS

Refer to Room Requirement Section for the number and type of water closets required.

Provide floor mounted; flush valve type water closets, low flow type.

Provide handicap (ADA) floor mounted flush valve type water closets in handicapped toilets.

D201002 URINALS

Refer to Room Requirement Section for the number and type of urinals required.

Provide wall mounted, flush valve type urinals, low flow type.

Provide handicap (ADA) flush valve type urinals in handicapped toilets.

D201003 LAVATORIES

Refer to Room Requirement Section for the number and type of lavatories required.

Provide countertop lavatories with metering faucet, low flow type. Provide pop-up drain.

Provide handicap lavatories in handicap toilets.

D201004 SINKS

Refer to Room Requirement Section for the number and type of sinks required. Provide sink faucets with flow restrictors.

Provide countertop kitchen sink with two compartments in the Break room. Provide waste disposer unit.

Provide mop sink in the Janitor room.

Provide utility sinks in all shops.

D201005 SHOWERS

Refer to Room Requirement Section for the number of showers required.

Provide a one piece fiberglass (FRP) shower module, terrazzo shower floor and shower supply fittings, low flow type.

Provide ADA compliant shower set, including control valve, shower head, handles and accessories.

D201006 DRINKING FOUNTAINS AND COOLERS

Refer to Room Requirement Section for the number and type of water coolers required.

Provide electric water coolers.

Provide handicap (ADA) type electric water coolers.

D201090 EMERGENCY FIXTURES

Provide emergency shower and eyewash in each shop.

D2020 DOMESTIC WATER DISTRIBUTION

D202001 PIPES AND FITTINGS

Provide Copper tubing and fittings; type-L for above ground and type-K for buried piping.

D202002 VALVES & HYDRANTS

Provide isolation valves. Provide hose bibs in the Mechanical room, and Mech. enclosure area. Provide hose bibs along the building exterior such that all points along the perimeter can be reached with an 80 foot (24 meter) long hose.

D202003 DOMESTIC WATER EQUIPMENT

Provide backflow preventers of types and at points within domestic water systems as specified by IPC. Locate inside the mechanical room on service entrance lines where not provided exterior to the building.

Provide water meter & meter box with cover.

Provide pressure reducing valve.

Provide Heat Recovery Unit in the mech. air-cooled condenser, complete with hot water storage tank, piping and controls, for heating domestic water. Coordinate/verify capacity with mech. contractor. Provide electric water heating element to supplement the heat recovery system.

Provide in-line circulator for domestic hot water recovery system.

D202004 INSULATION & IDENTIFICATION

Provide mineral fiber insulation with vapor barrier on domestic hot water supply and recirculation piping. Provide identification for piping and equipment.

D202005 SPECIALTIES

Provide ice maker connector box for the ice maker.

Provide valve box for buried valves and water meter.

Provide washing machine connector box.

D202090 OTHER DOMESTIC WATER SUPPLY

Provide piping supports in accordance with the IPC. Provide inspections, disinfection, and testing in accordance with the IPC.

D2030 SANITARY WASTE

D203001 WASTE PIPE & FITTINGS

Provide cast iron hubless pipe and fittings for above ground installation.

Provide plastic PVC piping, fittings, and solvent cement for below ground installation.

D203002 VENT PIPE & FITTINGS

Provide cast iron hubless pipe and fittings for above ground installation.

Provide plastic PVC piping, fittings, and solvent cement for below ground installation.

D203003 FLOOR DRAINS

Provide in mechanical rooms, restrooms, and all shops.

Comm. Room shall be provided with floor drain at center of room. Floor shall be sloped for drainage. Drain shall be equipped with odor-proof drain cap to prevent backflow of odors from sewer. Drain cap shall be removable for use during typhoon flooding.

D2040 RAIN WATER DRAINAGE

D204001 PIPE & FITTINGS

Provide Cast iron hubless pipe and fittings above ground. Provide PVC piping, fittings, and solvent cement below ground.

D204002 ROOF DRAINS

Provide roof drains that are compatible with the roofing system.

D204090 OTHER RAIN WATER DRAINAGE SYSTEM

Not used.

D2090 OTHER PLUMBING SYSTEMS

D209001 SPECIAL PIPING SYSTEMS

Radon piping: Provide underground perforated piping for Radon mitigation. Provide PVC pipe manifold with riser terminating above the roof. Make provision so that an in-line exhaust fan can be inserted in the riser in the future if it becomes necessary. Coordinate with electrical to provide junction box for fan power supply.

Refer to ETL 1110-3-348, Indoor Radon Prevention and Mitigation.

D209005 COMPRESSED AIR SYSTEM (NON – BREATHING)

Provide air compressor, refrigerated air dryer and receiver. Provide piping and compressed air drops with quick disconnects throughout the work areas to allow connection of equipment such as pneumatic tools and air guns.

--End of Section—

6. ENGINEERING SYSTEMS REQUIREMENTS

D30 HVAC

Refer to Part 4 Section D30 for performance requirements of the building elements included in the HVAC system. Refer to Para. 2.3.1 “Sustainable Design” for LEED & EPACT 2005 compliance requirements.

SYSTEM DESCRIPTION

Provide a Variable Air Volume (VAV) air conditioning system for this facility that attains the following objectives: Occupant comfort, Indoor air quality, Acceptable noise levels, Energy efficiency, Reliable operation, and Ease of maintenance. Design and installation shall be in accordance with the latest edition of the IMC and UFC 3-400-10N, Mechanical Engineering. Refer to Building Requirements, Space Tabulations Section of the Project Program for building occupancy levels.

Any combination of equipment that attains these goals, and meets the requirements outlined below, will be acceptable.

Economizer cycles shall not be used.

GENERAL SYSTEM REQUIREMENTS

Provide working space around all equipment. Provide all required fittings, connections and accessories required for a complete and usable system. All equipment shall be installed per the criteria in PTS Section D30 and the manufacturer's recommendations. Where the word "should" is used in manufacturer’s instructions, substitute the word "shall".

Provide air conditioning for spaces as indicated and for the following Design conditions:

Outside Conditions

Summer	89	Degrees F dry bulb	Winter	72	Degrees F

	32	Degrees C dry bulb		22	Degrees C
	78	Degrees F wet bulb			
	26	Degrees C wet bulb			

Inside Conditions: Offices, common areas, break room, CBT training room, electrical and mechanical room, tool room and structure tool room and storage rooms.

Summer	75	Degrees F dry bulb	Winter	68	Degrees F
	23.8	Degrees C dry bulb		20	Degrees C
	50-60	%RH			

Inside Conditions: Comm. Room

Summer	64-75	Degrees F dry bulb	Winter	68	Degrees F
	17.8-23.8	Degrees C dry bulb		20	Degrees C
	30-55	%RH			

Provide Ventilation rates and systems per the latest edition of ASHRAE Standard 62.1, *Ventilation for Acceptable Indoor Air Quality*.

Provide ventilation for all the shops.

Zone the HVAC system as follows:

1. The office, common areas, break room, CBT training room, electrical and mechanical room, tool room, structures tool room, and storage room shall be a separate zone.

2. The Comm. room shall be a separate zone, with supplement supply from the unit supplying the Main facility. Maintain positive pressure with a minimum air change rate of once per hour.

Provide minimum 6-inch (150 mm) thick concrete housekeeping pads and vibration isolators under all floor-mounted equipment.

All mechanical equipment shall have painted finishes that pass a salt-spray test conducted per ASTM B117 for duration of at least 500 hours.

All outside mechanical equipment HVAC cooling/heating and condenser coils shall be provided with an immersion applied, baked phenolic coating system or other approved coating that passes the 3000 hour resistance test using the ASTM E-117-90 procedure. The heat transfer rating shall be as installed.

D3030 COOLING GENERATING SYSTEMS

D303001 DIRECT EXPANSION SYSTEMS

Provide air-cooled direct expansion (DX) ducted split system, with variable frequency drive air handling unit for the main facility.

Provide air-cooled direct expansion (DX) ductless split system, with wall-hung fan-coil unit for the Comm. Room.

D3040 DISTRIBUTION SYSTEMS

D304001 AIR DISTRIBUTION, HEATING & COOLING

Provide insulated, galvanized steel ductwork constructed, braced, reinforced, installed, supported, and sealed per the IMC and SMACNA standards.

Provide a Variable Air Volume (VAV) system using ducted returns and sound attenuators. VAV units shall be located above ceilings and allow for maintenance and removal of units through ceiling tiles.

Provide VAV Units.

Provide grilles, registers, and diffusers.

D304007 EXHAUST SYSTEMS

Provide ductwork constructed, braced, reinforced, installed, supported, and sealed per the IMC and SMACNA standards.

Provide ducted exhaust ventilation systems and exhaust fans to serve all ventilated zones of the facility. Provide in-line centrifugal exhaust fan for the toilets; minimum capacity of 75 cfm per water closet or urinal. Provide dust collector system and exhaust fan in the carpentry shop and metal shop, in accordance with the requirements of the

Industrial Ventilation Handbook by ACGIH and UFC 3-400-10N, Industrial Ventilation.

D304008 AIR HANDLING UNITS

Provide central station variable volume air handler for the Main facility. Provide with 95% (MERV 14) filters.

Provide with ultraviolet disinfection system.

D304090 OTHER DISTRIBUTION SYSTEMS

Provide modulating motorized outside air make-up volume damper controlled by CO2 sensor.

Provide centrifugal, in-line type, ducted exhaust fan for the welding exhaust hood, utility shops, metal shop, carpentry shop, structures tool room, HVACs shop, and electrical shop.

D3060 CONTROLS AND INSTRUMENTATION

D306001 HVAC CONTROLS

D306001 1.1 DIRECT DIGITAL CONTROLS (DDC)

Provide a complete Direct Digital Control (DDC) system for the facility.

D3070 SYSTEMS TESTING AND BALANCING

Provide complete Testing and Balancing (TAB) of all air distribution systems and HVAC equipment.

D307003 HVAC COMMISSIONING

Refer to Project Program section 2.3.3 for Building Commissioning requirements. Mechanical systems to be commissioned, if provided, include HVAC systems and controls and domestic hot water systems.

D3090 OTHER HVAC SYSTEMS AND EQUIPMENT

D309001 GENERAL CONSTRUCTION ITEMS

Provide seismic restraints and Comply with the Force Protection Criteria.

D309090 OTHER SPECIAL MECHANICAL SYSTEMS

Provide industrial ventilation system in accordance with UFC 3-400-10N.

Provide heat pipe energy recovery in the air handling system.

Provide carbon dioxide sensors to operate the outside air damper. Carbon dioxide concentration shall not exceed maximum limits per ASHRAE Standard 62.

Provide outside air intakes in accordance with Standard 16, UFC 4-010-01 for new buildings.

Provide emergency air distribution shut-off switch in accordance with Standard 18, UFC 4-010-01.

-- End of Section--

6. ENGINEERING SYSTEMS REQUIREMENTS

D40 FIRE PROTECTION

Refer to Part 4 Section D40 for performance requirements of the building elements included in the fire protection systems.

SYSTEM DESCRIPTION

Provide an integrated fire alarm and mass notification system, and suppression system capable of notifying building occupants and controlling any fire that may start inside the facility.

GENERAL SYSTEM REQUIREMENTS

Provide working space around all equipment. Provide concrete pads under all equipment. Provide all required fittings, connections and accessories required for a complete and usable system. All equipment shall be installed per the criteria of PTS section D40 and the manufacturer’s recommendations. Where the word "should" is used in the manufacturer's recommendations, substitute the word "shall".

All Design Documents, (i.e. Building Code/Life Safety Analysis, plans, specifications, and calculations) developed for Section D40 shall be prepared by, or under the supervision of the design/build contractor's Qualified Fire Protection Engineer, the Fire Protection Designer of Record (FPDOR).

Installation drawings, shop drawings or working plans, calculations, other required preconstruction documentation and as-built drawings shall be prepared by, or under the direct supervision of a NICET engineering technician as specified below. NICET engineering technicians shall hold a current certification as an engineering technician in the field of Fire Protection Engineering Technology with minimum Level III certification in the appropriate subfield.

Provide training for the active systems consisting of two (2) eight (8)-hour sessions to accommodate all shifts of the base fire department and allow for rescheduling for un-

foreseen fire department responses.

D4010 FIRE ALARM AND DETECTION SYSTEMS

An automatic addressable fire alarm system will be provided, complete with pull stations, detectors, addressable modules for flow and tamper switches, audiovisual alarm devices, MONACO interface, batteries, and fire alarm radio transmitter, compatible with current system used at Andersen Air Force Base.
Because a fire sprinkler system will be provided, use of detectors will be kept to a minimum.

A Mass Notification system shall be integrated with the fire alarm system and provided complete with receiver and control panel compatible with current system used at Anderson Air Force Base and additional speakers and audiovisual alarms in accordance with UFC 4-021-01. Common areas will be equipped with devices and installation compliant with ADA-ABA standards.

D4020 FIRE SUPPRESSION WATER SUPPLY AND EQUIPMENT

The qualified Fire Protection Engineer employed by the contractor shall conduct fire flow & pressure tests to verify that the system comply with the fire protection requirement based on the results of hydraulic calculations.

It is presumed based on the current flow test report dated April 28, 2010 that the new water line will have sufficient flow and pressure to supply the fire sprinkler system without the need for a fire pump.

The incoming sprinkler service shall be provided with a reduced pressure principle backflow preventer.

Provide a freestanding pedestal type fire department connection located no closer than 40 ft. (12 m) from the building and accessible by fire apparatus.

D4030 STANDPIPE SYSTEMS

D4040 SPRINKLER SYSTEMS

A wet pipe sprinkler system is proposed throughout the building. The majority of the building areas will be classified as light hazard occupancy, with areas such as the shops, mechanical rooms, electrical rooms, and storage areas classified as ordinary hazard group 2 occupancies.

Provide quick-response sprinklers with ordinary temperature rating in areas with finished ceilings. Provide chrome sprinklers escutcheon plates. Provide corrosion resistant sprinklers for all non-conditioned areas.

D4050 FIRE PROTECTION SPECIALTIES

D405001 PORTABLE FIRE EXTINGUISHERS

Contractor shall provide fire extinguishers per UFC 3-600-01 at all shop areas including the hallway. Areas that are conditioned shall have recessed or semi-recessed fire extinguisher. Shop areas will have wall mounted fire extinguishers.

D4060 BUILDING

The following criteria shall be applicable to the design and construction of the project, and in the event of a conflict the order of compliance is as follows: UFC 2-600-01, National Fire Protection Association NFPA 101 - Life Safety Code, and the International Building Code (IBC). The IBC shall only be applicable to building fire resistance requirements, allowable floor areas, building height limitations, building separation distances, exterior wall fire resistance, and exterior wall opening protection. NFPA 101 shall be used to determine all egress requirements.

--End of Section—

6.0 ENGINEERING SYSTEM REQUIREMENTS

D50 ELECTRICAL

3/4” minimum conduit size shall be used as required for this project.

SYSTEM DESCRIPTION

Provide an interior electrical system consisting of

- Service Entrance Wiring and Equipment with ITRON Sentinel AMR Kilowatt-hour Demand Metering
- Distribution and Lighting Panel boards
- Lighting Control Panels
- Conduits
- Feeders
- Conduit and Wiring for Branch Circuits for Lighting
- Conduit and Wiring for Branch Circuits for General Purpose Power outlets, devices
- Telecommunications Systems, including
    - Telephone service
    - NIPRNET Service
    - SIPRNET Service with Protected Distribution System (PDS

  - Horizontal Pathways, including cable trays and ladders for Horizontal Distribution of non-SIPR Telecommunications Cables
- Cable Television
- Security and Alarm Systems
- Emergency Lighting
- Provision for Standby Power Connection
- Lightning Protection System
- Grounding

Interior distribution system shall include all components of an electrical system which shall deliver electrical service to meet requirements for a complete and useable facility. The requirements of this section cover materials and installation out to a distance of 1.5 meters (5 ft) from the building perimeter.

GENERAL SYSTEM REQUIREMENTS

Provide an Electrical System complete, in-place, tested, and approved, as specified throughout this RFP document, as needed for a complete, usable, and properly functioning facility. All electrical work shall be performed, and all electrical equipment shall be installed in compliance with the criteria of Electrical System Requirements and the manufacturer's recommendations. The word "should" in manufacturer's instructions and recommendations shall be interpreted as "shall".

Designer of Record shall utilize and comply with the reference requirements and recommendations as shown in Para. 2.4 Appropriate Design.

Interior Power Distribution System

Design Concept

Incoming service from the main pad-mounted transformer (approximately 300 KVA) will be delivered underground at 480/277 volts, 3-phase, 4-wire to the Main Service and Distribution Board in the Electric Room. Current Transformers (CT's) within a NEMA 4 Stainless Steel CT Cabinet and an ITRON Sentinel AMR Kilowatt-hour Meter will be provided at the pad-mounted transformer enclosure for monitoring electricity usage per Andersen AFB standards. Meter will be provided with wireless remote monitoring capability. Power consumption data from the wireless radio system will be used by 36 CES/CEOE.

See "Grounding" Section below for Facility Grounding System (FSG) provisions.

The interior secondary distribution system will provide 480/277 volt 3-phase, 4-wire power from the Main Service and Distribution Board in the Electric Room to large shop equipment and lighting loads. A dry-type step-down transformer in the Electrical Room

will provide a 208Y/120 volt 3-phase, 4-wire power supply for general purpose power to convenience outlets and small appliance loads.
Transient voltage surge suppressors will be provided in the main incoming service distribution panel.

~~A permanent emergency generator is not required for the facility; however, User has indicated that the following portable generators will be available for use during extended power outages:~~

- ~~200 KW / 250 KVA, 480/277 Volts, 3PH4W Unit (Note: Full Load Current = 301 Amps)~~
- ~~60 KW / 75 KVA, 208/120 Volts, 3PH4W Unit (Note: Full Load Current = 208 Amps)~~

~~For each voltage system above, provide a 3-Pole Circuit Breaker Service Disconnect in a NEMA 4 stainless steel enclosure, surface mounted on the exterior wall in a location suitable for generator connection. Provide a Manual Transfer Switch for each voltage to select between Normal Power Service and Generator Power Service.~~

A central uninterruptible power system (UPS) is not required for the facility. Small independent UPS units will be provided by the User where required for PCs or other small loads. The fire alarm and security systems will be provided with their own internal battery backup systems.

Distribution and branch circuit panel boards will have copper bussing. Panel boards will be equipped with bolt-on, molded-case circuit breakers. All panel boards will be equipped with separate ground busses.

Provide a dedicated panel for Telecommunications within the Telecomm Room fed from a 3P70A breaker in the 208/120 volt Distribution Panel. Panel for the Telecommunications Room shall be located at least 1000 mm (3.3 ft) away from the Telecomm Cabinet/ Rack and NIPR cabinets to minimize Electromagnetic Interference (EMI)

Interior Wiring System

Design Concept

Electrical wiring system will consist of insulated copper conductors in raceways. A separate, insulated, green equipment grounding conductor will be provided for each feeder and branch circuit. Raceways will be concealed whenever possible.

Electrical equipment enclosures will be NEMA Type 1 for interior locations and NEMA Type 4X for exterior locations, unless otherwise specified.

Include power connections for Government/User-supplied equipment. At this time, the Government does not have the specific list or equipment specifications for shop equipment, furniture and workstations. In order to accommodate a variety of equip-

ment, provide Non-Fused Disconnect Switch for the larger direct-connected equipment and matching receptacle and plug sets for smaller plug-and-cord connected equipment.

And to provide flexibility to accommodate constantly changing workstation types and layouts, provide power outlets liberally in the workstation areas. Shop equipment and workstations to be Government-Furnished, Government-Installed (GFGI) office system furniture.

Receptacles

Design Concept

General Requirements:

Convenience receptacles will be provided throughout the facility. Each occupy-able room will have a minimum of one receptacle on each wall. Additional receptacles will be installed, where necessary, to provide a general purpose receptacles at maximum of 3.6 meters (12 feet) on centers along each wall. In general, one quadruple receptacle will be provided for every computer workstation and desk. Workstation and equipment receptacles which are permanently installed in walls shall be mounted at 457 mm (18 inches) above the finished floor, unless determined otherwise to provide connectivity with the equipment or systems office furniture. Each of the wall-mounted receptacles shall be connected to one branch circuit to provide Owner with flexibility of extending circuit to multiple outlets within the systems office furniture. Where furniture is to be connected, receptacle will be removed, and furniture whip will be hard wired to the circuit assigned to that outlet. Telephone / Data Quad Outlets will be provided at similar locations and mounting heights corresponding to the workstation power receptacles for workstation connection unless an alternate mounting height and location is determined to be more suitable for connectivity with the systems office furniture.

Receptacles adjacent to sinks, in the exterior Mechanical Area, for drinking fountains and accessible to or at building exteriors will be ground-fault circuit interrupting type (GFCI) for personnel safety. A GFCI receptacle shall be provided for maintenance at mechanical areas. All exterior receptacles shall be weatherproof GFCI.

For personnel safety against ground shorts in electric hand tools, GFCI receptacles will be provided for Shop Work Areas at 457 mm (18 inches) above finished floor, except at 305 mm (12 inches) above workbench height where applicable; and horizontally at 1830 mm (6 ft) on center along walls. Provide GFCI duplex receptacles for washers and other wet or water handling equipment.

Receptacles adjacent to sinks shall be GFCI and provided at not less than 300 mm (12 inches) above top of sink and not less than 300 mm (12 inches) from the edge of sink.

Specific User Requirements:

Area Designation	Requirement
Exterior Entrance and Interior Entrance to - Metal Shop / Welding Room - Metal Shop Area - Structures Tool Room - Carpenter Shop Area - Utilities Shop Area - HVAC Shop Area - Electrical Shop Area	1 GFCI Receptacle inside and adjacent to Exterior and Interior Entrances
Entrance to - Comm. Room - Mechanical Room - Electrical Room - Utilities Tool Room - Electrical Tool Room - HVAC Tool Room	1 Duplex Receptacle inside and adjacent to Interior Entrance of
Main Entrance	1 GFCI Receptacle in Weatherproof box adjacent to entry.

Interior Lighting System

Design Concept

Illumination (foot-candle) levels will be provided on Part 3 of RFP document indicated as the “Room Illumination Schedule” and as recommended by the IES Lighting Handbook, subject to the requirements of MIL-HDBK-1190, and ASHRAE 90.1.

General interior illumination will be provided by fluorescent luminaires with T-8 lamps and electronic ballasts, except as otherwise noted.

Medium high bay workshop areas will be equipped with stem or pendant- mounted vapor tight T5 High Output fluorescent lamp fixtures for energy efficient illumination with dust protection.

An integrated interior automatic lighting control system consisting of occupancy sensors, combination occupancy/light switches, fluorescent luminaires with individually switched ballasts, and programmable time clock for curfew hours switching will be provided. Small assigned offices and spaces will be provided with combination occupancy sensor/light switches to control the fluorescent luminaires. The occupancy sensors in the restrooms will be the dual technology type with passive infrared (PIR) and ultrasonic sensors to help prevent them from turning the lights off while the room is occupied.

Meeting and Break rooms shall utilize recessed paralouvered or parabolic fluorescent lighting for general illumination, and recessed compact fluorescent down lights around the perimeter of the room, both fitted with dimmable fluorescent ballasts.

Emergency lighting utilizing integral battery packs in the fluorescent luminaires will be provided to illuminate exit paths. Battery units will be connected to the unswitched leg of its associated lighting branch circuit serving the area.

Provide LED type illuminated exit signs with integral battery packs will be provided for all emergency exits and passageways. LED type exit signs are provided for energy efficiency.

Lighting controls shall be provided for ensuring that all lighting can be automatically switched off during period when building is unoccupied to comply with ASHRAE 90.1.

Interior Administrative Telephone System

A Registered Communications Distribution Designer (RCDD) will be employed as part of the design team for the design of the Administrative Telephone System.

Design Concept

General Requirements:

An interior government telecomm distribution system for telephone and data will be provided. Contractor to provide cable pathways, including cable trays, cable ladder, conduit, pull wire, pull boxes, junction boxes, and outlet boxes. Contractor shall coordinate with the Government for Base Comm. Group to witness the installation of the Outside Plant (OSP) cabling, and the interior horizontal cabling, cross- connects, and terminations. The outside plant copper cables will terminate at protector blocks on the main distribution fame (MDF) in the Telecommunication Room. OSP Fiber Optic cables will also rise up and terminate at Fiber Terminations in the Telecommunications Room.

Ensure minimum clearances of 914 mm (36 inches) at the front and rear of the cabinets (racks), and 762 mm (30 inches) at the sides.

The administrative telecommunications horizontal distribution system will utilize plenum type CAT 6 UTP 24 AWG (minimum) cables. The horizontal cables will extend to Quad Outlets with 25 mm (1”) conduit and be terminated at four (4) each RJ45 jacks: two dedicated for LAN or NIPRNET; and two for voice communications. Conduit and box rough-in, and wiring and labeling shall be provided in accordance with ETL 02-12.

Interior Data Systems

Design Qualifications:

A Registered Communications Distribution Designer (RCDD) will be employed as part of the design team for the design of the Data System.

Design Concept

General Requirements:

The outside plant data fiber optic cables will terminate at cabinet mounted patch panels in the Telecommunications Room. Data systems include the NIPRNET systems. Provide NIPR system complete with cabinets, cable trays and cabling. Ensure minimum clearances of 914 mm (36 inches) at the front and rear of the cabinets (racks), and 762 mm (30 inches) at the sides.

An infrastructure system consisting of cable trays and raceways will provide the horizontal pathways for the NIPRNET horizontal cables. Provide NIPR cabinet with two (2) NEMA 5-20R duplex receptacles mounted in the floor of the NIPR cabinet, each having its own dedicated1P20A branch circuit in Telecomm Room panel.

The NIPRNET horizontal distribution system will utilize plenum type CAT 6 24AWG UTP cables run in raceways and/or cable trays. The horizontal cables will extend to and be terminated at RJ45 jacks. In Quad Outlet boxes for all rooms requiring telecommunications services, including workstations, offices, conference room, Training Classroom; and in utility areas, including Mechanical Room, Electrical Room, and Telecomm Room. Conduit and box rough-in, and wiring shall be provided in accordance with ETL 02-12. Drops in the Shops areas shall be made with rigid aluminum, rigid steel, or other plenum-rated type conduit from Telecomm Room to the drop outlet box, or from concealed cable tray to drops outlets in open exposed shop areas.

<u>Specific User Requirements:</u>

Area Designation	User Requirement
Shop Areas: Metal Shop / Welding Room - Metal Shop Area	1 ea- Duplex drop at each Exterior and Interior entrances, 48-60 inches above finished floor

- Structures Tool Room - Carpenter Shop Area - Utilities Shop Area - HVAC Shop Area - Electrical Shop Area	
Entrance to - Comm. Room - Mechanical Room - Electrical Room - Utilities Tool Room - Electrical Tool Room - HVAC Tool Room	1 ea - Duplex inside and adjacent to Interior Entrance at 48-60 inches above finished floor.
Training Rooms (Structures, Utilities, Electrical, and HVAC)	1 each Quad Outlet on two adjacent walls at height of 457 mm (18 inches)
NCOIC Offices (Structures, Utilities, Electrical, and HVAC)	1 each Quad Outlet on two adjacent walls at height of 457 mm (18 inches)
Conference Room / Break Room	Minimum of 3 Quad Outlets (1 on each wall at height of 457 mm (18 inches)
Computer Based Training Room	Minimum of 8 Quad Outlets evenly distributed along useable walls at height of 457 mm (18 inches).

<u>Other Telecommunications Requirements as follows</u>:

1. Qualifications: All installers for any part of the Telecommunications system shall be registered as Cabling Installation Technicians with the Building Industry Construction Standards Institute (BICSI), or have a minimum of three years of documented experience in the installation of copper, fiber optic, and telecommunications systems components.

2. Reference Standards for Telecomm Rooms:
   - TIA569-B
   - J-STD-607-A
   - Local and Andersen AFB Standards

3. Telecomm Room Location and Access: Telecomm Room shall be centrally located, and provided with direct exterior access.

4. Architectural:

   a. Minimum dimensions shall be 10’ x 11’. Only one Telecomm Room required for this facility.

   b. Sheetrock or Gypsum board shall not be used in the Telecommunications Room.

   c. Plywood Backboard:
      1). All wall at CER shall be covered with fire-resistant ¾-in A-C Plywood, void-free, from 12 inches to no less than 84 inches above finished floor. Plywood shall be kiln-dried to 15% maximum moisture to prevent warping. Warped panels shall not be used.

      2). Provide for cutouts in plywood backboard as follows:
      a). 2 inches beyond the edge of device plates of recessed or flush mounted devices to allow for plug-in charger adapters.
      b). 1 inch beyond the edge of light switch plates to permit removal for repair and maintenance.

      3). Telecomm Room panel will be surface mounted on plywood backboard, with conduits exposed and surface-mounted on plywood backboard.

      4). Transition from surface mounted panelboard to conduit concealed in wall shall be made beyond the edges of the plywood backboard with surface mounted conduit entering into the bottom, top or sides of a deep surface mounted junction box installed over a recessed junction box with the concealed conduit routed to the recessed outlet box..
      5). Plywood shall be secured to the wall with anchor bolts drilled into concrete or toggle bolt into metal studs.

   d. Ceiling:
      1). Concrete ceiling shall be provided with a minimum clear height of 10 ft above finished floor.
      2). Acoustic Tile ceilings shall not be used.
      3). Cabinets are 19 inches wide and 84 inches high.
      4). Clearance required:
      36 inches in front and back.

   e. Floor:
      1). Telecomm Room shall be provided with floor drain at center of room. Floor shall be sloped for drainage. Drain shall be equipped

with odor-proof drain cap to prevent backflow of odors from sewer. Drain cap shall be removable for use during typhoon flooding.

2). Floor shall be designed for 50 lbs/sf loading, or as needed for equipment to be used.

f. Finish:
1). Floors shall be finished coated with two coats of a light gray epoxy finish.
2). Walls and ceilings shall be finish coated with two coats of an anti-static, white epoxy finish.

g. Door:
1). In compliance with ETL 02-12, double-door, 72 in wide x 80 in high (without door sill), hinged to open outward.
2). A lockable door knob with exterior key, interior-pushbutton lock, and separate deadbolt lock with exterior key and interior knob operator shall be provided. Door knob and dead bolt shall be keyed alike with Base Comm. Group non-duplicatible standard.
3). Door / doorway shall be fitted with silicone rubber gasket seals and rain shield.

h. Power:
1). Provide a 100-Amp, 208/120-volt, 3-phase 4-wire, 24-circuit panel with 24 – 1P20A bolt-on type branch circuit breakers in the Telecomm Room dedicated to providing power to branch circuit lighting, telecomm equipment and device loads in the Telecomm Room. Panel shall be equipped with Transient Voltage Surge Suppressor (TVSS) protection.
2). Two dedicated 20-Amp, 120-volt, duplex receptacles shall be provided at the base of the Telecomm, each powered with a 1-Pole 20A branch circuit breaker in the Telecomm panel.
3). Convenience outlets shall be provided at 6 ft intervals along room walls, and labeled with identifying branch circuit numbers. Outlets shall be mounted at 150 mm (6 inches) above finished floor.
4). Air conditioning equipment shall not obtain power from the Telecomm Room panel.
5). Backup power: Facility will not have emergency generator backup power. However, it will be desirable for Telecomm panel to be connected to the bus section of the main distribution panel with other critical loads.
6). Grounding and Bonding: Provide as specified in ETL 02-12, UFC 3-580-01 Section 2.7, and J-STD-607-A Chapter 5 and 7. Provide up to three – 20 ft long ground rods to obtain 5 ohms maximum.
a). Ground all equipment cabinets.

a. Lighting:

1). Energy-efficient fluorescent T8 lamps with electronic ballasts with low RF emissions.
2). Provide and coordinate lighting with equipment layout in the room to provide 500 lux (50 footcandles) at 1 meter (3 ft.) above finished floor, especially at the terminal blocks.
3). Light switches shall be located adjacent to the edge of doorway nearest the door knob. Dimmer switches shall not be used.
4). Provide emergency exit lighting with battery backup.
5). Provide illuminated LED type Exit signs with battery backup.
6). Power for lighting shall be obtained from the Lighting and General Purpose Power Panel in the Electrical Room. Lighting for the Telecomm Room shall not be connected from the Telecomm room panel.

i. Environmental:
1). Dedicated air conditioning unit shall be provided for the Telecomm Room to operate 24 hours per day / 7 days per week year round to maintain the same temperature as adjacent or surrounding spaces.
2). Air conditioning unit operation shall comply with requirements of TIA-569-B-1.
3). Temperature shall be maintained from 23 – 26 degrees C (73 – 80 deg F); relative humidity shall be maintained within 50 – 70 percent.
4). Contaminants: from Table 6 of TIA-569-B-1
a). Chlorine: not greater than 0.01 ppm
b). Dust not greater than 100 microgram/cubic meter/24 hrs
c). Hydrocarbons: not greater than 4 microgram/cubic meter/24 rs
d). Hydrogen Sulfide: not greater than 0.05 ppm
e). Nitrogen Oxide: not greater than 0.1 ppm
f). Sulfur Dioxide: not greater than 0.3 ppm
5). Vibrations: Telecomm Room shall be isolated from transmitted mechanical vibrations.

j. Fire Protection:
1). Sprinkler heads shall be fitted with wire screen cages to prevent release upon accidental impact.
2). Drainage troughs shall be installed under sprinkler heads to capture and channel leaks away from equipment.

5. Interior Telecommunications:

<u>General Requirements:</u>

a. Termination of copper cables: Copper cables shall be terminated with Building Protector Blocks on Main Distribution Frame (MDF) in Telecomm

Room.

b. Provide gas protector modules in Telecomm Room to protect interior wiring and equipment from voltage surges.

c. Provide 50-pair plenum rated cable from the MDF to rack-mounted 50-pair or larger 110-block in Telecomm Cabinet.

d. Continuous lengths of Cat 6, 24AWG UTP plenum rated cable shall be used for Horizontal Distribution Cabling from the Telecomm Room to each Quad Outlet drop.

e. Cable trays will be used for the main feeds in the horizontal pathways. J-hooks can be used for branches from the main feeder runs.

f. Drops from the horizontal runs to the Quad Outlets shall be made with 1-inch conduit drops to Quad Outlets equipped with four (4) RJ45 cable outlets.

g. Cable runs from the Telecomm Room to the Quad Outlet shall not exceed 295 linear feet. Cable path inside the Telecomm Room shall not exceed 7 linear feet.

h. 4” x 4” x 2-1/4” recessed metal boxes with single-gang device ring shall be used for each recessed Quad Outlet.

i. Each comm. outlet and patch panel position shall be labeled with an identification number in accordance with TIA/EIA-606-A Figures 2, 3, 4, and 5.

j. Testing: Contractor will request for 36 CS to be present for all testing and splicing. Installation schedules for Telecommunications work shall be provided for 36 CS to witness Telecomm work at their discretion.

1). Cat 6 cables shall be tested using test equipment and procedures in compliance with TIA-568-C.1 and TIA-568-C.3. Test equipment shall have been calibrated within the past year.

Cable TV System

Design Concept

Provide a roughed-in system for future Cable TV service, consisting of conduits and boxes, and 25 mm (1-inch) conduit drops to recessed wall-mounted outlet boxes with blank covers, and with nylon pull string. Provide for six outlet locations, including Con-

ference Rooms, Training Rooms, Commander's Office, Break Room, Reception, and Lobby. Cables and service by others.

Interior Sound System

Design Concept

An interior sound reinforcement system will be provided in the classrooms. Raceways only will be
provided. Equipment will be furnished as collateral equipment. Sound system for Conference Room
described below. Public Address needs can be provided by Mass Notification System or telephone paging.

Design Concept

An interior sound reinforcement system will be provided in the classrooms. Raceways only will be
provided. Equipment will be furnished as collateral equipment. Sound system for Conference Room
described below. Public Address needs can be provided by Mass Notification System or telephone paging.

Interior Mass Notification System

Design Concept

An interior mass notification system separate from the fire alarm system and sound reinforcement system will be provided throughout the entire facility in accordance with UFC 4-021-01.

Intrusion Detection System

Design Concept
No Intrusion Detection System will be required for this facility.

Facility Ground System

Design Concept

An earth electrode subsystem (EES) will be provided as a low resistance path to earth for lightning strikes and fault currents. The EES will consist of an exterior underground #1/0 AWG copper counterpoise with ground rods, 19 mm (3/4-inch) diameter x 3,048 mm (10-feet) long. Metallic components of the building shall be bonded to the EES in compliance with NEC Article 250.
A lightning protection subsystem to protect the building and associated structures will be provided in accordance with NFPA 780. The lightning protection subsystem will consist

of roof mounted air copper terminals, roof mounted #1/0 AWG loop conductors and #2/0 AWG down conductors to a #4/0 AWG ground girdle.

A signal reference subsystem will be provided. The subsystem will establish a voltage reference and minimize noise currents.

Provide ground bus bar system in the communication room including a Telecommunications System Ground Bus (TMGB) 152mm high x 610mm long x 7mm thick (6-in. x 24-in. long x ¼-inch thick) installed 2100 mm (7 feet) above finished floor, preferably on an exterior wall. Provide grounding in accordance with ETL 02-12, NEC, and TIA/EIA-607. The maximum resistance to ground of the system shall be 5 ohms.

ILLUMINATION SCHEDULE

ILLUMINATION SCHEDULE

ROOM NO.	ROOM NAME	CEILING TYPE	FIXTURE MOUNTING HEIGHT		AREA		IES RECOMMENDED ILLUMINATION		FIXTURE STYLE (see Notes)	TYPE	N0. OF LAMPS	RECOMMEND TYPE OF LIGHTING	ADDITIONAL FEATURES
			(MM)	(FT)	(SQ.M.)	(SQ. FT.)	(Lux)	(FC)					
101	HVAC Shop -General Illumination -LED Type Illuminated EXIT Sign -Emergency Light Pack	EXP1	4572	15'-0"	147	1584	300	30	NL-13A NL-63 NL-65	A B	31 - 2	F54T5 HO LED 5WMR16	Lt Sw with Occupancy Sensor
102	HVAC Tool Room -General Illumination -LED Type Illuminated EXIT Sign -Emergency Light Pack	EXP1	2743	9'-0"	24.25	261	500	50	NL-19 NL-63 NL-65	- - -	2 - 2	F32T8 LED 5WMR16	Lt Sw with Occupancy Sensor
103	HVAC Training Room -General Illumination -LED Type Illuminated EXIT Sign -Emergency Light Pack	ACST	2743	9'-0"	12.08	130	500	50	NL-6 NL-63 NL-67	- - -	2 - 2	F32T8U LED 5WMR16	Ballast switching Lt Sw with Occupancy Sensor
104	HVAC NCOIC Office General Illumination -LED Type Illuminated EXIT Sign -Emergency Light Pack	ACST	2743	9'-0"	12.08	130	500	50	NL-6 NL-63 NL-67		2 - 2	F32T8U LED 5WMR16	Lt Sw with Occupancy Sensor
105	Refrigerant Storage -General Illumination	EXP1	2438	8'-0"	2.97	32	500	50	NL-19		2	F32T8	Lt Sw with Occupancy Sensor
106	Metal Shop -General Illumination -LED Type Illuminated EXIT Sign -Emergency Light Pack	EXP1	4572	15'-0"	182.5	1965	300	30	NL-13A NL-63 NL-65	- -	3 - 2	F54T8HO LED 5WMR16	Lt Sw with Occupancy Sensor
107	Structures NCOIC Office -General Illumination -LED Type Illuminated EXIT Sign -Emergency Light Pack	ACST	2438	8'-0"	12.45	134	500	50	NL-6 NL-63 NL-67	- -	2 - 2	F32T8U LED 5WMR16	Lt Sw with Occupancy Sensor
108	Structures Training Room -General Illumination -LED Type Illuminated EXIT Sign -Emergency Light Pack	ACST	2438	8'-0"	12.45	134	500	50	NL-6 NL-63 NL-67	- -	2 - 2	F32T8U LED 5WMR16	Lt Sw with Occupancy Sensor
109	Metal Shop Welding Room -General Illumination -LED Type Illuminated EXIT Sign	Exp	2774	10'-0"	42.36	456	300	30	NL-19	- -	2	F32T8	Lt Sw

	-Emergency Light Pack												
110	Oxygen Tank Storage -General Illumination	EXP1	2438	8'-0"	1.11	12	300	30	NL-19		2	F32T8	Lt Sw
111	Acetylene Tank Storage -General Illumination	EXP1	2438	8'-0"	1.11	12	300	30	NL-19		2	F32T8	Lt Sw
112	Structures Tool Room -General Illumination -LED Type Illuminated EXIT Sign -Emergency Light Pack	EXP1	4572	15'-0"	165.36	1780	500	50	NL-19 NL-63 NL-65		2 - 2	F32T8 LED 5WMR16	Lt Sw with Occupancy Sensor
113	Carpentry Shop -General Illumination -LED Type Illuminated EXIT Sign -Emergency Light Pack	EXP1	4572	15'-0"	176.8	1903	300	30	NL-13A NL-63 NL-65		2 - 2	F32T8 LED 5WMR16	Lt Sw with Occupancy Sensor
114	Utilities Shop -General Illumination -LED Type Illuminated EXIT Sign -Emergency Light Pack	EXP1	4572	15'-0"	147.43	1587	300	30	NL-13A NL-63 NL-65		3 - 2	F54T8HO LED 5WMR16	Lt Sw with Occupancy Sensor
115	Chemical Storage -General Illumination	EXP1	2438	8'-0"	4.92	53	300	30	NL-19		2	F32T8	Lt Sw
116	Utilities Tool Room -General Illumination -LED Type Illuminated EXIT Sign -Emergency Light Pack	EXP1	2743	9'-0"	28.89	311	300	30	NL-19 NL-63 NL-65		2 - 2	F32T8 LED 5WMR16	Lt Sw with Occupancy Sensor
117	Utilities NCOIC Office -General Illumination -LED Type Illuminated EXIT Sign -Emergency Light Pack	ACST	2743	9'-0"	12.08	130	500	50	NL-6 NL-63 NL-67		2 - 2	F32T8U LED 5WMR16	Lt Sw with Occupancy Sensor
118	Utilities Training Room -General Illumination -LED Type Illuminated EXIT Sign -Emergency Light Pack	ACST	2743	9'-0"	12.08	130	500	50	NL-6 NL-63 NL-67	g	2 - 2	F32T8U LED 5WMR16	Lt Sw with Occupancy Sensor
119	Electrical Shop -General Illumination -LED Type Illuminated EXIT Sign -Emergency Light Pack	EXP1	4572	15'-0"	147.34	1586	300	30	NL-13A NL-63 NL-65		2 - 2	F32T8 LED 5WMR16	Lt Sw with Occupancy Sensor
120	Electrical NCOIC Office -General Illumination -LED Type Illuminated EXIT Sign -Emergency Light Pack	ACST	2743	9'-0"	12.08	130	500	50	NL-6 NL-63 NL-67	- -	2 2	F32T8U LED 5WMR16	Lt Sw with Occupancy Sensor
121	Electrical Training Room	ACST	2743	9'-0"	12.08	130	500	50	NL-6		2	F32T8U	Lt Sw with

	-General Illumination -LED Type Illuminated EXIT Sign -Emergency Light Pack								NL-63 NL-67		- 2	LED 5WMR16	Occupancy Sensor
122	Electrical Tool Room -General Illumination -LED Type Illuminated EXIT Sign -Emergency Light Pack	EXP1	2743	9'-0"	27.87	300	500	50	NL-19 NL-63 NL-65		2 - 2	F32T8 LED 5WMR16	Lt Sw with Occupancy Sensor
123	Hallway -General Illumination -LED Type Illuminated EXIT Sign -Emergency Light Pack	ACST	3048	10'-0"	111.8	1203	100	10	NL-6 NL-63 NL-67		2 - 2	F32T8U LED 5WMR16	Light Switch and Photocell & Motion Ltg Controller with Curfew Timer
124	Copy Room - General Illumination -LED Type Illuminated EXIT Sign -Emergency Light Pack	ACST	2743	9'-0"	13.01	140	500	50	NL-6 NL-63 NL-67	- -	2 - 2	F32T8U LED 5WMR16	Lt Sw with Occupancy Sensor
125	Mechanical Room -General Illumination -LED Type Illuminated EXIT Sign -Emergency Light Pack	EXP1	2438	8'-0"	48.96	527	300	30	NL-6 NL-63 NL-65		2 - 2	F32T8U LED 5WMR16	Lt Sw with Occupancy Sensor
126	Electrical Room -General Illumination -LED Type Illuminated EXIT Sign -Emergency Light Pack	EXP1	2438	8'-0"	16.72	180	300	30	NL-19 NL-63 NL-65	- -	2 - 2	F32T8 LED 5WMR16	Lt Sw with Occupancy Sensor
127	Computer Based Training Rm -General Illumination -LED Type Illuminated EXIT Sign -Emergency Light Pack	ACST	2743	9'-0"	28.24	304	500	50	NL-6 NL-63 NL-67		2 - 2	F32T8U LED 5WMR16	Lt Sw with Occupancy Sensor
128	Break/Conference Room -General Illumination -LED Type Illuminated EXIT Sign -Emergency Light Pack	ACST	2743	9'-0"	41.43	446	500	50	NL-6 NL-63 NL-67		2 - 2	F32T8 LED 5WMR16	Lt Sw with Occupancy Sensor, Ballast switching for reduced lt levels
129	Supplies Storage -General Illumination -LED Type Illuminated EXIT Sign -Emergency Light Pack	EXP1	2743	9'-0"	3.72	40	500	50	NL-6 NL-63 NL-67	- -	2 - 2	F32T8U LED 5WMR16	Lt Sw with Occupancy Sensor
130	Men's Toilet -General Illumination -Vanity (Wall-Mtd) -LED Type Illuminated EXIT Sign -Emergency Light Pack	GWB2	2438	8'-0"	28.24	304	500	50	NL-5 NL-24 NL-63 NL-67		1 1 - 2	F32T8 F32T8 LED 5WMR16	Lt Sw
131	Women's Toilet -General Illumination --Vanity (Wall-Mtd) -LED Type Illuminated EXIT Sign -Emergency Light Pack	GWB2	2438	8'-0"	12.63	136	500	50	NL-5 NL-24 NL-63 NL-67		1 1 - 2	F32T8 F32T8 LED 5WMR16	Lt Sw

132	ADA Compliant Toilet - General Illumination --Vanity (Wall-Mtd) -LED Type Illuminated EXIT Sign -Emergency Light Pack	GWB1	2438	8'-0"	8.36	90	500	50	NL-5 NL-24 NL-63 NL-67		1 1 - 2	F32T8 F32T8 LED 5WMR16	Lt Sw
133	COMMS Room - General Illumination -LED Type Illuminated EXIT Sign -Emergency Light Pack	EXP1	3048	10'-0"	10.22	110	500	50	NL-19 NL-63 NL-65		2 - 2	F32T8 LED 5WMR16	Lt Sw with Occupancy Sensor
134	Janitor's Room	GWB1	2438	8'-0"	6.5	70	300	30	NL-26		2	26W CFL	Lt Sw with Occupancy Sensor

NOTE:

1. NL refers to NAVFAC Light Fixture Standards. Fixture details can be downloaded in pdf format at the wbdg website: http://www.wbdg.org/ccb/NAVGRAPH/graphtoc.pdf**.**

6. ENGINEERING SYSTEMS REQUIREMENTS

E20 FURNISHINGS

SYSTEM DESCRIPTION

Furnishings shall include fixed furnishings as part of the Structural Interior Design (SID Package.

The design and documentation shall be funded as part of the construction contract.

Fixed furnishings (items that are fixed to the structure) are part of the construction contract SID.

GENERAL SYSTEMS REQUIREMENTS

Design and provide fixed furnishings for all areas as developed during Activity programming and as indicated in the Room Requirements (refer to Part 3 Section 5 of this RFP). Design in conjunction with UFC 03-120-10, Interior Design.

All fixed furnishings selections shall be closely coordinated with Parts 3 and 4 Sections C10, Interior Construction, and C30 and E10 of this RFP.

E2010 FIXED FURNISHINGS (SID)

Fixed furnishings (SID) are funded as part of the construction project and are not funded as part of FF&E. Each submittal must demonstrate complete coordination with the facility design and with the package for movable furnishings.

Develop design as described herein and provide storage shelving, equipment racks, and window treatments. Cross reference C10 Interior Construction, and C30 Interior Finishes, for performance requirements. Each submittal must demonstrate complete coordination with the facility design and with the package for movable furnishings.

E201002 WINDOW TREATMENTS

All windows and other glazed openings to the exterior of the building shall be provided with horizontal blinds and are considered SID and are funded as part of the construction project.

Provide plastic or vinyl of type, size and color per the Andersen Air Force Base Architectural Compatibility and Base Design Standards.

E201003 FIXED SEATING AND TABLES

Provide durable, waterproof fixed locker room benches.

End of Section

6. ENGINEERING SYSTEMS REQUIREMENTS

G10 SITE PREPARATION

SYSTEM DESCRIPTION

The site preparation system consists of site clearing and earthwork necessary to ready the site for other work associated with the project.

GENERAL SYSTEM REQUIREMENTS

Develop the project site and perform all off-site work necessary to meet the requirements of the project, antiterrorism criteria, local codes, reference standards, technical specifications and performance criteria.

A topographic survey of the existing site has been performed on this RFP to verify existing utilities and structure locations and is used in Part 6. The topographic survey has been provided to show the location of existing facilities, (except for new utilities that was installed after the topographic survey had been performed) areas of new work required by this RFP and the character of the sites. Prior to starting work, physically verify the location of all existing utilities and obtain all additional survey data required to provide a quality final design. The existence, size and/or location of the utilities are not guaranteed by the surveys provided. Electronic files of the topographic surveys will be provided to the Contractor only after award of the contract.

The Contractor is required to perform a topographic survey of the project area that will be impacted by his work and shall verify the location of all utilities prior to construction.

Subsurface soil information, including a geotechnical report from projects immediately adjacent to the project site, are included in other portions of this RFP.

Any included subsurface data and information is only for the Contractor's information and is not guaranteed to fully represent all subsurface conditions. The Government shall not be responsible for any interpretation or conclusion by the Contractor drawn from the data or information.

Any geotechnical report included with site investigation data is provided only to better

convey data (boring logs, testing, etc.) or to document observed site conditions. The assumptions, analysis, and recommendations of the accompanying report were developed for preliminary planning purposes only. Requirements stated in Parts 3 and 4 of the RFP take precedence over any content of any included geotechnical report.

The Contractor is required to retain a geotechnical engineer experienced and licensed in the geographic region of the project to interpret the provided data as related to his design concept and develop requirements for bidding. Additional requirements for the geotechnical design of this project are provided elsewhere in this RFP.

Minor variations between borings should be anticipated. The Contractor shall bear all costs associated with the site preparation and actual foundation except as allowed by the Contract Clause FAR 52.236-2, "Differing Site Conditions". The Contractor's Geotechnical Engineer shall perform additional subsurface investigation as required to adequately determine all applicable geotechnical factors including the type and capacity of the project foundation(s). The Contractor's Geotechnical Engineer shall consider the provided information and any additional information obtained and prepares a report as described in other portions of this RFP.

Personnel under the supervision of a registered Professional Engineer shall provide inspection of excavations and soil/groundwater conditions throughout construction. The Engineer shall be responsible for performing pre-construction and periodic site visits throughout construction to assess site conditions. The Engineer, with the concurrence of the Contractor and the Contracting Officer, shall update the excavation and shoring as construction progresses to reflect actual site conditions and shall submit the updated plan and a written report (with professional stamp) at least monthly informing the Contractor and Contracting Officer of the status of the plan and an accounting of Contractor adherence to the plan; specifically addressing any present or potential problems. The Engineer shall be available to meet with the Contracting Officer at any time throughout the contract duration. The Contractor shall bear all costs of the Engineer.

Unless otherwise noted, provide new facilities at the locations indicated on the drawings in another part of this RFP.

Minimize the impact of construction activity on operations and neighboring facilities.

Identify and obtain all permits to comply with all federal, state, and local regulatory requirements associated with this work. The contractor shall submit a complete "Permits Record of Decision" (PROD) form with the first design submittal package. A blank PROD form can be obtained at the Download Tab of Part 6 of the NAVFAC Design-Build website at the following link
http://www.wbdg.org/ndbm/Download/Down_Additional.html?Section=AdditionalInfo .

Contractor shall determine correct permit fees and pay said fees. Copies of all permits, permit applications, and the completed PROD form shall be forwarded to the Govern-

ment's Civil Reviewer and Environmental Reviewer.

Jurisdictional tidal and non-tidal wetlands have not been identified on the project site.

Coordinate and obtain the Resident Officer In Charge of Construction's (ROICC) approval for proposed haul route(s), work site access point(s), employee parking location(s) and material lay down and storage area(s).

Refer to Site Analysis and Building Requirements Sections for additional site preparation functional program information.

G1010 SITE CLEARING

G101001 CLEARING

Clearing is required.

G101006 DEBRIS DISPOSAL

All grubbing and clearing residue, demolished material, rubbish and debris generated by this project shall be disposed off-base by the contractor.

G1030 SITE EARTHWORK

G103001 GRADING

Finish floor elevations for the new facility shall be as shown in the floor plan. Grading plan shall be as indicated in the grading plan.

G103003 ROCK EXCAVATION

Blasting will not be permitted.

G103004 FILL & BORROW

Borrow and select fill shall come from off-base sources.

G103005 COMPACTION

Compaction shall be at least 95% relative density in maximum 8" loose layers.

G103008 SOIL TREATMENT

Treat the area around the entire foundation of each building for termite control in accor-

dance with the specific recommendations for chemical termiticide applications.

G1040 DISPOSAL

All waste materials shall become the property of the Contractor and shall be transported, disposed of or recycled off-base.

--End of Section--

6. ENGINEERING SYSTEMS REQUIREMENTS

G20 SITE IMPROVEMENTS

SYSTEM DESCRIPTION

The site improvements system consists of pavements and pavement related features, landscaping and other exterior site development work related to this project. Pavement design shall be performed by a licensed Professional Engineer familiar with conditions local to the project site.

GENERAL SYSTEMS REQUIREMENTS

Provide site improvements as required to make a useable facility that meets functional and operational requirements, incorporates all applicable anti-terrorism, force protection and physical security requirements and blends into the existing environment.

Provide site improvements in conformance with applicable requirements of the Uniform Federal Accessibility Standards.

Identify and obtain all permits to comply with all federal, state, and local regulatory requirements associated with this work. The contractor shall complete the "Permits Record of Decision" (PROD) form with the first design submittal package. A blank PROD form can be obtained at the Download Tab of Part 6 of the NAVFAC Design-Build website at the following link
http://www.wbdg.org/ndbm/Download/Down_Additional.html?Section=AdditionalInfo .

Contractor shall determine correct permit fees and pay said fees. Copies of all permits permit applications, and the completed PROD form shall be forwarded to the Government's Civil Reviewer.

Provide improvements as required to conform to all applicable anti-terrorism and physical security requirements.

Minimize the impact of construction activity on operations and neighboring facilities.

Locate new site improvements at locations indicated on the drawings in another part of this RFP. If specific locations are not provided, site the improvements to develop appropriate and positive relationships with other facilities and to conform to existing development patterns.

Refer to Site Analysis and Building Requirements Sections for additional site improvement functional program information.

G2010 ROAD ENTRANCES AND PARKING LOT

Provide road entrances, as required, to allow for safe, convenient and logical circulation, while discouraging through traffic. The design of base course pavements shall take into consideration the anticipated daily traffic of POV's, Humvee's and Off-Terrain Vehicles, over the life of the project as well as the existing soil conditions at the site.

Provide new drive access to all roll-up door entrances and around the facility as shown in Part 6, Drawings with 75mm (3") bituminous asphalt wearing course on 200mm (8") aggregate base course over a compacted sub-grade as part of Base Bid.

G202001 BASES AND SUBBASES

Recycled materials such as on-site excavated materials or asphalt pavement meeting specified gradation for aggregate base and sub base courses may be used provided that their liquid limit and plasticity index do not exceed 25 and 6 respectively when tested in accordance with ASTM D-4318 and as permitted by Construction Management Engineer (CME).

G202002 CURBS AND GUTTERS

Provide curb and gutter to tie existing roadway to new drive access pavement leading to roll up doors.

G202004 MARKING AND SIGNAGE

Provide permanent and temporary markings (walkway pavement, curb and object), signage (regulatory, warning and guidance, including crosswalks) and other traffic control devices as required.

G202005 GUARDRAILS AND BARRIERS

Provide steel bollards filled with concrete at all outdoor equipment enclosures in accordance with the UFC 3-200-10N, Civil Engineering.

G2030 PEDESTRIAN PAVING (SIDEWALKS)

Provide a network of Portland cement concrete sidewalks, separated from, but connected to vehicular circulation systems, to allow pedestrians circulations between various elements of the project.

Provide 100mm (4”) thick concrete pavement with welded wire fabric reinforcement (waft) over a 125mm (5”) thick compacted base course. Refer to notional concept drawings in another part of this RFP.

G2040 SITE DEVELOPMENTS

The project will necessitate backfilling of limestone fill that varies from 600mm (2 ft.) to 900mm (3 ft.) DB Contractor shall coordinate with available as-built or final drawings available to design new building elevation with that of access road network including final grading of immediate vicinity surrounding the RED HORSE Cantonment . New underground utilities will be connected from the planned building to existing mainline. A 150mm (6”) sewer lateral and a ground clean-out is required to be connected to existing sewer manhole. A 62.5mm (2.5 in.) potable water lateral and a 200mm (8-in.) fire line will be connected to existing 250mm (10-in.) main water line located along south west side of the facility. A water meter is required to be installed at the 62.5mm potable water lateral only and backflow preventer for both potable water and fire line is required.

G204001 FENCING & GATES (N/A)

G2050 LANDSCAPING

Provide landscaping without permanent irrigation system consisting of grass groundcover as required to provide an erosion control, quality, cost-effective, functional and visually appealing landscape program. Landscape program will be kept to a minimal that will enhance the development, while complying with all applicable anti-terrorism, force protection and physical security requirements.

Preferred grass seed and turf mix is hydraulic seeding and mulching with Bermuda grass in accordance with Andersen Air Force Base Architectural Compatibility and Base Design Standards (ABCDS).

Guarantee all landscaping for a period of one year after final acceptance of the project.

G205001 FINE GRADING AND SOIL PREPARATION

Clearing and finish grading are required. Backfilling with limestone fill is necessary to meet new grading elevations.

Provide 4" of topsoil for all grass areas and other pervious areas disturbed by Contractor operations.

G205002 EROSION CONTROL MEASURES

Prevent erosion from occurring by providing erosion control measures as required by city, state and federal requirements.

--End of Section—

6. ENGINEERING SYSTEMS REQUIREMENTS

G30 SITE CIVIL/MECHANICAL UTILITIES

SYSTEM DESCRIPTION

The site civil/mechanical utility systems include water supply systems, sanitary sewer systems, storm drainage systems, and associated appurtenances which are more than 5 feet (1.5 meters) outside the building.

The site mechanical utility system consists of all piping and appurtenances for solar water heater system including all accessories and devices as necessary and required for a complete and usable system up to 5 feet (1.5 meters) outside buildings.

GENERAL SYSTEM REQUIREMENTS

Develop the site to provide water, fire protection, sanitary sewer, storm drainage, services that meet the requirements of each using agency.

Provide each system complete and ready for operation.

Physically verify the location of existing above and below ground utilities prior to starting work.

Identify and obtain all permits to comply with all federal, state, and local regulatory requirements associated with this work. The contractor shall complete the "Permits Record of Decision" (PROD) form with the first design submittal package. A blank PROD form can be obtained at the Download Tab of Part 6 of the NAVFAC Design-Build website at the following link
http://www.wbdg.org/ndbm/Download/Down_Additional.html?Section=AdditionalInfo .

Contractor shall determine correct permit fees and pay said fees. Copies of all permits permit applications, and the completed PROD form shall be forwarded to the Government's Civil/Mechanical Reviewer.

Minimize the impact of construction activity on facility operations and neighboring facilities.

Utility connection points are indicated on the drawings in another part of this RFP. Obtain final approvals from the Government's Civil/Mechanical Reviewer and the Contracting Officer for all utility connection points associated with this work.

Coordinate with the local utility providers and pay any fees or charges required to connect to their utility.

Refer to Site Analysis and Building Requirements Sections for additional site civil/mechanical utilities information.

Provide all required fittings, connections and accessories required for a complete and usable system. All equipment shall be installed per the criteria of PTS Section G30 and the manufacturer's recommendations. Where the word "should" is used in the manufacturer's recommendations, substitute the word "shall".

After installation of the equipment and systems, provide individual training courses for two Government personnel for each of the items listed below, covering items contained in the Operations and Maintenance manuals. Provide one copy of the Operations and Maintenance manuals for each two course attendees. Provide one DVD disc of the training courses to be used as refresher courses and to train additional personnel. Training shall be conducted by the same factory trained engineer that supervised the installation of the system. Training shall include classroom discussion as well as hands on maintenance, replacement of typical components and repair type maintenance training for parts typically replaced or repaired in the field. Submit training plan 30 calendar days prior to training sessions. Training plan shall include scheduling, content, outline, and training material handouts.

G3010 WATER SUPPLY

Provide the new water system and connections to the existing water system in accordance with UFC 3-200-10N, *Civil Engineering*; the utility provider’s requirements;

Notify the utility provider of the additional demand generated by the proposed facility. Provide a copy of all correspondence with the utility provider to the Government’s Civil/Mechanical Reviewer.

Provide connection to the existing water distribution system at the point indicated on the drawings in another part of this RFP.

G301002 POTABLE WATER DISTRIBUTION

Connect the new potable water distribution system to the distribution system at the point indicated on the drawings in another part of this RFP.

A water meter on each proposed service line is required. Provide type of meter and remote reading as required by the utility provider.

Provide precast concrete meter box.

Fire hydrants shall be yellow in color.

Backflow preventers are required on all service entrance lines. If not specified in ESR D20 and D40, provide backflow preventers aboveground outside the building.

G301004 FIRE PROTECTION WATER DISTRIBUTION

Connect the new fire line lateral system at the point indicated on the drawings in another part of this RFP.

Backflow preventer is required.

G3020 SANITARY SEWER

Provide the new sanitary sewer system and connections to the existing sanitary sewer collection system in accordance with UFC 3-200-10N, Civil Engineering; the utility provider's requirements.

Notify the utility provider of the additional wastewater flow generated by the proposed facility. Provide a copy of all correspondence with the utility provider to the Government Civil Reviewer.

Provide connection to the existing sanitary sewer collection system at the point indicated on the drawings in another part of this RFP. In identifying a suitable point of connection, provide consideration of the capacity of the existing collection system.

G303004 CULVERTS

Provide culvert piping for drainage control as indicated in another part of this RFP.

G303005 HEADWALLS

Provide headwalls as indicated in another part of this RFP.

G303006 EROSION & SEDIMENT CONTROL MEASURES

Not Used.

G303007 STORMWATER MANAGEMENT

Provide shallow grass swale as required to regulate storm water runoff and to prevent site and off-site soil erosion as indicated in another part of this RFP.

-- *End of Section* --

6. ENGINEERING SYSTEM REQUIREMENTS

G40 ELECTRICAL SITE UTILITIES

SYSTEM DESCRIPTION

G41 Exterior Electrical Service

Design Concept

Design and construction of exterior electrical service shall comply with UFC-3-550-01. Contractor shall field verify and perform independent engineering study of the existing distribution electrical system prior to submittal of his or her proposal. Primary electrical design concept is as follows:

1. Overhead to Underground Electrical Conversion (included in the Basic Bid):

   Install new 13.8 kV primary underground lines to replace existing 13.8kV overhead electrical distribution system. Included in this work:

   a. Install new 1 – 6 inch concrete encased ductline with 3 – 1/c #4/0 AWG XLP 15 KV 133 pct Shielded Copper Cable, and 1 – 6 inch spare concrete encased duct, to span the length of the existing overhead line.

   b. Provide at least two manholes, 8’ x 8’ x 8- 1/2’ high ceiling with stub outs for future facilities:

- Airfield Operations Facility
- Power Production Facility
- Bulk Material Storage Facility

c. Provide new 13.8 KV 4-way pad-mounted primary switches at both ends of the new underground line. Transfer both ends of existing lines from pole risers via new primary manholes and connect to new primary pad-mounted switches. Switches will be used for isolation in the underground loop feeder.

c.1. 4-Way Primary Switch at near existing switch by the fuel station:

- 4-way 13.8 KV primary pad-mounted switch, stainless steel clad, dead-front.
- One switch will be connected to the existing switch as the main incoming feeder.
- The second switch will be used to feed the new underground feeder running along the southern end of the REDHORSE compound via new primary manhole.
- The third switch of the 4-Way group will be used to feed the underground feeder going to the Combat Communications compound via new primary manhole.
- The fourth switch will be designated as spare for future use

c.2. 4-Way Primary Switch at northwest end of new underground line:

- 4-way 13.8 KV primary pad-mounted switch, stainless steel clad, dead-front.
- Two of the four switches will be used for looping the feeder through the 4-way switch.
- The third switch to be used for a future 30 KVA 3-phase pad-mounted transformer for area lighting and existing loads served by the overhead line.
- The fourth switch will be designated as spare for future use.

d. Provide new 13.8 KV 4-way pad-mounted primary switch in front of the REDHORSE Cantonment Facility.

d.1. 4-Way Primary Switch at southern end the REDHORSE Cantonment Facility:

- 4-way 13.8 KV primary pad-mounted switch, stainless steel clad, dead-front.
- Two of the four switches will be used for looping the feeder through the 4-way switch.
- The third switch of the 4-Way group will be used to feed a new 300 KVA 480/277 volt pad mounted transformer for the REDHORSE Cantonment Facility.
- The fourth switch will be used to feed existing overhead distribution line servicing the REDHORSE K-Span Warehouses. Install new riser to serve existing overhead lateral.

e. Provide additional primary manholes as necessary to limit pulling tensions, and pulling distances to 300 LF.

f. After underground duct, cables, manholes and switches are completed, transfer route existing underground lines from riser poles to primary switches.

g. Remove existing concrete poles and overhead lines and equipment. Coordinate removal work with DZSP and REDHORSE Squadron as necessary.

h. Coordinate outage requirements with DZSP and REDHORSE Squadron as necessary.

G42 Exterior Telecommunications Service

Design Concept

Telecommunications Service for LAN, Telephone, and Cable TV will be obtained by the following means:

1. Provide approximately 50 M of two (2) 102 mm (4-inch) PVC Such 40 concrete encased service ducts, each with three (3) 3-cell inner ducts, from the Telecomm Room for this project to the existing underground COMM duct system at Comm. Manhole CMH 1306.

    a. Provide a No. 12 AWG bare copper conductor integral to flexible geo-textile inner duct. Alternate method may be used upon written request and approval from 36 Communications Squadron at Andersen Air Force Base.

2. Provide one (1) 1200 x 1200 (4’ x 4’) intermediate Comm. Handhole (CHH) with round metal cover within 25 ft of the building to facilitate cable pulling. This new section of underground duct work would complete the underground COMM duct system access from the Telecomm Room for this project back to ITN Bldg 1300.

    a. Typical CHH to be equipped with the following:
        1). Round cast metallic, lockable cover, traffic bearing as needed, labeled “TELECOMM”, or “TELECOMMUNICATIONS”.
        2). Cable racks and pulling eyes on each wall.
        3). Ground rod 19 x 1050 (3/4” x 10’)

3. Provide approximately 50 M of one (1) 12-strand single mode fiber optic cable from existing CMH 1306 (formerly RH-MH-6) to the Telecomm Room. Cable shall be provided from point-to-point without splices. Fusion splices shall be used for splicing to existing fiber.

    a. 50 ft coil of cable shall be provided in existing CMH 1306.

    b. Terminate Fiber Optic Cable on fiber racks on fiber optic patch panels using SC connectors.
    Terminations shall be performed only while witnessed by 36 CS.

    c. Cables shall be labeled at manholes, handholes and at terminations in Telecomm Room.

4. Provide approximately 50 M of 50-pair 24 AWG PE89 copper cable from existing CMH 1306 to the Telecomm Room.

    a. 50 ft coil of cable shall be provided in existing CMH 1306.

    b. Cables shall be terminated on 50-pair terminal blocks on MDF. Terminations shall be performed only when witnessed by 36 CS.

c. Cables shall be labeled at manholes, handholes and at terminations in Telecomm Room.

5. Provide approximately 100 M of 102 mm (4-inch) PVC Sch 40 duct with pullwire for future MCV Cable TV Service from existing CMH 1306 to the Telecomm Room.

6. Provide a 1200 x 2400 x 19 (4'x8'x3/4") plywood backboard for Telecomm (Fiber Optic and Copper Cables), and also for MCV.

G43 Exterior Lighting

1. Basic Bid - Design Concept:

a. The walkways and roadways for the facility will be illuminated with LED type luminaires mounted on concrete poles designed for a 190 mph wind speed. Illumination levels will be in accordance with MIL-HDBK-1190. Each luminaire will be photo-cell controlled. Base Bid

b. All exterior doorways will be equipped with illuminated with compact fluorescent downlight type luminaires with cutoff for safety, security and general illumination. Illumination levels will be in accordance with MIL-HDBK 1190. Exterior lighting will be connected to a lighting control panel and be photo-cell or time switch controlled. It is assumed all exterior lights will operate from dusk to dawn.

c. Induction light fixture with high cutoff will be mounted on exterior walls for area illumination as requested by Base Energy Office of Base CES.

--End of Section--

PART FOUR – PERFORMANCE TECHNICAL SPECIFICATIONS

(100% RFP Submittal)

PERFORMANCE TECHNICAL SPECIFICATIONS

Foundations **A10**
Superstructure **B10**
Exterior Enclosure **B20**
Roofing **B30**
Interior Constructions **C10**
Interior Finishes **C30**
Conveying **D10**
Plumbing **D20**
HVAC **D30**
Fire Protection **D40**
Note: Reference to Building Integrated Photo Voltaic System - NIC Electrical **D50**
Site Preparations **G10**
Site Improvements **G20**
Site Civil/Mechanical Utilities **G30**
Site Electrical Utilities **G40**
General Performance Technical **Z10**

SECTION A10

FOUNDATIONS
11/10

A10 GENERAL

RFP Part 3 including the Engineering System Requirements (ESR) provide project specific requirements. The RFP Part 4 Performance Technical Sections (PTS) provide generalized technical requirements that apply to multiple facility types and include more requirements than are applicable to this project. Therefore RFP Part 4 requirements that correspond and further define the RFP Part 3 requirements are specific to this project, other RFP Part 4 requirements are not required.

A10 1.1 DESIGN GUIDANCE

Provide the design and installation in accordance with the following references. This Performance Technical Specification (PTS) adds clarification to the fundamental requirements contained in the following Government Standards. The general requirements of this PTS section are located in PTS Section Z10, *General Performance Technical Specification*.

A10 1.1.1 Government Standards

UNIFIED FACILITIES CRITERIA (UFC)

UFC 1-200-01	General Building Requirements(A reference in this PTS section to UFC 1-200-01 requires compliance with the Tri-Service Core UFCs that are listed in UFGS Section 01 33 10.05 20, which includes the following significant UFC(s):UFC 3-100-10N, Architecture UFC 3-220-01N, Geotechnical Engineering Procedures for Foundation Design of Buildings and Structures UFC 3-301-01, Structural Engineering)

UNIFIED FACILITIES GUIDE SPECIFICATIONS (UFGS)

UFGS Section 31 23 00.00Excavation and Fill
20

A10 1.2 GENERAL REQUIREMENTS

A10 1.2.1 Earthwork

The Designer of Record shall prepare the following UFGS Specification as part of the project specification and shall include the prepared specification section in the design submittal for the project:

Section 31 23 00.00 20 *Excavation and Fill*

A10 1.2.2 Geotechnical Report

A10 1.2.2.1 Subsurface Soils Information

Any provided subsurface soil information is included for the contractor's information only, and is not guaranteed to fully represent all subsurface conditions. The data included in this RFP is to assist in proposal preparation. Contractor shall perform, at his expense, such subsurface exploration, investigation, testing, and analysis as his Designer of Record deems necessary for the design and construction of the foundation system.

A10 1.2.2.2 Contractor-provided Geotechnical Engineer

The Contractor is required to retain a Geotechnical Engineer experienced and licensed in the geographic region of the project to interpret any provided data as related to his design concept and develop requirements for bidding. Requirements stated in Parts 3 and 4 of the RFP take precedence over any content of any included geotechnical report. Additional requirements for the geotechnical design of this project are provided elsewhere in this RFP.

All work by the Contractor-provided Geotechnical Engineer at the project location shall be coordinated with the Contracting Officer and shall not interfere with normal base operations. When providing the Foundation Work Design submittal, provide the Contractor's Geotechnical Report (an Adobe Acrobat PDF version on CD and two printed copies) for review and record keeping purposes. The report shall become the property of the Government. Provide the Geotechnical reports generated during construction, such as pile load tests or PDA results, pile driving results and analysis, to the Contracting Officer (an Adobe Acrobat PDF version and two printed copies) for record keeping purposes.

A10 1.2.2.3 Contractor-Provided Geotechnical Report

Submit a written Geotechnical report based upon Government-provided subsurface investigation data and all additional field and laboratory testing accomplished at the discretion of the Contractor's Geotechnical Engineer. The Geotechnical Report shall include the following:

a. The project site description, vicinity map and site map indicating the location of borings and any other sampling locations. Provide notes explaining any abbreviations or symbols used
b. Results of all applicable field and laboratory testing, whether Government or Contractor-provided. Address existing subsurface conditions, selection and his design of the foundation and floor slab, all underground construction including utility installation and all other site-specific requirements (such as soil stabilization and slope stability).
c. Engineering analysis, discussion and recommendations addressing:

   1) Settlement analysis. Settlement shall be limited as required in EM 1110-1-1004, *Settlement Analysis*

2) Bearing Capacity Analysis.

3) Foundation selection and construction considerations (shallow, deep, special); dimensions, and installation procedures.

4) Site preparation (earthwork procedures and equipment), compaction requirements, building slab preparation (as applicable), soil sensitivity to weather and equipment, groundwater influence on construction, mitigation of expansive soils or liquefaction potential, dewatering requirements, slope stability, and other necessary instructions.

5) Sheeting and shoring considerations, as applicable

6) Pavement design calculations with parameters defined, actual or assumed, and recommended thicknesses and materials, whether for design or for proposed modifications to the RFP provided pavement design

7) Haul routes and stockpile locations for earthwork, as applicable.

8) Calculations to support conclusions and recommendations.

9) Recommendations shall be presented on a structure-by-structure Basis.

The Geotechnical Report shall be signed by the Contractor-provided Geotechnical Engineer.

The submitted report shall be accompanied by a cover letter identifying any report recommendations of the report proposed to be adopted into the design which are interpreted by the Contractor as a change condition to the Geotechnical or Pavement related requirements of the RFP.

A10 1.2.2.4 Geotechnical Site Data required in Design Drawings

The Contractor's final design drawings shall include the Government-provided subsurface data presented in the RFP as noted below, as well as all additional borings and laboratory test data results performed by the Contractor. The data provided shall include:

a. Logs of Borings and related summary of laboratory test results and groundwater observations. Provide 24-hour groundwater observations for at least 20% of the borings, minimum one boring. Provide notes explaining any abbreviations or symbols used and describing any special site preparation requirements.
b. The locations of all borings shall be indicated on the drawings. The applicable design drawings shall be revised to reference the Contractor’s Geotechnical Report as being a basis for design.

A10 1.2.3 Pile Driver Analyzer (PDA)

If deemed necessary by the Designer-of-Record's geotechnical engineer, the dynamic wave equation method of analysis, pile

driver analyzer, shall be used to validate pile and pile hammer compatibility, establish pile driving criteria, establish terminal penetration resistance, or verify as-driven capacity of the pile. The PDA or static load test(s) shall be required for piles with required allowable design capacity equal to or greater than 40 tons.

A10 1.3 PERFORMANCE VERIFICATION AND ACCEPTANCE TESTING

Verification of satisfactory construction and system performance of the foundations shall be via Performance Verification Testing, and by field inspection, as detailed in this section of the RFP and in UFGS Section 01 45 00.05 20. Provide special tests and special inspections in accordance with UFGS Section 01 45 00.05 20, *Design and Construction Quality Control*.

A10 1.3.1 Earthwork

Perform quality assurance for earthwork in accordance with IBC Chapter 17 and UFGS Section 31 23 00.00 20. A competent person, as defined by COE EM 385-1-1, under supervision of a registered Professional Engineer is required to provide inspection of excavations and soil/groundwater conditions throughout construction. The Engineer shall be responsible for performing periodic site visits throughout construction to assess site conditions. The Engineer, with the concurrence of the contractor and the Contracting Officer, shall update the excavation, sheeting, shoring, and dewatering plans as construction progresses to reflect actual site conditions and shall submit the updated plan and a written report (with professional stamp) at least monthly informing the Contractor and the Contracting Officer of the status of the plan and an accounting of Contractor adherence to the plan; specifically addressing any present or potential problems. The Engineer shall be available to meet with the Contracting Officer at any time throughout the contract duration.

A10 1.3.2 Piles

If piles are required, perform quality assurance for pile construction in accordance with UFC 1-200-01, *General Building Requirements*. Pile installation procedures and installed piles shall be inspected and found to be in compliance with these specifications prior to acceptance of the work.

Install test piles as directed by the Contractor’s Geotechnical Engineer. Pile load tests, if required, shall be performed in accordance with UFC 1-200-01. Test pile installation procedures shall be as directed by the Contractor’s Geotechnical Engineer. Results of the pile test program and final pile installation criteria shall be submitted to the Contracting Officer prior to installation of the production piles. If deemed necessary by the Designer-of-Record’s Geotechnical Engineer, the dynamic wave equation method of analysis, pile driver analyzer, shall be used to validate pile and pile hammer compatibility, establish pile driving criteria, establish terminal penetration resistance, or verify as-driven capacity of the pile. The PDA or static pile load test (ASTM D 1143) shall be required for piles with an allowable design capacity equal to or greater than 40 tons. When required, perform PDA on all indicator or test piles. Perform CAPWAP analysis on at least one test (indicator) pile to determine capacity with a minimum three day set-up and develop pile installation criteria.

A10 1.4 DESIGN SUBMITTALS

Design submittals shall be in accordance with Z10, *General Performance Technical Specifications*, UFGS section 01 33 10.05 20, *Design Submittal Procedures*, UFC 1-300-09N, *Design Procedures,*UFC 3-220-01N, *Geotechnical Engineering Procedures for Foundation Design of Buildings and Structures, and UFC 1-200-01, General Building Requirements*.

UFGS sections listed below or in the body of the PTS text are to be used by the Designer of Record (DOR) as a part of the design submittal. The DOR shall edit these referenced UFGS sections and submit them as a part of the design submittal specification. Edit the specification sections in accordance with the limitations stated in PTS section Z10, *General Performance Technical Specifications*.

UFGS Section 31 23 00.00 20 *Excavation and Fill*

A10 1.5 CONSTRUCTION SUBMITTALS

Submit construction submittals in accordance with PTS Section Z10, *General Performance Technical Specifications*. In addition to the Z10 requirements, the Designer of Record (DOR) shall approve the following submittals as a minimum:

All structural elements necessary for construction

Contractor-provided geotechnical report

Controlled fill or backfill material tests

Test pile and production pile installation records

Pile load testing reports

As-Built drawings - Include a statement on the drawings indicating the method used to verify the allowable design capacity of the piles (load tests or PDA).

A1010 STANDARD FOUNDATIONS

A1010 1.1 SHEETING AND SHORING

Provide sheeting and shoring as required. Sheeting and shoring plans shall be signed by the Contractor's Geotechnical Engineer.

A1010 1.2 TERMITE CONTROL

A1010 1.2.1 Termite Control Barrier System

Formulate and apply termiticide in accordance with the manufacturer's label directions. The termiticide label shall bear evidence of registration by the U.S. Environmental Protection Agency or appropriate requirements of the host country.

Apply termiticide to the soil that will be covered by or lie immediately adjacent to the building(s) and structure(s), providing a protective barrier against subterranean termites.

Maintain the Pest Management Maintenance Record, DD Form 1532-1 and submit the Pest Management Report, DD Form 1532 as required.

Applicator(s) shall be licensed or certified by the Federal government or the state or the host country, as applicable.

A1010 1.2.2 Warranty

Furnish a 3 year written warranty against infestations or reinfestation by subterranean termites of the buildings or building additions constructed under this contract. Perform annual inspections of the building(s) or building addition(s). If live subterranean termite infestation or subterranean termite damage is discovered during the warranty period, and building conditions have not been altered in the interim, the Contractor shall:

a. Perform treatment as necessary for elimination of subterranean termite infestation;
b. Repair damage caused by termite infestation;
c. Reinspect the building approximately 180 calendar days after the repair.

A1010 1.2.3 Visual Inspection Guide

To maintain resistance to termites, complete the system and do not disturb, penetrate or damage during the remaining contract time period. Provide Manufacturer’s Guidance for performing a visual assessment of the installed system to ensure the system provides the designed termite physical barrier.

A101001 WALL FOUNDATIONS

Provide foundation walls as required in accordance with the requirements of this section and other portions of this RFP.

A101002 COLUMN FOUNDATIONS AND PILE CAPS

Provide column foundations or pile caps and grade beams as required in accordance with the requirements of this section and other portions of this RFP.

A1020 SPECIAL FOUNDATIONS

A102001 PILE FOUNDATIONS

Where piles are required, design, install, and test piles (including sheet piles, as applicable) in accordance with UFC 1-200-01, except as noted otherwise. Provide piles in accordance with the requirements of the Contractor’s Geotechnical Engineer, and the following paragraphs.

A102001 1.1 DRIVING EQUIPMENT

Install piles (including sheet piles, as applicable) to the required tip elevation and capacity with the appropriate equipment as recommended by the Contractor's Geotechnical Engineer. Pile hammer shall be of sufficient weight and energy to suitably install piles without damage.

Drive production piles with the same hammer, cap block, and cushion materials, and using the same operating conditions as test piles, including pre-augering and spudding.

Pile driving equipment shall match the equipment assumptions on which the pile driving formulae used to determine blow counts are based.

A102001 1.2 INSTALLATION TOLERANCES

Locate the center of pile butts not more than four horizontal inches from the location indicated at cutoff elevation. Manipulation of the piles is not permitted. In addition to the stated tolerances, the clear distance between the heads of piles and the edges of pile caps shall be a minimum of five inches.

Locate top of sheet piles at cutoff elevation within 1/2 inch horizontally and 2 inches vertical of the location indicated. Manipulation of the piles is not permitted.

A variation of not more than 2 percent from the vertical for plumb piles, or not more than 4 percent from the required angle for batter piles will be permitted.

A102001 1.3 MISLOCATED AND DAMAGED PILES

Remove and replace with new piles those piles that are damaged, mislocated, or installed out of alignment tolerance or provide additional piles, installed as directed by the Contractor's Geotechnical Engineer and approved by the Contracting Officer, at no additional cost to the Government.

A102001 1.4 PILE SPACING

For cast-in-place concrete or auger cast piles, provide adequate distance, as determined by the Contractor's Geotechnical/Structural Engineer, between freshly placed concrete and other pile installation operations to avoid damage to concrete.

A102001 1.5 COATED PILES

Handle treated or coated piles so as to protect the treatment or the coating. Repair damage or defects to treatment or coating.

A102002 CAISSONS

If required, provide caissons as required in accordance with the requirements of this section and other portions of this RFP.

A102003 UNDERPINNING

If required, underpin existing construction as required in accordance with the requirements of this section and other portions of this RFP.

A102004 DEWATERING

Dewater site for foundation construction as required by soil conditions and local subsurface and surface water, including rainfall, and considering any potential adverse impact on adjacent facilities, including settlement. Dewatering requirements and methods shall be established by the Contractor’s Geotechnical Engineer, based on his subsurface exploration and investigation.

A102005 RAFT FOUNDATIONS

If required, provide a raft foundation as required to achieve the requirements of this section and other portions of this RFP and as required by the Contractor’s Geotechnical Engineer.

A102006 PRESSURE INJECTED GROUTING

If required, pressure inject grout as required in accordance with the requirements of this section and other portions of this RFP.

A1030 SLAB ON GRADE

A103001 STANDARD SLAB ON GRADE

If allowed by site conditions and recommended by the Contractor-provided Geotechnical Engineer, provide standard concrete slab on grade to meet the required loading requirement in accordance with the requirements of this section and other portions of this RFP.

Floor slab on grade shall be designed and constructed in accordance with EM 1110-1-1904, Settlement Analysis and so that any settlement of the floor slab shall not result in harmful distortion of the floor, nor vertical misalignment of the floor with other building components (such as doorways and trenches), building utilities or with pile-supported building elements. If these above conditions cannot be met, provide a pile supported slab.

A103003 TRENCHES

Trenches shall be constructed of reinforced concrete with water proof joints and seals to prevent ground water infiltration.

A103004 PITS AND BASES

Pits and bases shall be constructed of reinforced concrete with water proof joints and seals to prevent ground water infiltration.

A103005 FOUNDATION DRAINAGE

A103005 1.1 PERIMETER FOUNDATION DRAINAGE

Perimeter drainage system shall be provided to remove water away from the foundation of the facility and to be deposited in the storm sewerage system of the site. Pipe for the foundation drainage system shall be of the type specified, shall be perforated, and shall be of a size sufficient to remove water from the foundation successfully. Provide one, or a combination of more than one, of the following types of pipe:

a. Corrugated Polyethylene (PE) Drainage Pipe: ASTM F 405, heavy duty, for pipe 3 to 6 inches in diameter inclusive; ASTM F 667 for pipe 8 to 24 inches in diameter. Fittings shall be manufacturer's standard type and shall conform to the indicated specification.
b. Acrylonitrile-Butadiene-Styrene (ABS) Pipe: ASTM D 2751, with a maximum SDR of 35.
c. Polyvinyl Chloride (PVC) Pipe: ASTM F 758, Type PS 46, ASTM D 3034, or ASTM F 949 with a minimum pipe stiffness of 46 psi.

Installation shall include wrapping the pipe with filter fabric sock and careful bedding of the pipe with appropriate fill material to ensure that the pipe does not become obstructed with the bedding material.

A103090 OTHER SLAB ON GRADE

-- End of Section --

SECTION B10

SUPERSTRUCTURE
11/10

B10 GENERAL

RFP Part 3 including the Engineering System Requirements (ESR) provide project specific requirements. The RFP Part 4 Performance Technical Sections (PTS) provide generalized technical requirements that apply to multiple facility types and include more requirements than are applicable to this project. Therefore RFP Part 4 requirements that correspond and further define the RFP Part 3 requirements are specific to this project, other RFP Part 4 requirements are not required.

B10 1.1 DESIGN GUIDANCE

Provide the design and installation in accordance with the following references. This Performance Technical Specification (PTS) adds clarification to the fundamental requirements contained in the following Government Standards. The general requirements of this PTS section are located in PTS Section Z10, *General Performance Technical Specification*.

B10 1.1.1 Government Standards

UFC 1-200-01	General Building Requirements(A reference in this PTS section to UFC 1-200-01 requires compliance with the Tri-Service Core UFCs that are listed in UFGS Section 01 33 10.05 20, which includes the following significant UFC(s):UFC 3-100-10N, Architecture UFC 3-301-01, Structural Engineering)
UFC 4-023-03	Design of Buildings to Resist Progressive Collapse

B10 1.2 PERFORMANCE VERIFICATION AND ACCEPTANCE TESTING

Verification of satisfactory construction and system performance shall be via Performance Verification Testing, as detailed in this section of the RFP. Provide special tests and special inspections in accordance with UFGS Section 01 45 00.05 20, *Design and Construction Quality Control*.

B10 1.3 DESIGN SUBMITTALS

Design submittals shall be in accordance with Z10, General Performance Technical Specifications, UFGS section 01 33 10.05 20, *Design Submittal Procedures*, UFC 1-300-09N, *Design Procedures*, UFC 3-100-10N, *Architecture*, and UFC 3-301-01, *Structural Engineering*.

B10 1.4 CONSTRUCTION SUBMITTALS

Submit construction submittals in accordance with PTS Section Z10, *General Performance Technical Specifications*. In addition to the Z10 requirements, the Designer of Record (DOR) shall approve the following

submittals as a minimum:

All structural elements necessary for construction of the superstructure.

B1010 FLOOR CONSTRUCTION

B101001 STRUCTURAL FRAME

Structural frame elements may include columns, girders, beams, trusses, joists, moment frames, shear walls, and bracing. See Section B20, *Exterior Enclosure*, for additional requirements for exterior walls used as load-bearing walls or shear walls.

B101002 STRUCTURAL INTERIOR WALLS

Provide structural interior walls as required in accordance with the requirements of this section and other portions of this RFP. See Section C10, *Interior Construction*, for additional requirements.

B101003 FLOOR SLABS

Provide floor slabs as required in accordance with the requirements of this section and other portions of this RFP.

B101007 FLOOR RACEWAY SYSTEMS

See Section D50, Electrical, for floor raceway systems.

B1020 ROOF CONSTRUCTION

B102001 STRUCTURAL FRAME

Structural frame elements may include columns, girders, beams, trusses, joists, moment frames, shear walls, and bracing. See Section B20, *Exterior Enclosure*, for additional requirements for exterior walls used as load-bearing walls or shear walls.

B102002 STRUCTURAL INTERIOR WALLS

Provide structural interior walls as required in accordance with the requirements of this section and other portions of this RFP. See Section C10, *Interior Construction*, for additional requirements.

B102003 ROOF SLABS

Provide roof slab as required in accordance with the requirements of this section and other portions of this RFP.

B102004 CANOPIES

Provide canopies as required in accordance with the requirements of this section and other portions of this RFP.

-- End of Section --

SECTION B20

EXTERIOR ENCLOSURE
11/10

B20 GENERAL

B20 1.1 DESIGN GUIDANCE

Provide the design and installation in accordance with the following references. This Performance Technical Specification (PTS) adds clarification to the fundamental requirements contained in the following Government Standards. The general requirements of this PTS section are located in PTS Section Z10, *General Performance Technical Specification*.

Industry standards, codes, and Government standards referenced in the section text that are not found in the Unified Master Reference List (UMRL) in the Construction Criteria Base (CCB) at the Whole Building Design Guide Website , are listed below for basic designation identification. Comply with the required and advisory portions of the current edition of the referenced standard at the time of contract award.

B20 1.1.1 Industry Standards and Codes

NATIONAL LUMBER GRADES AUTHORITY (NLGA)

B20 1.1.2 Government Standards

Military Handbook 1013/1A, Design Guidance for Physical Security of Facilities

UNIFIED FACILITIES CRITERIA (UFC)

UFC 1-200-01	General Building Requirements(A reference in this PTS section to UFC 1-200-01 requires compliance with the Tri-Service Core UFCs that are listed in UFGS Section 01 33 10.05 20, which includes the following significant UFC(s):UFC 3-100-10N, Architecture)

B20 1.2 PERFORMANCE VERIFICATION AND ACCEPTANCE TESTING

Verification of satisfactory exterior enclosure system performance shall be via Performance Verification Testing, and by field inspection as detailed in this section of the RFP. Provide special tests and special inspections in accordance with UFGS Section 01 45 00.05 20, *Design and Construction Quality Control*. The Contractor shall pay the cost of all testing.

B20 1.2.1 Required Brick Masonry Testing and Field Samples

a. Where field testing is required, masonry strength shall be determined in accordance with ACI 530.1.
b. Field Samples: Masonry Panel Requirements - At the job site submit for approval by the Designer of Record, a sample

masonry panel minimum 8 feet (2.4 meters) long by a minimum of 4 feet (1.2 meters) high. Actual Sample size will be determined by number of components in the sample wall but provide a span of at least 4 feet (1.2 meters) of uninterrupted brickwork and 2 feet (.6 meters) above wall openings. The approved sample shall exhibit the standard for workmanship and materials for the project. The sample panel shall include brick coursing, bond, weep holes, flashing, thickness, anchors, joint reinforcing, wall ties, rigid-board insulation, intersection of walls, bond beams, expansion and control joints, and tooling of joints, range of color, texture of masonry, and mortar color; or cold-formed steel framing, insulation, fiberglass-faced gypsum sheathing, air barrier, air barrier connections to adjoining construction, sealing of air barrier penetrations vapor barrier, sealant, masonry ties and anchors, and tooling of joints, the range of color and texture of brick veneer, and the color of mortar. The sample panel shall be protected from damage and shall remain at the site until masonry work is complete and approved, at which time the panel shall be removed from the site. If there are windows or curtain walls in the project which interface with the masonry, a cut-away sample window or curtain wall mock-up shall be installed in the masonry field panel, with all accessories, finishes, and trim (see B20 1.2.4 and 1.2.5). Masonry work shall match the approved sample.

B20 1.2.2 Precast Concrete Wall Panel Surface Finish Sample

Submit to DOR a concrete wall panel sample 12 inches (300 mm) by 12 inches (300 mm) by approximately 1 1/2 inches (38 mm) in thickness, to illustrate quality, color, and texture of both exposed-to-view surface finish and finish of panel surfaces that will be concealed by other construction. Obtain initial approval of color and texture from DOR prior to submission of sample panels.

B20 1.2.2.1 Manufacturing Plant Sampling And Testing for Precast

Plant Quality Control - PCI MNL-117 for PCI enrolled plants. Where panels are manufactured by specialists in plants not currently enrolled in the PCI "Quality Control Program," provide a product quality control system in accordance with PCI MNL-117 and perform concrete and aggregate quality control testing using an approved, independent commercial testing laboratory. Submit test results to the Contracting Officer.

a. Aggregate Tests: ASTM C 33. Perform one test for each aggregate size, including determination of the specific gravity.
b. Strength Tests: ASTM C 172. Provide ASTM C 39 and ASTM C 31/C 31M compression tests. Perform ASTM C 143 slump tests. Mold six cylinders each day or for every 20 cubic yards (15 cubic meters) of concrete placed, whichever is greater. Perform strength tests using two cylinders at 7 days and two at 28 days. Cure four cylinders in the same manner as the panels and place at the point where the poorest curing conditions are offered. Moist cure two cylinders and test at 28 days.
c. Changes in Proportions: If, the compressive strength

falls below that specified, adjust the mix proportions and water content and make necessary changes in the temperature, moisture, and curing procedures to secure the specified strength. Notify the Contracting Officer of all changes.

d. Strength Test Results: Evaluate compression test results at 28 days in accordance with ACI 214 using a coefficient of variation of 20 percent. Evaluate the strength of concrete by averaging the test results (two specimens) of standard cylinders tested at 28 days. Not more than 20 percent of the individual tests shall have an average compressive strength less than the specified ultimate compressive strength.

B20 1.2.2.2 Acceptable Appearance

Refer to *Architectural Precast Concrete* by the Pre-stressed Concrete Institute, in the "Acceptability of Appearance" paragraph for reasons to reject precast panels. Panels in place may be rejected for any one of the product defects or installation deficiencies remaining after repairs and cleaning have been accomplished. "Visible" means visible to a person with normal eyesight when viewed from a distance of 20 feet (6 meters) in broad daylight.

B20 1.2.3 Window Sample Mock-Up

a. Provide mock up of one (1) typical combination window unit to be used within the project and conduct a field mock-up test in strict compliance with AAMA 502 method A and method B. Each opening will be tested to achieve performance of ASCE 7-02 calculated requirements (PSF or Kg/m2) for water resistance, which shall not exceed .667 % of the products capable water based on AAMA 101/I.S. 2. Allowable rates of air leakage for field testing shall be 1.5 times applicable AAMA 101/I.S.2 rate for the Product Type and Performance Class.

b. Opening is to be tested under "Quality Control" testing by a designated independent testing agency.

1) Schedule mock up installation sufficiently in advance of need to allow adequate time for cure of sealants, testing and reconstruction, if needed, without delaying the project.

2) Build mock up in building envelope wall in location selected by Owner and Architect.

3) Modify mock up construction and perform additional tests as required to achieve specified minimum acceptable results. If corrections are not adequate, construct new mock up, at written direction of Owner and Architect. Co-ordinate construction of mock up with other involved trades.

4) Approved mock ups may become part of completed Work if undisturbed at time of Substantial Completion.

5) Flood test Mockup window sub-sill and obtain approval of DOR prior to installing window unit.

B20 1.3 DESIGN SUBMITTALS

Design submittals shall be in accordance with Z10, *General Performance*

Technical Specifications, UFGS section 01 33 10.05 20, *Design Submittal Procedures*, UFC 1-300-09N, *Design Procedures*, UFC 3-100-10N, *Architecture* and UFC 3-301-01, *Structural Engineering*.

B20 1.4 CONSTRUCTION SUBMITTALS

Submit construction submittals in accordance with PTS Section Z10, *General Performance Technical Specifications*. In addition to the Z10 requirements, the Designer of Record(DOR) shall approve the following submittals as a minimum;

Shop drawings for reinforcing steel in masonry walls, doors, door hardware, windows, storefront, curtain wall, glazing, paint, air barrier system, and visible exterior materials.

All structural elements necessary for construction.

B20 1.4.1 Manufacturer's Verification Inspection Documentation for Galvanized Steel

Manufacturer's verification inspection documentation shall be submitted for all galvanized steel in accordance with ASTM A123, ASTM A 153, and ASTM A 653.

B20 1.4.2 Field Inspection of Field-erected Concrete Panels

a. Perform field inspection of panel welded connections. Furnish the services of AWS-certified welding inspector for erection inspections. Welding inspector shall visually inspect all welds and identify all defective welds.
b. The DOR shall be notified in writing of defective welds, bolts, nuts and washers within 7 working days of the date of inspection. All defective connections or welds shall be removed and re-welded or repaired as required by the DOR.

B2010 EXTERIOR WALLS

Exterior wall construction shall consist of exterior skin system of non-structural outside face elements with rain-screen back-up wall systems including; flashing (embedded, exposed, and thru-wall), vapor barriers, air barriers, and insulation systems with interior skin system materials to provide a protective finish on the inside face of exterior walls. Provide all components necessary to direct water that would leak through faulty caulk joints to the outside of wall. Provide flashing, window sub-sill, caulking, and water barriers around wall openings to direct any water that gets behind the outside surface of the exterior door, window or louver to the exterior of the wall.

All work shall be designed to comply with UFC 3-100-10N, *Architecture*, and UFC 3-301-01, *Structural Engineering*, and the following requirements:

a. Vapor Transmission Analysis - Perform a job specific vapor transmission analysis in accordance with UFC 3-100-10N, Architecture. The conclusion of the analysis shall indicate the appropriate locations of needed vapor retarders, air barriers, and anticipated dew-point locations in the exterior enclosure during different critical times of the year.
b. Wind Loads - Provide wind load calculations for exterior cladding in accordance with UFC 1-200-01 and UFC 3-301-01 with comparative analysis of the cladding system to be provided.
c. Water Penetration - No water penetration shall occur at a pressure of 8

psf (39 Kg/m2) of fixed area when tested in accordance with ASTM E 331.

d. Insulating Value – The complete wall system shall have a minimum insulating value as required by the building code and as required to meet ASHRAE Standard 90.1 as modified by the Energy Policy Act of 2005.

B201001 EXTERIOR CLOSURE

B201001 1.5 CONCRETE EXTERIOR WALL CLOSURE

B201001 1.5.1 Precast Concrete Wall Panels:

ACI 211.1 and ACI 301. PCI MNL-116 or PCI MNL-117. Concrete shall have a minimum 28-day compressive strength of 4000 psi (281 Kg/cm2). Air content of plastic concrete shall be between 4 and 6 percent air by volume. Provide a dosage of air entraining agent, which will produce 19 plus or minus 3 percent air in a 1 to 4 by weight standard sand mortar in accordance ASTM C 185. Provide aggregate in accordance with ASTM C 33. Design for watertight joints, or weeping joints having back-up water penetration protection in precast elements. Cracking potential of precast concrete elements shall be minimized by implementing expansion and control joints in the precast assembly.

Joints shall include properly sized and placed backing material and fully loaded and tooled sealant joint of no less than 1/4 inch sealant material thickness.

a. Exposed Aggregates - In addition to the above aggregate, facing mixture aggregate, and aggregate for homogeneous panels with exposed aggregate finish, shall be crushed stone.
b. Cement - ASTM C 150.
c. Admixtures - ASTM C 260 for air-entraining admixtures. Other admixtures: ASTM C 494. Certify that admixtures are free of chlorides.
d. Reinforcement - ACI 301.
e. Inserts - ASTM A 47, Grade 32510 or 35018, or may be medium strength cast steel conforming to ASTM A 27/A 27M, Grade U-60-30. Where exposed to moisture, provide inserts hot-dip galvanized after fabrication in accordance with ASTM A 153/A 153M.
f. Embedded Plates - ASTM A 36/A 36.
g. Flashing Reglets - Fabricate of sheet metal, open-type with continuous groove 1 1/8 inches (28 mm) deep minimum by 3/16 inch (5 mm) wide at opening and sloped upward at 45 degrees. Top surface shall have toothed lip section to anchor upturned edge of metal snap-lock counter flashing when inserted. Sheet metal shall be stainless steel, 0.011 inch (0.28 mm) minimum thickness, ASTM A 167, Type 302 or Type 304, Number 2D finish, soft temper.
h. Clip Angles - ASTM A 36/A 36M steel, galvanized after fabrication in accordance with ASTM A 153/A 153M.
i. Ferrous Casting Clamps - ASTM A 47, Grade 32510 or Grade 35018 malleable iron or cast steel, or ASTM A 27/A 27M, Grade U-60-30, cast steel casting, hot-dip galvanized in accordance with ASTM A 153/A 153M.
j. Threaded Fasteners – Provide galvanized machine bolts, washers and, when required, nuts.

1) Bolts: ASTM A 449, 3/4 inch (19 mm) diameter machine bolts with hexagon head.

2) Washers: ANSI B18.21.1, medium or heavy lock-spring

washers.

3) Nuts: ASTM A 563, Grade C, heavy, hexagon-type nuts.

4) Square Nuts: ASTM A 563, Grade A, plain.

B201001 1.10.2 Concrete Unit Masonry

Masonry walls shall comply with ACI 530.1. Load-bearing units: ASTM C90, Non-load bearing- units: ASTM C129, Type I or II. Provide ground face units, split-faced units, ground-faced units, or split-ribbed units for exposed exterior walls. Provide water repellent admixture to masonry units where the exterior face of the units will not receive a waterproof coating such as paint. Mortar shall conform to ASTM C 270, Type S. Test mortar in accordance with ASTM C 780. Provide water repellent admixture and color additive in mortar for masonry walls that will not receive a waterproof coating such as paint. Do not use admixtures containing chlorides. Provide air entrainment, not to exceed 12 percent, in mortar.

a. Adjustable Anchors for Structural Members - Use adjustable anchors to anchor masonry structural steel columns or beams. Weld the fixed portion of the anchors (steel anchor rods) to the structural steel member. Provide adjustable anchors 3/16 inch (5 mm) diameter steel wire, triangular-shaped. Anchors attached to steel shall be 5/16 inch (8 mm) diameter steel bars placed to provide 1/16 inch (1.6 mm) play between flexible anchors and structural steel members.
b. Deformed Bars - ASTM A 615/A 615M, ASTM A 616/A 616M, ASTM A 617/A 617M, or ASTM A 706/A 706M.

B201002 EXTERIOR WALL BACKUP CONSTRUCTION

B201002 1.2 LOAD-BEARING METAL FRAMING SYSTEM

Exterior Studs:

Max. Deflection Criteria	Exterior Finish
L/360	Cement Plaster, Wood Veneer, Synthetic Plaster, Metal Panels
L/600	Brick Veneer, Stone Panels

Wall deflections shall be computed on the basis that studs withstand all lateral forces independent of any composite action from sheathing materials. Studs abutting windows or louvers shall also be designed not to exceed 1/4-inch maximum deflection and as required in UFC 4-010-01.

a. Studs - ASTM A 1003/ASTM A 1003M, Structural Grade 50, Type H minimum; provide Z180 (G60) galvanized coating in accordance with ASTM A 653/ASTM A 653M. Do not expose studs to direct moisture contact. Studs shall be stamped with manufacturer's name, initials, or logo, an ICBO number, material thickness and yield strength. Size and gage shall be as required to meet the loading requirements specified.
b. Bracing - Provide horizontal bracing in accordance with design calculations and AISI SG-673, consisting of, as a minimum, runner channel cut to fit between and welded to the studs or hot- or cold-rolled steel channels inserted through cutouts in the web of

each stud and secured to studs with welded clip angles. Provide bracing, as a minimum, at 5 feet (1.52 meters) o.c. for wind load only, and 3"-4"(1.0 meters) o.c. for axial loads.

c. Sheathing - Provide sheathing to withstand structural loads imposed on the wall structure. Cover sheathing with either a 15 pound asphalt-impregnated building paper, or air barrier as required by the wall moisture analysis. Sheathing shall be one of the following:

1) Plywood: C-D Grade, Exposure 1, with an Identification Index of not less than 24/0.

2) Structural-Use and OSB Panels: Sheathing grade with durability equivalent to Exposure 1, Span Rating of 24/0 or greater.

3) Gypsum: ASTM C 79/C 79M and ASTM C 1177/C 1177M, 1/2 inch (13 mm) thick fire retardant (Type X) 5/8 inch (15 mm) thick; 4 feet (1.2 meters) wide with square edge for supports 16 inches (400 mm) o.c. with or without corner bracing of framing. Gypsum sheathing shall be faced with materials capable of resisting six months of weathering exposure without degradation of the covering or the gypsum. Seal all joints as recommended by the manufacturer.

B201002 1.3 CAST-IN-PLACE CONCRETE SYSTEM

a. Unless otherwise noted herein, all concrete design and construction must be in accordance with UFC 1-200-01.
b. Concrete construction must be in accordance with ACI 301.
c. Refer to Performance Verification Testing for Cast-in-place field quality control.
d. Concrete construction tolerances must be in accordance with ACI 117.
e. Design for watertight joints, or weeping joints having back-up water penetration protection in precast elements. Cracking potential of precast concrete elements shall be minimized by implementing expansion and control joints in the precast assembly.
f. Joints shall include properly sized and placed backing material and fully loaded and tooled sealant joint of no less than 1/4 inch sealant material thickness.

B201003 INSULATION & VAPOR RETARDER

Insulation, Vapor Retarders, and Air Barrier Systems in or on Exterior Enclosure shall include: insulation, liquid, sheet or continuous film materials installed separately in or on wall assemblies to provide resistance to heat loss/gain, and vapor penetration.

B201003 1.1 VAPOR RETARDER

Comply with ASTM C755. Incorporate in the exterior wall system where required by vapor transmission calculations or dew point analysis indicates the need or in conditions of high moisture exposure.

B201003 1.1.1 Bituminous Dampproofing

Bituminous Dampproofing shall be ASTM D449, Type I or Type II bituminous dampproofing on the exterior surface of the interior wythe of masonry in a cavity wall (back-up wall for masonry veneer).

B201003 1.1.2 Polyethylene sheeting

ASTM 4397, minimum 6 mil thickness. Provide typically on the interior face of insulated, wood or metal stud wall construction, unless a moisture vapor analysis indicates otherwise. (Poly sheeting on the interior surface of the studs is not recommended for cold, mixed-humid, mixed-dry, hot-humid or hot-dry climates.)

B201003 1.3 INSULATION SYSTEMS

Vertical and horizontal polystyrene insulation conforming to ASTM C578 or rigid polyisocyanurate board wall insulating products conforming to ASTM C591 or mineral-fiber blanket insulation conforming to ASTM C 665 shall be provided. Wall insulating product shall have a minimum R-value to meet the code and the energy design of the facility. Seal the joints in rigid insulation within cavity/veneer walls for additional moisture and air infiltration protection.

B201004 PARAPETS

Avoid parapets when possible, but when necessary, provide parapets with the same materials as the exterior wall construction, including framing members, anchors, flashings, cants, and accessories. Parapets shall be designed to withstand the lateral loads prevailing at the project site and be provided with thru-wall flashing below the parapet cap, at structural members, at penetrations, and at the roof level. Provide flashing and scuppers in accordance with SMACNA.

B201005 EXTERIOR LOUVERS & SCREENS

If required, provide louvers, which are not an integral part of the mechanical equipment, exterior closures, grilles and screens, storm shutters, and other materials used for a variety of purposes including screening of equipment or as louvers for exterior doors.

Louvers, screens, grilles in shall be selected in a color and design that is compatible with the fabric of the exterior architectural character as described below. For frame construction, install in accordance with ASTM E 2112.

B201005 1.1 WALL LOUVERS

Wall louvers shall be drainable blade type louver with blade slopes of 45 degrees minimum, but provide wind driven rain rated louvers for wall louvered rooms without a floor drain within the room. Louvers shall be made to withstand a wind load of not less than 30 psf (146 Kg/m2), .08 inch (2 mm) thick 6063-T5 or T52 extruded aluminum in a factory-finished color in accordance with AAMA 2605 with a minimum coating thickness of 1.2 mil to match the building facade. Wall louvers shall bear the AMCA certified ratings program seal for air performance and water penetration in accordance with AMCA 500 , 500L (wind driven rain), and AMCA 511. Provide sill flashing with sloped drain pan at base of louver to collect moisture that migrates down the interior face of the louver. This sill flashing shall drain water to the outside of the building. Louvers shall have bird screens.

B201005 1.2 SCREENED EQUIPMENT ENCLOSURE

Design and fabricate support frames to withstand wind loads. Anchor frames securely in place. Provide secondary horizontal steel or aluminum framing for attachment of screen materials. Screen material shall be factory finished coating in accordance with AAMA 2605 with a minimum

coating thickness of 1.2 mils. Formed metal panels from galvanized steel sheet per ASTM A 653 or aluminum sheet per ASTM B 209.

B201005 1.3 STORM SHUTTERS

B201005 1.3.2 Accordion Shutters

Accordion shutters shall have factory-finished aluminum alloy 6063-T5/T6 slats and tracks. Accordion shutter shall have stainless steel wheel carriers, nylon wheels and guides with stainless steel fasteners and be capable of being locked in a closed position by a non-key device.

B201005 1.3.4 Removable Shutters

Removable shutters shall have formed factory finished 0.050 inch (1.27 mm), 3003-H16 aluminum panels and continuous 6063-T5/T6 header and base frame with stainless steel fasteners or spring tempered stainless steel clips.

B201006 BALCONY WALLS & HANDRAILS

B201009 EXTERIOR PAINTING AND SPECIAL COATINGS

B201009 1.1 GENERAL REQUIREMENTS

Painting practices shall comply with applicable federal, state and local laws enacted to insure compliance with Federal Clean Air Standards. Apply coating materials in accordance with SSPC PA 1. SSPC PA 1 methods are applicable to all substrates.

All paint shall be in accordance with the Master Painter Institute (MPI) standards for the exterior architectural surface being finished. The current MPI, "Approved Product List" which lists paint by brand, label, product name and product code as of the date of contract award, will be used to determine compliance with the submittal requirements of this specification. The Contractor may choose to use a more current MPI "Approved Product List"; however, only one list may be used for the entire contract. All coats on a particular substrate, or a paint system, must be from a single manufacturer. No variation from the MPI Approved Products List is acceptable.

MPI paint systems identified in the RFP take precedence over other available MPI systems. The RFP does not identify all paint system applicable to all painting of the facility, therefore utilize the *MPI Architectural Painting, Exterior Systems Manual* to identify other appropriate paint systems for the project. Utilize the "Premium Grade" systems and comply with all limitations stated in the MPI "Approved Product List" for each paint product. Products having an MPI EPR 3 rating shall be given preferential consideration over lower EPR ratings. Use higher performing paint systems unless the lower performing paint system can be justified based on a lifecycle cost to include surface preparation, application, disposal, environmental impact, and required recoating cycles. Only use paint products that have been tested for MPI'S "DETAILED PERFORMANCE". Do not use products that have been tested for "INTENDED USE".

Paints and coatings shall comply with Master Painters Institute Green Performance Standard GPS-1-08 which is available at the following website;
http://www.specifygreen.com/EvrPerf/EnvironmentalPerformance.html .
Choose paints that provide performance, are environmentally friendly,

and that conform to but do not exceed EPA or local environmental regulations, whichever requires the lowest VOC content.

Remove dirt, splinters, loose particles, grease, oil, and other foreign matter and substances deleterious to coating performance as specified for each substrate before application of paint or surface treatments. For existing buildings, use MPI *Maintenance Repainting Manual* to determine the coatings that need to be removed. Remove deteriorated or loose coatings before repainting begins. Oil and grease shall be removed prior to mechanical cleaning. Cleaning shall be programmed so that dust and other contaminants will not fall on wet, newly painted surfaces. Exposed ferrous metals such as nail heads on or in contact with surfaces to be painted with water-thinned paints, shall be spot-primed with a suitable corrosion-inhibitive primer capable of preventing flash rusting and compatible with the coating specified for the adjacent areas. Notwithstanding MPI requirements, clean exterior ferrous metal that is exposed to weather conditions (wind, precipitation, solar degradation, and humidity) to a SSPC SP 10 level (near white).

B201009 1.1.1 MPI Gloss Levels

Gloss levels shall comply with the MPI system of determining gloss as defined in the Evaluation sections of the MPI Manuals. Utilize the performance characteristics of the paint gloss and sheen to categorize paint rather than manufacturers' description of the product.

The MPI gloss Levels are indicated by the notation G1, G2, G3, G4, G5, G6, or G7. Use G2 "Velvet-like" flat for vertical surfaces and undersides of balconies and soffits. Use G3 "Eggshell-like" in high "traffic areas for ceilings and walls, when a surface can be touched and a slightly more durable finish is desired, and for dark accent colors. Use G5 Semi-gloss for ceilings, walls, doors and trim for high durability and cleanability. Use G6 Gloss only in special situations such as for exterior wood and metal, piping identification, or special effects. The MPI gloss and sheen standard values are per ASTM D523, method D and are as follows:

Gloss Level Number	Gloss@60 Degrees	Sheen@85 Degrees
Gloss Level 1(G1)-Matte or Flat	Max.5 units	Max.10 units
Gloss Level 2(G2)-"Velvet-like" Flat	Max. 10 units	10-35 units
Gloss Level 3(G3)-"Eggshell-like"	Max. 10-25 units	10-35 units
Gloss Level 4(G4)-"Satin-like	Max. 20-35 units	Min. 35 units
Gloss Level 5(G5)-Semi-Gloss	35-70 units	
Gloss Level 6(G6)-Gloss	70-85 units	
Gloss Level 7(G7)-High Gloss	More than 85 units	

B201009 1.1.2 MPI System Designations and Table Abbreviations

The MPI coating system number description is found in either the *MPI Architectural Painting Specification Manual* or the *Maintenance Repainting Manual* and defined as an exterior system

a. EXT - MPI short-term designation for an exterior coating system on a new surface.
b. REX - the MPI short term designation for an exterior coating system used in repainting projects or over existing coating systems.
c. DSD - the MPI short-term designation for Degree of Surface Degradation as defined in the Assessment sections in the *MPI*

Maintenance Repainting Manual. Degree of Surface Degradation designates the MPI Standard for description and appearance of existing condition of surfaces to be painted. This DSD classification is used to determine the proper surface preparation necessary for painting.

d. DFT – The short-term designation for dry film thickness. DFT is the minimum acceptable depth or thickness of a coating or system in the dry state. The maximum acceptable DFT is not more than 50% greater than the minimum acceptable DFT (example... DFT = 2 mils, maximum DFT = 3 mils). The DFT indicated in the paint systems below relate to new coatings - MPI INT. MPI RIN will be less than the indicated DFT.

e. Paint Systems Abbreviations: BF – block filler; C – clear coat; SP – spot primer ;P – primer coat; I – intermediate coat; T – topcoat; .

B201009 1.1.3 Surface Preparation

Comply with the "Exterior Surface Preparation" section of the *MPI Architectural Painting Specification Manual* or the Exterior Surface Preparation" section of the *MPI Maintenance Repainting Manual*. All suggestive language such as "may" or "should" are deleted from the standard and "must" or "shall" inserted in its place. Suggestive language such as "recommended" or "advisable" is deleted from the standard and "require" or "required" inserted in its place. The results of these wording substitutions change this document to required procedures. For surface preparation, determine a MPI DSD Assessment of each surface and comply with the MPI Surface Preparation Requirements relating to the assessments.

B201009 1.2 EXTERIOR CONCRETE FINISHES

New and Existing, previously painted concrete, vertical surfaces, undersides of balconies and soffits, but excluding tops of slabs:

a. Latex, System DFT: 3.5 mils

1) MPI EXT 3.1A/ REX 3.1L-G3/G4 (Low sheen); P: MPI 3, I: MPI 15, T: MPI 15

New and Existing, previously painted concrete floors, patios, and walkways with low contact and traffic. Not for high abuse, wheel traffic, or high humid area applications:

a. Latex, System DFT: 3.5 mils

1) MPI REX 3.2A-G2/G3 (Low gloss); P: MPI 60, I: MPI 60, T: MPI 60

B201009 1.3 EXTERIOR CONCRETE MASONRY FINISHES

New and Existing, previously painted concrete masonry:

a. Latex, System DFT: 11 mils

1) MPI EXT 4.2A-G3/G4 (Low sheen) / REX 4.2-G5; BF:MPI 4, P:MPI 15, I: MPI 15, T: MPI 15

New and Existing Profiled Block (Split Faced Block)

a. Latex System DFT: 11 mils

1) MPI EXT 4.2L-G3/4 (Satin-like) P: MPI 3 I: MPI 15 T: MPI 15

B201009 1.4 EXTERIOR METAL FINISHES

B201009 1.4.1 New and existing steel that has been blast cleaned to SSPC SP 6 & 10:

a. Alkyd, System (in SSPC Zones 1B and 2A) DFT: 5.25 mils

1) MPI EXT/ REX 5.1D-G5 (Semi-gloss); P:MPI 79, I:MPI 94, T:MPI 9

b. Waterborne Light Industrial (in SSPC Zones 1B, 3A, 3B, and 3C), System DFT: 8.5 mils

1) MPI EXT 5.1R-G5 (Semi-gloss); P:MPI 101, I:MPI 108, T:MPI 163

B201009 1.4.2 New Galvanized surfaces:

a. Epoxy P/Waterborne Light Industrial (Use MPI 25 cleaner), System DFT: 4.5 mils

1) MPI EXT 5.3K-G5 (Semi-gloss); P:MPI 101, I:MPI 161, T:MPI 161

B201009 1.4.3 Galvanized surfaces with slight coating deterioration, with little or no rusting:

a. Epoxy P/Waterborne Light Industrial Coating (Use MPI 25 cleaner), System DFT: 4.5 mils

1) MPI EXT 5.3K-G5 (Semi-gloss); P:MPI 101, I:N/A, T:MPI 163

B201009 1.4.4 Galvanized surfaces with severely deteriorated coating or rusting:

a. Epoxy P/Waterborne Light Industrial Coating (Use MPI 25 cleaner), System DFT: 8.5 mils

1) MPI EXT 5.3K-G5 (Semi-gloss); P:MPI 101, I:MPI 163, T:MPI 163

B201009 1.5 EXTERIOR WOOD FINISHES

B201009 1.5.1 New and existing uncoated doors including backprime, top, bottom, edges of doors, and dressed lumber and plywood not specified otherwise:

a. Alkyd, System DFT: 5 mils

1) MPI EXT 6.3B-G5 (Semi-gloss); P:MPI 7, I:MPI 94, T:MPI 94

b. Latex, System DFT: 5 mils (Not for human or abrasive contact areas)

1) MPI EXT 6.3A-G5 (Semi-gloss); P:MPI 7, I:MPI 11, T:MPI 11

B201009 1.5.2 Existing dressed lumber or plywood, including top, bottom, and edges of doors previously coated with an alkyd / oil based finish:

a. Alkyd, System DFT: 5 mils

1) MPI REX 6.3B-G5 (Semi-gloss); P:MPI 5, I:MPI 94, T:MPI 94

b. Latex, System DFT: 5 mils (Not for human or abrasive contact areas)

1) MPI REX 6.3A-G5 (Semi-gloss); P:MPI 5, I:MPI 11, T:MPI 11

B201009 1.5.3 Existing dressed lumber or plywood, including top, bottom, and edges of doors previously coated with an latex / waterborne finish:

a. Latex, System DFT: 4.5 mils

1) MPI REX 6.3L-G5 (Semi-gloss); P:MPI 6, I:MPI 11, T:MPI 11

B201009 1.5.4 New and existing dressed lumber or plywood, including stairs and decks:

a. Latex, System DFT: 4.5 mils(not for use in high traffic areas)

1) MPI REX 6.5A-G5/G6 (Low gloss); P:MPI 5, I:MPI 60, T:MPI 60

B201009 1.6 EXTERIOR STUCCO FINISHES

B201009 1.6.1 New and existing stucco or plaster:

a. Latex, System DFT: 4.5 mils

1) MPI EXT/REX 9.1J-G3/G4 (Low sheen); P:MPI 3, I:MPI 15, T:MPI 15

2) MPI EXT/REX 9.1J-G5 (Semi-gloss); P:MPI 3, I:MPI 11, T:MPI 11

B201010 EXTERIOR JOINT SEALANT

Sealant joint design, priming, tooling, masking, cleaning and application shall be in accordance with the general requirements of *Sealants: A Professionals' Guide* from the Sealant, Waterproofing & Restoration Institute (SWRI). All sealant shall conform to ASTM C 920.

Joints shall include proper backing material for sealant support during application, control of sealant depth, and to act as a bond breaker. Use filler boards, backer rods and bond breaker tapes. Provide priming unless specifically not recommended by the sealant manufacturer. Applied sealant shall be tooled. Tooling shall not compact sealant too less than the minimum sealant thickness required. Mask adjacent surfaces to control sealant boundaries during sealant application.

B2020 EXTERIOR WINDOWS

Standard windows shall be in compliance with ANSI/AAMA/WDMA 101, SWI SWS, UFC 4-010-01, and the design criteria of ASCE 7 for glazed windows to meet the Building Code.

If required, provide windows that meet the requirements of AAMA/WDMA

101/I.S.2. Residential construction shall utilize windows that comply with AAMA LC-25 designation unless the wind pressure on the building exceeds 38 psf (185 Kg/m2). Commercial (non-residential) construction shall utilize windows that comply with AAMA designation HC-40 (60 psf - 293 Kg/m2) for windows that do not have to meet anti-terrorism requirements, and HC-60 (90 psf - 439 Kg/m2) for commercial windows that are required to meet anti-terrorism requirements, unless the wind pressure or blast pressure on the building exceeds the design pressure for these minimum windows. Determine the wind pressure on the building by converting the ASCE-7 basic wind speed to wind pressure and find the corresponding structural test pressure in the AAMA specific requirements or optional performance tables. If the residential window wind pressure exceeds of 38 psf (185 Kg/m2) or the commercial (non-residential) window wind pressure exceeds 60 psf (293 Kg/m2) or exceeds 90 psf (439 Kg/m2), utilize a higher AAMA designated window complying with the calculated wind pressure. Anti- Terrorism window systems (including connections) shall meet the testing requirements of UFC 4-010-01 when tested in accordance with ASTM F1642.

Comply with ASTM E 2112 and with flashing and weather-resistive barrier manufacturers' recommendations to install windows in framed wall construction. Comply with window flashing details from BIA for masonry back-up and veneer walls. Engineer and install window cleaning access and anchorage to the exterior wall for facilities over three stories tall without interior window cleaning access from pivoting or tilting sash. Provide anchors in accordance with OSHA standard 29 CFR Section 1910.66.

Windows shall be provided with sills on the exterior and stools on the interior of the opening. Sills shall be special shape or cut unit masonry or precast concrete in masonry exterior construction and extruded aluminum or aluminum-wrapped wood framing or formed metal in other construction. Positively slope sills away from windows. Window stools shall be slate or solid polymer for commercial construction and painted wood for residential construction.

B202001 WINDOWS

Exterior windows shall consist of fixed and operable sash used singly and in multiples. Provide operable sash in spaces occupied by people as a minimum. Include operating hardware, non-corroding framed metal screens for operable sash, integrated blinds set between glass panels and security grilles. Provide jamb support for larger windows where recommended by manufacturer. Metal windows with insulating glass shall have thermally broken frames and sash.

Provide glazing in exterior windows in accordance with section B202004 EXTERIOR GLAZING.

B202001 1.1 STANDARD WINDOW SYSTEMS

B202001 1.1.2 Aluminum Windows

Conform to ANSI/AAMA/WDMA 101. Factory finish aluminum windows and provide with aluminum frame screens with aluminum mesh at operable sash, hardware and locks, and tinted glazing. Aluminum screens shall comply with ANSI/SMA 1004.

Exposed aluminum surfaces shall be factory finished with an AA 45 anodic coating or an AAMA organic coating. Provide a minimum of architectural Class II anodized coating or a baked enamel finish conforming to AAMA 2604 for residential construction. Provide a minimum of architectural Class I anodized coating or a high-performance organic coating conforming to AAMA 2605 for non-residential (commercial) construction. AAMA coatings shall have a

total dry film thickness of 1.2 mils.

B202001 1.1.3 Security Windows

Security windows delay forced entry into the building through the windows. In addition to meeting the requirements of AAMA 101, windows designated "resistance to forced entry" shall conform to the requirements of AAMA 1302.

B202002 1.1.1 Doors And Frames

Provide doors complete with frames, framing members, sub-frames, transoms, adjoining sidelights, adjoining window wall, trim, and accessories, as required for a complete installation. Anchors shall be stainless steel. Weather-stripping shall be Continuous wool pile, silicone treated, or type recommended by door manufacturer. See B203008, EXTERIOR DOOR HARDWARE for hardware requirements.

B202002 1.1.2 Aluminum Alloy for Doors and Frames

ASTM B 221, Alloy 6063-T6 for extrusions. ASTM B 209, alloy and temper best suited for aluminum sheets and strips.

B202002 1.1.3 Fabrication

a. Aluminum Frames: Provide removable glass stops and glazing beads for frames accommodating fixed glass. Use countersunk stainless steel Phillips screws for exposed fastenings, and space not more than 12 inches (300 mm) o.c.. Mill joints in frame members to a hairline fit, reinforce, and secure mechanically.
b. Aluminum Doors: Doors shall be medium or wide stile. Doors shall be not less than 1-3/4 inches (44 mm) thick. Minimum wall thickness, 0.125 inch (3.175 mm), except beads and trim, 0.050 inch (1.27 mm). Bevel single-acting doors at lock, hinge, and meeting stile edges. Double-acting doors shall have rounded edges at hinge stile, lock stile, and meeting stile edges.
c. Finishes: Provide exposed aluminum surfaces with factory finish of anodic coating conforming to AA45, Architectural Class I or an organic coating conforming to AAMA 2605 with a total dry film thickness of not less than 1.2 mils.

B202003 1.1.5 Tolerances

Design and erect wall system to accommodate tolerances in building frame and other contiguous work. Provide with the following tolerances:

a. Maximum variation from plane or location shown on DOR-approved shop drawings: 1/8 inch (3 mm) per 12 feet (3.7 meters) of length up to not more than 1/2 inch (13 mm) in any total length.
b. Maximum offset from true alignment between two identical members abutting end to end in line: 1/16 inch (1.6 mm).

B202003 1.1.6 Structural Requirements

Deflection and Structural Tests: No curtain wall framing member

shall deflect, in a direction normal to the plane of the wall, more than 1/175 of its clear span or 3/4 inch (20 mm), whichever is less, when tested in accordance with ASTM E 330, except that when a plastered or gypsum board surface will be affected the deflection shall not exceed 1/360 of the span. No framing member shall have a permanent deformation in excess of 0.2 percent of its clear span when tested in accordance with ASTM E 330 for a minimum test period of 10 seconds at 1.5 times the design wind pressures specified.

B202003 1.1.7 Thermal Movement

Fabricate, assemble, and erect system with adequate allowances for expansion and contraction of components and fastenings to prevent buckling damage, joint seal failure, glass breakage, undue stress on fastenings or other detrimental effects.

B202004 EXTERIOR GLAZING

Provide setting and sealing materials, stops and gaskets as recommended by the glass or acrylic sheet manufacturer.

Provide warranty for insulating glass units for a period of 10 years against development of material obstruction to vision (such as dust or film formation on the inner glass surfaces) caused by failure of the hermetic seal, other than through glass breakage. The Contractor shall require the glazing warranty for curtain wall glazing to be written directly to the Government.

Provide warranty for polycarbonate sheet glazing for a period of 5-years against breakage, coating delamination, and yellowing.

Glazing thickness indicated in the following paragraphs is the minimum acceptable thickness. Provide thicker glazing if required by the manufacturer for the given application.

B202004 1.1 GLASS

B202004 1.1.1 Clear Glass

Type I, Class 1 (clear), Quality q4 (A).

B202004 1.1.2 Heat-Absorbing Glass

ASTM 1036, Type I, Class 2 (heat absorbing and light reducing), Quality q3 (select), 1/4 inch (6 mm) thick, with a light transmittance of approximately 45 percent and total solar transmittance of not more than 50 percent for 1/4 inch (6 mm) thickness. Use warm color tint for warm color frames and cool color tints for white and gray frames.

B202004 1.1.3 Wire Glass

B202004 1.1.3 Wire Glass

Type II, Class 1, Form 1, Quality q8 Mesh m1 or Form 2, Quality q7, Finish f1, Mesh m1, 1/4 inch (6 mm) thick. Conform to NFPA 80. Glass for fire-rated windows shall be UL listed and shall be rated when tested in accordance with ASTM E 163.

B202004 1.1.4 Laminated Glass

ASTM 1172, fabricated from two pieces of Type I, Class 1, Quality q3 glass laminated together with a clear 0.030 inch (0.75 mm) thick polyvinyl butyral interlayer. The total thickness shall be nominally 1/4 inch (6 mm). Laminated glass used for anti-terrorism window assemblies must be a minimum of 1/4 inch (6 mm) thickness.

B202004 1.1.5 Insulating Glass Units

Provide insulated glass using a combination of the interior and exterior glazing materials listed below filled with a thermal resistive gas. The air space shall be sized to meet the thermal requirements below but not less than one half inch(12 mm) for non-residential construction and one quarter inch(6 mm) minimum for residential construction.

Provide active solar control glazing by using tinting, maximum thermal resistance, special coatings to meet Energy Star climate zone and window type requirements(including frames), and comply with the performance characteristics below. Provide an active low-emissivity coating on glass surface number 2 (the inside surface of the exterior glass pane).

If the building is located in a heat dominated climate zone, the facility is designed to utilize solar heat gain to augment the HVAC system, and the window overhang design prohibits excessive solar gain; a passive low-emissivity coating may be used to accommodate the design. Occupied spaces adjoining passive low-emissivity coated glass must be designed for comfortable use of the space.

Provide two panes of glass separated by a dehydrated airspace and hermetically sealed. Dimensional tolerances shall be as specified in IGMA TR-1200. The units shall conform to ASTM E 773 and ASTM E 774, Class A. Provide primary seal, secondary seal, and spacers to eliminate moisture and hydrocarbon vapor transmission into airspace. Warranty insulating glass units against development of material obstruction to vision (such as dust, fogging, or film formation on the inner glass surfaces) caused by failure of the hermetic seal for a 10-year period following acceptance of the work.

The interior glass pane shall be one of the following:

1. Typically ASTM C 1036, Type I, Class 1, Quality q4, minimum 1/4 inch (6 mm) thick;
2. ASTM C 1048, Grade B (fully tempered), Style I (uncoated), Type I, Class 1 (transparent), Quality q4, minimum 1/4 inch (6 mm) thick when required by ANSI Z97.1 or possible human impact is anticipated;
3. ASTM C 1172, laminated glass as specified above, when required by antiterrorism requirements.

The exterior glass pane shall be one of the following:

1. Typically ASTM C 1036, Type I, Class 2 (tinted heat absorbing or reflective), Quality q4, minimum 1/4 inch (6 mm) thick;
2. ASTM C 1048, Grade B (fully tempered), Style I (uncoated), Type I, Class 2 (tinted heat absorbing or reflective), Quality q4, minimum 1/4 inch (6 mm) thick when required by

ANSI Z97.1 or possible human impact is anticipated.

Insulating glass performance for active solar control using low-emissivity coatings:

1. Visible Light Transmission, 66% or lower

2. Outdoor Light Reflectance, 11% or greater

3. Solar Heat Gain Coefficient, .36 or lower

4. Winter U-Value, .35 Btu/square foot x hr x degree F or lower for residential construction and .29 Btu/square foot x hr x degree F or lower for all other types of construction.

B202004 1.1.6 Tempered Glass

ASTM C 1048, Kind FT (fully tempered), Condition A (uncoated), Type I, Class 1 (transparent) or 2 (tinted heat absorbing, Quality q3, 1/4 inch (6 mm) thick.

B202004 1.1.7 Bullet-Resisting Glass

ASTM 1172 and UL 752, fabricated from Type I, Class 1, Quality q3 glass with polyvinyl butyral plastic interlayers between the layers of glass and listed by UL ABPMED as bullet resisting, with a power rating of Medium—Small Arms, High—Small Arms, Super—Small Arms, High—Rifle, or as required by the building program in accordance with UL 752.

B202004 1.1.8 Patterned Glass

ASTM 1036, Type II, Class 1 (translucent), Form 3 (patterned), Quality q7 (decorative), Finish f1 (patterned one side), Pattern p2 (geometric) 7/32 inch (5.55 mm) thick.

B202004 1.1.9 Spandrel Glass

ASTM C 1048, Kind HS or FT, Condition B (ceramic coated), Type I, Quality q5, 1/4 inch (6 mm) thick.

B202004 1.1.10 Spandrel Glass with Adhered Backing

ASTM C 1048, Kind HS or FT, Condition B (ceramic coated), Type I, Quality q5, 1/4 inch (6 mm) thick and shall pass the fallout resistance test specified in ASTM C 1048.

B202004 1.2 PLASTIC GLAZING

All plastic glazing exposed to the interior or exterior environment shall have an applied hardcoat.

B202004 1.2.1 Acrylic Sheet Glazing

ASTM D 4802, Type I, regular, Type II, heat resistant, in various thicknesses, clear or colored.

B202004 1.2.2 Polycarbonate Sheet Glazing

ASTM D 3595, ANSI Z97.1, Mar-resistant, Clear and smooth both sides when used for vision glazing; Translucent, textured both

sides when used for obscure glazing, tint to match frame, ultraviolet stabilized, thickness to be specified in mm and inches, and listed in UL ABPMED as burglar resisting. Mar-resistant sheet shall have a change in haze of between 5 and 8 percent under silica carbide test, 56.44 ounces (1600 grams), ASTM D 673.

B202004 1.3 FRAGMENT RETENTION FILM FOR GLAZING

Existing windows that will not be replaced in the project shall have fragment retention film if they require antiterrorism protection. The film shall be polyester, polyethylene terephthalate, or a composite. Fragment retention film shall be optically clear and free of waves, distortions, impurities, and adhesive lines. The film may be a single layer or laminated. Lamination of the film shall only occur at the factory of the fragment retention film manufacturer. The film shall include an abrasion resistant coating on the surface that does not receive the film adhesive. Fragment retention film shall be a minimum thickness of 0.004 inch (0.1016 mm), or 0.007 inch (0.1778 mm), or 0.010 inch (0.254 mm). The film shall be supplied with an optically clear weatherable pressure sensitive adhesive. The adhesive shall contain ultraviolet inhibitors to protect the film for its required life and shall limit ultraviolet transmission to not more than 8 percent of the radiation between 300 and 380 nanometers. The adhesive shall not be water activated. A water-soluble detackifier or release liner may be incorporated over the adhesive to facilitate film application. The adhesive shall be 90 percent cured within 30 days of installation. Adhesives on film thicknesses of 0.010 inch (0.254 mm) and greater shall be a minimum of 0.0008 inch (0.02032 mm) thick.

B202090 OTHER EXTERIOR WINDOWS

B2030 EXTERIOR DOORS

Exterior doors shall be heavy duty insulated steel doors and frames for service access. Door frames shall be welded. Corner knockdown door frames are not permitted.

Use heavy-duty overhead holder and closer to protect doors from wind damage. Provide kickplates on the inside face of all exterior doors.

Weather-protect all exterior doors and related construction with low infiltration weatherstripping and sealants. Provide threshold with offset to stop water penetration while maintaining accessibility compliance.

Conform to the design criteria of ASCE 7.

See section B203008, EXTERIOR DOOR HARDWARE, for door hardware requirements. For all installations, provide a recessed key box (Knox Box) approximately 7 inches x 7 inches (175 mm x 175 mm) with 4-3/4 inches (120 mm) solid steel door at primary exterior entry for storage of keys and access cards accessible by the fire department.

B203001 SOLID DOORS

B203001 1.1 STEEL DOORS

Hardware preparation shall be in accordance with ANSI A250.6. Doors shall be hung in accordance with ANSI A115.16.

B203001 1.1.1 Steel Doors

Steel doors shall be ANSI A250.8, Level 4, exterior, main entry doors, with a physical performance level of, Model 1 or 2.

Doors may be specified to be insulated. Door selection shall be specified in the project program according to the following:

a. Standard Duty Doors - Level 1, physical performance Level C, Model [1] [2]
b. Heavy Duty Doors - physical performance Level B, Model [1] [2]
c. Extra Heavy Duty Doors – ANSI A250.8, Level 3, physical performance Level A, Model [1] [2] [3]
d. Maximum Duty Doors – ANSI A250.8, Level 4, physical performance Level A, Model [1] [2]

B203001 1.1.2 Residential Insulated Steel Entry Door Systems

Insulated steel doors and frames shall be provided for residential construction with a core of polyurethane foam and an R factor of 10.0 or more (based on a k value of 0.16). Face sheets, edges, and frames of galvanized steel not lighter than 23 gage thick (0.7 mm) for paneled door faces, or 16 gage thick (1.5 mm) for solid doors, with vinyl door bottom flashing. Frames shall be a minimum 16 gage thick (1.5 mm) respectively; with magnetic weatherstripping; nonremovable-pin hinges; thermal-break aluminum threshold. Doors and frames shall receive phosphate treatment, rust-inhibitive primer, and baked acrylic enamel finish. Doors shall have been tested in accordance with ANSI A250.4 and shall have met the requirements for Level C. Prepare doors to receive specified hardware. Doors shall be 1-3/4 inch (44.5 mm) thick.

B203001 1.1.3 Insulation Cores

Insulated cores shall be of type specified, and provide an apparent U-factor of .48 in accordance with SDI 113 and shall conform to:

a. Rigid Polyurethane Foam: ASTM C591, Type 1 or 2, foamed-in-place or in board form, with oxygen index of not less than 22 percent when tested in accordance with ASTM D2863; or
b. Rigid Polystyrene Foam Board: ASTM C578, Type I or II; or
c. Mineral board: ASTM C612, Type I.

B203001 1.1.4 Accessories

a. Louvers shall comply with SDI 111-C, shall be stationary, sight-proof type. Use lightproof louvers if function of room requires darkness. Louver frames shall be 20-gage steel with louver blades minimum 24 gage.
b. Astragals: For pairs of exterior steel doors that will not have aluminum astragals or removable mullions, provide overlapping steel astragals with the doors.
c. Moldings: Provide moldings around glass of exterior doors and louvers. Provide non-removable moldings on outside of exterior doors. Secure inside moldings to stationary moldings, or provide snap-on moldings. Muntins shall interlock at intersections and shall be fitted and welded to stationary moldings.

B203001 1.1.5 Standard Steel Frames

ANSI A 250.8. Form frames with welded corners for installation in exterior walls. Form stops and beads of 20 gage steel. Frames shall be set in accordance with ASTM A250.11.

B203001 1.1.6 Anchors

Anchor all frames with a minimum of three jamb anchors and base steel anchors per frame, zinc-coated or painted with rust-inhibitive paint, not lighter than 18 gage. Mortar infill frames in masonry walls, and infill with gypsum board compound at each jamb anchor in metal frame walls. Only use surface exposed bolted anchors in concrete walls.

B203001 1.1.7 Finishes

a. Exterior Doors, Factory-Primed and Field Painted Finish - Doors and frames shall be factory primed with a rust inhibitive coating as specified in ANSI A250.8. Factory prime doors on six sides of the door. Manufacturer's primer and field painting shall be compatible with finish system in the paragraph "EXTERIOR PAINTING AND SPECIAL COATINGS".
b. Exterior Doors Galvanized Finish - Shall be Commercial Quality, Coating Class A, zinc coating in accordance with ASTM A 591 when facility is located further than 300 feet (91 meters) from the ocean. When facility is located within 300 feet (91 meters) of the ocean, provide G60 galvanized coating in accordance with ASTM A 924/A 924M and ASTM A 653/A 653M.

B203003 OVERHEAD AND ROLL-UP DOORS

Large exterior overhead and roll-up doors system shall consist of manual or automatic exterior doors and door assemblies. Do not use roll-up doors on exterior walls of conditioned spaces.

B203004 1.1 ROLLING SERVICE DOORS AND GRILLES

Coiling overhead doors shall have minimum 22 gage thermal insulated slats. Electric operators shall have 3-button switches conforming to NEMA MG 1, NEMA ICS 1, and NEMA ICS 2, and auxiliary hand chain operation, weather-stripping and wind-locks. Doors shall be capable of withstanding the design wind loading of ASCE 7 and still operate normally. Finish of the door shall be hot-dipped galvanized with a painted finish.

B203008 EXTERIOR DOOR HARDWARE

Provide the services of an Architectural Hardware Consultant(AHC), Certified Door Consultant(CDC), or an Electrified Hardware Consultant(EHC) to assist the Designer of Record in preparation of the door hardware schedule and product selection. The hardware consultant shall sign and seal the door hardware construction submittal. Provide, as far as possible, door hardware of one manufacturer’s make. All hardware shall be clearly and permanently marked by the manufacturer where it will be visible after installation.

B203008 1.1 HINGES

BHMA A156.1, size to match door size, but in no case less than 4-1/2 x 4-1/2 inches (114 mm x 114 mm), with non-removable pin and anti-friction bearing hinges. Use two hinges for doors 60 inches (1500 mm) or less in height and one additional hinge for each additional 30 inches (750 mm), or fraction thereof, in door height.

B203008 1.2 PIVOTS

BHMA A156.4.

B203008 1.3 LOCKS AND LATCHES

Commercial (all construction except family housing) buildings locks and latches shall be BHMA A 156.13, Series 1000, Operational Grade 1, Security Grade 2 for exterior building entrances and other high-use doors not requiring exit devices. Use BHMA A 156.2, Series 4000, Grade 1 for all Commercial buildings locks and latches not using Series 1000 hardware.

For Residential (family housing) projects, use Series 4000, Grade 2 hardware.

B203008 1.3.1 Combination Locks for Sensitive Areas and Vault Doors

If required for exterior use, see C102007 1.1.6 "Combination Locks" for the specification. This installation may require special weather protection.

B203008 1.3.2 Pushbutton Combination Locks

Where required, provide a heavy-duty, mechanical combination lockset with 5 pushbuttons, standard-sized knob or lever, 3/4 inch (19 mm) deadlocking latch with 2-3/4 inch (70 mm) back-set. Provide deadbolt key override option. Safelock, Simplex, and Venn are acceptable manufacturers. Provide a hardware grade equivalent to Grade 1, series 4000. Include a 5-year parts and labor warranty.

B203008 1.4 EXIT DEVICES

BHMA A 156.3, Grade 1. Provide on exit doors if it is anticipated that more than 50 people may use a particular door in an emergency exit situation. Touch bars shall be provided in lieu of conventional crossbars and arms. Use manufacturer's integral touch bars in aluminum storefront doors.

B203008 1.5 CARD KEY SYSTEM

Where required, provide card key type access units. Provide lithium battery powered, magnetic stripe keycard locksets that are ANSI/BHMA A156.13, Series 1000, Grade 1, mortise or ANSI/BHMA A156.2, Series 4000, Grade 1, cylindrical locks, tamper resistant, UL listed with 1 inch (25 mm) throw deadbolt, 3/4-inch (19 mm) throw latch bolt, auxiliary deadlocking latch, and 2-3/4 inch (68.75 mm) backset. The latch bolt and the dead bolt shall be operated simultaneously by rotating inside lever. Locks with mechanical override lock cylinders are not acceptable. Locks shall be operated only by a correctly encoded keycard. Use of a newly issued keycard automatically re-keys the lock and voids the previous keycard. The lock shall re-lock immediately after outside lever is turned and latch retracted. Locks shall have memory that is capable of recording up to 140 entries into each room, identification of the keycard used to access the room, the date and time of entry. Entry information of the lock shall be retrievable by a data key that can be inserted into the lock and then taken to the front desk printer to display information. Other components that are required for this system at the front desk are a personal or laptop computer, printer and encoder to program each key.

For exit device locks with card key access, provide mortise type, narrow stile exit devices with 24 volt DC, solenoid option for card key exterior access at aluminum storefront doors. Provide mortise type exit devices with 24 volt DC, solenoid option with alarm and remote exterior access for card key access at insulated hollow metal doors. The alarmed exit device shall sound when exiting only.

System shall be capable of accepting a minimum of 12 keycard access levels, security auditing and computer interfacing with existing installations management system. Provide a single point of contact customer service representative accessible by telephone with a 10-digit telephone number without additional dialing hierarchies except that a maximum 4-digit extension is permissible. On-site service shall be provided within 3 hours from request within the first 12 months of occupancy. Provide a 5-year parts and labor warranty

B203008 1.6 EXIT LOCKS WITH ALARM

BHMA A 156.5.

B203008 1.7 CYLINDERS AND CORES

If required, provide cylinders and cores for new locks, including locks provided under other sections of this specification. Cylinders and cores shall have seven pin tumblers. Cylinders shall be products of one manufacturer, and cores shall be the products of one manufacturer. Rim cylinders, mortise cylinders, and knobs of bored locksets shall have interchangeable cores, which are removable by special control keys. Stamp each interchangeable core with a key control symbol in a concealed place on the core.

B203008 1.8 KEYING SYSTEM

Keying system shall be a master key system for the facility, unless more than one tenant/tenant command shall reside in a facility, or a grand master keying system, or great, grand master keying system if multiple tenants or buildings are required. The keying system shall be an extension of the existing keying system for additions to existing facilities. The keying system shall allow for construction interchangeable cores when subcontractors require keys during construction. If required, provide a key cabinet.

The Contractor shall coordinate a keying system meeting. The Contractor's Project Manager, Superintendent, Hardware Subcontractor, Electrical Subcontractor (if keying hardware is electric), Designer of Record, Contracting Officer, Public Works Base Hardware Specialist, and the Using Activity shall attend this meeting to establish the keying system for the project. This meeting is intended to identify base limitations, the necessary security, and access control within the facility. The meeting shall produce a marked up copy of the floor plan indicating the doors to receive locks and the doors to be keyed together, and any master keying or grand master keying.

B203008 1.9 KEYS

Furnish one file key, one duplicate key and one working key for each key exchange and for each master and grand master keying system.

B203008 1.10 LOCK TRIM

Cast, forged or heavy wrought construction and commercial plain in design.

B203008 1.10.1 Knobs and Roses

Knobs and roses shall meet test requirements of BHMA A 156.2 and BHMA A 156.13.

B203008 1.10.2 Lever Handles

Provide lever handles in lieu of knobs as required by DoD ABAAS. Lever handles shall meet the test requirements of BHMA A 156.13 for mortise locks. All lever handles (mortise or cylinder) shall be the freewheeling type.

B203008 1.11 DOOR BOLTS

BHMA A 156.16, Grade 1. Provide two flush bolts for each inactive leaf of a pair of doors.

B203008 1.12 CLOSERS

BHMA A 156.4, Series C02000, Grade 1, with PT 4C, 1-1/2 inch piston, heavy duty forged arm, full size case. Provide closers for all exterior doors, fire-rated doors, corridor doors, stairway doors, and secure area doors, for non-residential (commercial) construction, as a minimum.

B203008 1.13 OVERHEAD HOLDERS

BHMA A 156.8, Grade 1. Provide for exterior doors for non-residential (commercial) construction.

B203008 1.14 DOOR PROTECTION PLATES

Kick plates shall conform to BHMA A 156.6. Provide kick plates on all doors with closers and all doors leading to corridors or circulation spaces. Provide armor plates on all doors to receive cart traffic. Provide mop plates on all doors in rooms with a mopable floor finish that do not have kick plates.

B203008 1.15 DOOR STOPS AND SILENCERS

BHMA A 156.16. Provide silencers, Type L03011, three per single door and four per double door, for doors in hollow metal frames.

B203008 1.16 THRESHOLDS

BHMA A 156.21. Provide thresholds with offset to stop water infiltration, while maintaining accessibility requirements.

B203008 1.17 WEATHERSTRIPPING

BHMA A 156.22. Air leakage of weathers-tripped doors shall not exceed 0.5 CFM of air per square foot of door for residential doors, and 1.25 CFM for non-residential doors (unless a more restrictive infiltration level is specified).

B203008 1.18 RAIN DRIPS

For all exterior doors that open to the outside, where the door swing area is not covered by an overhang, provide top and bottom rain drips complying with ANSI R3Y535 as a minimum. Greater weathersealing may be required by the geographic location of the project.

B203008 1.19 FINISHES

One of the following hardware finish systems shall be provided, and match the interior door hardware:

a. BHMA A156.18. Hardware shall have BHMA 630 finish (satin stainless steel), unless specified otherwise. Provide items not manufactured in stainless steel in BHMA 626 finish (satin chromium plated) over brass or bronze, except surface door closers which shall have aluminum paint finish, and except steel hinges which shall have BHMA 652 finish (satin chromium plated). Hinges for exterior doors shall be stainless steel with BHMA 630 finish or chromium plated brass or bronze with BHMA 626 finish. Exit devices may be provided in BHMA 626 finish in lieu of BHMA 630 finish. Exposed parts of concealed closers shall have finish to match lock and door trim. Hardware for aluminum doors shall be finished to match the doors.

b. BHMA A156.18. Hardware shall have BHMA 612 finish (satin bronze), unless specified otherwise. Surface door closers shall have bronze paint finish. Steel hinges shall have BHMA 639 finish (satin bronze plated). Exposed parts of concealed closers shall have finish to match lock and door trim. Hardware for aluminum doors shall be finished to match the doors. Hardware showing on interior of bathrooms, shower rooms, toilet rooms, washrooms, laundry rooms, and kitchens shall have BHMA 629 finish (bright stainless steel) or BHMA 625 finish (bright chromium plated).

B203090 OTHER EXTERIOR SPECIALTY DOORS

Where required, provide special function exterior doors and gates and assemblies required for the proper operation and functioning of the facility. Exterior doors system may include factory-finished or painted doors and frames.

-- End of Section --

SECTION B30
ROOFING
4/08

B30 GENERAL

B30 1.1 DESIGN GUIDANCE

Provide the design and installation in accordance with the following references. This Performance Technical Specification (PTS) adds clarification to the fundamental requirements contained in the following Government Standards. The general requirements of this PTS section are located in PTS Section Z10, *General Performance Technical Specification*.

Industry standards, codes, and Government standards that are referenced in the section text that are not found in the Unified Master Reference List (UMRL) in the Construction Criteria Base (CCB) at the Whole Building Design Guide Website are listed below for basic designation identification. Comply with the required and advisory portions of the current edition of the standard at the time of contract award.

B30 1.1.1 Government Standards

UNIFIED FACILITIES CRITERIA (UFC)

UFC 3-100-10N, *Architecture*

UFC 3-110-03, *Roofing*

B30 1.2 PERFORMANCE VERIFICATION AND ACCEPTANCE TESTING

Verification of satisfactory roofing system performance shall be via Performance Verification Testing, and by field inspection as detailed in this section of the RFP.

B30 1.2.1 Pre-Roofing Conference

Prior to beginning roofing work, the Contractor shall hold a Pre-Roofing Conference with the personnel directly responsible for the roofing systems work, as well as the roofing manufacturer's technical representative. At this time the Contractor will address any conflicts between the proposed roofing system, the design documents, and the scheduling of work / workers (trades) to assure a watertight roofing installation. Resolutions will be obtained and documented in writing prior to the start of roofing work. A quality assurance/quality control plan shall also be established at this time, inclusive of the roofing manufacturer’s recommended testing and inspections procedures, and in accordance with industry standard guidelines.

Contractor shall provide the following additional information at the pre-roofing conference: Procedure for the roof manufacturer’s technical representative's onsite inspection and acceptance of the roofing substrate, roof insulation, and installation of the roofing in accordance with the roof system warranty, the name of the manufacturer's technical representatives, the frequency of the onsite visits, copies of the roof status reports from the technical representatives to the roof manufacturer, and pertinent structural details to the roofing system.

B30 1.2.2 Roof Design Assurance

If the roofing project is significant (Significant Roof - A single or group of buildings greater than 15,000 sf (1,400 m2)), or where extenuating circumstances of the roof project such as building use, content, safety, or visibility require a roofing consultant, the Contractor shall utilize the services of a Registered Roof Consultant (RRC) certified by the Roof Consultant Institute, or a Registered Professional architect or Engineer who specializes in roofing, to approve the roof design. The roof consultant must be engaged in roofing design and roofing construction as his primary endeavor. The roof consultant shall verify in writing that the design for the project is in accordance with the current edition of NRCA *Roofing and Waterproofing Manual*, UFC's, and RFP, and standard industry practices and building codes.

If a Roof Design Assurance Consultant is needed, consider using a Registered Roof Observer as a QC specialist in UFGS Section 01 45 00.05 20, *Design and Construction Quality Control*.

B30 1.2.3 Low Slope Roof Drain Test

Plug roof drains and fill with water to the edge of the drain sump for 24 hours. Not all drains shall be tested at one time. Measure water at the beginning and end of the 24 hour time period to ensure there is no leakage. Repeat testing until all leaks have been located, corrected, and no leaks found.

B30 1.2.4 Tests for Surface Dryness

Prior to application of roofing materials, perform surface dryness tests in presence of DOR. Asphalt of 350 to 400 degrees F (177 to 204 degrees C) shall not foam upon contact with substrate. After foaming test is performed, test for strippability (adherence).

B30 1.2.5 Quality Control Program

Contractor shall establish a quality control program to assure adherence to NRCA recommended Quality Control Guidelines for the Application of Roofing Systems and other specified application requirements. Compliance with UFGS Section 01 45 00.05 20, *Design and Construction Quality Control*, is required.

B30 1.3 DESIGN SUBMITTALS

Design submittals shall be in accordance with Z10, *General Performance Technical Specifications*, UFGS section 01 33 10.05 20, *Design Submittal Procedures*, UFC 1-300-09N, *Design Procedures* and UFC 3-100-10N, *Architecture*.

B30 1.4 CONSTRUCTION SUBMITTALS

Submit construction submittals in accordance with PTS Section Z10, *General Performance Technical Specifications*. In addition to the Z10 requirements, the Designer of Record (DOR) shall approve the following submittals as a minimum:

Test reports, color samples, certificates of conformance, warranties, close out documentation, and manufacturer’s instructions for application and installation on all products used on the roof. Products used on the roof consist of but are not limited to structural deck, insulation, membrane or panels, Standing Seam Metal Roofing (SSMR), flashing, fasten-

ers, nailers, and accessories.

B3010 ROOF COVERINGS

Roof coverings shall comply with the requirements of UFC 3-110-03, *Roofing*, and NRCA, *Roofing and Waterproofing Manual* found at http://www.nrca.net/rp/technical/manual/manual.aspx as the primary NAVFAC roofing criteria. Roof selection shall comply with UFC 3-330-02A, *Design: Commentary on Roof Systems*. Determine wind uplift using wind speed in accordance with ASCE-7.

Submit the INFORMATION CARD (see "Form 1" at the end of this section) Provide a typewritten card, laminated in plastic and framed in a weather-tight frame, or a photoengraved 0.032-inch (0.81 mm) thick aluminum card for the roof. This card shall be a minimum size of 8 1/2 x 11 inch (216 x 280 mm) and contain information listed in the attached Form 1. Install the card where directed. Furnish framed card and a duplicate card to the Designer of Record.

B301002 LOW SLOPE ROOF SYSTEMS

B301002 1.1 GENERAL REQUIREMENTS

a. Warranty (Except SSSMRS) - Furnish the roofing system manufacturer's materials and workmanship warranty for the roofing system. The warranty period shall not be less than 20 years from the date the Government acceptance of the work. The warranty shall be issued directly to the Government and shall not be limited in dollar value. The system warranty shall include roofing membrane, insulation, flashings, accessories and attachments.
b. Wind Uplift - The complete roof covering assembly shall be rated in accordance with FM P7825, capable of withstanding an uplift pressure as determined by ASCE-7, and FM I-49 for perimeter and flashing attachment.
c. Fire Safety - The complete roof covering assembly shall meet ASTM E 108, Class 1A or UL 790, Class A; and be listed as Fire-Classified roof deck construction in the UL RMSD, or Class I roof deck construction in FM P7825. All components of the system shall be UL labeled. Complete roof covering assembly shall:1) Be Class A or B rated in accordance with ASTM E 108 , FM 4470, or UL 790; and2) Be listed as part of Fire-Classified roof deck construction in UL RMSD, or Class I roof deck construction in FM P7825c.
d. Traffic Pads - Provide on roof system to protect roof from foot traffic. Provide traffic pads from roof access to and around roof mounted mechanical equipment and underneath removable mechanical equipment access panels. Traffic pads shall be of compatible material to roof.

B301002 1.2 LIQUID-APPLIED ELASTOMERIC ROOFING

This paragraph covers the requirements for liquid-applied elastomeric roofing directly applied over concrete roofs.

B301002 1.2.1 Materials

a. Single component, multi-layered application of fluid-applied silicone materials with non-woven polyester reinforced fabric to prevent moisture migration and penetration during rain and high temperature, high humidity thermal cycling. The system shall have Class I Roofing System Recognition as tested by Factory Mutual (FM P7825) or other accredited testing laboratory meeting the roofing assembly system testing requirements of Factory Mutual, incorporate adhesion, impact and abrasion resistance, flexibility and excellent weather resistance. The

system shall have a minimum of 5 years successful performance in a high temperature and high humidity environment similar to Guam.

b. Reinforcing Fabric: Non-woven stitch bonded, heat set fabric.
c. Base Coat: U.V. resistant single component elastomeric coating used in conjunction with reinforcing fabric.
d. Top Coat: U.V. resistant single component coating used as a finish coat.
a. Glass Fiber: Amorphous glass fiber, approximately 2.7 g/cm3 for use with acrylic bonding agent, cement, and water for a slurry to create cants at junctures of horizontal and vertical surfaces.

B301003 1.2 ROOF INSULATION

This paragraph covers the requirements for insulation materials applied underneath the roof structure on the interior.

B301003 1.2.1 Insulation Types

Roof insulation shall have an R-value determined per ASHRAE Standard 90.1 (latest edition). System is a sprayable closed cell, rigid polyurethane foam system designed to insulate ceilings. The sprayed product results in a seamless, monolithic, and durable insulation system.

B301004 FLASHINGS & TRIM

B301004 1.1 FLASHING AND SHEET METAL

This paragraph covers the requirements for flashing and sheet metal work including scuppers, splash pans, and sheet metal roofing. Flashing and sheet metal shall be provided in accordance with roof manufacturer's printed installation instructions and in compliance with NRCA and SMACNA recommendations.

B301004 1.1.1 Materials

Furnish sheet metal items in minimum 8 to 10 foot (2.44 to 3.05 meter) lengths. Sheet metal items include the following: gutters, including hangers; downspouts; counter-flashings; gravel stops and fascias; cap, valley, stepped, base and eave flashings and related accessories.

a. Stainless Steel - ASTM A 167, Type 302 or 304, 2D finish, fully annealed, dead-soft temper.
e. Asphalt Primer - ASTM D 41
f. Fasteners - Fasteners shall be of the same or compatible metal with the item being fastened. Stainless steel fasteners shall be used to fasten dissimilar materials.

B301004 1.1.2 Field Quality Control

Fabrication and installation of sheet metal items shall be as follows:

a. Install work with watertight and hairline joints, without waves, warps, buckles, fastening stresses, or distortion, allowing for expansion and contraction.
b. Make surfaces to receive sheet metal plumb and true, clean, even, smooth, dry and free of defects and projections that

could affect the application.

c. Provide sheet metal flashing in angles formed where roof decks abut walls, curbs, ventilators, pipes, or other vertical surfaces and wherever indicated and necessary to make the work watertight.
d. Provide prefabricated inside and outside corners at all sheet metal intersection pieces. Minimum leg length shall be 12 inches (300 mm), maximum length shall be 18 inches (450 mm).
e. Sheet metal shall be fabricated to conform to the contours of surfaces to which applied.
f. All sheet metal cap flashings shall have waterproof membrane underlayment installed behind or below the metal components.
g. Provide conforming sheet metal closures at all flashing termination conditions.
h. Provide fastenings and accessories as required to provide a securely attached, watertight construction. Cleats shall be a minimum of one gage heavier than the component to be attached.
i. Where sheet metal components are to be embedded in the roofing system, prime both sides of all metal flanges prior to installation.

B301005 GUTTERS AND DOWNSPOUTS

Provide gutters and downspouts compatible with roofing material and finish. Concealed (interior) gutters and downspouts are prohibited. The primary and secondary drainage systems shall be sized per applicable Plumbing and Building Codes. Finish shall be baked-on factory applied color coating of Polyvinylidene fluoride (PVF2) or other equivalent fluorocarbon coating with a minimum thickness of 0.8 to 1.3 mils.

B301006 ROOF OPENINGS AND SUPPORTS

B301006 1.1 GENERAL REQUIREMENTS

Provide flashings for roof openings and supports as recommended by the NRCA and as specified below:

Assure all penetration flashings extend minimum 8 inches (200 mm) above the finished roof surface. Use round shapes to construct equipment supports. Equipment supports should be raised on a continuous curb a minimum of 14 inches (350 mm), but not less than as required by the NRCA.

B301006 1.2 ROOF HATCHES

Construct using NRCA approved techniques and details. Provide roof hatch where required by OSHA, or as access to roof when roof mounted equipment is used or other routine roof maintenance is required.

B301006 1.2.1 Construction

Provide insulated roof hatches of 14 gage galvanized steel with 22 gage galvanized steel liner or 18 gage aluminum liner, and have integral curb, flange and flashings for securing to roof deck. Hinge shall be heavy-duty zinc plated steel with non-removable pins. Latching mechanism shall be zinc-coated steel slam latch with inside and outside levers. Springs shall be greased compression springs in telescopic tubes. Provide interior locking of roof hatch. Provide a safety rail or ladder extension. Size roof hatch to allow access of routine maintenance equipment, but not less than 2'-6" x 3'-0" (750 mm x 900 mm). Hatch and access ladders shall conform to OSHA and other applicable safety standards.

B301090 OTHER ROOFING

B301090 1.1 LIGHTNING PROTECTION

Lightning protection component penetrations and attachments shall be sealed and flashed and anchored in a permanent manner and in a manner to avoid the degradation of the watertight integrity of the roof system. Do not cut or otherwise disturb the roof membrane. Mastic seals in the plane of the roof are unacceptable. Anchor plates set in mastic shall be set on roof surface cleaned of aggregate and loose material prior to mastic application.

-- End of Section --

FORMS

ROOFING SYSTEM COMPONENTS

1. Contract Number: _____
2. Building Number and Location: _____
3. NAVFAC Specification Number: _____
4. Deck Type: _____
5. Slope of Deck: _____
6. Insulation Type and Thickness:_____
7. Insulation Manufacturer: _____
8. Vapor Retarder (_____) Yes (_____) No
9. Vapor Retarder Type: _____
10. Roofing Description: _____
    Manufacturer (Name, address, and phone no.): _____
    _____
    Type: _____
    Method of attachment: _____
11. Statement of Compliance or Exception: _____
    _____
    _____
12. Date Roof Completed: _____
13. Warranty Period: _____
14. Roofing Contractor (Name and Address):
    _____
    _____
    _____
15. Prime Contractor (Name and Address):
    _____
    _____
    _____

Contractor's Signature _____ Date: _____
Inspector's Signature _____ Date: _____

Form page 1

CONTRACTOR'S FIVE (5) YEAR NO PENAL SUM WARRANTY FOR STRUCTURAL STANDING SEAM METAL ROOF (SSSMR) SYSTEM

FACILITY DESCRIPTION_____

BUILDING NUMBER:_____

CONTRACT NUMBER:_____

CONTRACTOR

CONTRACTOR:_____

ADDRESS:_____

POINT OF CONTACT:_____

TELEPHONE NUMBER:_____

OWNER

OWNER:_____

ADDRESS:_____

POINT OF CONTACT:_____

TELEPHONE NUMBER:_____

CONSTRUCTION AGENT

CONSTRUCTION AGENT:_____

ADDRESS:_____

POINT OF CONTACT:_____

TELEPHONE NUMBER:_____

Warranty page 1

CONTRACTOR'S FIVE (5) YEAR NO PENAL SUM WARRANTY FOR STRUCTURAL STANDING SEAM METAL ROOF (SSSMR) SYSTEM (continued)

THE SSSMR SYSTEM INSTALLED ON THE ABOVE NAMED BUILDING IS WARRANTED BY _____ FOR A PERIOD OF FIVE (5) YEARS AGAINST WORKMANSHIP AND MATERIAL DEFICIENCES, WIND DAMAGE, STRUCTURAL FAILURE, AND LEAKAGE. THE SSSMR SYSTEM COVERED UNDER THIS WARRANTY SHALL INCLUDE, BUT SHALL NOT BE LIMITED TO, THE FOLLOWING: THE ENTIRE ROOFING SYSTEM, MANUFACTURER SUPPLIED FRAMING AND STRUCTURAL MEMBERS, METAL ROOF PANELS, FASTENERS, CONNECTORS, ROOF SECUREMENT COMPONENTS, AND ASSEMBLIES TESTED AND APPROVED IN ACCORDANCE WITH ASTM E 1592. IN ADDITION, THE SYSTEM PANEL FINISHES, SLIP SHEET, INSULATION, VAPOR RETARDER, ALL ACCESSORIES, COMPONENTS, AND TRIM AND ALL CONNECTIONS ARE INCLUDED. THIS INCLUDES ROOF PENETRATION ITEMS SUCH AS VENTS, CURBS, SKYLIGHTS; INTERIOR OR EXTERIOR GUTTERS AND DOWNSPOUTS; EAVES, RIDGE, HIP, VALLEY, RAKE, GABLE, WALL, OR OTHER ROOF SYSTEM FLASHINGS INSTALLED AND ANY OTHER COMPONENTS SPECIFIED WITHIN THIS CONTRACT TO PROVIDE A WEATHERTIGHT ROOF SYSTEM; AND ITEMS SPECIFIED IN OTHER SECTIONS OF THE SPECIFICATIONS THAT ARE PART OF THE SSSMR SYSTEM.

ALL MATERIAL DEFICIENCIES, WIND DAMAGE, STRUCTURAL FAILURE, AND LEAKAGE ASSOCIATED WITH THE SSSMR SYSTEM COVERED UNDER THIS WARRANTY SHALL BE REPAIRED AS APPROVED BY THE CONTRACTING OFFICER. THIS WARRANTY SHALL COVER THE ENTIRE COST OF REPAIR OR REPLACEMENT, INCLUDING ALL MATERIAL, LABOR, AND RELATED MARKUPS. THE ABOVE REFERENCED WARRANTY COMMENCED ON THE DATE OF FINAL ACCEPTANCE ON _____ AND WILL REMAIN IN EFFECT FOR STATED DURATION FROM THIS DATE.

SIGNED, DATED, AND NOTARIZED (BY COMPANY PRESIDENT)

_____

(Company President) (Date)

Warranty page 2

CONTRACTOR'S FIVE (5) YEAR NO PENAL SUM WARRANTY FOR STRUCTURAL STANDING SEAM METAL ROOF (SSSMR) SYSTEM (continued)

THE CONTRACTOR SHALL SUPPLEMENT THIS WARRANTY WITH WRITTEN WARRANTIES FROM THE MANUFACTURER AND INSTALLER OF THE SSSMR SYSTEM, WHICH SHALL BE SUBMITTED ALONG WITH THE CONTRACTOR'S WARRANTY. HOWEVER, THE CONTRACTOR WILL BE ULTIMATELY RESPONSIBLE FOR THIS WARRANTY AS OUTLINED IN THE SPECIFICATIONS AND AS INDICATED IN THIS WARRANTY EXAMPLE.

EXCLUSIONS FROM COVERAGE

1. NATURAL DISASTERS, ACTS OF GOD (LIGHTNING, FIRE, EXPLOSIONS, SUSTAINED WIND FORCES IN EXCESS OF THE DESIGN CRITERIA, EARTHQUAKES, AND HAIL).

2. ACTS OF NEGLIGENCE OR ABUSE OR MISUSE BY GOVERNMENT OR OTHER PERSONNEL, INCLUDING ACCIDENTS, VANDALISM, CIVIL DISOBEDIENCE, WAR, OR DAMAGE CAUSED BY FALLING OBJECTS.

3. DAMAGE BY STRUCTURAL FAILURE, SETTLEMENT, MOVEMENT, DISTORTION, WARPAGE, OR DISPLACEMENT OF THE BUILDING STRUCTURE OR ALTERATIONS MADE TO THE BUILDING.

4. CORROSION CAUSED BY EXPOSURE TO CORROSIVE CHEMICALS, ASH OR FUMES GENERATED OR RELEASED INSIDE OR OUTSIDE THE BUILDING FROM CHEMICAL PLANTS, FOUNDRIES, PLATING WORKS, KILNS, FERTILIZER FACTORIES, PAPER PLANTS, AND THE LIKE.

5. FAILURE OF ANY PART OF THE SSSMR SYSTEM DUE TO ACTIONS BY THE OWNER TO INHIBIT FREE DRAINAGE OF WATER FROM THE ROOF AND GUTTERS AND DOWNSPOUTS OR ALLOW PONDING WATER TO COLLECT ON THE ROOF SURFACE. CONTRACTOR'S DESIGN SHALL INSURE FREE DRAINAGE FROM THE ROOF AND NOT ALLOW PONDING WATER.

6. THIS WARRANTY APPLIES TO THE SSSMR SYSTEM. IT DOES NOT INCLUDE ANY CONSEQUENTIAL DAMAGE TO THE BUILDING INTERIOR OR CONTENTS THAT IS COVERED BY THE WARRANTY OF CONSTRUCTION CLAUSE INCLUDED IN THIS CONTRACT.

7. THIS WARRANTY CANNOT BE TRANSFERRED TO ANOTHER OWNER WITHOUT WRITTEN CONSENT OF THE CONTRACTOR; AND THIS WARRANTY AND THE CONTRACT PROVISIONS WILL TAKE PRECEDENCE OVER ANY CONFLICTS WITH STATE STATUTES.

**

CONTRACTOR'S FIVE (5) YEAR NO PENAL SUM WARRANTY FOR STRUCTURAL STANDING SEAM METAL ROOF (SSSMR) SYSTEM (continued)

**REPORTS OF LEAKS AND SSSMR SYSTEM DEFICIENCIES SHALL BE RESPONDED TO WITHIN 48 HOURS OF RECEIPT OF NOTICE, BY TELEPHONE OR IN WRITING, FROM EITHER THE OWNER OR CONTRACTING OFFICER. EMERGENCY REPAIRS TO PREVENT FURTHER ROOF LEAKS SHALL BE INITIATED IMMEDIATELY; A WRITTEN PLAN SHALL BE SUBMITTED FOR APPROVAL TO REPAIR OR REPLACE THIS SSSMR SYSTEM WITHIN SEVEN (7) CALENDAR DAYS. ACTUAL WORK FOR PERMANENT REPAIRS OR REPLACEMENT SHALL BE STARTED WITHIN 30 DAYS AFTER RECEIPT OF NOTICE, AND COMPLETED WITHIN A REASONABLE TIME FRAME. IF THE CONTRACTOR FAILS TO ADEQUATELY RESPOND TO THE WARRANTY PROVISIONS, AS STATED IN THE CONTRACT AND AS CONTAINED HEREIN, THE CONTRACTING OFFICER MAY HAVE THE SSSMR SYSTEM REPAIRED OR REPLACED BY OTHERS AND CHARGE THE COST TO THE CONTRACTOR.

IN THE EVENT THE CONTRACTOR DISPUTES THE EXISTENCE OF A WARRANTABLE DEFECT, THE CONTRACTOR MAY CHALLENGE THE OWNER'S DEMAND FOR REPAIRS OR REPLACEMENT DIRECTED BY THE OWNER OR CONTRACTING OFFICER EITHER BY REQUESTING A CONTRACTING OFFICER'S DECISION UNDER THE CONTRACT DISPUTES ACT, OR BY REQUESTING THAT AN ARBITRATOR RESOLVE THE ISSUE. THE REQUEST FOR AN ARBITRATOR MUST BE MADE WITHIN 48 HOURS OF BEING NOTIFIED OF THE DISPUTED DEFECTS. UPON BEING INVOKED, THE PARTIES SHALL, WITHIN TEN (10) DAYS, JOINTLY REQUEST A LIST OF FIVE (5) ARBITRATORS FROM THE FEDERAL MEDIATION AND CONCILIATION SERVICE. THE PARTIES SHALL CONFER WITHIN TEN (10) DAYS AFTER RECEIPT OF THE LIST TO SEEK AGREEMENT ON AN ARBITRATOR. IF THE PARTIES CANNOT AGREE ON AN ARBITRATOR, THE CONTRACTING OFFICER AND THE PRESIDENT OF THE CONTRACTOR'S COMPANY WILL STRIKE ONE (1) NAME FROM THE LIST ALTERNATIVELY UNTIL ONE (1) NAME REMAINS. THE REMAINING PERSON SHALL BE THE DULY SELECTED ARBITRATOR. THE COSTS OF THE ARBITRATION, INCLUDING THE ARBITRATOR'S FEE AND EXPENSES, COURT REPORTER, COURTROOM OR SITE SELECTED, ETC., SHALL BE BORNE EQUALLY BETWEEN THE PARTIES. EITHER PARTY DESIRING A COPY OF THE TRANSCRIPT SHALL PAY FOR THE TRANSCRIPT. A HEARING WILL BE HELD AS SOON AS THE PARTIES CAN MUTUALLY AGREE. A WRITTEN ARBITRATOR'S DECISION WILL BE REQUESTED NOT LATER THAN 30 DAYS FOLLOWING THE HEARING. THE DECISION OF THE ARBITRATOR WILL NOT BE BINDING; HOWEVER, IT WILL BE ADMISSIBLE IN ANY SUBSEQUENT APPEAL UNDER THE CONTRACT DISPUTES ACT.

A FRAMED COPY OF THIS WARRANTY SHALL BE POSTED IN THE MECHANICAL ROOM OR OTHER APPROVED LOCATION DURING THE ENTIRE WARRANTY PERIOD.

SECTION C10

INTERIOR CONSTRUCTION
11/10

C10 GENERAL

RFP Part 3 including the Engineering System Requirements (ESR) provide project specific requirements. The RFP Part 4 Performance Technical Sections (PTS) provide generalized technical requirements that apply to multiple facility types and include more requirements than are applicable to this project. Therefore RFP Part 4 requirements that correspond and further define the RFP Part 3 requirements are specific to this project, other RFP Part 4 requirements are not required.

C10 1.1 DESIGN GUIDANCE

Provide the design and installation in accordance with the following references. This Performance Technical Specification (PTS) adds clarification to the fundamental requirements contained in the following Government Standards. The general requirements of this PTS section are located in PTS Section Z10, *General Performance Technical Specification*.

Industry standards, codes, and Government standards that are referenced in the section text that are not found in the Unified Master Reference List (UMRL) in the Construction Criteria Base (CCB) at the Whole Building Design Guide Website , are listed below for basic designation identification. Comply with the required and advisory portions of the current edition of the standard at the time of contract award.

C10 1.1.1 Industry Standards and Codes

Sealant, Waterproofing & Restoration Institute

C10 1.1.2 Government Standards

UNIFIED FACILITIES CRITERIA (UFC)

UFC 1-200-01	General Building Requirements(A reference in this PTS section to UFC 1-200-01 requires compliance with the Tri-Service Core UFCs that are listed in UFGS Section 01 33 10.05 20, which includes the following significant UFC(s):UFC 3-100-10N, Architecture UFC 3-120-10, Interior Design)

C10 1.2 PERFORMANCE VERIFICATION AND ACCEPTANCE TESTING

Verification of satisfactory interior construction assemblies' performance shall be via Performance Verification Testing, as detailed in this section of the RFP. Provide special tests and special inspections in accordance with UFGS Section 01 45 00.05 20, *Design and Construction Quality Control*. The Contractor shall pay the cost of all testing.

C10 1.2.1 Slump and Compressive Strength Tests for Grout

Slump between 8 and 11 inches (200 and 275 mm). Provide minimum grout strength of 2000 PSI in 28 days, as tested per ASTM C 1019.

C10 1.2.2 Door Closure Field Test for Demountable Partitions, Retractable Partitions, Operable Panels, and Accordion Partitions

Perform a flashlight test of all joints in partitions and partition to wall, floor, and ceiling. No light from a flashlight shall be visible from the opposite side of the partition. Adjust partition at locations where light is visible, and re-test.

C10 1.3 DESIGN SUBMITTALS

Design submittals shall be in accordance with Z10, *General Performance Technical Specifications*, UFGS section 01 33 10.05 20, *Design Submittal Procedures*, UFC 1-300-09N, *Design Procedures*, UFC 3-100-10N, *Architecture*, and UFC 3-301-01, *Structural Engineering*.

C10 1.4 CONSTRUCTION SUBMITTALS

Submit construction submittals in accordance with PTS Section Z10, *General Performance Technical Specifications*. In addition to the Z10 requirements, the Designer of Record (DOR) shall approve the following submittals as a minimum:

Doors, door hardware, windows and glazing, cabinets and countertops, casework, and fireproofing/firestopping.

All structural elements necessary for construction

C1010 PARTITIONS

For general use, metal studs and standard grade GWB, CMU with prime filler coat, or CMU/cast-in-place concrete with GWB or skim coat plaster are acceptable unless shown otherwise in the Project Program. Reinforce points where doorknobs can strike a wall and anchorage points for wall mounted equipment.

Provide control joints and installation techniques as recommended by the manufacturer. See PTS Section C30, *Interior Finishes*, for additional information.

Provide painted GWB with access panels at surfaces furred for HVAC, plumbing and other utility services and controls behind wall surfaces.

Acceptable systems where "IMPACT RESISTANCE" (areas subject to physical abuse or wear) is designated in the project program requirements for impact resistance systems include:

a. CMU/cast-in-place concrete with or without plaster or furred impact resistant GWB or surface applied impact resistant textured acrylic architectural coating system.
b. GWB/metal stud system reinforced for impact resistance with a double layer of gypsum board using at least one layer of impact resistant gypsum board to resist denting and puncturing on the impact surface. If wall is subjected to impact on both sides, both sides of the stud require a double layer of gypsum board. Structural, mechanical, and acoustical design requirements effect the metal stud/gypsum support configuration.

C101001 FIXED PARTITIONS

Provide fixed partitions, except where demountable or retractable partitions are specifically required by the "Room Requirements", to include wood or metal studs, GWB, plaster, masonry and cast-in-place concrete walls. Sound-rated partition assemblies shall have a minimum Sound Transmission Coefficient (STC) as required by the project program. Construct sound-rated bulkheads above partition assemblies for continuity to the deck above.

C101001 1.1 CAST-IN-PLACE INTERIOR CONCRETE WALLS

Accomplish work in accordance with UFC 1-200-01, ACI 117 and 301/301M. Concrete Mix Design shall be suitable for the job conditions.

C101001 1.2 MASONRY PARTITIONS

Accomplish work in accordance with ACI 530.1/ASCE 6/TMS 602 and associated ASTM Standards for concrete masonry wall construction.

C101001 1.2.1 Testing

Masonry strength shall be determined in accordance with ACI 530.1. Where fire-rated assemblies are indicated, provide concrete masonry units that have been tested in conformance with ASTM E 119. Provide certificate of compliance to the Designer of Record (DOR) that the materials and assemblies meet the fire ratings indicated on the drawings.

C101001 1.2.2 Masonry Units Types

C101001 1.2.2.1 Concrete Masonry Units

Units of modular dimensions and air, water or steam cured. Surfaces of units to be plastered or stuccoed shall be sufficiently rough to provide bond and exposed surfaces of units shall be smooth and of uniform texture.

a. Hollow Load-Bearing Units: ASTM C 90, Type I or II, made of lightweight or normal weight aggregate.
b. Hollow Non-Load-Bearing Units: ASTM C 129, Type I or II, made with lightweight or normal weight aggregate.
c. Special Shapes: Provide special shapes as necessary to complete the work.

C101001 1.2.3 Masonry Partition Materials

a. Mortar - Provide ASTM C 270, Type N or S for non-shear-wall interior masonry. For Glass Block use Type S, White Portland cement.
b. Portland Cement - ASTM C 150, Type I, II, or III.
c. Masonry Cement - ASTM C 91, Type N, S, or M.
d. Sand - ASTM C144.
e. Grout - ASTM C 476, Fine aggregate for grouting cells / spaces 3" (75 mm) or less, or coarse aggregate for grouting cells / spaces greater than 3" (75 mm). Slump between 8 and 11 inches (200 and 275 mm). Provide minimum grout strength of 2000 PSI in 28 days, as tested per ASTM C 1019.

C101001 1.2.4 Masonry Accessories

a. Horizontal Joint Reinforcement - Fabricate from cold drawn steel wire, ASTM A 82. Wire shall be hot-dipped galvanized after fabrication in accordance with ASTM A 153/ A 153M, Class B-2, 1.5 ounces of zinc per square foot (42.52 g / 0.0929 sq. meter).
b. Anchors and Wall Ties - Provide of stainless steel, ASTM A 167, Type 304, or zinc-coated steel.
c. Reinforcing Bars - ASTM A 615 / A 615M.

C101001 1.3 COLD-FORMED METAL FRAMING

Cold-Formed Metal Framing shall be designed and constructed in accordance with the provisions of UFC 1-200-01 and the International Building Code.

C101001 1.3.1 Studs

Galvanized steel, ASTM A 653 / A 653M, SS Grade 50, G60

C101001 1.3.2 Framing Accessories

Fabricate steel-framing accessories of the same material and finish used for framing members, with minimum yield strength of 33,000 psi (230 Mpa). Accessories include, but are not limited to, the following: bracing, bridging, blocking, web stiffeners, end and foundation clips, gusset plates, stud kickers, knee braces, girts, joist hangers, reinforcing and backer plates.

Provide permanent metal-to-metal contact separation from stud to electrical conduits, plumbing pipes, and other internal wall system components, such as electrical wires.

C101001 1.4 METAL SUPPORT ASSEMBLIES

Provide steel materials for metal support systems with galvanized coating per ASTM A 653/ A 653M, G60; aluminum coating ASTM A 463/ A 463M, T1-25; or a 55% aluminum-zinc coating ASTM A 792.

C101001 1.4.1 Suspended and Furred Ceiling Systems, and Wall Furring

ASTM C 841(for lath); ASTM C 645 (for GWB).

C101001 1.4.2 Non-load-Bearing Wall Framing / Furring

ML/SFA MLF (for lath); ASTM C 645, but not thinner than 0.0179 inch (0.4547 mm) thickness. Provide 0.0329 inch (0.8357 mm) minimum thickness for supporting wall hung items such as cabinetwork, equipment and fixtures and for GWB.

C101005 INTERIOR WINDOWS

For fixed interior windows, assemblies include frames, glazing, caulking, and other associated work. For other window types, see PTS Section B20, *Exterior Enclosure*. Glazing for windows specified under this section is located in C101007, "Interior Glazing."

C101005 1.1 ALUMINUM WINDOWS

Each window unit shall be a complete factory assembled unit with or without glass installed. Fabrication of window units shall comply with AAMA 101.

a. Fixed Windows - Type F, LC25 for residential, or HC40 for non-residential (commercial).
b. Sliding Glass Pass Windows - Frames and glass channels shall be of heavy type 6063-TS aluminum extrusions. Provide 1/4-inch (6.35 mm) clear tempered glass.
c. Bullet-Resistant Pass Windows - Conform to UL classification (1 through 8) as required by the installation. Provide fixed, bullet-resistant glazing with pass tray for installations requiring high levels of security.

C101005 1.2 VISION PANELS

a. Wood Windows

Wood windows shall consist of complete units, including sash, glass, frame and hardware. Window units shall meet the Grade 40 requirements of AAMA 101. Wood members that will receive a transparent finish shall be in one piece, not finger-jointed.

b. Plastic Windows

Provide PVC windows, reinforcing members, welded corners, fasteners, hardware and anchors conforming to AAMA 101 or ASTM D 4099.

1) Windows shall be fixed or operable, as stated in the project program.

2) Material and Color - Window (PVC) color shall be a consistent color all the way through the material.

c. Hollow Metal Vision Panels – shall meet the requirements of hollow metal frames, paragraph C102001.

C101005 1.3 FINISHES

Finish exposed aluminum or steel window surfaces as follows:

a. Anodic Coating

Architectural Class I (0.7 mil or thicker), designation AA-M10-C22-A41, clear (natural) or A42, integral color or A44, electrolytically deposited color anodized.

b. Organic Coating

Provide a high-performance coating in accordance with AAMA 2605 with a total dry film thickness not less than 1.2 mils (0.03 mm).

C101007 INTERIOR GLAZING

ASTM C 1036, unless specified otherwise. Provide patterned glass where required to obscure view into bathrooms and dressing rooms.

Provide setting and sealing materials, stops and gaskets as recommended by the glass or acrylic sheet manufacturer.

Glazing thickness indicated in the following paragraphs is the minimum acceptable thickness. Provide thicker glazing if required by the code or the manufacturer for the given application.

C101007 1.1 GLASS

C101007 1.1.1 Clear Glass

Type I, class I (clear), quality q4 or q5 for patterned glass.

C101007 1.1.2 Wire Glass

Provide glazing of Type II, Class I, Form I, Quality q8 mesh stainless steel, diamond pattern, 1/4 inch (6.35 mm) thick. Glass shall comply with ASTM E 163.

C101007 1.1.3 Patterned Glass

Type II, Class 1 (translucent), Form 3 (patterned), quality q7 (decorative), Finish f2 (patterned two sides), 1/8 inch (3.2 mm).

C101007 1.1.4 Laminated Glass

Fabricate from two pieces of Type I, Class 1, quality q3 glass laminated together with a clear, 0.030 inch (0.75 mm) thick polyvinyl butyral interlayer. Total thickness shall be nominally 1/4 inch (6.35 mm).

C101007 1.1.5 Bullet-Resistant Glass

Provide bullet resistant composite glazing panel listed by UL ABPMED with a power rating corresponding to the installation prescribed, and in accordance with UL 752.

C101007 1.1.6 Tempered Glass

ASTM C 1048, Kind FT (fully tempered), Condition A (uncoated), Type I, Class 1 (clear), quality q3.

C101008 INTERIOR JOINT SEALANT

Sealant joint design and application shall be in accordance with the general requirements of *Sealants: A Professionals' Guide* from the Sealant, Waterproofing & Restoration Institute. Refer to manufacturers' recommendations for chemical resistance.

C101008 1.1 JOINT SEALANT TYPES FOR INTERIOR WORK

Sealants shall be paintable, and shall match the color of adjacent surfaces.Sealants must meet Andersen Air Force Base Architectural Compatibility and Base Design Standard requirements.

C1020 INTERIOR DOORS

Door hardware shall be as specified in "Interior Door Hardware" in this section.

C102001 STANDARD INTERIOR DOORS

This paragraph covers all standard interior wood or hollow metal doors with frames, hardware, locks, and finish.

C102001 1.1 ALUMINUM DOORS

Hardware preparation shall be in accordance with ANSI A250.6. Doors shall be hung in accordance with ANSI A115.16.

C102001 1.1.1 Aluminum Doors

Material Standard: ASTM B221; 6063-T5 or 6063-T6 alloy and temper.

Door face sheets shall be .040" #10 pattern fluted or .063" smooth aluminum sheet. For interior and exterior, 1/8"tempered hardboard backer to be used with a face sheet for impact resistance.

Core of flush doors shall be foamed-in-place Class 1 urethane foam.

Mechanical joints of stiles and rails shall have extruded aluminum gussets with concealed 5/16" tie-rods.

Perimeter caps shall be extruded aluminum with the bottom cap having dual integral grooves to receive nylon brush door sweep.

Frame portions shall be complete with head and jamb weather stripping, threshold, and door sweep.

Tolerances: Reference to tolerances for wall thickness and other cross-sectional dimensions of entrance members are nominal and in compliance with Aluminum Standards and Data. Fasteners, where exposed, shall be aluminum, stainless steel or zinc plated steel in accordance with ASTM A164. Perimeter stainless steel.

Door selection shall be specified in the project program according to the following:

a. Standard Duty Doors - Level 1, physical performance Level C, Model [1] [2]
b. Heavy Duty Doors - physical performance Level B, Model [1] [2]
c. Extra Heavy Duty Doors – ANSI A250.8, Level 3, physical performance Level A, Model [1] [2] [3]
d. Maximum Duty Doors – ANSI A250.8, Level 4, physical performance Level A, Model [1] [2]

C202001 1.1.2 Anchors

Anchor all frames with a minimum of three jamb anchors and base steel anchors per frame, zinc-coated or painted with rust-inhibitive paint, not lighter than 18 gage. Mortar infill frames in masonry walls, and infill with gypsum board compound at each jamb anchor in metal frame walls. Only use surface exposed bolted anchors in concrete walls.

C202001 1.1.3 Finishes

Finish of all exposed areas of aluminum windows and components shall be done in accordance with the appropriate AAMA Voluntary Guide Specification shown

Designation	Description	Standard	Color
AAM12C21A44	Electrolytically Deposited - Class I	AAMA 611	Dark Bronze

Organic Paint	AAMA 2605	As selected by Architect from manufacturer’s custom colors - suitable for INTERIOR or EXTERIOR

C102003 FIRE DOORS

This paragraph covers all interior fire doors, including all necessary frames, hardware, closing devices, and alarms associated with the door.

C102003 1.1 FIRE AND SMOKE DOORS AND FRAMES

Provide in conformance with NFPA 80 an NFPA 105. Fire doors and frames shall bear the label of UL, FM or WHI attesting to the rating required. Door and frame assemblies shall be tested for conformance per NFPA 252 or UL 10C (for positive pressure). Wood fire doors shall also comply with ASTM E 152.

Provide stainless steel astragals complying with NFPA 80 for fire-rated assemblies and NFPA 105 for smoke control assemblies.

C102004 SLIDING AND FOLDING DOORS

Provide paneled or louvered closet doors of premium or custom grade, conforming to WDMA I.S.6A-01, heavy duty. Doors shall be sliding or bi-folding, as required by the program.

C102005 INTERIOR OVERHEAD DOORS

See paragraph titled "OVERHEAD AND ROLL-UP DOORS" within PTS Section B20.

C102006 INTERIOR GATES

Any special type gate installed in the interior of a facility, including frames, hardware, hoisting devices, finish, and other associated work.

C102007 INTERIOR DOOR HARDWARE

C102007 1.1 DOOR HARDWARE

Provide the services of an Architectural Hardware Consultant (AHC), Certified Door Consultant (CDC), or an Electrified Hardware Consultant (EHC) to assist the Designer of Record in preparation of the door hardware schedule and product selection. The hardware consultant shall sign and seal the door hardware construction submittal. Provide, as far as feasible, locks, hinges, pivots, and closers from one lock, hinge, pivot, or closer manufacturer's make. All door hardware shall be clearly and permanently marked by the manufacturer, on a location to be visible after installation. Modify hardware as necessary to provide features indicated or specified. For necessary hardware items not indicated in these specification sections, provide ANSI/BHMA grade 1 rated hardware.

C102007 1.1.1 Hardware for Fire Doors

All hardware provided shall meet the requirements of NFPA 80 for Fire Doors and NFPA 101 for exit doors. Hardware shall bear the label of Underwriter's Laboratories, Inc., and be listed in UL BMD or labeled and listed by another testing laboratory acceptable to the contracting officer. Comply with NFPA 105 for smoke control assemblies.

C102007 1.1.2 Hinges

BHMA A156.1, Grade 1, 4-1/2 x 4-1/2 inches (108 x 108 mm) with non-removable pin or anti-friction bearing hinges.

C102007 1.1.3 Locks and Latches

For non-residential buildings use Series 1000, Operational Grade 1, Security Grade 2 for stairways, building entrances, corridors, assembly spaces, and other high use interior doors. Use Series 4000, Grade 1 for non-residential locations not using Series 1000 hardware. For residential buildings use Series 4000, Grade 2 for interior doors.

a. Mortise Locks and Latches - BHMA A 156.13, Series 1000, Operation Grade 1, Security Grade 2.
b. Bored Locks and Latches - BHMA A 156.2, Series 4000, Grade 1, or Grade 2.

C102007 1.1.4 Combination Locks

BHMA A 156.2. Heavy-duty, mechanical combination lockset with 5 pushbuttons, standard-sized knob or lever, 3/4-inch (19 mm) deadlocking latch, 2-3/4 inch (70 mm) back-set. Provide deadbolt key override option. Safelock, Simplex, and Venn are acceptable manufacturers. Provide a hardware grade equivalent to Grade 1, series 4000. Provide a 5-year parts and labor warranty.

A door into a sensitive area shall be fitted with a FF-L-2740A X-09 Heavy-duty, combination Electromechanical Deadbolt lock for pedestrian doors, with a drill resistant dial ring mounting plate, 2-3/4 inch (70 mm) back-set, with Automatic Lock Reset, High-Security combination scramble, and resistant to all forms of external manipulation and environmental attack. KABA-MAS is the acceptable manufacturer. Three Modes of Operation: 1) The Single Combination Mode allows access by dialing a six-digit combination. 2) The Dual Combination Mode allows access only when two separate codes are entered within 10 seconds of one another. 3) The Supervisory/Subordinate Mode allows access by a subordinate only after a supervisor code has been entered. Audit Feature: Lock shall have a full compliment of auditing features, including non-resettable openings log, and unsuccessful attempts log (audits after 3 unsuccessful attempts) that resets once the proper access code is entered. Lock shall generate its own electrical energy with each turn of the dial, with no batteries or wires required. Lock shall be designed to fit industry standard door mounting pattern.

C102007 1.1.5 Card Key System

Provide card key type access units for specialized entries as required by the program. Provide lithium battery powered, magnetic stripe keycard locksets that are ANSI/BHMA A156.13, Series 1000, Grade 1, mortise or ANSI/BHMA A156.2, Series 4000, Grade 1, cylindrical locks, tamper resistant, UL listed with 1 inch (25 mm) throw deadbolt, 3/4-inch (19 mm) throw latch bolt, auxiliary dead-locking latch, and 2-3/4 inch (68.75 mm) backset. The latch bolt and the dead bolt shall be operated simultaneously by rotating inside lever. Locks with mechanical override lock cylinders are not acceptable. Locks shall be operated only by a correctly encoded keycard. Use of a newly issued keycard automatically re-keys the lock and voids the previous keycard.

The lock shall re-lock immediately after outside lever is turned and latch retracted. Locks shall have memory that is capable of recording up to 140 entries into each room, identification of the keycard used to access the room, the date and time of entry. Entry information of the lock shall be retrievable by a data key that can be inserted into the lock and then taken to the front desk printer to display information. Other components that are required for this system at the front desk are a personal or laptop computer, printer and encoder to program each key.

For exit device locks with card key access, provide mortise type, narrow stile exit devices with 24 volt DC, solenoid option for card key exterior access at aluminum storefront doors. Provide mortise type exit devices with 24 volt DC, solenoid option with alarm and remote exterior access for card key access at insulated hollow metal doors. The alarmed exit device shall sound when exiting only.

System shall be capable of accepting a minimum of 12 keycard access levels, security auditing and computer interfacing with the existing or new management system. Provide a single point of contact customer service representative accessible by telephone with a 10-digit telephone number without additional dialing hierarchies except that a maximum 4-digit extension is permissible. On-site service shall be provided within 3 hours from request within the first 12 months of occupancy. Provide a 5-year parts and labor warranty.

C102007 1.1.6 Exit Devices

BHMA A 156.3, Grade 1. Touch bars shall be provided in lieu of conventional crossbars and arms. Use manufacturer's integral touch bars in aluminum storefront doors.

C102007 1.1.7 Cylinders and Cores

Provide cylinders and cores for new locks, including locks provided under other sections of this specification. Cylinders and cores shall have seven pin tumblers. Cylinders shall be products of one manufacturer, and cores shall be the products of one manufacturer. Rim cylinders, mortise cylinders, and knobs of bored locksets shall have interchangeable cores, which are removable by special control keys. Stamp each interchangeable core with a key control symbol in a concealed place on the core.

C102007 1.1.8 Keying System

Provide a master key system for the facility unless more than one tenant/tenant command shall reside in a facility. Provide a grand master keying system, or great, grand master keying system if multiple tenants or multiple buildings are required. Provide an extension of the existing keying system for existing facility additions. Name the manufacturer of the existing locks, and indicate if they have interchangeable cores. Provide construction interchangeable cores when subcontractors require keys during construction.

The Contractor shall coordinate a keying system meeting. The Contractor's Project Manager, Superintendent, Hardware Subcontractor, Electrical Subcontractor (if keying hardware is electric), Designer of Record, Contracting Officer, Public Works Base Hardware Specialist, and the Using Activity shall attend this meeting to establish the keying system for the project. This

meeting is intended to identify base limitations, the necessary security, and access control within the facility. The meeting shall produce a marked up copy of the floor plan indicating the doors to receive locks and the doors to be keyed together, and any master keying or grand master keying

C102007 1.1.9 Keys

Furnish one file key, one duplicate key and one working key for each key exchange and for each master and grand master keying system.

C102007 1.1.10 Key Cabinet and Control System

BHMA A 156.5 Provide key cabinet with 25% more key hooks than required for interior and exterior doors.

C102007 1.1.11 Lock Trim

Cast, forged or heavy wrought construction and commercial plain in design.

a. Knobs and Roses - Knobs and roses shall meet test requirements of BHMA A 156.2 and BHMA A 156.13.
b. Lever Handles - Provide lever handles in lieu of knobs, as required by DoD ABAAS. All lever handles shall have the freewheeling feature.

C102007 1.1.12 Door Bolts

BHMA A 156.16. Provide automatic latching flush bolts for double doors with both door leafs active, BHMA A 156.3, Type 25.

C102007 1.1.13 Closers

BHMA A 156.4, Series C02000, Grade 1, with PT 4C, 1-1/2 inch piston, heavy duty forged arm, with full size cover.

C102007 1.1.14 Overhead Holders

BHMA A 156.8, Grade 1.

C102007 1.1.15 Closer Holder-Release Devices

BHMA A 156.15, Grade 1.

C102007 1.1.16 Door Protection Plates

Provide armor, mop, and kick plates conforming to BHMA A 156.6. Provide door kick plates on all doors with closers and doors leading to corridors or circulation spaces. Provide armor plates on all doors that receive cart traffic. Provide mop plates on all doors in rooms that have a mop-able floor finish.

C102007 1.1.17 Door Stops and Silencers

BHMA A 156.16, Type L03011, three per single door and four per double door.

C102007 1.1.18 Thresholds

BHMA A 156.21.

C102007 1.1.19 Door Gasketing

BHMA A 156.22. Use light-proof gasketing for room functions that require darkness and integral sound-proof gasketing on acoustically rated doors.

C102007 1.1.20 Finishes

Provide one of the following hardware finish systems, matching the exterior hardware finish system.

a. BHMA A156.18. Hardware shall have BHMA 630 finish (satin stainless steel), unless specified otherwise. Provide items not manufactured in stainless steel in BHMA 626 finish (satin chromium plated) over brass or bronze, except surface door closers which shall have aluminum paint finish, and except steel hinges which shall have BHMA 652 finish (satin chromium plated). Hinges for exterior doors shall be stainless steel with BHMA 630 finish or chromium plated brass or bronze with BHMA 626 finish. Exit devices may be provided in BHMA 626 finish in lieu of BHMA 630 finish except where BHMA 630 is specified under paragraph entitled "Hardware Sets". Exposed parts of concealed closers shall have finish to match lock and door trim. Hardware for aluminum doors shall be finished to match the doors.
b. BHMA A156.18. Hardware shall have BHMA 612 finish (satin bronze), unless specified otherwise. Surface door closers shall have bronze paint finish. Steel hinges shall have BHMA 639 finish (satin bronze plated). Exposed parts of concealed closers shall have finish to match lock and door trim. Hardware for aluminum doors shall be finished to match the doors. Hardware showing on interior of bathrooms, shower rooms, toilet rooms, washrooms, laundry rooms, and kitchens shall have BHMA 629 finish (bright stainless steel) or BHMA 625 finish (bright chromium plated).

C102090 OTHER INTERIOR SPECIALTY DOORS

C102090 1.1 ACCESS DOORS

Provide manufactured access doors and frames of 16-gage steel minimum with concealed pivots or a continuous piano hinge and flush stainless steel cam latch. Finish with manufacturer's standard primer coat finish and paint to match the wall or ceiling unless a stainless steel finish is required in the Project Program. Provide UL Rated access doors in fire rated assemblies. Access panels located in furred wall spaces shall have an inserted material to match adjacent wall surface. Size access doors large enough to allow convenient hand and tool access and operation of controls and equipment beyond the door. If maintenance of controls or equipment beyond the door requires removal, size access door to allow removal and reinstallation of new equipment through the access door. Provide access panels capable of receiving finish material inserts in visible wall locations of habitable spaces.

C102091 OTHER INTERIOR PERSONNEL DOORS

Interior personnel doors not described by the assembly categories listed above.

C1030 SPECIALTIES

C103001 COMPARTMENTS, CUBICLES AND TOILET PARTITIONS

This paragraph covers assemblies for individual compartments, cubicles, toilet partitions and urinal screens.

C103001 1.1 TOILET PARTITIONS

FS A-A-60003. Provide toilet compartments at multi-fixture toilet rooms of Type I, Style B-Ceiling Hung, C-Overhead Braced, or F-Overhead braced-alcove. Reinforce panels to receive partition-mounted accessories. Steel and Plastic toilet partitions shall have a recovered materials content of 20 to 30 percent.

C103001 1.2 URINAL SCREENS

FS A-A-60003. Type III, Style A, floor supported and wall hung or Style D, wall hung. Wall hung urinal screens shall be secured with continuous flanges to urinal screen and wall.

C103001 1.3 HARDWARE AND FITTINGS

Chrome-plated or stainless steel door latches and coat hooks. Provide one coat hook per compartment door. Latches and hinges for handicapped compartments shall comply with DoD ABAAS.

C103001 1.4 FINISHES

Finishes shall comply with FS A-A-60003. Use only one type of partition per building.

a. Metal toilet partitions and urinal screens shall be made of stainless steel.
b. Solid plastic partitions shall be fabricated of polymer resins (polyethylene) formed under high pressure forming a single component section one inch thick. Color shall extend throughout the panel thickness.
c. Phenolic core panels.
d. Laminated plastic partitions are acceptable in low or limited use applications (one or two toilet stalls per toilet room).

C103002 TOILET AND BATH ACCESSORIES

This paragraph covers toilet and bath accessories including, but not limited to, soap dispensers, paper holders, towel receptacles, grab bars, and bathroom mirrors.

C103002 1.1 TOILET AND BATH ACCESSORIES

C103002 1.1.1 Toilet Tissue Dispensers

Provide surface or recessed mounted dispensers fabricated of stainless steel. Provide one horizontally or vertically mounted double-roll dispenser per toilet compartment, unless otherwise indicated.

C103002 1.1.2 Paper Towel Dispensers

Provide one per pair of sinks in toilet rooms without electric

hand dryers, and one per room with electric hand dryers, unless otherwise indicated. Provide surface or recessed mounted towel dispenser constructed of a minimum 0.7mm 0.03 inch Type 304 stainless steel.

C103002 1.1.3 Combination Paper Towel Dispenser / Waste Receptacle

Provide a recessed or semi-recessed type with a capacity of 400 sheets of C-fold, single-fold, or quarter-fold towel and be constructed of 22-gage stainless steel. Provide one per pair of sinks, unless otherwise indicated. Provide the towel compartment door with a tumbler key lock locking mechanism.

C103002 1.1.4 Sanitary Napkin Disposal Units

Units shall be toilet partition or wall mounted of not less than 22 gage stainless steel, with top and bottom hinged access doors. Provide one in each Woman's toilet stall, unless otherwise indicated. Each unit shall have leak-proof receptacle for disposable liners. Provide fifty disposable liners of the type standard with the manufacturer.

C103002 1.1.5 Medicine Cabinets

Provide units with plate or float glass mirrors on doors. Provide doors and frames of 16-gage steel with a continuous piano hinge and flush magnetic latch.

C103002 1.1.6 Towel Bars

Provide stainless steel towel bars with a minimum thickness of 0.015 inch (0.4 mm).

C103002 1.1.7 Grab Bars

Provide stainless steel grab bars per DoD ABAAS.

C103002 1.1.8 Robe Hooks

Provide stainless steel two-hook shape with integral wall flange, with a projection not less than 1-5/8 inches (41 mm).

C103002 1.1.9 Mirrors

Provide one manufactured framed electro-copper plated mirror per sink, or one full-size mirror for all sinks, unless otherwise indicated.

C103002 1.1.10 Soap Dispensers

Provide one soap dispenser per two sinks, with mechanical action dispensing valve. Do not mount soap dispenser on mirror. Surface mounted liquid type shall consist of a vertical Type 304 stainless steel tank with holding capacity of 1.2L (40 fluid ounces) with a corrosion-resistant all-purpose valve.

C103002 1.1.11 Electric Hand Dryer

Provide wall mount and electric hand dryer designed to operate at 110/125 volts, 60 cycles, single phase alternating current with a heating element core rating of a maximum 2100 watts. Provide dryer

housing of single piece construction and of chrome plated steel. Provide one unit per three sinks, unless otherwise indicated.

C103003 MARKER BOARDS AND TACK BOARDS

This paragraph covers all marker boards, tack boards and fastening devices.

C103003 1.1 MATERIALS

a. Porcelain Enamel - Marker board writing surface shall be composed of porcelain enamel fused to a nominal 28 gage thick steel sheet, laminated to a 1/4-inch (6.35 mm) thick core material with a steel or foil backing sheet.
b. Cork shall be a continuous resilient sheet made from soft, clean, granulated cork, relatively free from hardback and dust and bonded with a binder suitable for the intended purpose. The cork sheet shall have a tensile strength of not less than 40 PSI (275.8 kPa) when tested in accordance with ASTM F 152.
c. Tack-board Covers - Provide woven fabric or vinyl wall covering over cork tack surface.
d. Aluminum - Aluminum frame extrusions shall be alloy 6063-T5 or 6063-T6, conform to ASTM B 221, and be a minimum of 0.06 inches (1.5 mm) thick.
e. Hardwood - Exposed hardwood for frames, cabinets and cases shall be oak, walnut or mahogany, with a factory applied stain and lacquer finish.
f. Glass - Provide tempered glass in accordance with ANSI Z97.1 and in conformance with ASTM C 1048.

C103003 1.2 PRESENTATION BOARD

The presentation board shall be a laminate covered wall-hung cabinet with lockable doors. Doors are to be attached to the cabinet with continuous piano hinges, and have a catch or closure to keep doors closed when not in use. The interior of the cabinet shall contain a porcelain enamel marker board writing surface with chalk-tray, a flip chart that can be hung on an interior door panel, and fabric covered tack surface on the interior door panels.

a. Marker Board - Marker board shall be a factory assembled, one-piece unit, and have a 28 gauge nominal steel porcelain enamel writing surface and a chalk-tray with end closure. Frame shall be aluminum, powder-coated steel, oak, walnut or mahogany.
b. Tack Board - Tack boards shall consist of a minimum 1/4-inch (6.35 mm) thick natural cork laminated to a minimum 1/4-inch (6.35 mm) thick hardboard, shall have an oak or aluminum frame, and be vinyl or fabric covered. Covers shall have a Class 'A' flame spread rating of 0-50, and a smoke developed rating of 0-450 in accordance with ASTM E 84.

C103004 IDENTIFYING DEVICES

This paragraph covers all signs, plaques, and traffic markers.

C103004 1.1 ASSEMBLIES

The signage system assemblies shall consist of three primary elements; a structural rail (with coordinating rail joiners to increase sign height in the field), removable copy inserts, and interlocking end caps or frame, and trim.

C103004 1.1.1 Inserts

The signage rails shall be designed as to accept ABS plastic signage inserts.

C103004 1.1.1.1 Insert Fabrication

The insert is the signage member to which message signage copy in the form of letters, numbers, and symbols shall be applied, and shall be interchangeable with similar sized rails of any other sign of equal or greater width and height. The ends of the rail and insert assembly shall be enclosed by end caps of prefinished 6064T5 extruded aluminum. Inserts shall be fabricated from 0.090 minimum ultra-violet resistant thickness extruded ABS Acrylic sheet core with 20.003 polycarbonate non-glare clear cap bonded to the core during the extrusion texturing process.

C103004 1.1.2 End Caps

End caps shall be injection-molded ABS plastic with integral color. The end caps shall be interchangeable to either end of each sign type, and any other similar sign of equal height. The end caps shall be interlocking mechanically with the inserts, and rail, requiring no tools for assembly. End caps shall utilize straight corners (instead of radius corners). Spring clips shall be steel. Plastic spring clips are not acceptable.

C103004 1.1.3 Trim

Optional accessory top and bottom trim frames of prefinished (color as indicated 6063T5 extruded aluminum shall be provided to the signage types indicated.

C103004 1.1.4 Mounting

Mounting of the modular signage system shall include surface mounting with screw-on applications for interior and exterior walls and on selected doors as indicated, at the locations indicated, and other mounting devices as indicated.

C103004 1.1.5 Graphics Application

a. Tactile Letters and Symbols

Chemically weld tactile letters and symbols to front surface of signage inserts where indicated and where required by DoD ABAAS. Tactile letters and symbols shall be sized as indicated.

b. Braille

Grade II Braille. Provide Grad II Braille inlaid strip as indicated to match sign color.

C103004 1.2 ALUMINUM ALLOY PRODUCTS

Provide ASTM B 209 for aluminum sheet or plate, ASTM B 221 for aluminum extrusions and ASTM B 26/B 26M or ASTM B 108 for aluminum castings. Provide aluminum extrusions at least 1/8-inch (3.2 mm) thick and aluminum plate or sheet at least 16 gage thick. Provide aluminum castings of solid aluminum cast certified by AA 46 alloy designation B443.0. Where anodic coatings are specified, alloy shall conform to

Aluminum Association's alloy designation 514.0 or A514.0.

C103004 1.2.1 Aluminum Finishes

Provide exposed aluminum finishes with either mill finish, factory finished with anodic coating or organic coating. Anodized finishes shall conform to AA 45, Architectural Class I or II, with a coating thickness 0.7 mil or thicker. Organic coatings shall be a baked enamel finish with a dry film thickness not less than 1.2 mils, conforming to AAMA 605.2.

C103007 FIRE EXTINGUISHER CABINETS

Cabinet shall be constructed of 16 gauge cold-rolled steel door panel / front, and a 22 gauge cold-rolled steel tub. Cabinet shall be fire-rated if located in a fire rated wall assembly, and have a full-length piano hinge, and baked enamel finish. Provide a stainless steel cabinet door if cabinet is exposed to the environment. Size and locate fire extinguisher cabinets to encase extinguisher as required by NFPA 10 & 101.

C103008 COUNTERS

C103008 1.1 LAMINATE COVERED COUNTER TOPS

Fabricate with lumber and a core of exterior grade plywood (A-C Grade) or particleboard (ANSI A208.1, Grade 1-M-2 or better), glued and screwed to form an integral unit. Bond laminated plastic under pressure to exposed surfaces using manufacturer's recommended glue.

a. Countertops shall be constructed to meet "Custom" quality grade as defined in AWI Quality Standards.
b. Finish shall meet NEMA LD 3, Grade PF 42 for plastic laminate.

C103008 1.2 ACRYLIC COUNTER TOPS

Provide 100% acrylic counter tops for use in non-residential construction.

Solid surfacing material shall consist of 100% pure acrylic polymer, mineral fillers, and pigments. The material shall be homogenous, not coated or laminated. Superficial damage to a depth of 0.010 inch (.254 mm) shall be repairable by sanding or polishing. Install with factory recommended fasteners/adhesives/sealant. Provide the following performance characteristics:

a. Tensile strength, ASTM D 638: 5800 psi minimum
b. Hardness, ASTM D 2583: Barcol Impressor 55 minimum
c. Flammability, ASTM E 84: Class I/A, flame spread 25 maximum; smoke developed 30 maximum
d. Thermal Expansion, ASTM D 696:.00002 in/in/F maximum
e. Boiling water resistance, NEMA LD 3: No effect
f. High temperature resistance, NEMA LD 3: No effect
g. Liquid absorption, ASTM D 570 (24 hours): 0.10 percent maximum
h. Mold and mildew growth, ASTM G 21: No growth, no effect
i. Bacteria growth, ASTM G 22: No growth, no effect
j. Sanitation, NSF 51: "Food Contact" approval for food area applications
k. Impact resistance, NEMA LD 3 (1/2 lb. ball drop): 1/4 inch material, 36 inch drop, no failure 1/2 inch material, 120 inch drop, no failure

C103009 CABINETS

This paragraph includes casework items that are permanently fixed in-place. Included are all cabinetry and millwork items with their associated accessories and anchoring devices.

C103009 1.1 WALL AND BASE CABINETS

Wall and base cabinets shall be of the same construction and appearance, with solid ends and frame fronts, or with frames all around. Frames shall be not less than 3/4 inch by 1 1/2 inches (19 mm by 38 mm) hardwood. All ends, bottoms, backs, and partitions shall be hardwood plywood. Cabinet doors and drawer fronts shall be a minimum 3/4 inch (19 mm) of either plywood or medium density fiberboard cores with solid edge bands.

C103009 1.1.1 Quality Standards

Wall and base cabinets shall be constructed to meet "Custom" quality grade as defined in AWI Quality Standards, except where this specification exceeds AWI Custom.

C103009 1.1.2 Hardware

Provide cabinet hardware including two self-closing hinges for each door and two side-mounted metal drawer slides for each drawer and pulls for all doors and drawers as follows. All cabinet hardware exposed to view shall be ANSI/BHMA 156.9, Grade 1, and comply with the following requirements:

a. Concealed Euro-Style, back mounted hinges with opening to 165 degrees and a self-closing feature at less than 90 degrees.
b. Drawer slides shall have a static rating capacity of 100 lbs. (444 N).
c. Provide adjustable shelving standards with shelf support hardware for wall cabinets.
d. Provide heavy-duty magnetic latch and door and drawer catch

C103009 1.1.3 Finish

Provide plastic laminate (NEMA LD3) or transparent finish with sealer and varnish as selected by Designer of Record.

C103012 1.1 FIRESTOPPING

Provide asbestos-free firestopping material capable of maintaining an effective barrier against flame, gases and temperature. Provide non-combustible firestopping that is non-toxic to human beings during installation or during fire conditions. Devices and equipment for firestopping service shall be UL FRD listed or FM P7825 approved for use with applicable construction, and penetrating items.

C103012 1.1.1 Fire Hazard Classification

Material shall have a flame-spread of 25 or less, a smoke developed rating of 50 or less when tested in accordance with UL 723 or UL listed and accepted.

C103012 1.1.2 Firestopping Rating

Firestopping materials shall be UL FRD listed or FM P7825 approved for "F" and "T" ratings at least equal to the fire-rating of the fire wall in which penetrated openings are to be protected.

C103013 SPRAYED FIRE-RESISTIVE MATERIALS

See PTS Section D40, *Fire Protection*, for additional requirements.

C103013 1.1 SPRAYED FIRE-RESISTIVE MATERIALS

C103013 1.1.1 Quality Assurance

A pre-installation conference shall be held with the manufacturer’s approved installer prior to the application of the sprayed fire-resistive materials. See Paragraph C10 1.2 for field testing requirements for the fire-resistive material. Products provided shall not contain asbestos per 40 CFR 763.

C103013 1.1.2 Warranty

Contractor shall provide manufacturer's standard materials and workmanship warranty stating that the manufacturer agrees to repair or replace materials that fail within 2 years, or as required by the project program, from date of Substantial Completion.

C103013 1.1.3 Material Composition

Provide sprayed fire-resistive material consisting of factory-mixed, dry formulation of gypsum or Portland cement binders and light-weight mineral or synthetic aggregates mixed with water at the Project site, or provide sprayed-fiber fire-resistive material consisting of factory-mixed, dry formulation of inorganic binders, mineral fibers, fillers, and additives conveyed in a dry state by pneumatic equipment and mixed with water at a spray nozzle to form a damp, as-applied product.

C103013 1.1.4 Physical Properties

a. Dry Density: 15 lb/cubic foot (240 kg/cubic meter) for referenced fire-resistance design to attain the ratings indicated, per ASTM E 605.
b. Thickness: Provide minimum average thickness required for fire-resistance design indicated according to the following criteria, but not less than 0.375 inch (9 mm), per ASTM E 605:

1) Where the referenced fire-resistance design lists a thickness of 1 inch (25 mm) or greater, the minimum allowable individual thickness of sprayed fire-restive material is the design thickness minus 0.25 inch (6 mm).

2) Where the referenced fire-resistance design lists a thickness of less than 1 inch (25 mm) but more than 0.375 inch (9 mm), the minimum allowable individual thickness of sprayed fire-resistive material is the greater of 0.375 inch (9 mm) or 75 percent of the design thickness.

3) No reduction in design thickness is permitted for those fire-resistance designs whose fire-resistance ratings were established at densities of less than 15 lb/cubic foot (240

kg/cubic meter).

c. Bond Strength: 150 lb/sq. ft. (7.2 kPa) minimum per ASTM E 736.
d. Compressive Strength: 5.21 lb/sq. in. (35.9 kPa) as determined per ASTM E 761. Minimum thickness of sprayed fire-resistive material tested shall be 0.75 inch (19 mm) and minimum dry density shall be as specified, but not less than 15 lb/cubic foot (240 kg/cubic meter).
e. Corrosion Resistance: No evidence of corrosion per ASTM E 937.
f. Deflection: No cracking, spalling, or delaminating per ASTM E 759.
g. Effect of Impact on Bonding: No cracking, spalling, or delaminating per ASTM E 759.
h. Air Erosion: Maximum weight loss of 0.025 g/sq. foot (0.270 g/sq. meter) in 24 hours per ASTM E 859.
i. Fire-Test-Response Characteristics: Provide sprayed fire-resistive materials with the following surface-burning characteristics per ASTM E 84 by United Laboratories: flame-spread index of 10 or less and a smoke developed index of 0.
j. Fungal Resistance: No observed growth on specimens per ASTM G 21.

C103014 ENTRANCE FLOOR GRILLES AND MATS

Provide entrance mats at all entrances to the facility. Provide recessed entrance mats at building entrances with enclosed vestibule and or surface applied entranceway mats or entranceway floor tiles at all other entrances. Entranceway mats and entranceway floor tile require the use of a transition edge where he mat adjoins other floor materials. Mat system shall meet ASTM D-2047 coefficient of friction requirements for dry and wet surfaces. All portions of mat system shall comply with ASTM E 648, Class I for flammability and ASTM E 662 for smoke development of â‰¤ 450. Fasteners shall be non-corrosive screws and anchors for securing frames together to floors. Provide continuous vinyl bottom cushion to quiet clatter at recessed entrance mat systems. Hinges shall be flexible aluminum or thermoplastic hinge retained in aluminum tread port, and allow debris and moisture to flow through recessed mat. Provide ball and socket hinge for easy roll-up of recessed mat inserts for cleaning. Recessed entrance mat systems shall use either an aluminum or thermoplastic framework and shall have replaceable wearing surface inserts. Provide inserts as follows:

a. Carpet Inserts - Carpet insert fiber shall be colorfast, solution dyed, anti-static, anti-microbial, and waterproof. Fiber shall be 100% nylon or polypropylene. Each carpet fiber shall be bonded to rigid ply backing to prevent fraying and supplied in continuous splice-free lengths. Carpet shall be minimum of 30-oz./ydÂ².
b. Vinyl or Rubber Inserts - Vinyl or rubber inserts shall be removable and be made from recycled materials wherever possible. Inserts shall have serrated edges for scraping purposed or flexible abrasive grit tape, bonded to a rigid vinyl tread insert.

C103014 1.1 RECESSED MAT ALUMINUM FRAME REQUIREMENTS

Aluminum frame and rail shall comply with ASTM B 221, alloy 6063-T5. Frame shall have butted corners and be factory coated with zinc chromate or manufacturer's standard protective finish where surfaces are in contact with concrete. Provide standard mill finish, color anodized finish complying with AAMA 606.1, clear anodized finish complying with AAMA 607.1, or bronze complying with ASTM B455, alloy 385.

-- End of Section --

SECTION C30

INTERIOR FINISHES
11/10

C30 GENERAL

RFP Part 3 including the Engineering System Requirements (ESR) provide project specific requirements. The RFP Part 4 Performance Technical Sections (PTS) provide generalized technical requirements that apply to multiple facility types and include more requirements than are applicable to this project. Therefore RFP Part 4 requirements that correspond and further define the RFP Part 3 requirements are specific to this project, other RFP Part 4 requirements are not required.

C30 1.1 DESIGN GUIDANCE

Provide the design and installation in accordance with the following references. This Performance Technical Specification (PTS) adds clarification to the fundamental requirements contained in the following Government Standards. The general requirements of this PTS section are located in PTS Section Z10, *General Performance Technical Specification*.

Industry standards, codes, and Government standards referenced in the section text that are not found in the Unified Master Reference List (UMRL) in the Construction Criteria Base (CCB) at the Whole Building Design Guide Website , are listed below for basic designation identification. Comply with the required and advisory portions of the current edition of the referenced standard at the time of contract award.

C30 1.1.1 Industry Standards And Codes

FLOOR COVERING INSTALLATION CONTRACTOR'S ASSOCIATION (FCICA)

FLOOR COVERING INSTALLATION BOARD (FCIB)

C30 1.1.2 Government Standards

UNIFIED FACILITIES CRITERIA (UFC)

UFC 1-200-01	General Building Requirements(A reference in this PTS section to UFC 1-200-01 requires compliance with the Tri-Service Core UFCs that are listed in UFGS Section 01 33 10.05 20, which includes the following significant UFC(s):UFC 3-100-10N, Architecture UFC 3-120-10, Interior Design)

C30 1.2 QUALITY ASSURANCE

C30 1.2.1 Paint Applicators Qualifications

C30 1.2.1.1 SSPC QP 1 Certification

For the application of industrial coatings identified in the Project Program, all contractors and subcontractors that perform surface preparation or coating application shall be certified by the Society for Protective Coatings (formerly Steel Structures Painting Council) (SSPC) to the requirements of SSPC QP 1 prior to contract award, and shall remain certified while accomplishing any surface preparation or coating application. The painting contractors and painting subcontractors must remain so certified for the duration of the project. If a contractor's or subcontractor's certification expires, the firm will not be allowed to perform any work until the certification is reissued. Requests for extension of time for any delay to the completion of the project due to an inactive certification will not be considered and liquidated damages will apply. Notify the Contracting Officer of any change in contractor certification status.

C30 1.2.2 Aircraft Maintenance Hangar and Vehicle Maintenance Flooring Installer Qualifications

The Designer of Record shall utilize UFGS Specification Section 09 67 23.14, *Fuel Resistive Resinous Flooring, 3-Coat*to provide the required installer qualifications for the floor coating system.

C30 1.3 PERFORMANCE VERIFICATION AND ACCEPTANCE TESTING

Verification of satisfactory interior finish assemblies' performance shall be via Performance Verification Testing, as detailed in this section of the RFP.

C30 1.3.1

Provide sample of textured ceiling application for DOR approval before resuming work. Sample shall be used as a reference for remaining application.

C30 1.3.2

Provide sample of multicolor paint application for DOR approval before resuming work. Sample shall be used as a reference for remaining application.

C30 1.3.3

Provide sample of terrazzo and/ or architectural cast-in-place concrete floor application for DOR approval before resuming work. Sample shall be used as a reference for remaining application.

C30 1.4 DESIGN SUBMITTALS

Design Submittals shall be in accordance with Z10, *General Performance Technical Specifications*, UFGS section 01 33 10.05 20, *Design Submittal Procedures*, UFC 1-300-09N, *Design Procedures* and UFC 3-100-10N, *Architecture*.

In addition, UFGS sections listed below or in the body of the PTS text are to be used by the Designer of Record (DOR) as a part of the design submittal. If the UFGS products or systems are applicable to the

project, the DOR shall edit these referenced UFGS sections and submit them as a part of the design submittal specification. Edit the specification sections in accordance with the limitations stated in PTS section Z10, General Performance Technical Specifications.

UFGS 09 67 23.14, *Fuel Resistive Resinous Flooring, 3-Coat*

C30 1.5 CONSTRUCTION SUBMITTALS

Submit construction submittals in accordance with PTS section Z10, *General Performance Technical Specifications*. In addition to the Z10 requirements, the Designer of Record (DOR) shall approve the following construction submittals as a minimum:

Paint, Finish materials, Finish colors

Installation drawings for floors with carpet, tile, stone, architectural cast-in-place concrete or terrazzo to include locations and details of seams, color and material transitions, details of divider strips, control joints, and crack control solutions.

Changes shall not be made to the finishes that are submitted and approved by the Government during the design phase. In the event that revisions may be required because of unforeseen conditions such as discontinued product, the revisions must be approved by the DOR and then submitted to the Government Interior Designer for approval before substitutions can be made.

C3010 WALL FINISHES

Interior wall finishes shall be moisture and mildew resistant, easily maintained, and suitable in accordance with industry standards for the architectural surface being finished. For painted wall finishes, refer to C3040 "INTERIOR PAINTING AND SPECIAL COATINGS".

C301001 CONCRETE WALL FINISHES

C301001 1.1 SPECIAL OR ARCHITECTURAL FINISHES ON INTERIOR CONCRETE WALLS

Cast-in-place or pre-cast concrete wall finishes shall include, but are not limited to, abrasive blasted surfaces, colored surfaces, exposed aggregate, grooved surfaces, or tooled surfaces.

C301002 PLASTER WALL FINISHES

Veneer plaster shall be gypsum plaster veneer finish on gypsum base finishes, or cement plaster veneer finish on concrete or masonry. Refer to Section C3040 for paint system and gloss level.

C301002 1.1 GYPSUM PLASTER

Provide gypsum neat plaster or high strength gypsum plaster base coat conforming to ASTM C28. High strength gypsum plaster shall have a compressive strength of not less than 2,500 psi, when tested dry in accordance with ASTM C472.

C301002 1.1.1

High strength gypsum gaging plaster finish coat shall have a

compressive strength of not less that 4,500 psi when tested dry in accordance with ASTM C472.

C301002 1.1.2

Provide gypsum molding plaster for ornamental plaster in accordance with ASTM C59.

C301002 1.1.3

Provide Keene's cement finish coat conforming to ASTM C61.

C301002 1.1.4

Provide acoustical gypsum plaster finish coat conforming to ASTM E1042 Type I or II Class A, noncombustible.

C301002 1.2 CEMENT PLASTER

C301002 1.2.1

Portland cement plaster base coat in accordance with ASTM C150, gray portland cement. Use Type I when no special characteristics are required, Type II when plaster and stucco will be exposed to moderate sulfate (alkali) action, Type III when early strength is needed as in cold weather, and Type V when high resistance to sulfate is required.

C301002 1.2.2

Portland cement plaster finish coat in accordance with ASTM C150, gray portland cement Type I when no special characteristics are required, Type II when plaster and stucco will be exposed to moderate sulfate (alkali) action, Type III when early strength is needed as in cold weather.

C301002 1.2.3

Factory-mixed finish coat according to the manufacturer's instructions.

C301003 GYPSUM WALLBOARD FINISHES

Conform to specifications, standards and requirements in accordance with Gypsum Association GA 214, GA 216 and GA 224. Provide asbestos free materials only. Provide Type X gypsum board in fire rated assemblies. Provide a foil back gypsum board when a vapor retarder is required.

C301003 1.1 REGULAR GYPSUM BOARD

ASTM C36/C36M and ASTM C1396/C1396M 1/2 or 5/8 inch (12.7 mm or 15.9 mm) thick in residential construction, and 5/8 inch (15.9 mm) thick in non-residential construction, tapered edges.

C301003 1.2 MOISTURE RESISTANT GYPSUM BOARD

ASTM C630/C630M, 1/2 or 5/8 inch (12.7 mm or 15.9 mm) thick in residential construction, and 5/8 inch (15.9 mm) thick in non-residential construction. Use in humid areas or spaces but not as a substrate in tiled areas where wall tile is exposed to direct moisture

contact or condensation accumulation.

C301003 1.3 CEMENTITIOUS BACKING UNITS

ANSI A108.11 and ANSI A118.9, 5/8 inch (15.9 mm) thick; use as a substrate for ceramic tile in wet areas that are exposed to direct moisture contact or condensation accumulation for areas including, but not limited to, tubs, shower enclosures, saunas, steam rooms, gang shower rooms, and shower drying rooms. Provide screws specifically designed for use with cement panels.

C301003 1.4 IMPACT RESISTANT GYPSUM BOARD

Reinforced gypsum panel with imbedded fiber mesh or polycarbonate resin thermoplastic backing, 5/8 inch (15.9 mm) thick, tapered edges, in accordance with Structural Failure Test; ASTM E695 or ASTM D2394 and Indentation Test; ASTM D5420 or ASTM D1037. Provide metal framing of 20-gauge minimum. Provide fasteners that meet manufacturer requirements and specifications. Impact resistant gypsum board shall have a flame spread rating of 25 or less and a smoke developed rating of 50 or less, ASTM E84. Finish with a high strength plaster veneer. Refer to PTS C10 for further requirements on impact resistant wall construction.

C301003 1.5 JOINT TREATMENT

ASTM C475, Joint compound shall be specifically formulated and manufactured for use with and compatible with tape, substrate and fasteners as recommended by the manufacturer. Tape and finish gypsum board in accordance with ASTM C840, GA 214 and GA 216. Provide pre-manufactured joints at all structural expansion joints, crack control joints, and change of materials as recommended by the manufacturer and in accordance with GA 216.

C301003 1.6 FASTENERS

ASTM C514. Fasteners shall be compatible with each type of gypsum board material as recommended by the gypsum board manufacturer and in accordance with GA 216 and GA 224.

C301003 1.7 ACCESSORIES

ASTM C1047. Fabricate from corrosion protected steel or plastic designed for intended use. Accessories manufactured with paper flanges are not acceptable. Flanges shall be free of dirt, grease, and other materials that may adversely affect bond of joint treatment. Provide prefinished or job decorated materials. For pre-decorated gypsum board provide prefinished metal or plastic trim to match pre-decorated gypsum board. Install as recommended by GA 214, GA 216 and GA 224.

C301003 1.8 LEVEL OF FINISH

C301003 1.8.1

Tape and finish gypsum board in accordance with ASTM C840, GA 214 and GA 216. Plenum areas above ceilings shall be finished to GA 214, Level 1. Water resistant gypsum backing board, ASTM C630/C630M, to receive ceramic tile shall be finished to GA 214, Level 2. Walls to receive a heavy-grade wall covering or have textured finish before painting shall be finished to GA 214 Level 3. Walls without wall wash lighting to receive paint (MPI Gloss Level 2), light textures, or wall coverings shall be finished to

GA 214 Level 4. Unless otherwise specified, all gypsum board walls, partitions shall be finished to GA 214 Level 5. Provide joint, fastener depression, and corner treatment. Do not use fiberglass mesh tape with conventional drying type joint compounds; use setting or hardening type compounds only. Provide treatment for water-resistant gypsum board as recommended by the gypsum board manufacturer.

C301003 1.8.2

Wherever gypsum board is to receive eggshell (MPI Gloss Level 3), semigloss (MPI Gloss Level 5), or gloss (MPI Gloss Level 6) paint finish, finish gypsum wall surface to GA 214 Level 5.

C301003 1.8.3

Where wall wash lighting will accent the flatness of the wall and surface irregularities in gypsum board joints, provide feature edge gypsum board and two coat joint compound fillers. Provide this special joint treatment at up lighting, down lighting and horizontal lighting at the end of a passageway wall.

C301004 TILE AND TERRAZZO WALL FINISHES

C301004 1.1 CERAMIC TILE WALL SYSTEM FINISHES

Provide ceramic tile wall systems as defined in the Tile Council of America (TCA) handbook for ceramic tile installations suitable for the service requirements listed. Install systems in accordance with ANSI A108/A118 series standards. Colored grout with sealer shall be provided. Coordinate with ceramic bath accessories for modularity. Include all trim pieces, caps, stops, and returns to complete installation.

C301004 1.1.1

Ceramic Mosaic Wall Tile shall be a minimum of 1/4 inch (6 mm) thick and installed from floor to ceiling, unless otherwise noted.

C301004 1.1.2

Wall tile shall be glazed, matte glazed or unglazed finish. Refer to project program for tile type, pattern, and surface texture.

C301004 1.1.3

Porcelain wall tile shall be through color, polished or unpolished. Refer to project program for tile type, pattern, and surface texture.

C301004 1.1.4

Provide wall tile color and style selections a minimum of one grade above base grade.

C301004 1.1.5

Provide Designer accent tile, accent strips and accessory ceramic tile shapes as an integral part of the ceramic wall tile system.

C3020 FLOOR FINISHES

Refer to C3040 "INTERIOR PAINTING AND SPECIAL FINISHES" for painted floor coatings.

C302001 TILE FLOOR FINISHES

Provide ceramic tile floor systems as defined in the Tile Council of America (TCA) handbook for ceramic tile installation and materials for the service requirements listed. Provide installation and materials in accordance with ANSI A108/A118 series standards, except do not use organic adhesives. Provide manufacturer's full range of colors and styles. Tile shall be a minimum of one grade above base grade.

Mortar shall be Portland cement, ANSI A108.1A/1B/1C/ A118.1, Latex-portland cement, ANSI A108.5/A118.4 or Epoxy ANSI A108.6/A118.3.

Grout shall be factory sanded Portland cement, ANSI A108.10/A118.6, Latex-portland cement, ANSI A108.10/A118.7 or Epoxy ANSI A108.6/A118.3. Provide tile joint grout sealer on white, light colored areas that are routinely exposed to water and liquid cleaning materials, entrance areas, and areas that require a high degree of stain resistance, and as required by the manufacturer. Provide chemical resistant epoxy resin for kitchens and other areas where high resistance to staining and absorption are required, ANSI A118.3.

Slip resistant tile shall have a minimum Coefficient of Friction (wet and dry) of 0.6, ASTM C1028. Tile shall have smooth, non-slip or textured surface and a glazed or unglazed finish. Non-slip or textured surface required for tile in areas where there is excessive water or grease and oils such as kitchens, dining facilities, toilets, and in industrial and maintenance facilities.

C302001 1.1 CERAMIC GLAZED FLOOR TILES

Ceramic glazed floor tiles shall be a minimum of 5/16 inch (8 mm) thick with a minimum of 1/8 inch (3 mm) grout width with cushioned edge. Tile shall have a 0.5 to 3.0 percent water absorption rate, ASTM C373. Do not use in areas where there is excessive water or grease and oils such as kitchens, dining facilities, toilets, showers, shower drying rooms, building entrance areas, and in industrial and maintenance facilities.

C302010 HARDENERS AND SEALERS

C302010 1.1 HARDENED AND SEALED CURE CONCRETE FLOORS

Harden and seal concrete floors in accordance with the finished floor manufacture requirements. Utilize other methods of concrete curing if the floor finish manufacturer does not recommend a chemical hardener or sealer. Concrete floors that can utilize a hardener-sealer and will be exposed to traffic shall receive a minimum of two coats of hardener-sealer curing agent for dust protection. These hardener-sealer-cured floors shall be finished with a curing agent that shall penetrate the concrete to permanently seal the floor against moisture and the penetration of contaminants. The curing agent shall be non-toxic, non-flammable, and non-combustible and shall be installed in accordance with the manufacturer's printed instructions. The finished floor shall be dust-free.

C3030 CEILING FINISHES

Refer to C3040 "INTERIOR PAINTING AND SPECIAL COATINGS" for painted ceiling finishes.

C303001 ACOUSTICAL CEILING TILES AND PANELS

C303001 1.1 ACOUSTICAL CEILING PANELS

All acoustical ceiling panels shall be 24 inch by 24 inch (610 mm by 610 mm), with a minimum light reflectance of .75 (except as noted), Class A, flame spread 25 or less and smoke development of 50 or less, ASTM E84. All acoustical ceiling panels shall have minimum 60% recycled content except as noted. Acoustical ceiling panels shall conform to ASTM E1264. Provide square edge except as noted.

C303001 1.1.1

For typical open office areas, conference rooms, executive offices, provide non-asbestos mineral composition acoustical ceiling panels of Type III with factory-applied standard washable painted finish or Type IV with factory-applied plastic membrane-faced vinyl, Form: 1, 2, or 3. Provide reveal edge in lobbies, conference rooms and command suites; otherwise, provide square edge in all other locations to receive acoustical panels.

C303001 1.1.2

For typical humid areas such as toilets, kitchens, fitness and locker rooms, provide non-asbestos mineral or glass composition acoustical ceiling panels bonded with ceramic, moisture resistant thermo-setting resin, or other moisture resistant material with factory-applied standard washable painted finish; and recycled content: minimum of 40%.

C303001 1.1.3

For areas with very high humidity, heavy soiling, staining, impact abrasion, or limited security concerns, such as bachelor's quarters, laundry rooms, or maintenance shops, provide Type V, Steel or Type VII, aluminum faces with white baked on enamel finish, and non-asbestos mineral composition absorbent backing.

C303001 1.1.5

Provide NRC and CAC ratings as follows:

Type of space	Minimum NRC	Minimum CAC
Open Office Areas	.75	40-44
Conference Rooms, Classrooms	.60	35-39
Activity spaces, Lobbies, Corridors	.60	35-39
Executive offices	.60	35-39
Toilets	.50	35-39

Kitchens	.50	35-39
Fitness/Locker Rms	.50	35-39
All other spaces	.50	35-39

Base the tested NRC value on Mounting Type E-400 of ASTM E795.

C303002 GYPSUM WALLBOARD CEILING FINISHES

Conform to specifications, standards and requirements in accordance with Gypsum Association GA 214, GA 216 and GA 224. Provide asbestos free materials only. Provide featured edge gypsum board on all gypsum surfaces that flatness of joints will be visible, such as uplighted ceilings, window lighted ceilings, and as recommended by the manufacturer. Provide Type X gypsum board in fire rated assemblies.

C303002 1.1 REGULAR GYPSUM BOARD

ASTM C36/C36M and ASTM C1396/C1396M, 1/2 or 5/8 inch(12.7 mm or 15.9 mm) thick, tapered edge. Provide 5/8 inch (15.9 mm) for all projects except for single family residential, which may utilize 1/2 inch (12.7 mm) if other requirements, such as sound control, are met.

C303002 1.2 MOISTURE RESISTANT GYPSUM BOARD

ASTM C630/C630M, 1/2 or 5/8 inch (12.7 mm or 15.9 mm) thick, tapered edges. Use for ceilings in humid areas. Do not use as a substrate in tiled areas where tile will be exposed to direct moisture contact or condensation accumulation. Support moisture resistant gypsum board at 12 inches (305 mm) on center. Provide 1/2 inch (12.7 mm) for single-family residential projects only. Provide 5/8 inch (15.9 mm) for all other projects.

C303002 1.3 CEMENTITIOUS BACKING UNITS

ANSI A108.11 and ANSI A118.9, 1/2 or 5/8 inch (12.7 mm or 15.9 mm) thick; use for adhesive applied ceramic tile in wet areas (tubs, shower enclosures, saunas, steam rooms, gang shower rooms, or for shower areas with a veneer plaster finish. Support cementitious backing units at 12 inches (305 mm) on center. Provide screws specifically designed for use with cement panels.

C303002 1.6 JOINT TREATMENT

ASTM C475, Joint compound shall be specifically formulated and manufactured for use with and compatible with tape, substrate and fasteners as recommended by the manufacturer. Tape and finish gypsum board in accordance with ASTM C840, GA 214 and GA 216. Provide pre-manufactured joints at all structural expansion joints, crack control joints, and change of materials as recommended by the manufacturer and in accordance with GA 216.

C303002 1.7 FASTENERS

ASTM C514, Fasteners shall be compatible with each type of gypsum board material as recommended by the gypsum board manufacturer and in accordance with GA 216 and GA 224.

C303002 1.8 ACCESSORIES

ASTM C1047, Fabricate from corrosion protected steel or plastic designed for intended use. Accessories manufactured with paper flanges are not acceptable. Flanges shall be free of dirt, grease, and other materials that may adversely affect bond of joint treatment. Provide prefinished or job decorated materials. Install as recommended by GA 214, GA 216 and GA 224.

C303002 1.9 LEVEL OF FINISH

C303002 1.9.1

Tape and finish gypsum board in accordance with ASTM C840, GA 214 and GA 216. Ceilings to receive a heavy-grade wall covering or heavy textured finish before painting shall be finished to GA 214, Level 3. Ceilings without critical lighting to receive flat paints, light textures, or wall coverings shall be finished to GA 214, Level 4. Unless otherwise specified, all gypsum board walls, partitions and ceilings shall be finished to GA 214, Level 5. Provide joint, fastener depression, and corner treatment. Do not use fiberglass mesh tape with conventional drying type joint compounds; use setting or hardening type compounds only. Provide treatment for water-resistant gypsum board as recommended by the gypsum board manufacturer.

C303002 1.9.2

Wherever gypsum board is to receive eggshell, semi-gloss or gloss paint finish, or where severe, up or down lighting conditions occur, finish gypsum wall surface to GA 214 Level 5. In accordance with GA 214 Level 5, apply a thin skim coat of joint compound to the entire gypsum board surface, after the two-coat

C303005 SUSPENSION SYSTEMS

C303005 1.1 EXPOSED SUSPENDED ACOUSTICAL CEILING GRID

Provide 24 inch by 24 inch (610 mm by 610 mm) aluminum or steel non-corroding intermediate-duty standard grid system for lay-in acoustical panels (ASTM C635). Finish shall be factory applied white baked enamel. Provide manufacturer's hold down clips for fire rated assemblies and wall or edge molding. Hang grid system as recommended by manufacturer but with no less than 0.106 inch (2.7 mm) diameter wires (ASTM A641A, A641M, Class 1), or with one by 3/16 inch (4.76 mm) galvanized steel straps conforming to ASTM A653A, A653M (for light commercial zinc coating) or ASTM A366A, A366M (with an electrodeposited zinc coating, Type RS). Use ASTM A580/A580M, composition 302 or 304, condition annealed stainless steel, 0.106 inches (2.7 mm) in diameter over high humidity areas such as commercial kitchens and pools. Install suspended grid system with acoustical sealant (ASTM C843, non-staining and ASTM C636). Recycled content shall be a minimum of 25%.

C303006 METAL STRIP CEILINGS

Not Used.

C303090 OTHER CEILING AND CEILING FINISHES

C3040 INTERIOR COATINGS AND SPECIAL FINISHES

The following coatings are applied directly to all surfaces of interior construction.

C304001 GENERAL REQUIREMENTS

All paint shall be suitable in accordance with the Master Painter Institute (MPI) standards for the interior architectural surface being finished. The current MPI, "Approved Product List" as of the date of contract award, will be used to determine compliance with the submittal requirements of this specification. The Contractor may choose to use a more current MPI "Approved Product List"; however, only one list may be used for the entire contract. All coats on a particular substrate, or a paint system, must be from a single manufacturer. No variation from the MPI Approved Products List is acceptable.

Paints and coatings shall comply with Master Painters Institute Green Performance Standard GPS-1-08 which is available at the following website; http://www.specifygreen.com/EvrPerf/EnvironmentalPerformance.html . Provide Interior flat intermediate and topcoats of a maximum of 50 g/L VOC and interior non-flat intermediate and topcoats of a maximum 150 g/L VOC. Choose paints that provide performance and are environmentally friendly by using LEED VOC Budgeting to analyze the total impact of all flat, non-flat and special purpose coatings on the project.

MPI paint systems identified in the RFP take precedence over other available MPI systems. The RFP does not identify all paint system applicable to all painting of the facility, therefore utilize the *MPI Architectural Painting, Interior Systems Manual* to identify other appropriate paint systems for the project. Utilize the "Premium Grade" systems and comply with all limitations stated in the MPI "Approved Product List" for each paint product. Products having an MPI EPR 3 rating shall be given preferential consideration over lower EPR ratings. Use higher performing paint systems unless the lower performing paint system can be justified based on a lifecycle cost to include surface preparation, application, disposal, environmental impact, and required recoating cycles. Only use paint products that have been tested for MPI'S "DETAILED PERFORMANCE". Do not use products that have been tested for "INTENDED USE".

C304001 1.1 MPI GLOSS LEVELS

Gloss levels shall comply with the MPI system of determining gloss as defined in the Evaluation sections of the MPI Manuals. Utilize the performance characteristics of the paint gloss and sheen to categorize paint rather than manufactures' description of his product.

The MPI Gloss Levels are indicated by the notation G1, G2, G3, G4, G5, G6, or G7. Use G2 "Velvet-like" Flat for ceilings, residential walls away from human contact and low traffic areas. Use G3 "Eggshell-like" in high traffic areas for ceilings and walls, when human contact with the wall is limited, and for dark accent colors. Use G5 Semi-gloss for ceilings, walls, doors and trim for high durability and clean ability when a surface is expected to have human contact and is routinely touched. Use G6 Gloss only in special situations such as for piping identification or special effects. The MPI Gloss and Sheen Standard values are measured per ASTM D523, method D and are as follows:

Gloss Level Number	Gloss@ 60 Degrees	Sheen@85 Degrees
Gloss Level 1(G1) - Matte or Flat	Max.5 units	Max.10 units

Gloss Level 2(G2) - "Velvet-like" Flat	Max. 10 units	10-35 units
Gloss Level 3(G3) - "Eggshell-like"	Max. 10-25 units	10-35 units
Gloss Level 4(G4) - "Satin-like"	Max. 20-35 units	Min. 35 units
Gloss Level 5(G5) - Semi-Gloss	35-70 units	
Gloss Level 6(G6) - Gloss	70-85 units	
Gloss Level 7(G7) - High Gloss	More than 85 units	

C304001 1.2 MPI SYSTEM DESIGNATIONS AND ABBREVIATIONS

The MPI coating system number in each Division is found in either the *MPI Architectural Painting Specification Manual* or the *Maintenance Repainting Manual* and defined as an interior system (INT/RIN).

a. INT designates an interior coating system for new surfaces.
b. RIN designates an interior coating system used in repainting projects or over existing coating systems.
c. DSD – the MPI short-term designation for Degree of Surface Degradation as defined in the Assessment sections in the *MPI Maintenance Repainting Manual*. Degree of Surface Degradation designates the MPI Standard for description and appearance of existing condition of surfaces to be painted. This DSD classification is used to determine the proper surface preparation necessary for painting.
d. DFT – The short-term designation for dry film thickness. DFT is the minimum acceptable depth or thickness of a coating or system in the dry state. The maximum acceptable DFT is not more than 50% greater than the minimum acceptable DFT (example... DFT = 2 mils, maximum DFT = 3 mils). The DFT indicated in the paint systems below relate to new coatings - MPI INT. MPI RIN will be less than the indicated DFT.
e. Paint System Abbreviations: BF - Block Filler; C – Clear coat; P – Primer coat; I – Intermediate coat; T – Topcoat.

C304001 1.3 SURFACE PREPARATION

Comply with the "Interior Surface Preparation" section of the *MPI Architectural Painting Specification Manual* or the "Interior Surface Preparation" section of the *MPI Maintenance Repainting Manual*. All suggestive language such as "may" or "should" are deleted from the standard and "must" or "shall" inserted in its place. Suggestive language such as "recommended" or "advisable" is deleted from the standard and "require" or 'required" inserted in its place. The results of these wording substitutions change this document to required procedures. For surface preparation, determine a MPI DSD Assessment of each surface and comply with the MPI Surface Preparation Requirements relating to the assessments. Notwithstanding MPI requirements, clean interior ferrous metal to a SSPC SP 10 level (near white) that have aggressive chemical environments (SSPC Zones 3A, 3B, 3C, 3D, and 3E) or waterfront exposure to open structures (SSPC Zones 2A or 2B). Examples of these types of facilities are indoor water training facilities, indoor swimming pools, and open or mostly open waterfront maintenance buildings/ waterfront warehouses/ canopies.

C304002 CONCRETE FINISHES

C304002 1.1

New and uncoated existing vertical concrete surfaces and underside of mezzanines/ stairs, and previously painted concrete surfaces:

a. High Performance Architectural Latex, System DFT: 4 mils

1) MPI INT 3.1C-G2/RIN 3.1J-G2 (Flat); P: MPI 3, I: MPI 138, T: MPI 138

2) MPI INT 3.1C-G3/RIN 3.1J-G3 (Eggshell-like); P: MPI 3, I: MPI 139, T: MPI 139

3) MPI INT 3.1C-G5/RIN 3.1J-G5 (Semi-gloss); P: MPI 3, I: MPI 141, T: MPI 141

b. Institutional Low Odor / Low VOC Latex (for repaint of existing occupied spaces), System DFT: 4 mils

1) MPI RIN 3.1L-G3 (Eggshell-like); P: MPI 3, I: MPI 145, T: MPI 145

2) MPI RIN 3.1L-G5 (Semi-gloss); P: MPI 3, I: MPI 147, T: MPI 147

C304002 1.2

New and uncoated existing and Existing, previously painted Concrete surfaces in toilets, food-preparation, food-serving, restrooms, laundry areas, shower areas, areas requiring a high degree of sanitation, and other high humidity areas unless otherwise specified, (Fill all holes in masonry surface):

- Epoxy, System DFT: 4 mils

1) MPI INT 3.1P-G3/4 /RIN 3.1E-G3/4 (Low gloss); P: MPI 108, I: MPI N/A, T: MPI 108

2) MPI INT 3.1Q-G6 /RIN 3.1E-G6 (Gloss); P: MPI 108, I: MPI N/A, T: MPI 98

C304002 1.3

New and uncoated existing concrete floors:

a. Latex Floor Paint (Not for heavy foot traffic or vehicular traffic - only use as recommended by MPI's Evaluation of Interior Systems for Architectural Painting), MPI INT/RIN 3.2A-G2 (Flat); System DFT: 5 mils, P: MPI 60, I: MPI 60, T: MPI 60

b. Epoxy (not for vehicular traffic), DFT: 5 mils

1) MPI INT 3.2L-G3/4 (Low gloss), System , P: MPI 108, I: N/A, T: MPI 108

2) MPI INT 3.2M-G6 (Gloss), P: MPI 108, I: N/A, T: MPI 98 (Add slip resistant additive),

C304003 CONCRETE MASONRY FINISHES

C304003 1.1

New and uncoated Existing Concrete masonry (not for profiled/split faced block):

a. High Performance Architectural Latex, System DFT: 11 mils

1) MPI INT 4.2D-G2 (Flat); BF: MPI 4, P: N/A, I: MPI 138, T: MPI 138

2) MPI INT 4.2D-G3 (Eggshell-like); BF: MPI 4, P: N/A, I: MPI 139, T: MPI 139

3) MPI INT 4.2D-G5 (Semi-gloss); BF: MPI 4, P: N/A, I: MPI 141, T: MPI 141

b. Multi-color, MPI INT 4.2H, BF: MPI 4, P: MPI 125, I: MPI 112, T: MPI 112, C: MPI 121

C304003 1.2

Existing, previously painted Concrete masonry:

a. High Performance Architectural Latex, System DFT: 4.5 mils

1) MPI RIN 4.2K-G2 (Flat); Spot Prime: MPI 138/ Full Prime: MPI 50 (for DSD 3 existing conditions), I: MPI 138, T: MPI 138

2) MPI RIN 4.2K-G3 (Eggshell-like); Spot Prime: MPI 139/ Full Prime: MPI 50 (for DSD 3 existing conditions), I: MPI 139, T: MPI 139

3) MPI RIN 4.2K-G5 (Semi-gloss); Spot Prime: MPI 141/ Full Prime: MPI 50 (for DSD 3 existing conditions), I: MPI 141, T: MPI 141

b. Institutional Low Odor / Low VOC Latex (for repaint of existing occupied spaces), System DFT: 4 mils

1) MPI RIN 4.2L-G3 (Eggshell-like); Spot Prime: MPI 145/ Full Prime: MPI 50 (for DSD 3 existing conditions), I: MPI 145, T: MPI 145

2) MPI RIN 4.2L-G5 (Semi-gloss); Spot Prime: MPI 147/ Full Prime: MPI 50 (for DSD 3 existing conditions), I: MPI 147, T: MPI 147

c. Multi-color, MPI RIN 4.2E; Spot Prime: MPI 125, I: MPI 112, T: MPI 112, C: MPI 121

C304003 1.3

New and uncoated Existing Concrete masonry units in toilets, food-preparation, food-serving, restrooms, laundry areas, shower areas, areas requiring a high degree of sanitation, and other high humidity areas unless otherwise specified, (Patch imperfections and fill all masonry surface voids with block filler):

1. Epoxy, System DFT: 10 mils

1) MPI INT 4.2R-G3/4 (Low gloss); BF: MPI 116, P: 108, I: N/A, T: MPI 108

2) MPI INT 4.2S-G6 (Gloss); BF: MPI 116, P: 108, I: N/A, T: MPI 98

C304003 1.4

Existing, previously painted, concrete masonry units in toilets, food-preparation, food-serving, restrooms, laundry areas, shower areas, areas requiring a high degree of sanitation, and other high humidity areas unless otherwise specified (Patch imperfections and fill all masonry surface voids with block filler):

a. Epoxy, System DFT: 5 mils;

1) MPI RIN 4.2R-G3/4 (Low gloss); Spot prime: MPI 108, I: N/A, T:

MPI 108

2) MPI RIN 4.2S-G6 (Gloss); Spot prime: MPI 98, I: N/A, T: MPI 98

C304004 METAL FINISHES

C304004 1.1

New steel/ferrous surfaces not otherwise specified:

a. High Performance Architectural Latex, System DFT: 5 mils

1) MPI INT 5.1R-G3 (Eggshell-like); P: MPI 79, I: MPI 139, T: MPI 139

2) MPI INT 5.1R-G5 (Semi-gloss); P: MPI 79, I: MPI 141, T: MPI 141

C304004 1.2

New and Existing, previously painted steel/ferrous surfaces in toilet, food preparation, food serving, restrooms, shower areas and areas requiring a high degree of sanitation and other high humidity areas not otherwise specified except floors, hot metal surfaces, and new prefinished equipment:

a. Epoxy, System DFT: 10 mils

1) MPI INT 5.1Y/ RIN 5.1Y-G5 (Semi-gloss); P: MPI 101, I: MPI 108, T: MPI 108

2) MPI INT 5.1Z/ RIN 5.1Z-G5 (Semi-gloss); P: MPI 101, I: MPI 98, T: MPI 98

C304004 1.3

New and Existing, previously painted miscellaneous non-ferrous (non-hand contact aluminum and copper) surfaces not otherwise specified:

a. High Performance Architectural Latex, System . MPI INT 5.4F-G5 (Semi-gloss), DFT: 5 mils; P: MPI 95, I: MPI 141, T: MPI 141

C304004 1.4

New and existing unpainted galvanized doors not otherwise specified:

a. Epoxy, System, MPI INT 5.3D-G6 (Gloss); P: MPI 101, I: MPI 77, T: MPI 77

C304006 GYPSUM WALL BOARD FINISHES

C304006 1.1

New and Existing, previously painted Gypsum Wallboard not otherwise specified (interior gypsum finish of exterior wall):

a. High Performance Architectural Latex, System DFT: 4 mils

1) MPI INT/RIN 9.2B-G2 (Flat); P: MPI 50, I: MPI 138, T: MPI 138

2) MPI INT/RIN 9.2B-G3 (Eggshell-like); P: MPI 50, I: MPI 139, T: MPI 139

3) MPI INT/RIN 9.2B-G5 (Semi-gloss); P: MPI 50, I: MPI 141, T: MPI 141

b. Institutional Low Odor / Low VOC Latex (for repaint of existing occupied spaces), System DFT: 4 mils

1) MPI RIN 9.2M-G3 (Eggshell-like); P: MPI 50, I: MPI 145, T: MPI 145

2) MPI RIN 9.2M-G4 (Satin-like); P: MPI 50, I: MPI 146, T: MPI 146

3) MPI RIN 9.2M-G5 (Semi-gloss); P: MPI 50, I: MPI 147, T: MPI 147

c. Multi-color, MPI INT9.2G; P: MPI 125, I: MPI 112, T: MPI 112, Clear Coat: MPI 121

C304006 1.2

New and Existing, previously painted Gypsum Wallboard in toilets, food-preparation, food-serving, restrooms, laundry areas, shower areas, areas requiring a high degree of sanitation, and other high humidity areas not otherwise specified:

a. Epoxy, Use for high humidity areas requiring easy cleaning enamel finishes. System DFT: 4 mils,

1) MPI INT 9.2N-G3/4 / MPI RIN 9.2N-G3/4 (Low gloss) P: MPI 50, I: MPI 108, T: MPI 108

2) MPI INT 9.2P-G6 / MPI RIN 9.2P-G6 (Gloss) P: MPI 50, I: MPI 98, T: MPI 98

-- End of Section --

SECTION D10

CONVEYING
11/10

D10 GENERAL

RFP Part 3 including the Engineering System Requirements (ESR) provide project specific requirements. The RFP Part 4 Performance Technical Sections (PTS) provide generalized technical requirements that apply to multiple facility types and include more requirements than are applicable to this project. Therefore RFP Part 4 requirements that correspond and further define the RFP Part 3 requirements are specific to this project, other RFP Part 4 requirements are not required.

D10 1.1 DESIGN GUIDANCE

Provide the design and installation in accordance with the following references. This Performance Technical Specification (PTS) adds clarification to the fundamental requirements contained in the following Government Standards. The general requirements of this PTS section are located in PTS Section Z10, *General Performance Technical Specification*.

Industry standards, codes, and Government standards referenced in the section text that are **not** found in the Unified Master Reference List (UMRL) in the Construction Criteria Base (CCB) at the Whole Building Design Guide Website , are listed below for basic designation identification. Comply with the required and advisory portions of the current edition of the referenced standard at the time of contract award.

D10 1.1.1 Industry Standards and Codes

Although some the following references are listed in the UMRL, they are repeated here for emphasis.

ASME A17.1, *Safety Code for Elevators and Escalators*

ASME A17.2, *Guide for Inspection of Elevators, Escalators, and Moving Walks*

ASME A18.1, *Safety Standard for Platform Lifts and Stairway Chairlifts*

ASME B20.1, *Safety Standards for Conveyors and Related Equipment*

ASME B30.11, *Safety Standard for Monorails and Underhung Cranes*

ASME B30.16, *Safety Standard for Overhead Hoists*

ASME B30.17, *Safety Standard for Overhead and Gantry Cranes (Top Running Bridge, Single Girder, Underhung Hoists)*

D10 1.1.2 Government Standards

NAVAL FACILITIES ENGINEERING COMMAND (NAVFAC)

ITG NAVFAC Elevator Design Guide(2001) - (This guide can be found at the following web address: http://www.wbdg.org/ccb/NAVFAC/INTCRIT/fy01_01.pdf)

D10 1.2 PERFORMANCE VERIFICATION AND ACCEPTANCE TESTING

Verification of satisfactory Conveying systems performance shall be via Performance Verification Testing, as detailed in this section of the RFP.

D10 1.2.1 Testing and Inspections for Elevators

a. All testing and inspections shall be conducted in the presence of both the Elevator Specialist and a NAVFAC Certified Elevator Inspector. The Elevator Inspector shall complete, sign and post the results of all tests and inspection results after successful completion of inspection and testing. The Contractor is responsible for all costs involved with reinspection and retesting required to correct discrepancies discovered during testing and the subsequent retesting required, including all costs and expenses incurred by the Government Furnished Inspector.

b. Testing Materials and Instruments

Provide testing materials and instruments required for final inspection, including a current equipment calibration certification.

c. Field Tests for Elevators

In addition to the tests required by ASME A17.1 AND ASME A17.2, perform the following:

1) Endurance Tests - Test each elevator for a period of one hour continuous run, with specified rated load in the car. Restart the one hour test period from beginning, following any shutdown or failure. During the test run, stop car at each floor in both directions of travel for standing period of 10 seconds per floor. The requirements for Rated Speed, Leveling, Temperature Rise, and Motor Amperes testing specified herein shall be met throughout the duration of the Endurance test.

2) Speed Tests - Determine actual speed of each elevator in both directions of travel with rated load and with no load in elevator car. Minimum acceptable elevator speed is the Rated speed specified. Maximum acceptable elevator speed is 110 percent of Rated speed.

3) Leveling Tests - Test elevator car leveling devices for landing accuracy of plus or minus 1/4-inch (6 mm) at each floor with no load in car, symmetrical load in car, and with rated load in car in both directions of travel. Car sill must be level with landing sills.

4) Temperature Rise Tests - Determine temperature rise of elevator hoisting motor, motor-generator, exciter, and booster during full-load test run for one hour minimum. Under these conditions, maximum acceptable temperature rise shall not exceed acceptable temperature rise indicated on manufacturer's data plate. Start test only when equipment is within 9 degrees F (5 degrees C) of ambient temperature.

5) Motor Ampere Tests - Measure and record motor amperage when motor is running and elevator is lifting at rated load and speed. Measure and record motor amperage at beginning and end of Endurance test. Test results must not exceed nameplate amperage when motor is running and elevator is lifting at rated load speed.

6) Balance Load for Electric Elevators Tests - Perform electrical and mechanical balance load tests of car and counterweight.

7) Automatic Shutoff Valve Tests - Test the automatic shutoff valve twice. Once at beginning of acceptance test and again at conclusion of one-hour Endurance test to ensure consistent performance of shutoff valve, regardless of temperature of equipment and oil.

8) Perform miscellaneous tests called for in this Section.

D10 1.2.2 Crane System or Monorail with Hoist/Trolley System Installation and Certification

Erect and install the crane or monorail system, complete in accordance with the approved submittals and in condition to perform the operational and acceptance tests.

a. Certification

1) Load Chain or Wire Rope - Submit factory certification of rated capacity. Submit certification of minimum wire rope breaking strength for each hoist.

2) Overload Test Certificate - Submit a statement that the crane or monorail with hoist/trolley system can be periodically load tested to 125 percent (plus 5 minus 0) of rated load.

b. b. Inspection and Testing

After erection, the Contractor, a representative of the Contracting Officer, and a representative of the activity's weight handling equipment (WHE) certifying official shall jointly inspect the crane system or monorail/hoist/trolley systems and components to determine compliance with specifications and approved submittals. The WHE certifying official is the designated representative of the command empowered to designate lifting and handling equipment acceptable for use. The Contractor shall notify the Contracting Officer 14 calendar days before the inspection. Contractor shall provide a report of the inspection indicating the crane or monorail system is considered ready for operational tests.

1) Operational Tests - After erection and inspection, test the crane or monorail with hoist/trolley as specified herein. Test the systems in service to determine that each component of the system operates as specified, is properly installed and adjusted, and is free from defects in material, manufacturer, installation, and workmanship. Rectify all deficiencies disclosed by testing and retest the system or component to prove the system is operational. The Contractor shall furnish loads for testing, operating personnel, instruments, and all other necessary apparatus.

2) Test Data - Record test data on appropriate test record forms suitable for retention for the life of the crane or monorail with hoist/trolley system. Record operating and startup current measurements for electrical equipment (motors and coils) using appropriate instrumentation (i.e., clamp-on ammeters). Compare recorded values with design specifications or manufacturer's recommended values; abnormal differences (i.e., greater than 10 percent from manufacturer's or design values)

shall be justified or appropriate adjustments performed. In addition, high temperatures or abnormal operation of any equipment or machinery shall be noted, investigated, and corrected. Record crane or monorail with hoist/trolley speeds during each test cycle.

3) Hook Test - Measure hook for hook throat spread before and after load test. Establish a throat dimension base measurement by installing two tram points and measuring the distance between these tram points (plus or minus 1/64-inch (0.4 mm)). Record this base dimension. Measure the distance between tram points before and after load test. An increase in the throat opening by more than 5 percent from the base measurement shall be cause for rejection.

4) Load Hook Inspection - Magnetic particle inspect the hook and nut over the entire area in accordance with ASTM A 275/A 275M. Acceptance standard shall be no defects. A defect is defined as a linear indication that is greater than 1/16-inch (1.6 mm) long whose length is equal to or greater than three times it width.

The magnetic particle inspection report shall include a letter from the performing vendor stating they meet ASTM E543. In addition, the report shall include technique sheets used describing the orientation of the hook and nut to the magnetizing equipment. The technique sheets shall include indication of review by an independent Level III examiner not an employee of the vendor.

5) No-Load Test

a) Hoist: Raise the load hook the full operating lift distance and verify satisfactory operation of hoist, upper limit switch, lower limit switch, and the hoisting and lowering speeds. Operate the hoist at all available speeds in both directions.

b) Hoist/Trolley: Operate hoist/trolley assembly the full length of the monorail or crane bridge in both directions. Operate hoist/trolley at all available speeds in each direction. Verify satisfactory operation and verify trolley speed. Operate all monorail and crane bridge end switches.

c) Crane: Operate crane assembly the full length of the crane runway in both directions. Operate crane at low and high speed in each direction. Verify satisfactory operation and verify crane bridge speeds are provided as specified. Operate all crane bridge end switches.

6) Load Test – Test at 125 Percent (plus 5 percent minus 0) of rated capacity

a) Hoist Static Test: Raise test load approximately 12 inches (300 mm) above the floor and hold for 10 minutes. Observe load lowering that may occur which will indicate malfunction of hoisting component or brake. Lower the test load to the floor until the hoist line is slack.

b) Hoist Dynamic Test: Raise the test load to approximately 5 feet (1.5 meters) above the floor using all available speed points in the process. Lower the load back to the floor using all speed points. Stop the test load at least once while lowering at highest speed and observe proper brake operation. Repeat the above cycle for at least 15 minutes.

7) Load Brake Test: Raise test load approximately 5 feet (1.5 meters). With the hoist controller in the neutral position, release the holding brake. Document the method used to release the holding brake." Brake release method must be recorded to enable repeating that method during later periodic load testing by the owner. The load brake shall stop the test load.

8) Loss of Power Test: Raise the test load approximately 3 feet (900 mm) and while lowering test load, cut main power to hoist. Load should stop.

9) Hoist/Trolley Test: With test load hoisted to a height of 12 inches (300 mm) above the floor, operate trolley the full distance of the monorail in both directions using both speed points in the process. Observe for any malfunctioning of the trolley assembly on crane bridge or monorail. Operate all crane bridge or monorail end rail switches.

10) Crane: With test load hoisted to a height of 12 inches (300 mm) operate crane assembly the full length of the crane runway in both directions. Operate crane at low and high speed in each direction. Verify satisfactory operation and verify crane bridge speeds are provided as specified. Operate all crane bridge end switches.

11) Rated Load Speed Test - With the hoist/trolley loaded to rated capacity, raise and lower the load verifying that the hoisting and lowering speeds are provided as specified.

With the hoist loaded to rated capacity, operate hoist/trolley along the crane bridge and monorail, verifying that the hoist/trolley speed is provided as specified. Further, verify that the hoist/trolley stops in each direction within a distance (in feet) equal to 10 percent of rated capacity high speed (in feet per minute) when initially traveling at high speed and carrying the rated capacity load. Record voltage, amperage, hoisting and lowering speeds, hoist/trolley travel speed, and motor speed for each motor.

With the hoist loaded to rated capacity, operate crane along the crane bridge runway verifying that the crane speed is provided as specified. Further verify that the crane stops in each direction within a distance (in feet) equal to 10 percent of rated capacity high speed (in feet per minute) when initially traveling at high speed and carrying the rated capacity load. Record voltage, amperage, crane travel speed, and motor speed for each motor.

D10 1.3 DESIGN SUBMITTALS

Design Submittals shall be in accordance with Z10, *General Performance Technical Specifications*, UFGS section 01 33 10.05 20, *Design Submittal Procedures*, UFC 1-300-09N, *Design Procedures*, UFC 3-100-10N, *Architecture* and UFC 3-301-01, *Structural Engineering*.

D10 1.4 CONSTRUCTION SUBMITTALS

Submit construction submittals in accordance with PTS section Z10, *General Performance Technical Specifications*. In addition to the Z10 requirements, the Designer of Record (DOR) shall approve the following construction

submittals as a minimum:

a. Shop Drawings for Vertical Transportation Equipment (VTE)

1) Elevator Construction Submittals:

In addition to the submittal requirements of ASME A17.1, provide the following submittals:

Detail drawings must include dimensioned layouts in plan and elevation showing the arrangement of elevator equipment, accessories, supporting systems, anchorage of equipment, clearances for maintenance and operation; and details on hoistway, doors and frames, operation and signal stations, controllers, motors, guide rails and brackets, and points of interface with normal power, fire alarm system, HVAC or exhaust systems, and interface with emergency power systems. Drawings shall show any revised building electrical system required to make supplied elevator system function as specified. Drawings shall contain complete wiring diagrams showing electrical connections and other details required to demonstrate sequence of operations and functions of system devices. Drawings shall include the appropriate sizing of electrical protective devices, which are frequently different from National Electrical Code standard sizes.
Submit one set of wiring diagrams in plastic or glass cover, framed and mounted in elevator machine room. Deliver other sets to Contracting Officer. Coded diagrams are not acceptable unless adequately identified.

2) Construction Submittals for OMSI:

Submit final submittals for OMSI Manual. After approval by the DOR and sign-offs by the elevator inspector, assimilate construction submittals into the OMSI manuals required under Section 01 78 24.05 20, *Facility Operation and Maintenance Support Information*.

b. Construction Submittals for Weight Handling Equipment (WHE):

1) Submit to DOR drawings showing the general arrangement of the track beam system, including curves and switches, clearances, principal dimensions, details of structural connections, and all component details. Other items to be submitted for review and approval include electrical one-line diagrams, and catalog cuts for all major components. General arrangements shall show clearances between crane structure and building interferences and maximum crane wheel loads. Manufacturer's catalog data will suffice for items of standard manufacturer.

2) Construction Submittals for OMSI:

Submit final submittals for OMSI Manual. After approval by the DOR, assimilate construction submittals into the OMSI manuals required under Section 01 78 24.05 20, *Facility Operation and Maintenance Support Information*.

c. Field Test Reports

D1020 WEIGHT HANDLING EQUIPMENT

D1020 1.1 BASIC REQUIREMENTS FOR CRANES OR MONORAILS WITH HOISTS/TROLLEYS

D1020 1.1.1 Safety

Comply with the mandatory and advisory safety requirements of ASME B30.11 ASME B30.16 and ASME B30.17.

D1020 1.1.2 Hoist Load Chain or Wire Rope

High strength welded steel links for chain or uncoated XIP or XXIP, 6x37, IWRC per ASTM 1023/A for wire rope;; minimum safety factor of 5 to 1 based on ratio of minimum chain or wire rope breaking load to the calculated load on the chain or wire rope when the hoist is assumed loaded to rated capacity. Certification from hoist manufacturer of provided chain's or wire rope's breaking strength shall be submitted to Contracting Officer and approved prior to final acceptance of hoist. Do not paint or coat the load chain or wire rope. Wedge sockets are not permitted as terminal fittings on wire rope.

D1020 1.1.3 Load Block And Hook

Construct load blocks of steel. Provide forged steel, swivel type hook, with hook nut keyed to hook shank by means of a setscrew installed in a plane parallel to the longitudinal axis of the hook shank, or other similar easily removable securing device. Hook throat opening shall be sized for users needs. Provide hook with spring loaded steel safety latch for closing the hook throat opening. The hook and hook nut shall not be painted or coated. Permanently mark hook and hook nut with an identification number.

D1020 1.1.4 Bearings

All bearings except those subject to a small rocker motion shall be anti-friction type. Bearings not considered lifetime lubricated by the manufacturer shall be provided with a means for lubrication.

D1020 1.1.5 Painting of System

Provide manufacturer's standard painting or shop painting of components specified in this section; Do not paint, coat, or galvanize the following surfaces: load chain, load hook,load hook nut, load chain sheave, wire rope contact areas of sheaves, trolley and travel wheel treads, load bearing surfaces of travel rails and runway beams.

D102002 OVERHEAD CRANES

D102002 1.1 TOPRUNNING MULTIPLE GIRDER CRANE

Provide an electric powered top running multiple girder crane system with electric powered hoist and trolley complete, tested and ready for operation. Crane, hoist, trolley, equipment, materials, installation, examination, inspection, and workmanship shall meet the applicable requirements of NFPA 70 and CMAA 70, Class C minimum, as modified and supplemented by this specification. Reference in these publications to the "authority having jurisdiction" shall be interpreted to mean the "Contracting Officer."

a. Runway Track System - Provide runway track system on the structural supports indicated on the drawings. The track system shall be the sole responsibility of the runway track supplier. However, design shall be subject to the requirements specified herein.
b. Cataloged Products - If possible, provide runway track manufacturer's standard cataloged devices for connection of the track to the indicated supporting structures. If runway track manufacturer's cataloged devices are not provided for this suspension system, complete shop drawings and calculations for any custom connection device shall be submitted for review and approval by the Contracting Officer.
c. Design - The runway system shall be designed and constructed to ensure no impairment of the strength of track or the structural support. A connection device, recommended by the manufacturer of the runway

system, shall be located at each track splice joint. Provide bracing to hold track sections in rigid alignment at all joints.

d. Hoist and Trolley - Provide bridge girders, hoist and trolley in compliance with CMAA 70 Class C minimum, requirements as modified and supplemented by this RFP.

e. Crane Basic Requirements - Provide the crane basic components, crane installation, and field testing specified in the requirements below.

f. Electrification – Runway track beam electrification for crane shall be of the flat festooned type or enclosed safety bar type (see project program) with four continuous copper conductors. Provide electrical work in accordance with Section D50, Electrical. Dual, fully redundant, collector shoes shall be provided for enclosed bar type conductor systems.

g. Power Supply - Power supply emergency shut-off devices, dedicated only to crane hoist and trolley, shall be readily accessible from the floor, and located within proximity to the crane runway track system.

h. Identification Plates - Provide identification plates of noncorrosive metal. Information and data on the plates shall include, in clearly legible permanent lettering, the manufacturer's name, model number, unique item serial number, capacity rating, and other essential information. In addition, the crane system shall be furnished with identification plates showing the capacity of the system, which shall be legible from the floor and from either side of the crane.

D102002 1.2 UNDERRUNNING SINGLE GIRDER CRANE

Provide an electric powered underrunning crane system with electric powered hoist and trolley complete, tested and ready for operation. Crane, hoist, trolley, equipment, materials, installation, examination, inspection, and workmanship shall be in accordance with the applicable requirements of NFPA 70, and MH27.1, Duty Class C, as modified and supplemented by this specification. Crane girder and runway tracks shall be patented track. Reference in these publications to the "authority having jurisdiction" shall be interpreted to mean the "Contracting Officer."

a. Patented Track - Provide specially designed trackage in accordance with MH27.1 Duty Class C, e.g., patented track beam, curves, and switches constructed from welded steel components. The lower flange of the track section shall have minimum lower flange width of 3.25 inches (82 mm); chemical composition of 0.45 to 0.60 percent carbon content, 0.60 to 1.1 percent manganese content; and wheel treads shall be hardened to a minimum Brinell Hardness Number of 195. Upper flange and wheel tread contact areas shall be steel, continuously welded together or provided as one monolithic piece.

b. Track Suspension - Provide means of suspending the monorail track system, including curves and switches from the structural supports indicated on the drawings. The suspension system shall be the sole responsibility of the track supplier; however, design shall be subject to the requirements specified herein.

c. Cataloged Products - If possible, provide track manufacturer's standard cataloged devices for connection of the track to the indicated supporting structures. If track manufacturer's cataloged devices are not provided for this suspension system, complete shop drawings and calculations for each custom suspension device shall be submitted for review and approval by the DOR.

d. Design - The suspension system shall be designed and constructed to ensure no impairment of the strength of track or the structural support. A hanger or suspension shall be located at each track splice joint. Provide bracing to hold track sections in rigid alignment at all joints.

e. Sway Bracing - Track shall be braced laterally and longitudinally to prevent sway.

f. Lock Nuts - Where the track is suspended from hanger rods, lock nuts or other means shall be provided to prevent the nuts from backing off

the rods.

g. Hoist and Trolley - Provide electric, air-powered, or manual hoist and trolley in compliance with requirements specified below in paragraph D102003 1.2 ELECTRIC POWERED HOISTS WITH TROLLEY.

h. Crane Basic Requirements - Provide the crane basic components, crane installation, and field testing specified in the requirements below.

i. Electrification – Runway track beam electrification for crane shall be of the flat festooned type or enclosed safety bar type with four copper conductors. Provide electrical work in accordance with Section D50, Electrical.

j. Power Supply - Power supply emergency shut-offs devices for monorail hoist and trolley shall be readily accessible from the floor, and located within proximity to the monorail runway track system.

k. Identification Plates - Provide identification plates of noncorrosive metal. Information and data on the plates shall include, in clearly legible permanent lettering, the manufacturer's name, model number, capacity rating, and other essential information. In addition, the crane system shall be furnished with identification plates showing the capacity of the system, which shall be legible from the floor and from either side of the crane.

D102003 MONORAILS

D102003 1.1 MONORAIL TRACK BEAM SYSTEM WITH HOIST(S) AND TROLLEY(S)

D102003 1.1.1 Drawings and Design Data

a. Drawings: Monorail System - Show the general arrangement of all components, clearances and principal dimensions, assemblies of track, track suspension system, and electrical schematic drawings.

b. Design Data: Load and Sizing Calculations - Submit calculations verifying the sizing of any track, track suspension device and additional supports, which are not the monorail system manufacturer's standard cataloged product.

When there is one hoist on one monorail system, the monorail system rated capacity and the hoist rated capacity will be equal. When there is more than one hoist on the monorail system, the rated capacity of the monorail track beam system shall be designed equal to the sum of the two hoists rated capacities. An exception to this is that if the two hoists are separated by positive track beam stops and distance so that the track beam is strength-wise essentially two independent track beam systems.

c. Requirements for the following system components are specified in paragraph D102002 UNDERRUNNING SINGLE GIRDER CRANE (1.2):

Patented Track
Track Suspension
Cataloged Products
System Design
Sway Bracing
Lock Nuts
Electrification
Power Supply
Identification Plates

d. Suspension of Curves and Switches - Provide steel framing (structural supports), in addition to that indicated, as required by monorail curve and switch manufacturer to support curves and switches. The additional steel framing shall be the sole responsibility of the monorail supplier. Submit shop drawings and framing design calculations to the Contracting Officer for approval.

D102003 1.2 ELECTRIC POWERED HOIST(S) WITH TROLLEY(S)

D102003 1.2.1 Capacity

The monorail or underruning crane system shall have a minimum rated capacity to be established by the project program. Mark the hoist capacity in pounds on both sides of the hoist or load block.

D102003 1.2.2 Speeds

The hoist shall have [an] operating speed[s] and a rated load capacity as required by the project program. The trolley shall have [an] operating speed[s] as required by the project program.

D102003 1.2.3 Electric Wire Rope Hoist

ASME HST-4M, Class H3, except as modified and supplemented by this RFP. Hoist shall be double reeved.

Rope lengths shall be sufficient to maintain a minimum of two full wraps of rope at the dead end(s) of the drum, with the block in its lowest indicated position.

The hoist shall have geared upper and lower limit switches. Geared limit switches shall allow operation of the hoist in the reverse direction to back out of the limit without resetting the hoist. There shall also be a block activated mechanical extreme upper limit switch that removes power from the motor and brake independent of the drive controller. A three-position keyed switch shall be provided to allow bypassing of the limits. One position shall allow bypassing of the geared upper limit. Another position shall reset the block activated upper limit switch. Hoists shall have an overload limiting device adjustable between 80% and 150% of hoist capacity. Slip clutches or other friction devices are not allowed.

D102003 1.2.4 Electric Chain Hoist

ASME HST-1, Class H3, except as modified herein and supplemented by this RFP. Provide load chain proof test.

Chain hoists of 10 foot (3 meters) lift or more shall be equipped with a load chain bucket.

Hoist shall have stops to prevent contact between the hook block and the body of the hoist. The hoist shall have an overload limiting device.

D102003 1.2.5 Brakes

Provide hoist with an electro-mechanical holding brake and a mechanical load brake, each capable of holding 130 percent of the rated hoist capacity. Hoist holding brake shall be capable of being released to test the load brake. The contractor shall provide instructions on how to release the brake in his construction submittal documentation.

Provide trolley with an electro-mechanical braking means for breaking of trolley travel.

D102003 1.2.6 Pendant Pushbutton Station

Hoist and trolley shall be controlled from a pendant pushbutton station. Arrange pushbuttons in accordance with ASME B30.11 recommendations. Locate station 4 feet (1.2 meters) above the finished floor. The pendant shall include an On/Off button that removes power from the motors, brakes and controls. Directional contactors shall have both mechanical and electrical interlocks.

D102003 1.2.7 Identification Plates

Provide identification plates of noncorrosive metal with clearly legible permanent lettering giving the manufacturer's name, model number, capacity in pounds, and other essential information or identification.

D102003 1.3 MANUAL HOIST WITH TROLLEY

D102003 1.3.1 Fabrication And Construction

Provide manual hoist and trolley, ASME HST-2, ASME HST-3, trolley suspension. Trolley and wheels shall be suitable for operation on the steel monorail track beam provided, and shall have not less than four wheels.

D102003 1.3.2 Capacity

The hoist shall have a minimum rated capacity of as required by the project program. The monorail system shall have a minimum rated capacity as required by the project program.

D102003 1.3.3 Hook Operating Lift Range

The hoist lift highest and lowest points shall be as required by the project program.

D102003 1.3.4 Trolley

Shall be designed to operate from the track beam section provided. Where two or more hoists are located on the same monorail beam, the trolleys shall be equipped with rubber bumper devices designed to prevent contact of any part or parts of the hoists.

D1030 ESCALATORS AND MOVING WALKS

Comply with ASME A17.1 and ASME A17.2.

D103001 ESCALATORS

Comply with ASME A17.1 and ASME A17.2.

D103002 MOVING WALKS

Comply with ASME A17.1 and ASME A17.2.

D1090 OTHER CONVEYING SYSTEMS

D109002 CONVEYORS

Comply with ASME B20.1, *Safety Standards for Conveyors and Related Equipment*.

D109090 OTHER MATERIAL HANDLING SYSTEMS

-- End of Section --

SECTION D20

PLUMBING
11/10

D20 GENERAL

RFP Part 3 including the Engineering System Requirements (ESR) provide project specific requirements. The RFP Part 4 Performance Technical Sections (PTS) provide generalized technical requirements that apply to multiple facility types and include more requirements than are applicable to this project. Therefore RFP Part 4 requirements that correspond and further define the RFP Part 3 requirements are specific to this project, other RFP Part 4 requirements are not required.

D20 1.1 NARRATIVE

This section must be used in conjunction with all parts of the Design Build (D/B) Request for Proposal (RFP) to determine the full requirements of this solicitation.

This section includes the construction of interior plumbing systems. This section covers installations inside the facility and out to the five foot line. See Section G30, *Site Mechanical Utilities*, for continuation of systems beyond the five foot line.

D20 1.2 PLUMBING DESIGN GUIDANCE

Provide the design and installation in accordance with the following references. This Performance Technical Specification (PTS) adds clarification to the fundamental requirements contained in the following Government Standards. The general requirements of this PTS section are located in PTS Section Z10, *General Performance Technical Specification*.

D20 1.2.1 Government Standards

Federal Energy Management Program (FEMP)

UNIFIED FACILITIES CRITERIA (UFC)

UFC 1-200-01	General Building Requirements(A reference in this PTS section to UFC 1-200-01 requires compliance with the Tri-Service Core UFCs that are listed in UFGS Section 01 33 10.05 20, which includes the following significant UFC(s):UFC 3-400-10N, Mechanical EngineeringUFC 3-420-01, Design: Plumbing Systems)

D20 1.3 DESIGN SUBMITTALS

Design Submittals shall be in accordance with Z10, *General Performance Technical Specifications*, UFGS section 01 33 10.05 20, *Design Submittal Procedures*, UFC 1-300-09N, *Design Procedures* and UFC 3-400-10N, *Mechanical Engineering*.

D20 1.4 CONSTRUCTION SUBMITTALS

Submit construction submittals in accordance with PTS section Z10, *General Performance Technical Specifications*. In addition to the Z10 requirements, the Designer of Record (DOR) shall approve the following construction submittals as a minimum:

Fixtures, equipment, and OMSI information for all equipment and fixtures.

D2010 PLUMBING FIXTURES

Plumbing fixtures shall be provided in accordance with the IBC, IPC, and as specified.

D201001 WATER CLOSETS

D201001 1.1 FLUSH VALVE WATER CLOSETS

ASME A112.19.2, white vitreous china, siphon jet. Provide ASME A112.19.5 trim. Provide self-closing metering type flush valve, unless electronic flush control is specified in the ESR Section D20. Electronic flush control shall conform to UL 1951 and ASSE 1037. Flush valve shall not exceed 1.28 GPF (4.8 LPF). Handicapped fixture mounting height and appurtenances shall be in accordance with UFAS and ADAAG.

D201002 URINALS

D201002 1.1 FLUSH VALVE URINALS

ASME A112.19.2, white vitreous china, wall-mounted, wall outlet, siphon jet, integral trap, extended side shields. Provide large diaphragm (not less than 2.625 inches (66 mm) upper chamber inside diameter at the point where the diaphragm is sealed between the upper and lower chambers) flush valve of chrome plated cast brass conforming to ASTM B 584, including vacuum breaker and angle (control-stop) valve. Maximum flush valve volume per flush shall not exceed 0.5 gallons per flush (1.9 lpf). Provide ASME A112.19.5 trim and ASME 112.6.1M concealed chair carriers. Provide self-closing metering type flush valve, unless electronic flush control is specified in the ESR Section D20. Electronic flush control shall conform to UL 1951 and ASSE 1037.Handicapped fixture mounting height and appurtenances shall be in accordance with UFAS and ADAAG.

D201003 LAVATORIES

D201003 1.1 COUNTERTOP LAVATORIES

Unless integral bowl is specified elsewhere, lavatories shall be white, ASME A112.19.2 vitreous china lavatories with minimum dimensions of 20 inches (508 mm) wide x 18 inches (457 mm) front to rear, and self-rimming type. Provide ASME 112.18.1 copper alloy center set faucets unless self closing metering or electronic control is specified in ESR section D20. Provide with aerator, adjustable P-traps, and perforated grid strainers, unless pop-up drain fittings are specified in ESR section D20.

D201003 1.3 HANDICAPPED LAVATORIES

Same as Paragraphs 1.1, except height and appurtenances shall be in accordance with UFAS and ADAAG.

D201004 SINKS

D201004 1.1 COUNTERTOP SINKS

ASME A112.19.3 sink, 20 gage stainless steel with integral mounting rim, minimum dimensions of 33 inches (840 mm) wide for two compartment or 21 inches (560 mm) wide for one compartment by 21 inches (560 mm) front to rear, with ledge back and undersides coated with sound dampening material. Provide top-mounted ASME A112.18.1 copper alloy faucets, swing spout with aerator, and stainless steel drain outlets with cup strainers. Provide adjustable P-trap with drain piping to vertical vent stack. If specified in ESR section D20, provide UL 430 waste disposer unit in right compartment.

D201004 1.2 SERVICE SINKS

ASME A112.19.1, white enameled cast-iron or ASME A112.19.2 white vitreous china, wall mounted and floor supported by wall outlet cast-iron P-trap, minimum dimensions of 22 inches (560 mm) wide by 18 inches (457 mm) front to rear with 9 inch (230 mm) splash-back, and stainless steel rim guard. Provide ASME A112.18.1 copper alloy back-mounted combination faucets with vacuum breaker and 0.75 inch (20 mm) external hose threads.

D201004 1.3 MOP SINKS

Pre-cast terrazzo floor-mounted mop sink, 36 inches x 36 inches x 12 inches (914 mm x 914 mm x 305 mm) shall be made of marble chips cast in white Portland cement to a compressive strength of not less than 3625 PSI (25 mPa) 7 days after casting. Provide brass body drains with nickel bronze strainers cast integral with terrazzo. Provide stainless steel rim guard for mop sink. Provide chrome-plated exposed hot and cold water faucets ASME A112.18.1 wall-mounted copper alloy faucets swing spout with 3/4 inch (20 mm) hose connection, vacuum breaker, and pail hook. Provide mop hanger on wall above sink suitable for four mops.

D201006 DRINKING FOUNTAINS AND COOLERS

D201006 1.1 DRINKING FOUNTAINS

Wall mounted drinking fountain shall be constructed of white enameled cast iron with bubbler and push button control. Handicapped fixture mounting height and appurtenances shall be in accordance with UFAS and ADAAG.

D201006 1.2 ELECTRIC WATER COOLERS

AHRI 1010, wall-mounted, bubbler style, air-cooled condensing unit, 4.0 gph (4.20 mL per second) minimum capacity, stainless steel splash receptor, double wall heat exchanger, and all stainless steel cabinet. Provide ASME A112.6.1M concealed wall hangers with thru-bolts and back plates. Handicapped fixture mounting height and appurtenances shall be in accordance with UFAS and ADAAG.

D201090 EMERGENCY FIXTURES

Pressure-compensated tempering valve is required for emergency fixtures, with leaving water temperature set point adjustable throughout the range 60 to 95 degrees F (15.5 and 35 degrees C) unless cold water supply meets temperature criteria.

Where indicated in ESR section D20, provide packaged, UL listed, alarm system; including an amber strobe lamp, horn with externally adjustable loudness and horn silencing switch, mounting hardware, and water flow switch, assembled and prewired for waterproof service within NEMA Type 3 or 4 enclosures or for explosion proof service within NEMA Type 7 or 9 enclosures.

D201090 1.1 EMERGENCY SHOWER

ISEA Z358.1, wall-mounted self-cleaning, non-clogging 10 inch (250 mm)

diameter stainless steel deluge shower head with elbow, one inch (25 mm) full-flow stay-open ball valve with pull rod and 8 inch (200 mm) diameter ring or triangular handle, one inch (25 mm) interconnecting fittings.

D201090 1.2 EMERGENCY EYE & FACE WASH

ISEA Z358.1, wall-mounted self-cleaning, non-clogging eye and face wash with quick opening, full-flow valves, stainless steel eye and face wash receptor. Provide copper alloy control valves.

D201090 1.3 COMBINATION EMERGENCY SHOWER & EYEWASH

ISEA Z358.1, column mounted on a floor flange. Design combination unit so components can be operated individually from a common fixture supply line. Provide a self-cleaning, non-clogging 10 inch (250 mm) diameter stainless steel deluge shower head with elbow, full flow stay-open ball valve with pull rod and 8 inch (200 mm) diameter ring or triangular handle one inch (25 mm) interconnecting fittings. Provide a self-cleaning, non-clogging eye and face wash with quick opening, full-flow valves, stainless steel eye and face wash receptor. Provide copper alloy control valves.

D2020 DOMESTIC WATER DISTRIBUTION

D202001 PIPES & FITTINGS

D202001 1.1 COPPER

Use copper tubing and fittings for pipe sizes 4 inches (100 mm) or smaller. Use type L tubing above ground with either solder fittings, or press-on copper fittings. For buried piping, use type K tubing with either solder fittings, or press-on copper fittings.

D202002 VALVES & HYDRANTS

D202002 1.1 VALVES

Provide valves at water supplies to fixtures and to provide ease of maintenance as required in the IPC.

D202002 1.2 HOSE BIBBS & HYDRANTS

Use non-freeze wall hydrants where the winter design temperature is at or below freezing. Hose bibbs are acceptable for use elsewhere.

D202002 1.2.1 Hose bibbs

Angle type, copper alloy hose bibbs with vacuum breaker.

D202003 DOMESTIC WATER EQUIPMENT

D202003 1.1 BACKFLOW PREVENTERS

Furnish proof that each make, model/design, and size of backflow preventer being furnished for the project is approved by and has a current "Certificate of Approval" from the Foundation for Cross-Connection Control and Hydraulic Research (FCCCHR)-USC. Listing of the particular make, model/design, and size in the current FCCCHR-USC will be acceptable as the required proof. Provide freeze protection for aboveground exterior applications in areas where the winter design temperature is at or below freezing.

D202003 1.2 WATER HEATERS

D202003 1.2.1 Instantaneous Water Heater (Electric)

UL 499, heater(s) shall be of the modulating, under the sink, point-of-use type. Output temperature shall be adjustable from 40

D202003 1.3 WATER METERS

AWWA C701 turbine type, with register reading in liters and U.S. gallons.

D202004 INSULATION & IDENTIFICATION

D202004 1.1 PIPING INSULATION

Mineral fiber insulation on domestic hot water supply and recirculation piping. Insulate domestic cold water piping with cellular glass insulation (ASTM C 552, Type II, and Type III) or polyisocyanurate insulation (ASTM C 591, type I).

D202004 1.2 PIPING & EQUIPMENT IDENTIFICATION

In addition to the requirements in Section Z10, *General Performance Technical Specification*, provide laminated plastic nameplates for valves. Stop valves in supplies to fixtures will not require nameplates. Identify above ground pipe with the type of service and direction of flow. Letter size, lengths and colors shall be per ANSI A13.1.

D202005 SPECIALTIES

D202005 1.1 VALVE BOXES

For each buried valve provide cast-iron, ductile-iron box of a suitable size. Provide cast-iron or ductile-iron cover for the box with the word "WATER" cast on the cover.

D202005 1.2 WATER HAMMER ARRESTORS

PDI WH 201, water hammer arrestors in lieu of air chambers.

D202005 1.3 ICEMAKER CONNECTOR BOX

Recessed wall box fabricated of PVC plastic. Provide bronze shut-off valve.

D202090 OTHER DOMESTIC WATER SUPPLY

D202090 1.1 SUPPORTS

Provide piping supports in accordance with the IPC.

D202090 1.2 INSPECTIONS

Prior to initial operation, inspect piping system for compliance with drawings, specifications, and manufacturer's submittals.

D202090 1.3 DISINFECTION

Upon completion of the installation, disinfect all systems per the IPC.

D202090 1.4 PLUMBING SYSTEMS TESTING

Upon completion of the installation test all systems per the IPC.

D2030 SANITARY WASTE

D203001 WASTE PIPE & FITTINGS

D203001 1.1 PIPING AND FITTINGS

Cast iron hub and spigot pipe and fittings, rubber compression gasket joints or cast-iron hubless pipe and fittings, CISPI 301 with CISPI 310 couplings. Where indicated in ESR Section D20, plastic PVC or ABS piping, fittings, and solvent cement per ASTM D 2665 or ASTM D 2661 may be provided. Plastic piping shall be equipped with approved fire-stopping devices as required by code.

D203001 1.2 CLEANOUTS

Provide cleanouts as required by the IPC. Material shall be consistent with the piping system materials.

D203002 VENT PIPE & FITTINGS

Cast-iron hubless pipe and fittings, CISPI 301 with CISPI 310 couplings. Where indicated in ESR Section D20, plastic PVC or ABS piping, fittings, and solvent cement per ASTM D 2665 or ASTM D 2661. PVC piping shall be equipped with approved firestopping devices as required by code. Single drainage/vent stack systems (such as Philadelphia system) and mechanical air admittance valves are not acceptable.

D203003 FLOOR DRAINS

Floor drains shall be flush strainer or extended rim type as required by the IPC. Provide in mechanical rooms, restrooms, fire pump room, laundry room, and plumbing chase areas. Provide floor sinks in kitchens. Provide floor sinks where required for interior air handling unit condensate drains.

D203004 SANITARY & VENT EQUIPMENT

D2040 RAIN WATER DRAINAGE

D204001 PIPE & FITTINGS

Cast iron hubless pipe and fittings, CISPI 301 with CISPI 310 couplings. Where indicated in ESR Section D20, plastic PVC or ABS piping, fittings, and solvent cement per ASTM D 2665 or ASTM D 2661 may be used. PVC piping shall be equipped with approved fire-stopping devices as required by code. Size and install piping in accordance with the IPC.

D204002 ROOF DRAINS

Roof drains shall conform to ASME A112.6.4, with dome and integral flange, and shall have a device for making a watertight connection between roofing and flashing.

D204004 INSULATION & IDENTIFICATION

Mineral fiber insulation on all drainage piping that may be subject to condensation. Provide a vapor retarder.

D2090 OTHER PLUMBING SYSTEMS

-- End of Section --

SECTION D30

HVAC
11/10

D30 GENERAL

RFP Part 3 including the Engineering System Requirements (ESR) provide project specific requirements. The RFP Part 4 Performance Technical Sections (PTS) provide generalized technical requirements that apply to multiple facility types and include more requirements than are applicable to this project. Therefore RFP Part 4 requirements that correspond and further define the RFP Part 3 requirements are specific to this project, other RFP Part 4 requirements are not required.

D30 1.1 NARRATIVE

This section includes the construction of interior mechanical systems. This section covers installations inside the facility and out to the five foot line. See Section G30, *Site Civil/Mechanical Utilities*, for continuation of systems beyond the five-foot line.

D30 1.2 MECHANICAL DESIGN GUIDANCE

Provide the design and installation in accordance with the following references. This Performance Technical Specification (PTS) adds clarification to the fundamental requirements contained in the following Government Standards. The general requirements of this PTS section are located in PTS Section Z10, *General Performance Technical Specification*.

D30 1.2.1 Government Standards

Federal Energy Management Program (FEMP)

UNIFIED FACILITIES CRITERIA (UFC)

UFC 1-200-01	General Building Requirements(A reference in this PTS section to UFC 1-200-01 requires compliance with the Tri-Service Core UFCs that are listed in UFGS Section 01 33 10.05 20, which includes the following significant UFC(s):UFC 3-400-10N, Mechanical Engineering UFC 3-420-01, Plumbing Systems)
UFC 3-440-04N	Solar Heating of Buildings and Domestic Hot Water

UNIFIED FACILITIES GUIDE SPECIFICATIONS (UFGS)

UFGS 01 78 24.05 20	Facility Operation and Maintenance Support Information
UFGS 23 05 93	Testing, Adjusting, and Balancing for HVAC
UFGS 23 09 23.13 20	BACNET Direct Digital Control Systems for HVAC

UFGS 23 81 23.00 20 Computer Room Air Conditioning Units

D30 1.3 PERFORMANCE VERIFICATION AND ACCEPTANCE TESTING

a. Verification of satisfactory HVAC system performance shall be via Performance Verification Testing, as detailed in this section.
b. The Government reserves the right to witness all Acceptance Tests and Inspections, review data, and request other such additional inspections and repeat tests as necessary to ensure that the system and provided services conform to the stated requirements.
c. The Qualified Testing Organization shall provide the Acceptance Tests and Inspections test plan and perform the acceptance tests and inspections. Test methods, procedures, and test values shall be performed and evaluated in accordance with appropriate standards, and the manufacturer's recommendations. Equipment shall be placed in service only after completion of required tests and evaluation of the test results have been completed. Contractor shall supply to the testing organization complete sets of shop drawings, settings of adjustable devices, and other information necessary for an accurate test and inspection of the system prior to the performance of any final testing. Perform acceptance tests and inspections on Computer Room Air Conditioning Units, Direct Digital Control System, and HVAC Testing/Adjusting/Balancing.

D30 1.4 HVAC COMMISSIONING

Commission the HVAC systems per the Commissioning Plan as required by UFGS Specification Section 01 45 00.05 20, *Design & Construction Quality Control*. HVAC system commissioning shall coordinate with and incorporate the testing, reporting, training & O&M documentation requirements of UFGS 23 05 93, *Testing, Adjusting, and Balancing for HVAC*and UFGS 23 09 23.13 20, *BACnet Direct Digital Control Systems for HVAC*.

D30 1.5 DESIGN SUBMITTALS

Design Submittals shall be in accordance with Z10, *General Performance Technical Specifications*, UFGS section 01 33 10.05 20, *Design Submittal Procedures*, UFC 1-300-09N, *Design Procedures*, and UFC 3-400-10N, *Mechanical Engineering*.

In addition, UFGS sections listed below or in the body of the PTS text are to be used by the Designer of Record (DOR) as a part of the design submittal. If the UFGS products or systems are applicable to the project, the DOR shall edit these referenced UFGS sections and submit them as a part of the design submittal specification. Edit the specification sections in accordance with the limitations stated in PTS section Z10, *General Performance Technical Specifications*.

UFGS 01 78 24.05 20, *Facility Operation and Maintenance Support Information*

UFGS 23 09 23.13 20, *BACnet Direct Digital Control Systems for HVAC*

UFGS 23 05 93, *Testing, Adjusting, and Balancing for HVAC*

UFGS 48 14 13.00 20, *Solar Liquid Flat Plate Collectors*

D30 1.6 CONSTRUCTION SUBMITTALS

Submit construction submittals in accordance with PTS section Z10, *General Performance Technical Specifications*. In addition to the Z10 requirements, the Designer of Record (DOR) shall approve the following construction submittals as a minimum:

Solar hot water heating system fixtures and equipment, and OMSI information for all equipment and fixtures.

D30 1.7 MOTORS

Single-phase fractional-horsepower alternating-current motors shall be high efficiency types corresponding to the applications listed in NEMA MG 11. Select polyphase motors based on high efficiency characteristics relative to the applications as listed in NEMA MG 10. Additionally, all polyphase squirrel-cage medium induction motors with continuous ratings shall meet or exceed energy efficient ratings per Table 12-10 of NEMA MG 1. Provide controllers for 3-phase motors rated 1 hp (0.75 kW) and above with phase voltage monitors designed to protect motors from phase loss and over/under-voltage. Provide means to prevent automatic restart by a time adjustable restart relay. For packaged equipment, the manufacturer shall provide controllers including the required monitors and timed restart. Provide reduced voltage starters for all motors 25 hp and larger.

D303002 DIRECT EXPANSION SYSTEMS

If coatings are indicated in ESR Section D30, provide with copper tube/copper fin construction or immersion applied, baked phenolic or other approved coating that passes the 3000 hour salt spray resistance test using the ASTM B117 procedure. Field applied coatings are not acceptable.

D303002 1.1 CONDENSING UNITS

Air-cooled, split system air conditioner with ducted air distribution. Provide units factory assembled, designed, tested, and rated in accordance with AHRI 210/240 or AHRI 340/360. Provide manufacturer's minimum recommended clearance around condensing units. Refrigerant piping size shall be per the manufacturer's recommendations.

D303002 1.2 DX VARIABLE AIR VOLUME (VAV) UNITS

Direct expansion equipment shall be specifically designed and manufactured for VAV applications. The same manufacturer shall provide central air handling units, VAV boxes/zone dampers and zone controls. Airflow through the evaporator coils shall not be modulated. Provide duct mounted zone control damper units with integral control box, designed for use with DX VAV packaged systems. Self-modulating air diffusers will not be allowed.

D303002 1.3 DUCTLESS SPLIT SYSTEM

Air-cooled, ductless split system. Provide units factory assembled, designed, tested, and rated in accordance with ARI 210/240. Provide manufacturer's minimum recommended clearance around heat pump or condensing units. Refrigerant piping size shall be per the manufacturer's recommendations. Insulate refrigerant piping suction lines and condensate drain.

D3040 DISTRIBUTION SYSTEMS

D304001 AIR DISTRIBUTION, HEATING & COOLING

D304001 1.1 DUCTWORK

Except as specified herein, provide ductwork constructed, braced, reinforced, installed, supported, and sealed per SMACNA standards.

D304001 1.1.1 Flexible Ducts

Use insulated flexible duct only for connections to air distribution devices to adapt to minor offsets. Flexible duct shall be UL 181 listed and per SMACNA 1966 duct construction standards with a minimum R value of 4. Maximum length of flexible ductwork shall be 6 feet (2 meters).

D304001 1.1.2 Flexible Connections

Provide flexible connectors between fans and ducts.

D304001 1.1.3 Volume Dampers

Provide manual volume dampers in each branch take-off from the main duct to control air quantity except for primary supply ductwork on VAV systems. Dampers shall conform to SMACNA 1966 duct construction standards and shall be seal class "A" construction.

D304001 1.1.4 Fire Dampers

Fire dampers shall be rated per UL 555. Fire dampers shall be dynamic type rated for closure against a moving airstream. Provide fire dampers that do not intrude into the air stream when in the open position.

D304001 1.1.5 Smoke Dampers

Smoke dampers shall be rated per UL 555S.

D304001 1.1.6 Sound Attenuators

Fabricated attenuators that will reduce the rated sound pressure level of the fan down to at least 65 decibels in the 250 Hz (third octave band) center frequency by using a reference sound source calibrated in decibels of sound power at 10 to 12 watts. Maximum permissible pressure drop shall not exceed 0.63 inch of water (157 Pa).

D304001 1.2 LOUVERS & HOODS

D304001 1.2.1 Louvers

Louvers shall bear AMCA ratings seal for air performance and water penetration in accordance with AMCA 500L and AMCA 511. Louvers shall be constructed of anodized aluminum alloy or stainless steel. Provide birdscreens.

D304001 1.2.2 Hoods

Hoods shall be constructed of anodized aluminum alloy or stainless steel. Provide with birdscreens.

D304001 1.3 GRILLES, REGISTERS, & DIFFUSERS

Factory-finished grilles, registers, and diffusers. Exterior and exposed edges shall be rolled, or otherwise stiffened and rounded.

D304001 1.4 INSULATION

Provide external thermal insulation for all ductwork. Insulate ductwork in concealed spaces with blanket flexible mineral fiber. Insulate ductwork in Mechanical Rooms and exposed locations with rigid mineral fiber insulation.

Provide insulation with factory applied all-purpose jacket with integral vapor retarder. In exposed locations, provide a jacket with white surface suitable for painting. Flame spread/smoke developed rating for all insulation shall not exceed 25/50. Minimum insulation thickness shall be the minimum thickness required by ASHRAE 90.1. Insulate the backs of all supply air diffusers with blanket flexible mineral fiber insulation.

D304001 1.5 VAV BOXES

Pressure-independent type variable air volume units rated per AHRI 880. Boxes shall not be allowed to fully shut-off. Provide each box with a heating coil unless not required by space reheat or heating. Provide electronic controls.

D304001 1.6 VARIABLE AIR VOLUME VAV FAN-POWERED UNITS

Pressure-independent, fan powered, VAV units rated per AHRI 880 and UL listed. Provide each box with a heating coil. Provide electronic controls with speed controller, discharge volume control damper(s), and return/recirculation air frame and filter. If discharge dampers are not provided with the unit, coordinate installation with the sheet metal contractor. Insulate in accordance with ASHRAE 90.1.

D304007 EXHAUST SYSTEMS

D304007 1.1 FANS

Fans shall be AMCA 210 certified, with AMCA seal. Fan bearings shall have a minimum average life of 200,000 hours at design operating conditions. Provide bird screens for outdoor inlets and outlets. Provide direct-drive type fans with means for verifying operation via the building DDC system or with speed controllers

D304007 1.2 IN-LINE FANS

UL-Listed centrifugal fans.

D304007 1.3 WALL FANS

Propeller fans with fan guards. Provide centrifugal fans with backdraft dampers and wall bracket.

D304007 1.4 BATHROOM FANS

UL 507 and UL-listed, Home Ventilating Institute (HVI) certified and with AMCA seal for ceiling installation.

D304008 AIR HANDLING UNITS

AMCA 210 certified fans with AMCA seal. Fan bearings shall have a minimum average life of 200,000 hours at design operating conditions. Provide bird screens for outdoor inlets and outlets.

D304008 1.1 CENTRAL STATION AIR HANDLERS

Modular construction, double wall air handling units with minimum of 1 inch (25 mm) casing insulation. Provide AHRI 430 certified fans and AHRI certified coils. Provide stainless steel, positive draining condensate drain pan. For 100% outside air units provide capability for cooling, heating, dehumidification and reheat.

D304090 1.2 VARIABLE FREQUENCY DRIVES (VFD)

Factory-assembled variable frequency drive control systems for variable speed control. All air handling unit and pump VFD's shall be from the same manufacturer. Each VFD shall include motor starter, motor disconnects and controls as required for a complete system. Units shall be UL-listed and comply with the National Electric Code.

Provide the following accessories:

Disconnect switch

Control circuit transformer, with primary and secondary fuses

Manual bypass

System hand-off-auto switch with provisions for remote start/stop of the system.

System initialized light

Run light

Failure alarm

LCD digital display with numeric keypad

Provide a control interface for remote monitoring of VFD functions and alarms from the DDC control system computer.

D304090 1.3 CONDENSATE DRAIN PIPING

ASTM B 88, Type M or L, hard drawn copper.

D304090 1.4 CONDENSATE DRAIN INSULATION

Insulate condensate drain piping with flexible cellular insulation.

D304090 1.5 PIPE SLEEVES

Provide pipe sleeves at each wall and floor penetration. The sleeve shall be of a material suitable to protect the carrier pipe (two pipe sizes larger) and sealed with an appropriate flexible material. Provide fire stopping in fire rated walls in accordance with IBC.

D304090 1.6 SYSTEM FLUSHING

Thoroughly flush hydronic systems prior to system startup. Isolate coils during initial flushing until water is clear.

D306001 HVAC CONTROLS

D306001 1.1 DIRECT DIGITAL CONTROLS

Provide one of the following as directed in ESR Section D30.

a. Provide Direct Digital Controls (DDC) to comply with the requirements specified in UFGS Section 23 09 23.13 20, *BACNET Direct Digital Control Systems for HVAC*.
b. Provide a partial direct digital control (DDC) system to that will communicate with the existing DDC system. If using BACnet protocol, comply with the requirements specified in UFGS Section 23 09 23.13 20, *BACnet Direct Digital Control Systems for HVAC*. Notwithstanding any other provisions of this contract, no other product will be acceptable other than that indicated in ESR Section D30. Provide a distributed control system. Integrate all new DDC points on the existing server providing a seamless logical flow from the existing facilities to the new integrated facility.

The Designer of Record shall use UFGS Section 23 09 23.13 20 if using BACnet protocol, and submit the edited specification section as a part of the project design submittal.

Design requirements shall be in accordance with all specification notes and the BAS Owner shall be identified and designated early in the design documentation.

The system shall have stand alone digital controllers, a communication network, and a workstation computer with control software. Provide stand-alone control routines that operate without connection to the network during a loss of communication. Provide trending, scheduling and alarm tables (may be included with the sequence of operation). Provide reset routines (based on outdoor air temperature or zone demand) for hot water loop temperature setpoints and supply air static pressure control. Use alarming and trending services during performance testing or commissioning. Alarm every sequence routine when out-of-limits or control/response failure occurs. Display all graphic floor plans, equipment graphics, DDC ladder diagrams, and sequence of operations graphic pages.

All 120-volt wiring shall comply with NFPA 70. All 24-volt wiring shall comply with the IMC and terminal device manufacturer’s recommendations.

Provide training on the installed system according to the maximum training days in UFGS 23 09 23.13 20. All operator workstation functions requiring BACnet services, i.e., navigating through the graphic displays, trending, alarming and monitoring of the new controls system must be demonstrated from the existing operator workstation using only the existing application software and without the need to launch other applications or logon to other vendor applications.

D306001 1.2 ELECTRONIC CONTROLS

If required, provide programmable thermostats with built in keypads for scheduling of day and night temperatures with two setback periods per day. Provide independent summer and winter programs. Thermostats shall have temporary and manual override of schedule and battery backup.

D3070 SYSTEMS TESTING AND BALANCING

D3070 1.1 HVAC SYSTEM

Provide HVAC systems testing and balancing that complies with the requirements specified in UFGS Specification Section 23 05 93, *Testing, Adjusting, and Balancing for HVAC*. The Designer of Record shall prepare UFGS

Specification Section 23 05 93, as a part of the project specification and shall include the prepared specification section in the design submittal for the project.

D3090 OTHER HVAC SYSTEMS AND EQUIPMENT

D309001 GENERAL CONSTRUCTION ITEMS

D309001 1.1 SEISMIC DESIGN

Provide in accordance with UFC 3-400-10N, *Mechanical Engineering*.

-- End of Section --

SECTION D40

FIRE PROTECTION
11/10

D40 GENERAL

RFP Part 3 including the Engineering System Requirements (ESR) provide project specific requirements. The RFP Part 4 Performance Technical Sections (PTS) provide generalized technical requirements that apply to multiple facility types and include more requirements than are applicable to this project. Therefore RFP Part 4 requirements that correspond and further define the RFP Part 3 requirements are specific to this project, other RFP Part 4 requirements are not required.

D40 1.1 DESIGN GUIDANCE

Provide the design and installation of fire protection systems in accordance with the following references. This Performance Technical Specification (PTS) adds clarification to the fundamental requirements contained in the following Government Standards. The general requirements of this PTS section are located in PTS Section Z10, *General Performance Technical Specification.*

D40 1.1.1 Government Standards

UNIFIED FACILITIES CRITERIA (UFC)

UFC 1-200-01	General Building Requirements(A reference in this PTS section to UFC 1-200-01 requires compliance with the Tri-Service Core UFCs that are listed in UFGS Section 01 33 10.05 20, which includes the following significant UFC(s):UFC 3-600-01, Fire Protection Engineering for Facilities)
UFC 3-600-10N	Fire Protection Engineering

D40 1.2 QUALITY ASSURANCE

Materials and assemblies installed in the work shall be inspected and found to be in compliance with industry standards and these specifications prior to acceptance of the work. Items found not to be in compliance shall be removed, or corrective measures taken, to assure compliance with the referenced standard.

Qualifications, Training Plans, and Test Plans and Procedures indicated herein, shall be submitted 45 calendar days prior to the expected date of execution. Notify the Contracting Officer 14 calendar days prior to all testing. Submit test results within 7 calendar days of completion of testing.

D40 1.2.1 Qualified Workers

D40 1.2.1.1 Fire Protection Designer of Record

Services and qualifications of the FPDOR shall be as specified in UFC 3-600-01 and UFC 3-600-10N. The FPDOR shall review and approve all fire protection engineering submittals.

D40 1.2.1.2 Fire Protection Engineering Technicians

Workers required herein to be certified by the National Institute for Certification in Engineering Technologies (NICET) as an engineering technician in the Fire Protection Engineering Technology program shall be thoroughly trained and experienced, and completely familiar with the specified requirements and the methods needed for proper performance of the work in this section. All documentation required to be submitted for record and/or approval shall include the NICET engineering technician's signature, along with the technician's current NICET certification number, certification subfield, and level.

Installation drawings, shop drawings or working plans, calculations, other required pre-construction documentation and as-built drawings shall be prepared by, or under the direct supervision of a NICET engineering technician as specified in Section 6 D40 of Part 3.

D40 1.2.1.3 Qualified System Installers

Fire Suppression System and Fire Alarm System installers shall be regularly engaged in the installation of the type and complexity of system specified in the Contract documents, and shall have served in a similar capacity for at least three systems that have performed in the manner intended for a period of not less than 6 months.

Installers of Chlorinated Poly Vinyl Chloride (CPVC) sprinkler systems shall be certified by the manufacturer and maintain a copy of their certification on hand at all times.

D40 1.2.1.4 Fire Protection QC Specialist

The Fire Protection (FP) QC Specialist shall be a U.S. Registered Fire Protection Engineer (FPE) and shall be an integral part of the Prime Contractor's Quality Control Organization. This FPE shall have no business relationships (owner, partner, operating officer, distributor, salesman, or technical representative) with any fire protection equipment device manufacturers, suppliers or installers for any such equipment provided as part of this project. The Fire Protection Designer of Record (FPDOR) may serve as the FPQC Specialist provided the following qualifications are met.

a. Qualifications/Experience: The FPQC Specialist shall have obtained their professional registration by successfully completing the Fire Protection Engineering discipline examination. This FPE shall have a minimum of 5 years full time and exclusive experience in every aspect of facility design and construction as it relates to fire protection, which includes, but is not limited to, building code analysis, life safety code analysis, design of

automatic detection and suppression systems, passive fire protection design, water supply analysis, and a multi-discipline coordination reviews, and construction surveillance.

b. Area of Responsibility: The FPQC Specialist is responsible for assuring the proper construction and installation of life safety and fire protection features across all disciplines and trades. The FPQC Specialist shall be responsible for assuring that life safety and fire protection features are provided in accordance with the design documents, approved construction submittals, and manufacturer's requirements. Examples include, but are not limited to, water distribution systems including fire pumps and fire hydrants, fire resistive assemblies such as spray-applied fire proofing of structural components and fire rated walls/partitions, fire alarm and detection systems, fire suppression and standpipe systems, and emergency and exit lighting fixtures.

c. Construction Surveillance: The FPQC Specialist shall visit the construction site as necessary to ensure life safety and fire protection systems are being constructed, applied, and installed in accordance with the approved design documents, approved construction submittals, and manufacturer's requirements. Frequency and duration of the field visits are dependent upon particular system components, system complexity, and phase of construction. At a minimum, field visits shall occur just prior to installation of suspended ceiling system to inspect the integrity of passive fire protection features and fire suppression system piping, preliminary inspections of fire alarm/detection and suppression systems, and final acceptance testing of fire alarm/detection and suppression systems. The FPQC Specialist shall prepare a written report detailing compliance of any outstanding submittal review comments, summarizing the results of all tests, detailing all discrepancies discovered, corrective action taken, all forms as required by the respective NFPA codes, and recommendations/certifications for acceptance. Forward one copy of the report with attachments to the Naval Facilities Engineering Command Fire Protection Engineer.

D40 1.2.2 Performance Verification Testing

All systems shall have operational tests to demonstrate compliance with contract requirements and respective NFPA codes, International Building Code and as noted below. Test procedures shall be in full compliance with the respective NFPA codes, the equipment manufacturer recommendations, and UFC 3-600-10N. Provide all personnel, equipment, and materials for tests. Return trips to witness repeat acceptance tests due to failure of previous tests will be at the Contractor’s expense.

D40 1.2.2.1 Preliminary Inspections and Final Acceptance Testing

The FPQC Specialist shall personally witness all preliminary inspections of fire alarm/detection and suppression systems. Once preliminary inspections have been successfully completed, the FPQC Specialist shall submit a signed

certificate to the QC Manager that systems are ready for final inspection and testing. The Naval Facilities Engineering Command Fire Protection Engineer will witness formal tests and approve all systems before they are accepted. The QC Manager shall submit the request for formal inspection at least 15 days prior to the date the inspection is to take place. The QC manager shall provide 10 days advance notice to the Contracting Officer and the activity Fire Inspection Office of scheduled final inspections.

D40 1.2.2.2 Final Life Safety/Fire Protection Certification

The FPQC Specialist shall provide certification that all life safety and fire protection systems have been installed in accordance with the contract documents, approved submittals, and manufacturer's requirements. This certification shall summarize all life safety and fire protection features, and shall bear the professional seal of the FPQC Specialist.

D40 1.2.2.3 System Manufacturers Representatives

The systems manufacturer technical representative shall be present for the final inspection and test for the following systems: fire alarm and detection, fire pump, carbon dioxide, foam generating and clean agent extinguishing.

D40 1.2.2.4 Fire Suppression Water Supply and Equipment

The fire hydrants shall be inspected prior to backfilling the trench surrounding the fire hydrants. A report, including pictures, shall be provided to the Contracting Officer.

Fire pump tests shall be conducted in the presence of the pump, controller, and engine manufacturer technical representatives. The fire pump manufacturer shall also be present for the preliminary test of the fire pump system.

D40 1.2.2.5 Kitchen Hood Fire Extinguishing Systems

The kitchen hood fire extinguishing system shall contain water for the actual performance testing. The nozzles may be bagged in order to minimize damage from water spray.

D40 1.2.2.6 Spray-Applied Fire Proofing and Fire Stopping

See Section C1030 for requirements.

D40 1.2.3 Training

The contractor shall provide training for the active systems within 6 weeks of final acceptance of the systems. The training shall be scheduled at least 2 weeks in advance.

D40 1.3 DESIGN SUBMITTALS

Design Submittals shall be in accordance with Z10, *General Performance Technical Specifications*, UFGS section 01 33 10.05 20, *Design Submittal*

Procedures, UFC 1-300-09N, *Design Procedures*and UFC 3-600-10N, *Fire Protection Engineering*.

D40 1.4 CONSTRUCTION SUBMITTALS

Submit construction submittals in accordance with PTS Section Z10, *General Performance Technical Specifications*. In addition to the Z10 requirements, the Designer of Record (DOR) shall approve the following construction submittals as a minimum:

All fire protection engineering submittals including:

a. Shop Drawings. Provide shop drawings for all systems.
b. Product Data. Provide product data for all equipment.
c. Design Data. Provide design data for all system calculations.
d. Test Reports
e. Certificates

D4010 FIRE ALARM AND DETECTION SYSTEMS

D401001 FIRE ALARM DISTRIBUTION

D401001 1.1 REMOTE ANNUNCIATORS

Remote annunciators shall have a minimum 80 character alphanumeric display with alarm acknowledge, alarm silence, and reset functions.

D401001 1.2 TRANSMITTED SIGNALS

Provide the following signals to be sent to the fire alarm receiving station:

a. Sprinkler Water Flow
b. Smoke Detector
c. Manual Pull Station
d. Supervisory (i.e., valve tamper switch, fire pump loss of power, fire pump phase reversal)
e. Duct Smoke Detector
f. Fire Pump Running
g. Sleeping Room Smoke Detector

D4020 FIRE SUPPRESSION WATER SUPPLY AND EQUIPMENT

D402001 FIRE PROTECTION WATER PIPING AND EQUIPMENT

The design point of connection to the existing water supply shall require the approval of the Contracting Officer. The FP DOR shall conduct additional flow tests after contract award prior to any design submissions. Tests shall be conducted under the supervision of the Contracting Officer.

D4040 SPRINKLERS

D404001 SPRINKLERS & RELEASING DEVICES

D404001 1.1 DESCRIPTION

Areas subject to freezing shall be provided with a dry pipe system. Loading docks may be protected with dry-type sidewall sprinklers supplied by the wet-pipe system.

D404001 1.2 REQUIREMENTS

Utilize upright sprinklers with ordinary temperature rating and color to match finish in normally occupied rooms without a finished ceiling (i.e., laboratories, and other spaces with exposed ceilings).

D4090 OTHER FIRE PROTECTION SYSTEMS

D409001 CARBON DIOXIDE SYSTEMS

Supply shall include storage cylinders, racks, manifolds, beam scales, and associated equipment. Arrange the primary cylinders for automatic discharge upon activation of the main control, and the secondary cylinders for discharge both manually and upon no discharge from the primary cylinders.

D409002 FOAM GENERATING EQUIPMENT

D409002 1.1 SYSTEM CRITERIA

Foam fire protection systems shall incorporate the necessary elements for foam storage, pumping, piping, proportioning, delivery, and detection, activation and alarm systems.

D409002 1.2 SYSTEM OPERATION

Once activated, foam system(s) shall operate until shut down manually. Provide separate circuits from the releasing control panel to each zone of initiating devices. Transmission of signals from more than one zone over a common circuit is prohibited.

D409002 1.3 AFFF CONCENTRATE PUMPS

The foam concentrate pump shall be positive displacement, electric motor driven, drip proof, 240/480 volts, 60 Hz AC. System operation shall be fully automatic, with manual over-ride and manual shutdown.

D409002 1.4 FOAM CONCENTRATE STORAGE TANK

A gage or unbreakable sight glass shall permit visual determination of level of tank contents, unless liquid level is clearly visible through shell of tank.

D409002 1.5 LOW-LEVEL LOW-EXPANSION FOAM SYSTEM

D409002 1.5.1 Discharge Devices

Where used the low-level AFFF nozzle system shall utilize the Viking Grate Nozzle TM, Model GN 200 (or equivalent that is acceptable to the NAVFAC Chief Fire Protection Engineer for this use).

D409002 1.5.2 Test Header

Where used a foam system test header connection with integral gate valves shall be located at each foam system riser. Sufficient 2-1/2 inch (65 mm) male National Standard hose threads, with cap and chain, shall be installed to allow testing of the riser at the design flow rate. A wall escutcheon plate with "FOAM TEST HEADER" in raised letters cast in plate shall be installed.

D409002 1.6 AUTOMATIC WATER CONTROL VALVE ASSEMBLY (DELUGE VALVE)

Where used, the water control valve shall be an electrically actuated type. Valve shall be resettable without opening the valve. Solenoid valve shall be of the normally closed, de-energized type, which opens when energized upon receipt of an electrical signal from the releasing control panel to which it is connected. Solenoid valves used with diaphragm-type valves shall be rated for a maximum pressure differential of 175 psi (1207 kPa). Water control valves used for low-level foam systems shall be capable of recycling to the closed position at an adjustable speed. Valves located in hazardous locations shall be approved for the hazard classification of the area where located.

D409002 1.7 FOAM SYSTEM RELEASING CONTROL SYSTEM

D409002 1.7.1 Manual Releasing Stations

Where used the units shall be dual-action type located inside a clear plastic tamper cover that must be lifted prior to actuating the station. Any lettering on the cover must be "FOAM"; the words "fire" or "fire alarm" shall not appear on the cover. The station shall not require the breaking of glass to actuate. Unit shall have operating instructions clearly marked on the station cover. Unit shall be compatible with the control panel to which it is connected. Operation of a station shall result in immediate release of the foam system for that space.

D409002 1.7.2 Flame Detectors

Where used flame detectors shall operate on the infrared (IR) principle. Detector shall employ three IR sensors to provide multi-spectrum detection. Each detector shall have a manufacturer's swivel mounting bracket. Locate a permanent engraved rigid plastic or metal label at each detector with detector aiming information (degrees horizontal and vertical) for the corresponding detector.

D409002 1.7.3 Abort Switch

Where used a foam release abort switch shall be installed adjacent to each manual releasing station and at the releasing panel and be properly labeled (Minimum 1Â½ inch high lettering stating: "CONTINUOUS OPERATION OF SWITCH WILL ABORT FOAM FLOW UNTIL SYSTEM IS RESET". Switch shall be deadman type which when depressed ceases flow of foam solution (both water and foam concentrate). Upon release of the switch, the system shall return to its previous operational state. Switch and wiring shall be supervised.

D409003 CLEAN AGENT SYSTEMS

D409003 1.1 SYSTEM INSTALLATION

The system shall be supplied and installed by a factory-authorized distributor. The distributor shall be trained by the manufacturer to design, install, test, and maintain the system and shall be able to provide proof of training upon request.

D409003 1.2 RELEASING CONTROL SYSTEM

Where provided manual release stations shall be dual-action type located inside a clear plastic tamper cover that must be lifted prior to actuating the station. The words "fire" or "fire alarm" shall not appear on the cover. The station shall not require the breaking of glass to actuate. Unit shall have operating instructions clearly marked on the station cover. Unit shall be compatible with the control panel to which it is connected. Operation of a station shall result in immediate release of the clean agent system for that space.

-- End Of Section --

SECTION D50

ELECTRICAL
11/10

D50 GENERAL

RFP Part 3 including the Engineering System Requirements (ESR) provide project specific requirements. The RFP Part 4 Performance Technical Sections (PTS) provide generalized technical requirements that apply to multiple facility types and include more requirements than are applicable to this project. Therefore RFP Part 4 requirements that correspond and further define the RFP Part 3 requirements are specific to this project, other RFP Part 4 requirements are not required.

D50 1.1 NARRATIVE

This section covers installations inside the facility and out to the five foot line. See PTS Section G40, *Site Electrical*, for continuation of systems beyond the five foot line.

D50 1.2 ELECTRICAL DESIGN GUIDANCE

Provide the design and installation in accordance with the following references. This Performance Technical Specification (PTS) adds clarification to the fundamental requirements contained in the following Government Standards. The general requirements of this PTS section are located in PTS Section Z10, *General Performance Technical Specification*.

When all product Quality Control information is included in the Unified Facility Criteria (UFC) and there are requirement options identified in the ESR, then the Uniformat Level 4 titles (and possible subtitles) are included without additional verbiage. One example of this is D501090, OTHER SERVICE AND DISTRIBUTION.

D50 1.2.1 Government Publications

UNIFIED FACILITIES CRITERIA (UFC)

UFC 1-200-01	General Building Requirements(A reference in this PTS section to UFC 1-200-01 requires compliance with the Tri-Service Core UFCs that are listed in UFGS Section 01 33 10.05 20, which includes the following significant UFC(s):UFC 3-501-01, Electrical Engineering)
UFC 3-580-10	Navy and Marine Corps Intranet (NMCI) Standard Construction Practices

UNIFIED FACILITIES GUIDE SPECIFICATIONS (UFGS)

UFGS 26 23 00	Switchboards and Switchgear
UFGS 26 29 23	Variable Frequency Drive Systems Under 600 Volts

UFGS 26 32 13.00 20	Single Operation Generator Sets
UFGS 26 32 26	Motor Generator Sets, 400 Hertz
UFGS 26 33 53.00 20	Uninterruptible Power Supply (UPS)
UFGS 26 35 43	400 Hertz Solid State Frequency Converters
UFGS 26 36 23.00 20	Automatic Transfer Switches
UFGS 28 20 00.00 20	Electronic Security System (ESS), Commercial

D50 1.3 QUALITY ASSURANCE

Qualifications, certifications, and Test Plans indicated herein shall be submitted 45 calendar days prior to the expected date of execution. Notify the Contracting Officer 14 calendar days prior to all testing. Submit test results within 7 calendar days of completion of testing.

The Designer of Record is responsible for approving the submittals listed below.

D50 1.3.1 Qualified Testing Organization

Contractor shall engage the services of a qualified testing organization to provide inspection, testing, calibration, and adjustment of the electrical distribution system and equipment listed in paragraph entitled "Acceptance Tests and Inspections" herein. Organization shall be independent of the supplier, manufacturer, and installer of the equipment. The organization shall be a first tier subcontractor.

Submit name and qualifications of organization. Organization shall have been regularly engaged in the testing of electrical materials, devices, installations, and systems for a minimum of 5 years. The organization shall have a calibration program, and test instruments used shall be calibrated in accordance with NETA ATS.

Submit name and qualifications of the lead engineering technician performing the required testing services. Include a list of three comparable jobs performed by the technician with specific names and telephone numbers for reference. Testing, inspection, calibration, and adjustments shall be performed by an engineering technician, certified by NETA or the National Institute for Certification in Engineering Technologies (NICET) with a minimum of 5 years' experience inspecting, testing, and calibrating electrical distribution and generation equipment, systems, and devices.

D50 1.3.2 NEC Qualified Worker

Provide in accordance with NFPA 70. Qualified Workers shall be allowed to be assisted by helpers on a 1 to 1 ratio, provided such helpers are registered in recognized apprenticeship programs. Submit a certification confirming NEC Qualified Worker requirements.

D50 1.3.3 Qualified Telecommunications Worker

All installers assigned to the installation of telecommunications systems or any of its components shall be Building Industry Consulting Services International (BICSI) Registered Cabling Installation Technicians or have a minimum of 3 years experience in the installation of the specified copper and fiber optic cable and components. Include names and locations of two projects successfully completed using optical fiber and copper communications cabling systems. Include written certification from users that systems have performed satisfactorily for not less than 18 months. Include specific experience in installing and testing structured telecommunications distribution systems using optical fiber and Category 5e cabling systems.

D50 1.3.4 Material Standards

Ensure service support and provide manufacturer's nameplate in accordance with PTS Section Z10, *General Performance Technical Specification*.

D50 1.3.4.1 Warning Labels

Provide arc flash warning labels.

D50 1.3.4.2 Field-Required Nameplates

Provide laminated plastic nameplates for each switchboard, switchgear, panelboard, equipment enclosure, motor controller, relay, and switch. Each nameplate must identify the function and, when applicable, the position. Provide melamine plastic nameplates, 0.125 inch (3 mm) thick, white with black center core. Surface shall be matte finish. Corners shall be square. Accurately align lettering and engrave into the core. Minimum size of nameplates shall be 1-inch by 2-1/2 inches (25 mm by 65 mm). Lettering shall be a minimum of 0.25 inch (6.35 mm) high normal block style.

D50 1.3.5 Factory Testing

The Government reserves the right to witness all factory testing. The manufacturer shall have a calibration program that assures that all applicable test instruments are maintained within rated accuracy.

D50 1.3.6 Electrical System Startup and Testing

Submit test plans for approval. The test plans shall be tailored to the systems provided.

The test plan shall list make and model and provide functional description of the test instruments and accessories and shall describe the setup of the tests to be conducted. Test instruments shall be capable of measuring and recording or displaying test data at a higher resolution and greater accuracy than specified for the equipment's performance.

D50 1.3.6.1 Factory Trained Engineer

Provide a factory trained engineer to supervise start-up and testing as required in referenced specifications.

D50 1.3.6.2 Performance Verification Testing

The Contractor shall show by demonstration in service that all circuits and devices are in operating condition. Tests shall be such that each item of control equipment will function not less than five times. The Contractor shall provide all necessary test equipment, tools, fuel, load banks, labor, and materials for testing. As a minimum, all systems shall be tested in accordance with manufacturer's recommendations. Additional testing requirements for the various systems are described with those systems, hereinafter. The Contractor shall assure that all applicable test instruments are maintained within rated accuracy. Dated calibration labels shall be visible on all test equipment.

Submit a separate electrical field test plan in accordance with manufacturer's recommendations and that conforms to NETA ATS for each piece of Electrical Distribution Equipment and System requiring Performance Verification Testing.

The following items identify specific test requirements. Additional test requirements are contained in the applicable UFGS.

a. Panelboards - Field test each GFI and AFI circuit breaker with a UL 1436-certified outlet circuit tester to verify correct operation.
b. Motor control centers – Test motor control centers and motor starters in accordance with NETA ATS.
c. Transient voltage surge suppressors(TVSS) –

1) Inspect for physical damage and compare nameplate data with the drawings and specifications, if applicable. Verify from the nameplate data that the TVSS equipment is appropriate for the system voltage.

2) Verify lead length between the TVSS equipment and the circuit connection is less than one foot.

3) Verify wiring between the TVSS equipment and the circuit connection does not include high-inductance coils or sharp bends.

4) Confirm circuit breaker used for TVSS circuit connection is sized in accordance with TVSS manufacturer's requirements.

5) Ensure TVSS equipment is grounded in accordance with TVSS manufacturer's requirements. Check the ground lead on each device for individual attachment to the ground bus or electrode.

6) Check tightness of connections in accordance with NETA ATS.

7) For TVSS equipment with visual indications of proper operation, verify that it displays normal operating characteristics.

d. Busway – Conduct standard tests for busway in accordance with NETA ATS.
e. Receptacles – Test GFI receptacles with a UL 1436-certified outlet circuit tester to verify correct operation.
f. Lighting - Aim photocell switches and locate light

level sensors in accordance with the manufacturer's recommendations. Verify that equipment operates in accordance with user's requirements and in accordance with manufacturer's recommendations. Fluorescent lamps on electronic dimming ballast control shall be burned in at full light output for 100 hours before dimming.

g. Telecommunication - Test telecommunications systems in accordance with applicable EIA/TIA requirements.

h. Public address and intercommunications systems - Tests shall include originating and accepting messages at each station, at proper volume levels, without cross-talk or noise from other links or non-designated units. Test shall utilize the phonetically balanced monosyllabic work intelligibility test in accordance with ANSI S3.2 (ASA 85). In order to be acceptable, a score of at least 75 percent must be obtained for each system test.

i. Community Antenna Television Systems - Confirm design and installation is in compliance with NCTA-02, 47 CFR 76.605 and in accordance with FCC proof of performance requirements. Test plan shall define tests required to ensure that the system meets technical, operational, and performance specifications. Test plan shall include plan for testing for signal leakage.

j. Electronic security systems (ESS) - Test ESS in accordance with UFGS requirements.

k. Grounding systems - Test the grounding system in accordance with NETA ATS.

l. Lightning protection - Upon completion of the installation, Contractor shall furnish the UL Lightning Protection Inspection Certificate certified to UL 96A for the system.

m. Emergency lighting - Test emergency lighting that is intended for means of egress in accordance with NFPA 101, Section 5-9. Confirm the emergency lighting system operates for a minimum of 90 minutes and emergency illumination satisfies NFPA 101, Section 5-9, specified levels.

n. ~~Building Integrated or Mounted Photovoltaic System (BIMPV) - Start up report including system performance. System performance shall be compared to expected performance and shall include at a minimum solar irradiance, DC energy, AC energy, ambient air temperature and PV cell temperature. System performance shall be measured and reported for at least one full day. If the performance monitoring of the installed array indicates the array is not meeting its required performance predictions it shall be corrected by the Contractor at the Contractor's expense. Following correction, performance monitoring will again be performed until the array meets required performance predictions. Measurements made under actual installation and temperature will be normalized to Standard Test Conditions (STC).~~ (NIC)

D50 1.3.6.3 Acceptance Tests and Inspections

The Government reserves the right to witness all Acceptance Tests and Inspections, review data, and request other such additional inspections and repeat tests as necessary to ensure that the system and provided services conform to the stated requirements.

The Qualified Testing Organization shall provide the

Acceptance Tests and Inspections test plan and perform the acceptance tests and inspections. Test methods, procedures, and test values shall be performed and evaluated in accordance with NETA ATS, the manufacturer's recommendations, and paragraph entitled "Field Quality Control" of each applicable specification section. Tests identified as optional in NETA ATS are not required unless otherwise specified. Equipment shall be placed in service only after completion of required tests and evaluations of the test results have been completed. Contractor shall supply to the testing organization complete sets of shop drawings, settings of adjustable devices, and other information necessary for an accurate test and inspection of the system prior to the performance of any final testing. Perform acceptance tests and inspections on Diesel-Electric Generators, Uninterruptible Power Supply (UPS) Systems, 400-Hertz Motor Generator Sets, 400-Hertz Solid State Frequency Converters, Automatic Transfer Switches, and Switchboards and Switchgear.

D50 1.4 DESIGN SUBMITTALS

Design Submittals shall be in accordance with PTS Section Z10, *General Performance Technical Specifications*, UFGS Section 01 33 10.05 20, *Design Submittal Procedures*, UFC 1-300-09N, *Design Procedures*, and UFC 3-501-01, *Electrical Engineering*.

In addition, UFGS sections listed below or in the body of the PTS text are to be used by the Designer of Record (DOR) as a part of the design submittal. If the UFGS products or systems are applicable to the project, the DOR shall edit these referenced UFGS sections and submit them as a part of the design submittal specification. Edit the specification sections in accordance with the limitations stated in PTS Section Z10, *General Performance Technical Specifications*.

UFGS 26 23 00, *Switchboards and Switchgear*

UFGS 26 29 23, *Variable Frequency Drives System Under 600 Volts*

UFGS 26 32 13.00 20, *Single Operation Generator Sets*

UFGS 26 32 26, *Motor Generator Sets, 400 Hertz*

UFGS 26 33 53.00 20, *Uninterruptible Power Supply (UPS)*

UFGS 26 35 43, 400 *Hertz Frequency Converters*

UFGS 26 36 23.00 20, *Automatic Transfer Switches*

UFGS 28 20 00.00 20, *Electronic Security System (ESS), Commercial*

D50 1.5 CONSTRUCTION SUBMITTALS

Submit construction submittals in accordance with PTS Section Z10, *General Performance Technical Specifications*. In addition to the PTS Section Z10 requirements, the Designer of Record (DOR) shall approve the following construction submittals as a minimum:

Electrical Equipment, OMSI information for equipment, and Quality Assurance Submittals listed above.

Provide certification that all adjustable protective device settings have been set in accordance with the coordination study for the as-built equipment and configuration.

D5010 ELECTRICAL SERVICE AND DISTRIBUTION

D501001 MAIN TRANSFORMERS

Pad mounted distribution transformers shall be in accordance with PTS Section G40, *Site Electrical Utilities*.

D501002 SERVICE ENTRANCE EQUIPMENT

When a switchboard or switchgear is required, the Designer of Record shall utilize UFGS Section 26 23 00 for the project specification, and shall submit the edited specification section as a part of the design submittal for the project.

D501003 INTERIOR DISTRIBUTION TRANSFORMERS

D501004 PANELBOARDS

Panelboards shall comply with UL 67 and UL 50. UL 869A shall apply if used as service entrance equipment. Panelboards for non-linear loads shall be UL listed, including heat rise tested, in accordance with UL 67, except with the neutral assembly installed and carrying 200 percent of the phase bus current during testing.

Provide molded case circuit breakers in accordance with UL 489. Ground fault circuit interrupting circuit breakers shall comply with UL 943. Arc fault circuit breakers shall comply with UL 489 and UL 1699.

D501005 ENCLOSED CIRCUIT BREAKERS

Provide molded case circuit breakers in accordance with UL 489. UL 869A shall apply if used as service entrance equipment. Provide with solid neutral when grounded conductor is present.

D501006 MOTOR CONTROL CENTERS

Motor control centers shall comply with UL 845, NEMA ICS 2, and NEMA ICS 3. Motor controllers shall comply with UL 508. Provide disconnecting means capable of being locked out for machines and other equipment to prevent unexpected startup or release of stored energy in accordance with 29 CFR 1910.147.

D501006 1.1 VARIABLE FREQUENCY DRIVES (VFD)

When Variable Frequency Drives are required, the Designer of Record shall utilize UFGS Section 26 29 23 for the project specification, and shall submit the edited specification section as a part of the design submittal for the project.

D501090 OTHER SERVICE AND DISTRIBUTION

D501090 1.1 TRANSIENT VOLTAGE SURGE SUPRESSORS (TVSS)

D501090 1.2 BUSWAY

Busway shall comply with NEMA BU 1 and UL 857.

D5020 LIGHTING AND BRANCH WIRING

D502001 BRANCH WIRING

Provide wiring and connections for special outlets where required.

All homerun circuits must contain no more than 3 phase conductors.

Switches shall comply with NEMA WD-1 and UL 20.

D502002 LIGHTING EQUIPMENT

Installation shall meet requirements of manufacturer's recommendations and the additional requirements for "Severe Seismic Disturbance" contained in ASTM E 580. Fixture support wires shall conform with ASTM A 641/A 641M, galvanized regular coating, soft temper.

D502002 1.1 BALLASTS

Electronic ballasts shall include a 5-year warranty.

D5030 COMMUNICATIONS AND SECURITY

D503001 TELECOMMUNICATIONS SYSTEMS

D503002 PUBLIC ADDRESS SYSTEMS

D503003 INTERCOMMUNICATIONS SYSTEMS

D503004 TELEVISION SYSTEMS

D503004 1.1 CLOSED CIRCUIT TELEVISION (CCTV) FOR VIDEO TRAINING

D503004 1.2 COMMUNITY ANTENNA SYSTEM (CATV)

D503005 SECURITY SYSTEMS

D503005 1.1 ELECTRONIC SECTURITY SYSTEMS (ESS)

When an ESS system is required, the Designer of Record shall utilize UFGS Section 28 20 00.00 20 for the project specification and shall submit the edited specification section as a part of the design submittal for the project.

D503005 1.2 PROTECTED DISTRIBUTION SYSTEMS (PDS)

Protected Distribution Systems shall be in accordance with UFC 3-580-10 and IA PUB-5239-22, Information Assurance Protected Distribution System (PDS) Guide Book.

D503005 1.3 SENSITIVE COMPARTMENTED INFORMATION FACILITIES (SCIF)

Electrical systems installed within SCIF spaces or facilities shall be in accordance with the Director of Central Intelligence Directive (DCID) 6/9.

D503090 OTHER COMMUNICATIONS AND ALARM SYSTEMS

D5090 OTHER ELECTRICAL SERVICES

D509001 GENERAL CONSTRUCTION ITEMS (ELECTRICAL)

D509002 EMERGENCY LIGHTING AND POWER

D509002 1.1 EMERGENCY LIGHTING

D509002 1.2 EMERGENCY GENERATORS

When an emergency generator is required, the Designer of Record shall utilize UFGS Section 26 32 13.00 20 for the project specification, and shall submit the edited specification section as a part of the design submittal for the project.

D509002 1.3 AUTOMATIC TRANSFER AND BYPASS/ISOLATION SWITCHES

When an Automatic Transfer Switch is required, the Designer of Record shall utilize UFGS Section 26 36 23.00 20 for the project specification, and shall submit the edited specification section as a part of the design submittal for the project.

D509002 1.4 UNINTERRUPTIBLE POWER SUPPLY (UPS) SYSTEM

When a UPS system is required, the Designer of Record shall utilize UFGS Section 26 33 53.00 20 and shall submit the edited specification section as a part of the design submittal for the project.

D509003 GROUNDING SYSTEMS

D509004 LIGHTNING PROTECTION

D509005 ELECTRIC HEATING

D509006 ENERGY MANAGEMENT CONTROL SYSTEM

D509007 BUILDING PHOTOVOLTAIC SYSTEM (NIC)

~~Provide building integrated or mounted photovoltaic (BIMPV) systems on building rooftops. System shall be a non grid-tied system and the system output voltage shall match the building voltage and be a 3-phase, 4-wire system.~~

~~Provide all labor, materials, equipment and supervision required to implement the design and to provide a fully operational system;~~

~~Provide PV modules with a 20-year limited manufacturer warranty that generates no less than 80% of the rated output under Standard Test Conditions (STC).~~

~~Provide manufacturer start-up, testing and balancing, and document final operation testing.~~

~~**D509007 1.1 CODES AND STANDARDS**~~

~~The PV system hardware and services shall meet or exceed all local, State and utility requirements, conform to the applicable codes and standards, and have passed the listing and qualification tests, listed below. (Comply with the most recent version of each document).~~

~~a. IEEE 1262 "Recommended Practice for Qualifications of Photovoltaic Modules".~~

~~b. PowerMark certification for PV modules.~~
~~c. IEEE Standard 928-1986, Recommended Criteria for Terrestrial Photovoltaic Power Systems (PV system performance criteria).~~
~~d. IEEE 929-2000, Recommended Practice for Utility Interface of Photovoltaic (PV) Systems.~~
~~e. Underwriters Laboratories 1741-2001 (UL Standard for Inverters and Charge Controllers).~~
~~f. Underwriters Laboratories 1703 (UL Standard for Listing Photovoltaic Modules).~~
~~g. Certification of PV Equipment: All PV modules, inverters, and electrical components shall be required to be listed or recognized by an appropriate and recognized United States Safety Laboratory (for example: UL or ETL).~~

~~**D509007 1.2 PHOTOVOLTAIC ROOFTOP APPLICATION ANALYSIS**~~

~~Provide a comprehensive "Photovoltaic Application Analysis" with a detailed description of system, application, site shading conditions and expected kW output of the rooftop photovoltaic applications. The analysis shall utilize the Solmetric Suneye or the Solar Pathfinderr shading analyzers to analyze the effects of the existing site shading conditions. Analysis shall include thick crystal vs thin film system options and anticipated PV output in kW and kWh per year. Coordinate rooftop application analysis with other equipment that is required to be placed on the roof to determine space available and proper solar orientation for photovoltaic equipment.~~

~~**D509007 1.3 TECHNICAL REQUIREMENTS**~~

~~The contractor work responsibilities include at a minimum: system design, equipment selection, and PV system installations. System shall be individually capable of providing peak power output of at least proposed PV system size, 208 or 480 volt, 3-phase, 4-wire power.~~

~~The final System configuration shall allow automatic operation without operator intervention. System design and equipment specifications shall minimize maintenance requirements. System shall include metering that must be incorporated with current AMI network (Advanced Metering Infrastructure) and planned energy metering projects.~~

~~The inverter(s) disconnects and associated electrical equipment must be located in an area that is accessible, weather-protected, and secure from vandalism and personal injury.~~

~~Disconnects and over current devices shall be mounted in approved boxes, enclosures, or panel boards. Disconnects and switches shall be DC rated when used in DC applications. Metal enclosures and boxes shall be bonded to the grounding conductor.~~

~~At a minimum, electrical meters shall capture the following data on individual system performance (minimum solar irradiance, DC power, AC real power, AC current, AC voltage, and power factor (recommend ION 8600 for AC); ambient air temperature, PV cell temperature, kW, and kWh). This data shall be captured at hourly intervals for a minimum one year. Units of temperature, power, and current shall be in Fahrenheit, Watts, and Amps respectively.~~

~~Transformers, if required, shall have a minimum efficiency based on factory test results of not less than the efficiency indicated in 10 CFR 431, Subpart K, paragraph 431.196(b). Transformers shall be housed in a NEMA 4X enclosures.~~

~~Mounting structures shall be corrosion resistant to marine environment.~~

~~D509007 1.4 OPERATORS MANUALS AND TRAINING~~

~~Operators manuals for each system component shall include detailed instructions on how to operate the system, programming and installation instructions, emergency operating procedures, default program values and set points, listing of field programmed variables and set points, equipment wiring diagrams, product model number, with Name, Address and Telephone number of local representative, and starting, operating, and shut down procedures. Include normal and emergency shut down procedures, schedule of maintenance work, if any, recommended cleaning agents and methods, replacement parts list, including internal fuses, and warranty information.~~

~~Provide a formal 2-hour on-site training session instructing operators in the operation and maintenance of the new system, including operation and maintenance of inverters, disconnects and other system components. Instruct personnel in removal and installation of panels, including wiring and all connections. At the time of training the Contractor shall furnish, for the equipment specified, operation and maintenance manuals, record drawings and recommended spare parts lists identifying components adequate for competitive supply procurement for operation and maintenance of system.~~

D509090 OTHER SPECIAL SYSTEMS AND DEVICES

D509090 1.1 400 HERTZ SYSTEMS

The Designer of Record shall utilize UFGS Section 26 32 26 or UFGS Section 26 35 43 for the project specification, and shall submit the edited specification section as a part of the design submittal for the project.

--End Of Section--

SECTION E20

FURNISHINGS
11/10

E20 GENERAL

RFP Part 3 including the Engineering System Requirements (ESR) provide project specific requirements. The RFP Part 4 Performance Technical Sections (PTS) provide generalized technical requirements that apply to multiple facility types and include more requirements than are applicable to this project. Therefore RFP Part 4 requirements that correspond and further define the RFP Part 3 requirements are specific to this project, other RFP Part 4 requirements are not required.

E20 1.1 DESIGN GUIDANCE

Provide the design and installation in accordance with the following references. This Performance Technical Specification (PTS) adds clarification to the fundamental requirements contained in the following Government Standards. The general requirements of this PTS section are located in PTS Section Z10, *General Performance Technical Specification*.

Industry standards, codes, and Government standards referenced in the section text that are not found in the Unified Master Reference List (UMRL) in the Construction Criteria Base (CCB) at the Whole Building Design Guide Website , are listed below for basic designation identification. Comply with the required and advisory portions of the current edition of the standard at the time of contract award:

E20 1.1.1 Industry Standards and Codes

E20 1.1.2 Government Standards

UNIFIED FACILITIES CRITERIA (UFC)

UFC 1-200-01	General Building Requirements(A reference in this PTS section to UFC 1-200-01 requires compliance with the Tri-Service Core UFCs that are listed in UFGS Section 01 33 10.05 20, which includes the following significant UFC(s):UFC 3-100-10N, Architecture UFC 03-120-10, Interior Design)

E20 1.3 DESIGN SUBMITTALS

Design Submittals shall be in accordance with Z10, *General Performance Technical Specifications*, UFGS section 01 33 10.05 20, *Design Submittal Procedures*, UFC 1-300-09N, *Design Procedures*, and UFC 03-120-10, *Interior Design*.

E20 1.4 CONSTRUCTION SUBMITTALS

Submit construction submittals in accordance with PTS Section Z10, *General Performance Technical Specifications*.

E2010 FIXED FURNISHINGS

E201002 WINDOW TREATMENTS

Provide interior window coverings, associated hardware and controls at each exterior window and at any interior view window where privacy may be required. Refer to the Project Program for size, pattern and style of window treatments. At a minimum, functional window coverings such as blinds or solar shades are required on all projects.

E201002 1.1 BLINDS

Blinds shall be provided at each exterior window and at any interior window where privacy may be required. Horizontal window blinds shall be FS AA-V00200, Type II, one-inch (1”) slats, with matching valance. Provide lengths and widths as required for installation between window jambs. Plastic or vinyl slats are preferred for Type I Venetian blinds. Braided polyester or synthetic fiber chords, ends heat fused terminated with a plastic tassel or continuous. One full size sample shall be provided and installed for review and approval.

E201003 SEATING (FIXED)

E201003 1.1 LOCKER ROOM BENCH SEATING

Provide maple bench seating with waterproofing finish, mounted on stainless steel heavy duty pedestals. Pedestals shall be formed to eliminate tripping hazards and shall have holes for bolt attachment to the floor.

-- End of Section --

SECTION G10

SITE PREPARATION
11/10

G10 GENERAL

RFP Part 3 including the Engineering System Requirements (ESR) provide project specific requirements. The RFP Part 4 Performance Technical Sections (PTS) provide generalized technical requirements that apply to multiple facility types and include more requirements than are applicable to this project. Therefore RFP Part 4 requirements that correspond and further define the RFP Part 3 requirements are specific to this project, other RFP Part 4 requirements are not required.

G10 1.1 DESIGN GUIDANCE

Provide the design and installation in accordance with the following references. This Performance Technical Specification (PTS) adds clarification to the fundamental requirements contained in the following Government Standards. The general requirements of this PTS section are located in PTS Section Z10, *General Performance Technical Specification*.

G10 1.1.1 Industry Standards and Codes

Refer to UMRL for reference designation identification.

G10 1.1.2 Government Standards

CORPS OF ENGINEERS (COE)

COE EM 385-1-1	Safety and Health Requirements Manual

UNIFIED FACILITIES CRITERIA (UFC)

UFC 1-200-01	General Building Requirements(A reference in this PTS section to UFC 1-200-01 requires compliance with the Tri-Service Core UFCs that are listed in UFGS Section 01 33 10.05 20, which includes the following significant UFC(s):UFC 3-200-10N, Civil Engineering UFC 3-220-01N, Geotechnical Engineering)
UFC 3-800-10N	Environmental Engineering for Facility Construction

UNIFIED FACILITIES GUIDE SPECIFICATIONS (UFGS)

UFGS 31 23 00.00 20	Excavation and Fill

G10 1.2 PERFORMANCE VERIFICATION AND ACCEPTABLE TESTING

Compliance with the requirements will be determined by a review of the design and construction submittals and by field inspection. See Section 01 33 10.05 20, *Design Submittal Procedures*, and Section 01 33 00.05 20, *Construction Submittal Procedures*, for additional requirements. Verification of satisfactory earthwork performance shall be via testing detailed in the paragraph, "Field Quality Control", in UFGS Specification Section 31 23 00.00 20, *Excavation and Fill*.

G10 1.3 DESIGN SUBMITTALS

Design Submittals shall be in accordance with UFGS section 01 33 10.05 20, *Design Submittal Procedures*, UFC 1-300-09N, *Design Procedures*, UFC 3-200-10N, *Civil Engineering*, and UFC 3-220-01N.

In addition, UFGS sections listed below or in the body of the PTS text are to be used by the Designer of Record (DOR) as a part of the design submittal. If the UFGS products or systems are applicable to the project, the DOR shall edit these referenced UFGS sections and submit them as a part of the design submittal specification. Edit the specification sections in accordance with the limitations stated in PTS section Z10, *General Performance Technical Specifications*.

UFGS 31 23 00.00 20 (02315N), *Excavation and Fill*

G10 1.4 CONSTRUCTION SUBMITTALS

Submit construction submittals in accordance with PTS Section Z10, *General Performance Technical Specifications*. In addition to the Z10 requirements, the Designer of Record (DOR) shall approve the following construction submittals as a minimum:

Submittals in UFGS 01 57 19.05 20 (01577N), Temporary Environmental Controls for Design-Build.

Submittals in UFGS Specification Section 31 23 00.00 20 (02315N), Excavation and Fill.

Demolition plan in accordance with Section 01 74 19, Construction and Demolition Waste Management.

G10 1.5 GEOTECHNICAL REPORT

G10 1.5.1 Subsurface Soils Information

Any provided subsurface soil information is included for the Contractor's information only, and is not guaranteed to fully represent all subsurface conditions. The data included in this RFP are intended for proposal preparation and preliminary design only. The Contractor shall perform, at his expense, such subsurface exploration, investigation, testing, and analysis as his Designer of Record deems necessary for the design and construction of the site improvements.

G10 1.5.2 Contractor-provided Geotechnical Engineer

The Contractor-provided Geotechnical Engineer is required to be experienced with soil conditions in the region where the project site is located. The Geotechnical Engineer shall evaluate the RFP

data, obtain and evaluate all additional data as required to support the design and construction, and prepare a Geotechnical Report.

All work by the Contractor-provided Geotechnical Engineer at the project location, if required, shall be coordinated with the Contracting Officer and shall not interfere with normal base operations. A minimum of two weeks prior to the Foundation Work Design submittal, provide the Contractor's Geotechnical Report (an editable Adobe Acrobat PDF version on CD and two printed copies) for review and record keeping purposes. The report shall become the property of the Government. Provide the geotechnical reports generated during construction, such as pile driving results and analysis, to the Contracting Officer. In addition, provide an editable Adobe Acrobat PDF version and two printed copies for record keeping purposes.

G10 1.5.3 Contractor-Provided Geotechnical Report

Submit a written Geotechnical report based upon Government-provided subsurface investigation data and all additional field and laboratory testing accomplished at the discretion of the Contractor’s Geotechnical Engineer. The Geotechnical Report shall include the following:

a. The project site description, vicinity map and site map indicating the location of borings and any other sampling locations. Provide 24 hour groundwater observations for at least 20% of the borings, minimum one boring. Provide notes explaining any abbreviations or symbols used and describing any special site preparation requirements.
b. Results of all applicable field and laboratory testing, whether Government or Contractor-provided. Address existing subsurface conditions, selection and design of the foundation and floor slab, all underground construction including utility installation and all other site specific requirements (such as soil stabilization and slope stability).
c. Engineering analysis, discussion and recommendations Addressing:

1) Settlement analysis - Settlement shall be limited as required in EM 1110-1-1904 "Settlement Analysis".

2) Bearing Capacity analysis

3) Foundation selection (shallow, deep, special) and construction considerations; dimensions, and installation procedures.

4) Site preparation (earthwork procedures and equipment, compaction requirements, building slab preparation (as applicable), soil sensitivity to weather and equipment, groundwater influence on construction, mitigation of expansive soils or liquefaction potential, and dewatering requirements).

5) Sheeting and shoring considerations, as applicable.

6) Pavement design calculations with parameters defined, actual or assumed, and recommended thicknesses and materials.

7) Haul routes and stockpile locations for earthwork, as

applicable.

8) Calculations to support conclusions and recommendations.

9) Recommendations shall be presented on a structure-by-structure basis.

The Geotechnical Report shall be signed by a registered Geotechnical Engineer.

The submitted report shall be accompanied by a cover letter identifying any report recommendations proposed to be adopted into the design which are interpreted by the Contractor as a changed condition to the Geotechnical or Pavement related requirements of the RFP.

G10 1.5.4 Geotechnical Site Data required in Design Drawings

The Contractor's final design drawings shall include the Government-provided subsurface data presented in the RFP, as well as any additional borings and laboratory test result data performed by the Contractor. The data provided shall include:

a. Logs of Borings and related summary of laboratory test results and groundwater observations. Provide 24 hour groundwater observations for at least 20% of the borings, minimum one boring. Provide notes explaining any abbreviations or symbols used and describing any special site preparation requirements.
b. The locations of all borings shall be indicated on the drawings. The applicable design drawings shall be revised to reference the Contractor's Geotechnical Report as being a basis for design.

G1010 SITE CLEARING

G1010 1.1 GENERAL

Clear and grub project site as required for project construction.

G1010 1.2 BURNING

Burning is not permitted.

G101001 CLEARING

G101001 1.1 CLEARING

The Contractor shall clear all trees, shrubs, brush and vegetation necessary for construction of the project. Clearing includes the felling, trimming, and cutting of trees into sections.

G101001 1.2 PRESERVATION

Preserve and protect trees, shrubs and vegetation not directly impacted by the construction in accordance with Section 01 57 19.00 20, *Temporary Environmental Controls*.

G101002 TREE REMOVAL

Remove and dispose of trees to a depth of at least 18 inches (450 mm) below ground surface. Fill depressions with satisfactory material and compact. Mound fill 2 inches (50 mm) above adjacent surface to allow for settling when not part of a subbase.

G101003 STUMP REMOVAL

Remove stumps to a depth of at least 18 inches (450 mm) below ground surface and grind stumps 18 to 30 inches (450 to 750 mm) below ground surface. Fill depressions with satisfactory material and compact. Mound fill 2 inches (50 mm) above adjacent surface to allow for settling when not part of a subbase.

G101004 GRUBBING

Within the clearing limits, remove and dispose of all logs, shrubs, brush, matted roots, roots larger than 2 inches (50 mm) in diameter, and other debris to a depth of at least 18 inches (450 mm) below ground surface. Fill depressions made by grubbing with satisfactory material and compact to make the new surface conform to the adjacent surface of the ground.

G101005 SELECTIVE THINNING

G101005 1.1 TREE THINNING

Trim trees to remain of dead branches 1-1/2 inches (38 mm) or more in diameter. Neatly cut limbs and branches to be trimmed close to the bole of the tree or main branches.

G101006 DEBRIS DISPOSAL

Prevent spillage on pavements, streets, or adjacent areas. Dispose of all surplus and unsuitable material off of Government property.

G1020 SITE DEMOLITION & RELOCATIONS

G1020 1.1 GENERAL

Demolition work shall include the demolition, removal and legal disposal of existing construction debris as required to accommodate the new construction. The Contractor shall take care to prevent damages to existing utilities, construction and materials not scheduled for demolition, repair or replacement, and shall repair damages to the construction and materials to the satisfaction of the Contracting Officer and at no additional cost to the Government.

G1020 1.2 AUTHORIZATION

Do not begin demolition until the Demolition Plan has been approved by and authorization is received from the Contracting Officer.

G1020 1.3 TITLE TO MATERIALS

Whenever possible, all features demolished shall be salvaged or recycled in lieu of being disposed of as waste in a landfill. Existing features to be demolished which are not salvageable or reused, shall become the property of the Contractor and shall be removed from project site. The Government will not be responsible for the condition, loss of, or damage to, such property after contract award. Materials and equipment shall not be viewed by prospective purchasers or sold on the site.

G1020 1.4 REUSE OF MATERIALS AND EQUIPMENT

Remove and store materials and equipment to be reused or relocated to prevent damage, and reinstall as the work progresses.

G1020 1.5 SALVAGED MATERIALS AND EQUIPMENT

Salvage materials and equipment that are to be removed by the Contractor and that are to remain the property of the Government, and deliver to a storage site on the station in accordance with instructions of the Contracting Officer.

G102001 BUILDING MASS DEMOLITION

Refer to Section F20 for additional information.

G102002 ABOVEGROUND SITE DEMOLITION

G102002 1.1 DUST AND DEBRIS CONTROL

Prevent the spread of dust and debris to occupied portions of a building or on pavements and avoid the creation of a nuisance or hazard in the surrounding area. Do not use water for dust control if it results in hazardous or objectionable conditions such as, but not limited to, ice, flooding, or pollution. Sweep pavements as often as necessary to control the spread of debris that may result in foreign object damage potential to aircraft.

G102002 1.2 PROTECTION

G102002 1.2.1 Traffic Control

G102002 1.2.2 Foreign Object Damage (FOD)

G102002 1.2.3 Existing Work

G102002 1.2.4 Noise Pollution

G102003 1.1 PROTECTION OF EXISTING UTILITIES

Protect existing utilities to remain. Where removal of existing utilities and pavement is required, provide approved barricades, temporary covering of exposed areas, and temporary services or connections. Repair damage to existing utilities to remain at no additional expense to the government.

G102004 BUILDING RELOCATION

G102005 UTILITY RELOCATION

Repair relocated items that are damaged or replace damaged items with new undamaged items as approved by the Contracting Officer and at no additional expense to the government.

G102006 FENCING RELOCATION

Remove and replace post foundations. Repair relocated items that are damaged or replace damaged items with new undamaged items as approved by the Contracting Officer and at no additional expense to the government. Refer to Section G204001 for requirements for new fence systems, as applicable.

G102007 SITE CLEANUP

Remove rubbish and debris from the station daily; do not allow accumulations inside or outside the building(s) or on pavements. Store materials that cannot be removed daily in areas specified by the Contracting Officer.

G1030 SITE EARTHWORK

G1030 1.1 GENERAL

This section includes the design and construction requirements for earthwork and grading related to construction of the roadways, parking, paved areas and other related sitework. Refer to Section A10 for earthwork related to construction of structures, including building, footings, foundations, retaining walls, slabs, tanks, and utility appurtenances.

The Designer of Record shall utilize UFGS Specification Section 31 23 00.00 20, *Excavation and Fill*, for the project specification, and shall submit the edited specification section as a part of the design submittal for the project.

G103001 GRADING

G103001 1.1 ELEVATIONS

Establish finish floor elevations as required by UFC 3-200-10N, *Civil Engineering*.

G103001 1.2 SITE GRADING

The Contractor shall preserve natural topographic features to minimize the impact on the existing drainage patterns at and adjacent to the site. Provide site grading in accordance with the requirements of the UFC 3-200-10N, *Civil Engineering*.

G103001 1.3 FINISHED SURFACES

Finish grading shall provide drainage towards new and existing drainage features. Finish grading shall not result in low spots that hold water or that direct runoff towards new or existing facilities or site amenities. Finish grading shall be in accordance with the requirements of the UFC 3-200-10N, *Civil Engineering*.

G103002 COMMON EXCAVATION

The Contractor shall preserve natural topographic features to minimize cut and fill requirements. All unsuitable material and surplus excavation shall become the property of the Contractor and shall be disposed of as indicated in the Project Program.

G103003 ROCK EXCAVATION

Blasting is not allowed.

G103004 FILL & BORROW

G103004 1.1 SOURCES

Where sufficient topsoil and satisfactory materials are not available on the project site, provide suitable borrow materials.

G103004 1.2 UNSATISFACTORY SOIL MATERIALS

Remove unsatisfactory soil materials from the site in accordance with the Project Program and replace with satisfactory soil materials in accordance with UFGS Specification Section 31 23 00.00 20, *Excavation and Fill*.

G103004 1.3 TOPSOIL

Refer to Section G2050, "Landscaping". Remove unsatisfactory, existing topsoil from the site in accordance with the Project Program.

G103005 COMPACTION

Provide compaction in accordance with UFGS Specification Section 31 23 00.00 20, *Excavation and Fill*, and the recommendations of the Contractor's Geotechnical Engineer, whichever is greater.

G103006 SOIL STABILIZATION

Not Used.

G103007 SLOPE STABILIZATION

Not Used.

G103008 SOIL TREATMENT

G103008 1.1 TERMITE CONTROL

Refer to Section A1010 1.2, "Termite Control".

G103008 1.2 RODENT AND VEGETATION CONTROL

Prevent and eliminate standing water.

G103009 SHORING

Provide sheeting, shoring, bracing, cribbing and underpinning in accordance with the Army Corps of Engineer's Safety and Health Requirements Manual (COE EM 385-1-1), UFC 3-220-01N, *Geotechnical Engineering*, UFC 3-301-01N, *Structural Engineering*, and all other applicable Federal, State and local codes and requirements

Provide protection of existing structures.

G103010 TEMPORARY DEWATERING

The design of the temporary dewatering system shall account for soil conditions, rainfall, fluctuations in the groundwater elevations and the potential settlement impact on adjacent facilities due to dewatering. Provide dewatering in accordance with UFGS Specification Section 31 23 00.00 20. While the excavation is open, the water level shall be maintained continuously, at least 1.0 foot (0.30 m) below the working level.

French drains, sumps, ditches or trenches will not be permitted within 3 feet (0.9 m) of the foundation of any structure without written approval of the NAVFAC Civil/Geotechnical Reviewer.

G103011 TEMPORARY EROSION & SEDIMENT CONTROL

G103011 1.1 TEMPORARY EROSION & SEDIMENT CONTROL

Develop and implement temporary erosion and sediment control measures and other Best Management Practices (BMPs) prior to or in conjunction with commencement of earthwork in accordance with the state Erosion and Sediment Control Laws and Regulations. Remove all non-permanent erosion control measures after vegetation is fully established.

G103011 1.2 MAINTENANCE

Maintain temporary erosion control measures in accordance with state Erosion and Sediment Control Laws and Regulations throughout the project until areas are fully stabilized.

G103090 OTHER SITE EARTHWORK

G103090 1.1 HISTORIC AND ARCHAEOLOGIC ARTIFACTS

Refer to Section 01 50 00.05 20, *Temporary Facilities and Controls for Design-Build*, in Part 2 of this RFP.

G103090 1.2 PIPELINE CASING UNDER RAILROADS OR PAVEMENTS

Where required by code or local practice provide casing for piping under railroads or pavements. The Contractor is responsible for obtaining permits from all government and nongovernment owners/agencies in designing and providing the work.

G103090 1.3 TOPSOIL AND SEED

Provide topsoil and seed according to UFGS Specification Section 31 23 00.00 20, *Excavation and Fill*, except when landscaping is required.

G1040 HAZARDOUS WASTE REMEDIATION

G1040 1.1 EXCAVATION

Perform excavation of contaminated soil and groundwater as indicated in the RFP, in accordance with the ESR and the approved contaminated soil and groundwater removal work plan as described in Section 01 57 19.00 20, *Temporary Environmental Controls*. Areas of contamination shall be excavated to the depth noted elsewhere in the RFP. Select methods and equipment to minimize disturbance to areas beyond the limits of the excavation area. Material that becomes contaminated as a result of the Contractor's operations shall be removed and disposed of at no additional cost to the Government. Where excavation extends into groundwater levels, dewatering methods shall be employed on a localized basis to facilitate excavation operations. Water generated by dewatering during excavation shall be collected and tested in accordance with the ESR and the approved work plan.

Water that contains contaminants above the levels indicated in the ESR shall be disposed of in accordance with the ESR and the approved work plan.

Non-contaminated water may be disposed of on-site.

G1040 1.2 STOCKPILED SOILS

Soils determined to be contaminated in accordance with the criteria in the ESR must be stockpiled in accordance with the contaminated soil and

groundwater removal work plan as described in Section 01 57 19.00 20, *Temporary Environmental Controls*, and shall be disposed of in accordance with the requirements of the ESR.

Soils that are determined to contain contaminants below the criteria listed in the ESR may be used as clean fill.

G1040 1.3 CLEAN FILL

Soils that are determined as clean fill via testing shall be backfilled and compacted in accordance with the requirements listed in the ESR.

G1040 1.4 SPILLS

In the event of a spill or release of hazardous substances, pollutant, contaminant or oil, notify the Contracting Officer immediately. Containment actions shall be taken immediately to minimize the effect of any spill or leak. Clean up shall be performed at the Contractor's expense in accordance with the ESR and the approved spill work plan as described in Section 01 57 19.00 20, *Temporary Environmental Controls*.

G1040 1.5 DISPOSAL

All waste materials shall become the property of the Contractor and shall be transported, disposed of in accordance with the criteria listed in the ESR and the approved disposal plan as described in Section 01 57 19.00 20, *Temporary Environmental Controls*.

-- End of Section --

SECTION G20

SITE IMPROVEMENTS
11/10

G20 GENERAL

RFP Part 3 including the Engineering System Requirements (ESR) provide project specific requirements. The RFP Part 4 Performance Technical Sections (PTS) provide generalized technical requirements that apply to multiple facility types and include more requirements than are applicable to this project. Therefore RFP Part 4 requirements that correspond and further define the RFP Part 3 requirements are specific to this project, other RFP Part 4 requirements are not required.

G20 1.1 DESIGN GUIDANCE

Provide the design and installation in accordance with the following references. This Performance Technical Specification (PTS) adds clarification to the fundamental requirements contained in the following Government Standards. The general requirements of this PTS section are located in PTS Section Z10, *General Performance Technical Specification*.

G20 1.1.1 Industry Standards and Codes

AMERICAN SOD PRODUCERS ASSOCIATION (ASPA)

U.S CONSUMER PRODUCT SAFETY COMMISSION, PUBLICATION NO. 325

G20 1.1.2 Government Standards

U.S. GENERAL SERVICES ADMINISTRATION (GSA)

FS RR-F-191	Fencing and Wire and Post Metal (and Gates, Chain-link Fence Fabric, and Accessories)

CORPS OF ENGINEERS (COE)

TM 5-822-5	Pavement Design for Roads, Streets, Walks, and Open Storage Areas

NAVAL FACILITIES ENGINEERING COMMAND (NAVFACENGCOM)

Military Handbook, MIL-HDBK-1013/14	Selection and Application of Vehicle Barriers

UNIFIED FACILITIES CRITERIA (UFC)

UFC 1-200-01	General Building Requirements(A reference in this PTS section to UFC 1-200-01 requires compliance with

	the Tri-Service Core UFCs that are listed in UFGS Section 01 33 10.05 20, which includes the following significant UFC(s):UFC 3-200-10N, Civil Engineering, UFC 3-201-02, Landscape Architecture, UFC 3-220-01N, Geotechnical Engineering))
UFC 3-800-10N	Environmental Engineering for Facility Construction

UNIFIED FACILITIES GUIDE SPECIFICATIONS (UFGS)

UFGS 32 11 16.13	Base Course
UFGS 32 11 16.16	Base Course for Rigid and Sub-base Course for Flexible Paving
UFGS 32 11 24	Graded Crushed Aggregate Base Course for Flexible Pavement
UFGS 32 11 26.16	Bituminous Concrete Base Course
UFGS 32 12 17	Hot Mix Bituminous Pavement
UFGS 32 13 13.16	Portland Cement Concrete Pavement for Roads and Site Facilities

G20 1.2 QUALITY ASSURANCE

G20 1.2.1 Qualifications of Tree Location Contractor

Contractor shall be a professional tree moving company holding landscape contractor's license in the state where the work is to be performed and have a minimum ten years of tree relocation experience.

G20 1.2.2 Qualifications of New Landscape Contractor

Construction company shall hold a landscape contractor's license in the state where the work is to be performed and have a minimum five years of landscape construction experience.

G20 1.3 PERFORMANCE VERIFICATION AND ACCEPTANCE TESTING

Compliance with the requirements will be determined by a review of the design and construction submittals and by field inspection. See Section 01 33 10.05 20, *Design Submittal Procedures*, and Section 01 33 00.05 20, *Construction Submittal Procedures*, for additional requirements.

Verification of satisfactory performance shall be via Performance Verification, as detailed in this section of the RFP. Verification of satisfactory performance shall also be via testing as detailed in the paragraph, Field Quality Control, in applicable UFGS Specification Sections utilized.

G20 1.3.1 Sub-grade Preparation Performance Verification

Perform sub-grade preparation in accordance with PTS Section G10. If required by the Designer of Record, perform proof rolling. Proof rolling shall be performed in the presence of the Contracting Officer. Rutting or pumping of material shall be undercut as directed by the Contracting Officer and replaced with satisfactory soil materials as defined in Section G10, *Site Preparation*.

G20 1.3.2 Base Course Performance Verification

G20 1.3.2.1 Aggregate Base Course

a. Sampling: ASTM D 75.
b. Gradation: ASTM C 136.
c. Thickness: Confirm in-place compacted thickness. Acceptable tolerances are plus or minus 0.5 inches (13 mm). One test for every 500 square yards (418 square meters); minimum 2 tests.
d. Density: ASTM D 1556 or ASTM D 2922 and ASTM D 3017. One field test for every 1000 square yards (836 square meters); minimum 2 tests. ASTM D 1557, Method D; one laboratory test for the project.
e. Visual: Surface shall be smooth with no ruts.

G20 1.3.2.2 Other Types of Base Courses

For other types of base courses, provide field testing in accordance with TM 5-822-12.

G20 1.3.3 Bituminous Concrete Pavement Performance Verification

a. Visual: Finished surface shall be uniform in texture and appearance and free of cracks and creases.
b. Sampling: ASTM D 979.
c. Job Mix: Determine gradation and bitumen content. One sample for every 400 tons (362,500 kilograms); minimum 1 test.
d. Thickness: ASTM D 3549. Confirm in-place compacted thickness. Acceptable tolerances are plus or minus 0.5 inches (13 mm) for bituminous base course and plus or minus 0.25 inches (6 mm) for bituminous surface course. One test for every 500 square yards (418 square meters); minimum 2 tests.
e. Surface Smoothness: Test surface smoothness by using a 10 foot (3 meter) straightedge in transverse and longitudinal directions to pavement. Acceptable tolerances are plus or minus 0.25 inches (6 mm) for bituminous base and surface courses.
f. Density: Conduct field density of in-place compacted pavement in accordance with ASTM D 2950 and correlated with ASTM D 1188 or ASTM D 2726. One field test for every 1000 square yards (836 square meters); minimum 2 tests. One laboratory test for the project.

G20 1.3.4 Portland Cement Concrete Pavement Performance Verification

a. Visual: Finished surface shall be uniform in texture and appearance and free of cracks.
b. Sampling: ASTM C 31M (ASTM C 31).
c. Thickness: Acceptable tolerances are plus or minus 0.5

inches (13 mm). One test for every 500 square feet (418 square meters); minimum 2 tests.

d. Surface Smoothness: Test surface smoothness by using a 10 foot (3 meter) straightedge in transverse and longitudinal directions to pavement. The finished surfaces of the pavements shall have no abrupt change of 0.12 inch (3 mm) or more.

e. Strength: Samples for strength tests of each mix design of concrete placed each day shall be taken not less than once a day, nor less than once for each 100 cubic yards (120 cubic meters) of concrete, nor less than once for each 5000 square feet (500 square meters).

1) Compressive Strength: ASTM C 39. Make five test cylinders for each set of tests. Test two cylinders at 7 days, two cylinders at 28 days, and hold one cylinder in reserve. Each strength test result shall be the average of two cylinders from the same concrete sample tested at 28 days. If the average of any three consecutive strength test results is less than f'c or if any strength test result falls below f'c by more than 500 psi, take a minimum of three ASTM C 42/C 42M core samples from the in-place work represented by the low test cylinder results and test. Concrete represented by core test shall be considered structurally adequate if the average of three cores is equal to at least 85 percent of f'c and if no single core is less than 75 percent of f'c. Locations represented by erratic core strengths shall be retested.

2) Flexural Strength: ASTM C 78. Make four test specimens for each set of tests. Test two specimens at 28 days, and the other two at 90 days. Concrete strength will be considered satisfactory when the minimum of the 90-day test results equals or exceeds the specified 90-day flexural strength, and no individual strength test is less than the design strength. If the ratio of the 28-day strength test to the specified 90-day strength is less than 65 percent, make necessary adjustments for conformance.

f. Remove concrete not meeting strength criteria and provide new acceptable concrete at no expense to the government. Repair core holes with non-shrink grout. Match color and finish of adjacent concrete.

G20 1.3.5 Concrete Joint Performance Verification

Install a test section of 500 linear feet (150 m) at start of sealing operation for each type sealant to be used. Obtain approval of test section by Contracting Officer prior to installing additional joint seal. Joint sealer that fails to cure properly, or fails to bond to joint walls, or reverts to uncured state or fails in cohesion, or shows excessive air voids, blisters, or has surface defects, swells, or other deficiencies, or is not recessed within indicated tolerances shall be rejected. Remove rejected sealer and reclean and reseal joints.

G20 1.3.6 Topsoil Performance Verification

Prior to planting design, provide a commercial soil analysis. Amend planting areas based on the soil test's interpretation, amendment type, and quantity recommendations (including soil nutrients and texture, with percentages shown). Additional topsoil shall be used only in areas where soil analysis shows that the existing soil is inadequate for growth of plant materials.

G20 1.4 DESIGN SUBMITTALS

Design Submittals shall be in accordance with UFC 1-200-01, General Building Requirements, UFGS section 01 33 10.05 20, *Design Submittal Procedures*, UFC 1-300-09N, *Design Procedures*, and UFC 3-200-10N, *Civil Engineering*.

In addition, UFGS sections listed below or in the body of the PTS text are to be used by the Designer of Record (DOR) as a part of the design submittal. If the UFGS products or systems are applicable to the project, the DOR shall edit these referenced UFGS sections and submit them as a part of the design submittal specification. Edit the specification sections in accordance with the limitations stated in PTS section Z10, *General Performance Technical Specifications*.

32 11 26.16, *Bituminous Concrete Base Course*

32 11 36.13, *Lean Concrete Base Course*

32 11 16.16, *Base Course for Rigid and Sub-base Course for Flexible Paving*

32 11 24, *Graded Crushed Aggregate Base Course for Flexible Pavement*

32 11 16.13, *Base Course*

32 12 17, *Hot Mix Bituminous Pavement*

32 13 13.16, *Portland Cement Concrete Pavement for Roads and Site Facilities*

G20 1.5 CONSTRUCTION SUBMITTALS

Provide product data for all exterior furnishings.

Submit construction submittals in accordance with PTS Section Z10, *General Performance Technical Specifications*. In addition to the Z10 requirements, the Designer of Record (DOR) shall approve the following construction submittals as a minimum:

G20 1.5.2 As-Builts

Submit a complete set of irrigation as-builts to the Contracting Officer, to include the recording of measurements onto a record set of full-size project irrigation plans. Measurements shall locate water meters, pressure supply lines at 100 foot (30 m) intervals, backflow prevention devices, rain/freeze sensors, valves (including quick couplers and hose bibbs), controllers (and control wire, if routed separately from pressure supply line); all dimensioned from two permanent points of reference, such as building corners, sidewalks, and other permanent features.

G20 1.6 ANTITERRORISM (AT) STANDARDS

INCORPORATE THE MINIMUM AT STANDARDS INDICATED IN UFC 4-010-01, *DOD MINIMUM ANTITERRORISM STANDARD FOR BUILDINGS*.

G20 1.7 PROJECT LIMITATIONS

Prior to the start of design, the Contractor shall determine the exact limit-of-work line for the project periphery, considering items such as, but not limited to, utility work, landscape revegetation of disturbed areas, and laydown areas. The Designer of Record shall determine limit-of-work lines.

G2010 ROADWAYS

G2010 1.1 PAVEMENT DESIGN

Provide geometric and pavement design, including minimum pavement sections, in accordance with UFC 3-200-10N, *Civil Engineering*. Provide pavement calculations in accordance with UFC 1-300-09N, *Design Procedures*. Provide any required additional pavement design to provide a complete and useable facility.

For pavements subject to aircraft traffic or aircraft ground support equipment traffic consult Government Civil Reviewer for design criteria and requirements. State Department of Transportation standards are not acceptable for airfield pavements.

G2010 1.2 PAVEMENT AESTHETICS

Provide surfaces consistent in color and finish.

G2010 1.3 LANDSCAPING

Designs for streets and roads shall include adequate space for trees and other landscape material.

G2010 1.4 TRAFFIC CONTROL DEVICES

New traffic control devices (i.e., signs and markings) shall be provided and installed in accordance with the United States Department of Transportation Federal Highway Administration's *Manual on Uniform Traffic Control Devices* and their standard, "Rigid Sign Supports". New traffic control devices shall also be provided along/in the existing streets adjacent to the project site as necessary to provide complete traffic control to the new facilities.

G2010 1.5 EXISTING UTILITY STRUCTURES

Existing utility structures shall be adjusted to meet the new finished pavement grades as required.

G201001 BASES & SUBBASES

Prepare sub-grade in accordance with Section G10, *Site Preparation*. Geo-textiles may be used for separation or reinforcement in accordance with manufacturer's instructions. Provide base course under paved areas in accordance with UFC 3-250-01FA, Pavement Design for Roads, Streetwalks and Open Storage Areas.

Place base course in accordance with the Unified Facilities Criteria for that particular base course and in layers of equal thickness with no compacted layer more than 6 inches (150 mm) thick. Compact base course at optimum moisture content to 100 percent ASTM D 1557 maximum dry density.

Where UFC are not available or applicable, the Designer of Record shall utilize the applicable UFGS Specification Sections referenced under paragraph

1.1.2 entitled "Government Standards" for the project specification. Submit these specifications in edited form as a part of the design submittal for the project.

G201002 CURBS & GUTTERS

Provide concrete curbs and gutters in accordance with the standards specified in UFC 3-200-10N, Civil Engineering, whichever is more stringent. Where the UFC do not include concrete materials for curbs and gutters, provide concrete in accordance with the applicable standard mix of the UFC 3-200-10N for a minimum compressive strength at 28 days of 3500 psi (25 MPa) concrete.

G201003 PAVED SURFACES

The Designer of Record shall utilize the applicable UFGS Specification Sections referenced under paragraph 1.1.2 entitled "Government Standards" for the project specification. Submit these specifications in edited form as a part of the design submittal for the project.

G201003 1.1 PAVEMENT MIX

G201003 1.1.1 Bituminous Concrete Pavement

Provide bituminous concrete pavement in accordance with the applicable standard mix of the UFC based on the pavement design and vehicle loading indicated in this RFP.

G201003 1.1.1.1 Bituminous Concrete Placement

Bituminous concrete placement, including minimum temperature during placement, joints, and maximum lift thickness shall be in accordance with the UFC. Compact bituminous concrete in accordance with the UFC, modified to 96 percent of maximum laboratory density.

G201003 1.1.2 Portland Cement Concrete Pavement

If reinforced, the welded wire fabric shall conform to ASTM A 185. Bar reinforcement shall conform to ASTM A 615/A 615M, Grade 400 (Grade 60).

Provide concrete in accordance with the applicable standard mix of the UFC 3-200-10N for the design strength plus any allowable deviations.

G201003 1.2 JOINTS FOR PORTLAND CEMENT CONCRETE PAVEMENT

Joints shall be in accordance with UFC 3-200-10N and the applicable portions of TM 5-822-5, *Pavement Design for Roads, Streets, Walks, and Open Storage Areas*. Joints shall be installed in a manner and at such time to prevent random or uncontrolled cracking. Joints shall form a regular rectangular pattern. Wherever curved pavement edges occur, make joints to intersect tangents to curve at right angles.

G201003 1.2.1 Expansion Joints

Provide thickened edge expansion joints at the intersection of two rigid pavements. Use preformed joint filler, ASTM D 1751. Filler must be compatible with joint sealer material. Preformed joint filler shall be securely held in position during concreting operations.

G201003 1.2.2 Isolation Joints

Provide thickened edge isolation joints by placing a 1/2-inch (12 mm) preformed joint filler (ASTM D 1751) around each structure that extends into or through the pavement before concrete is placed at that location.

G201003 1.2.3 Contraction Joints

Joint lines shall be sawed within specified tolerance, straight, and extend for width of transverse joint, and for entire length of longitudinal joint.

G201003 1.2.4 Construction Joints

If an emergency stop occurs remove the concrete back to location of transverse joint and install a construction joint.

G201003 1.2.5 Joint Sealants

ASTM D 5893; Provide single component cold-applied silicone. Silicone sealant shall be self-leveling and non-acid curing.

G201003 1.2.6 Preformed Compression Seals

Use performed compression seals in areas where silicone joint sealant does not perform, such as areas subject to water inundation, blasts, or constant/repeated fuel spillage.

ASTM D 2628. ASTM D 2835, for lubricant.

G201003 1.3 PRIME COAT

Use prime coat in accordance with the TM 5-822-5. Prime coat shall be emulsified asphalt materials.

G201003 1.4 TACK COAT

Tack coat is required for bituminous pavement overlays and on vertical cut faces of pavement patches. Tack coat shall be in accordance with the TM 5-822-5.

G201003 1.5 PAVEMENT PATCHES

Provide pavement patches for existing pavements where required for installation of utility trenches. Sawcut 12 inches beyond edge of trench. Thicknesses of pavement materials shall be equal to or greater than the existing pavement section.

For spalls or repairs of existing concrete pavement, perform repairs in conformance with UFC 3-270-03, *O&M: Concrete Crack and Partial Depth Spall Repair*, and UFC 3-270-04, *O&M: Concrete Repair*. Spall repair materials shall be either Rapid Setting Cementitious Concrete (RSCC), epoxy concrete, or polymer-modified Portland Cement (non-sag mortar) products specially formulated for spall repairs, with a proven record (in service at least three years) of satisfactory use under loading and environmental conditions similar to those at the location of intended use. A manufacturer's data sheet and certificate supporting the satisfactory use shall be provided to the Contracting Officer with the design. A product manufacturer's representative shall be present during the initial two days of product application to verify that

manufacturer's instructions for use are adhered to. The Contracting Officer shall be given 7 days notice prior to the initial application in order to be present.

G201004 MARKING & SIGNAGE

G201004 1.1 MARKING

Pavement markings shall be in accordance with the MUTCD. Materials shall be designed for life expectancy of at least 3 years under an average daily traffic count per lane of approximately 9000 vehicles. Water based paints shall have durability rating of at least 4 when determined in the wheel path area.

Provide a half-rate initial marking application on bituminous pavements. Provide the remaining application at the end of the normal curing period.

G201004 1.2 SIGNAGE

Provide signage in accordance with the MUTCD.

G201005 GUARDRAILS & BARRIERS

G201005 1.1 GUARDRAILS

Provide guard (guide) rails in accordance with the UFC 3-200-10N . Where the UFC 3-200-10N do not include materials for guardrails, provide guardrails in accordance with the applicable portions of the *AASHTO Roadside Design Guide*.

G201005 1.2 BOLLARDS

Bollards shall be 4" diameter minimum steel pipe filled with concrete and embedded in a portland cement concrete foundation. Bollards associated with passive barrier systems are specified in Section G204004, "Security Structures".

G201006 RESURFACING

Adjust rims of existing utility structures to match proposed grades after resurfacing.

G201006 1.1 SLURRY SEAL

ASTM D 3910 and in accordance with the UFC 3-200-10N.

G201006 1.2 BITUMINOUS CONCRETE OVERLAY

Remove old pavement by cold milling to depths required to provide new surface and leave underlying materials intact. Clean the pavement of excessive dirt, clay or other foreign matter with power brooms and hand brooms immediately prior to the milling operation.

Repair or replace damaged utility structures, valve boxes, or pavement that is torn, cracked, gouged, rutted, broken or undercut at no addition expense to the government.

Provide bituminous concrete overlay produced from hot or cold recycling of the milled material or from virgin materials in accordance with the applicable provisions of UFC 3-200-10N, *Civil Engineering*, and the

standard mix of the UFC 3-200-10N based on the pavement design and vehicle loading as indicated in this RFP.

G201006 1.3 CRACK SEALING

Fiber reinforced crack sealer shall be used for sealing cracks in asphalt pavement after milling and prior to resurfacing. Crack sealing shall conform to the following requirements in UFC 3-270-01, *O&M: Asphalt Maintenance and Repair*, and UFC 3-270-02, *O&M: Asphalt Crack Repair*.

G2020 PARKING LOTS

G202001 BASES & SUBBASES

Refer to Section G201001.

G202002 CURBS & GUTTERS

Refer to Section G201002.

G202003 PAVED SURFACES

Refer to Section G201003.

G202004 MARKING & SIGNAGE

Refer to Section G201004. Provide water-based paints only.

Mark neatly to denote traffic lanes and parking spaces; mark in accordance with the requirements of UFC 3-200-10N, *Civil Engineering*.

G202005 GUARDRAILS & BARRIERS

Refer to Section G201005.

G202005 1.1 WHEELSTOPS

Not Used.

G202006 RESURFACING

Refer to Section G201006.

G2030 PEDESTRIAN PAVING

Locate new sidewalks such that they maintain continuity of pedestrian traffic to and from the existing sidewalks adjacent to the site(s).

G203001 BASES & SUBBASES

Provide as required by local standards or geotechnical report; refer to Section G201001.

G203003 PAVED SURFACES

G203003 1.1 SIDEWALKS

Sidewalks shall be portland cement concrete pavement, 4 inches (100 mm) thick minimum. Provide concrete in accordance with the applicable

standard mix of the TM 5-822-5 for a minimum compressive strength at 28 days of 3500 psi (25 MPa) concrete. Sidewalks shall be at least 5 feet (1.5 meters) wide, except that sidewalks connecting entry points of housing units to the housing unit's parking shall be at least 36 inches (900 mm) wide. Use the maximum percentage of fly ash allowed in the applicable standard mix of the UFC 3-200-10N. In housing areas, offset sidewalks paralleling streets to maintain a minimum grassed separation of 5 feet (1.5 meters) from the back face of the curb to the closest edge of the sidewalk.

Provide a broomed finish. Unless indicated otherwise, provide a transverse slope of 1/48. Limit variation in cross section to 0.25 inch in 5 feet (6 mm in 1.50 m).

G203003 1.1.1 Joints

Provide contraction joints spaced at intervals equivalent to the width of the sidewalk. Provide 0.5 inch (13 mm) thick transverse expansion joints at changes in direction where sidewalk abuts curb, steps, rigid pavement, or other similar structures; space expansion joints every 50 feet (15 m) maximum. Provide isolation joints by placing a 1/2-inch (12 mm) preformed expansion joint filler around each structure that extends into or through the sidewalk before concrete is placed at that location.

G203003 1.2 CONCRETE PAVERS

G203003 1.3 HANDICAPPED RAMPS

Provide handicapped ramps of portland cement concrete pavement with a minimum compressive strength at 28 days of 3500 psi (25 MPa) and an exposed aggregate finish, truncated domes, or as required by the ADA-ABA at roadway intersections.

G203004 GUARDRAILS & BARRIERS

Refer to Section G201005.

G2040 SITE DEVELOPMENT

G204001 FENCING & GATES

G204001 1.1 ENCLOSURES FOR UTILITY EQUIPMENT

Where fencing is used to provide an enclosure for utility equipment, ensure a minimum clearance is provided no less than 3 feet (900 mm) around the equipment to permit maintenance access and ventilation. Provide stone, gravel or concrete paving within the enclosure.

G204002 RETAINING WALLS AND FREESTANDING WALLS

Not Used.

G204003 EXTERIOR FURNISHINGS

Refer to ESR G20 and other portions of the RFP for exterior furnishings required on this project. All site furnishings shall be permanently attached to concrete pads. Site furnishings shall conform to the Base Exterior Architecture Plan (BEAP) and or Installation Appearance Plan for each Activity. If no product guidance is given, coordinate material, finish and color with architecture (fiberglass and aluminum are not acceptable) and provide to the greatest extent possible, materials with industrial recycled

content, preferably from regionally local manufacturers.

G204003 1.1 PICNIC AND PASSIVE RECREATION AREAS

Not Used.

G204003 1.2 TRASH RECEPTACLES

Not Used.

G204003 1.3 BENCH

Not Used.

G204003 1.4 RECYCLING RECEPTACLES

Not Used.

G204004 SECURITY STRUCTURES

Where identified for project elsewhere in this RFP, provide active and passive vehicle barriers to effectively stop or detect penetration by explosive-laden vehicles through the perimeter of a protected area in accordance with MIL-HDBK-1013/14, *Selection and Application of Vehicle Barriers*.

G204005 SIGNAGE

Provide facility signage as required by local code, the Installation and Appearance Guide, the Base Exterior Architectural Plan (BEAP) and this RFP.

Size messages and graphics on signs according to the functional viewing distance. Typically, at least 1 inch (25 mm) of letter height per 25 feet (7.62 meters) of viewing distance is required for readability.

Refer to Section G201004, "Marking & Signage" for traffic signage.

G204007 PLAYING FIELDS

G204007 1.1 PLAYGROUNDS

G204090 OTHER SITE IMPROVEMENTS

Other site improvements shall conform to the BEAP or Installation Appearance Plan (whichever is applicable) and to the requirements of UFC 4-010-01.

G204090 1.1 DUMPSTER PADS AND ENCLOSURES

G2050 LANDSCAPING

G205001 FINE GRADING AND SOIL PREPARATION

See Section G10, Site Preparation.

G205002 EROSION CONTROL MEASURES

See Section G10, Site Preparation.

G205003 TOP SOIL AND PLANTING BEDS

See paragraph titled, G205005 PLANTINGS.

G205004 SEEDING, SPRIGGING, AND SODDING

Areas that are to be seeded that are larger than 1,000 square feet (92.90 square meters) shall be hydroseeded. Hydroseed mix composition shall be appropriate for surrounding land use and compatible and consistent with local application rates, seed availability and established practice in the project area. If project dates are unknown, specify required planting dates or alternative species for different seasons. Apply seed at a time best suited for germination of the selected species. Seeded areas shall achieve a 95-percent coverage of the selected species and be

G205005 1.3 RECYCLING

Green waste: Contact the Public Works Department for potential green waste collection and hauling by the Government. Green waste not collected by the Government shall be separated from construction debris and delivered to the base's or local landfill's green waste recycling area. Quantify and report diverted waste to the Contracting Officer.

-- End of Section --

SECTION G30

SITE CIVIL/MECHANICAL UTILITIES
11/10

G30 GENERAL

RFP Part 3 including the Engineering System Requirements (ESR) provide project specific requirements. The RFP Part 4 Performance Technical Sections (PTS) provide generalized technical requirements that apply to multiple facility types and include more requirements than are applicable to this project. Therefore RFP Part 4 requirements that correspond and further define the RFP Part 3 requirements are specific to this project, other RFP Part 4 requirements are not required.

G30 1.1 DESIGN GUIDANCE

Provide the design and installation in accordance with the following references. This Performance Technical Specification (PTS) adds clarification to the fundamental requirements contained in the following Government Standards. The general requirements of this PTS section are located in PTS Section Z10, *General Performance Technical Specification*.

G30 1.1.1 Industry Standards and Codes

AMERICAN SOCIETY OF MECHANICAL ENGINEERS (ASME)

G30 1.1.2 Government Standards

UNIFIED FACILITIES CRITERIA (UFC)

UFC 1-200-01	General Building Requirements(A reference in this PTS section to UFC 1-200-01 requires compliance with the Tri-Service Core UFCs that are listed in UFGS Section 01 33 10.05 20, which includes the following significant UFC(s):UFC 3-200-10N, Civil Engineering UFC 3-400-10N, Mechanical Engineering)
UFC 3-800-10N	Environmental Engineering for Facility Construction

G30 1.2 QUALITY ASSURANCE

Materials and assemblies installed in the work shall be inspected and found to be in compliance with industry standards and these specifications prior to acceptance of the work. Items found not to be in compliance shall be removed, or corrective measures taken, to assure compliance with the referenced standard. The Contractor shall perform field tests and provide labor, equipment and incidentals required for testing.

G30 1.3 PERFORMANCE VERIFICATION AND ACCEPTANCE TESTING

Compliance with the requirements will be determined by a review of the

design and construction submittals and by field inspection. See Section 01 33 10.05 20, *Design Submittal Procedures*, and Section 01 33 00.05 20, *Construction Submittal Procedures*, for additional requirements.

Verification of satisfactory utility system performance shall be via Performance Verification Testing, as detailed in this section of the RFP. Verification of satisfactory performance shall also be via testing as detailed in the paragraph, "Field Quality Control", in applicable UFGS Specification Sections utilized.

G30 1.3.2 Water Distribution System Verification Testing

Provide testing on service lines in accordance with the state waterworks' regulations and the following:

a. Ductile Iron and other materials: AWWA C600.
b. PVC: AWWA C605.

Do not begin testing on any section of a pipeline where concrete thrust blocks have been provided until at least 5 days after placing of the concrete.

G30 1.3.4 Sanitary Sewer Distribution System Verification Testing

Provide testing on laterals in accordance with the state sewerage regulations.

G30 1.3.4.2 Leakage Tests

G30 1.4 DESIGN SUBMITTALS

Design Submittals shall be in accordance with UFGS section 01 33 10.05 20, *Design Submittal Procedures*, UFC 1-300-09N, *Design Procedures*, UFC 3-200-10N, *Civil Engineering*, and UFC 3-400-10N, *Mechanical Engineering*.

G30 1.5 CONSTRUCTION SUBMITTALS

Submit construction submittals in accordance with PTS Section Z10, *General Performance Technical Specifications*. In addition to the Z10 requirements, the Designer of Record (DOR) shall approve the following construction submittals as a minimum:

All test reports.

G30 1.6 COORDINATION

To the extent that site work is indicated on the RFP drawings, the Contractor shall verify that the locations and inverts of all site utility lines are coordinated with building utility lines. If necessary, the Contractor shall make adjustments to the locations and inverts indicated on the RFP drawings in accordance with applicable codes and standards.

G30 1.7 ANTITERRORISM (AT) STANDARDS

Incorporate the minimum AT standards indicated in UFC 4-010-01, *DoD Minimum Antiterrorism Standards for Buildings*.

G30 1.8 BACKFLOW PREVENTION

The Contractor shall submit backflow prevention training certificates

and backflow preventer devices certification in accordance with Section 01 50 00.05 20 (01501N), *Temporary Facilities and Controls for Design-Build*.

G30 1.11 EXCAVATION, BACKFILLING AND COMPACTION OF UTILITIES

Refer to Section G10, *Site Preparation*.

G30 1.12 DELIVERY, STORAGE AND HANDLING OF MATERIALS

Inspect materials delivered to site for damage. Unload and store with minimum handling. Store materials on site in enclosures or under protective covering. Store plastic piping, jointing materials and rubber gaskets under cover out of direct sunlight. Do not store materials directly on the ground. Keep inside of pipes, fittings, valves, and hydrants free of dirt and debris. Handle in a manner to ensure delivery to the trench in sound undamaged condition. Take special care to avoid injury to coatings and linings on pipe and fittings; make satisfactory repairs if coatings or linings are damaged. Carry, do not drag pipe to the trench.

G3010 WATER SUPPLY

G3010 1.1 WATER SYSTEM DESIGN

The Contractor shall determine domestic and fire demands for the facility and shall verify the design of all components of the domestic and fire protection supply systems. The water system design and construction shall be in accordance with UFC 3-200-10N, *Civil Engineering*, the state waterworks' regulations, and the utility provider's requirements. Design the water supply systems to provide required flows and maintain residual pressures based upon peak demands.

If the new water system is an extension of an existing water system, the Contractor shall obtain all necessary static pressure, residual pressure and flow characteristics of the existing distribution system by actual field tests. The Contractor shall conduct flow and pressure tests and provide design calculations that show the existing lines are capable of handling the additional flows. The new water system shall connect to the nearest existing fitting or water line.

The Contractor shall design the connections to the water system including the necessary meter assemblies and backflow-preventing devices in accordance with the requirements of the Activity or utility provider and the state waterworks regulations.

Wherever possible, valve boxes and all other utility access structures shall be located out of paved areas.

G301001 1.1 WATER METER

Provide a water meter on the well pump discharge piping aboveground in a pump enclosure or in a meter vault underground. Provide type of water meter and remote reading capability in accordance with system owner's preferences and requirements: AWWA C700, displacement type; AWWA C701, turbine type; or AWWA C702, compound type.

G301002 1.1 WATER SYSTEM DESIGN

Provide all materials, equipment, labor, testing, and miscellaneous related items for water distribution mains and service lines to the

facility and connections to the existing water system in accordance with UFC 3-200-10N, *Civil Engineering*; the utility provider's requirements; and the state waterworks' regulations; whichever is more stringent.

Available flow at the residual pressure at each point of connection shall be determined by conducting flow tests in accordance with AWWA M17 and NFPA 291.

Water main piping, service lines, fittings, valves, accessories and all other materials shall meet the American Water Works Association (AWWA) standards for a minimum system working pressure of 150 psi (1050 kPa).

G301002 1.2 WATER DISTRIBUTION MAINS

Not Used.

G301002 1.3 WATER SERVICE LINES

Water service lines less than 4 inches (100 mm) in diameter shall be copper tubing, PVC, or polyethylene (PEX) tubing. Water service lines 4 inches (100 mm) and 6 inches (150 mm) in diameter shall be ductile iron pipe and PVC pressure pipe; see G301002, paragraph 1.2, "Water Distribution Mains" for additional requirements for ductile iron and PVC piping.

G301002 1.3.1 Materials

a. Copper Tubing

1) Pipe: ASTM B 88M (ASTM B 88), Type K.

2) Fittings for Solder-Type Joint: ANSI B16.8 or ASME B16.22.

3) Fittings for Compression-Type Joint: ASME B16.26, flared tube type.

b. PVC Pressure Pipe

1) Pipe: ASTM D1785, Schedule 40 or ASTM D 2241, with SDR rating for 160 psi (1.1 MPa) pressure rating.

2) Fittings: ASTM D 2466.

3) Joints: Elastomeric gaskets for pressure rating; solvent cement joints, ASTM D 2564.

c. Polyethylene Tubing: AWWA C901.

G301002 1.3.2 Service Connections

Connect service lines 2-inch (50 mm) diameter or less to the main by a corporation stop and install a gate valve on service line below the frostline.

a. Ductile-iron water mains: AWWA C600.
b. PVC water mains: UBPPA UNI-B-8 and the recommendations of AWWA M23, Chapter 9, "Service Connections."

G301002 1.3.3 Installation

Install pipe, fittings and accessories in accordance with manufacturer's instructions.

a. Metallic Piping: applicable requirements of AWWA C600.
b. PVC: applicable requirements of ASTM D 2774 and ASTM D 2855.
c. Polyethylene: applicable requirements of ASTM D 2774 and ASTM F 645.

G301002 1.4 CORROSION PROTECTION

G301002 1.4.1 Insulating Joints

Provide insulating joints to prevent contact between dissimilar metals at the joint between adjacent sections of piping in accordance with the pipe manufacturer's recommendations. Ensure that there is no metal-to-metal contact between dissimilar metals after the joint has been assembled.

To prevent the possibility of bi-metallic corrosion, service lines of dissimilar metal to the water mains and the attendant corporation stops shall be wrapped with polyethylene or suitable dielectric tape for a minimum clear distance of 3 feet (900 mm) from the main.

G301002 1.5 VALVES

Valves shall be the same diameter and have the same joint ends as the mains to which they are installed. Each type of valve shall be of one manufacturer.

G301002 1.5.1 Gate Valves

G301002 1.5.1.1 Location

Valves shall be installed at all new points of connection. At a minimum, valves shall be located to ensure that no more than two fire hydrants will be out of service in the event of a single break in a water main. Valves shall be located outside of pavement and heavy traffic areas whenever possible.

G301002 1.5.1.2 Gate Valves 3-inch (75 mm) and Larger in Diameter

a. Valves (20-inch and smaller in diameter): AWWA C509 or AWWA C515, nonrising stem and of one manufacturer.
b. Valves (greater than 20-inch in diameter): AWWA C500.
c. Valves for Indicator Post: AWWA C500 with indicator post flange in accordance with applicable requirements of UL 262.
d. Interior Coating: AWWA C550.

G301002 1.5.1.3 Gate Valves Smaller than 3-inch (75 mm) in Diameter

MSS SP-80, Class 150, solid wedge. Valves shall have flanged or threaded end connections, with unions on both sides of the valve and a handwheel operator.

G301002 1.5.1.4 Valve Box

Provide a cast iron, adjustable, valve box for each gate valve on buried piping. Valve boxes shall be of a size suitable for the valve on which it is to be used with a minimum diameter of 5-1/4 inches (130 mm). Provide a round

head and cast the word "WATER" on the lid.

G301002 1.5.2 Check Valves

Valves sized 2-inches (50 mm) to 24-inches (600 mm) shall be swing-check type (AWWA C508) and have a protective epoxy interior coating conforming to AWWA C550. For underground applications, provide check valve in a valve vault.

G301002 1.5.3 Air Release, Air/Vacuum, and Combination Air Valves

AWWA C512 and AWWA M51.

G301002 1.5.4 Corporation Stops

If service lines 2—inch diameter or less are tapping water mains, provide corporation stops. The corporation stops shall be ground key type, bronze, ASTM B61 or ASTM B62.

G301002 1.5.5 Installation of Valves

Make and assemble joints to valves as specified for making and assembling the same type of joints between pipe and fittings.

G301002 1.6 WATER METERS

Provide water meter and remote reading as required by the utility provider and in accordance with AWWA standards.

G301002 1.7 BACKFLOW PREVENTION

Provide backflow prevention and cross connection control in accordance with AWWA M-14 and governing local/state plumbing codes and waterworks' regulations.

G301002 1.8 FIRE HYDRANTS

Fire hydrants shall all be of one manufacturer. Provide protection for fire hydrants located in areas subject to vehicle damage. Fire hydrants shall have National Standard threads on hose and pumper connections. Provide a 6 inch (150 mm) inlet, two 2.5 inch (62 mm) hose connections and one pumper connection sized to accommodate local fire department equipment requirements. Stencil hydrant number and main size on the hydrant barrel using black stencil paint.

a. Dry Barrel Fire Hydrants: AWWA C502 with frangible sections.
b. Wet Barrel Fire Hydrants: AWWA C503 or UL 246, "Wet Barrel" design, with breakable features.
c. Installation: Install hydrants with the pumper connection facing the adjacent paved surface. If there are two, paved adjacent surfaces, contact the Contracting Officer for further direction.

G301002 1.9 THRUST RESTRAINT

Provide thrust restraint for all piping, valves, fittings, and other appurtenances of the water distribution system.

a. Concrete Thrust Blocks: AWWA C600.
b. Restrained Joints: Pipe manufacturer's recommendations and required length of pipe to be restrained calculated in accordance with UFC 3-200-10N, *Civil Engineering*.

G301002 1.10 DISINFECTION

Disinfect new water piping and existing water piping affected by Contractor's operations in accordance with the state waterworks' regulations and AWWA C651.

G301003 POTABLE WATER STORAGE

G301003 1.1 POTABLE WATER STORAGE TANKS

Not Used.

G301004 FIRE PROTECTION WATER DISTRIBUTION

G301004 1.1 GENERAL REQUIREMENTS

Refer to applicable portions of Section G301002 and Section D40, *Fire Protection Systems*. Water main piping, service lines, fittings, valves, accessories and all other materials shall meet the American Water Works Association (AWWA) standards for a minimum system working pressure of 200 psi (1380 kPa).

G301004 1.2 DETECTOR CHECKS

UL 312; detector check shall include bypass meter, piping, gate valves, check valve and connections to detector check valve. Set valve to allow minimal water flow through bypass meter when major water flow is required.

G301004 1.3 FIRE DEPARTMENT CONNECTIONS

Provide Fire Department Connection at nearest Fire Truck accessible pavement in accordance with UL 405.

G301004 1.4 INDICATOR POSTS

Provide indicator post in accordance with UL 789.

G301005 FIRE PROTECTION WATER STORAGE

Refer to G301003.

G301006 NON-POTABLE WATER DISTRIBUTION

Refer to G301002; note that system disinfection is not required.

G301007 PUMPING STATIONS

Not Used.

G3020 SANITARY SEWER

G3020 1.1 GENERAL REQUIREMENTS

The gravity sanitary sewage collection system shall be designed and constructed in accordance with UFC 3-200-10N, *Civil Engineering*, and the state sewer collection and treatment regulations. The new sanitary sewage collection system shall connect to the nearest existing sanitary manholes and/or sanitary lines adjacent to the project site. The Contractor shall provide design calculations that show the existing

system is capable of handling the additional flows.

In areas where chemicals and other substances may be stored (including mechanical and electrical rooms), it is recommended that the floor drains be eliminated or provisions made to prevent spills from entering the sanitary sewer system. If there is process flow from equipment, discharge can be hard piped, with air gap, to the sanitary sewer.

Wherever possible, manholes and all other utility access structures shall be located out of paved areas.

G302001 SANITARY SEWER PIPING

G302001 1.1 GENERAL REQUIREMENTS

Provide all materials, equipment, labor, testing, and miscellaneous related items to provide sanitary sewage lines necessary for distribution and services to the buildings.

G302001 1.2 GRAVITY SEWER PIPING

Gravity sewer mains and laterals shall be PVC sewer pipe and fittings, except under roadways or at depths greater than 10 feet (3.0 m) where ductile iron pipe shall be provided.

G302001 1.2.1 Materials

a. PVC Gravity Sewer Pipe

1) Piping and Fittings: ASTM D 3034, SDR 35.

2) Joints: ASTM D 3212 and ASTM F 477.

b. Ductile Iron Gravity Sewer Pipe

1) Piping: ASTM A 746. Provide required Thickness Class based on design information and methods in ASTM A 746.

2) Fittings: AWWA C110 or AWWA C153.

3) Joints: AWWA C111.

4) Interior Coating: AWWA C104.

5) Exterior Protection (if required): AWWA C105, polyethylene encasement.

G302001 1.2.2 Connections to Existing Lines

Obtain approval from the Contracting Officer before making a connection to an existing line. Conduct work so that there is minimum interruption of service on existing line and provide a new manhole at the connection point.

G302001 1.2.3 Installation

Install pipe, fittings and accessories in accordance with manufacturer's instructions.

a. PVC: ASTM D 2321. Do not use ASTM D 2321 Class IV or V materials for bedding, haunching or initial backfill materials.

b. Ductile Iron: AWWA C600.

G302001 1.3 PIPING FOR CLEANOUTS

G302001 1.3.1 Materials

a. Cast-Iron Soil Pipe for Cleanouts

1) Pipe: ASTM A 74, service.

2) Joints: ASTM C 564 compression-type rubber gaskets.

3) Exterior Protection (if required): AWWA C105, polyethylene encasement.

G302001 1.3.2 Installation

Install cast iron pipe and fittings in accordance with the recommendations of the pipe manufacturer.

G302002 1.1 CONNECTIONS TO EXISTING MANHOLES

Pipe connections to existing manholes shall be centered on the manhole. Holes for the new pipe shall be of sufficient diameter to allow packing cement mortar around the entire periphery of the pipe but no larger than 1.5 times the diameter of the pipe. Cutting the manhole shall be done in a manner that will cause the least damage to the walls.

G302002 1.2 CLEANOUTS

Construct cleanouts of cast iron soil pipe and fittings; see G302001, paragraph 1.3.

G303002 STORM SEWER STRUCTURES

G303002 1.1 GENERAL REQUIREMENTS

Provide all materials, equipment, labor, testing, and miscellaneous related items for the drainage structures in accordance with the following:

a. Structure rim elevations shall be set flush with finished surface of paved areas or 1 inch (25 mm) above finished grade in unpaved areas.
b. Resilient connectors for making joints between manhole and pipes entering manhole shall conform to ASTM C 923M (ASTM C 923).
c. Provide precast or cast-in-place concrete drainage structures, except cast-in-place concrete is required for airfield drainage structures, headwalls and gutters.

G303004 CULVERTS

Culverts less than 12 inches (300 mm) in diameter shall be PVC or ductile iron. Culverts 12 inches (300 mm) and larger in diameter shall be reinforced concrete or corrugated steel; corrugated aluminum and HDPE pipe may only be used when written approval is received by the Government's Civil Reviewer or indicated in another part of the RFP.

Flared end sections shall the same material as pipe material.

Provide erosion control riprap in accordance with the State Highway Specifications (SHS) and standards where the project is located.

See G303001, paragraphs 1.1.1 and 1.1.2 for material and installation requirements.

G303005 HEADWALLS

Provide cast-in-place concrete headwalls in accordance with the State Highway Specification (SHS) and standards where the project is located.

G303006 EROSION & SEDIMENT CONTROL MEASURES

Refer to Section G103011.

G303007 STORMWATER MANAGEMENT

G303007 1.1 STORMWATER COLLECTION AND STORAGE

Provide permanent detention/retention ponds and other drainage features to regulate stormwater runoff and to prevent damage to the site and off-site. Integrate permanent stormwater management ponds, swales, and other stormwater management features, into the total site design to provide an aesthetically pleasing and harmonious landscape. Develop and construct the ponds and other drainage features in accordance with UFC 3-200-10N, *Civil Engineering*, and the state stormwater management Laws and Regulations.

-- End of Section --

SECTION G40

SITE ELECTRICAL UTILITIES
11/10

G40 GENERAL

RFP Part 3 including the Engineering System Requirements (ESR) provide project specific requirements. The RFP Part 4 Performance Technical Sections (PTS) provide generalized technical requirements that apply to multiple facility types and include more requirements than are applicable to this project. Therefore RFP Part 4 requirements that correspond and further define the RFP Part 3 requirements are specific to this project, other RFP Part 4 requirements are not required.

G40 1.1 NARRATIVE

This section covers installations exterior to the facility up to the five foot line. See PTS Section D50, *Electrical*, for continuation of systems into the building.

G40 1.2 ELECTRICAL DESIGN GUIDANCE

Provide the design and installation in accordance with the following references. This Performance Technical Specification (PTS) adds clarification to the fundamental requirements contained in the following Government Standards. The general requirements of this PTS section are located in PTS Section Z10, *General Performance Technical Specification*.

When all product Quality Control information is included in the Unified Facility Criteria (UFC) and there are requirement options identified in the ESR, then the Uniformat Level 4 titles (and possible subtitles) are included without additional verbiage. One example of this is G401008, GROUNDING SYSTEMS.

G40 1.2.1 Government Standards

UNIFIED FACILITIES CRITERIA (UFC)

UFC 1-200-01	General Building Requirements(A reference in this PTS section to UFC 1-200-01 requires compliance with the Tri-Service Core UFCs that are listed in UFGS Section 01 33 10.05 20, which includes the following significant UFC(s):UFC 3-501-01, Electrical Engineering)
UFC 3-570-02N	Electrical Engineering Cathodic Protection

UNIFIED FACILITIES GUIDE SPECIFICATIONS (UFGS)

UFGS 26 11 13.00 20	Primary Unit Substation
UFGS 26 11 16	Secondary Unit Substations
UFGS 26 12 19.10	Three-Phase Pad-Mounted Transformers

UFGS 26 12 19.20	Single-Phase Pad-Mounted Transformers
UFGS 26 13 00.00 20	SF6 Insulated Pad-Mounted Switchgear
UFGS 26 23 00	Switchboards and Switchgear
UFGS 33 71 01.00 20	Overhead Transmission and Distribution

G40 1.3 QUALITY ASSURANCE

Qualifications, certifications, and Test Plans indicated herein shall be submitted 45 calendar days prior to the expected date of execution. Notify the Contracting Officer 14 calendar days prior to all testing. Submit test results within 7 calendar days of completion of testing.

The Designer of Record is responsible for approving the submittals listed below.

G40 1.3.1 Qualified Testing Organization

Contractor shall engage the services of a qualified testing organization to provide inspection, testing, calibration, and adjustment of the electrical distribution system and equipment listed in paragraph entitled "Acceptance Tests and Inspections" herein. Organization shall be independent of the supplier, manufacturer, and installer of the equipment. The organization shall be a first tier subcontractor.

a. Submit name and qualifications of organization. Organization shall have been regularly engaged in the testing of electrical materials, devices, installations, and systems for a minimum of 5 years. The organization shall have a calibration program, and test instruments used shall be calibrated in accordance with NETA ATS.
b. Submit name and qualifications of the lead engineering technician performing the required testing services. Include a list of three comparable jobs performed by the technician with specific names and telephone numbers for reference. Testing, inspection, calibration, and adjustments shall be performed by an engineering technician, certified by NETA or the National Institute for Certification in Engineering Technologies (NICET) with a minimum of 5 years' experience inspecting, testing, and calibrating electrical distribution and generation equipment, systems, and devices.

G40 1.3.2 NEC Qualified Worker

Provide in accordance with NFPA 70. Qualified Workers shall be allowed to be assisted by helpers on a 1 to 1 ratio, provided such helpers are registered in recognized apprenticeship programs. Submit a certification confirming NEC Qualified Worker requirements.

G40 1.3.3 Qualified Medium Voltage Electrician

All workers on medium voltage electrical crews shall have 5 years experience working medium voltage systems on similar projects

involving the same or higher voltage.

G40 1.3.4 Qualified Cable Splicer (Medium Voltage Cable)

The cable splicer/terminator must have a certification from the National Cable Splicing Certification Board (NCSCB) in the field of splicing and terminating shielded medium voltage (5 kV to 35 kV) power cable using pre-manufactured kits (pre-molded, heat-shrink, cold-shrink). Proof of certification for the individuals that will be performing cable splicer and termination work shall be submitted 30 days before splices or terminations are to be made.

G40 1.3.5 Qualified Cable Splicer (Telecommunications)

Certification shall include the training, and experience of the individual on specific type and classification of telecommunications cable to be provided under this contract.

G40 1.3.6 Qualified Cable Installer and Splicer (Fiber Optic Cable)

Certification shall include the training, and experience of the individual on specific type and classification of Fiber Optic media to be provided under this contract.

G40 1.3.7 Qualified Fiber Optic (FO) Cable Manufacturer

The FO media manufacturer shall have a minimum of 3 years experience in the manufacturing, assembly, and factory testing of FO media that complies with RUS REA Bull 1753F-601 (PE-90). Manufacturer shall provide a list of customers with 3 years of maintenance logs documenting experience with government customers.

G40 1.3.8 Material Standards

Ensure service support and provide manufacturer's nameplate in accordance with PTS Section Z10, *General Performance Technical Specification*.

G40 1.3.8.1 Warning Labels

Each enclosure of electrical equipment, including substations, pad-mounted transformers, pad-mounted switches, pad-mounted sectionalizing termination cabinets, and switchgear, shall have a warning label identifying the enclosure as 1) containing energized electrical equipment and 2) an arc flash hazard.

G40 1.3.9 Factory Testing

The Government reserves the right to witness all factory testing. The manufacturer shall have a calibration program that assures that all applicable test instruments are maintained within rated accuracy.

G40 1.3.10 Electrical System Startup and Testing

Submit test plans for approval. The test plans shall be tailored to the systems provided.

The test plan shall list make and model and provide functional

description of the test instruments and accessories and shall describe the setup of the tests to be conducted. Test instruments shall be capable of measuring and recording or displaying test data at a higher resolution and greater accuracy than specified for the equipment's performance.

G40 1.3.10.1 Factory Trained Engineer

Provide a factory trained engineer to supervise start-up and testing as required in referenced specifications.

G40 1.3.10.2 Performance Verification Testing

The Contractor shall show by demonstration in service that all circuits and devices are in operating condition. Tests shall be such that each item of control equipment will function not less than five times. The Contractor shall provide all necessary test equipment, tools, fuel, load banks, labor, and materials for testing. As a minimum, all systems shall be tested in accordance with manufacturer's recommendations. Additional testing requirements for the various systems are described with those systems, hereinafter. The Contractor shall assure that all applicable test instruments are maintained within rated accuracy. Dated calibration labels shall be visible on all test equipment.

Submit a separate electrical field test plan in accordance with manufacturer's recommendations and that conforms to NETA ATS for each piece of Electrical Distribution Equipment and System requiring Performance Verification Testing.

The following items identify specific test requirements. Additional test requirements are contained in the applicable UFGS.

a. Cable – Test cable in accordance with the manufacturer's recommendations and NETA ATS. Adhere to precautions and limits as specified in the applicable NEMA/ICEA Standard for the specific cable.
b. Grounding - Test ground systems in accordance with the manufacturer's recommendations and NETA ATS.
c. Site Lighting - Contractor's Quality Control (CQC) representative shall perform a field survey of site lighting systems in accordance with IESNA for acceptance. Show that the lighting system operates in accordance with the user’s requirements and is in accordance with designed levels. Provide certification that the measured lighting levels conform to the design requirements.
d. Telecommunications wiring - Test all cables in accordance with industry standards.

G40 1.3.10.3 Acceptance Tests and Inspections

The Qualified Testing Organization shall provide the Acceptance Tests and Inspections test plan and procedures and perform the acceptance tests and inspections. Test methods, procedures, and test values shall be performed and evaluated in accordance with NETA ATS, the manufacturer's recommendations, and paragraph entitled "Field Quality Control" of each applicable specification section. Tests identified as optional in NETA ATS are not required unless otherwise specified. Equipment shall be placed in service

only after completion of required tests and evaluation of the test results have been completed. Contractor shall supply to the testing organization complete sets of shop drawings, settings of adjustable devices, and other information necessary for an accurate test and inspection of the system prior to the performance of any final testing.

Specific test requirements are contained in the UFGS for equipment.

G40 1.4 DESIGN SUBMITTALS

Design Submittals shall be in accordance with PTS Section Z10, *General Performance Technical Specifications*, UFGS Section 01 33 10.05 20, *Design Submittal Procedures*, UFC 1-300-09N, *Design Procedures*, and UFC 3-501-01, *Electrical Engineering*.

In addition, UFGS sections listed below or in the body of the PTS text are to be used by the Designer of Record (DOR) as a part of the design submittal. If the UFGS products or systems are applicable to the project, the DOR shall edit these referenced UFGS sections and submit them as a part of the design submittal specification. Edit the specification sections in accordance with the limitations stated in PTS Section Z10, *General Performance Technical Specifications*.

UFGS 26 11 13.00 20, *Primary Unit Substation*

UFGS 26 11 16, *Secondary Unit Substations*

UFGS 26 12 19.10, *Three-Phase Pad-Mounted Transformers*

UFGS 26 12 19.20, *Single-Phase Pad-Mounted Transformers*

UFGS 26 13 00.00 20, *SF6 Insulated Pad-Mounted Switch Gear*

UFGS 26 23 00, *Switchboards and Switchgear*

UFGS 33 71 01.00 20, *Overhead Transmission and Distribution*

G40 1.5 CONSTRUCTION SUBMITTALS

Submit construction submittals in accordance with PTS Section Z10, *General Performance Technical Specifications*. In addition to the PTS Section Z10 requirements, the Designer of Record (DOR) shall approve the following construction submittals as a minimum:

OMSI Information for Electrical Equipment (if OMSI Manual for the entire project is not already required); all "G" item submittals listed in the submittals of the specifications sections identified in the Design Submittals paragraph above; and all "G" item submittals listed in Government Surveillance UFGS Section 01 33 00.05 20, *Construction Submittal Procedures*.

Provide certification that all adjustable protective device settings have been set in accordance with the coordination study for the as-built equipment and configuration.

G4010 ELECTRICAL DISTRIBUTION

G401001 SUBSTATIONS

When secondary unit substations are required, the Designer of Record shall utilize UFGS Section 26 11 16, *Secondary Unit Substation*, and UFGS Section 26 23 00, *Switchboards and Switchgear*, for the project specification, and shall submit the edited specification section as a part of the design submittal for the project.

G401002 TRANSFORMERS

When transformers are required, the Designer of Record shall utilize UFGS Section 26 12 19.10, *Three-Phase Pad Mounted Transformers*, UFGS Section 26 12 19.20, *Single-Phase Pad Mounted Transformers*, or UFGS Section 33 71 01.00 20, *Overhead Transmission and Distribution*, for the project specification, and shall submit the edited specification section as a part of the design submittal for the project.

G401003 SWITCHES, CONTROLS AND DEVICES

When switches or control devices are required, the Designer of Record shall utilize UFGS Section 26 13 00.00 20, *SF6 Insulated Pad Mounted Switchgear*, or UFGS Section 33 71 01.00 20, *Overhead Transmission and Distribution*, for the project specification, and shall submit the edited specification section as a part of the design submittal for the project.

G401004 OVERHEAD ELECTRIC CONDUCTORS

Power line conductors shall be strung in accordance with manufacturer's standard sag and tension recommendations.

G401005 TOWERS, POLES, CROSSARMS AND INSULATORS

Wood poles shall comply with ANSI 05.1 and RUS 1728F-700. Pressure treat poles in accordance with AWPA C1 and AWPA C4 as referenced in RUS 1728F-700. The quality of each pole shall be ensured with "WQC" (wood quality control) brand on each piece or by an approved inspection agency report. Do not use creosote treated poles, lodgepole pine, and western larch pine poles.

Concrete poles shall comply with ANSI loadings for distribution poles.

The size of poles required, class, height and other data, shall be determined by the designer of record to meet requirements of the pole line. Crossarms shall be wood, steel or fiberglass in accordance with industry and local standards. Insulators, cutouts and associated equipment shall be determined by the Designer of Record to meet system requirements.

G401006 UNDERGROUND ELECTRIC CONDUCTORS

Route underground cables to minimize splices. Cable pulling tensions shall not exceed the maximum pulling tension recommended by the cable manufacturer. Medium voltage cable termination shall be suitable for the location installed and meet IEEE Std. 48 Class 1 requirements.

G401007 DUCTBANKS, MANHOLES, HANDHOLES AND RACEWAYS

Concrete manholes and handholes shall be standard type pre-cast concrete. Composite/Fiberglass handholes shall be polymer concrete reinforced with a heavy weave fiberglass reinforcing as indicated. Load ratings of manholes and handholes shall be suitable for the location installed.

G401008 GROUNDING SYSTEMS

G401009 METERING

G401010 CATHODIC PROTECTION SYSTEMS

Cathodic protection systems shall be in accordance with UFC 3-570-02N.

G401011 EQUIPMENT REQUIREMENTS FOR COASTAL AND HIGH HUMIDITY AREAS

G4020 SITE LIGHTING

G402001 EXTERIOR LIGHTING FIXTURES AND CONTROLS

Maintained mean area lighting levels shall be 6 lux (0.5 fc). Lighting uniformity shall be maintained with the following average to minimum (avg/min) uniformity ratios:

a. Highway Lighting, 3:1
b. Secondary Street Lighting, 6:1
c. Residential Streets, 6:1
d. Area And Parking Lighting, 6:1

G402002 SPECIAL SECURITY LIGHTING SYSTEM

G402003 OTHER AREA LIGHTING

G402004 LIGHTING POLES

Poles shall meet Uniform Building Code for street lighting poles, and AASHTO loadings for highway and sports lighting poles taking into account the effective projected areas of the luminaries provided. Poles shall be direct set or anchor-base type designed for use with underground supply conductors.

G402005 UNDERGROUND ELECTRIC CONDUCTORS

Provide in accordance with Paragraph G401006.

G402006 DUCTBANKS, MANHOLES AND HANDHOLES

Handholes and underground conduits for site lighting shall be in accordance with Paragraph G401007.

G402007 GROUNDING SYSTEMS

G4030 SITE COMMUNICATION AND SECURITY

G403001 TELECOMMUNICATIONS SYSTEMS

G403002 CABLE TV SYSTEMS (CATV)

G403003 CABLES AND WIRING

Provide underground copper cable pair in accordance with RUS 345-67. Provide aerial cable in accordance with RUS 345-67 except that it shall be suitable for aerial installation and shall be Figure 8 distribution wire with 6,000 pound (26,700 N) Class A galvanized steel or 6,000 pound (26,700 N) aluminum-clad steel strand. Screen-compartmental core cable shall be filled cable meeting the requirements of RUS 345-67. Fiber optic media shall meet all performance requirements of EIA/TIA-568-A and the physical requirements of ICEA S 87-640 and EIA/TIA-598-A.

G403004 DUCTBANKS, MANHOLES AND HANDHOLES

Provide in accordance with paragraph G401007.

G403005 TOWERS, POLES AND STANDS

Provide in accordance with paragraph G401005.

G403006 TV CAMERAS AND MONITORS

Not Used.

G403007 ELECTRONIC SECURITY SYSTEM (ESS)

Not Used.

G403008 OTHER COMMUNICATION AND ALARM

Provide Mass Notification System.

G403009 GROUNDING SYSTEMS

Provide ground rod and grounding conductor for ground connections at each manhole and handhole.

G4090 OTHER ELECTRICAL UTILITIES

--End of Section--

SECTION Z10

GENERAL PERFORMANCE TECHNICAL SPECIFICATION
11/10

Z10 GENERAL

RFP Part 3 including the Engineering System Requirements (ESR) provide project specific requirements. The RFP Part 4 Performance Technical Sections (PTS) provide generalized technical requirements that apply to multiple facility types and include more requirements than are applicable to this project. Therefore RFP Part 4 requirements that correspond and further define the RFP Part 3 requirements are specific to this project, other RFP Part 4 requirements are not required.

Z10 1.1 NARRATIVE

All Performance Technical Specification (PTS) sections must be used in conjunction with all parts of the Design Build (D/B) Request for Proposal (RFP) to determine the full requirements of this solicitation. This PTS section provides general requirements for the other PTS sections of this RFP and is used in conjunction with the other PTS sections.

Refer to UFGS section 01 33 10.05 20, *Design Submittal Procedures* for the Order of Precedence of the RFP Parts. Requirements listed in the Project Program take precedence over the PTS sections requirements; therefore, requirements identified in the Project Program eliminate options related to that requirement in the PTS sections.

Z10 1.2 DESIGN GUIDANCE

Provide work in compliance with the following design standards and codes, as a minimum. Government standards listed in this RFP take precedence over industry standards.

The PTS Sections reference published standards, the titles of which can be found in the *Unified Master Reference List (UMRL)*on the Whole Building Design Guide at the Unified Facilities Guide Specification (UFGS) Website . The publications referenced form a part of this specification to the extent referenced. The publications are referred to in the section text by the basic designation only. Industry standards, codes, and Government standards referenced in the section text, and not found in the UMRL, are listed at the beginning of the PTS sections.

The advisory provisions of all referenced codes, standards, and specifications shall be mandatory; substitute words such as "shall", "must", or "required" for words such as "should", "may", or "recommended," wherever they appear. The results of these wording substitutions incorporate these code and standard statements as requirements. Reference to the "authority having jurisdiction" for variance from criteria shall be interpreted to mean the "Chief Engineer, NAVFAC" and for contractual obligations on this project shall be interpreted to mean the "Contracting Officer". Comply with the required and advisory portions of the current edition of the standard at the time of contract award.

The following list of codes and standards is not comprehensive and is augmented by other codes and standards referenced and cross-referenced in the RFP.

Z10 1.2.1 INDUSTRY CODES

INTERNATIONAL BUILDING CODE (IBC) as modified by UFC 1-200-01. UFC 1-200-01 applies the IBC to the project and references other commercial standards and UFC criteria that become part of the contract.

Z10 1.2.2 INDUSTRY REQUIREMENTS

WHOLE BUILDING DESIGN GUIDE (WBDG)

WHOLE BUILDING DESIGN GUIDE, Ensure Occupant Safety and Health (Systems Safety Engineering) at http://www.wbdg.org/design/ensure_health.php

Z10 1.2.3 GOVERNMENT STANDARDS

Z10 1.2.3.1 UNIFIED FACILITIES CRITERIA (UFC)

UFC 1-200-01	General Building Requirements(UFC 1-200-01 is a hub document that provides general building requirements and references other critical UFCs. A reference to UFC 1-200-01 requires compliance with the Tri-Service Core UFCs. A complete list of these Tri-Service Core UFCs is located in UFGS section 01 33 10.05 20)
UFC 1-300-09N	Design Procedures

Z10 1.2.3.2 FEDERAL STANDARDS

DoD Architectural Barriers Act Accessibility Standard with DEPSECDEF Memorandum

Occupational Safety and Health Association (OSHA)

Z10 1.3 MATERIALS AND EQUIPMENT REQUIREMENTS IDENTIFICATION

Z10 1.3.1 MATERIALS STANDARD

Refer to the Project Program for identification of Government Furnished Equipment.

The equipment items shall be supported by service organizations that are convenient to the equipment installation in order to render satisfactory service to the equipment on a regular and emergency basis during the warranty period of the contract.

Materials, equipment, fixtures, and other appurtenances shall comply with applicable Underwriters Laboratories, (UL) Inc., American National Standards Institute, Inc., and National Electrical Manufacturer's Association standards or applicable standards of a similar independent testing organization. All materials shall be new, and shall bear the label of Underwriters Laboratories whenever standards have been established and label service is normally and regularly furnished by the agency. All

equipment provided shall be listed and labeled suitable for the specified purpose, environment, and application and installed in accordance with manufacturer’s recommendations. Insulation shall be asbestos free.

Z10 1.3.2 EQUIPMENT NAMEPLATE IDENTIFICATION

Each item of equipment shall have a nameplate bearing the manufacturer's name, address, model number, and serial number securely affixed in a conspicuous place. The nameplate of the distributing agent will not be acceptable.

Z10 1.3.3 FIELD-APPLIED NAMEPLATES

Provide laminated plastic nameplates for each piece of equipment. Each nameplate must identify the function and, when applicable, the number designation of that piece of equipment as used in the design documents. Provide melamine plastic nameplates, 0.125 inch (3 mm) thick, white with black center core.

Z10 1.4 COMMISSIONING

Commission the building systems identified in the Project Program paragraph 2.2.3. Refer to UFGS section 01 45 00.05 20, *Design and Construction Quality Control* for commissioning requirements. Test reports must be certified by the Commissioning Authority (CA), that work is in compliance with requirements of the RFP.

Z10 1.5 PERFORMANCE VERIFICATION AND ACCEPTANCE TESTS

Verification of satisfactory construction and system performance shall be via Performance Verification Testing, Acceptance Tests, and submittal of test reports certified by the Designer of Record (DOR), that work is in compliance with requirements of the RFP. The Government reserves the right to witness all Performance Verification and Acceptance Tests, review data, and request other such additional inspections and repeat tests as necessary to ensure that the work and provided services conform to the stated requirements. Contractor shall pay the cost of all testing.

Refer to each PTS section to identify Performance Verification and Acceptance Testing required by the work specified in that PTS section.

Z10 1.6 SUBMITTALS

Contractor's design submittals that combines design and construction submittals, must jointly comply with UFGS sections 01 33 00.05 20, *Construction Submittal Procedures* and 01 33 10.05 20, *Design Submittal Procedures*. Contractor's construction submittals that submitted separate from the design submittals must comply with UFGS 01 33 00.05 20, *Construction Submittal Procedures*.

Refer to “"Construction Quality Control" in UFGS 01 33 00.05 20, *Construction Submittal Procedures* and 01 45 00.05 20, *Design and Construction Quality Control* to define reviewing and approving Authority of design and construction submittals.

Utilize the same materials and equipment that are approved and provided for an initial facility design, on all follow-on facilities that use the same design with-in this contract. Once the initial facility design is approved by the Government, the Contractor must obtain Government approval to change materials and equipment when designing and

constructing follow-on facilities utilizing the same design.

Z10 1.6.1 DESIGN SUBMITTALS

Design submittals shall be in accordance with Unified Facility Guide Specification (UFGS) section 01 33 10.05 20, *Design Submittal Procedures*, UFC 1-300-09N, *Design Procedures*, and other discipline-specific guidelines listed in the applicable PTS sections.

UFGS Section 01 33 10.05 20, *Design Submittal Procedures* and some PTS sections requires the use of UFGS sections in the development on the contractor originated specification. The Designer of Record (DOR) shall edit the UFGS sections for the project and submit the edited specification as a part of the design submittal. The DOR shall edit the UFGS as follows:

(1) Prepare UFGS Specifications as part of the project specification,

(2) Delete only portions of the UFGS specification that are not applicable to the project,

(3) Edit only the bracketed choices that are within the UFGS specification text,

(4) Edit blank bracketed options to include requirements that exercise prudence and adherence to acceptable industry standards,

(5) Comply with the directions, directives, and requirements of all UFGS Criteria Notes. The UFGS Criteria Notes are typically bordered on the top and bottom by a line of asterisks to highlight their location.

(6) If proprietary information is provided or required to streamline the construction submittal process, include proprietary information in the edited UFGS sections and added to the end of each UFGS section. Confirm that the proprietary products, materials, and systems listed in the specifications are in compliance with the requirements of the RFP.

Z10 1.6.2 CONSTRUCTION SUBMITTALS

Submit for approval to the Designer of Record (DOR), construction submittals, product data, manufacturer's information, shop drawings, and test reports on all materials and systems installed in the project, unless the DOR designates submittal for QC approval. Refer to each PTS section for further construction submittal requirements relating to the work identified in that particular PTS section. Some PTS sections reference UFGS sections that will require more construction submittals for DOR approval than is stated above. Refer to Section 01 33 00.05 20 for the list of construction submittals reserved for Government Approval and Government Surveillance.

--End of Section--

PART FIVE – PRESCRIPTIVE SPECIFICATIONS

(Final RFP Submittal)

Not Used.

PART SIX – ATTACHMENTS

(Final RFP Submittal)

Geotechnical Engineering Report - Attachment A

Building Information Modeling (BIM) – Attachment B

LEED NC V_3 – Attachment C

Life Safety & Fire Protection Analysis - Attachment D

Flow Test Report – Attachment E

Explosive Safety Submission – Attachment F

Drawings – Attachment G

Attachment A

Geotechnical Engineering Report

PACIFIC SOILS ENGINEERING & TESTING

Limited Geotechnical Engineering Services

In Support of the

FY-12 MCAF PROJECT SAKW059101
PRTC – Red Horse Cantonment Operations Facility, Northwest Field, Andersen Air Force Base, Guam

PSE&T Project Number: 427-009R

Prepared For:

N.C. Macario & Associates
P.O. Box 784
Hagatna, Guam 96932

PACIFIC SOILS ENGINEERING & TESTING

GEOTECHNICAL CONSULTANTS

P.O. Box 20670 Guam Main Facility, Guam 96921

Telephone Nos. (671) 646-1489 / 5790 / 3278 • Fax: (671) 646-1288

e-mail: pacificsoils@guam.net

05 April 2011

N.C. Macario & Associates, Inc.
P.O. Box Route 784
Hagatna, Guam 96932

Attention: Mr. Nemencio C. Macario, P.E., S.E.
Mr. Alren Torrillo

Subject: Limited Geotechnical Engineering Services In Support of the
FY-12 MCAF Project SKAW059101
PRTC – Red Horse Cantonment Operations Facility, Northwest Field,
Andersen Air Force Base, Guam
PSE&T Project Number: 427-009R

Hafa Adai Mr. Macario and Mr. Torrillo:

Pacific Soils Engineering & Testing has completed the authorized Limited Geotechnical Engineering Services Report for the subject project. The following report reviews our understanding of the development, discusses exploration procedures, describes existing site and general subsurface conditions, and presents our geotechnical findings and recommendations.

We have enjoyed working with you on this project. Please do not hesitate to contact our office if you have any questions about this report, or if we may be of further service.

Yours very truly,
Pacific Soils Engineering & Testing,

Maria Elizabeth V. Cristi, P.E.
Principal Engineer

Copies submitted: Addressee (2)

PACIFIC SOILS ENGINEERING & TESTING

TABLE OF CONTENTS

SECTION	PAGE
LETTER OF TRANSMITTAL	
EXECUTIVE SUMMARY	i, ii
1.0 INTRODUCTION	1
1.1 Project Information	1
1.2 Purpose and Scope of Evaluation	1
2.0 EXPLORATION AND LABORATORY PROCEDURES	2 - 4
3.0 SITE AND GENERAL SUBSURFACE CONDITIONS	4
3.1 Site Description	4
3.2 Area and Site Geology	4
3.3 General Subsurface Conditions	4
3.4 Groundwater	5
4.0 GEOTECHNICAL RECOMMENDATIONS	5
4.1 General	5
4.2 Site and Subgrade Preparation	6
4.3 Groundwater Conditions	6
4.4 Difficult Excavation	6
4.5 Cut Slope	6
4.6 Structural Fill	6
4.7 Foundation Support	7
4.8 Soil-Supported Slabs	8
4.9 Pavement Support	9
4.10 Modulus of Subgrade Reaction	10
4.11 Seismic Criteria	11
5.0 QUALIFICATIONS OF RECOMMENDATIONS	12
APPENDIX	

Map of Area (Plate 1)
Plot Plan (Boring Location Plan) (Plate 2)
Test Boring Records (5) (Plates A-1A through A-1E)
Summary of Laboratory Test Results (Plate A-2)
Gradation Charts (Plates A-3A through A-3F)
Atterberg Limits (Plate A-4)
Moisture Density Relationships (Plates A-5A and A-5B)
California Bearing Ratio Test (Plates A-6A and A-6B)
Unified Soil Classification System (USCS) Chart (Plate A-7)

EXECUTIVE SUMMARY

Pacific Soils Engineering & Testing has completed the authorized limited Geotechnical Engineering Services at the proposed site of the FY-12 MCAF Project SKAW059101, PRTC – Red Horse Cantonment Operations Facility at Northwest Field, Andersen Air Force Base, Guam, in support of the missions of the 13th U.S. Air Force. Based on our review and analysis, the following summary of our geotechnical findings and recommendations for the project is presented.

- The project site is located along the northern portion of the formerly abandoned Northwest Field. This area is northwest of the existing airfield landing strips. Based on information provided, it is our understanding that this development consists of a 17,600 SF building and improvement to the utility infrastructure and parking areas/driveways.

- The structures are scheduled to be designed as pre-cast or tilt-up walls, surrounded by concrete or bituminous concrete pavements. The height of the structure varies from approximately 15 feet to 30 feet. It is our understanding that the areas to be investigated would be accessible to all equipment prior to the commencement of this field work.

- As the structural loading information was not provided, we assumed typical loads associated with the proposed structural system. We also assume that cuts and fills to establish desired finish grades will be minimal to moderate.

- For this limited exploration, a total of five (5) soil test borings (designated at the building location) were drilled at the project site. Materials and conditions encountered in the borings are described on the Test Boring Records in the Appendix. The boring locations are indicated on the Test Boring Location Plan, Plate 2. The borings encountered reddish brown to white silty coral gravel (GM) soils as the near surface soils, with white silty coral gravel with sand soils as its dominant subsurface strata. Groundwater was not encountered during the time of our field investigation.

- Based on the encountered subsurface conditions and the assumed structural loads, we recommend that the proposed buildings be supported on shallow spread foundations bearing on competent existing coral gravel/limestone soils, white silty coral gravels with sand soils, or on well-compacted structural fill materials.

- Although the presence of cavities (voids) within the subsurface strata was not evident during the time of our field investigation, this formation maybe encountered during earthwork operations. A probing and grouting program, underneath all footing locations, is highly recommended to ensure a stable base for the structure(s). More detailed information is provided in this report.

- As it could be rather excessive to probe the floor slab areas, it is recommended that the floor subgrade be proof-rolled with a very heavy compactor (20 to 30 tons). Areas where any voids or soft elastic silt (MH) soils may be encountered should be over-excavated (the extent to be determined in the field) and replaced with well-compacted structural fill materials.

- We have reviewed the 2009 International Building Code (IBC 2009) criteria for establishing a Site Class Definition per Sections 1613.5.2 and 1613.5.5 for the project site. Based on our analysis using the soil boring information developed for the project, it is our opinion that the average subsurface conditions correspond to Site Class C as described in Table 1613.5.5.

- Based on the information provided regarding the vehicular loading, the following flexible and rigid pavement sections are recommended:

  Parking lots and driveways restricted to moderate automobile traffic and car parking:

Flexible:	2 inches of asphaltic concrete (A/C) wearing course 6 inches of compacted base course
Rigid:	5 inches of Portland Cement Concrete (PCC) Pavement 4 inches of compacted base course

  Parking lots and driveways subjected to the heavier truck traffic, such as forklift and HS-20 loadings:

Flexible:	1 inch of asphaltic concrete (A/C) wearing course 2 inches of asphaltic concrete (A/C) binder course 8 inches of compacted base course
Rigid:	8 inches of Portland Cement Concrete (PCC) Pavement 4 inches of compacted base course

These and other design and construction recommendations are discussed in more detail in the body of the report. If project criteria, elevations, or locations change, we should be permitted to determine if the recommendations contained in this report must be modified.

Limited Geotechnical Engineering Services

FY-12 MCAF PROJECT SAKW059101
PRTC – Red Horse Cantonment Operations Facility,
Northwest Field,
Andersen Air Force Base, Guam

PSE&T Project Number: 427-009R

1.0 INTRODUCTION

1.1 Project Information

The project site is located in Northwest Field at Andersen Air Force Base, which is presently being developed to support the various mission groups of the 13th Air Force.

Based on information provided, it is our understanding that this project is for the design and construction a 17,602 SF PACAF Regional Training Center (PRTC) Red Horse Cantonment Operations Facility. Similar to other buildings constructed within this area, the reinforced concrete structures are expected to be precast or tilt-up wall panels, with Portland Cement Concrete (PCC) or bituminous mixtures (A/C) pavements. The tasks associated with design and construction include excavation, trenching, backfill, grading, reinforced concrete foundations and slabs, vehicle entry doors, structural steel framing and seamless metal framing. Site improvements included in this contract includes paved parking areas and driveways, landscaping and other infrastructure upgrades.

1.2 Purpose and Scope of Evaluation

The purpose of our Limited Geotechnical Engineering Services was to explore subsurface soil conditions at the site and to provide geotechnical recommendations for design and construction of the planned project. The scope of our services included site observations, soil test borings and sampling, engineering evaluation of the field data, and the preparation of this report. The services were provided in general accordance with our accepted proposal dated 07 September 2010.

Specifically, our services were directed to providing information regarding the following:

- Coordination with N.C. Macario & Associates' designated representative during the progress of our work.
- Application of the test boring permit with the Guam Environmental Protection Agency (GEPA). Similar to previous work performed, the other required clearances from the Navy (DZSP-21), Air Force and private companies were provided by your office.
- Drilling a total of five (5) test borings within the proposed structure.
- Obtaining bulk samples of the near surface soil materials at the test boring locations, performing the standard penetration tests (SPT) at frequent depths, and restoring the test borings as much as practical;

- Performing laboratory testing on selected samples obtained during the fieldwork. The anticipated test program would include moisture content determination, Modified Proctor tests, sieve analysis, Atterberg limits, and the California Bearing Ratio (CBR) tests.
- Providing a final report containing recommendations regarding site and earthwork preparation, foundation support, building slabs, Modulus of subgrade reaction "k," pavement support, Seismic Site Classification, and a summary of our field and laboratory findings.

The scope of our services did not include any environmental assessment or investigation for the presence or absence or hazardous or toxic materials in the soil, groundwater, or surface water within or beyond the site. Any statements in this report or on the Test Boring Records regarding odors, staining of soils, or other unusual conditions observed are strictly for the information of our client.

2.0 EXPLORATION AND LABORATORY PROCEDURES

2.1 Site Observations

The site and surrounding areas were visually evaluated by an engineer from our office. His observations were used during the formulation of the recommendations in establishing areas of special interest and in relating site conditions to known geologic conditions in the area.

2.2 Field Exploration

For this limited exploration, a total of five (5) soil test borings (designated at the building location) (Appendix Plot Plan, Plate 2) were performed at the project site. The boring locations are indicated on the Boring Location Plan in the Appendix. The borings were advanced to depths to about 24 feet from the existing ground surface.

Boring locations were established in the field based on the survey information provided by your office. The current ground surface is relatively level, and we did not have a current topographic map at the time of this report. Test Boring Records that graphically depict soil descriptions, penetration resistances and observed groundwater levels are included in the Appendix.

All soil sampling and standard penetration testing were performed in general accordance with ASTM Standard D-1586, Standard Test Method for Penetration Test and Split-Barrel Sampling of Soils. The soil test borings were advanced by mechanically turning hollow-stem augers into the soil. At regular intervals, soil samples were obtained with a standard 1.4-inch I.D., 2.0-inch O.D., split-barrel sampler. The sampler was first seated 6 inches and then driven an additional foot with blows of a 140-pound hammer falling 30 inches.

The number of blows required to drive the sampler the final foot was recorded and is designated the "standard penetration resistance." Because the sampler may be damaged by driving it a foot into very dense soils, it is driven a few inches into such materials and the penetration resistance is expressed as the number of hammer blows versus the depth of penetration, e.g. 100/3", 50/1", etc. Penetration resistance, when properly evaluated, is an index of the soil strength and foundation support capability. The bore holes were backfilled prior to demobilizing from the site.

Representative portions of the soil samples obtained with the split-barrel sampler were sealed in moisture proof containers and transported to our laboratory. In the laboratory, they were examined by a civil/geotechnical engineer and classified in general accordance with the Unified Soil Classification System. The soil descriptions and classifications are based on visual examination and should be considered approximate. Test Boring Records which present soils description and depict penetration resistances are included in the Appendix.

2.3 Laboratory Testing

Moisture Content: Moisture content has a decisive influence on the ability to properly compact the soil. For cohesive soils this is an especially important criteria. Moisture content determinations were performed per ASTM D-2216.

Classification Tests: Atterberg Limits Tests (ASTM D 4318) and Sieve Analysis of Coarse and Fine Aggregates (ASTM C 136) were performed on selected split spoon samples and composite/bulk samples obtained during the field explorations. The results were used to evaluate engineering properties of the materials and to aid in classifying and grouping soils.

Modified Proctor Compaction Test: Modified Proctor compaction testing was performed on portions of composite/bulk soil samples obtained from the site. The compaction test establishes the dry density, produced by a uniform compactive effort at varying moisture contents. The Proctor test was performed in accordance with ASTM Specification D 1557. The test results of the composite bulk sample obtained is presented as dry unit weight versus moisture content plots titled "Moisture Density Relationship" in the Appendix of this report.

California Bearing Ratio (CBR) Test: The results of the previously described compaction tests were used in preparing samples for laboratory CBR testing. The California Bearing Ratio, usually abbreviated "CBR", is a punching shear test. It provides data that is a semi-empirical index of the strength and deflection characteristics of a soil correlated with pavement performance to establish design curves for pavement thickness. The test is performed on a 6-inch diameter, 5-inch thick sample of compacted soil confined in a steel cylinder. Before testing, the sample is soaked in water under a confining pressure roughly

equivalent to the weight of the future pavement to determine the potential swelling and to simulate the subgrade saturation in the field. A 1.95 inch diameter piston is then forced into the soil at a standard rate to determine the resistance to penetration. The CBR is the ratio, expressed as a percentage, of the load required to produce a 0.1-inch deflection of the test soil to that required to produce the same deflection in a standard crushed stone. Results of the CBR test are included in the Appendix.

All laboratory test results are presented in the Appendix.

3.0 SITE AND SUBSURFACE CONDITIONS

3.1 Site Description

The project site is located within Northwest Field in Andersen Air Force Base. This Northwest Field area was previously used as take-offs and landing strips for military aircraft. It is our understanding that this location is being developed in support of the Air Force's missions including those from the Silver Flag Training Unit, Commando Warrior Training Programs, Combat Communications Squadron and the Rapid Engineer Deployable Heavy Operations Repair Squadron Engineers (RED HORSE).

The proposed building is located adjacent to the Airfield Operations Facility and slightly across and diagonal to the RHS' Vertical Special Capability and Horizontal Special Capability Warehouses.

3.2 Area and Site Geology

Our review of the U.S. Geological Map of Guam indicates that the project site is underlain by reef facies of the Marianas Limestone formation. This type of the Marianas Limestone formation is described as "massive, generally compact, porous and cavernous, white limestone of reef origin, made up mostly of corals in growth position in matrix of encrusting calcareous algae, especially along cliff faces."

3.3 General Subsurface Conditions

Data from the soil test borings are shown on the Test Boring Records in the Appendix. The subsurface conditions discussed in the following paragraphs and those shown on the Test Boring Records are based on the soil test borings, and represent an estimate of the subsurface conditions based on interpretation of the boring data using normally accepted geotechnical engineering judgments. Although individual test borings are representative of the subsurface conditions at the boring locations on the dates shown, they are not necessarily indicative of subsurface conditions at other locations or at other times.

The test borings encountered reddish brown to white silty coral gravel soils, commonly known as GM soils, at its existing ground surface. These coral gravels, measuring from about three (3) feet to eight (8) feet inches in thickness, were generally medium dense to dense in consistency.

The dominant subsurface soils encountered were white silty coral gravels with sand soils, which appear to be residual derivatives of the previously mentioned Marianas Limestone formation, extending to the terminating depths of the test borings from about 19 to 24 feet. Layers of occasional coral limestone boulders were observed within the granular soil strata at all Borings B-1 through B-5. These materials were found to be dense to very dense to hard in consistency.

It is noted that the SPT samples obtained in the field generally classified as silty coral gravels with sand, GM soils, with non-plastic Atterberg Limits properties as summarized in the Appendix, Plate A-2. The drilling operations tended to create more fine materials, which contributed to classification of the composite bulk samples as silty coral sands with gravels (SM soils).

Evidence of solution filled cavities was not recorded during the time of our field investigation at the boring locations. The presence of voids could be expected beneath the subsurface soils, as their potential presence is consistent with the formation characteristics of the Marianas Limestone strata. The potential of cavities and elastic silt soils inherently suggests that probing and grouting work, and subgrade proof-rolling be included in the earthwork phase of construction.

3.4 Groundwater

Groundwater was not encountered in the Test Borings during the time of our field investigations.

4.0 GEOTECHNICAL RECOMMENDATIONS

4.1 General

The following geotechnical design recommendations are based on our observations at the site, interpretation of the field data obtained during the explorations, and our experience with similar subsurface conditions. Subsurface conditions in unexplored locations may vary somewhat from those encountered.

Based on the results of the soil test borings and assumed wall, roof and floor loadings, it is our opinion that the planned buildings may be supported on spread foundations bearing on the competent silty coral gravel/coral limestone materials underlying the site or on well-compacted fill installed above the in-situ soils.

The potential of solution filled cavities and soft spots in the underlying soil strata exists; therefore, it is recommended that both a probing and grouting operations program and subgrade proof-rolling operations be undertaken to accomplish the required stable foundation base prior to construction.

4.2 Site and Subgrade Preparation

Before proceeding with construction, all existing topsoil and organic matter, refuse, and other deleterious non-soil materials should be removed from proposed construction areas.

After clearing and stripping, areas intended for concrete slabs, pavements, new fill, and foundations should be carefully evaluated by a geotechnical engineer. At that time, the engineer may require proofrolling of the subgrade with a 20- to 30-ton loaded tandem axle dump truck, heavy compactor, or other pneumatic-tired vehicle of similar size and weight. The purpose of the evaluation is to locate soft, weak, or excessively wet soils present at the time of construction. Any unsuitable materials observed during the evaluation and/or proofrolling operations should be undercut and replaced with compacted structural fill or stabilized in-place.

4.3 Groundwater Conditions

Based on the boring information, excavations are not expected to encounter or approach groundwater levels. Rainwater and runoff should not be allowed to accumulate on the site or in footing excavations. We note that groundwater levels are subject to seasonal, climatic and other variations and may be different at other times and locations than those stated in this report.

4.4 Difficult Excavation

We anticipate that most excavations at the site could be excavated with conventional backhoe equipment. Massive limestone boulders may occasionally be encountered which would require heavy duty excavation equipment for removal. The contractor should make provisions for hard rock excavation. The coral limestone/coral gravel materials could stand vertically unbraced for short periods. However, all personnel should be required to satisfy existing safety codes relative to excavation slopes, sheeting and bracing to protect workmen.

4.5 Cut Slope

It is recommended that any cut slopes in the coral gravel materials at the site be established at slopes not steeper than 1.5(H):1.0(V). Embankment slopes, if any, using coral fill materials should not be steeper than 1.5(H):1.0 (v). Measures mitigating erosion, such as installing vegetative cover, is recommended upon the completion of the work.

4.6 Structural Fill

Fill used to replace undercut areas or establish finished grades should be low to moderate plasticity soil and free of deleterious materials and rock fragments larger than 3 inches in diameter.

We anticipate that most of the on-site coral gravel soils could be suitable for re-use as structural fill on the project. It is recommended that the Liquid Limit and Plasticity Index of the structural fill should not exceed 25 percent and 6 percent, respectively, when tested in

accordance with ASTM D-4318. The structural fill should not have more than 35 percent finer than the No. 200 (0.075 mm) sieve when tested in accordance with ASTM D-1140 and the structural fill should classify as GW, GP, SW, SP, GM, SM, GP-GM, GW-GM, SP-SM or SW-SM by ASTM D-2487. The material should have a minimum laboratory California Bearing Ratio (CBR) value of 20 or more and should have a maximum swell of one percent or less when tested in accordance with ASTM D-1883. Proposed structural fill materials should be tested and evaluated by a qualified laboratory to confirm suitability.

We recommend that the grading contractor have equipment on site during earthwork for both drying and wetting of the fill soils. We do not anticipate significant problems in controlling moistures within the fill during dry weather, but moisture control may be difficult during extended periods of rain. Fill soil moisture content should be maintained between +/- 3% of the optimum.

Structural fill should be placed in lifts of 6 to 8 inches loose measure. We recommend that structural fill be compacted to at least 95 percent of the Modified Proctor (ASTM D1557) maximum dry density with the upper 12 inches compacted to at least 95 percent of the same criteria. All fill material should be placed in horizontal lifts and adequately keyed into stripped and scarified subgrade soils.

In excavated areas, the upper 12 inches of soils intended to support floor slabs and pavements should be scarified and recompacted to at least 95 percent of the Modified Proctor maximum dry density. In confined areas such as utility trenches, portable compaction equipment and thin lifts of 3 to 4 inches may be required to achieve specified degrees of compaction.

During fill placement, density tests should be performed by a soils technician to determine the degree of compaction and compliance with the project specifications. At least one field density test should be made per 2,000 square feet of fill area for each 1-foot thickness of compacted soil. Testing frequency should be increased in confined areas. Any areas that do not meet the compaction specifications should be recompacted to achieve compliance.

4.7 Foundation Support

Based on the results of the soil test borings, it appears that the planned structures may be supported on spread foundations bearing on competent dense to very dense white silty coral limestone materials underlying the site or on well-compacted coral fill soils. We recommend that footings be designed for an allowable bearing pressure of 5000 psf for the in-situ coral gravel soils or well-compacted coral fill materials placed above the coral limestone strata. The allowable bearing pressure applies to dead plus live loads and may be increased by 1/3 for transitory wind or seismic loads.

For assumed maximum column loads of 200 kips and 10 kips per foot wall loads, we estimate that individual spread footings supporting the column loads designed for 5000 psf bearing pressures would experience settlements on the order of about ½ to ¾ inch. Settlements of continuous footings are expected to experience total and differential settlements in the order of less than ½ inch.

We recommend that footing bottoms be established at least twenty-four (24) inches below lowest adjacent grades and not less than twenty-four (24) inches in width. The bottom of footings should be scarified at least twelve (12) inches, moisture conditioned, and compacted to at least 95% of the maximum dry density attainable by the ASTM D-1557 Method of Compaction.

The presence of cavities was not evident during our field explorations; however, based on the inherent properties of the subsurface Marianas Limestone formation, a probing and grouting program should be implemented prior to earthwork construction. It is recommended that one (1) probe hole be drilled with a small diameter drill bit at the center of all column footings and at fifteen (15) feet center to center along bearing walls to a depth of fifteen (15) feet below the bottom of footing elevation. The probe drilling should be performed under the full time inspection of a civil engineer and the supervision of a qualified Soils Engineer.

Probe drilling record, such as drill rates (time of unit penetration such as minutes per foot (or meter) drilled), drilling behavior, and observation of drill cuttings should be obtained and evaluated by the Soils Engineer. Significant sized cavities, if found, should be grouted under at least 60 psi pressure. Compressible soils, when encountered, should be excavated and replaced with concrete or properly compacted backfill materials. All other probe holes should be backfilled with a high slump sand-cement mixture or low strength concrete thoroughly rodded for complete backfill. The sand-cement grout should have a minimum compressive strength of 1450 psi at twenty-eight (28) days.

Excavation of the silty coral limestone materials could be difficult at some locations. It is anticipated that heavy duty equipment would be necessary if extensive excavation is planned for the foundations. The Contractor should make provisions for hard rock excavation.

4.8 Soil-Supported Slabs

We recommend the use of an impermeable membrane to reduce dampness from moisture.

Floor slabs not required to support HS20 and forklift loading

Floor slabs may be supported on the in-situ coral gravel soils or on well-compacted coral fill materials prepared as discussed in the "Construction Recommendations" section of this report. The subgrade should be compacted to a dry density equivalent to at least 95% of the maximum attainable by the ASTM D-1557 Method of Compaction. If slab moisture is considered a potential problem, the floor slabs should be constructed over a 4-inch layer of gravel which will serve as a capillary moisture break. The gravel should have a gradation of 90-100 percent passing a ¾ inch sieve and 0-5 percent passing a No. 4 sieve. Further protection against moisture may be gained with an impervious membrane placed over the gravel. A 2-inch cushion of clean sand placed above and below the membrane would tend to protect it against puncturing.

Floor slabs required to support HS20 and forklift loading

Please refer to the recommendations contained in the Rigid Pavement section of this report.

4.9 Pavement Support

We understand that HS20 truck loading (8,000 pound front axle and 32,000 pound rear axles loads) and forklift traffic is planned at the facility. No other design traffic conditions were provided prior to this report preparation. We have assumed moderate truck traffic and a CBR value of 8 for the coral gravel (GM) and coral limestone subgrade.

The latest specifications, indicated in the later parts of this section, shall govern the design and placement of pavements.

The recommended pavement design alternatives are subject to successful completion of site and subgrade preparation and fill placement as recommended in this report.

Flexible Pavements

The following flexible pavement recommendations are based on an assumed CBR value of 8 and typical loading conditions expected for the project:

- For parking lots and driveways restricted to moderate automobile traffic, car parking, we recommend a light-duty section consisting of:

  2 inches asphaltic concrete (A/C) wearing course
  6 inches of compacted base course

- For parking lots and driveways subject to HS20 truck traffic, we recommend a heavy-duty section consisting of:

  1 inch of asphaltic concrete (A/C) wearing course
  2 inches of asphaltic concrete (A/C) binder course
  8 inches of compacted base course

The compaction, quality and gradation of the base course will directly affect the quality and life of the pavement section. Consequently, we recommend a minimum compaction of 95 percent of the maximum dry density for the base course material as determined by the Modified Proctor compaction test (ASTM D 1557, Method C). A soil engineering technician working under the direction of a geotechnical engineer should observe placement and compaction of the base course material and perform soil density tests to confirm that the material has been placed in accordance with our recommendations. Base course materials should extend at least 2 feet horizontally beyond the planned pavement edges.

The base course aggregates should conform to the requirements outlined in OICC-123C Specifications for New Construction of Bituminous Concrete Roads, Streets, Runways, Taxiways and Parking Areas for Guam and the Trust Territories of the Pacific Islands by the Officer in Charge of Construction, Naval Facilities Engineering Command, Marianas dated 06 July 1982. The OICC-123C referenced specification could be considered as an equivalent, local alternative to other military specifications such as the Unified Facilities Criteria.

In addition, all asphalt material and paving operations should meet applicable specifications of the Asphalt Institute MS-2, and OICC-123C Specifications for New Construction of Bituminous Concrete Roads, Streets, Runways, Taxiways and Parking Areas for Guam and the Trust Territories of the Pacific Islands by the Officer in Charge of Construction, Naval Facilities Engineering Command, Marianas dated 06 July 1982.

Rigid Pavements

We recommend rigid pavements where heavy truck or forklift traffic is concentrated. Rigid pavement design has been based on the assumed traffic conditions and a CBR value of 8. The concrete is assumed to have a modulus of rupture of 600 psi or more, and a 28-day compressive strength of at least 4,000 psi. For a 15-year pavement life, we recommend the following rigid concrete pavement thicknesses:

Car Parking	5 inches
Truck Traffic	8 inches

As the compaction, quality and gradation of the crushed stone base will directly affect the quality and life of the rigid pavement section, a minimum 4-inch thickness of base course materials compacted to at least 100% of the Modified Proctor maximum dry density attainable by the ASTM D-1557 Method of Compaction is recommended under rigid pavements. The physical base course requirements should meet the criteria outlined in the previously mentioned references.

Control joints for 5-inch sections should be 10 feet each way or for 8-inch sections 16 feet each way. Saw-cut joints should extend a minimum of 1/4 of the concrete thickness. The rigid pavement structural section should also meet the requirements of the Unified Facilities Criteria or those outlined in the FP-03 Standard Specifications for Construction of Roads and Bridges on Federal Highway Projects, Section 501, Rigid Pavement.

4.10 Modulus of Subgrade Reaction

Based on our review of the data obtained during our field investigation and the laboratory test results, it is recommended that a modulus of subgrade reaction of 300 pounds per cubic inch would be representative of the soils encountered at the project site.

4.11 Seismic Criteria

We have reviewed the 2009 International Building Code (IBC 2009) criteria for establishing a Site Class Definition per Section 1613.5.5 for the project site. Based on our analysis using the soil boring information (N-values) developed for the project at the building location, assuming similar subsurface soils are encountered to depths of one hundred feet, and our experience with the subsurface soils encountered within this area, it is our opinion that the average subsurface conditions correspond to Site Class C as described in Tables 1613.5.2 and1613.5.5.

5.0 QUALIFICATIONS OF RECOMMENDATIONS

Our evaluation of foundation design and construction conditions has been based on our understanding of the site and project information and the data obtained during our field exploration. The general subsurface conditions used were based on interpolation of the subsurface data between the borings. Regardless of the thoroughness of a subsurface exploration, there is the possibility that conditions between borings will differ from those at the boring locations, that conditions are not as anticipated by the designers, or that the construction process has altered the soil conditions. Therefore, geotechnical engineers should evaluate earthwork and foundation construction to verify that the conditions anticipated in design actually exist. Otherwise, we assume no responsibility for construction compliance with the design concepts, specifications or recommendations.

The design recommendations in this report have been developed on the basis of the previously described project characteristics and subsurface conditions. If project criteria, or locations change, we should be permitted to determine if the recommendations must be modified. The findings of such a review will be presented in a supplemental report.

The nature and extent of variations between the borings may not become evident until the course of construction. If such variations then appear evident, it will be necessary to re-evaluate the recommendations of this report after on-site observations of the conditions.

Our professional services have been performed, our findings derived, and our recommendations prepared in accordance with generally accepted geotechnical engineering principles and practices. This warranty is in lieu of all other warranties either expressed or implied.

Respectfully Submitted,
Pacific Soils Engineering & Testing

Maria Elizabeth V. Cristi, P.E.
Principal Engineer

MARIA ELIZABETH V. CRISTI
CERTIFICATE No. 1106
CIVIL
Exp. 8/30/2012
GUAM
PROFESSIONAL ENGINEER

Expires: 30 April 2012

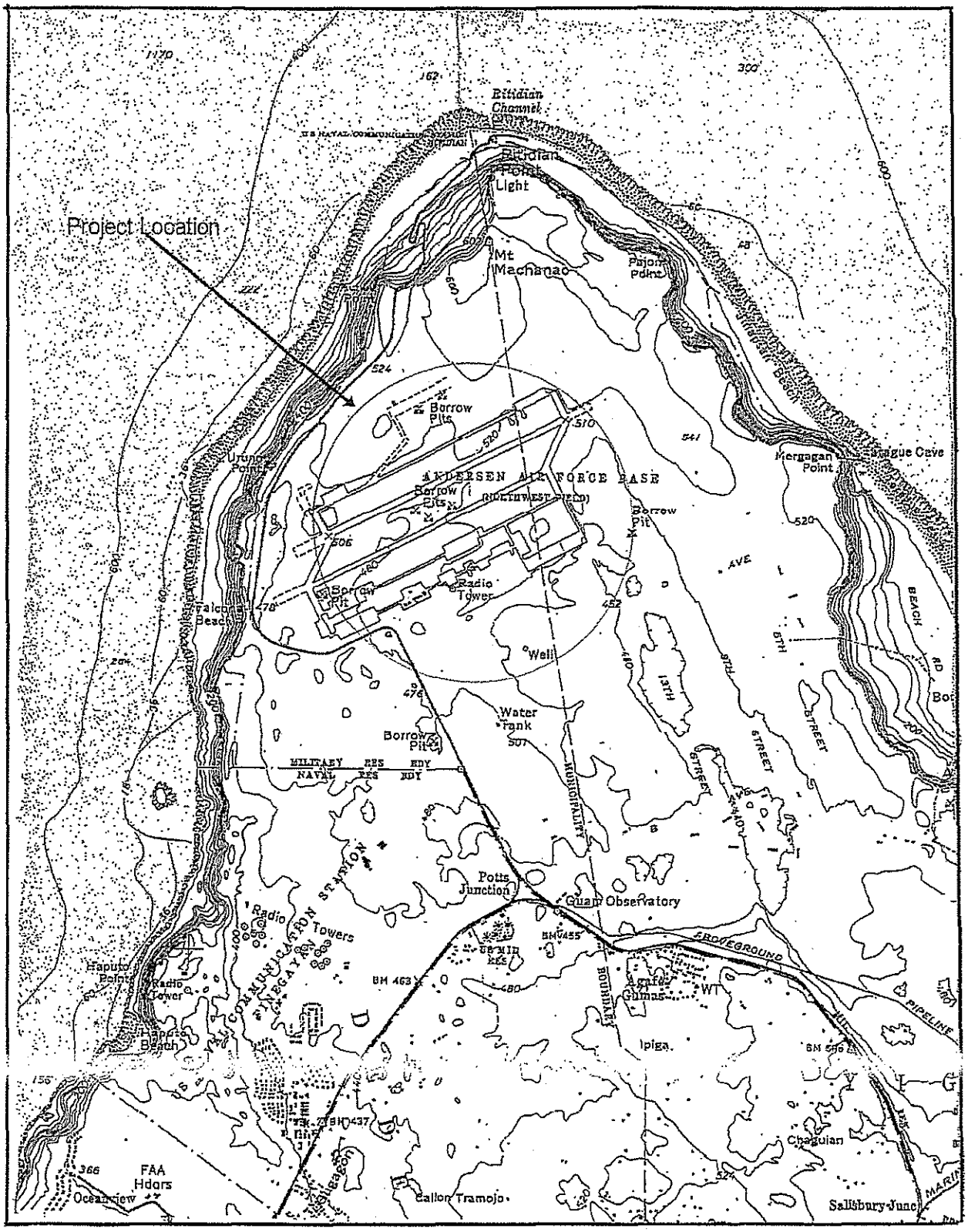

Not To Scale

MAP OF AREA
PLATE 1

Reference: United States Department of Enterior Geological Survey, 1978
Topographic Map of Guam, Marianas Islands

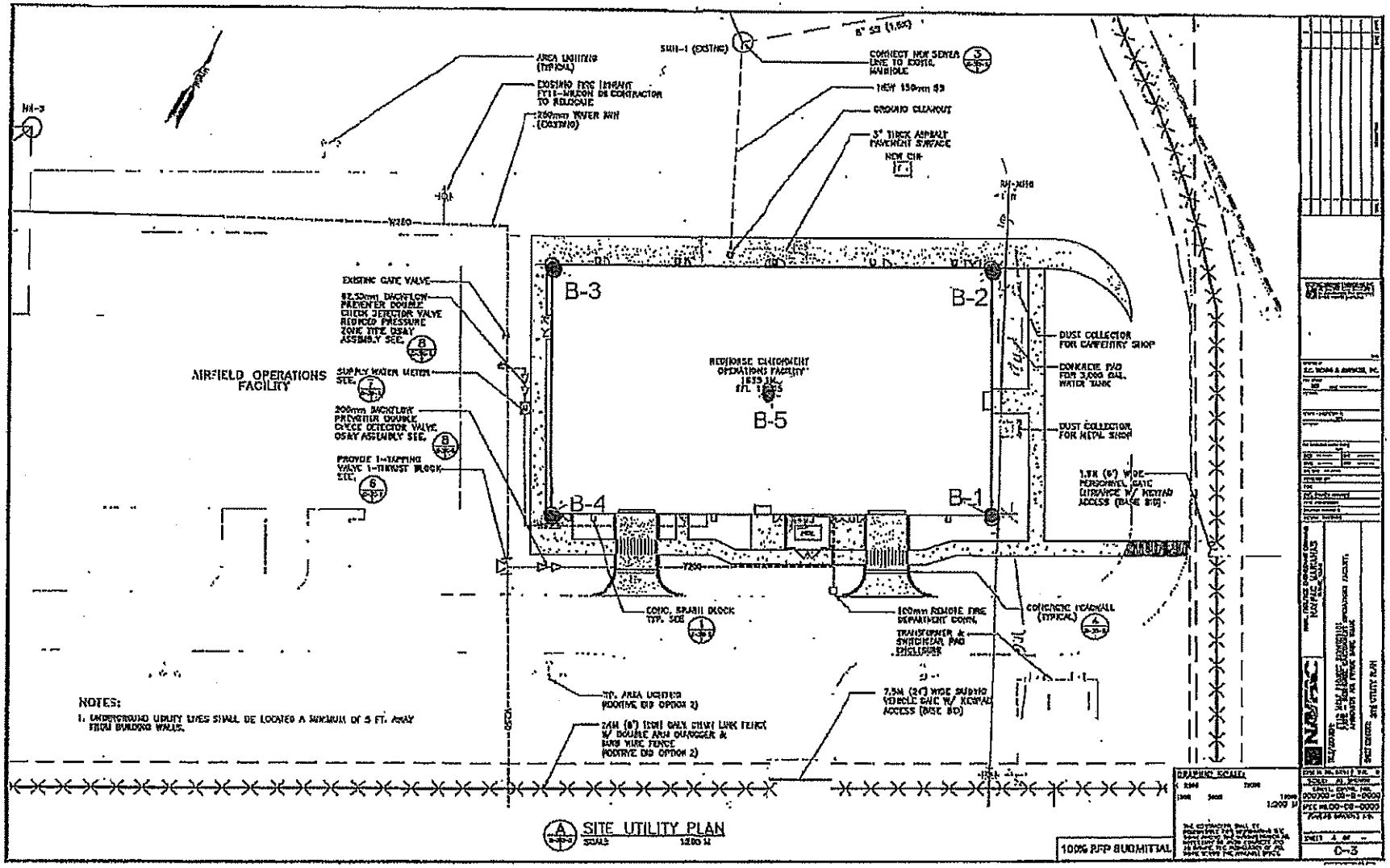

LEGEND:

● B-1 Indicates No. and Approximate Location of Test Boring

PLOT PLAN
PLATE 2

Table No. 1 : Summary of Laboratory Test Results (SPT Samples)

FY-12 MCAF Project SAKW059101, PRTC Red Horse Cantonment Operation Facility
Northwest Field, Andersen Air Force Base, Guam

Test Boring No.	Sample No.	Depth of Sample (In.)	Sieve Analysis (Percent Passing)	2-Inch	1-1/2 inch	1-inch	¾-Inch	½-Inch	3/8-Inch	No. 04	No. 10	No. 40	No. 100	No. 200
1	1	3'-4'6"			100	95	92	80	74	60	47	39	31	26
1	3	18'-18'3"			100	90	82	76	65	60	51	38	31	27
2	1	8'-8'4"					100	91	84	58	42	36	27	22
2	3	18'-18'5"						100	85	56	44	35	26	21
3	1	8'-9'1"				100	88	76	69	54	39	22	15	13
3	3	23'-23'4"					100	85	78	54	46	28	20	17
4	2	8'-8'10"				100	88	83	70	52	40	24	15	13
4	4	23'-24'6"				100	93	88	72	56	42	28	17	14
5	1	3'-4'					100	93	87	57	44	32	23	20
5	3	13'-13'8"				100	88	77	62	47	41	23	14	13
5	5	23'-24'6"				100	97	88	74	59	53	31	21	19

Table No. 2 : Summary of Laboratory Test Results (Composite Bulk Sample)

FY-12 MCAF Project SAKW059101, PRTC Red Horse Cantonment Operations Facility
Northwest Field, Andersen Air Force Base, Guam

Composite Bulk Sample No.	Boring/ Sample No.	Depth of Sample (In.)	Sieve Analysis (Percent Passing)	2-Inch	1-1/2 inch	1-inch	¾-Inch	½-Inch	3/8-Inch	No. 04	No. 10	No. 40	No. 100	No. 200
1	B-1, S-1A & B-2, S-1A					100	100	99	96	85	73	53	44	40
2	B-3, S-1A, B-4, S-1A & B-5, S-1A				100	100	99	98	93	78	66	46	38	34

Composite Bulk Sample No.	Boring/ Sample No.	Depth of Sample (In.)	Liquid Limit	Plastic Limit	Plasticity Index	Visual Description	ASTM D-2487 Classification	Maximum Dry Density (pcf)	Optimum Moisture Content (%)	California Bearing Ratio (%)
1	B-1, S-1A & B-2, S-1A		NP	NP	NP	White Silty Coral Sand with Gravel	SM	126.1	9.5	48
2	B-3, S-1A, B-4, S-1A & B-5, S-1A		NP	NP	NP	White Silty Coral Sand with Gravel	SM	127.3	9.5	43

Abbreviations Used: MDD–Maximum Dry Density; OMC–Optimum Moisture Content; NP–Non-Plastic

PROJECT: FY-12 MCAF Project SAKW059101, PRTC-Red Horse Cantonment Operations Facility

BORING No. 01 (Page 1 of 2)

CLIENT: N.C. Macario and Associates
LOCATION: Northwest Field, Andersen Air Force Base, Guam
DATE: 17-Mar-11

SURFACE ELEVATION Existing Ground Surface
EQUIPMENT Mobile Drill B-61 with an 8-inch diameter Hollow Stem Auger

PENETRATION RATE PER FOOT (minutes-seconds)	MOISTURE CONTENT (%)	DRY DENSITY (pcf)	BLOWS/FOOT on SAMPLER	CORE and % RECOVERY	SAMPLES and/or CORES	DEPTH in feet (meter)	GRAPHIC SYMBOL	LETTER SYMBOL	DESCRIPTION
						(0.00) 0			
0-08						(0.30) 1		GM	(0'-00") Reddish brown to white silty coral gravel with sand (medium dense to dense)
0-39						(0.61) 2			
0-50	14.7		55		⊠	(0.91) 3			
-					S-1A	(1.22) 4		GM	(3'-00") White silty coral gravel with sand (dense to very dense)
0-28/6"						(1.52) 5			
0-38						(1.83) 6			
0-46						(2.13) 7			
1-14	13.5		86/10"		⊠	(2.44) 8			
-						(2.74) 9		GM	(8'-00") White silty coral gravel with sand and limestone boulders (very dense) Becomes hard
2-03						(3.05) 10			
1-17						(3.35) 11			
1-11						(3.66) 12			
3-33						(3.96) 13			
0-48						(4.27) 14			
1-01						(4.57) 15			
1-17						(4.88) 16			
									(16'-00")

LOG OF BORING

NOTES:

- ■ Depth at which undisturbed sample was taken
- ⊠ Depth at which disturbed sample was taken
- □ Depth at which sample was lost during extraction
- I Depth and length of core run
- Driving energy-140 lbs. weight dropping 30 inches

PACIFIC SOILS ENGINEERING & TESTING

CHECKED BY	mec/pbc	DATE	3-28-11	PLATE
FILE	427-009R			A-1A

PROJECT: FY-12 MCAF Project SAKW059101, PRTC-Red Horse Cantonment Operations Facility

BORING No. 01 (Page 2 of 2)

CLIENT: N.C. Macario and Associates
LOCATION: Northwest Field, Andersen Air Force Base, Guam
DATE: 17-Mar-11

SURFACE ELEVATION Existing Ground Surface
EQUIPMENT Mobile Drill B-61 with an 8-inch diameter Hollow Stem Auger

PENETRATION RATE PER FOOT (minutes-seconds)	MOISTURE CONTENT (%)	DRY DENSITY (pcf)	BLOWS/FOOT on SAMPLER	CORE and % RECOVERY	SAMPLES and/or CORES	DEPTH in feet (meter)	GRAPHIC SYMBOL	LETTER SYMBOL	DESCRIPTION
						(4.88) 16			
								GM	(16'-00") White silty coral gravel with sand
1-12						(5.18) 17			and limestone boulders (very dense)
1-17	7.9		50/3"		☒	(5.49) 18			
									Remains very dense
0-40/9"						(5.79) 19			
0-51						(6.10) 20			
0-49						(6.40) 21			
0-25						(6.71) 22			
0-28	9.1		45		☒	(7.01) 23			Becomes dense
–						(7.32) 24			(24'-06") Boring terminated at 24'-06"
									on 03-17-11 at 1545 hours
						(7.62) 25			No groundwater encountered
									No cavities encountered
						(7.93) 26			
						(8.23) 27			
						(8.54) 28			
						(8.84) 29			
						(9.15) 30			
						(9.45) 31			
						(9.76) 32			

LOG OF BORING

NOTES:

- ■ Depth at which undisturbed sample was taken
- ☒ Depth at which disturbed sample was taken
- □ Depth at which sample was lost during extraction
- I Depth and length of core run
- Driving energy-140 lbs. weight dropping 30 inches

PACIFIC SOILS ENGINEERING & TESTING

CHECKED BY	mec/pbc	DATE	3-28-11	PLATE
FILE	427-009R			A-1A

PROJECT: FY-12 MCAF Project SAKW059101, PRTC-Red Horse Cantonment Operations Facility

BORING No. 02 (Page 1 of 2)

CLIENT: N.C. Macario and Associates

LOCATION: Northwest Field, Andersen Air Force Base, Guam

DATE: 18-Mar-11

SURFACE ELEVATION Existing Ground Surface

EQUIPMENT Mobile Drill B-61 with an 8-inch diameter Hollow Stem Auger

PENETRATION RATE PER FOOT (minutes-seconds)	MOISTURE CONTENT (%)	DRY DENSITY (pcf)	BLOWS/FOOT on SAMPLER	CORE and % RECOVERY	SAMPLES and/or CORES	DEPTH in feet (meter)	GRAPHIC SYMBOL	LETTER SYMBOL	DESCRIPTION
						(0.00) 0			
0-30					S-1A	(0.30) 1		GM	(0'-00") Reddish brown to white silty coral gravel with sand and limestone boulders (dense to very dense)
3-52						(0.61) 2			
4-38						(0.91) 3			
1-46						(1.22) 4			
1-19						(1.52) 5			
0-52						(1.83) 6			
0-46						(2.13) 7			
0-53	6.7		65/4"		⊠	(2.44) 8			
0-45/8"						(2.74) 9		GM	(8'-00") White silty coral gravel with sand and limestone boulders (very dense)
1-06						(3.05) 10			
0-39						(3.35) 11			
0-42						(3.66) 12			
0-29	6.1		70/5"		⊠	(3.96) 13			Remains very dense
0-28/7"						(4.27) 14			
0-48						(4.57) 15			
0-30						(4.88) 16			
									(16'-00")

LOG OF BORING

NOTES:

- ■ Depth at which undisturbed sample was taken
- ⊠ Depth at which disturbed sample was taken
- □ Depth at which sample was lost during extraction
- ⊥ Depth and length of core run
- Driving energy-140 lbs. weight dropping 30 inches

PACIFIC SOILS ENGINEERING & TESTING

CHECKED BY	mec/pbc	DATE	3-28-11	PLATE
FILE	427-009R			A-1B

PROJECT: FY-12 MCAF Project SAKW059101, PRTC-Red Horse Cantonment Operations Facility

BORING No. 02 (Page 2 of 2)

CLIENT: N.C. Macario and Associates
LOCATION: Northwest Field, Andersen Air Force Base, Guam
DATE: 18-Mar-11

SURFACE ELEVATION Existing Ground Surface
EQUIPMENT Mobile Drill B-61 with an 8-inch diameter Hollow Stem Auger

PENETRATION RATE PER FOOT (minutes-seconds)	MOISTURE CONTENT (%)	DRY DENSITY (pcf)	BLOWS/FOOT on SAMPLER	CORE and % RECOVERY	SAMPLES and/or CORES	DEPTH in feet (meter)	GRAPHIC SYMBOL	LETTER SYMBOL	DESCRIPTION
						(4.88) 16			
0-34						(5.18) 17			(16'-00") White silty coral gravel with sand and limestone boulders (dense to very dense)
0-36	5.7		60/5"		⊠	(5.49) 18			
–						(5.79) 19			(18'-05") Boring terminated at 18'-05" on 03-18-11 at 0910 hours No groundwater encountered No cavities encountered
						(6.10) 20			
						(6.40) 21			
						(6.71) 22			
						(7.01) 23			
						(7.32) 24			
						(7.62) 25			
						(7.93) 26			
						(8.23) 27			
						(8.54) 28			
						(8.84) 29			
						(9.15) 30			
						(9.45) 31			
						(9.76) 32			

LOG OF BORING

NOTES:

- ■ Depth at which undisturbed sample was taken
- ⊠ Depth at which disturbed sample was taken
- □ Depth at which sample was lost during extraction
- ⊥ Depth and length of core run
- Driving energy-140 lbs. weight dropping 30 inches

PACIFIC SOILS ENGINEERING & TESTING

CHECKED BY	mec/pbc	DATE	3-28-11	PLATE
FILE	427-009R			A-1B

PROJECT: FY-12 MCAF Project SAKW059101, PRTC-Red Horse Cantonment Operations Facility

BORING No. 03 (Page 1 of 2)

CLIENT: N.C. Macario and Associates
LOCATION: Northwest Field, Andersen Air Force Base, Guam
DATE: 18-Mar-11

SURFACE ELEVATION Existing Ground Surface
EQUIPMENT Mobile Drill B-61 with an 8-inch diameter Hollow Stem Auger

PENETRATION RATE PER FOOT (minutes-seconds)	MOISTURE CONTENT (%)	DRY DENSITY (pcf)	BLOWS/FOOT on SAMPLER	CORE and % RECOVERY	SAMPLES and/or CORES	DEPTH in feet (meter)	GRAPHIC SYMBOL	LETTER SYMBOL	DESCRIPTION
						(0.00) 0			
0-34					S-1A	(0.30) 1		GM	(0'-00") Reddish brown to white silty coral gravel with sand and limestone boulders (dense to very dense)
1-17						(0.61) 2			
3-50						(0.91) 3			
1-06						(1.22) 4			
0-27						(1.52) 5			
0-31						(1.83) 6			
0-38						(2.13) 7			
0-35	6.3		94/7"		⊠	(2.44) 8			
–						(2.74) 9		GM	(8'-00") White silty coral gravel with sand and limestone boulders (very dense)
0-42/11"						(3.05) 10			
0-32						(3.35) 11			
0-50						(3.66) 12			
1-08	10.7		76		⊠	(3.96) 13			Remains very dense
–						(4.27) 14			
0-35/6"						(4.57) 15			
0-58						(4.88) 16			
									(16'-00")

LOG OF BORING

NOTES:

- ■ Depth at which undisturbed sample was taken
- ⊠ Depth at which disturbed sample was taken
- □ Depth at which sample was lost during extraction
- I Depth and length of core run
- Driving energy-140 lbs. weight dropping 30 inches

PACIFIC SOILS ENGINEERING & TESTING

CHECKED BY	mec/pbc	DATE	3-28-11	PLATE
FILE	427-009R			A-1C

PROJECT: FY-12 MCAF Project SAKW059101, PRTC-Red Horse Cantonment Operations Facility

BORING No. 03 (Page 2 of 2)

CLIENT: N.C. Macario and Associates
LOCATION: Northwest Field, Andersen Air Force Base, Guam
DATE: 18-Mar-11

SURFACE ELEVATION Existing Ground Surface
EQUIPMENT Mobile Drill B-61 with an 8-inch diameter Hollow Stem Auger

PENETRATION RATE PER FOOT (minutes-seconds)	MOISTURE CONTENT (%)	DRY DENSITY (pcf)	BLOWS/FOOT on SAMPLER	CORE and % RECOVERY	SAMPLES and/or CORES	DEPTH in feet (meter)	GRAPHIC SYMBOL	LETTER SYMBOL	DESCRIPTION
						(4.88) 16			
0-54						(5.18) 17			(16'-00") White silty coral gravel with sand and limestone boulders (very dense)
0-53						(5.49) 18			
0-31						(5.79) 19			
0-35						(6.10) 20			
0-36						(6.40) 21			
0-25						(6.71) 22			
0-26	7.7		55/4"		☒	(7.01) 23			
						(7.32) 24			(23'-04") Boring terminated at 23'-04" on 03-18-11 at 1200 hours
						(7.62) 25			No groundwater encountered
						(7.93) 26			No cavities encountered
						(8.23) 27			
						(8.54) 28			
						(8.84) 29			
						(9.15) 30			
						(9.45) 31			
						(9.76) 32			

LOG OF BORING

NOTES:

- ■ Depth at which undisturbed sample was taken
- ☒ Depth at which disturbed sample was taken
- □ Depth at which sample was lost during extraction
- ⊥ Depth and length of core run
- Driving energy-140 lbs. weight dropping 30 inches

PACIFIC SOILS ENGINEERING & TESTING

CHECKED BY	mec/pbc	DATE	3-28-11	PLATE
FILE	427-009R			A-1C

PROJECT: FY-12 MCAF Project SAKW059101, PRTC-Red Horse Cantonment Operations Facility

BORING No. 04 (Page 1 of 2)

CLIENT: N.C. Macario and Associates
LOCATION: Northwest Field, Andersen Air Force Base, Guam
DATE: 18-Mar-11

SURFACE ELEVATION Existing Ground Surface
EQUIPMENT Mobile Drill B-61 with an 8-inch diameter Hollow Stem Auger

PENETRATION RATE PER FOOT (minutes-seconds)	MOISTURE CONTENT (%)	DRY DENSITY (pcf)	BLOWS/FOOT on SAMPLER	CORE and % RECOVERY	SAMPLES and/or CORES	DEPTH in feet (meter)	GRAPHIC SYMBOL	LETTER SYMBOL	DESCRIPTION
						(0.00) 0			
0-10						(0.30) 1		GM	(0'-00") Reddish brown to white silty coral gravel with sand and limestone boulders (dense to very dense)
1-02						(0.61) 2			
1-56	11.6		95		⊠	(0.91) 3			
-					S-1A	(1.22) 4		GM	(3'-00") White silty coral gravel with sand and limestone boulders (very dense)
0-49/6"						(1.52) 5			
1-17						(1.83) 6			
0-36						(2.13) 7			
0-17	6.2		74/10"		⊠	(2.44) 8			Remains very dense
-						(2.74) 9			
0-35						(3.05) 10			
0-34						(3.35) 11			
0-32						(3.66) 12			
0-33	6.7		50/3"		⊠	(3.96) 13			Remains very dense
0-28/9"						(4.27) 14			
0-35						(4.57) 15			
0-37						(4.88) 16			
									(16'-00")

LOG OF BORING

NOTES:
- ■ Depth at which undisturbed sample was taken
- ⊠ Depth at which disturbed sample was taken
- □ Depth at which sample was lost during extraction
- I Depth and length of core run
- Driving energy-140 lbs. weight dropping 30 inches

PACIFIC SOILS ENGINEERING & TESTING

CHECKED BY	mec/pbc	DATE	3-28-11	PLATE
FILE	427-009R			A-1D

PROJECT: FY-12 MCAF Project SAKW059101, PRTC-Red Horse Cantonment Operations Facility

BORING No. 04 (Page 2 of 2)

CLIENT: N.C. Macario and Associates
LOCATION: Northwest Field, Andersen Air Force Base, Guam
DATE: 18-Mar-11

SURFACE ELEVATION Existing Ground Surface
EQUIPMENT Mobile Drill B-61 with an 8-inch diameter Hollow Stem Auger

PENETRATION RATE PER FOOT (minutes-seconds)	MOISTURE CONTENT (%)	DRY DENSITY (pcf)	BLOWS/FOOT on SAMPLER	CORE and % RECOVERY	SAMPLES and/or CORES	DEPTH in feet (meter)	GRAPHIC SYMBOL	LETTER SYMBOL	DESCRIPTION
						(4.88) 16			
0-49						(5.18) 17		GM	(16'-00") White silty coral gravel with sand and limestone boulders (very dense)
0-32						(5.49) 18			
0-21						(5.79) 19			
0-30						(6.10) 20			
0-37						(6.40) 21			
0-31						(6.71) 22			
0-26	7.7		72		⊠	(7.01) 23			Remains very dense
–						(7.32) 24			
						(7.62) 25			(24'-06") Boring terminated at 24'-06" on 03-18-11 at 1402 hours
						(7.93) 26			No groundwater encountered
						(8.23) 27			No cavities encountered
						(8.54) 28			
						(8.84) 29			
						(9.15) 30			
						(9.45) 31			
						(9.76) 32			

LOG OF BORING

NOTES:

- ■ Depth at which undisturbed sample was taken
- ⊠ Depth at which disturbed sample was taken
- □ Depth at which sample was lost during extraction
- ⊥ Depth and length of core run
- Driving energy-140 lbs. weight dropping 30 inches

PACIFIC SOILS ENGINEERING & TESTING

CHECKED BY	mec/pbc	DATE	3-28-11	PLATE
FILE	427-009R			A-1D

PROJECT: FY-12 MCAF Project SAKW059101, PRTC-Red Horse Cantonment Operations Facility

BORING No. 05 (Page 1 of 2)

CLIENT: N.C. Macario and Associates
LOCATION: Northwest Field, Andersen Air Force Base, Guam
DATE: 18-Mar-11

SURFACE ELEVATION Existing Ground Surface
EQUIPMENT Mobile Drill B-61 with an 8-inch diameter Hollow Stem Auger

PENETRATION RATE PER FOOT (minutes-seconds)	MOISTURE CONTENT (%)	DRY DENSITY (pcf)	BLOWS/FOOT on SAMPLER	CORE and % RECOVERY	SAMPLES and/or CORES	DEPTH in feet (meter)	GRAPHIC SYMBOL	LETTER SYMBOL	DESCRIPTION
						(0.00) 0			
0-15						(0.30) 1		GM	(0'-00") Reddish brown to white silty coral gravel with sand and limestone boulders (very dense)
1-03						(0.61) 2			
1-01	10.3		90		⊠	(0.91) 3			
–					S-1A	(1.22) 4		GM	(3'-00") White silty coral gravel with sand and limestone boulders (very dense)
0-16						(1.52) 5			
0-14						(1.83) 6			
0-18						(2.13) 7			
0-17	7.7		82/9"		⊠	(2.44) 8			Remains very dense
–						(2.74) 9			
0-22						(3.05) 10			
0-26						(3.35) 11			
0-13						(3.66) 12			
0-15	6.2		84/8"		⊠	(3.96) 13			Remains very dense
0-09/4"						(4.27) 14			
0-22						(4.57) 15			
0-13						(4.88) 16			
									(16'-00")

LOG OF BORING

NOTES:

- ■ Depth at which undisturbed sample was taken
- ⊠ Depth at which disturbed sample was taken
- □ Depth at which sample was lost during extraction
- I Depth and length of core run
- Driving energy-140 lbs. weight dropping 30 inches

PACIFIC SOILS ENGINEERING & TESTING

CHECKED BY	mec/pbc	DATE	3-28-11
FILE	427-009R		

PLATE A-1E

PROJECT: FY-12 MCAF Project SAKW059101, PRTC-Red Horse Cantonment Operations Facility

BORING No. 05 (Page 2 of 2)

CLIENT: N.C. Macario and Associates
LOCATION: Northwest Field, Andersen Air Force Base, Guam
DATE: 18-Mar-11

SURFACE ELEVATION Existing Ground Surface
EQUIPMENT Mobile Drill B-61 with an 8-inch diameter Hollow Stem Auger

PENETRATION RATE PER FOOT (minutes-seconds)	MOISTURE CONTENT (%)	DRY DENSITY (pcf)	BLOWS/FOOT on SAMPLER	CORE and % RECOVERY	SAMPLES and/or CORES	DEPTH in feet (meter)	GRAPHIC SYMBOL	LETTER SYMBOL	DESCRIPTION
						(4.88) 16			
0-12						(5.18) 17		GM	(16'-00") White silty coral gravel with sand and limestone boulders (very dense)
0-14	8.1		50/4"		☒	(5.49) 18			Remains very dense
0-17/8"						(5.79) 19			
0-12						(6.10) 20			
0-19						(6.40) 21			
0-26						(6.71) 22			
0-29	10.9		51		☒	(7.01) 23			Remains very dense
–						(7.32) 24			
						(7.62) 25			(24'-06") Boring terminated at 24'-06" on 03-18-11 at 1505 hours
						(7.93) 26			No groundwater encountered
						(8.23) 27			No cavities encountered
						(8.54) 28			
						(8.84) 29			
						(9.15) 30			
						(9.45) 31			
						(9.76) 32			

LOG OF BORING

NOTES:

- ■ Depth at which undisturbed sample was taken
- ☒ Depth at which disturbed sample was taken
- □ Depth at which sample was lost during extraction
- I Depth and length of core run
- Driving energy-140 lbs. weight dropping 30 inches

PACIFIC SOILS ENGINEERING & TESTING

CHECKED BY	mec/pbc	DATE	3-28-11
FILE	427-009R		

PLATE A-1E

Grain-Size Distribution (Unified Soil Classification System)

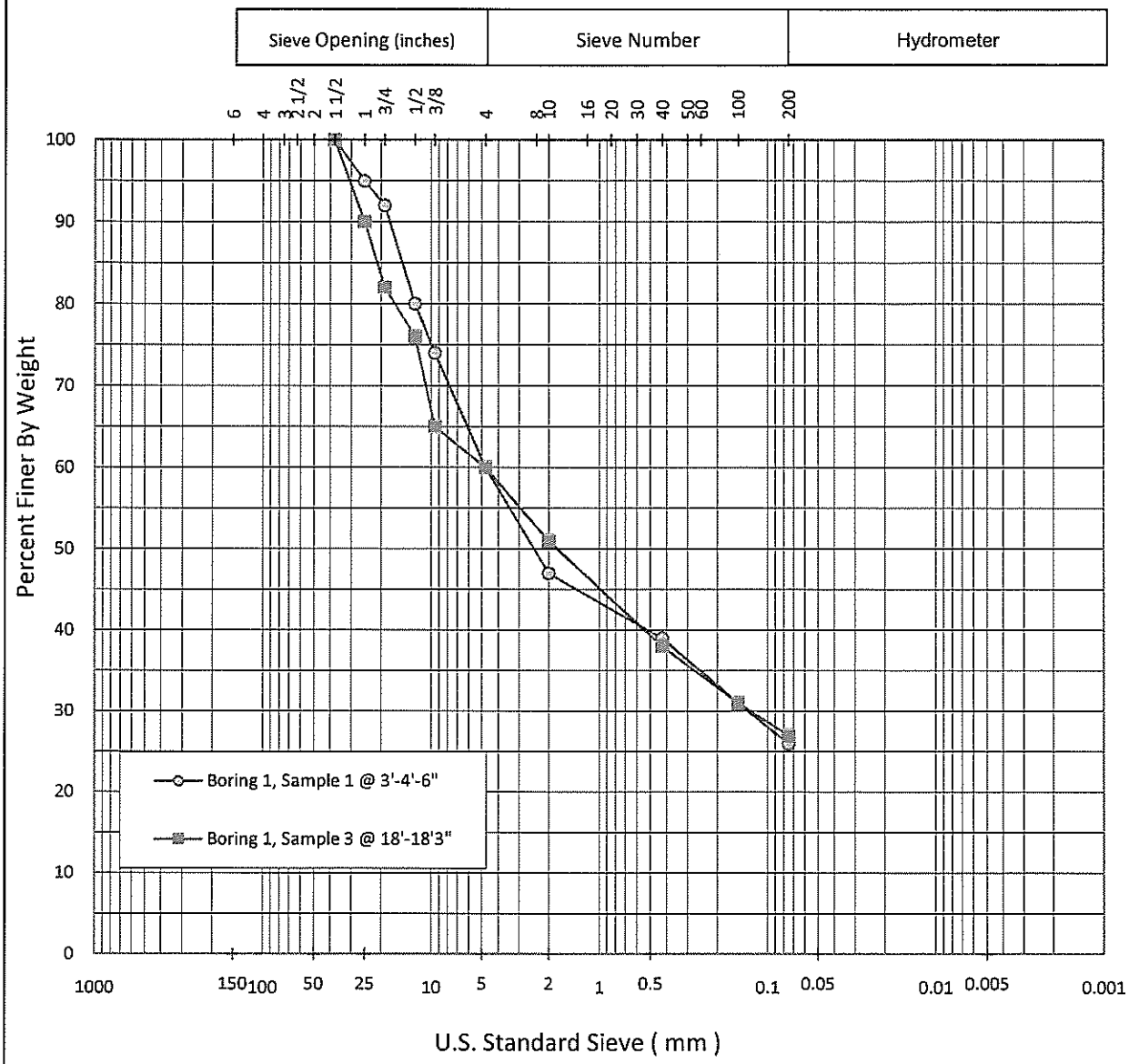

COBBLES	GRAVEL		SAND			SILT	CLAY
	coarse	fine	coarse	medium	fine		

SAMPLE SOURCE	CLASSIFICATION
Boring 1, Sample 1 @ 3'-4'-6"	GM
Boring 1, Sample 3 @ 18'-18'3"	GM

PACIFIC SOILS ENGINEERING & TESTING
GEOTECHNICAL CONSULTANTS
(GRAIN SIZE DISTRIBUTION)
ASTM C 136 AND C117

PROJECT:	FY-12 MCAF Project SAKW059101
	PRTC Red Horse Cantonment Ops Facility
LOCATION:	Northwest Field, AAFB Guam
CLIENT:	NC Macario & Associates, Inc.

Job Number:	427-009R	Approved by: mec/pbc	Date:	04.01.2011	Plate: A-3A

Grain-Size Distribution (Unified Soil Classification System)

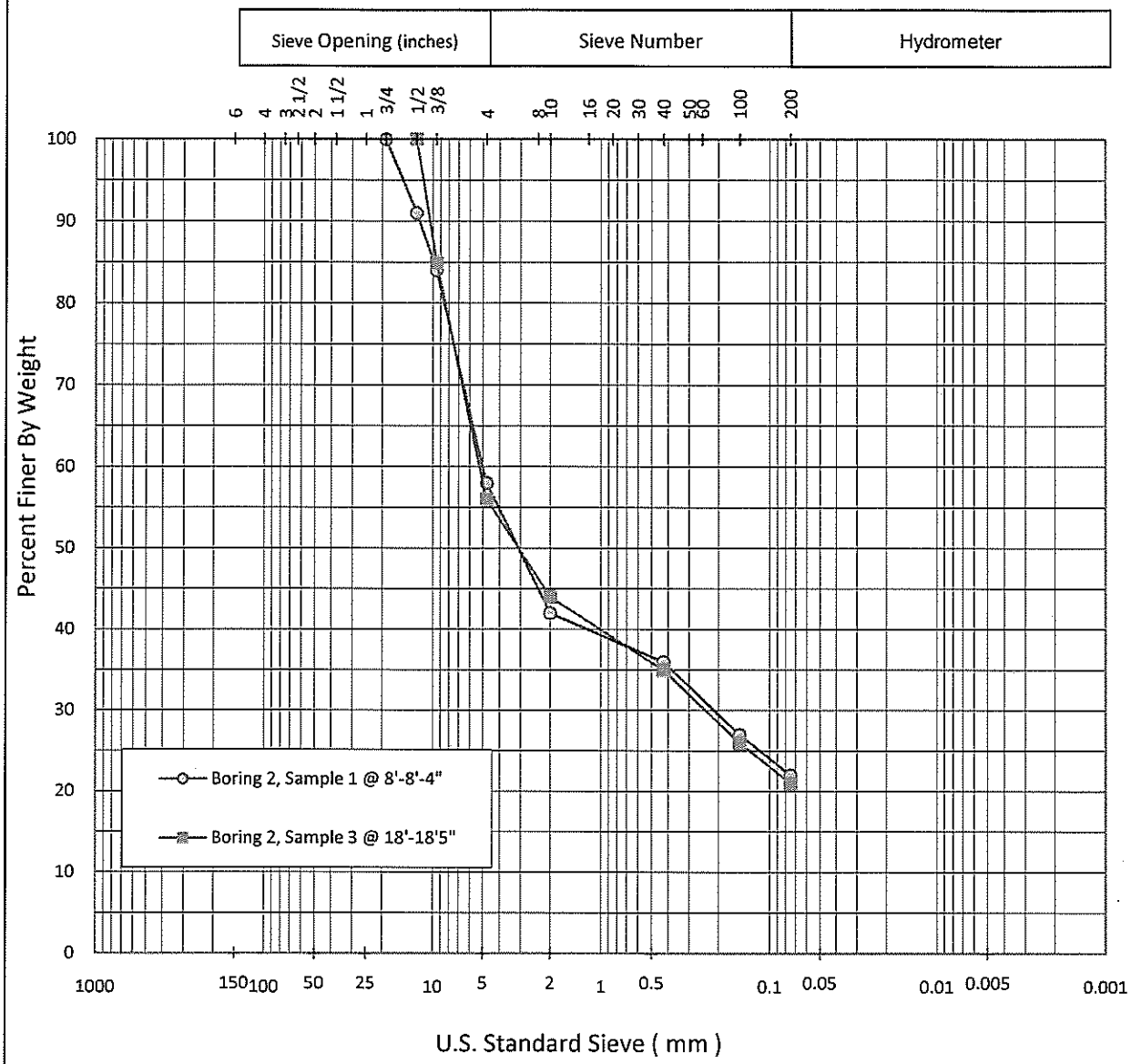

COBBLES	GRAVEL		SAND			SILT	CLAY
	coarse	fine	coarse	medium	fine		

SAMPLE SOURCE	CLASSIFICATION
Boring 2, Sample 1 @ 8'-8'-4"	GM
Boring 2, Sample 3 @ 18'-18'5"	GM

PACIFIC SOILS ENGINEERING & TESTING
GEOTECHNICAL CONSULTANTS
(GRAIN SIZE DISTRIBUTION)
ASTM C 136 AND C117

PROJECT:	FY-12 MCAF Project SAKW059101
	PRTC Red Horse Cantonment Ops Facility
LOCATION:	Northwest Field, AAFB Guam
CLIENT:	NC Macario & Associates, Inc.

Job Number:	427-009R	Approved by: mec/pbc	Date:	04.01.2011	Plate: A-3B

Grain-Size Distribution (Unified Soil Classification System)

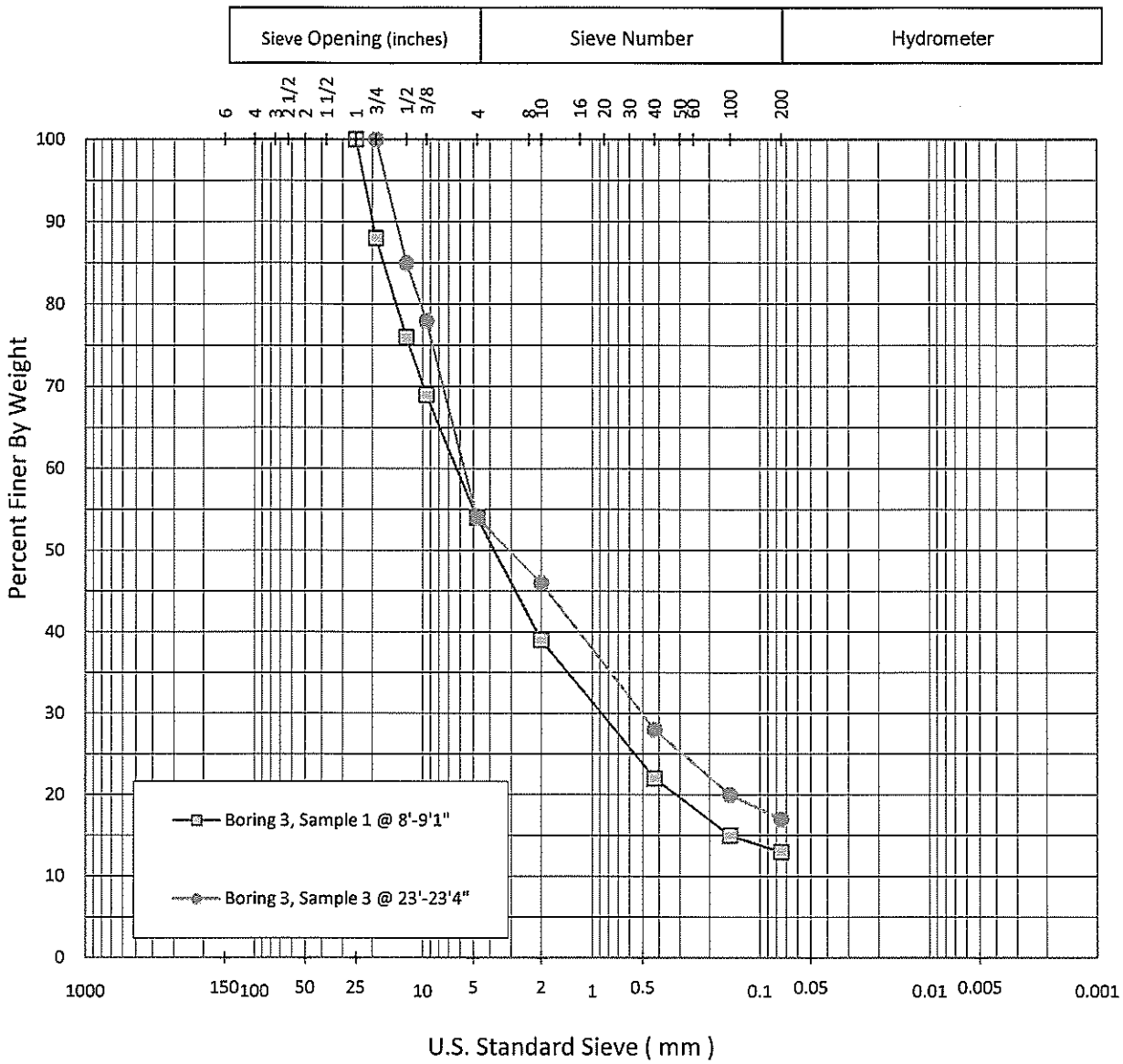

COBBLES	GRAVEL		SAND			SILT	CLAY
	coarse	fine	coarse	medium	fine		

SAMPLE SOURCE	CLASSIFICATION
Boring 3, Sample 1 @ 8'-9'1"	GM
Boring 3, Sample 3 @ 23'-23'4"	GM

PACIFIC SOILS ENGINEERING & TESTING
GEOTECHNICAL CONSULTANTS
(GRAIN SIZE DISTRIBUTION)
ASTM C 136 AND C117

PROJECT:	FY-12 MCAF Project SAKW059101
	PRTC Red Horse Cantonment Ops Facility
LOCATION:	Northwets Field, AAFB Guam
CLIENT:	N.C. Macario and Associates

Job Number:	427-009R	Approved by:	mec/pbc	Date: 04.01.2011	Plate: A-3C

Grain-Size Distribution (Unified Soil Classification System)

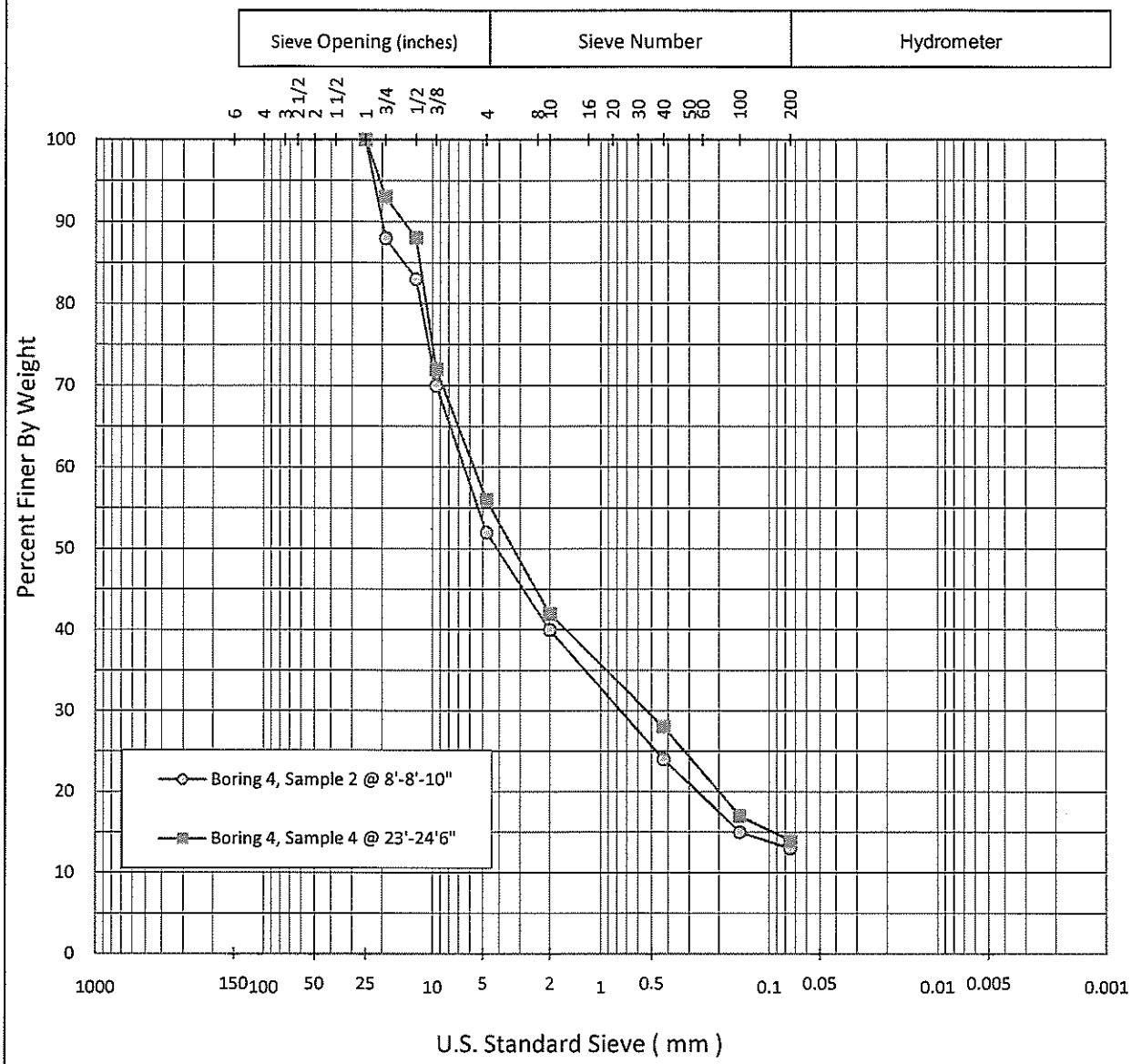

COBBLES	GRAVEL		SAND			SILT	CLAY
	coarse	fine	coarse	medium	fine		

SAMPLE SOURCE	CLASSIFICATION
Boring 4, Sample 2 @ 8'-8'-10"	GM
Boring 4, Sample 4 @ 23'-24'6"	GM

PACIFIC SOILS ENGINEERING & TESTING
GEOTECHNICAL CONSULTANTS
(GRAIN SIZE DISTRIBUTION)
ASTM C 136 AND C117

PROJECT:	FY-12 MCAF Project SAKW059101
	PRTC Red Horse Cantonment Ops Facility
LOCATION:	Northwest Field, AAFB Guam
CLIENT:	NC Macario & Associates, Inc.

Job Number:	427-009R	Approved by: mec/pbc	Date:	04.01.2011	Plate: A-3D

Grain-Size Distribution (Unified Soil Classification System)

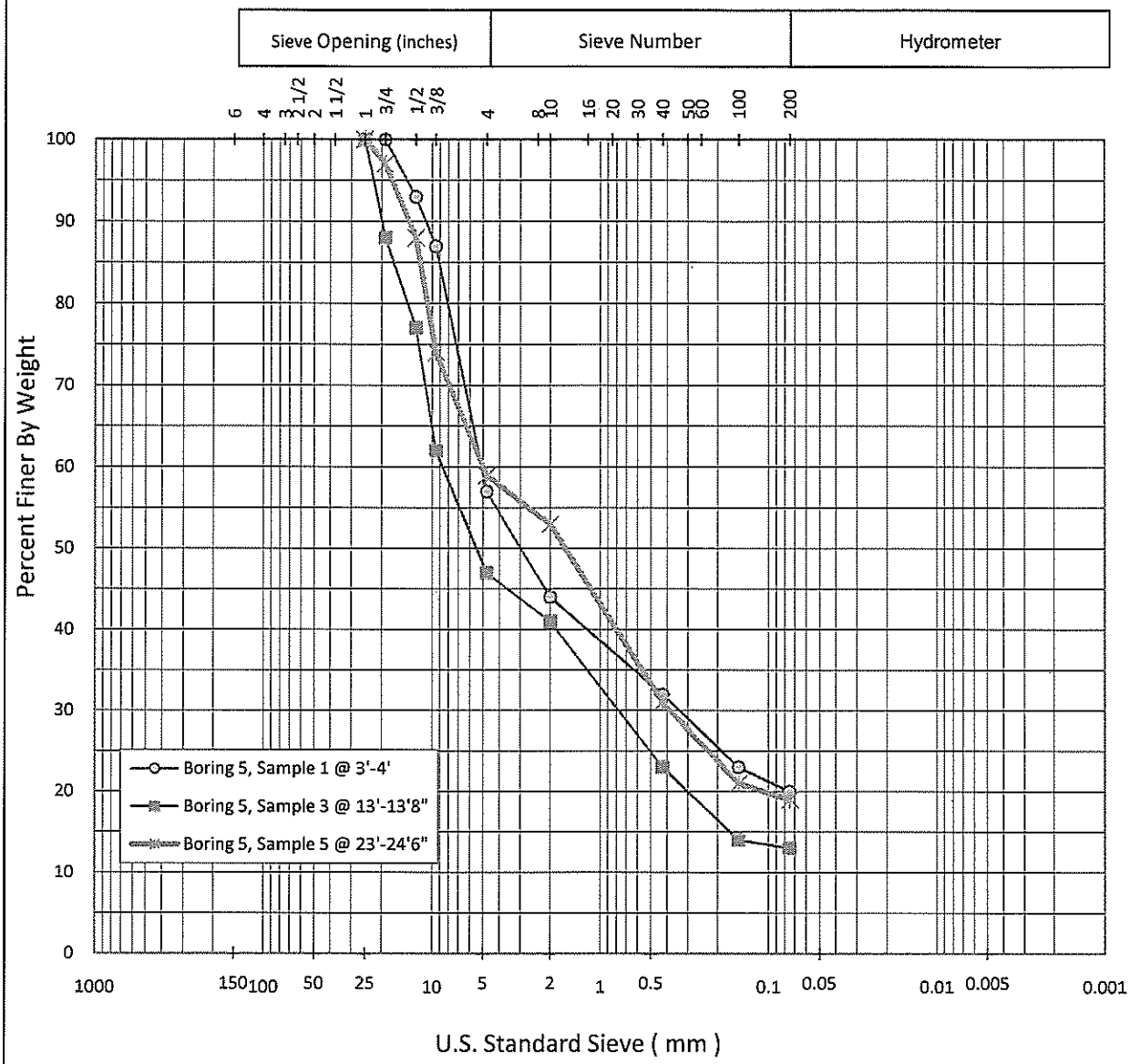

COBBLES	GRAVEL		SAND			SILT	CLAY
	coarse	fine	coarse	medium	fine		

SAMPLE SOURCE	CLASSIFICATION
Boring 5, Sample 1 @ 3'-4'	GM
Boring 5, Sample 3 @ 13'-13'8"	GM
Boring 5, Sample 5 @ 23'-24'6"	GM

PACIFIC SOILS ENGINEERING & TESTING
GEOTECHNICAL CONSULTANTS
(GRAIN SIZE DISTRIBUTION)
ASTM C 136 AND C117

PROJECT:	FY-12 MCAF Project SAKW059101
	PRTC Red Horse Cantonment Ops Facility
LOCATION:	Northwest Field, AAFB Guam
CLIENT:	NC Macario & Associates, Inc.

Job Number:	427-009R	Approved by:	mec/pbc	Date: 04.01.2011	Plate: A-3E

Grain-Size Distribution (Unified Soil Classification System)

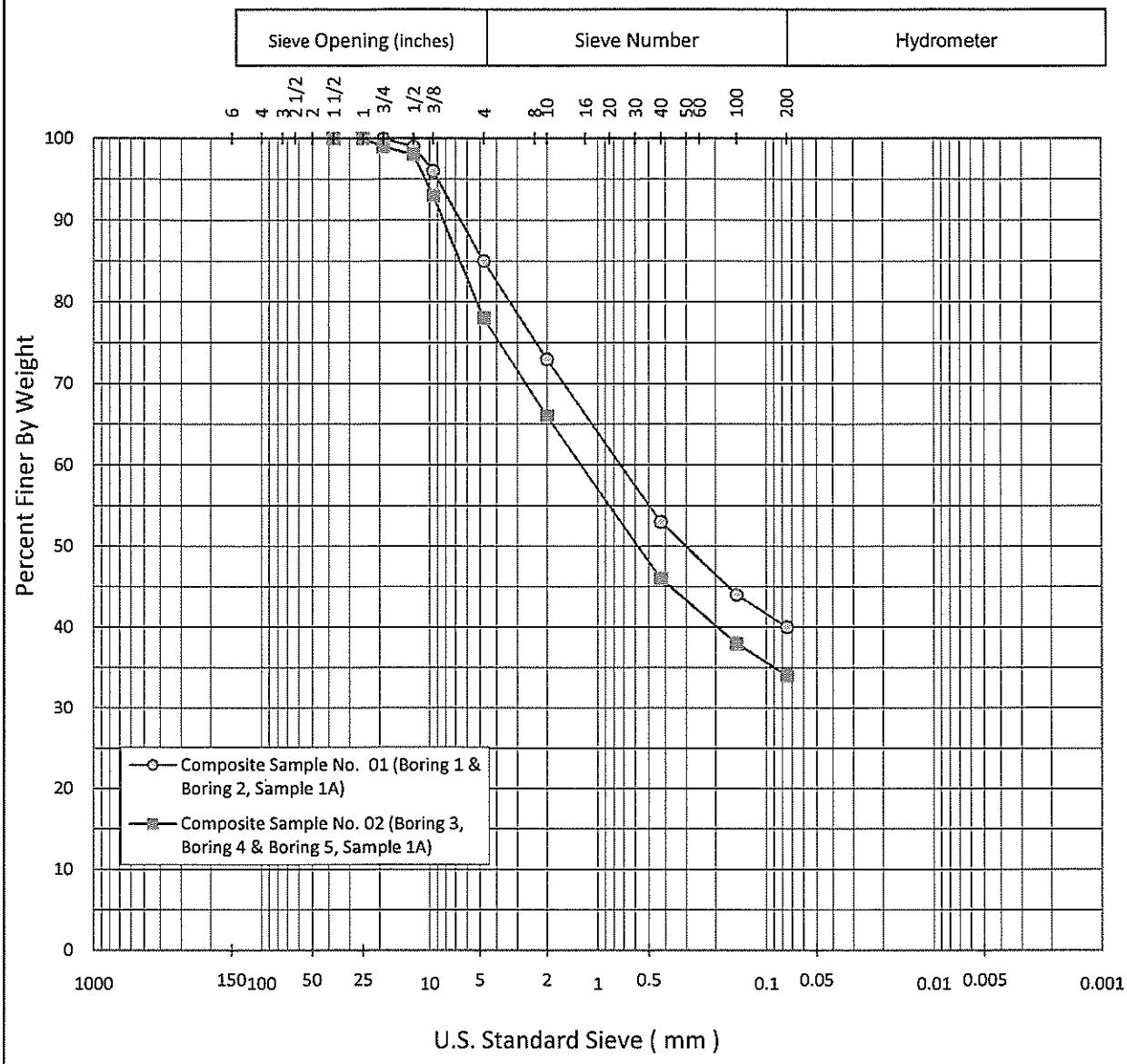

COBBLES	GRAVEL		SAND			SILT	CLAY
	coarse	fine	coarse	medium	fine		

SAMPLE SOURCE	CLASSIFICATION
Composite Sample No. 01 (Boring 1 & Boring 2, Sample 1A)	GM
Composite Sample No. 02 (Boring 3, Boring 4 & Boring 5, Sample 1A)	GM

PACIFIC SOILS ENGINEERING & TESTING
GEOTECHNICAL CONSULTANTS
(GRAIN SIZE DISTRIBUTION)
ASTM C 136 AND C117

PROJECT:	FY-12 MCAF Project SAKW059101
	PRTC Red Horse Cantonment Ops Facility
LOCATION:	Northwest Field, AAFB Guam
CLIENT:	NC Macario & Associates, Inc.

Job Number:	427-009R	Approved by: mec/pbc	Date:	04.01.2011	Plate: A-3F

PLASTICITY CHART

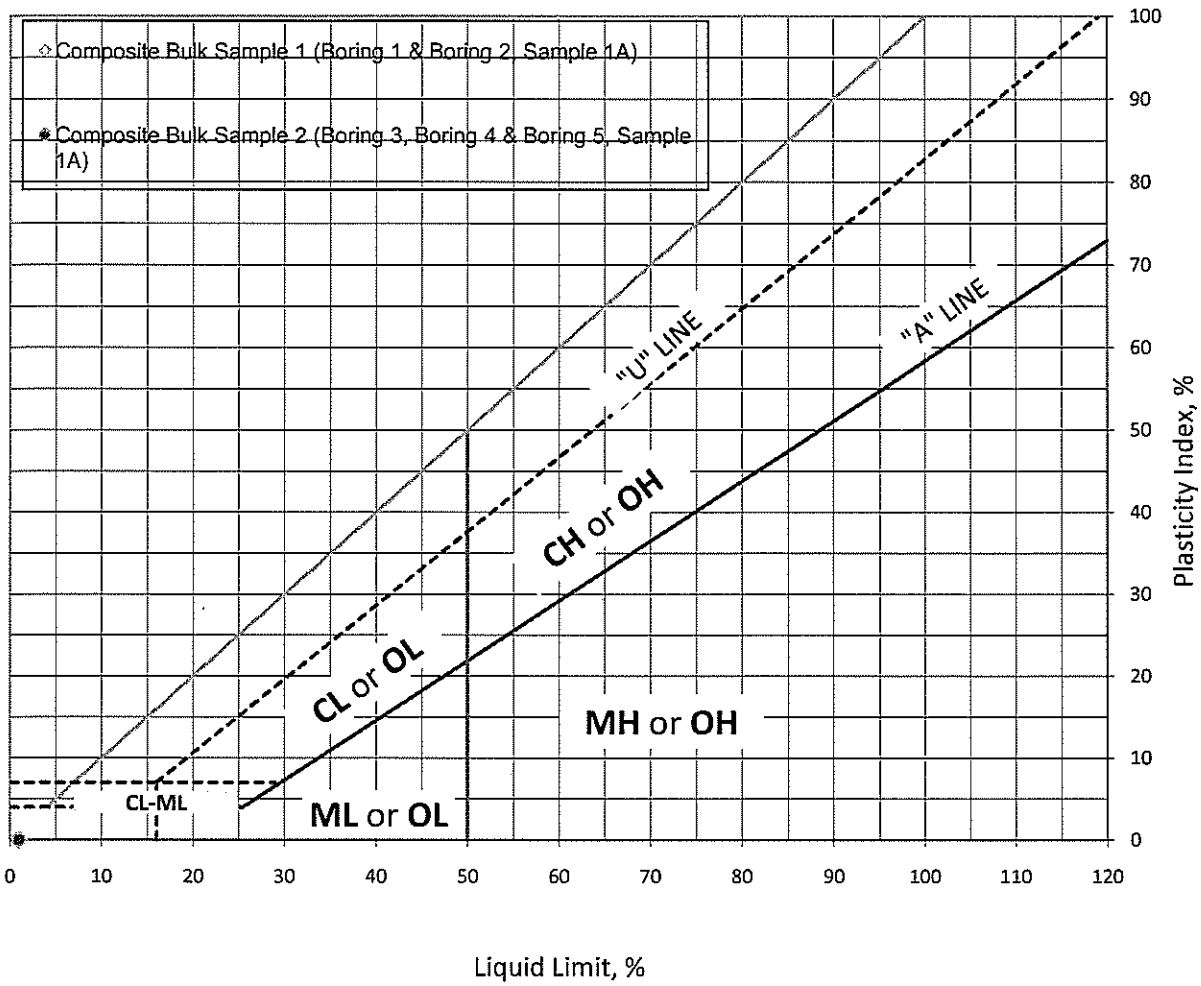

Symbol	Sample Source	Classification	Liquid Limit, %	Plastic Limit, %	Plasticity Index, %	% Passing # 200 Sieve
◇	Composite Bulk Sample 1 (Boring 1 & Boring 2, Sample 1A)	SM	NP	NP	NP	40
●	Composite Bulk Sample 2 (Boring 3, Boring 4 & Boring 5, Sample 1A)	SM	NP	NP	NP	34

PACIFIC SOILS ENGINEERING & TESTING
GEOTECHNICAL CONSULTANTS
(ATTERBERG LIMITS)
ASTM D 4318

PROJECT:	FY-12 MCAF Project SKAW059101
	PRTC Red Horse Cantonment Ops Facility
LOCATION:	Northwest Field, AAFB Guam
CLIENT:	NC Macario & Associates, Inc.

Job Number:	427-009R	Approved by:	mec/pbc	Date: 04.01.2011	Plate: A - 4

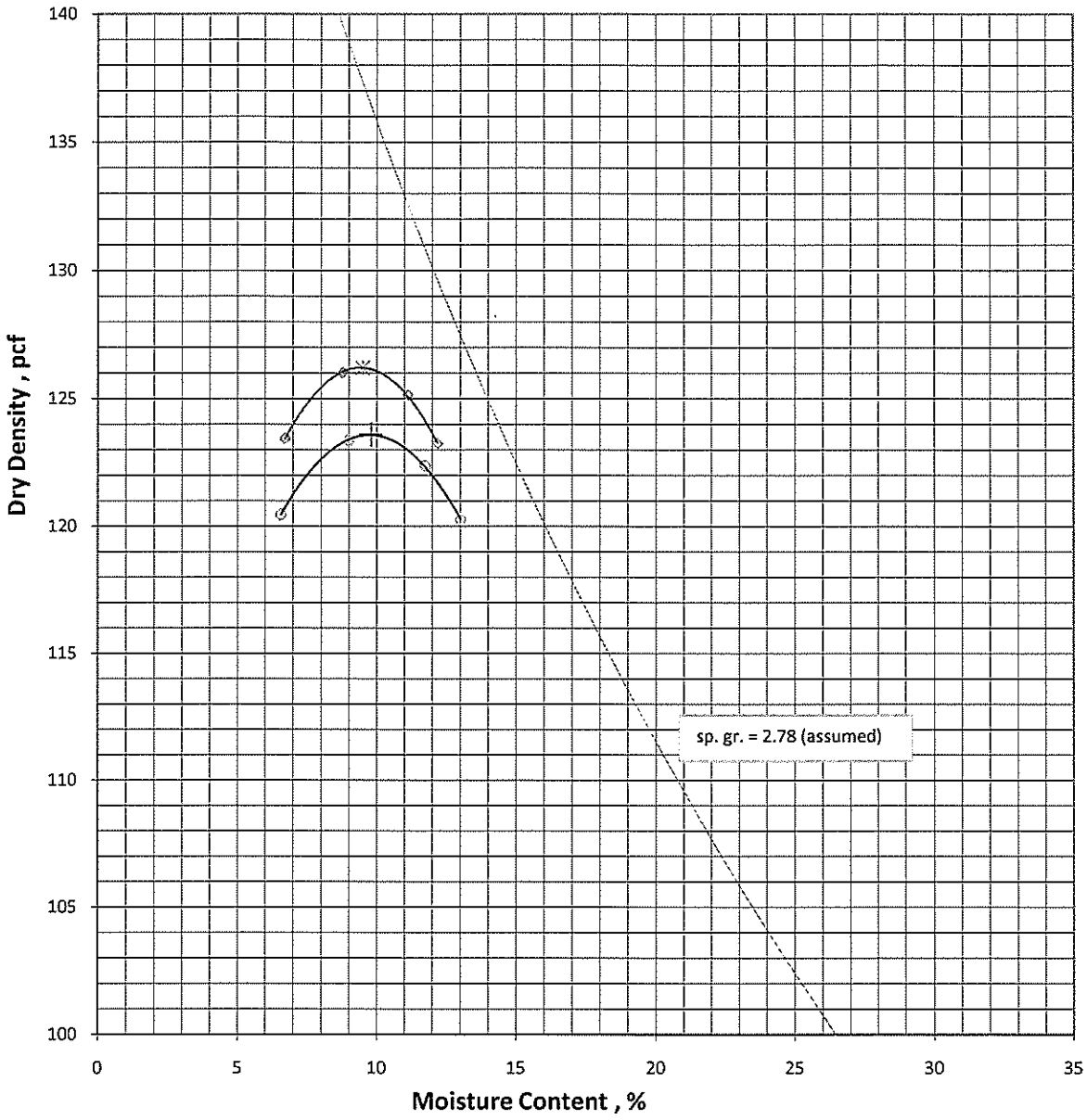

Sample Source:	Composite Bulk Sample 1 (Boring 1, Sample 1A & Boring 2, Sample 1A)	
Classification:	White Silty Coral Sand with Gravel (SM)	
TEST RESULTS		
Maximum Dry Density:	126.1	pcf
Optimum Moisture Content:	9.5	%

PACIFIC SOILS ENGINEERING & TESTING
GEOTECHNICAL CONSULTANTS
(MOISTURE-DENSITY RELATIONS)
ASTM D 1557, Method A

PROJECT:	PRTC RHS Cantonment Ops Facility
LOCATION:	Northwest Field, AAFB, Guam
CLIENT:	N.C. Macario & Associates

Job Number:	427-009R	Approved by:	pbc/mec	Date: 04.01.2011	Plate: **A-5A**

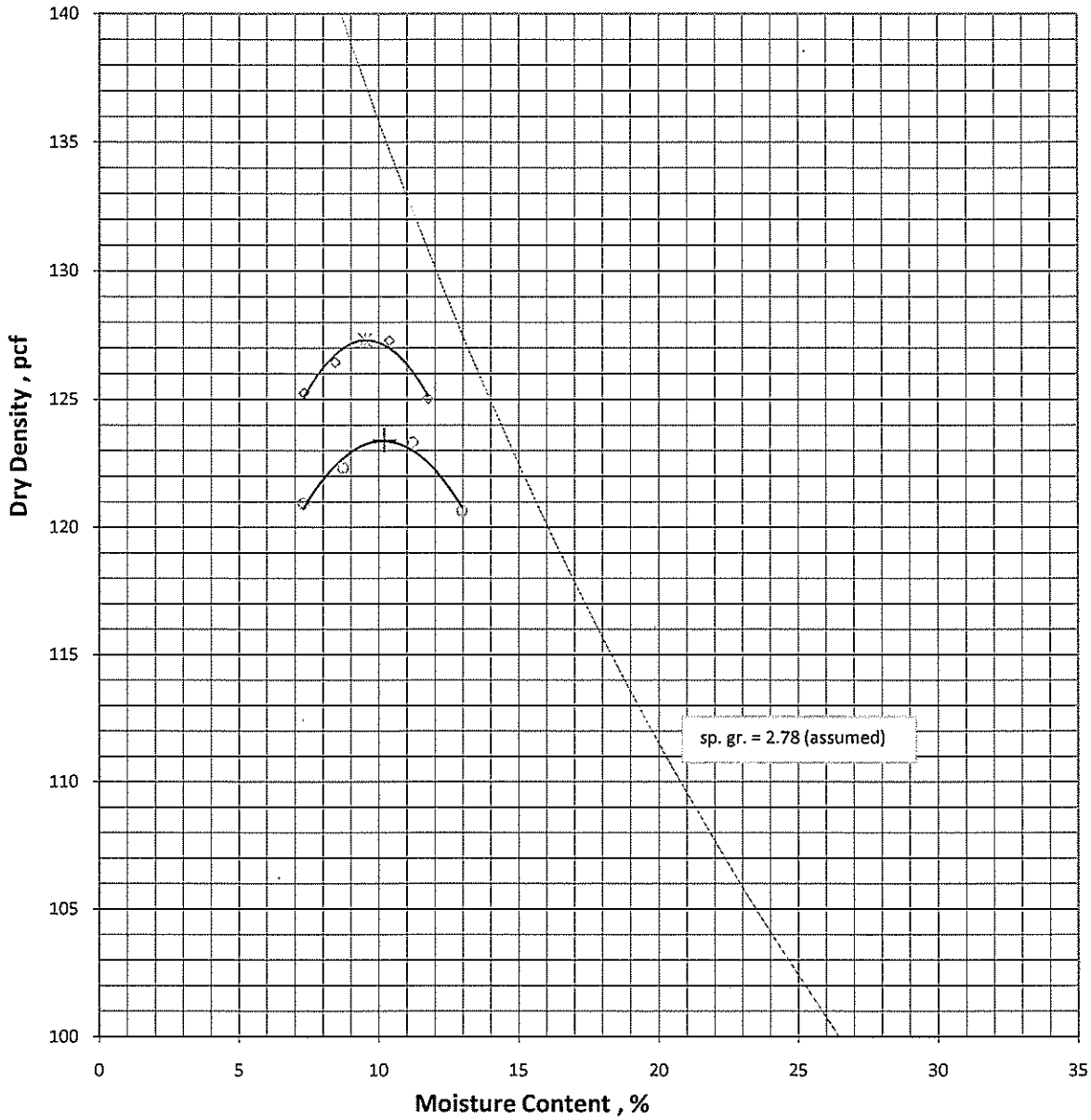

Sample Source:	Composite Bulk Sample 2 (Boring 3, Sample 1A, Boring 4, Sample 1A & Boring 5, Sample 1A)	
Classification:	White Silty Coral Sand with Gravel (SM)	
TEST RESULTS		
Maximum Dry Density:	127.3	pcf
Optimum Moisture Content:	9.5	%

PACIFIC SOILS ENGINEERING & TESTING
GEOTECHNICAL CONSULTANTS
(MOISTURE-DENSITY RELATIONS)
ASTM D 1557, Method A

PROJECT:	PRTC RHS Cantonment Ops Facility
LOCATION:	Northwest Field, AAFB, Guam
CLIENT:	N.C. Macario & Associates

Job Number:	427-009R	Approved by:	pbc/mec	Date:	04.01.2011	Plate:	**A-5B**

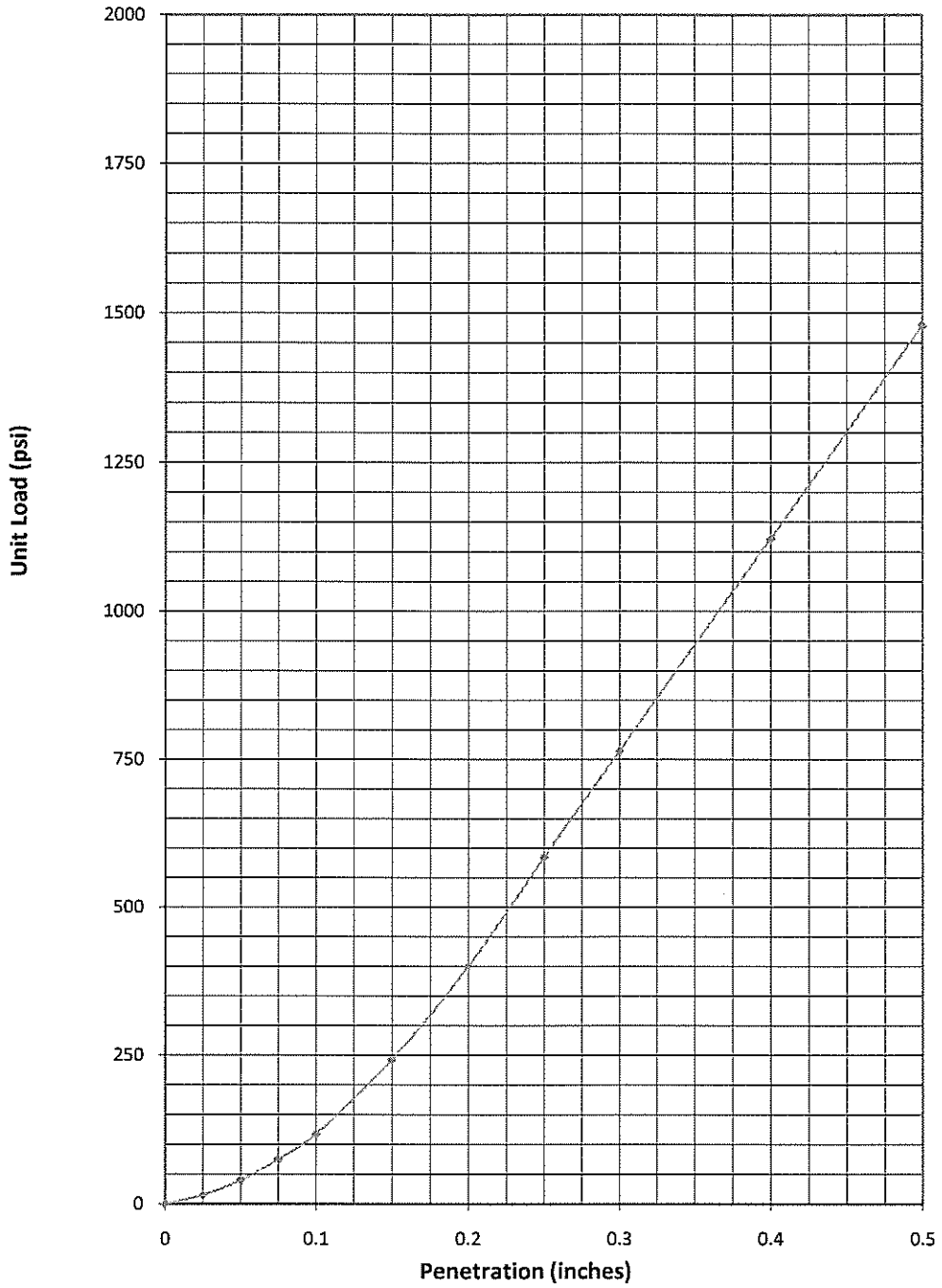

Sample Source: Composite Bulk Sample 1 (Boring 1, Sample 1A & Boring 2, Sample 1A)	
Classification: White Silty Coral Sand with Gravel (SM)	
TEST RESULTS	
Compaction: ASTM D 1557	Condition of Sample: 4 days soaked
Dry Density, before soaking: 123.51 pcf	Bearing Ratio: 48 %
Moisture Content at Compaction: 10.77 %	Swell: -0.02 %
PACIFIC SOILS ENGINEERING & TESTING GEOTECHNICAL CONSULTANTS (CALIFORNIA BEARING RATIO TEST REPORT) ASTM D 1883	PROJECT: PRTC RHS Cantonment Ops Facility LOCATION: Northwest Field, AAFB, Guam CLIENT: N.C. Macario & Associates
Job Number: 427-009R Approved by: pbc/mec	Date: 04.01.2011 Plate: **A-6A**

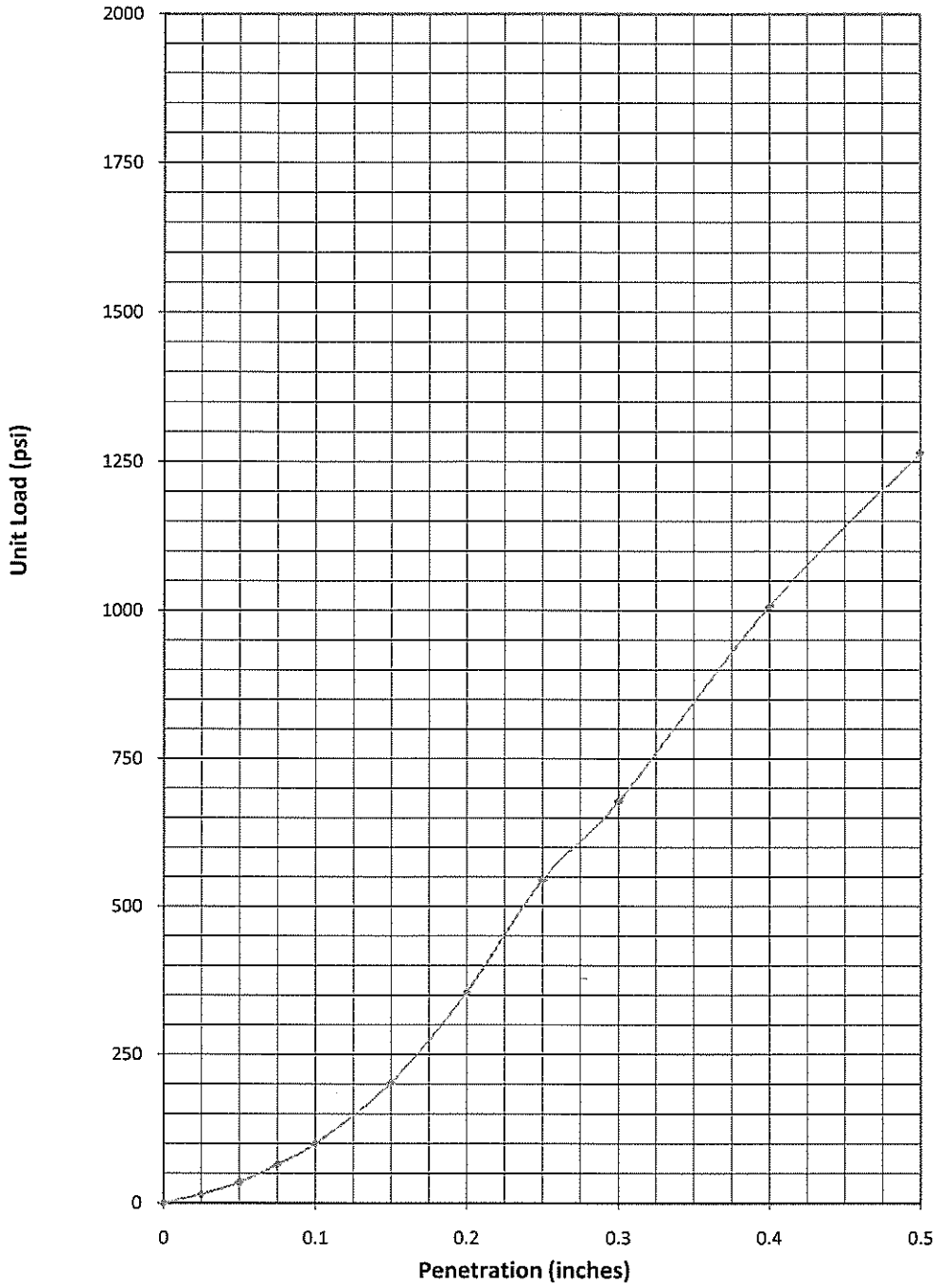

Sample Source:	Composite Bulk Sample 2 (Boring 3, Sample 1A, Boring 4, Sample 1A & Boring 5, Sample 1A)
Classification:	White Silty Coral Sand with Gravel (SM)

TEST RESULTS

Compaction:	ASTM D 1557	Condition of Sample:	4 days soaked
Dry Density, before soaking:	123.60 pcf	Bearing Ratio:	43 %
Moisture Content at Compaction:	11.24 %	Swell:	-0.09 %

PACIFIC SOILS ENGINEERING & TESTING
GEOTECHNICAL CONSULTANTS
(CALIFORNIA BEARING RATIO TEST REPORT)
ASTM D 1883

PROJECT:	PRTC RHS Cantonment Ops Facility
LOCATION:	Northwest Field, AAFB, Guam
CLIENT:	N.C. Macario & Associates

Job Number:	427-009R	Approved by:	pbc/mec	Date: 04.01.2011	Plate: **A-6B**

	MAJOR DIVISIONS		GRAPHIC SYMBOL	LETTER SYMBOL	TYPICAL DESCRIPTIONS
COARSE GRAINED SOILS	GRAVEL AND GRAVELLY SOILS	CLEAN GRAVELS (LITTLE OR NO FINE)		GW	WELL GRADED GRAVELS, GRAVEL SAND MIXTURES, LITTLE OR NO FINES
				GP	POORLY GRADED GRAVELS, GRAVEL SAND MIXTURES, LITTLE OR NO FINES
	MORE THAN 50% OF COARSE FRACTION RETAINED ON NO.4 SIEVE	GRAVEL WITH FINES (APPLICABLE AMOUNT OF FINES)		GM	SILTY GRAVELS, GRAVEL SAND SILT MIXTURES
				GC	CLAYEY GRAVELS, GRAVEL SAND CLAY MIXTURES
MORE THAN 50% OF MATERIALS IS LARGER THAN NO. 200 SIEVE SIZE	SAND AND SANDY SOILS	CLEAN SAND (LITTLE OR NO FINES)		SW	WELL-GRADED SANDS, GRAVELLY SANDS, LITTLE OR NO FINES
				SP	POORLY-GRADED SANDS, GRAVELLY SANDS, LITTLE OR NO FINES
	MORE THAN 50% OF COARSE FRACTION PASSING NO. 4 SIEVE	SANDS WITH FINES (APPLICABLE AMOUNT OF FINES)		SM	SILTY SANDS, SAND SILT MIXTURES
				SC	CLAYEY SANDS, SAND-CLAY MIXTURES
FINE GRAINED SOILS	SILTS AND CLAYS	LIQUID LIMIT LESS THAN 50		ML	INORGANIC SILTS AND VERY FINE SANDS, ROCK FLOUR, SILTY OR CLAYEY FINE SANDS OR CLAYEY SILTS WITH SLIGHT PLASTICITY
				CL	INORGANIC CLAYS OF LOW TO MEDIUM PLASTICITY, GRAVELLY CLAYS, SANDY CLAYS, SILTY CLAYS, LEAN CLAYS
				OL	ORGANIC SILTS AND ORGANIC SILTY CLAYS OF LOW PLASTICITY
MORE THAN 50% OF MATERIALS IS SMALLER THAN NO. 200 SIEVE SIZE	SILTS AND CLAYS	LIQUID LIMIT GREATER THAN 50		MH	INORGANIC SILTS, MICACEOUS OR DIATOMACEOUS FINE SAND OR SILTY SOILS
				CH	INORGANIC CLAYS OF HIGH PLASTICITY, FAT CLAYS
				OH	ORGANIC CLAYS OF MEDIUM TO HIGH PLASTICITY, ORGANIC SILTS
HIGHLY ORGANIC SOILS				PT	PEAT, HUMUS SWAMP SOILS WITH HIGH ORGANIC CONTETS

NOTE: DUAL SYMBOLS ARE USED TO INDICATE BORDERLINE SOIL CLASSIFICATIONS

UNIFIED SOIL CLASSIFICATION SYSTEM

PACIFIC SOILS ENGINEERING & TESTING

Attachment B

Building Information Modeling (BIM)

United States Air Force Center for Engineering and the Environment

"ATTACHMENT F" -- BUILDING INFORMATION MODELING (BIM) REQUIREMENTS

Issued On: 19 APR 11 for FY11 and beyond

BIM Scope of Services:

- The customer will receive the BIM model in the format used by the winning firm. Once reviewed and approved, the BIM data will serve as the parent for versions applicable to projects that are BIM software specific.
- Cost estimating, project scheduling, and Construction Operations Building Information Exchanges (COBIE) initiatives are Contractor implementation electives. If the Contractor proposes to implement one or more electives in its accepted contract or task order proposal, those criteria become a contract requirement.

Section 1 - Submittal Format

1.1 Design Deliverables Develop all designs using Building Information Modeling (BIM). Design submittal drawings shall be [full-Size] (A1, ANSI D, etc.) size, suitable for half-size (11"x17") scaled reproduction.

Section 2 – Design Requirements

2.1 Drawings Deliver CAD files used for the creation of the Construction Documents Drawings per the NAVFAC Marianas criteria and as noted herein. Specification of a CAD file format for these Drawings does not limit which BIM application(s) or software(s) may be used for project development and execution.

2.2 BIM Model and Facility Data [Contractor AE] shall select BIM application(s) and software(s) and develop project designs using commonly accepted BIM software that is compatible with the latest International Alliance for Interoperability (IAI) Industry Foundation Class (IFC) standards. Use 3D graphic model(s) (the "Model") and associated intelligent attribute data ("Facility Data") created by this software to produce accurate Construction Documents. The Air Force would like to capitalize on its current AF Blanket Purchase Agreement (BPA) for (and anticipates the use of) BIM software like Autodesk Revit 2010 for FY11. Requests will be considered should the Air Force user require a different format, however all facility design data shall be fully compatible with the user's existing format. The submitted Model shall be in a native file format with linked performance based specifications, interactive for the user, and the model shall be capable of being converted to an AF standard platform or interoperable file format like IFCs.

2.2.1 IFC Coordination View The Contractor's selected BIM application(s) and software(s) must be certified in the IFC Coordination View (2x3 or better. See www.iai-tech.org). Submit any deviations from or additions to the IFC property sets for any new spaces, systems, and equipment for Government approval.

2.2.2 NOT USED.

2.2.3 Execution/Implementation Plan Prior to the Initial Design Conference, submit an Execution/Implementation Plan. Use the provided template available online at http://www.wbdg.org/references/afbim_tools.php. The purpose is to document the viability of the BIM design, production, coordination, construction, and documentation. *NOTE: It is preferable to the government to have bidding firms accomplish their draft implementation plan. This way, the plan would be used as a discriminator for possible award to the firms who propose maximum BIM use throughout the facility lifecycle. Regardless if the BIM Implementation plan*

is accomplished before or after award, the plan shall include using the BIM data for the minimum requirements delineated in the Air Force Design Instruction.

2.2.3.1 The Execution/Implementation Plan shall identify how the BIM data shall be managed and interoperate (data storage, sharing, viewing, quality control parameters in Section 2.3 Quality Control, and updating, as necessary) among all Contractor team members.

2.2.3.2 Conduct an Execution/Implementation Plan demonstration at the Initial Design Conference to review the Implementation Plan for clarification, and to verify the functionality of Model technology workflow and processes. The Government shall confirm acceptability of the Plan or propose additional processes or activities necessary to be incorporated into the Plan. If modifications are required, the Contractor shall execute the modifications and resubmit the final Implementation Plan for Government acceptance. At the determination of the Contracting office, there will be no payment for design or construction until the Plan is acceptable to the Government. The Government may also withhold payment for design and construction for unacceptable performance in executing the Execution/Implementation Plan.

2.2.4 Model Components The Model shall include the following, subject to Government concurrence:

2.2.4.1 Project Specific BIM Facility Data. Develop the Facility Data, consisting of a set of intelligent elements for the Model (e.g., doors, air handlers, electrical panels). This Facility Data shall include all material definitions, qualities, and attributes that are necessary for the Project facility design.

2.2.4.2 Project Specific Minimum Requirements. The Contractor's Model shall include, at a minimum, the requirements of Section 4 below. The Government must agree with any proposed modifications to minimum requirements before incorporation into the Model.

2.2.4.3 Facility Data Output. Each submittal under Section 3 shall include a list of Construction Documents (e.g., drawings, elevations, design sections and schedules, details) that shall be produced from the Facility Data and updated as necessary.

2.2.4.4 Model Granularity. Models may vary in level of detail for individual elements within a model, but at a minimum must include all features that would be included on a quarter inch (1/4" = 1'0") scaled drawing (e.g. at least 1/16th, 1/8th and 1/4th), or appropriately scaled civil drawings.

2.3 Quality Control (QC) Implement QC parameters for the Model, including:

2.3.1 Standards Checks QC checking performed to ensure that the fonts, dimensions, line styles, levels and other contract document formatting issues are followed per the A/E/C CADD Standard.

2.3.2 Model Integrity Checks QC validation used to ensure that the Project Facility Data set has no undefined, incorrectly defined or duplicated elements. Report non-compliant elements and provide justification acceptable to the Government if allowed to remain within the Model.

2.3.3 Other Parameters Develop such other QC parameters as Contractor deems appropriate for the Project and provide to the Government for concurrence.

2.4 Design and Construction Reviews Perform design and construction reviews at each submittal stage under Section 3 to test the Model, including:

2.4.1 Visual Checks Checking to ensure the design intent has been followed and that there are no unintended elements in the Model.

2.4.2 Interference Management Checks Locating conflicting spatial data in the Model where two elements are occupying the same physical space. Log hard interferences (e.g., mechanical vs. structural or mechanical vs. mechanical overlaps in the same location) and soft interferences (conflicts regarding service access, fireproofing, insulation) in a written report and disposition.

2.4.3 IFC Coordination View Provide an IFC Coordination View in IFC Express format for all deliverables. Provide exported property set data for all IFC supported named building elements.

2.4.4 Other Parameters Develop such other Review parameters as the Contractor deems appropriate for the Project and provide to the Government for concurrence.

Section 3 – Design Stage Submittal Requirements

3.1 Submittal Requirements

3.1.1 Compliance Provide submittals in compliance with Implementation Plan deliverables at stages as described hereinafter.

3.1.2 Reports Provide a Contractor-certified written report with each design submittal, confirming that consistency checks as identified in Paragraphs 2.3 and 2.4 have been completed for the design submittal. This report shall be discussed as part of the design review conference and shall address cross-discipline interferences, if any.

3.1.3 Model Data Following Government review and concurrence at each Stage in Paragraphs 3.3 through 3.5, provide the Government a 3-D model data. Possible options include: NavisWorks, Adobe 3D PDF 7.0 (or later), Google Earth KMZ or equivalent format. The Government may request other formats if needed to address Project-specific requirements.

3.2 Preliminary Implementation Review Prior to the first Interim Design Submittal or Over-the-Shoulder Progress Review, demonstrate preliminary development of Model components and Facility Data identified in Paragraph “Model Components”. Review the Model with the Government for conformity to program, massing, circulation, fire protection, security and sustainability Project requirements consistent with the Implementation Plan.

3.3 Interim Design Submittals

3.3.1 BIM and CAD Data The Model shall include architectural, interior design, structural, mechanical, electrical, plumbing and fire protection systems and Facility Data, as applicable to the Interim Design package(s). Provide the Model, Facility and CAD Data files in native and interoperable formats per Implementation Plan requirements, and any rendering files, on DVD/CD-ROM.

3.4 Final Design Submissions and Design Complete Submittals The Model shall include all design elements identified in Section 4, unless otherwise agreed by the Government. Secure Government acceptance of the Model from the Government before proceeding with commencement of construction. Provide the updated Model, Facility, CAD Data and rendering files on DVD/CD-ROM.

3.5 Construction Submittals – Over-The-Shoulder Progress Reviews Periodic quality control meetings or construction progress review meetings shall include quality control reviews on the implementation and use of the Model, including interference management and design change tracking information.

3.6 Final As-Builts BIM and CAD Data Submit the final Model, Facility, and CAD Data files reflecting as-built conditions for Government Approval.

Section 4 – BIM Model Minimum Requirements and Output

4.1 General Provisions The deliverable Model shall be developed to include the systems described below as they would be built and the processes of installing them, and to reflect final as-built conditions. The deliverable model at the interim design stage and at the final design stage ("released for construction") shall be developed to include as many of the systems described below as are necessary and appropriate at that design stage.

4.2 Architectural/Interior Design The Architectural systems Model may vary in level of detail for individual elements, but at a minimum must include all features that would be included on a quarter inch (1/4"=1'0") scaled drawing. Additional minimum Model requirements include:

4.2.1 Space Measurements The Model shall include spaces defining accurate net square footage and net volume, and holding data for the room finish schedule for including room names and numbers. Include Programmatic Information provided by the Government or validated program to verify design space against programmed space, using this information to validate area quantities.

4.2.2. Walls and Curtain Walls Each wall shall be depicted to the exact height, length, width and ratings (thermal, acoustic, fire) to properly reflect wall types. The Model shall include all walls, both interior and exterior, and the necessary intelligence to produce accurate plans, sections and elevations depicting these design elements

4.2.3 Doors, Windows and Louvers Doors, windows and louvers shall be depicted to represent their actual size, type and location. Doors and windows shall be modeled with the necessary intelligence to produce accurate window and door schedules.

4.2.4 Roof The Model shall include the roof configuration, drainage system, major penetrations, specialties, and the necessary intelligence to produce accurate plans, building sections and generic wall sections where roof design elements are depicted.

4.2.5 Floors The floor slab shall be developed in the structural Model and then referenced by the architectural Model for each floor of the Project building.

4.2.6 Ceilings All heights and other dimensions of ceilings, including soffits, ceiling materials, or other special conditions shall be depicted in the Model with the necessary intelligence to produce accurate plans, building sections and generic wall sections where ceiling design elements are depicted.

4.2.7 Vertical Circulation All continuous vertical components (i.e., non-structural shafts, architectural stairs, handrails and guardrails) shall be accurately depicted and shall include the necessary intelligence to produce accurate plans, elevations and sections in which such design elements are referenced.

4.2.8 Architectural Specialties and Woodwork All architectural specialties (i.e., toilet room accessories, toilet partitions, grab bars, lockers, and display cases) and woodwork (i.e., cabinetry and counters) shall be accurately depicted with the necessary intelligence to produce accurate plans, elevations and sections in which such design elements are referenced.

4.2.9 Signage The Model shall include all signage and the necessary intelligence to produce accurate plans and schedules.

4.2.10 Schedules Provide door, window, hardware, sets using BHMA designations, flooring, and wall finish, and signage schedules from the Model, indicating the type, materials and finishes used in the design.

4.3 Furniture/Fixtures/Equipment (FFE) 3D representation of FFE elements is preferred. For projects with an extensive systems furniture layout that may impact BIM system performance the Contractor will contact the Government for consideration of 2D representation. The FFE systems Model may vary in level of detail for individual elements, but at a minimum must include all features that would be included on a quarter inch (1/4”=1’0”) scaled drawing. Additional minimum Model requirements include:

4.3.1 Furniture (INCLUDE AS REQUIRED) The furniture systems Model may vary in level of detail for individual elements within a Model, but at a minimum must include all features that would be included on a quarter inch (1/4”=1’0”) scaled drawing, and shall include all relevant office equipment and furniture system layouts, with necessary intelligence to produce accurate plans, sections, perspectives and elevations necessary to completely depict furniture systems locations and sizes. Almost every FFE is a product that doesn’t require accurate sections, perspectives and elevations, but can be illustrated generically and perhaps by color, and long as the size is accurately depicted where necessary.

4.3.1.1 Systems Coordination. Furniture that makes use of electrical, data, plumbing or other features shall include the necessary intelligence to produce coordinated documents and data.

4.3.2 Fixtures and Equipment Fixtures and equipment shall be depicted to meet layout requirements with the necessary intelligence to produce accurate plans, elevations, sections and schedules depicting their configuration

4.3.3 Schedules Provide furniture and equipment schedules from the model indicating the materials, finishes, mechanical, and electrical requirements.

4.4 Structural The structural systems Model may vary in level of detail for individual elements, but at a minimum must include all features that would be included on a quarter inch (1/4”=1’0”) scaled drawing. Additional minimum Model requirements include:

4.4.1 Foundations All necessary foundation and/or footing elements, with necessary intelligence to produce accurate plans and elevations.

4.4.2 Floor Slabs Structural floor slabs shall be depicted, including all necessary recesses, curbs, pads, closure pours, and major penetrations accurately depicted.

4.4.3 Structural Steel All steel columns, primary and secondary framing members, and steel bracing for the roof and floor systems (including decks), including all necessary intelligence to produce accurate structural steel framing plans and related building/wall sections.

4.4.4 Cast-in-Place Concrete All walls, columns, and beams, including necessary intelligence to produce accurate plans and building/wall sections depicting cast-in-place concrete elements.

4.4.5 Expansion/Contraction Joints Joints shall be accurately depicted.

4.4.6 Stairs The structural Model shall include all necessary openings and framing members for stair systems, including necessary intelligence to produce accurate plans and building/wall sections depicting stair design elements.

4.4.7 Shafts and Pits The structural Model shall include all necessary shafts, pits, and openings, including necessary intelligence to produce accurate plans and building/wall sections depicting these design elements.

4.5 Mechanical The mechanical systems Model may vary in level of detail for individual elements, but at a minimum must include all features that would be included on a quarter inch (1/4”=1’0”) scaled drawing. Additional minimum Model requirements include:

4.5.1 HVAC All necessary heating, ventilating, air-conditioning and specialty equipment, including air distribution ducts for supply, return, and ventilation and exhaust ducts, including control system, registers, diffusers, grills and hydronic baseboards with necessary intelligence to produce accurate plans, elevations, building/wall sections and schedules. All piping larger than 1.5” diameter shall be modeled.

4.5.1.1 Mechanical Piping All necessary piping and fixture layouts, and related equipment, including necessary intelligence to produce accurate plans, elevations, building/wall sections, and schedules. All piping larger than 1.5” diameter shall be modeled.

4.5.2 Plumbing All necessary plumbing piping and fixture layouts, floor and area drains, and related equipment, including necessary intelligence to produce accurate plans, elevations, building/wall sections, riser diagrams, and schedules. All piping larger than 1.5” diameter shall be modeled.

4.5.3 Equipment Clearances All HVAC and Plumbing equipment clearances shall be modeled for use in interference management and maintenance access requirements.

4.5.4 Elevator Equipment The Model shall include the necessary equipment and control system, including necessary intelligence to produce accurate plans, sections and elevations depicting these design elements.

4.6 Electrical/Telecommunications The electrical systems Model may vary in level of detail for individual elements, but at a minimum must include all features that would be included on a quarter inch (1/4”=1’0”) scaled drawing. Additional minimum Model requirements include:

4.6.1 Interior Electrical Power and Lighting All necessary interior electrical components (i.e., lighting, receptacles, special and general purpose power receptacles, lighting fixtures, panelboards and control systems), including necessary intelligence to produce accurate plans, details and schedules. Cable tray routing shall be modeled without detail of cable contents. Lighting and power built into furniture/equipment shall be modeled.

4.6.2 Special Electrical Systems All necessary special electrical components (i.e., security, Mass Notification, Public Address, nurse call and other special occupancies, and control systems), including necessary intelligence to produce accurate plans, details and schedules.

4.6.3 Grounding Systems All necessary grounding components (i.e., lightning protection systems, static grounding systems, communications grounding systems, bonding), including necessary intelligence to produce accurate plans, details and schedules.

4.6.4 Communications All existing and new communications service controls and connections, both above ground and underground with necessary intelligence to produce accurate plans, details and schedules. Cable tray routing shall be modeled without detail of cable contents. Communications conduit larger than 1.5” shall be modeled.

4.6.5 Exterior Building Lighting All necessary exterior lighting with necessary intelligence to produce accurate plans, elevations and schedules. The exterior building lighting Model shall include all

necessary lighting, relevant existing and proposed support utility lines and equipment required with necessary intelligence to produce accurate plans, details and schedules.

4.6.6 Equipment Clearances All lighting and communications equipment clearances and no-fly zones shall be modeled for use in interference management and maintenance access requirements.

4.7 Fire Protection The fire protection system Model may vary in level of detail for individual elements, but at a minimum must include all features that would be included on a quarter inch (1/4"=1'0") scaled drawing. Additional minimum Model requirements include:

4.7.1 Fire Protection System All relevant fire protection components (i.e., branch piping, sprinkler heads, fittings, drains, pumps, tanks, sensors, control panels) with necessary intelligence to produce accurate plans, elevations, building/wall sections, riser diagrams, and schedules. All fire protection piping shall be modeled.

4.7.2 Fire Alarms Fire alarm/mass notification devices and detection system shall be indicated with necessary intelligence to produce accurate plans depicting them.

4.8 Civil The civil Model may vary in level of detail for individual elements, but at a minimum must include all features that would be included on a one inch (1"=100') scaled drawing. Additional minimum Model requirements include:

4.8.1 Digital Terrain Model (DTM). Model all relevant site conditions and proposed grading, including necessary intelligence to produce accurate Project site topographical plans and cross sections.

4.8.2 Drainage Model all existing and new drainage piping, including upgrades thereto, including necessary intelligence to produce accurate plans and profiles for the Project site.

4.8.3 Storm Water and Sanitary Sewers Model all existing and new sewer structures and piping, including upgrades thereto, on the Project site with necessary connections to mains or other distribution points as appropriate, including necessary intelligence to produce accurate plans and profiles for the Project site.

4.8.4 Utilities Model all necessary new utilities connections from the Project building(s) to the existing or newly-created utilities, and all existing above ground and underground utility conduits, including necessary intelligence to produce accurate plans and site-sections.

4.8.5 Roads and Parking Model all necessary roadways and parking lots or parking structures, including necessary intelligence to produce accurate plans, profiles and cross-sections.

Section 5 - Ownership and Rights in Data

5.1 Ownership The Government has ownership of, and rights to, to all CAD files, BIM Model, and Facility Data developed for the Project in accordance with FAR Part 27 at the date of Closeout Submittal. The Government may make use of this data following any deliverable.

Section 6 – Contractor Electives

6.1 Applicable Criteria If the Contractor elected to include one or more of the following features as an elective in its accepted contract proposal for additional credit during the source selection, as described in the proposal submission requirements and evaluation criteria, the following criteria are requirements, as applicable to those elective feature(s).

6.2 COBIE Compliance The National Building Information Model Standard (NBIMS) COBIE format is the preferred electronic exchange format. For more information on COBIE, see http://www.wbdg.org/resources/cobie.php. If used, the Model and Facility Data for the Project shall fulfill COBIE requirements.

6.3 Project Scheduling using the Model In the Implementation Plan and during the Preliminary Implementation Review, provide an overview of the use of BIM in the development and support of the project construction schedule.

6.3.1 Submittal Requirements During the Submittal stages, the Contractor shall deliver the construction schedule with information derived from the Model.

6.3.1.2 Construction Submittals – Over-The-Shoulder Progress Reviews. Periodic quality control meetings or construction progress review meetings shall include quality control reviews on the implementation and use of the Model for project scheduling.

6.4 Cost Estimating In the Implementation Plan and during the Preliminary Implementation Review, provide an overview of the use of BIM in the development and support of cost estimating requirements, or other applications such as cost analysis and estimate validation.

6.4.1 Submittal Requirements During the Submittal stages, the Contractor shall deliver cost estimating information derived from the Model.

6.4.2 Extracted Quantities Sub system level extracted quantities from the BIM for use within the estimate shall be provided according to how detailed line items or tasks should be installed/built so that accurate costs can be developed and/or reflected. Therefore, when developing a BIM, the designer shall be cognizant of what tasks need to be separated appropriately at the beginning stages of model development, such as tasks done on the first floor versus the same task on higher floors that will be more labor intensive and therefore need to have a separate quantity and be priced differently. Tasks and their extracted quantities from the BIM shall be broken done by their location (proximity in the structure) as well as the complexity of its installation.

6.4.3 Model Limitations At all design stages it shall be understood that BIM output as described in this document will not generate all quantities that are necessary in order to develop a complete and accurate cost estimate of the project based on the design. An example of this would be plumbing that is less than 1.5" diameter and therefore not expected to be modeled due to granularity; this information is commonly referred to as The Gap. Quantities from The Gap and their associated costs shall be included in the final project actual cost estimates as well.

End of Attachment F

Attachment C

LEED NC V_3

LEED 2009 for New Construction and Major Renovation

Project Checklist

Project Name: PRTC REDHORSE Cantonments Operations Facility

Date: APRIL 2011

9	14	3	Sustainable Sites		Possible Points: 26	RESPONSIBLE PARTIES	EXPLANATION AND RESPONSE
Y	N	?					
1			Credit 1	Site Selection	1	government	To avoid the development of inappropriate sites and reduce the environmental impact from the location of a building on a site. Site is not near a wetland, farmland, habitat, near a water body or a designated parkland. Site is within Air Force Installation with approved environmental assessment.
	5		Credit 2	Development Density and Community Connectivity	5	team	To channel development to urban areas with existing infrastructure, protect greenfields and preserve habitat and natural resources. These points are unlikely because the project is away from community services.
		1	Credit 3	Brownfield Redevelopment	1	government	To rehabilitate damaged/contaminated site. Government needs to verify if the site meets the brownfield criteria.
	6		Credit 4.1	Alternative Transportation—Public Transportation Access	6	team/government	To reduce pollution and land development impacts from automobile use. The site is not accessible via public transportation (rail/bus lines).
1			Credit 4.2	Alternative Transportation—Bicycle Storage and Changing Rooms	1	team/government	To reduce pollution and land development impacts from automobile use. A bike rack will be provided (for 5% of occupants); shower/changing facility provided within building.
	3		Credit 4.3	Alternative Transportation—Low-Emitting and Fuel-Efficient Vehicles	3	government	To reduce pollution and land development impacts from automobile use. These points may be achieved by providing 5% preferred parking for low-emitting/fuel-efficient vehicles of the vehicle parking capacity; or by providing low-emitting and fuel efficient vehicles for 3% of full-time equivalent (FTE) occupants. Parking not in project scope.
2			Credit 4.4	Alternative Transportation—Parking Capacity	2	contractor	To reduce pollution and land development impacts from automobile use. This points may be achieved by sizing the parking capacity to meet but not exceed the parking requirements, by providing preferred parking for carpools or vanpools for 5% of the parking spaces, or providing no new parking. The project will not construct any new parking.
		1	Credit 5.1	Site Development—Protect or Restore Habitat	1	government	To conserve existing natural areas and restore damaged areas to provide habitat and promote biodiversity. This point can be achieved by restoring or protecting a minimum of 50% of the site (excluding building footprint) or 20% of the total site (including building footprint), whichever is greater, with native or adapted vegetation. Government to verify if NWF Master Plan addresses protection/restoration of habitat.
		1	Credit 5.2	Site Development—Maximize Open Space	1	government	To promote biodiversity by providing a high ratio of open space to development footprint. This point can be achieved by providing vegetated open space area adjacent to the building that is equal in area to the building footprint. Government to verify if NWF Master Plan addresses open space that meets LEED criteria.
1			Credit 6.1	Stormwater Design—Quantity Control	1	civil	To limit disruption to natural hydrology by reducing impervious cover, increasing on-site infiltration, reducing or eliminating pollution from stormwater runoff and eliminating contaminants. This point should be achievable because Andersen AFB has a centralized on-base stormwater management system. Civil to verify.
1			Credit 6.2	Stormwater Design—Quality Control	1	civil	To limit disruption and pollution of natural water flows by managing stormwater runoff. This point should be achievable because Andersen AFB has a centralized on-base stormwater management system. Civil to verify.

1			Credit 7.1	Heat Island Effect—Non-roof	1	team/government	To reduce heat islands to minimize impacts on microclimates and human and wildlife habitat. This point can be achieve by using hardscape materials with an SRI of at least 29; and providing shade trees.
1			Credit 7.2	Heat Island Effect—Roof	1	architectural	To reduce heat islands to minimize impacts on microclimates and human and wildlife habitat. This point can be achieve by using roofing materials with an SRI of at least 78.
1			Credit 8	Light Pollution Reduction	1	electrical & architectural	To minimize light traspass from the building and site, reduce sky-glow to increase night sky access, improve nighttime visibility through glare reduction and reduce development impact from lighting on nocturnal environment. This point will be achieved by providing low glare and down lighting on exterior and limit emitting light from buildings.
8	2	0	**Water Efficiency**	Possible Points:	**10**		
Y	N	?					
Y			Prereq 1	Water Use Reduction—20% Reduction		mechanical	To increase water efficiency within buildings to reduce the burden on municipal water supply and wastewater systems. This will be accomplished by employing strategies that in aggregate use 20% less water than the water use baseline calculated for the building (not including irrigation).
4			Credit 1	Water Efficient Landscaping	2 to 4	landscape/contractor	To limit or eliminate the use of potable water for landscape irrigation. This point will be achieved by using landscapce materials that do not require permanent irrigation system.
				2 Reduce by 50%	2		
				4 No Potable Water Use or Irrigation	4		
	2		Credit 2	Innovative Wastewater Technologies	2	mechanical	To reduce wastewater generation and potable water demand while increasing the local aquifer recharge. This point can be achieved by reducing potable water use for building sewage conveyance by 50% through the use of water-conserving fixtures.
4			Credit 3	Water Use Reduction	2 to 4	mechanical	To further increase water efficiency within buildings to reduce the burden on municipal water supply and wastewater systems. This can be achieved by using less water than the waster use baseline calculated for the building (not including irrigation).
				2 Reduce by 30%	2		
				3 Reduce by 35%	3		
				4 Reduce by 40%	4		
17	11	7	**Energy and Atmosphere**	Possible Points:	**35**		
Y	N	?					
Y			Prereq 1	Fundamental Commissioning of Building Energy Systems		commissioning authority	To verify that the project's energy-related systems are installed, cllibrated and perform according to the owner's project requirements, basis of design and construction documents.
Y			Prereq 2	Minimum Energy Performance		mechanical, arch & elect	To establish the minimum level of energy efficiency for the proposed building and systems to reduce environmental and economic impacts associated with excessive energy use. This will be achieved by demonstrating a 10% improvement in the proposed building performance rating.
Y			Prereq 3	Fundamental Refrigerant Management		mechanical	To reduce stratospheric ozone depletion. This will be achieved by zero use of CFC based refrigerants.

LEED 2009 for New Construction and Major Renovation

Project Checklist

Project Name: PRTC REDHORSE Cantonments Operations Facility

Date: APRIL 2011

10	9		Credit 1		Optimize Energy Performance	1 to 19	mechanical, arch & elect	To achieve increasing levels of energy performance beyond the prerequisite standard to reduce environmental and economic impacts associated with excessive energy use. At least 30% improvement will be achieved because of Epact 2005 standard/requirements.
				1	Improve by 12% for New Buildings or 8% for Existing Building Renovations	1		
				2	Improve by 14% for New Buildings or 10% for Existing Building Renovations	2		
				3	Improve by 16% for New Buildings or 12% for Existing Building Renovations	3		
				4	Improve by 18% for New Buildings or 14% for Existing Building Renovations	4		
				5	Improve by 20% for New Buildings or 16% for Existing Building Renovations	5		
				6	Improve by 22% for New Buildings or 18% for Existing Building Renovations	6		
				7	Improve by 24% for New Buildings or 20% for Existing Building Renovations	7		
				8	Improve by 26% for New Buildings or 22% for Existing Building Renovations	8		
				9	Improve by 28% for New Buildings or 24% for Existing Building Renovations	9		
				10	Improve by 30% for New Buildings or 26% for Existing Building Renovations	10		
					Improve by 32% for New Buildings or 28% for Existing Building Renovations	11		
					Improve by 34% for New Buildings or 30% for Existing Building Renovations	12		
					Improve by 36% for New Buildings or 32% for Existing Building Renovations	13		
					Improve by 38% for New Buildings or 34% for Existing Building Renovations	14		
					Improve by 40% for New Buildings or 36% for Existing Building Renovations	15		
					Improve by 42% for New Buildings or 38% for Existing Building Renovations	16		
					Improve by 44% for New Buildings or 40% for Existing Building Renovations	17		
					Improve by 46% for New Buildings or 42% for Existing Building Renovations	18		
				9	Improve by 48%+ for New Buildings or 44%+ for Existing Building Renovations	19		
		7	Credit 2		On-Site Renewable Energy	1 to 7	electrical	To encourage and recognize increasing levels of on-site renewable energy self-supply to reduce environmental and economic impacts associated with fossil fuel energy use. BIPV solar panels on roof possible; electrical to explore.
				1	1% Renewable Energy	1		
				2	3% Renewable Energy	2		
				3	5% Renewable Energy	3		
				4	7% Renewable Energy	4		
				5	9% Renewable Energy	5		
				6	11% Renewable Energy	6		
				7	13% Renewable Energy	7		
2			Credit 3		Enhanced Commissioning	2	commissioning authority	To begin commissioning process early in the design process and execute additional activities after systems performance verification is completed.
2			Credit 4		Enhanced Refrigerant Management	2	mechanical	To reduce ozone depletion and support early compliance with the Montreal Protocol while minimizing direct contribution to climate change. This point will be ahieved by selecting HVAC&R that minimize or eliminate the emission of compounds that contribute to ozone depletion and global climate change.
3			Credit 5		Measurement and Verification	3	government & contractor	To provide for the ongoing accountability of building energy consumption over time. This will be achieved by developing and implementing a measurement and verification plan that cover at least 1 year post-construction occupancy.
	2		Credit 6		Green Power	2	government	To encourage the development and use of grid-source, renewable energy technology on a net zero pollution basis. This project does not develop or use green power.
4	8	2	**Materials and Resources**		Possible Points:	**14**		
Y	N	?						
Y			Prereq 1		Storage and Collection of Recyclables		government & contractor	To facilitate the reduction of waste generated by building occupants that is hauled to and disposed of in landfills. This will be achieved by providing an easily accessible dedicated area or for the collection and storage of materials for recycling for the entire building. Material must include at a minimum paper, corrugated cardboard, glass, plastic and metals.

LEED 2009 for New Construction and Major Renovation

Project Checklist

Project Name: PRTC REDHORSE Cantonments Operations Facility

Date: APRIL 2011

	3		Credit 1.1		Building Reuse—Maintain Existing Walls, Floors, and Roof	1 to 3	government & contractor	To extend the life cycle of existing building stock, conserve resources, retain cultural resources, reduce waste and reduce environmental impacts of new buildings as they relate to materials manufacturing and transport. This is not achievable because there is no reusable existing building structure.
				1	Reuse 55%	1		
				1	Reuse 75%	2		
				1	Reuse 95%	3		
	1		Credit 1.2		Building Reuse—Maintain 50% of Interior Non-Structural Elements	1	government & contractor	To extend the life cycle of existing building stock, conserve resources, retain cultural resources, reduce waste and reduce environmental impacts of new buildings as they relate to materials manufacturing and transport. This is not achievable because there is no reusable interior existing building elements.
1	1		Credit 2		Construction Waste Management	1 to 2	contractor	To divert construction and demolition debris from disposal in landfills and incineration facilities. This is achievable by recycling and/or salvaging nonhazardouz construction and demolition debris.
				1	50% Recycled or Salvaged	1		
				1	75% Recycled or Salvaged	2		
	1	1	Credit 3		Materials Reuse	1 to 2	team	To reuse building materials and products to reduce demand for virgin materials and reduce waste, thereby lessening impacts associated with the extraction and processing of virgin resources. This is possible by use of salvaged, refurbished or reused materials, the sum of which constitute a percentage based on cost of the total value of materials on the project.
				1	Reuse 5%	1		
				1	Reuse 10%	2		
1	1		Credit 4		Recycled Content	1 to 2	team	To increase demand for building products that incorporate recycle content materials, thereby reducing impacts resulting from extraction and processing of virgin materials. This can be achieved by using materials with recycled contents.
				1	10% of Content	1		
				1	20% of Content	2		
1		1	Credit 5		Regional Materials	1 to 2	contractor	To increase demand for building materials and products that are extracted and manufactured within the region, thereby supporting the use of indigeneous resources and reducing the environmental impacts resulting from transportation. This is achievable; concrete and asphalt aggregates are regional materials.
				1	10% of Materials	1		
				1	20% of Materials	2		
	1		Credit 6		Rapidly Renewable Materials	1	contractor	To reduce the use and depletion of finite raw materials and long-cycle renewable materials by replacing them with rapidly renewable materials. 2.5% of total value of building materials may not be achievable.
1			Credit 7		Certified Wood	1	contractor	To encourage environmentally responsible forest management. This is achieable by using a minimum of 50% (based on cost) of wood based materials that are cerified wood.
14	0	1	**Indoor Environmental Quality**			Possible Points: **15**		
Y	N	?						

LEED 2009 for New Construction and Major Renovation

Project Checklist

Project Name: PRTC REDHORSE Cantonments Operations Facility

Date: APRIL 2011

Y			Prereq 1	Minimum Indoor Air Quality Performance		mechanical	To establish minimum indoor air quality performance to enhance indoor air quality in buildings, thus contributing to the comfort and well-being of the occupants. This is achieved by meeting Sections 4-7 of ASHRAE 62.1-2007.
Y			Prereq 2	Environmental Tobacco Smoke (ETS) Control		government	To prevent or minimize exposure of building occupants, indoor surfaces and ventilation air distribution systems to environmental tobacco smoke. This is achieved by prohibiting smoking in the building.
1			Credit 1	Outdoor Air Delivery Monitoring	1	mechanical	To provide capacity for ventilation system monitoring to help promote occupant comfort and well-being. This is achieved by installing permanent monitoring systems to ensure that ventilation systems maintain design minimum requirements. CO2 level to be monitored at the air intake.
1			Credit 2	Increased Ventilation	1	mechanical	To provide additional outdoor air ventilation to improve indoor air quality and promote occupant comfort, well-being and productivity. This is achieved by increasing breathing zone outdoor air ventilation rates to all occupied spaces by at least 30% above the minimum rates required by ASHRAE 62.1-2007. However, a heat recovery pipe unit must be added as part of the A/C system.
1			Credit 3.1	Construction IAQ Management Plan—During Construction	1	mechanical & contractor	To reduce indoor air quality problems resulting from construction and promoting the comfort and well-being of construction workers and building occupants. This will be achieved by developing and implementing IAQ management plan.
1			Credit 3.2	Construction IAQ Management Plan—Before Occupancy	1	mechanical & contractor	To reduce indoor air quality problems resulting from construction and promoting the comfort and well-being of construction workers and building occupants. This will be achieved by developing IAQ plan and implement it after all finishes have been installed and the building has been completely cleaned before occupancy.
1			Credit 4.1	Low-Emitting Materials—Adhesives and Sealants	1	contractor	To reduce the quantity of indoor air contaminants that are odorous, irritating and/or harmfull to the comfort and well-being of installers and occupants. This is achieved by ensuring that construction adhesives and sealants meet LEED VOC requirements.
1			Credit 4.2	Low-Emitting Materials—Paints and Coatings	1	contractor	To reduce the quantity of indoor air contaminants that are odorous, irritating and/or harmfull to the comfort and well-being of installers and occupants. This is achieved by ensuring that paints and coatings used on the interior of the building meet LEED VOC requirements.
1			Credit 4.3	Low-Emitting Materials—Flooring Systems	1	contractor	To reduce the quantity of indoor air contaminants that are odorous, irritating and/or harmfull to the comfort and well-being of installers and occupants. This is achieved by ensuring that flooring materials used on the interior of the building meet LEED VOC requirements.
1			Credit 4.4	Low-Emitting Materials—Composite Wood and Agrifiber Products	1	contractor	To reduce the quantity of indoor air contaminants that are odorous, irritating and/or harmfull to the comfort and well-being of installers and occupants. This is achieved by ensuring that composite wood and aquafiber products used on the interior do not contain added urea-formaldehyde resins.
		1	Credit 5	Indoor Chemical and Pollutant Source Control	1	government & AE team	To minimize building occupant exposure to potentially hazardous particulates and chemical pollutants. This can be achieved by installing roll-out matt at entryways and providing sufficient exhaust at spaces where potentially hazardous gases may be present or used. Also, possible use new air filtration media with MERV13 or better.

1			Credit 6.1	Controllability of Systems—Lighting	1	electrical	To provide high level of lighting system control by individual occupants or groups in multi-occupant spaces and promote their productivity. This can be achieved by providing individual lighting control for 90% of occupants to anable adjustments to suit induvidual task needs and preferences.
1			Credit 6.2	Controllability of Systems—Thermal Comfort	1	mechanical	To provide high level of thermal comfort system control by individual occupants or groups in multi-occupant spaces and promote their productivity, comfort and well-being. This can be achieved by providing individual comfort control for 50% of occupants to anable adjustments to suit induvidual needs and preferences.
1			Credit 7.1	Thermal Comfort—Design	1	mechanical & architectural	To provide comfortable thermal environment that promotes occupant prductivity and well-being. This is achieved by designing the HVAC systems and the building envelope to meet the requirements of ASHRAE 55-2005.
1			Credit 7.2	Thermal Comfort—Verification	1	government	To provide for the assesment of building occupants thermal comfort over time. This can be achieved by agreeing to conduct a thremal comfort survey of building occupants within 6 to 18 months after occupancy.
1			Credit 8.1	Daylight and Views—Daylight	1	architectural	To provide for the building occupant with connection between indoor spaces and the outdoors through the introduction of daylight and views into the regularly occupied areas of the building. This may be achieved by demonstrating through computer simulations that 75% of occupied spaces reach a minimum of 25fc and max of 500fc of day-light illuminance. This can be achieved by providing windows/clerestories or/and glassblocks or/and sky-light tubes in the design.
1			Credit 8.2	Daylight and Views—Views	1	architectural	To provide for the building occupant with connection to the outdoors through the introduction of daylight and views into the regularly occupied areas of the building. This can be achieved by providing windows at offices and work areas.
1	4	1	**Innovation and Design Process**		Possible Points:	**6**	
Y	N	?					
		1	Credit 1.1	Innovation in Design: Radon mitigation.	1	team	This is a credit for another extraordinary Green design motif. Not achieved.
	1		Credit 1.2	Innovation in Design: Specific Title	1	team	This is a credit for another extraordinary Green design motif. Not achieved.
	1		Credit 1.3	Innovation in Design: Specific Title	1	team	This is a credit for another extraordinary Green design motif. Not achieved.
	1		Credit 1.4	Innovation in Design: Specific Title	1	team	This is a credit for another extraordinary Green design motif. Not achieved.
	1		Credit 1.5	Innovation in Design: Specific Title	1	team	This is a credit for another extraordinary Green design motif. Not achieved.
1			Credit 2	LEED Accredited Professional	1	LEED AP	This is a credit for utilizing on-line submission processes during the construction process. This requires a LEED person certified; and this point will be acquired.
4	0	0	**Regional Priority Credits**		Possible Points:	**4**	
Y	N	?					
1			Credit 1.1	Regional Priority: Specific Credit	1		Regional credits for meeting SS-6.1, stormwater design - quantity control.

LEED 2009 for New Construction and Major Renovation

Project Checklist

Project Name: PRTC REDHORSE Cantonments Operations Facility

Date: APRIL 2011

1			Credit 1.2	Regional Priority: Specific Credit	1		Regional credits for meeting SS-6.2, stormwater design - quality control.
1			Credit 1.3	Regional Priority: Specific Credit	1		Regional credits for meeting the WE-1 by selecting landscape design which do not require permanent irrigation system. No potable water required for landscaping.
1			Credit 1.4	Regional Priority: Specific Credit	1		Regional credits for exceeeding the EA-1 28% minimum threshold; this project improve the building performance by 30%.
57	39	14	**Total**	Possible Points:	**110**		
Certified 40 to 49 points	Silver 50 to 59 points	Gold 60 to 79 points	Platinum 80 to 110				

Project required Silver Certification (50 points minimum).

Air Force MILCON Sustainability Requirements Scoresheet

version LEED® 2009

General Information

N4019209D2707-0014	**Project ID (e.g. ABCD12345)**
Combat Comm's Transmission Facility	**Building Name**
	Project Type
Andersen AFB	**Installation**
Agana	**City**
Guam	**State**
	MAJCOM
Arlene Aromin	**PM Name**
$5,700,000.00	**PA ($k)**
10,305	**Building Size (SF)**
2011	**Program Year (FY####)**
Design Charette	**Project Phase**
2010	**Design Started (FY####)**
5/31/2013	**BOD (MM/DD/YY)**
Yes	**Pursuing formal LEED® Certification**
	Date Project Registered with USGBC (MM/DD/YY)
LEED® 2009	**LEED® Rating System**
54	**LEED® Credits Achievable**
Silver	**LEED® Certification Level Achievable (per AF SDD Policy (July 2007))**
	LEED® Credits Awarded by GBCI (e.g. 42)
	LEED® Certification Level Awarded by GBCI
	Date Project Certified by GBCI (MM/DD/YY)
	Registration Fees ($)
	Certification Fees ($)
79%	**HPSB Compliant**
30%	**Water Conservation Achieved (% below EPAct 1992)**
30%	**Energy Efficiency Achieved (% below ANSI/ASHRAE/IESNA Standard 90.1-2007)**
	Comments

Federal Requirements for High Performance Sustainable Buildings (HPSB)

HPSB I: Employ Integrated Design Principles

Achievable Points 2 — Possible Points 2

Yes	HPSB I.1	**Integrated Design**	1
Yes	HPSB I.2	**Commissioning**	1

HPSB II: Optimize Energy Performance

Achievable Points 4 — Possible Points 5

Yes	HPSB II.1		**Energy Efficiency, Achieve Option 1 or 2 and insert design percentage**	1
		1	Yes	Reduce energy use 30% Below ANSI/ASHRAE/IESNA Standard 90.1- 2007, OR
		2	Yes	If not at least 30% below ANSI/ASHRAE/IESNA Standard 90.1-2007, will the design achieve the maximum level of energy efficiency that is life-cycle cost-effective?
			30.0%	Insert percentage below ANSI/ASHRAE/IESNA Standard 90.1-2007 in terms of energy use (e.g. 32)
				Insert building energy intensity (Btu/SF) calculated with the energy model per 10 CFR 433
			Cool	Roof Attributes (Recommended)
			Cool	Cool roof (LEED SS cr 7.2 or Energy Star)
				Green roof
				Solar electric, thermal or passive
			Maybe	Achieve "Designed to Earn the Energy Star" rating - Benchmark from first year of operation (Recommended)
Yes	HPSB II.2		**Preferential use of ENERGY STAR or FEMP-designated equipment, when lifecycle cost effective**	1
	HPSB II.3		**On-site Renewable Energy - Solar Hot Water Heater System**	1
			No	Lifecycle cost assessment found solar hot water heater system not effective
			No	When lifecycle cost effective, solar hot water system installed - min 30% demand

Air Force MILCON Sustainability Requirements Scoresheet

version LEED® 2009

		0.0%	Insert percentage achieved	
Yes	HPSB II.4	**On-site Renewable Energy**		1
		No	Lifecycle cost assessment found renewable energy generation projects not effective	
		Yes	When lifecycle cost effective, renewable energy generation projects installed	
		Solar PV	Renewable energy type	
		Solar PV	Insert first renewable energy type, if applicable	
			Insert second renewable energy type, if applicable	
			Insert generation capacity (kW)	
		5.0%	Insert percentage of total building	
Yes	HPSB II.5	**Measurement and Verification - Advanced Metering**		1
		N/A	Water Metering: Select N/A if not used	
		Yes	Electric Metering: Select N/A if not used	
		N/A	Natural Gas Metering: Select N/A if not used	
		N/A	Steam Metering: Select N/A if not used	
No	HPSB II.6	**Project Case Study Entered in High Performance Federal Buildings Database (Recommended)**		
Yes	EISA 2007 II.7	**Reduction in fossil fuel-generated energy consumption (Recommended)**		
No	EISA 2007 II.8	**Data Center Energy Consumption (Recommended)**		
HPSB III: Protect and Conserve Water				
Achievable Points	6		Possible Points	7
Yes	HPSB III.1	**Indoor Water - 20% Reduction**		1
		30.0%	Insert percentage achieved	
Yes	HPSB III.2	**Outdoor Water - Reduce Potable Water Use by 50%**		1
Yes	HPSB III.3	**Outdoor Water - Stormwater runoff**		1
Yes	HPSB III.4	**Outdoor Water - Achieve Pre-Development Hydrology when technically feasible, when disturbance > 5,000 GSF**		1
	HPSB III.5	**Process water potable water use**		1
		No	Energy efficiency measures using water were considered and the cost was included in lifecycle cost assessment	
		No	Energy efficiency measures using water were not considered for the design	
Yes	HPSB III.6	**Water-Efficient Products**		1
Yes	HPSB III.7	**Water Efficient Products - Irrigation Contractors**		1
HPSB IV: Enhance Indoor Environmental Quality				
Achievable Points	7		Possible Points	9
Yes	HPSB IV.1	**Thermal Comfort, ASHRAE 55-2004**		1
Yes	HPSB IV.2	**Ventilation: ASHRAE 62.1-2007**		1
Yes	HPSB IV.3	**Moisture Control**		1
No	HPSB IV.4	**Daylighting - 75% of Spaces**		1
No	HPSB IV.5	**Daylighting - Controllability of Systems**		1
Yes	HPSB IV.6	**Low Emitting Materials**		1
Yes	HPSB IV.7	**Protect Indoor Air Quality during Construction**		1
Yes	HPSB IV.8	**Protect Indoor Air Quality after Construction**		1
Yes	HPSB IV.9	**Environmental Tobacco Smoke (ETS) Control**		1
HPSB V: Reduce Environmental Impact of Materials				
Achievable Points	4		Possible Points	6
No	HPSB V.1	**Recycled Content**		1
No	HPSB V.2	**Biobased Content**		1
Yes	HPSB V.3	**Environmentally Preferable Products**		1
Yes	HPSB V.4	**Waste and Materials Management - Recycling**		1
Yes	HPSB V.5	**Waste and Materials Management - Divert 50% from Disposal**		1
Yes	HPSB V.6	**Ozone Depleting Compounds**		1
HPSB Totals			Possible Points	**29**
23	**Federal Requirements Achieved (29 line items)**			
0	**Federal Requirements Maybe Achieved**			
4	**Federal Requirements Not Achieved**			
79%	**Percentage of Federal Requirements Achieved**			

LEED® 2009 Checklist

LEED® Credits and/or Prerequisites that meet HPSB Requirements

Air Force MILCON Sustainability Requirements Scoresheet

version LEED® 2009

LEED® Credits and/or Prerequisites that align closely with HPSB Requirements

Sustainable Sites				
Achievable Points	9	**Sustainable Sites**	Possible Points	26
Yes	Prereq 1	**Construction Activity Pollution Prevention (HPSB GP3)**		Required
Yes	Credit 1	**Site Selection**		1
No	Credit 2	**Development Density & Community Connectivity**		5
No	Credit 3	**Brownfield Redevelopment**		1
No	Credit 4.1	**Alternative Transportation -** Public Transportation Access		6
Yes	Credit 4.2	**Alternative Transportation -** Bicycle Storage & Changing Rooms		1
Maybe	Credit 4.3	**Alternative Transportation -** Low-Emitting & Fuel Efficient Vehicles		3
Yes	Credit 4.4	**Alternative Transportation -** Parking Capacity		2
No	Credit 5.1	**Site Development,** Protect or Restore Habitat		1
No	Credit 5.2	**Site Development,** Maximize Open Space		1
Yes	Credit 6.1	**Stormwater Design, Quantity Control (HPSB GP3)**		1
Yes	Credit 6.2	**Stormwater Design, Quality Control (HPSB GP3)**		1
Yes	Credit 7.1	**Heat Island Effect -** Non-Roof		1
Yes	Credit 7.2	**Heat Island Effect -** Roof		1
Yes	Credit 8	**Light Pollution Reduction**		1
Water Efficiency				
Achievable Points	6		Possible Points	10
Yes	Prereq 1	**Water Use Reduction - 20% Reduction (HPSB GP3)**		Required
Yes	Credit 1.1	**Water Efficient Landscaping - Reduce Potable Water Use by 50% (HPSB GP3)**		2
Yes	Credit 1.2	**Water Efficient Landscaping - No Potable Use or No Irrigation**		2
No	Credit 2	**Innovative Wastewater Technologies**		2
2	Credit 3	**Water Use Reduction**		2 to 4
		2	30% Reduction	2
		3	35% Reduction	1
		4	40% Reduction	1
Energy & Atmosphere				
Achievable Points	20		Possible Points	35
Yes	Prereq 1	**Fundamental Commissioning of the Building Energy Systems (HPSB GP1)**		Required
Yes	Prereq 2	**Minimum Energy Performance (HPSB GP2)**		Required
Yes	Prereq 3	**Fundamental Refrigerant Management (HPSB GP5)**		Required
10	Credit 1	**Optimize Energy Performance (HPSB GP)**		1 to 19
		1	12% for New Buildings/8% for Existing Building Renovations	1
		2	14% for New Buildings/10% for Existing Building Renovations	1
		3	16% for New Buildings/12% for Existing Building Renovations	1
		4	18% for New Buildings/14% for Existing Building Renovations	1
		5	20% for New Buildings/16% for Existing Building Renovations	1
		6	22% for New Buildings/18% for Existing Building Renovations	1
		7	24% for New Buildings/20% for Existing Building Renovations	1
		8	26% for New Buildings/22% for Existing Building Renovations	1
		9	28% for New Buildings/24% for Existing Building Renovations	1
		10	30% for New Buildings/26% for Existing Building Renovations	1
		11	32% for New Buildings/28% for Existing Building Renovations	1
		12	34% for New Buildings/30% for Existing Building Renovations	1
		13	36% for New Buildings/32% for Existing Building Renovations	1
		14	38% for New Buildings/34% for Existing Building Renovations	1
		15	40% for New Buildings/36% for Existing Building Renovations	1
		16	42% for New Buildings/38% for Existing Building Renovations	1
		17	44% for New Buildings/40% for Existing Building Renovations	1
		18	46% for New Buildings/42% for Existing Building Renovations	1
		19	48%+ for New Buildings/44%+ for Existing Building Renovations	1
3	Credit 2	**On-Site Renewable Energy (HPSB GP2)**		1 to 7
		1	On-site 1%	1
		2	On-site 3%	1
		3	On-site 5%	1
		4	On-site 7%	1
		5	On-site 9%	1
		6	On-site 11%	1
		7	On-site 13%	1
Yes	Credit 3	**Enhanced Commissioning (HPSB GP1)**		2
Yes	Credit 4	**Enhanced Refrigerant Management (HPSB GP5)**		2

Air Force MILCON Sustainability Requirements Scoresheet

version LEED® 2009

Yes	Credit 5	Measurement & Verification (HPSB GP2)		3
No	Credit 6	**Green Power**		2
Materials & Resources				
Achievable Points	3		Possible Points	14
Yes	Prereq 1	Storage & Collection of Recyclables (HPSB GP5)		Required
0	Credit 1.1	**Building Reuse,** Maintain Existing Walls, Floors & Roof		1 to 3
		1	Maintain 55% of Existing Walls, Floors & Roof	1
		2	Maintain 75% of Existing Walls, Floors & Roof	1
		3	Maintain 95% of Existing Walls, Floors & Roof	1
No	Credit 1.2	**Building Reuse,** Maintain 50% of Interior Non-Structural Elements		1
Yes	Credit 2.1	Construction Waste Management		1
Maybe	Credit 2.2	**Construction Waste Management,** Divert 75% from Disposal		1
0	Credit 3	**Materials Reuse**		1 to 2
		1	5%	1
		2	10%	1
No	Credit 4.1	Recycled Content, 10% (post-consumer +1/2 pre-consumer) (HPSB GP5)		1
No	Credit 4.2	Recycled Content, 20% (post-consumer +1/2 pre-consumer)		1
1	Credit 5	**Regional Materials**		1 to 2
		1	10% Extracted, Processed & Manufactured	1
		2	20% Extracted, Processed & Manufactured	1
No	Credit 6	Rapidly Renewable Materials (HPSB GP5)		1
Yes	Credit 7	Certified Wood (HPSB GP5)		1
Indoor Environmental Quality				
Achievable Points	10		Possible Points	15
Yes	Prereq 1	Minimum IAQ Performance (HPSB GP4)		Required
Yes	Prereq 2	Environmental Tobacco Smoke (ETS) Control (HPSB GP4)		Required
Yes	Credit 1	**Outside Air Delivery Monitoring**		1
Maybe	Credit 2	**Increased Ventilation**		1
Yes	Credit 3.1	Construction IAQ Management Plan, During Construction (HPSB GP4)		1
Yes	Credit 3.2	Construction IAQ Management Plan, Before Occupancy (HPSB GP4)		1
Yes	Credit 4.1	Low Emitting Materials, Adhesives & Sealants (HPSB GP4)		1
Yes	Credit 4.2	Low Emitting Materials, Paints & Coatings (HPSB GP4)		1
Yes	Credit 4.3	Low Emitting Materials, Flooring Systems (HPSB GP4)		1
Yes	Credit 4.4	Low Emitting Materials, Composite Wood & Agrifiber Products (HPSB GP4)		1
Maybe	Credit 5	**Indoor Chemical & Pollutant Source Control**		1
Yes	Credit 6.1	Controllability of Systems, Lighting (HPSB GP4)		1
No	Credit 6.2	**Controllability of Systems,** Thermal Comfort		1
Yes	Credit 7.1	Thermal Comfort, Design (HPSB GP4)		1
Yes	Credit 7.2	**Thermal Comfort,** Verification		1
No	Credit 8.1	Daylight & Views - Daylight 75% of Spaces (HPSB GP4)		1
No	Credit 8.2	**Daylight & Views** - Views for 90% of Spaces		1
Innovation & Design Process				
Achievable Points	2		Possible Points	6
Yes	Credit 1.1	**Innovation in Design**		1
No	Credit 1.2	**Innovation in Design**		1
No	Credit 1.3	**Innovation in Design**		1
No	Credit 1.4	**Innovation in Design**		1
No	Credit 1.5	**Innovation in Design**		1
Yes	Credit 2	**LEED® Accredited Professional**		1
Regional Priority Credits				
Achievable Points	4		Possible Points	4
Yes	Credit 1.1	**Regional Priority**		1
Yes	Credit 1.2	**Regional Priority**		1
Yes	Credit 1.3	**Regional Priority**		1
Yes	Credit 1.4	**Regional Priority**		1
LEED Project Totals	**(pre-certification estimates)**		Possible Points	110
54	LEED® Credits Achievable			
4	LEED® Credits Maybe Achievable			
18	LEED® Credits Not Achievable			
Silver	**LEED® Certification Level Achievable**			
N/A	**LEED® Horizontal Benchmark Level**			

Air Force MILCON Sustainability Requirements Scoresheet
version LEED® 2009

N/A	**LEED® Utility Benchmark Level**
N/A	**LEED® Industrial Benchmark Level**

Certified: 40-49 points, **Silver:** 50-59 points, **Gold:** 60-79 points, **Platinum:** 80-110

High Performance Sustainable Building Requirements and LEED® 2009 References		Links
	The High Performance Sustainable Building Requirements (Dec 08) described below are also found on the FedCenter website:	High Performance Sustainable Building Guidance (Dec 08)
	For more information on LEED® Credits that meet or align closely with federal requirements as well as other credits a building can pursue towards the Silver certification level, review the LEED® New Construction and Major Renovations 2009 Rating System:	LEED(R) for New Construction & Major Renovations 2009 - Nov 2008
Color Code	**LEED® Credits and/or Prerequisites that align closely with Federal High Performance Sustainable Buildings (HPSB) Requirements** These credits and/or prerequisites align closely with the associated HPSB Guiding Principle. They could be either more or less stringent or have different measurement metrics. In the case where one is more stringent than the other, achieving the more stringent one does not imply the less stringent is achieved. **LEED® Credits and/or Prerequisites that meet Federal High Performance Sustainable Buildings (HPSB) Requirements** These credits and/or prerequisites have the same requirements as the associated HPSB Guiding Principle. This does not guarantee achieving the LEED Credit, as some documentation methods may vary. **Recommended (Federal Requirement not fully defined at this time)**	Air Force Sustainable Design and Development Policy Memorandum (July 2007)
	HPSB I: Employ Integrated Design Principles	
HPSB I.1: Integrated Design	Use a collaborative, integrated planning and design process that • Initiates and maintains an integrated project team as described on the Whole Building Design Guide in all stages of a project's planning and delivery, http://www.wbdg.org/design/engage_process.php • Integrates the use of OMB's A-11, Section 7, Exhibit 300: Capital Asset Plan and Business Case Summary • Establishes performance goals for siting, energy, water, materials, and indoor environmental quality along with other comprehensive design goals and ensures incorporation of these goals throughout the design and lifecycle of the building • Considers all stages of the building's lifecycle, including deconstruction.	HPSB Guidance
Requirement Source Document(s)	Federal Leadership in High Performance and Sustainable Buildings MOU	
LEED Credit(s) aligns closely with HPSB:	None	
LEED Credit(s) meet HPSB:	None	
HPSB I.2: Commissioning	Employ commissioning practices tailored to the size and complexity of the building and its system components in order to verify performance of building components and systems and help ensure that design requirements are met. This should include an experienced commissioning provider, inclusion of commissioning requirements in construction documents, a commissioning plan, verification of the installation and performance of systems to be commissioned, and a commissioning report.	HPSB Guidance
Requirement Source Document(s)	Federal Leadership in High Performance and Sustainable Buildings MOU	
LEED Credit(s) aligns closely with HPSB:	LEED EA Prerequisite 1: Fundamental Commissioning of Building Energy Systems LEED EA Credit 3: Enhanced Commissioning	LEED(R) for New Construction & Major Renovations 2009 - Nov 2008
LEED Credit(s) meet HPSB:	None	

High Performance Sustainable Building Requirements and LEED® 2009 References		Links
	HPSB II: Optimize Energy Performance	
HPSB II.1: Energy Efficiency.	For new construction, reduce the energy use by 30 percent compared to the baseline building performance rating per the American National Standards Institute (ANSI)/American Society of Heating, Refrigerating and Air-Conditioning Engineers, Inc., (ASHRAE)/Illuminating Engineering Society of North America (IESNA) Standard 90.1-2007, Energy Standard for Buildings Except Low-Rise Residential, except for the performance rating formula in G1.2, which should be used as follows (from 10 CFR 433.5): Percentage improvement = 100 x (Baseline building consumption—Proposed building consumption) ÷(Baseline building consumption—Receptacle and process loads). This differs from the LEED calculation. For major renovations, reduce the energy use by 20 percent below pre-renovations 2003 baseline. Laboratory spaces may use the Labs21 Laboratory Modeling Guidelines. ENERGY STAR qualified low-slope roofs (2:12 inches or less) have an intial solar reflectance greater than or equal to 0.65 and is greater than or equal to 0.50 three years after installation. Steep slope roofs (greater than 2:12 inches) have an intial solar reflectance greater than or equal to 0.25 and is greater than or equal to 0.15 three years after installation	HPSB Guidance
Requirement Source Document(s)	10 CFR 433.5, Federal Leadership in High Performance and Sustainable Buildings MOU	GPO Access: 10 CFR 433.5
LEED Credit(s) aligns closely with HPSB:	LEED EA Prerequisite 2: Minimum Energy Performance LEED EA Credit 1: Optimize Energy Performance	LEED(R) for New Construction & Major Renovations 2009 - Nov 2008
LEED Credit(s) meet HPSB:	None	
HPSB II.2: Preferential use of ENERGY STAR or FEMP-designated equipment, when lifecycle cost effective	Use ENERGY STAR® and FEMP-designated Energy Efficient Products, where available.	HPSB Guidance
Requirement Source Document(s):	Federal Leadership in High Performance and Sustainable Buildings MOU	
LEED Credit(s) aligns closely with HPSB:	None	
LEED Credit(s) meet HPSB:	None	
HPSB II.3: On-site Renewable Energy - Solar Hot Water Heater System	Per the Energy Independence and Security Act (EISA) Section 523, meet at least 30% of the hot water demand through the installation of solar hot water heaters, when lifecycle cost effective.	HPSB Guidance
Requirement Source Document(s):	EISA Sec. 523, Federal Leadership in High Performance and Sustainable Buildings MOU	Energy Independence and Security Act of 2007
LEED Credit(s) aligns closely with HPSB:	LEED EA Credit 2: On-Site Renewable Energy	LEED(R) for New Construction & Major Renovations 2009 - Nov 2008
LEED Credit(s) meet HPSB:	None	
HPSB II.4: On-site Renewable Energy	Per Executive Order 13423, implement renewable energy generation projects on agency property for agency use, when lifecycle cost effective. Renewable energy types include: Geothermal, GSHP, Solar PV, Solar CP, Solar Thermal, Wind, Hydro, Daylighting, Waste to Energy.	HPSB Guidance
Requirement Source Document(s):	Federal Leadership in High Performance and Sustainable Buildings MOU	
LEED Credit(s) aligns closely with HPSB:	LEED EA Credit 2: On-Site Renewable Energy	LEED(R) for New Construction & Major Renovations 2009 - Nov 2008
LEED Credit(s) meet HPSB:	None	
HPSB II.5: Measurement and Verification - Advanced Metering	Per the Energy Policy Act of 2005 (EPAct) Section 103, install building level electricity meters in new major construction and renovation projects to track and continuously optimize performance. Per EISA Section 434, include equivalent meters for natural gas and steam, where natural gas and steam are used. Per A7C Memorandum, *DoD Facilities Metering Installation Initiative* (27 April 2006), all new construction should install potable water meters.	HPSB Guidance
Requirement Source Document(s):	EPAct 2005 Section 103, EISA 2007 Section 434, Federal Leadership in High Performance and Sustainable Buildings MOU	Energy Policy Act of 2005
LEED Credit(s) aligns closely with HPSB:	LEED EA Credit 5: Measurement and Verification	LEED(R) for New Construction & Major Renovations 2009 - Nov 2008
LEED Credit(s) meet HPSB:	None	

High Performance Sustainable Building Requirements and LEED® 2009 References		Links
HPSB II.6: Project Case Study Entered in High Performance Federal Buildings Database	As a recommendation, enter data and lessons learned from sustainable buildings into the High Performance Buildings Database.	HPSB MOU
Requirement Source Document(s):	Federal Leadership in High Performance and Sustainable Buildings MOU	http://femp.buildinggreen.com/
LEED Credit(s) aligns closely with HPSB:	None	
LEED Credit(s) meet HPSB:	None	
EISA 2007 II.7: Reduction in fossil fuel-generated energy consumption	For new Federal buildings and Federal buildings undergoing major renovations…(I) The buildings shall be designed so that the fossil fuel generated energy consumption of the buildings is reduced, as compared with such energy consumption by a similar building in fiscal year 2003 (CBECS or RECS data from EIA), by the percentage specified...FY2010 (55%), 2015 (65%), 2020 (80%), 2025 (90%), and 2030 (100%). *The DOE Rulemaking is not yet complete*	Energy Independence and Security Act of 2007
Requirement Source Document(s):	EISA 2007, Sec. 433, (a)(D)(i)	
LEED Credit(s) aligns closely with HPSB:	None	
LEED Credit(s) meet HPSB:	None	
EISA 2007 II.8: Data Center Energy Consumption	EISA 2007 Section 453 directs DOE and EPA to initiate a voluntary national information program for widely used data centers and data center equipment for which there is significant potential for energy savings. *The DOE/EPA guidance is not yet issued.*	Energy Independence and Security Act of 2007
Requirement Source Document(s):	EISA 2007, Sec. 453	
LEED Credit(s) aligns closely with HPSB:	None	
LEED Credit(s) meet HPSB:	None	
	HPSB III: Protect and Conserve Water	
HPSB III.1: Indoor Water - 20% Reduction	Employ strategies that in aggregate use a minimum of 20 percent less potable water than the indoor water use baseline calculated for the building, after meeting the EPAct 1992, Uniform Plumbing Codes 2006, and the International Plumbing Codes 2006 fixture performance requirements. The installation of water meters is encouraged to allow for the management of water use during occupancy. The use of harvested rainwater, treated wastewater, and air conditioner condensate should also be considered and used where feasible for nonpotable use and potable use where allowed.	HPSB Guidance
Requirement Source Document(s):	EPAct 1992, Federal Leadership in High Performance and Sustainable Buildings MOU	THOMAS EPAct 1992
LEED Credit(s) aligns closely with HPSB:	LEED WE Credit 3: Water Use Reduction - Reduce by 30% (3.1), 35% (3.2), 40% (3.3)	
LEED Credit(s) meet HPSB:	LEED WE Prerequisite 1: Water Use Reduction - 20% Reduction	LEED(R) for New Construction & Major Renovations 2009 - Nov 2008
HPSB III.2: Outdoor Water - Reduce Potable Water Use by 50%	Use water efficient landscape and irrigation strategies, such as water reuse, recycling, and the use of harvested rainwater, to reduce outdoor potable water consumption by a minimum of 50 percent over that consumed by conventional means (plant species and plant densities). The installation of water meters for locations with significant outdoor water use is encouraged.	HPSB Guidance
Requirement Source Document(s):	Federal Leadership in High Performance and Sustainable Buildings MOU	
LEED Credit(s) aligns closely with HPSB:	LEED WE Credit 1.2: Water Efficient Landscaping - No Potable Water Use or Irrigation	
LEED Credit(s) meet HPSB:	LEED WE Credit 1.1: Water Efficient Landscaping - Reduce by 50%	LEED(R) for New Construction & Major Renovations 2009 - Nov 2008
HPSB III.3: Outdoor Water - Stormwater runoff	Employ design and construction strategies that reduce storm water runoff and discharges of polluted water offsite.	HPSB Guidance
Requirement Source Document(s):	AF ETL 03-1, Federal Leadership in High Performance and Sustainable Buildings MOU	Engineering Technical Letter (ETL) 03-1 - Stormwater Construction Standards
LEED Credit(s) aligns closely with HPSB:	None	
LEED Credit(s) meet HPSB:	LEED SS Prerequisite 1: Construction Activity Pollution Prevention	LEED(R) for New Construction & Major Renovations 2009 - Nov 2008

High Performance Sustainable Building Requirements and LEED® 2009 References		Links
HPSB III.4: Outdoor Water - Achieve Pre-Development Hydrology when technically feasible, when disturbance > 5,000 GSF	Per EISA Section 438, to the maximum extent technically feasible, maintain or restore the predevelopment hydrology of the site with regard to temperature, rate, volume, and duration of flow using site planning, design, construction, and maintenance strategies.	HPSB Guidance
Requirement Source Document(s):	OUSD Memo 19 Jan 2010, EISA 2007 Sec 438, Federal Leadership in High Performance and Sustainable Buildings MOU	OUSD Memo EISA Section 438
LEED Credit(s) aligns closely with HPSB:	LEED SS Credit 6.1: Stormwater Design - Quantity Control LEED SS Credit 6.2: Stormwater Design - Quality Control	LEED(R) for New Construction & Major Renovations 2009 - Nov 2008
LEED Credit(s) meet HPSB:		
HPSB III.5: Process water - potable water use	Per the Energy Policy Act of 2005 Section 109, when potable water is used to improve a building's energy efficiency, deploy lifecycle cost effective water conservation measures.	HPSB Guidance
Requirement Source Document(s):	EPAct 2005, Sec. 109, Federal Leadership in High Performance and Sustainable Buildings MOU	Energy Policy Act of 2005
LEED Credit(s) aligns closely with HPSB:	None	
LEED Credit(s) meet HPSB:	None	
HPSB III.6: Water-Efficient Products	Specify EPA's WaterSense-labeled products or other water conserving products, where available.	HPSB Guidance
Requirement Source Document(s):	Federal Leadership in High Performance and Sustainable Buildings MOU	
LEED Credit(s) aligns closely with HPSB:	None	
LEED Credit(s) meet HPSB:	None	
HPSB III.7: Water Efficient Products - Irrigation Contractors	Choose irrigation contractors who are certified through a WaterSense labeled program.	HPSB Guidance
Requirement Source Document(s):	Federal Leadership in High Performance and Sustainable Buildings MOU	
LEED Credit(s) aligns closely with HPSB:	None	
LEED Credit(s) meet HPSB:	None	
	HPSB IV: Enhance Indoor Environmental Quality	
HPSB IV.1: Thermal Comfort, ASHRAE 55-2004	Meet ASHRAE Standard 55-2004, Thermal Environmental Conditions for Human Occupancy, including continuous humidity control within established ranges per climate zone.	HPSB Guidance
Requirement Source Document(s):	Federal Leadership in High Performance and Sustainable Buildings MOU	
LEED Credit(s) aligns closely with HPSB:	None	
LEED Credit(s) meet HPSB:	LEED EQ Credit 7: Thermal Comfort - Design	LEED(R) for New Construction & Major Renovations 2009 - Nov 2008
HPSB IV.2: Ventilation: ASHRAE 62.1-2007	Meet ASHRAE Standard 62.1-2007, Ventilation for Acceptable Indoor Air Quality.	HPSB Guidance
Requirement Source Document(s):	Federal Leadership in High Performance and Sustainable Buildings MOU	
LEED Credit(s) aligns closely with HPSB:	None	
LEED Credit(s) meet HPSB:	LEED EQ Prerequisite 1: Minimum Indoor Air Quality Performance	LEED(R) for New Construction & Major Renovations 2009 - Nov 2008
HPSB IV.3: Moisture Control	Establish and implement a moisture control strategy for controlling moisture flows and condensation to prevent building damage, minimize mold contamination, and reduce health risks related to moisture.	HPSB Guidance
Requirement Source Document(s):	ETL 04-3: Design Criteria for Prevention of Mold in Air Force Facilities (Achieves HPSB GP4, Moisture Control), Federal Leadership in High Performance and Sustainable Buildings MOU	AF ETL 04-3
LEED Credit(s) aligns closely with HPSB:	None	
LEED Credit(s) meet HPSB:	None	
HPSB IV.4: Daylighting - 75% of Spaces	Achieve a minimum daylight factor of 2 percent (excluding all direct sunlight penetration) in 75 percent of all space occupied for critical visual tasks.	HPSB Guidance
Requirement Source Document(s):	Federal Leadership in High Performance and Sustainable Buildings MOU	
LEED Credit(s) aligns closely with HPSB:	LEED EQ Credit 8.1: Daylight and Views - Daylight	LEED(R) for New Construction & Major Renovations 2009 - Nov 2008
LEED Credit(s) meet HPSB:	None	

High Performance Sustainable Building Requirements and LEED® 2009 References		Links
HPSB IV.5: Daylighting - Controllability of Systems	Provide automatic dimming controls or accessible manual lighting controls, and appropriate glare control.	HPSB Guidance
Requirement Source Document(s):	Federal Leadership in High Performance and Sustainable Buildings MOU	
LEED Credit(s) aligns closely with HPSB:	LEED EQ Credit 6.1: Controllability of Systems - Lighting	LEED(R) for New Construction & Major Renovations 2009 - Nov 2008
LEED Credit(s) meet HPSB:	None	
HPSB IV.6: Low Emitting Materials	Specify materials and products with low pollutant emissions, including composite wood products, adhesives, sealants, interior paints and finishes, carpet systems, and furnishings.	HPSB Guidance
Requirement Source Document(s):	Federal Leadership in High Performance and Sustainable Buildings MOU	
LEED Credit(s) aligns closely with HPSB:	LEED EQ Credits 4.1-4.4: Low-Emitting Materials - Adhesives and Sealants (4.1), Paints and Coatings (4.2), Flooring Systems (4.3), and Composite Wood and Agrifiber Products (4.4)	LEED(R) for New Construction & Major Renovations 2009 - Nov 2008
LEED Credit(s) meet HPSB:	None	
HPSB IV.7: Protect Indoor Air Quality during Construction	Follow the recommended approach of the Sheet Metal and Air Conditioning Contractor's National Association Indoor Air Quality Guidelines for Occupied Buildings under Construction, 2007.	HPSB Guidance
Requirement Source Document(s):	Federal Leadership in High Performance and Sustainable Buildings MOU	
LEED Credit(s) aligns closely with HPSB:	LEED EQ Credit 3.1: Construction Indoor Air Quality Management Plan - During Occupancy	LEED(R) for New Construction & Major Renovations 2009 - Nov 2008
LEED Credit(s) meet HPSB:	None	
HPSB IV.8: Protect Indoor Air Quality after Construction	After construction and prior to occupancy, conduct a minimum 72-hour flush-out with maximum outdoor air consistent with achieving relative humidity no greater than 60 percent. After occupancy, continue flush-out as necessary to minimize exposure to contaminants from new building materials.	HPSB Guidance
Requirement Source Document(s):	Federal Leadership in High Performance and Sustainable Buildings MOU	
LEED Credit(s) aligns closely with HPSB:	LEED EQ Credit 3.2: Construction Indoor Air Quality Management Plan - Before Occupancy	LEED(R) for New Construction & Major Renovations 2009 - Nov 2008
LEED Credit(s) meet HPSB:	None	
HPSB IV.9: Environmental Tobacco Smoke (ETS) Control	Implement a policy and post signage indicating that smoking is prohibited within the building and within 25 feet of all building entrances, operable windows, and building ventilation intakes during building occupancy.	HPSB Guidance
Requirement Source Document(s):	GSA Federal Register: December 22, 2008 (Volume 73, Number 246), Federal Leadership in High Performance and Sustainable Buildings MOU	Federal Register - Protecting Federal Employees from Environmental Tobacco Smoke
LEED Credit(s) aligns closely with HPSB:	None	
LEED Credit(s) meet HPSB:	LEED EQ Prerequisite 2: Environmental Tobacco Smoke (ETS) Control	LEED(R) for New Construction & Major Renovations 2009 - Nov 2008
	HPSB V: Reduce Environmental Impact of Materials	
HPSB V.1: Recycled Content	Per Section 6002 of the Resource Conservation and Recovery Act (RCRA), for EPA-designated products, specify products meeting or exceeding EPA's recycled content recommendations. For other products, specify materials with recycled content when practicable. If EPA-designated products meet performance requirements and are available at a reasonable cost, a preference for purchasing them shall be included in all solicitations relevant to construction, operation, maintenance of or use in the building.	EPA's Comprehensive Procurement Guideline Website
Requirement Source Document(s):	RCRA 2002, Sec 6002, Federal Leadership in High Performance and Sustainable Buildings MOU	RCRA 2002
LEED Credit(s) aligns closely with HPSB:	LEED MR Credit 4.1-4.2: Recycled Content - 10% of Content (4.1), 20% of Content (4.2)	LEED(R) for New Construction & Major Renovations 2009 - Nov 2008
LEED Credit(s) meet HPSB:	None	

High Performance Sustainable Building Requirements and LEED® 2009 References		Links
HPSB V.2: Biobased Content	Per Section 9002 of the Farm Security and Rural Investment Act (FSRIA), for USDA-designated products, specify products with the highest content level per USDA's biobased content recommendations. For other products, specify biobased products made from rapidly renewable resources and certified sustainable wood products. If these designated products meet performance requirements and are available at a reasonable cost, a preference for purchasing them shall be included in all solicitations relevant to construction, operation, maintenance of or use in the building.	USDA's Biopreferred Website
Requirement Source Document(s):	FSRIA 2002 Section 9002, Federal Leadership in High Performance and Sustainable Buildings MOU	FSRIA 2002
LEED Credit(s) aligns closely with HPSB:	LEED MR Credit 6: Rapidly Renewable Materials LEED MR Credit 7: Certified Wood	LEED(R) for New Construction & Major Renovations 2009 - Nov 2008
LEED Credit(s) meet HPSB:	None	
HPSB V.3: Environmentally Preferable Products	Use products that have a lesser or reduced effect on human health and the environment over their lifecycle when compared with competing products or services that serve the same purpose. A number of standards and ecolabels are available in the marketplace to assist specifiers in making environmentally preferable decisions.	WBDG Federal Green Construction Guide
Requirement Source Document(s):	Federal Leadership in High Performance and Sustainable Buildings MOU	
LEED Credit(s) aligns closely with HPSB:	None	
LEED Credit(s) meet HPSB:	None	
HPSB V.4: Waste and Materials Management - Recycling	Incorporate adequate space, equipment, and transport accommodations for recycling in the building design.	HPSB Guidance
Requirement Source Document(s):	EO 13423, Sec 2(e), Federal Leadership in High Performance and Sustainable Buildings MOU	Executive Order 13423
LEED Credit(s) aligns closely with HPSB:	None	
LEED Credit(s) meet HPSB:	LEED MR Prerequisite 1: Storage and Collection of Recyclables	LEED(R) for New Construction & Major Renovations 2009 - Nov 2008
HPSB V.5: Waste and Materials Management, Divert 50% from Disposal	During a project's planning stage, identify local recycling and salvage operations that could process site-related construction and demolition materials. Provide salvage, reuse and recycling services for waste generated from major renovations, where markets or onsite recycling opportunities exist. During construction, recycle or salvage at least 50 percent of the non-hazardous construction, demolition and land clearing materials, excluding soil, where markets or onsite recycling opportunities exist.	HPSB Guidance
Requirement Source Document(s):	Federal Leadership in High Performance and Sustainable Buildings MOU	
LEED Credit(s) aligns closely with HPSB:	None	
LEED Credit(s) meet HPSB:	LEED MR Credit 2.1: Construction Waste Management	LEED(R) for New Construction & Major Renovations 2009 - Nov 2008
HPSB V.6: Ozone Depleting Compounds	Eliminate the use of ozone depleting compounds during and after construction where alternative environmentally preferable products are available, consistent with either the Montreal Protocol and Title VI of the Clean Air Act Amendments of 1990, or equivalent overall air quality benefits that take into account lifecycle impacts.	HPSB Guidance
Requirement Source Document(s):	Federal Leadership in High Performance and Sustainable Buildings MOU	
LEED Credit(s) aligns closely with HPSB:	LEED EA Credit 4: Enhanced Refrigerant Management	LEED(R) for New Construction & Major Renovations 2009 - Nov 2008
LEED Credit(s) meet HPSB:	LEED EA Prerequisite 3: Fundamental Refrigerant Management	

Alren N. Torillo

From: Renato Martinez <t.martinez@setiadiarchitects.com>
Sent: Monday, May 02, 2011 4:27 PM
To: a.torillo@ncmacario.com; ncm@ncmacario.com
Cc: j.setiadi@setiadiarchitects.com
Subject: FW: Thank you for your LEED Project Registration

Hi Al:
I used my personal Visa card to pay the US$900 to register the project, since it will only take credit card payment from the registered Project Administration. This email is the invoice generated by the system. As discussed, you can issue the reimbursement check to my name, Renato O Martinez.
Thanks.
Tato

-----Original Message-----
From: LEED Info [mailto:leedinfo@usgbc.org]
Sent: Monday, May 02, 2011 4:18 PM
To: T.MARTINEZ@SETIADIARCHITECTS.COM
Subject: Thank you for your LEED Project Registration

Dear Renato Martinez,

Your LEED project has been successfully registered in LEED Online v3.

Project ID: 1000015422

Project Title: REDHORSE Cantonment Operations Facilit

Project Rating System: LEED-NC v2009

Registration Type: Individual Project

Registration Date: 05/02/2011

Project Location: Yigo, GU US, 96929

You may now log into LEED Online v3 at https://www.leedonline.com to manage your project and begin the application process.
The first time you log in, you will be presented with a set of 'Getting Started' information that will help you kick off the certification process.
Further technical LEED assistance is available through the following
resources:

- The help section of LEED Online
- LEED Resources & Tools: http://www.usgbc.org/projecttools
- LEED Reference Guides:
http://www.usgbc.org/Store/PublicationsList_New.aspx?CMSPageID=1518
- LEEDuser, a third-party resource that offers a variety of supplemental LEED advice: http://www.leeduser.com

If you find an error within the LEED Online system, including any of the forms, please report it using of the feedback button, located in the menu bar. If you have questions about the technical content of LEED or the certification process, please contact the Green Building Certification Institute (GBCI).

If you experience any problems, please contact the Green Building Certification Institute (GBCI) at:
Phone: 1-800-795-1746
Email: www.gbci.org/ContactUs

Please note, only projects registered through LEED Online v3 will be visible in your LEED Online v3 project list. If you have previously registered a project under LOv2, you will only be able to access those projects in LEED Online v2.
Thank you,
GBCI

This is an automatically generated email. Please do not reply to this message.

GREEN BUILDING CERTIFICATION INSTITUTE

Payment Receipt

Dear Renato Martinez,

Thank you for your order. Please print or save this email for your records. Your payment has been received.

Invoice Date : 05/02/2011
Invoice # : 90559785
Order # : 11216083
Credit Card # : **********0016
Please see below for your order details:

Project ID : 1000015422
Project Name : REDHORSE Cantonment Operations Facility

Product Description	Order Quantity	Shipping Handling	List Price	Sales Tax	Total Price
LEED-NC v2009 Registration	1 EA	0.00	900.00	0.00	900.00
		Total Invoice (			900.00)

Thank you,

GBCI

1-800-795-1746

Attachment D

Life Safety & Fire Protection Analysis

LIFE SAFETY AND FIRE PROTECTION ANALYSIS

REDHORSE CANTONMENT OPERATIONS FACILITY

TABLE OF CONTENTS

		PAGE NO.
5.1	REFERENCES	5-1
5.2	GENERAL PARAMETERS	5-2
5.3	MEANS OF EGRESS REQUIREMENTS	5-3
5.4	PROTECTION	5-4

This fire protection design analysis is provided as required by UFC 3-600-01, paragraph 1-4.

5.1 REFERENCES

5.1.1 UFC 3-600-01, Unified Facilities Criteria (UFC), Design: Fire Protection Engineering for Facilities, dated 26 September 2006.

5.1.2 International Building Code (IBC), 2009 Edition

5.1.3 NFPA 101, Life Safety Code, 2009 Edition

5.1.4 NFPA 10, Portable Fire Extinguishers, 2007 Edition

5.1.5 NFPA 13, Installation of Sprinkler Systems, 2007 Edition

5.1.6 NFPA 72, National Fire Alarm Code, 2007 Edition

5.1.7 UFC 4-021-01, Mass Notification Systems, 2 APR 2008

5.1.8 PARSONS Requirements Document-Draft, Red Horse Headquarters Engineering Facility, Andersen Air Force Base, Guam

5.2 GENERAL PARAMETERS

5.2.1 General Requirement

The Requirements Document-draft by PARSONS, paragraph 9B indicates that an automatic sprinkler system is to be provided for this facility based on UFC 3-600-01 requirement. The fire suppression system shall be connected to the fire reporting system for transmission of fire alarms, trouble signals, and supervisory signals. Fire flow test shall be conducted in accordance with the procedures contained in NFPA 291, to verify available water supply for the water based fire extinguishing system. A registered professional engineer licensed to practice fire protection engineering in Guam shall be employed for this project.

5.2.2 Classification of occupancy

IBC 2009 section304: Business Group B
NFPA 101 2009, 38.1.4 & 6.1.11: New Business

5.2.3 Classification of hazard of contents

NFPA 101 2009, 38.1.5 & 6.2.2.3: Ordinary hazard

5.2.4 Type of Construction

IBC 2009, Table 601: Type IIB

Fire-Resistance Rating Requirements for Building Elements (IBC, Table 601)

Building Element	Material	Rating
Structural Frame	Noncombustible	0 hr
Exterior Bearing Wall	Noncombustible	0 hr
Interior Bearing Wall	Noncombustible	0 hr
Exterior Nonbearing Wall	Noncombustible	0 hr *
Interior Nonbearing Wall	Noncombustible	0 hr
Floor/Ceiling Assembly	Noncombustible	0 hr
Roof/Ceiling Assembly	Noncombustible	0 hr

* AASS = Approved Automatic Sprinkler System

5.2.5 Basic Allowable Floor Area

Per UFC 3-600-01 2-2, the basic allowable area shall conform to IBC 2009 Table 503.
Basic allowable floor area: 2,137 SM (23,000 SF)
Actual floor area: 1635 SM (17,602 SF)

5.2.6 Maximum Allowable Building Height

Per UFC 3-600-01 2-3, the allowable building height shall conform to IBC 2009 Table 503.
Allowable building height: 3 stories or 16.8 M(55 FT)
Actual building height: 1 story or 7.01 M (23 FT)

5.2.7 Occupant Load (For determining required exits only)

Occupant Load Factor (IBC 2009 Table 1004.1.1): Business areas, 9.3 SM/person, 100 (SF/person)
Occupant Load: 1635/9.3 = 85.3, say 175 persons

5.2.8 Per UFC 3-600-01 2-1.4, the separation between buildings shall comply with IBC 2009 Table 602 requirement of 9.1 M (30 FT) fire separation.

Future building to be constructed adjacent to this building will be 10 M (33 FT).

5.3 MEANS OF EGRESS REQUIREMENTS

5.3.1 Types of exits

NFPA 101 2009 38.2.2.2 & 7.2.1: Doors so designed and constructed so that the way of travel is obvious and direct.

5.3.2 Capacity of means of egress

NFPA 101 2009 Table 7.3.3.1: Egress capacity for a door as a means of egress is 5 MM (0.2 inch) per person.
Required capacity of exit doors: 175 X 5 (MM/PN) = 875 MM (34.4 inches)

Actual capacity of exit doors provided: 9 each @ 915 MM (36 inches) = 8,235 MM (324 inches)

NFPA 101 2009, 38.2.3.2: The clear width of any corridor or passageway serving an occupant load of 50 or more shall not be less than 1,120 MM (44 inches).
Actual corridor width provided: 2,134 MM (84 inches)

5.3.3 Number of exits

NFPA 101 2009, 38.2.4.2 (2): Not less than two separate exits shall be provided on every story.
Actual number of exits provided: 9 exits for the main building + 3 exit each for the mechanical room, electrical room, and communications room.

NFPA 101 2009, 38.2.4.3 (1) & (2): A single exit shall be permitted for a room or area with a total occupant load of fewer than 100 persons.
One 1,727 MM (68 inches) wide exit is provided for the mechanical room.

5.3.4 Arrangement of means of egress

NFPA 101 2009, 7.5.1: Exits shall so located and exit access shall be arranged so that exits are readily accessible at all times.

5.3.5 Dead end corridor limit

NFPA 101 2009, 38.2.5.2.1: Dead end corridors within a sprinklered, business occupancy shall not exceed 15 m (50 feet).

Actual length of dead-end corridor: 12.7m (41.67 FT)
Common path of travel

NFPA 101 2009, 38.2.5.3.1: Common path of travel shall not exceed 30 M (100 FT) in a building protected throughout by an approved, supervised automatic sprinkler system.

Actual common path of travel: 26.5 M (87 FT).

5.3.6 Travel distance to exits

NFPA 101 2009, 38.2.6.1: In buildings protected throughout by an approved, supervised automatic sprinkler system, the travel distance shall not exceed 91 M (300 FT).
Actual travel distance to exit: 16 M (52 FT).

5.3.7 Discharge from exits

NFPA 101 2009, Sec 7.7 & 38.2.7): All exits from the building shall discharge directly to the outside.

5.3.8 Illumination of means of egress, emergency lighting, and exit signs

Illumination of the means of egress and exit signs are required and shall be provided (NFPA 101 2009, 38.2.8 & 38.2.10).

Emergency lighting is not required since the occupancy is not subject to 300 or more occupants (NFPA 101 2009, 38.2.9 (3)).

5.4 PROTECTION

5.4.1 Extinguishing Requirements

The sprinkler system will be a wet-pipe system. Where exterior areas are protected, dry type sprinkler heads shall be used. The sprinkler hazard classification will be a combination of light hazard for the offices, Ordinary Hazard Group 1 for the shops and

ordinary hazard group 2 for the mechanical room (UFC 3-600-01, Appendix B).

5.4.2 Protection from hazards

NFPA 101 2009, 38.3.1.2: The area within the building considered hazardous for special construction is the Shops and Mechanical Room. The hazardous areas shall be protected with smoke partitions in accordance with NFPA 101 2009, 8.7.1.2. These smoke partitions shall comply with NFPA 101 2009, 8.4.

5.4.3 Interior finishes

UFC 3-600-01 2-6 and NFPA 101 2009 38.3.3.2.1 & 10.2: Interior wall and ceiling finish shall be Class A or B in exit corridors & spaces considered part of the exit way, and Class A, B, or C in all other spaces. Interior floor finishes shall be Class II.

5.4.4 Access to Roof

Firefighting access to the roof is not required since the building is less than three stories high (UFC 3-600-01 2-9).

5.4.5 Detection, alarm, and communication systems

Fire alarm evacuation systems with sprinkler supervision and fire department notification will be provided in this facility.

5.4.6 Corridors and Lobbies

NFPA 101 2009, 38.3.6.1 (2) & (3): Because this building is used by a single tenant and is fully sprinklered, corridors and lobbies need not be protected with fire resistant construction.

5.4.7 Extinguishment requirements

NFPA 101 2009, 38.3.5: Portable fire extinguishers shall be provided.

5.4.8 Fire Department Access

UFC 3-600-01, 2-10.1: Fire department apparatus access via an all weather surface from at least one side of the building which terminates no further than 10 meters from the building shall be provided.

Attachment E

Flow Test Report

S. S. DANNAWAY ASSOCIATES, INC.

Fire Protection Engineers/Building Code Consultants

Test # 1 of 2

HYDRANT FLOW TEST REPORT

DATE: 28-Apr-10

LOCATION: Northwest Field, Anderson AFB, Guam
Combat Communication Facility

TIME: 01:30 PM

TEST MADE BY: Jay Higashi

REPRESENTATIVE OF: S. S. DANNAWAY ASSOCIATES, INC.

WITNESS: Julio B Meregillano, Reliable Builders

STATE PURPOSES OF TEST: To determine the available water supply.

PRESSURE HYDRANT (TEST HYDRANT): Fire Hydrant located near the point of connection of 6" waterline.

GAGE ID/CALIB DATE: SSDA #1049930, 10/30/2009

FLOW HYDRANT: Fire Hydrant located by the warehouse.

PITOT GAGE ID/CALIB DATE: SSDA #5384909001, 3/10/2010

FLOW HYDRANT DATA:

	Flow 1		Flow 2		
No. & SIZE NOZZLE (in.)	1	2 1/2	2	2 1/2	Nozzle coefficients:
					flowtubes = 0.90 - 0.95
PITOT READING(S)	36				hydrant butts:
	tube				rounded edge = 0.90
DISCHARGE COEFF.	0.95				sharp edge = 0.80
					inset edge = 0.70
GPM	1,063				smooth nozzle = 0.95

PRESSURE (TEST) HYDRANT DATA

STATIC PRESSURE: 73 psi

RESIDUAL PRESSURE(S): Flow 1 53.6 psi Flow 2 _____ psi

PROJECTED AVAILABLE WATER SUPPLIES

@ 20 psi Residual 1,829 gpm or @ 30 psi Residual 1,634 gpm

REMARKS:

Pressure Hydrant - Clow No. 76, wet barrel, two 2 1/2", one pumper connection.
Flow Hydrant - Clow No.76, wet barrel, two 2 1/2", one pumper connection.
Note: Fire pump not on. Water supply from domestic supply.

720 Iwilei Road, Suite 412/Honolulu, Hawaii 96817-5316/Telephone (808) 526-9019/Facsimile: (808) 537-5385

S. S. DANNAWAY ASSOCIATES, INC.

Northwest Field, Anderson AFB, Guam
TEST 1 OF 2

4/28/2010

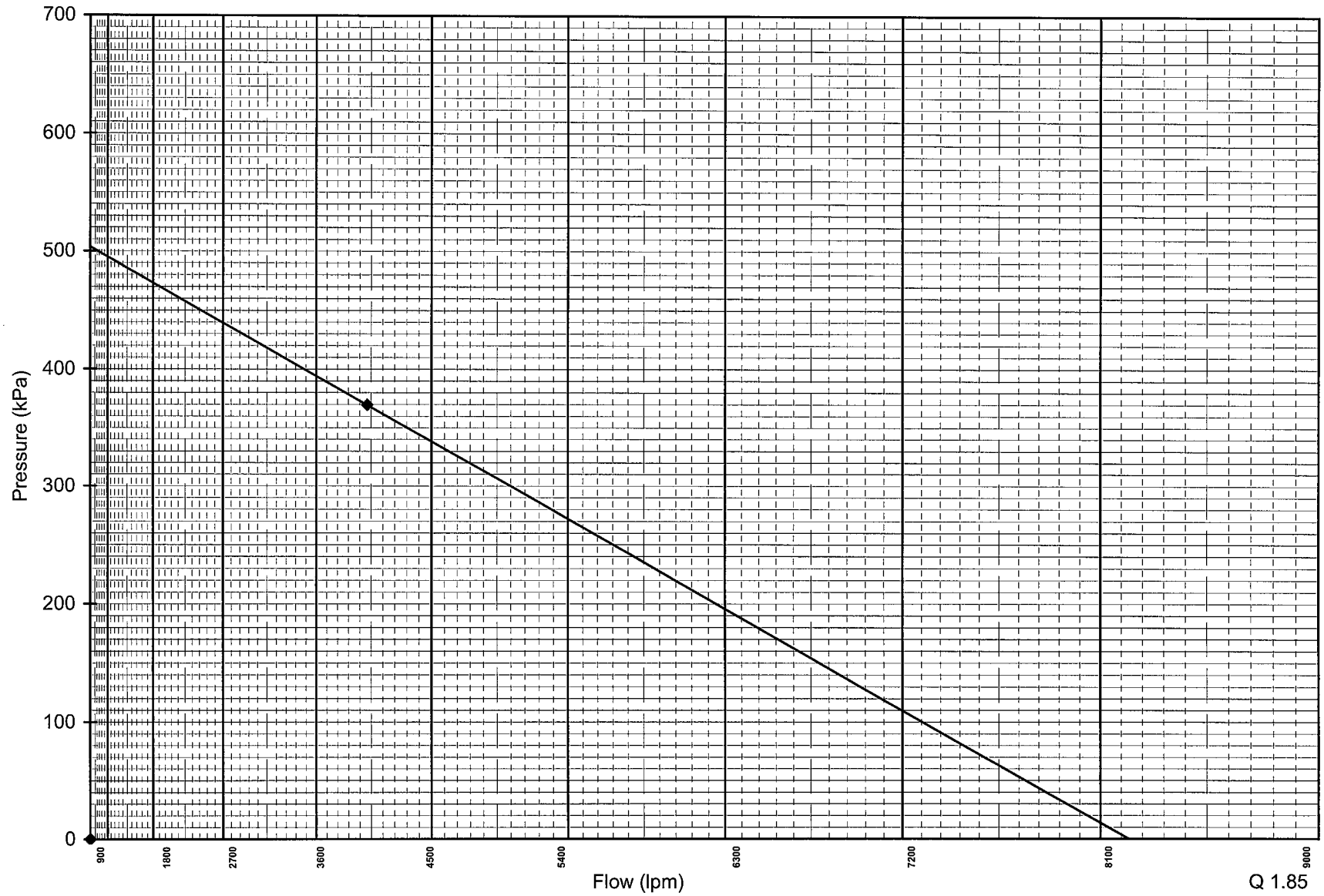

Q 1.85

S. S. DANNAWAY ASSOCIATES, INC.

Fire Protection Engineers/Building Code Consultants

Test # 1 of 2

HYDRANT FLOW TEST REPORT

DATE: 28-Apr-10

LOCATION: Northwest Field, Anderson AFB, Guam
Combat Communication Facility

TIME: 1:30 PM

TEST MADE BY: Jay Higashi

REPRESENTATIVE OF: S. S. DANNAWAY ASSOCIATES, INC.

WITNESS: Julio B Meregillano, Reliable Builders

STATE PURPOSES OF TEST: To determine the available water supply.

PRESSURE HYDRANT (TEST HYDRANT): Fire Hydrant located near the point of connection of 6" waterline.

GAGE ID/CALIB DATE: SSDA #1049930, 10/30/2009

FLOW HYDRANT: Fire Hydrant located by the warehouse.

PITOT GAGE ID/CALIB DATE: SSDA #5384909001, 3/10/2010

FLOW HYDRANT DATA:

	Flow 1		Flow 2		
No. & SIZE NOZZLE (mm)	1	63 1/2	2	63 1/2	Nozzle coefficients:
					flowtubes = 0.90 - 0.95
PITOT READING(S)	248.2				hydrant butts:
	tube		0	0	rounded edge = 0.90
DISCHARGE COEFF.	0.95				sharp edge = 0.80
					inset edge = 0.70
LPM	4,019				smooth nozzle = 0.95

PRESSURE (TEST) HYDRANT DATA

STATIC PRESSURE: 503.3 kPa

RESIDUAL PRESSURE(S): Flow 1 369.6 kPa Flow 2 _____ kPa

PROJECTED AVAILABLE WATER SUPPLIES

@ 135 kPa Residual 6,945 lpm or @ 207 kPa 6,178 lpm

REMARKS:

Pressure Hydrant - Clow No. 76, wet barrel, two 65 mm, one pumper connection.
Flow Hydrant - Clow No.76, wet barrel, two 65 mm, one pumper connection.
Note: Fire pump not on. Water supply from domestic supply.

720 Iwilei Road, Suite 412/Honolulu, Hawaii 96817-5316/Telephone (808) 526-9019/Facsimile: (808) 537-5385

S. S. DANNAWAY ASSOCIATES, INC.

Northwest Field, Anderson AFB, Guam
TEST 1 OF 2

4/28/2010

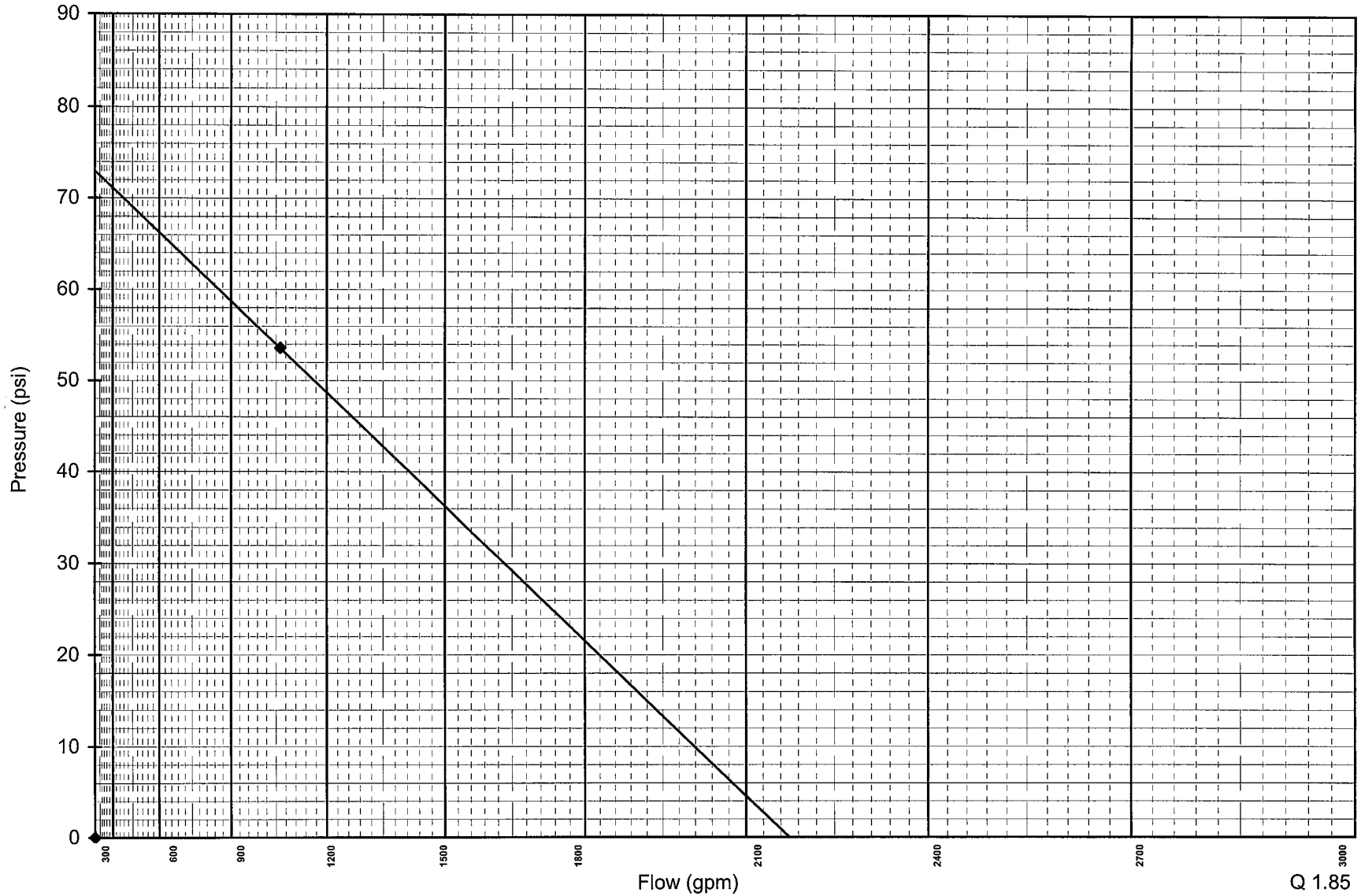

Q 1.85

Flow Test 1 of 2
Combat Communication Facility
Northwest Field, Anderson AFB, Guam
4/28/2010

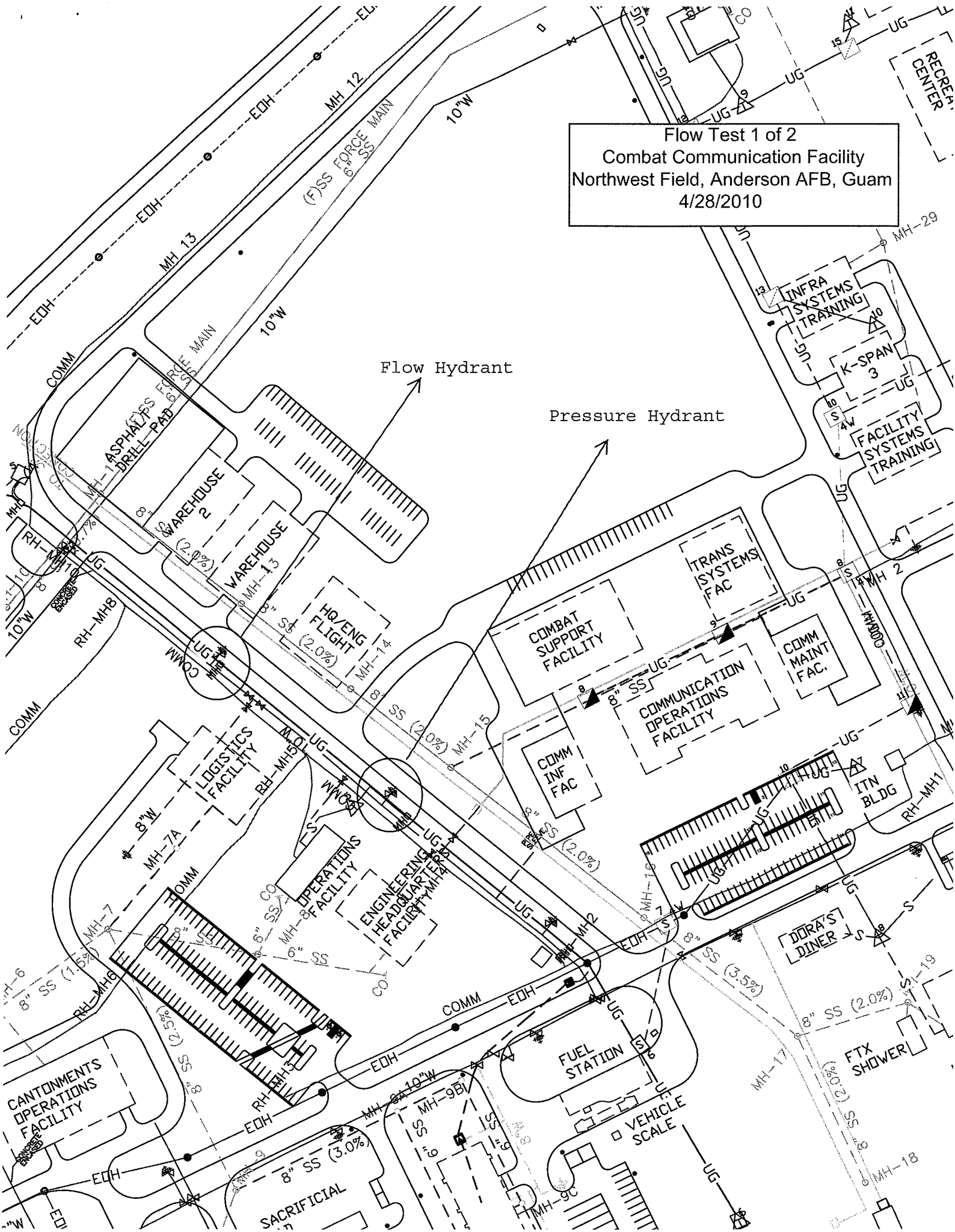

S. S. DANNAWAY ASSOCIATES, INC.

Fire Protection Engineers/Building Code Consultants

Test # 2 of 2

HYDRANT FLOW TEST REPORT

DATE: 28-Apr-10

LOCATION: Northwest Field, Anderson AFB, Guam
Combat Communication Facility

TIME: 01:30 PM

TEST MADE BY: Jay Higashi

REPRESENTATIVE OF: S. S. DANNAWAY ASSOCIATES, INC.

WITNESS: Julio B Meregillano, Reliable Builders

STATE PURPOSES OF TEST: To determine the available water supply.

PRESSURE HYDRANT (TEST HYDRANT): Fire Hydrant located near the point of connection of 6" waterline.

GAGE ID/CALIB DATE: SSDA #1049930, 10/30/2009

FLOW HYDRANT: Fire Hydrant located by the warehouse.

PITOT GAGE ID/CALIB DATE: SSDA #5384909001, 3/10/2010

FLOW HYDRANT DATA:

	Flow 1		Flow 2		
No. & SIZE NOZZLE (in.)	1	2 1/2	2	2 1/2	Nozzle coefficients:
					flowtubes = 0.90 - 0.95
PITOT READING(S)	56		35	36	hydrant butts:
	tube		tube	tube	rounded edge = 0.90
DISCHARGE COEFF.	0.95		0.95	0.95	sharp edge = 0.80
					inset edge = 0.70
GPM	1,326		2,111		smooth nozzle = 0.95

PRESSURE (TEST) HYDRANT DATA

STATIC PRESSURE 115 psi

RESIDUAL PRESSURE(S) Flow 1 98 psi Flow 2 83 psi

PROJECTED AVAILABLE WATER SUPPLIES

@ 20 psi Residual 3,358 gpm or @ 30 psi Residual 3,162 gpm

REMARKS:

Pressure Hydrant - Clow No. 76, wet barrel, two 2 1/2", one pumper connection.
Flow Hydrant - Clow No.76, wet barrel, two 2 1/2", one pumper connection.
Note: Fire pump running during test. Fire pump starts at 45 psi. Manual shut down.

720 Iwilei Road, Suite 412/Honolulu, Hawaii 96817-5316/Telephone (808) 526-9019/Facsimile: (808) 537-5385

S. S. DANNAWAY ASSOCIATES, INC.

Northwest Field, Anderson AFB, Guam
TEST 2 OF 2

4/28/2010

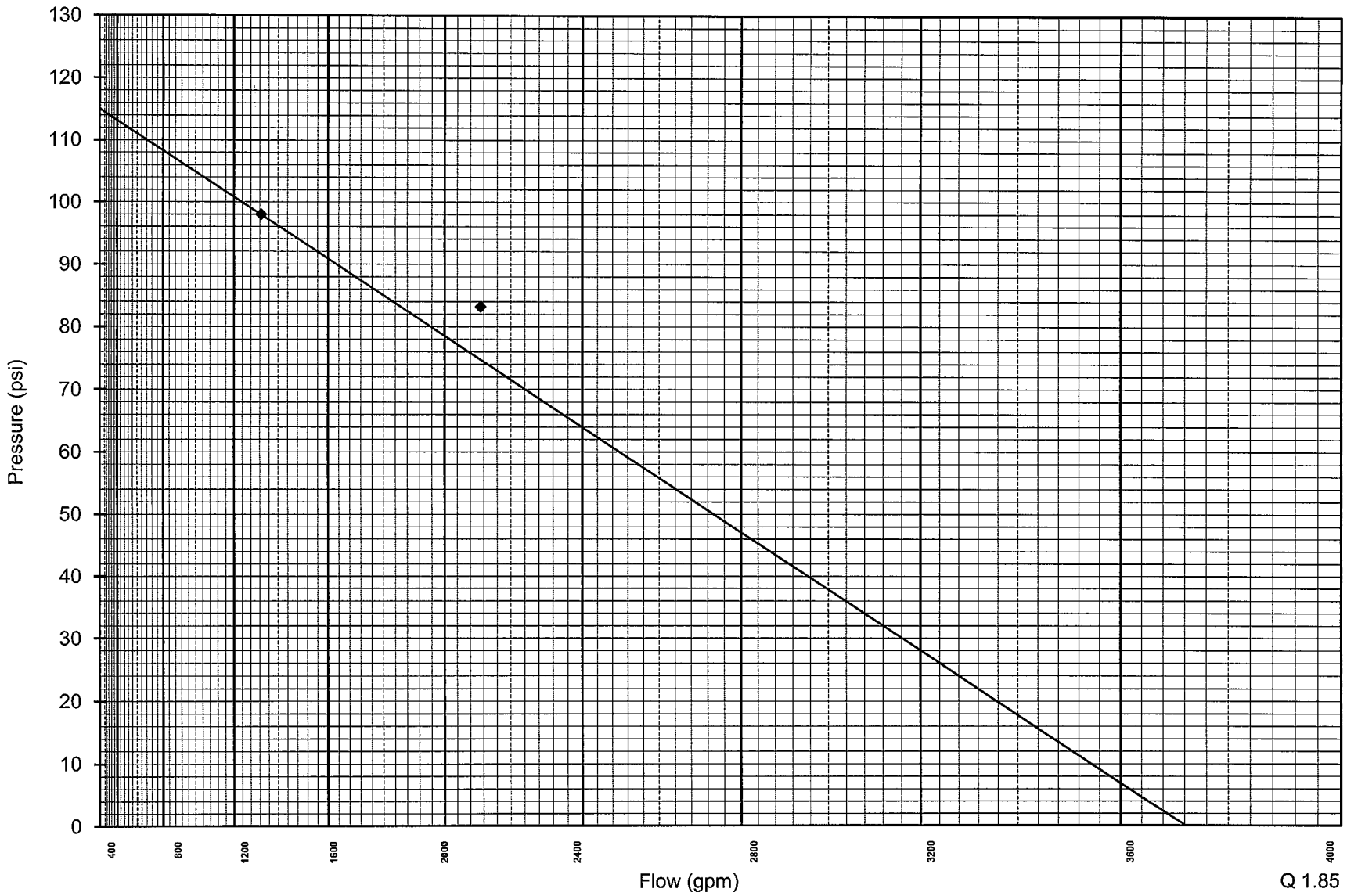

Q 1.85

S. S. DANNAWAY ASSOCIATES, INC.

Fire Protection Engineers/Building Code Consultants

Test # 2 of 2

HYDRANT FLOW TEST REPORT

DATE: 28-Apr-10

LOCATION: Northwest Field, Anderson AFB, Guam
Combat Communication Facility

TIME: 1:30 PM

TEST MADE BY: Jay Higashi

REPRESENTATIVE OF: S. S. DANNAWAY ASSOCIATES, INC.

WITNESS: Julio B Meregillano, Reliable Builders

STATE PURPOSES OF TEST: To determine the available water supply.

PRESSURE HYDRANT (TEST HYDRANT): Fire Hydrant located near the point of connection of 6" waterline.

GAGE ID/CALIB DATE: SSDA #1049930, 10/30/2009

FLOW HYDRANT: Fire Hydrant located by the warehouse.

PITOT GAGE ID/CALIB DATE: SSDA #5384909001, 3/10/2010

FLOW HYDRANT DATA:

	Flow 1		Flow 2		
No. & SIZE NOZZLE (mm)	1	63 1/2	2	63 1/2	Nozzle coefficients:
					flowtubes = 0.90 - 0.95
PITOT READING(S)	386.1		241.3	248.2	hydrant butts:
	tube		tube	tube	rounded edge = 0.90
DISCHARGE COEFF.	0.95		0.95	0.95	sharp edge = 0.80
					inset edge = 0.70
LPM	5,013		7,982		smooth nozzle = 0.95

PRESSURE (TEST) HYDRANT DATA

STATIC PRESSURE 792.9 kPa

RESIDUAL PRESSURE(S) Flow 1 675.7 kPa Flow 2 573.6 kPa

PROJECTED AVAILABLE WATER SUPPLIES

@ 135 kPa Residual 12,725 lpm or @ 207 kPa 11,955 lpm

REMARKS:

Pressure Hydrant - Clow No. 76, wet barrel, two 65 mm, one pumper connection.
Flow Hydrant - Clow No.76, wet barrel, two 65 mm, one pumper connection.
Note: Fire pump running during test. Fire pump starts at 310 kPa. Manual shut down.

720 Iwilei Road, Suite 412/Honolulu, Hawaii 96817-5316/Telephone (808) 526-9019/Facsimile: (808) 537-5385

S. S. DANNAWAY ASSOCIATES, INC.

Northwest Field, Anderson AFB, Guam
TEST 2 OF 2

4/28/2010

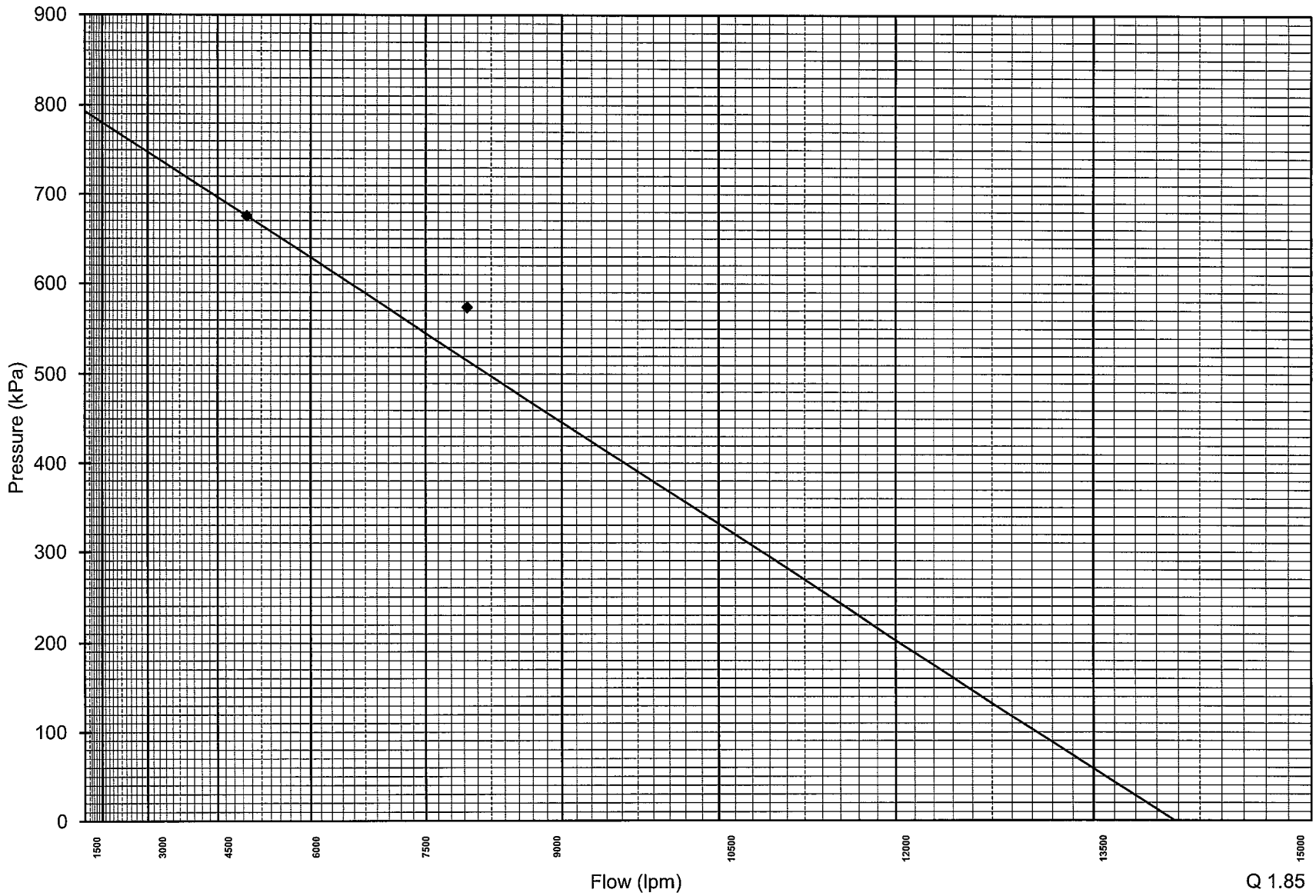

Q 1.85

Flow Test 2 of 2
Combat Communication Facility
Northwest Field, Anderson AFB, Guam
4/28/2010

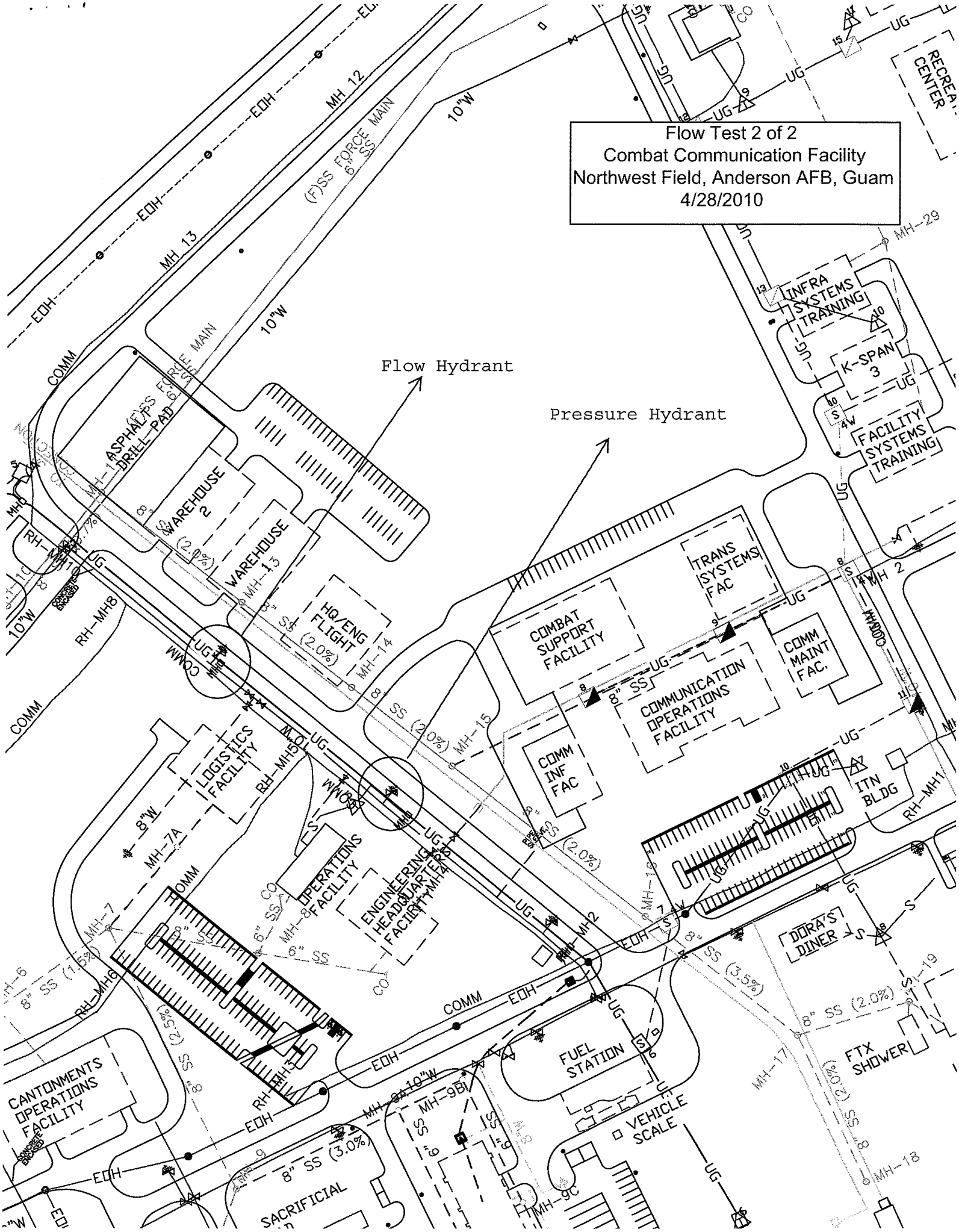

Attachment F

Explosive Safety Submission (ESS)

1.0 MUNITIONS AND EXPLOSIVES OF CONCERN (MEC)

This specification is intended to accomplish an MEC/unexploded ordnance (UXO) pre-construction clearance for a particular site to be developed. Briefly, the scope of work (SOW) is to:

- Pre-Construction MEC/UXO Clearance – Surface and subsurface clearance including geophysical mapping and focused excavation of Targets of Interest (TOI) in the area to be developed.
- The geophysically interpreted TOI is the 20mm projectile.
- Clearance is performed to the depth of detection or until bedrock is encountered (discussed further below).
- At the completion of the clearance, the site is released for construction as a low (green) probability area as defined in the current Explosives Safety Submission (ESS).
- On-call construction support would be provided by a qualified UXO-contractor (on-site is optional) with emergency support provided by the cognizant military Explosives Ordnance Disposal (EOD) unit.

1.1 References

1. Safety and Health Requirements Manual EM-385-1-1, US Army Corps of Engineers (USACE), 15 September 2008
2. ESS Munitions Response Sites, Guam Construction Support, Amendment 4, In process
3. SWPD3 Clean Water Act
4. Draft - Historical Ordnance Assessment Guam and CNMI Area, P-50, TERRITORY OF GUAM AND TINIAN, CNMI – January 2010
5. Department of the Navy (DON) Naval Ordnance Safety and Security Activity (NOSSA) Instruction 8020.15C, February 2011
6. Naval Sea Systems Command (NAVSEA) Ammunition and Explosives Ashore: Safety Regulations for Handling, Storing, Production, Renovation, and Shipping, Operating Procedure (OP) 5, Volume 1, Seventh Revision, 2007
7. Department of Defense Explosives Safety Board (DDESB) Technical Paper (TP) 18, Minimum Qualifications for UXO Technicians and Personnel, December 2004.

In all cases, the most recent revisions of the above documents shall apply.

1.2 Project Description

This project will provide pre-construction and construction support MEC clearance for the project site. The qualified MEC/UXO Contractor is to perform and meet all MEC clearance requirements as identified in the NAVFAC ESS. These include, but are not limited to: to detect, identify, and remove MEC anomalies to their depth of detection or until bedrock is encountered; and provide on-call UXO support during construction activities.

The NAVFAC ESS has classified Naval Base Guam (NBG) and Andersen Air Force Base

(AAFB) into areas of Low (Green), Moderate (Yellow), and High (Red) probability areas of encountering MEC. Refer to the NAVFAC ESS for the particular classification(s) of the project site.

The MEC/UXO Contractor (through the Prime Contractor, if not the same) will be responsible for immediately notifying the Contracting Officer’s Representative for all identified MEC to be transferred off-site and removed from the referenced site by the MEC/UXO Contractor. The MEC/UXO Contractor will be responsible for providing all necessary MEC/UXO coordination and communication with the Department of Defense (DOD).

It is the responsibility of the Prime Contractor to present an overall construction schedule that includes the MEC clearance activities within the overall construction time line in the base bid.

1.3 MEC Personnel Requirements
Personnel shall meet the minimum qualification standards set forth in DDESB TP 18 and the ESS Section 8.0 Technical Support, including training and experience requirements.

1.3.1 Senior Unexploded Ordnance Supervisor (SUXOS)
Duties include planning, coordinating, and on-site supervision of all Contractor MEC operations. A graduate of a military EOD School in the United States, Canada, Great Britain, Germany or Australia, or a graduate of a formal training course of instruction meeting the minimum training and curriculum requirements of DDESB TP 18 Chapter 3. Minimum 10 years of EOD/UXO experience, including 5 years of experience in supervisory positions.

1.3.2 UXO Safety Officer (UXOSO)
Duties include developing and implementing an approved explosives and UXO health and safety program, analyze operational risks, explosive hazards, and safety requirements, establish and ensure compliance with all site-specific explosive operations safety requirements, enforce personnel limits and safety Exclusion Zones (EZs), conduct and document results of safety inspections. A graduate of a military EOD School in the United States, Canada, Great Britain, Germany or Australia, or a graduate of a formal training course of instruction meeting the minimum training and curriculum requirements of DDESB TP 18 Chapter 3. Minimum 8 years of EOD/UXO experience.

1.3.4 UXO Quality Control Specialist
Duties include assisting the QC Manager as required, including developing and implementing the MEC-specific Quality Control Plan for all explosive related operations, conducting and documenting quality control audits of all explosive operations for compliance with required procedures, and identifying, reporting, and ensuring the completion of all corrective actions. A graduate of a military EOD School in the United States, Canada, Great Britain, Germany or Australia, or a graduate of a formal training course of instruction meeting the minimum training and curriculum requirements of DDESB TP 18 Chapter 3. Minimum 8 years of EOD/UXO experience.

1.3.5 UXO-Sweep Personnel
Duties include assisting UXO technicians and UXO-qualified personnel in the performance of UXO-related operations. UXOSP do not have to be a UXO technician, however, they shall be provided job and site specific training. Such training shall, at a minimum include training in: explosives safety; recognition of MEC, particularly UXO; and the proper use of personal protective equipment (PPE).

UXOSP are not involved in the execution of explosives operations and shall not have intentional physical contact with MEC. Specific allowable field activities are presented in TP-18, Section C2.

1.3.6 UXO Technician I
In addition to being able to fully perform all of the UXO Sweep Personnel functions above, and with direction and supervision from UXO-qualified personnel, UXO Technician I personnel may reconnoiter and classify MEC (including UXO), identify all types of military munitions, excavate subsurface anomalies that are potentially MEC, move and/or consolidate MEC that has been determined acceptable for movement within a Munitions Response Site (MRS) or Munitions Response Area (MRA), but not over public traffic routes. Additional specific allowable activities are presented in TP-18, Section C2.

1.3.7 UXO Technician II
Duties include conducting visual and detector-aided MEC search activities, locate subsurface MEC, maintain and calibrate equipment, remove non-hazardous munitions debris, perform site security functions, classify and identify all types of military munitions, excavate subsurface MEC, move and consolidate MEC, transport demolition materials and MEC that have been deemed safe for transport over public traffic routes, prepare firing systems for demilitarization operations, prepare on-site holding area, operate modes of transport for transporting MEC, escort personnel with exclusion zones, and inspect munitions potentially presenting an explosive hazard (MPPEH) for the presence of explosive safety hazards. A graduate of a military EOD School in the United States, Canada, Great Britain, Germany or Australia, or a graduate of a formal training course of instruction meeting the minimum training and curriculum requirements of DDESB TP 18 Chapter 3. Minimum 3 years of EOD/UXO experience in munitions response actions.

1.3.8 UXO Technician III
Duties include those performed by UXO Technician II, plus supervising and performing on-site demilitarization of MEC, handling of demolition materials, preparation of an explosives storage plan, preparation of UXO munitions response actions, preparation of standard operating procedures for on-site munitions responses, assisting in the preparation of risk & hazard analyses, conducting daily safety briefings, supervising the conduct of all on-site UXO-related operations, and inspecting & certifying MPPEH as safe or as to the explosive hazard it may present. A graduate of a military EOD School in the United States, Canada, Great Britain, Germany or Australia, or a graduate of a formal training course of instruction meeting the minimum training and curriculum requirements of DDESB TP 18 Chapter 3. Minimum 8 years of EOD/UXO experience in munitions response actions.

1.4 Submittal Requirements
The MEC/UXO Contractor shall provide all services, labor and material required to develop an MEC Clearance WP and supporting documents as outlined below. The plan(s) shall be submitted in Draft form for NAVFAC Marianas review at least 60 calendar days prior to the start of any ground disturbing activities. Comments will be provided. A Response to Comments (RTC) submittal and meeting is required. The MEC Clearance WP shall then be issued Final with all comments addressed to the satisfaction of NAVFAC Marianas.

1.4.1 MEC Clearance Work Plan (WP)

The MEC Clearance WP shall include, but not be limited to the following:
a. Describe the overall approach to manage and execute the Phase 1 and Phase 2 MEC-related work. The WP shall identify the field survey objectives, and include the project organization and schedule. The WP shall describe the overall approach for the field effort and provide details on the equipment and methods to be used. The WP shall detail the primary and contingency munitions with the greatest fragmentation distances (MGFD) and the exclusion zones that shall apply, plus detail any reductions in exclusion zones that may be realized through armoring. Determination of the surface clearance requirements and whether they shall be accomplished either before or after the vegetation removal (or at all) prior to the geophysical survey (based on site specific determinations) shall be provided. The WP shall also address site specific logistical requirements such as water/ electrical/ other utilities requirements, site restoration work and MEC disposal. Address on-going activities adjacent to the project site that may be impacted by the EZ established during construction excavation (e.g., traffic along adjacent roads, housing, offices, etc.). Provide figures showing exclusion zones for primary and contingency munitions with the greatest fragmentation distances (MGFDs).
b. MEC personnel organization, including organizational chart and the names and qualifications of MEC personnel in resume’ format.
c. Site specific logistical requirements, including staging and storage areas, laydown areas, designated soil storage and sifting operations, management and disposal of waste generated from field operations, and coordination with on-going construction activities.
d. Traffic Control Plan, including traffic control measures to be used should temporary road closures be necessary and mitigating measures such as alternate work schedules to be employed during anomaly investigation to minimize traffic impacts. Should temporary road closures and re-routing of vehicular traffic be required, the Contractor shall be responsible for signage, devices, flag men, and other control measures required to safely effect any change in traffic flow. The Traffic Control Plan may be included in the Traffic Control Plan required by Section 01 50 00 TEMPORARY CONSTRUCTION FACILITIES AND CONTROLS.
e. Community Outreach Plan, including communications measures the Contractor recommends the Government employ to notify local residents (if applicable) and base activities of MEC-related work and to coordinate its anticipated impact upon them. Impacts to be considered may include temporary road closures in coordination with the Traffic Control Plan, and temporary evacuation or relocation of occupants of buildings that fall within Exclusion Zones. Mitigation measures to be considered include alternate work schedules, night and weekend work to minimize impacts to surrounding residents and base activities, if applicable.
f. Communications Plan, including points of contact within the Prime Contractor and MEC/UXO Contractor organizations for communication to the DOD related to MEC/UXO discoveries, transportation/storage requirements, and other site activities, as necessary. The plan shall include a list of DOD components that the MEC/UXO Contractor requires access to and whether that access requirement is 24/7 or business hours only.
g. Schedule, including description of approach for scheduling and coordinating all field activities with the DOD. The DOD shall be responsible for coordination with the base activities.
h. Additional submittal components of the MEC Clearance WP include:

I. Environmental Protection Plan – specify any Vegetation Removal Plan
II. Environmental Conditions Report
III. Hazardous Waste Management Plan
IV. Emergency and Hazardous Chemical Inventory Forms

V. Toxic Chemical Release Report

1.4.2 MEC Accident Prevention Plan (APP) / Site Safety and Health Plan (SSHP)
Describe site-specific hazards and the procedures to protect the health and to ensure the safety of all workers and the public during MEC activities. Include worker protective clothing and equipment, staging area, and waste disposal requirements. The MEC APP may be included in the Accident Prevention Plan required by Section 01 35 26 GOVERNMENT SAFETY REQUIREMENTS and shall be compliant with USACE EM 385-1-1.

1.4.3 MEC Project Quality Control Plan (PQCP).
Contractor shall prepare a PQCP, which describes the project-specific quality control procedures that will be implemented during all aspects of the field work, including, but not limited to the Vegetation Removal, Surface Clearance, Geophysical Survey, Data Processing, Data Interpretation, Target Acquisition, Intrusive Operations, Soil Excavation, Construction Avoidance, Soil Sifting and Screening, MEC Identification/ Storage/ Transportation/ Disposal. Specific details on the instrument validation strip (IVS) and blind seeding procedures shall be included. The MEC PQCP may be included in the Construction Quality Control Plan required by Section 01 45 00.00 20 QUALITY CONTROL.

The PQCP shall address the following submittal requirements. The MEC/UXO Contractor shall submit the following deliverables to the MEC/UXO Naval Technical Representative. Allow 14 calendar days for all government reviews:

Submissions	**Copies**	**Timeframe**
Draft MEC Clearance WP	Electronic, bookmarked .pdf and .doc files	60 calendar days prior to field work start.
Response to government comments on Draft MEC Clearance WP	Electronic, .pdf and .doc (or .xls) file	Government return plus 7 calendar days
Final MEC Clearance WP	6 hard copies, each with CD, bookmarked .pdf and .doc files	Government approval plus 7 calendar days
Weekly status report	Electronic	Weekly
Draft After Action Report	Electronic, bookmarked .pdf and .doc files	Field QA acceptance plus 30 days
Response to Government comments on Draft After Action Report	Electronic, .pdf and .doc (or .xls) file	Government return plus 10 days
Final After Action Report	6 hard copies, each with CD, bookmarked .pdf and .doc files	Government approval plus 10 days

The following requirements apply to the CD ROM.

1. A native file in .doc format will be provided for all reports.
2. A .pdf file(s) of the final documents shall be provided in the following formats:
   The entire document shall be provided as one pdf file. The pdf file shall have bookmarks for each item identified in the document's table of contents, including tables, figures, captioned photos, and appendices. The bookmark shall use the same description as provided in the table of contents. If the bookmark is lengthy, abbreviate as needed. Bookmark to the second level (i.e. 1.1, 1.2, 1.3, etc.). Do not bookmark signature

page of the list of acronyms.
Each appendix, regardless of size, shall be provided as an individual pdf file.
All maps, figures, and pictures shall be provided at a useable resolution. All color maps, figures, and pictures shall be provided in color.

3. The CD jewel case cover (outside front) and CD label shall use the current approved layout and include:
   a. Report Title
   b. Task Order Number
   c. Contract
   d. NAVFAC Marianas Logo
   e. Date Report Finalized
   f. Location
   g. Site
4. The jewel case spine shall identify the report. In the event that multiple reports are requested on one CD, a logical title shall be used for the Report Title.

1.5 MEC Clearance Requirements

1.5.1 Requirements for Low (Green) MEC Probability Areas

Low-probability (green) areas do not require MEC clearance ahead of or during construction or construction equipment to be shielded. On-call construction support shall be provided by a UXO Contractor with emergency support provided by the cognizant DOD EOD units.

1.5.1.1 Requirements When MEC is Encountered in Low MEC Probability Areas

Stop work immediately if any material or object believed to be MEC/MPPEH is encountered and notify the SUXOS and the Contracting Officer. The SUXOS shall make a recommendation to the Contracting Officer if the area within which the MEC/MPPEH was encountered should be reclassified as Moderate (Yellow) or High (Red).

1.5.2 Requirements for Moderate (Yellow) and High (Red) MEC Probability Areas

The MEC/UXO Contractor shall complete surface clearance and subsurface clearance of all MEC larger than a 20mm projectile in Moderate (Yellow) and High (Red) Probability Areas prior to the Notice to Proceed (NTP). No ground disturbance by the construction contractor will be allowed to start until the surface and subsurface clearance operations are complete, and any MEC or MPPEH larger than a 20mm projectile have been removed to their depth of detection, until bedrock is reached, or until practical or safe limits to the excavation have been reached as determined by the SSHS and approved by the Navy Technical Representative.

1.5.2.1 Surface Clearance in Moderate and High Probability Areas

The MEC/UXO Contractor shall perform surface clearance in accordance with the ESS Section 6.1.1. The MEC/UXO Contractor shall sweep the project site using detector-aided visual means and shall clear vegetation that directly impedes the movement of detection equipment and personnel. The MEC/UXO Contractor’s clearance of vegetation shall be limited to brush, vines, small trees and tree limbs, which shall be cleared to a height between 76-152mm (3-6 inches). Following the removal of the vegetation, the MEC/UXO Contractor shall conduct a detector-aided surface clearance. The purpose of the surface clearance shall be to remove cultural debris that would affect the quality of the geophysical survey and remove surface MEC that would pose a hazard to site operations. The

MEC/UXO Contractor is not required to establish an EZ during surface clearance unless suspected MEC/MPPEH items are discovered. The MEC/UXO Contractor shall coordinate the disposition of any MEC or MPPEH discovered during surface clearance operations.

1.5.2.2 Subsurface Clearance in Moderate and High Probability Areas
Upon completion of surface clearance operations, the MEC/UXO Contractor shall perform subsurface clearance (intrusive investigations) in accordance with the ESS Section 6.1.2. Unless approved by the Contracting Officer based on site accessible constraints or other conditions, the basis of the subsurface clearance shall be a geophysical survey of the project site with data processing and interpretation conducted to identify TOI. Geophysical equipment will be validated on the IVS as required by the PQCP. Data acquisition techniques, processing, and interpretation will be validated through the blind seed QC program. Following interpretation and generation of the TOI for investigation, target reacquisition will be conducted using identical or compatible geophysical and positioning equipment. In areas where geophysical survey techniques cannot be employed, the MEC/UXO Contractor shall survey the project site using an analog detector and will mark any subsurface metallic anomalies detected. The intrusive investigation schedule shall be coordinated by the MEC/UXO contractor with the Government prior to the establishment of any EZs. No other work can take place within the EZ, and nonessential Contractor personnel will not be permitted within the EZ. Once the EZ has been established and cleared of nonessential personnel, the MEC/UXO Contractor shall excavate the location of anomalies to discover their identity. The MEC/UXO Contractor shall coordinate the disposition of any MEC or MPPEH discovered as a result of the intrusive investigations. The EZ will remain in effect until such items are disposed.

1.5.2.3 Soil Excavation and Removal in Cleared Moderate and High Probability Areas
Upon completion and approval by the Government of subsurface clearance operations, earthwork and other ground disturbance activities may commence. No EZ is required, as the site is considered a low (green) probability area of encountering UXO.

1.5.2.3.1 Clearing and Grubbing
Clear and grub vegetation remaining from the surface clearance operations and haul it to an area designated for vegetation processing or storage. Inspect for embedded MEC all 102mm (4 inch) diameter and larger tree root balls that are to be removed. Coordinate the disposition of any MEC or MPPEH discovered. Materials cleared of MEC/MPPEH will be released for disposition per Section 31 11 00 CLEARING AND GRUBBING.

1.5.2.3.2 Excavated Soils
Excavated soils shall not be released for use or disposal off of DOD property prior to being screened for MEC/UXO. Screening procedures are presented in the ESS. Consider using or wasting excavated soils on-site.

Excavated soil that has been cleared and released will be clearly marked as cleared and controlled to prevent co-mingling with excavated soil that has not been cleared. Mechanized excavation and grading equipment handling soil that has been cleared and released does not have to be shielded.

1.5.3 Requirements When MEC is Encountered

a. Stop work immediately if any material or object believed to be MEC/MPPEH is encountered and notify the UXO Technician III, UXOSO or SUXOS. After notifying the MEC personnel, notify the Contracting Officer. After notifying the Contracting Officer, classify, temporarily store, transport, and dispose of items in accordance with ESS Sections 6.3 MEC/MPPEH Hazard Classification, Storage and Transportation and 6.4 MEC/MPPEH Disposition Process, except as noted below:

MEC and MPPEH storage, transportation, and disposal will be accomplished by military EOD (Refer to ESS clause 6.3). Military EOD will provide MEC/MPPEH transportation per contractor’s request on a daily basis.

The Contractor shall not blow-in-place or counter-charge any MEC/MPPEH encountered.

If MEC/MPPEH encountered is determined by the SUXOS to be unsafe to move, poses a threat to human health and the environment or represents an imminent and substantial endangerment to human health and the environment, notify the Contractor Officer immediately, who will in turn coordinate with Explosive Ordnance Disposal Mobile Unit Five (EODMU-5) for further disposition.

b. Outside of construction excavation activities, stop work immediately if any material or object believed to be MEC/MPPEH is encountered, and immediately notify the Contracting Officer. The Contracting Officer will coordinate with EODMU-5 and will respond with a determination of how to proceed within 24 hours of notification.

1.6 Reporting

MEC/UXO Contractor shall provide weekly reports documenting site status and accomplishments, areas of concern, visitors, MEC discoveries with locations, identification, and a photograph with a scale, QC inspections performed and their outcome, open items, and other activities as agreed to by the Navy, the Prime Contractor, and the MEC/UXO Contractor. Written responses to all comments on weekly reports shall be provided. The review comments and final responses to comments on the weekly reports shall be included in the final MEC Survey as an appendix.

The MEC/UXO Contractor shall notify the Project Manager of the final Phase 1 weekly report and state that the construction is cleared to start. A summary table of the MEC/UXO and material potentially presenting an explosive hazard (MPPEH) discoveries and disposition shall be provided at the phase transition. A similar notification and summary table shall be provided with the final Phase 2 weekly report.

The MEC/UXO Contractor shall also prepare a draft and final After Action Report (AAR) explaining 1) all investigated and uninvestigated anomalies, 2) the location of each anomaly identified, 3) the decision criteria used to determine which anomalies were investigated, 4) the excavation depth of each investigated anomaly, 5) the results of each excavation, 6) disposition of all MEC and material potentially presenting an explosive hazard (MPPEH). The MEC/UXO Contractor shall provide written responses to all comments on the draft report and shall provide a Final report that satisfactorily addresses all comments. The review comments and final responses to comments on Certificate of MEC Clearance and the After Action Report shall be included in the each respective report as an appendix.

1.7 Criteria for Bidding
Base bids on the following criteria:

a. Surface and Subsurface Clearance requirements will be the responsibility of the MEC/UXO Contractor. This includes all aspects as described in these specifications, including, but not limited to, the surface sweep, vegetation removal, surface clearance geophysical survey and data processing/interpretation, target reacquisition, intrusive operations, soil excavation oversight, soil screening, material handling, storage and disposal, and reporting.
b. For the purposes of bidding, the MEC/UXO Contractor is to provide an estimate based on the number of anomalies per acre specified by the Contracting Officer and to include incremental costs per mapped anomaly requiring investigation based on the following metrics:

Additional Anomalies per Acre	**Incremental Cost per Anomaly**
Less than 50	
Greater than 50	

The base metric for the CMMF site is 350 anomalies per acre.

c. Mobilization on-site, including the staging of materials & equipment and the placement of temporary construction facilities on-site per Section 01 50 00 TEMPORARY CONSTRUCTION FACILITIES AND CONTROLS, cannot occur prior to Government acceptance of the Phase 1 work and issuance of a NTP.
d. Investigations, soil excavation, anomaly removal operations, and other MEC related site activities require an EZ that has the potential to impact roads and traffic, and the operations of adjacent buildings. Regarding traffic: Plan for impacts to traffic (e.g. Traffic Control Plan) and make provisions as noted above and in Section 01 50 00 TEMPORARY CONSTRUCTION FACILITIES AND CONTROLS. Regarding buildings: Plan for impacts to local residents (if any) and base activities as noted above (e.g. Community Outreach Plan); however, the Government will be responsible for coordinating directly with the occupants of buildings.
e. Soil excavation and removal operations will be interrupted by the discovery of anomalies and MEC/MPPEH items requiring the stopping of work. Estimate shall provide for one 4-hour working day interruption for each two weeks of excavation site work for MEC response activities and shall provide a unit rate for additional 4-hour working day interruptions.
f. The Government shall coordinate Community Outreach to inform local housing residents (if applicable) and base personnel regarding MEC work and any impacts to traffic and the building occupants. The Contractor shall play a supporting role to include the preparation of a Community Outreach Plan, presentations, briefing material handouts, and attendance at a maximum of 2 Community Outreach Educational Meetings of 2 hours duration each to occur at a location or locations within NBG or AAFB.

Attachment G

DRAWINGS

FY12 MCAF PROJECT SAKW059101

PRTC - REDHORSE CANTONMENT OPERATIONS FACILITY
ANDERSEN AIR FORCE BASE GUAM

INDEX OF DRAWINGS

1	OF	31	T-1	INDEX OF DRAWINGS, LOCATION MAP, VICINITY MAP, ABBREVIATIONS, REFERENCING CONVENTIONS, MATERIALS/ LEGEND & GENERAL NOTES
				CIVIL
2	OF	31	C-1	OVERALL SITE PLAN
3	OF	31	C-2	SITE LAYOUT PLAN
4	OF	31	C-3	SITE UTILTY PLAN
5	OF	31	C-4	OVERALL SITE GRADING PLAN
6	OF	31	C-5	SITE GRADING PLAN
7	OF	31	C-6	MISCELLANEOUS DETAILS
8	OF	31	C-7	MISCELLANEOUS DETAILS
9	OF	31	C-8	MISCELLANEOUS DETAILS
				ARCHITECTURAL
10	OF	31	A-1.1	OVERALL FLOOR PLAN
11	OF	31	A-1.2	FURNITURE LAYOUT
12	OF	31	A-2.1	REFLECTED CEILING PLAN
13	OF	31	A-3.1	ROOF PLAN
14	OF	31	A-4.1	EXTERIOR ELEVATIONS
15	OF	31	A-5.1	BUILDING SECTION
				STRUCTURAL
16	OF	31	S-1	STRUCTURAL NOTES
17	OF	31	S-2	FOUNDATION PLAN
18	OF	31	S-3	ROOF FRAMING PLAN
19	OF	31	S-4	SECTION & DETAILS
20	OF	31	S-5	ELEVATIONS
21	OF	31	S-5.1	ELEVATIONS
				MECHANICAL
22	OF	31	FS-1	FIRE SPRINKLER PLAN LAYOUT
23	OF	31	P-1	LEGENDS & ABBREVIATION, GENERAL NOTES AND PLUMBING FIXTURE SCHEDULE
24	OF	31	P-2	PLUMBING PLAN LAYOUT
25	OF	31	M-1	LEGEND, ABBREVIATION, GENERAL NOTES AND NOTES
26	OF	31	M-2	MECHANICAL PLAN LAYOUT
				ELECTRICAL
27	OF	31	E-1	ELECTRICAL SYMBOLS, ABBREVIATIONS, AND NOTES
28	OF	31	E-2.1	ELECTRICAL SITE PLAN
29	OF	31	E-2.2	ELECTRICAL SITE UTILITY PLAN
30	OF	31	E-3	ELECTRICAL PLAN
31	OF	31	E-4	ELECTRICAL ONE-LINE DIAGRAM

LOCATION MAP

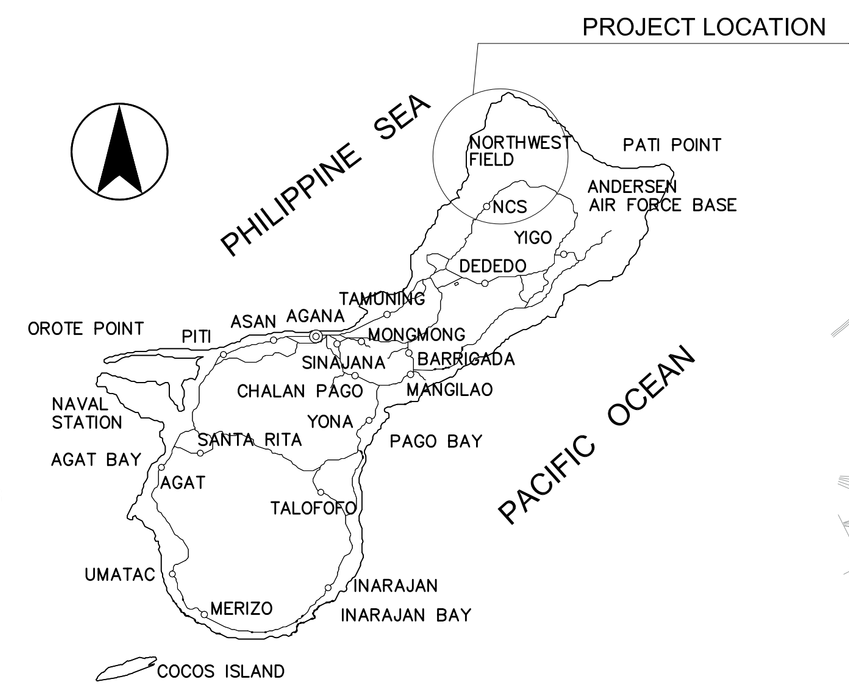

VICINITY MAP

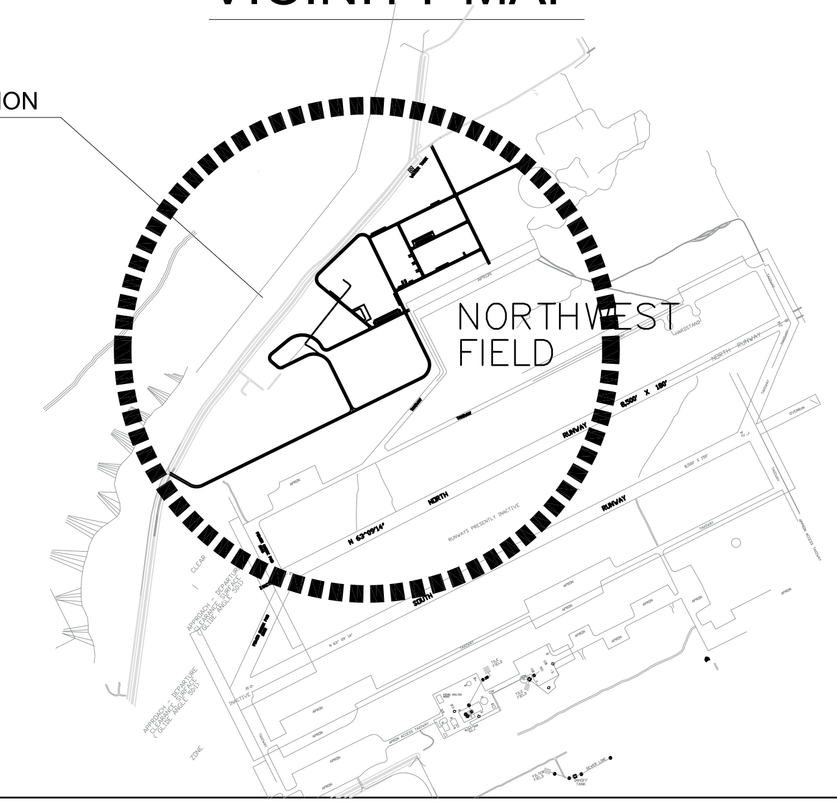

ABBREVIATIONS

AB	ANCHOR BOLT
AC	ASPHALTIC CONCRETE
A/C	AIR-CONDITIONING
ACST	ACOUSTICAL
AHR	ANCHOR
AL OR ALUM	ALUMINUM
AP	ACCESS PANEL
ARCH	ARCHITECTURAL
ASPH	ASPHALT
ATC	ACOUSTIC TILE CEILING
BD	BOARD
BITUM	BITUMINOUS
BLDG(S)	BUILDING(S)
BLKG	BLOCKING
BM	BEAM
BN	BULL-NOSE BLOCK
BOTT	BOTTOM
BRKT	BRACKET
BS	BOTH SIDES
CAB	CABINET
CJ	CONSTRUCTION JOINT
CL OR ℄	CENTER LINE
CLJ	CONTROL JOINT
CLG	CEILING
CMT	CERAMIC MOSAIC TILE
CMU	CONCRETE MASONRY UNIT
COL	COLUMN
CONC	CONCRETE
CONT	CONTINUOUS OR CONTINUE
CPL	CEMENT PLASTER
CPT	CARPET
CT	CERAMIC TILE
DET(S)	DETAIL(S)
DF	DRINKING FOUNTAIN
DIA	DIAMETER
DIAG	DIAGONAL
DIM	DIMENSION
DN	DOWN
DS	DOWNSPOUT
DWG(S)	DRAWING(S)
EA	EACH
EF	EACH FACE
EIFS	EXTERIOR INSULATION & FINISH SYSTEM
EL	ELEVATION
ELEC	ELECTRICAL
ENCL	ENCLOSURE
EPJ	EXPANSION JOINT
EQ OR EQL	EQUAL
EQPT	EQUIPMENT
EW	EACH WAY
EWC	ELECTRIC WATER COOLER
EXH	EXHAUST
EXP	EXPOSED
FACP	FIRE ALARM CONTROL PANEL
FCTY	FACTORY
FCU	FAN COIL UNIT
FD	FLOOR DRAIN
FDN	FOUNDATION
FEXT	FIRE EXTINGUISHER
FFL	FINISH FLOOR LINE
FL	FLOOR
FNSH OR FIN	FINISH
FT	FOOT
FXTR	FIXTURE
GA	GAGE
GALV	GALVANIZED
GND	GROUND
GWB	GYPSUM WALLBOARD
GWT	GLAZED WALL TILE
GYP	GYPSUM
GSF	GROSS SQUARE FOOT
GSM	GROSS SQUARE METER
HDCP	HANDICAP
HDWD	HARDWOOD
HGT	HEIGHT
HORIZ	HORIZONTAL
ID	INSIDE DIAMETER
IN	INCH
INSUL	INSULATING, INSULATOR OR INSULATION
JC	JANITOR CLOSET
JT	JOINT
KWHM	KILOWATT HOUR METER
KS	KITCHEN SINK
L	LONG OR LENGTH
LAM	LAMINATE
LAV	LAVATORY
LG	LENGTH
LTG	LIGHTING
MATL	MATERIAL
MAX	MAXIMUM
MECH	MECHANICAL
MET	METAL
MFR	MANUFACTURER
MIN	MINIMUM
MISC	MISCELLANEOUS
MO	MASONRY OPENING
MW	MICROWAVE OVEN
NA	NOT APPLICABLE
NIC	NOT IN CONTRACT
NO OR #	NUMBER
NOM	NOMINAL
NTS	NOT TO SCALE
OA	OVERALL
OC	ON CENTER
OCEW	ON CENTER EACH WAY
OCT	OCTAGON
OD	OUTSIDE DIAMETER
OPNG	OPENING
ORIG	ORIGINAL
OVHD	OVERHEAD
PC	PILE CAP, PRECAST, CONCRETE OR PRESTRESSED CONCRETE
PEJ	PREMOLDED EXPANSION JOINT
PL OR >	PLATE
PLYWD	PLYWOOD
PNL	PANEL
PTD	PAPER TOWEL DISPENSER
PTN	PARTITION
QTY	QUANTITY
QUAL	QUALITY
RAD	RADIUS
RB	ROOF BEAM OR RUBBER BASE
RC	REINFORCED CONCRETE
RD	ROOF DRAIN OR ROAD
RECT	RECTANGULAR
REF	REFRIGERATOR
REINF	REINFORCE OR REINFORCEMENT
REQD	REQUIRED
RH	ROBE HOOK
RM	ROOM
RO	ROUGH OPENING
RSD	ROLLING STEEL DOOR
RVT	RIVET
SB	SPLASH BLOCK OR SHOWER BENCH
SC	SHOWER CURTAIN
SF OR SQ FT	SQUARE FEET
SH	SHOWER HEAD
SHR	SHOWER
SHT OR SH	SHEET
SIM	SIMILAR
SM	SQUARE METER
SPEC(S)	SPECIFICATION(S)
SQ	SQUARE
SS	SERVICE SINK
SST	STAINLESS STEEL
STD	STANDARD
STL	STEEL
STRL OR STRUC	STRUCTURAL
SUSP	SUSPENDED
SYMM	SYMMETRICAL
TB	TOWEL BAR
TEL	TELEPHONE
TEMP	TEMPORARY OR TEMPERATURE
THK	THICK
THRU	THROUGH
TTD	TOILET TISSUE DISPENSER
TV	TELEVISION
TYP	TYPICAL
UNIF	UNIFORM
UR	URINAL
VAR	VARIABLE OR VARIES
VB	VAPOR BARRIER
VCT	VINYL COMPOSITION TILE
VENT	VENTILATOR
VERT	VERTICAL
WC	WATER CLOSET
WD	WIDTH, WOOD OR WOOD DOOR
WDO	WINDOW
WF	WALL FOOTING
W/	WITH
W/O	WITHOUT
WP	WORK POINT
WPG	WATER PROOFING
WWF	WELDED WIRE FABRIC

REFERENCING CONVENTIONS

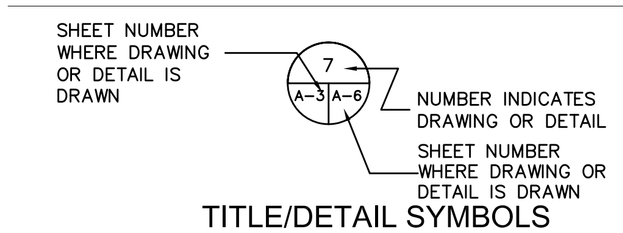

TITLE/DETAIL SYMBOLS

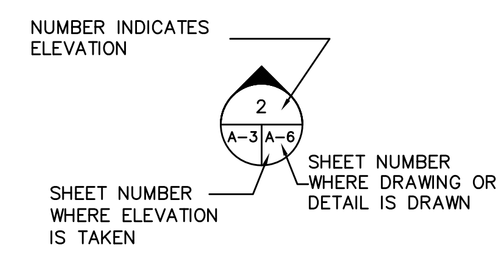

ELEVATION

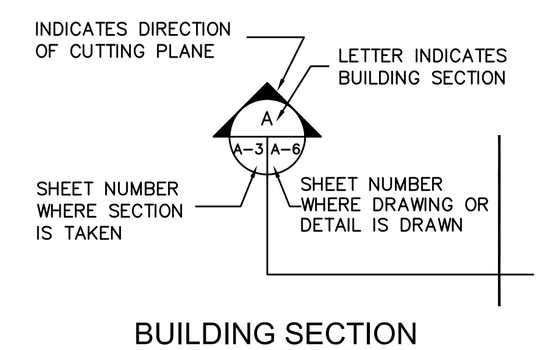

BUILDING SECTION

MATERIALS/LEGEND

- REINFORCED CONCRETE EXTERIOR WALL
- INTERIOR WALL LINING (WHERE OCCUR)
- REINFORCED CONCRETE INTERIOR WALL
- CMU INTERIOR WALL
- GWB DRYWALL INTERIOR WALL
- ONE-HOUR FIRE-RATED WALL
- REINFORCED CONCRETE COLUMNS
- ALUMINUM FRAMED SLIDING GLASS WINDOW WITH ALUMINUM SCREEN AND TYPHOON SHUTTER
- EXTERIOR OR INTERIOR DOORS
- ACOUSTICAL OR THERMAL INSULATION
- EARTH
- GRAVEL
- A.C. PAVEMENT
- CONCRETE WALKWAY
- PROPOSED BUILDING
- FUTURE BUILDING
- EXISTING BUILDING

GENERAL NOTES:

1. BUILDING DIMENSIONS ARE INDICATED IN MILLIMETERS WITH EQUIVALENT ENGLISH [FEET-INCHES] DIMENSIONS SHOWN IN BRACKETS BELOW.

FINAL RFP SUBMITTAL

GRAPHIC SCALE:

THE CONTRACTOR SHALL BE RESPONSIBLE FOR COORDINATING THE WORK AMONG THE VARIOUS TRADES AS NECESSARY TO AVOID CONFLICTS AND TO INSURE THE INSTALLATION OF ALL WORK WITHIN THE AVAILABLE SPACE.

SYM.	DESCRIPTION	DATE	APPR

N.C. MACARIO & ASSOCIATES, INC.
P.O. Box 784 Agana, Guam 96910
Tel. 646-0947/48 Fax: 646-0901
Email: ncma@guam.net

SEAL

SUBMITTED BY
N.C. MACARIO & ASSOCIATES, INC.
FIRM MEMBER
NCM DATE ------
APPROVED
ACTIVITY - SATISFACTORY TO DATE
APPROVED
FOR COMMANDER NAVFAC PACIFIC DATE

DES	DR
CHK	QC
CH ENG	

REVIEWED BY
PDE
INIT. BRANCH MANAGER
FIRE PROTECTION
BRANCH MANAGER
DESIGN DIRECTOR

NAVAL FACILITIES ENGINEERING COMMAND
NAVFAC MARIANAS
SUMAY, GUAM

TITLE/LOCATION: FY12 MCAF PROJECT SAKW059101
PRTC - REDHORSE CANTONMENT OPERATIONS FACILITY,
ANDERSEN AIR FORCE BASE GUAM

SHEET CONTENT: REFERENCING CONVENTIONS, MATERIAL/LEGEND & GENERAL NOTES INDEX OF DRAWINGS, LOCATION MAP, VICINITY MAP, ABBREVIATIONS,

CODE ID. NO. 80091 SIZE D
SCALE: AS SHOWN
CONST. CONTR. NO. 000000-00-0-0000
SPEC. NO. 00-00-0000
NAVFAC DRAWING NO.
SHEET 1 OF 31
T-1

DRAWFORM REVISION JUL 2009

LEGEND:

EXISTING	NEW	
		STRUCTURE
		CONCRETE WALKWAY
		BITUMINOUS PAVEMENT
		GRAVEL FILL (4" MIN.)
		CONCRETE CURB
		PROPERTY LINE
		REGULATORY SIGN
S_4	S_8	SEWER LINE (NO. INDICATES SIZE OF PIPE IN INCHES)
W_1	W_8	WATER LINE (NO. INDICATES SIZE OF PIPE IN INCHES)
		TELEPHONE BOX
S	SSMH	SEWER MANHOLE
W	W	WATER MANHOLE
		GRASS LINED BIO SWALE
		CHAIN LINK SECURITY FENCE

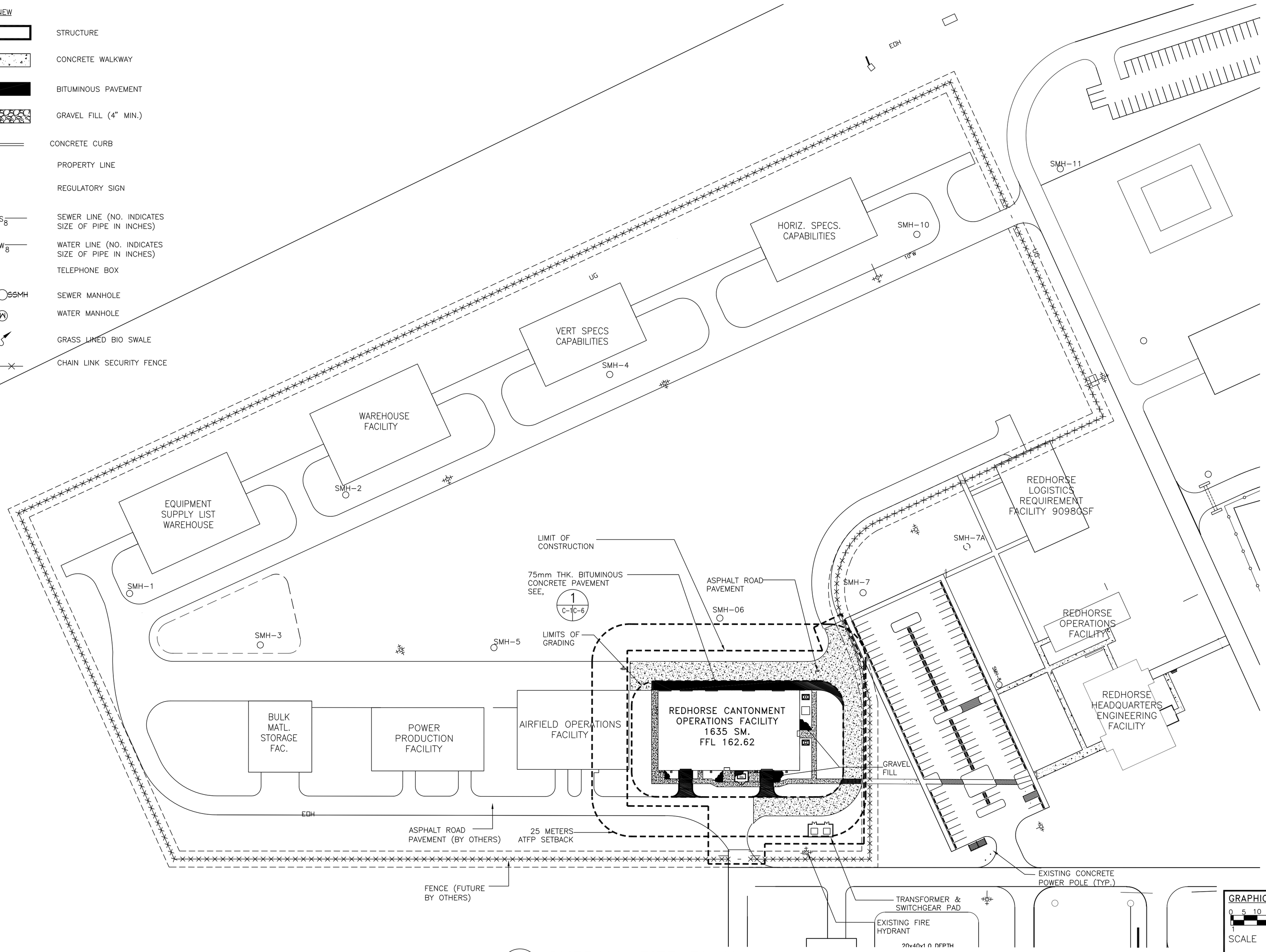

A C-1 C-1 OVERALL SITE PLAN
SCALE: 1:750 M

FINAL RFP SUBMITTAL

GRAPHIC SCALE:
0 5 10 15 20 30 40 50
SCALE METERS
1:750 M

THE CONTRACTOR SHALL BE RESPONSIBLE FOR COORDINATING THE WORK AMONG THE VARIOUS TRADES AS NECESSARY TO AVOID CONFLICTS AND TO INSURE THE INSTALLATION OF ALL WORK WITHIN THE AVAILABLE SPACE.

SYM.	DESCRIPTION	DATE	APPR

N.C. MACARIO & ASSOCIATES, INC.
P.O. Box 784 Agana, Guam 96910
Tel. 646-0947/48 Fax: 646-0901
Email: ncma@guam.net

SEAL

SUBMITTED BY
N.C. MACARIO & ASSOCIATES, INC.

FIRM MEMBER
NCM DATE ------

APPROVED

ACTIVITY - SATISFACTORY TO DATE

APPROVED

FOR COMMANDER NAVFAC PACIFIC DATE

DES | DR
CHK | QC
CH ENG
REVIEWED BY
PDE
INIT. BRANCH MANAGER
FIRE PROTECTION
BRANCH MANAGER
DESIGN DIRECTOR

NAVAL FACILITIES ENGINEERING COMMAND
NAVFAC MARIANAS
SUMAY, GUAM

TITLE/LOCATION:
FY12 MCAF PROJECT SAKW059101
PRTC - REDHORSE CANTONMENT OPERATIONS FACILITY,
ANDERSEN AIR FORCE BASE GUAM

SHEET CONTENT:
OVERALL SITE PLAN

CODE ID. NO. 80091 | SIZE D
SCALE: AS SHOWN
CONST. CONTR. NO.
000000-00-0-0000
SPEC. NO. 00-00-0000
NAVFAC DRAWING NO.

SHEET 2 OF 31

C-1

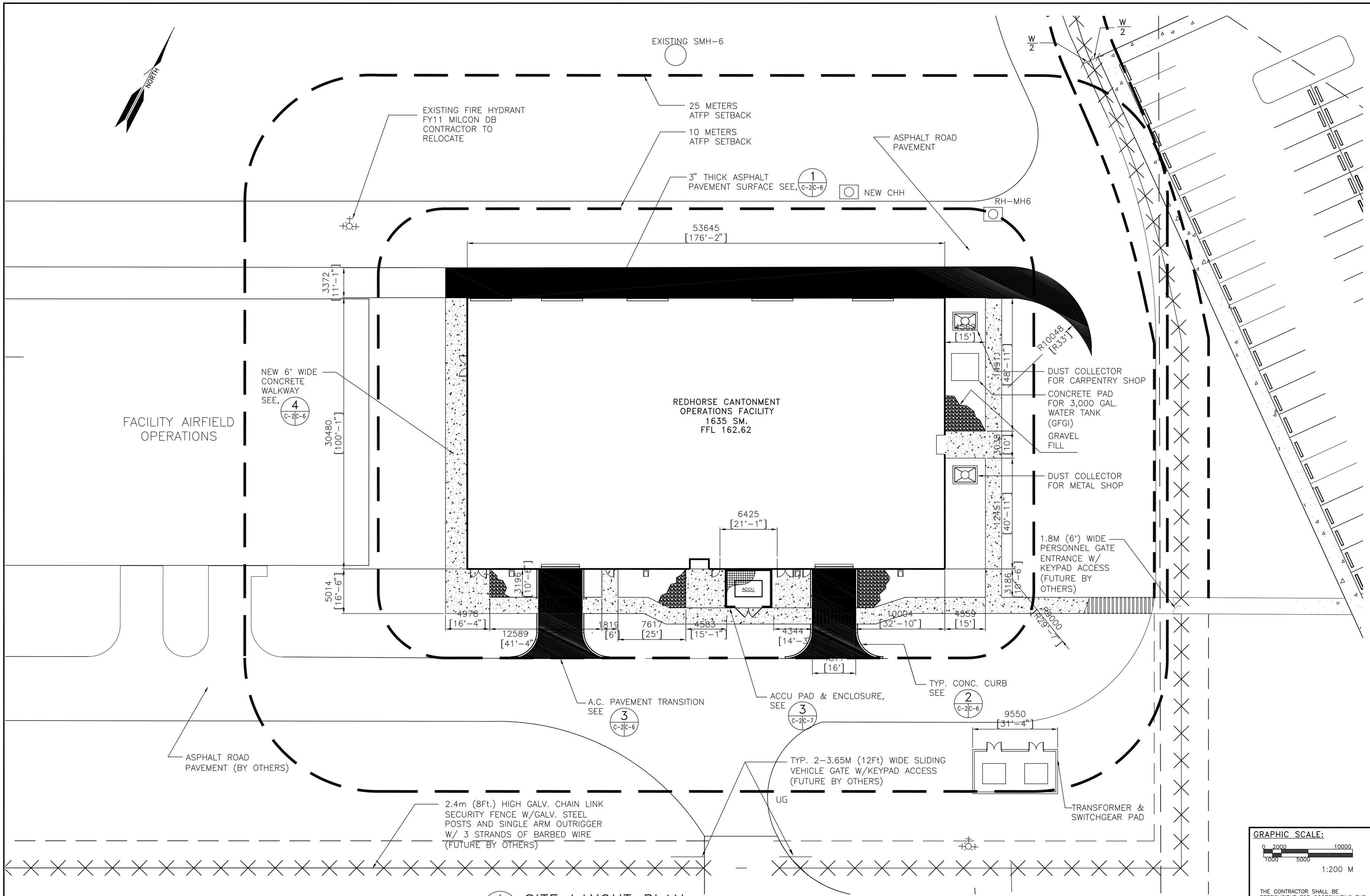

A C-2|C-2 SITE LAYOUT PLAN
SCALE: 1:200 M

FINAL RFP SUBMITTAL

GRAPHIC SCALE:
0 2000 10000
1000 5000
1:200 M

THE CONTRACTOR SHALL BE RESPONSIBLE FOR COORDINATING THE WORK AMONG THE VARIOUS TRADES AS NECESSARY TO AVOID CONFLICTS AND TO INSURE THE INSTALLATION OF ALL WORK WITHIN THE AVAILABLE SPACE.

SYM.	DESCRIPTION	DATE	APPR

N.C. MACARIO & ASSOCIATES, INC.
P.O. Box 784 Agana, Guam 96910
Tel. 646-0947/48 Fax: 646-0901
Email: ncma@guam.net

SEAL

SUBMITTED BY
N.C. MACARIO & ASSOCIATES, INC.
FRM MEMBER
NCM DATE ------
APPROVED
ACTMTY - SATISFACTORY TO
DATE
APPROVED
FOR COMMANDER NAVFAC PACIFIC
DATE
DES DR
CHK QC
CH ENG
REVIEWED BY
PDE
INIT. BRANCH MANAGER
FIRE PROTECTION
BRANCH MANAGER
DESIGN DIRECTOR

NAVAL FACILITIES ENGINEERING COMMAND
NAVFAC MARIANAS
SUMAY, GUAM

TITLE/LOCATION:
FY12 MCAF PROJECT SAKW059101
PRTC - REDHORSE CANTONMENT OPERATIONS FACILITY,
ANDERSEN AIR FORCE BASE GUAM

SHEET CONTENT:
SITE LAYOUT PLAN

CODE ID. NO. 80091 SIZE D
SCALE: AS SHOWN
CONST. CONTR. NO.
000000-00-0-0000
SPEC. NO. 00-00-0000
NAVFAC DRAWING NO.
SHEET 3 OF 31
C-2

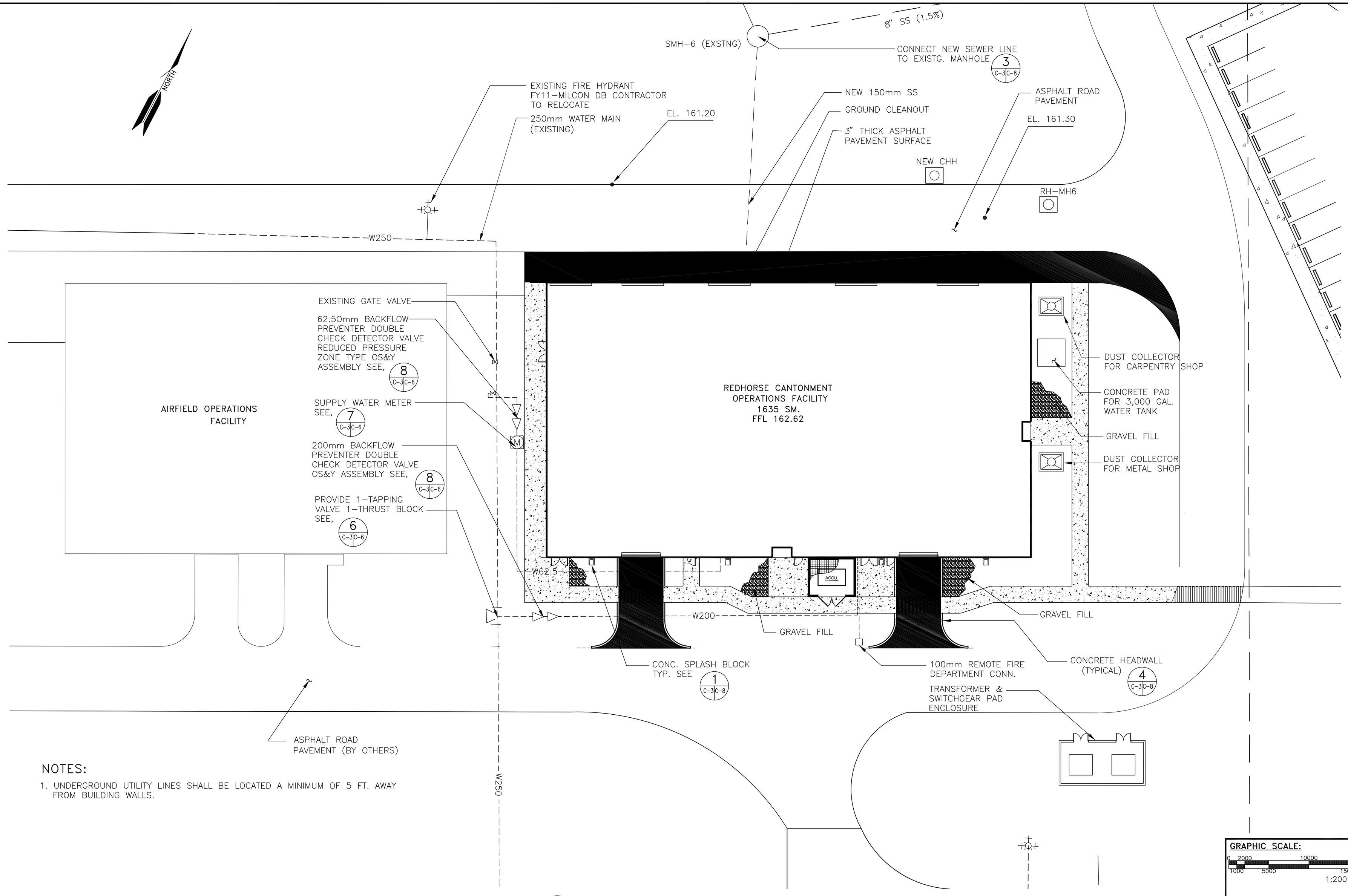

NOTES:

1. UNDERGROUND UTILITY LINES SHALL BE LOCATED A MINIMUM OF 5 FT. AWAY FROM BUILDING WALLS.

A C-3|C-3 SITE UTILITY PLAN
SCALE: 1:200 M

FINAL RFP SUBMITTAL

GRAPHIC SCALE:
0 2000 10000
1000 5000 15000
1:200 M

THE CONTRACTOR SHALL BE RESPONSIBLE FOR COORDINATING THE WORK AMONG THE VARIOUS TRADES AS NECESSARY TO AVOID CONFLICTS AND TO INSURE THE INSTALLATION OF ALL WORK WITHIN THE AVAILABLE SPACE.

SYM.	DESCRIPTION	DATE	APPR

N.C. MACARIO & ASSOCIATES, INC.
P.O. Box 784 Agana, Guam 96910
Tel. 646-0947/48 Fax: 646-0901
Email: ncma@guam.net

SEAL

SUBMITTED BY
N.C. MACARIO & ASSOCIATES, INC.

FRM MEMBER
NCM DATE ------

APPROVED

ACTMTY - SATISFACTORY TO DATE

APPROVED

FOR COMMANDER NAVFAC PACIFIC DATE

DES	DR
CHK	QC
CH ENG	
REVIEWED BY	
PDE	
INIT. BRANCH MANAGER	
FIRE PROTECTION	
BRANCH MANAGER	
DESIGN DIRECTOR	

NAVAL FACILITIES ENGINEERING COMMAND
NAVFAC MARIANAS
SUMAY, GUAM

TITLE/LOCATION: FY12 MCAF PROJECT SAKW059101
PRTC - REDHORSE CANTONMENT OPERATIONS FACILITY,
ANDERSEN AIR FORCE BASE GUAM

SHEET CONTENT: SITE UTILITY PLAN

CODE ID. NO. 80091 SIZE D
SCALE: AS SHOWN
CONST. CONTR. NO. 000000-00-0-0000
SPEC. NO. 00-00-0000
NAVFAC DRAWING NO.
SHEET 4 OF 31
C-3

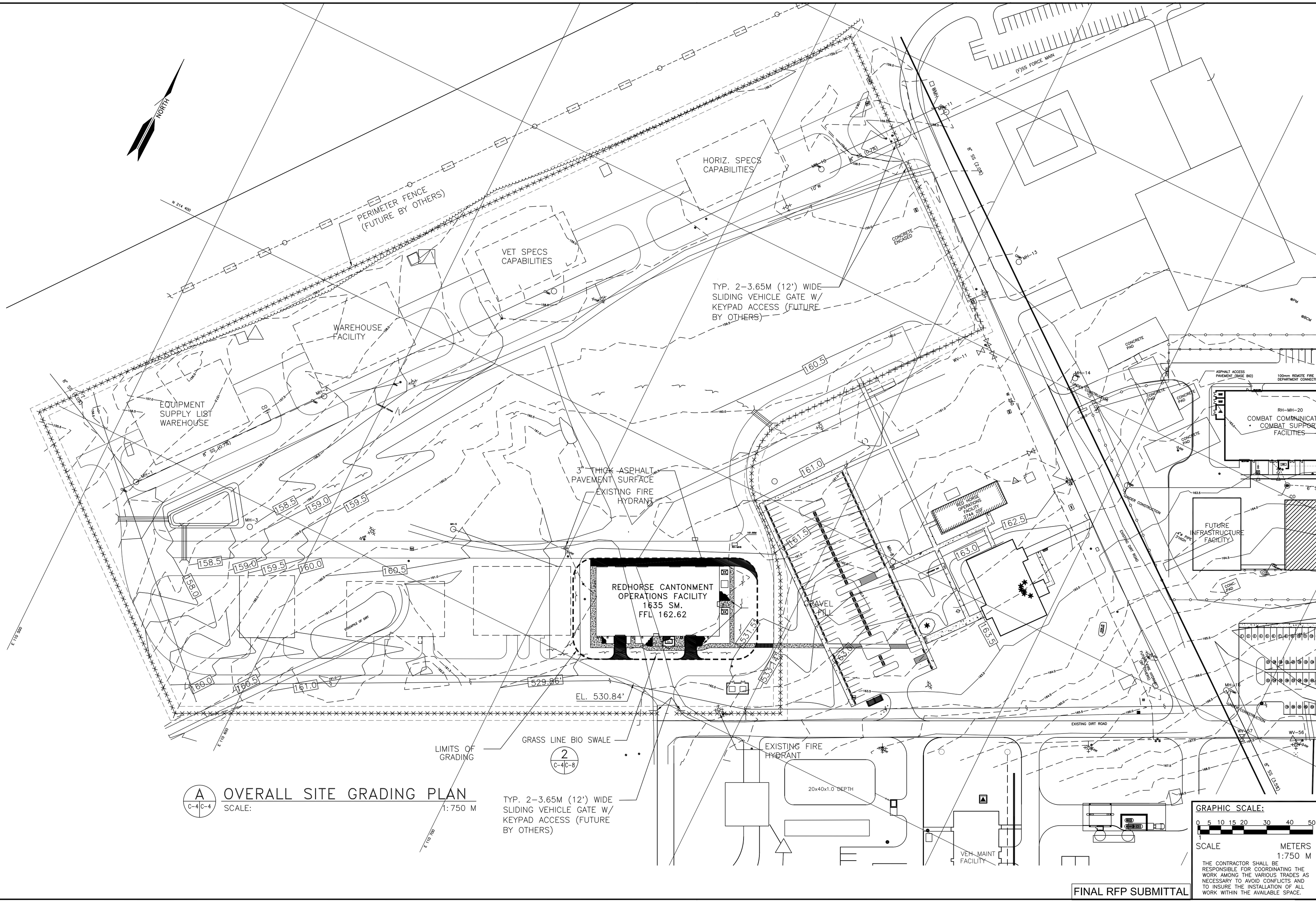

A C-4 C-4 OVERALL SITE GRADING PLAN

SCALE: 1:750 M

2 C-4 C-8

GRAPHIC SCALE:

0 5 10 15 20 30 40 50

SCALE 1:750 M METERS

THE CONTRACTOR SHALL BE RESPONSIBLE FOR COORDINATING THE WORK AMONG THE VARIOUS TRADES AS NECESSARY TO AVOID CONFLICTS AND TO INSURE THE INSTALLATION OF ALL WORK WITHIN THE AVAILABLE SPACE.

FINAL RFP SUBMITTAL

SYM.	DESCRIPTION	DATE	APPR

N.C. MACARIO & ASSOCIATES, INC.
P.O. Box 784 Agana, Guam 96910
Tel. 646-0947/48 Fax: 646-0901
Email: ncma@guam.net

SEAL

SUBMITTED BY
N.C. MACARIO & ASSOCIATES, INC.

FIRM MEMBER
NCM DATE

APPROVED

ACTIVITY - SATISFACTORY TO
DATE

APPROVED

FOR COMMANDER NAVFAC PACIFIC
DATE

DES	DR
CHK	QC
CH ENG	
REVIEWED BY	
PDE	
INIT. BRANCH MANAGER	
FIRE PROTECTION	
BRANCH MANAGER	
DESIGN DIRECTOR	

NAVAL FACILITIES ENGINEERING COMMAND
NAVFAC MARIANAS
SUMAY, GUAM

TITLE/LOCATION:
FY12 MCAF PROJECT SAKW059101
PRTC - REDHORSE CANTONMENT OPERATIONS FACILITY,
ANDERSEN AIR FORCE BASE GUAM

SHEET CONTENT: OVERALL SITE GRADING PLAN

CODE ID. NO. 80091	SIZE D
SCALE: AS SHOWN	
CONST. CONTR. NO. 000000-00-0-0000	
SPEC. NO. 00-00-0000	
NAVFAC DRAWING NO.	
SHEET 5 OF 31	

C-4

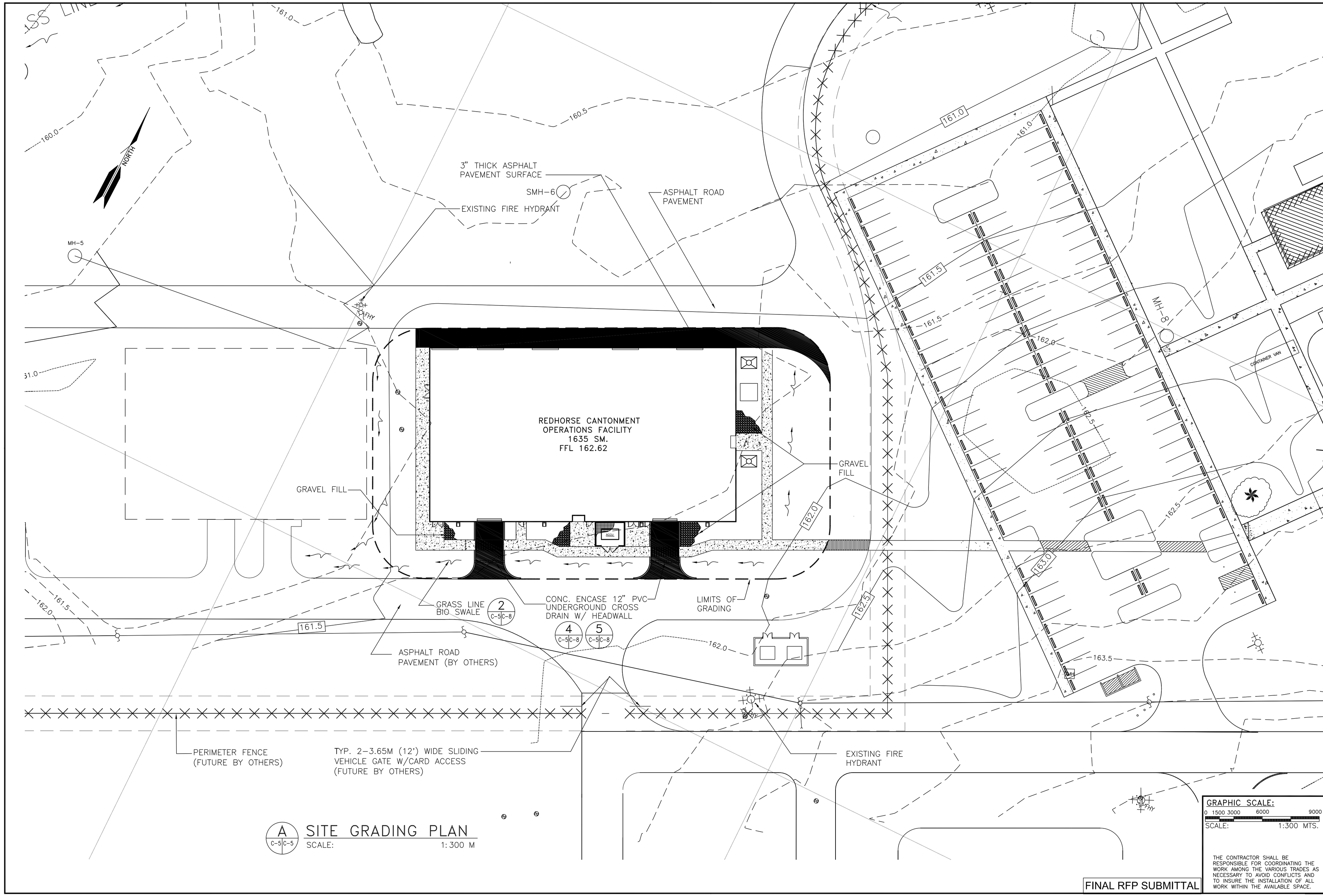

A C-5 C-5 SITE GRADING PLAN
SCALE: 1:300 M

FINAL RFP SUBMITTAL

GRAPHIC SCALE:
0 1500 3000 6000 9000
SCALE: 1:300 MTS.

THE CONTRACTOR SHALL BE RESPONSIBLE FOR COORDINATING THE WORK AMONG THE VARIOUS TRADES AS NECESSARY TO AVOID CONFLICTS AND TO INSURE THE INSTALLATION OF ALL WORK WITHIN THE AVAILABLE SPACE.

SYM.	DESCRIPTION	DATE	APPR

N.C. MACARIO & ASSOCIATES, INC.
P.O. Box 784 Agana, Guam 96910
Tel. 646-0947/48 Fax: 646-0901
Email: ncma@guam.net

SEAL

SUBMITTED BY
N.C. MACARIO & ASSOCIATES, INC.

FIRM MEMBER
NCM DATE

APPROVED

ACTMTY - SATISFACTORY TO DATE

APPROVED

FOR COMMANDER NAVFAC PACIFIC DATE

DES	DR
CHK	QC
CH ENG	
REVIEWED BY	
PDE	
INIT. BRANCH MANAGER	
FIRE PROTECTION	
BRANCH MANAGER	
DESIGN DIRECTOR	

NAVAL FACILITIES ENGINEERING COMMAND
NAVFAC MARIANAS
SUMAY, GUAM

TITLE/LOCATION:
FY12 MCAF PROJECT SAKW059101
PRTC - REDHORSE CANTONMENT OPERATIONS FACILITY,
ANDERSEN AIR FORCE BASE GUAM

SHEET CONTENT:
SITE GRADING PLAN

CODE ID. NO. 80091 SIZE D
SCALE: AS SHOWN
CONST. CONTR. NO.
000000-00-0-0000
SPEC. NO. 00-00-0000
NAVFAC DRAWING NO.

SHEET 6 OF 31
C-5

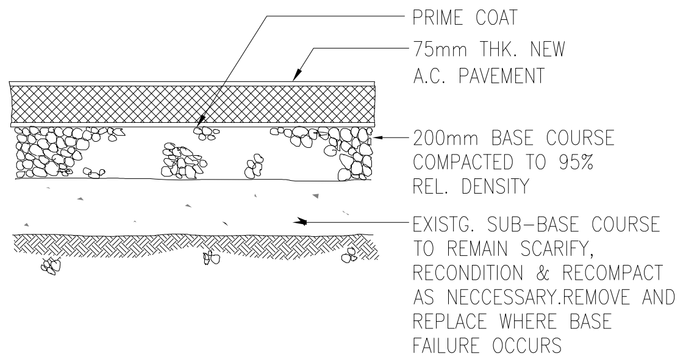

1 C-1,C-2 C-6 TYP. A. C. PAVEMENT DETAIL
SCALE: NTS

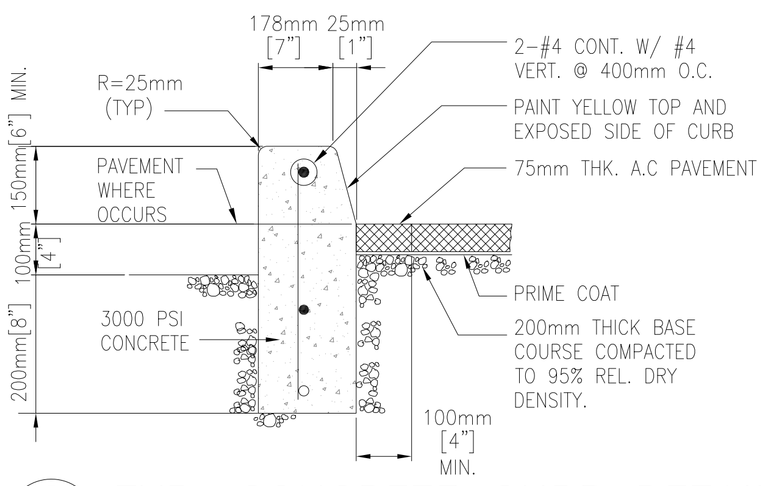

2 C-2 C-6 TYP. CONCRETE CURB DETAIL
SCALE: NTS

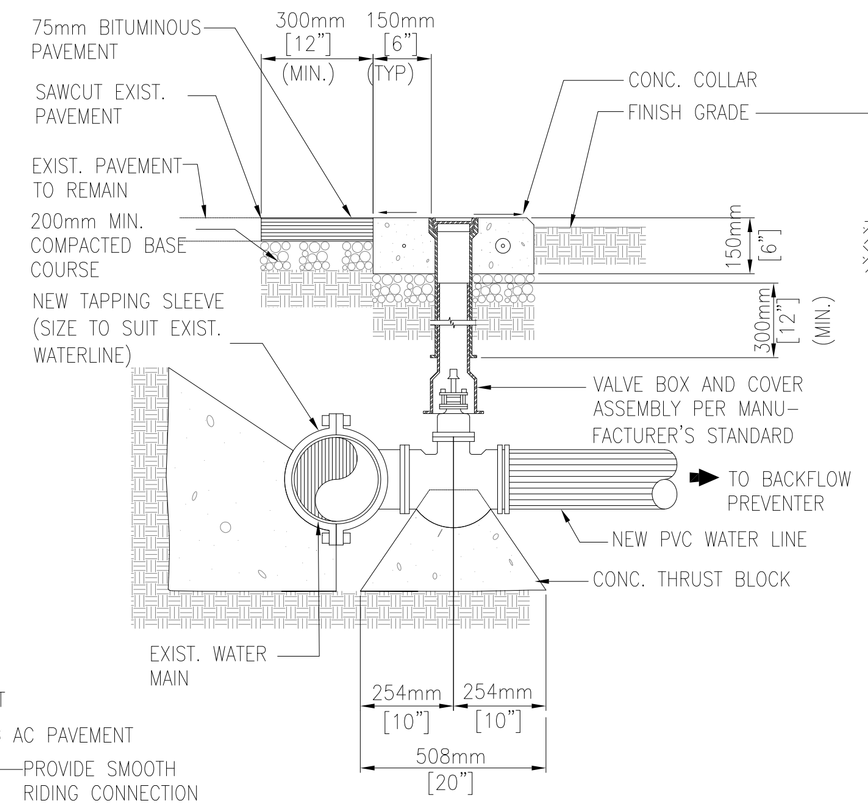

6 C-3 C-6 TAPPING VALVE DETAIL
SCALE: NTS

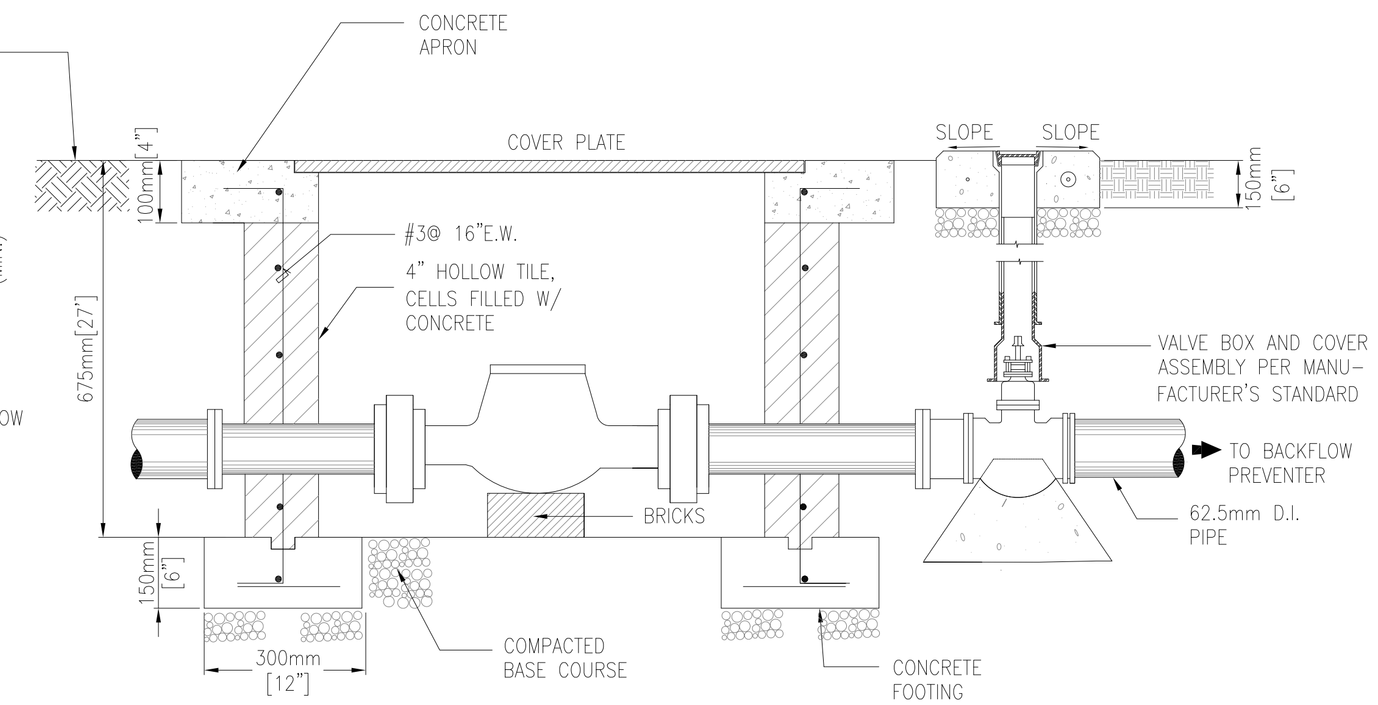

7 C-3 C-6 WATER METER DETAIL
SCALE: NTS

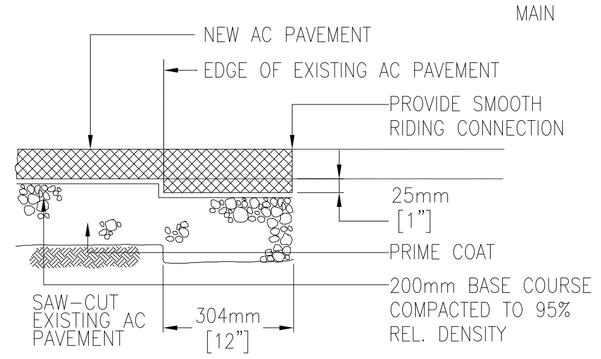

3 C-2 C-6 TYP.A.C. TRANSITION DETAIL
SCALE: NTS

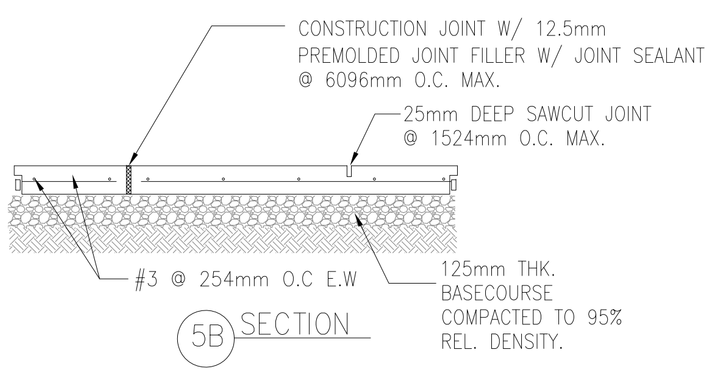

5B SECTION

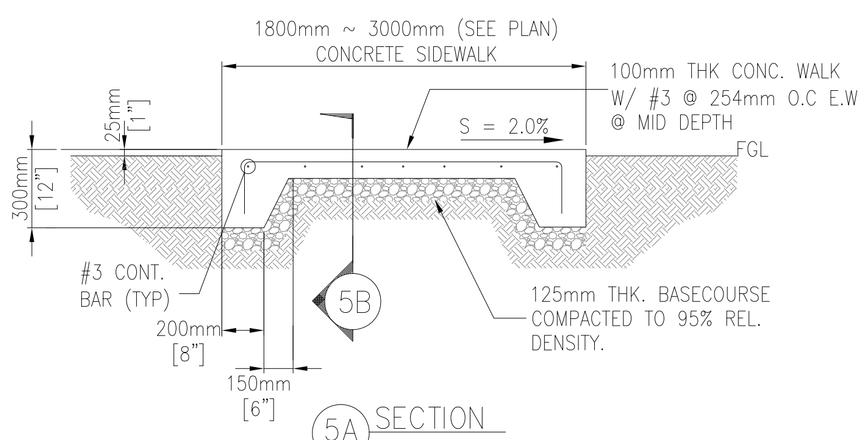

5A SECTION

4 C-1,C-2 C-6 CONCRETE WALKWAY JOINT DET.
SCALE: NTS

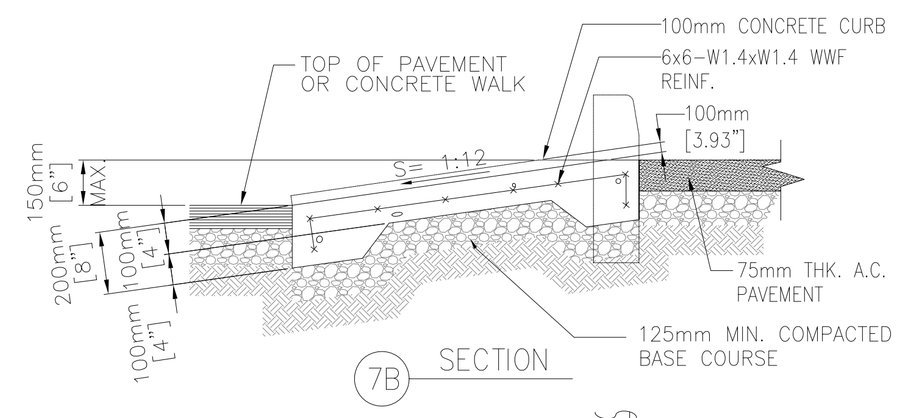

7B SECTION

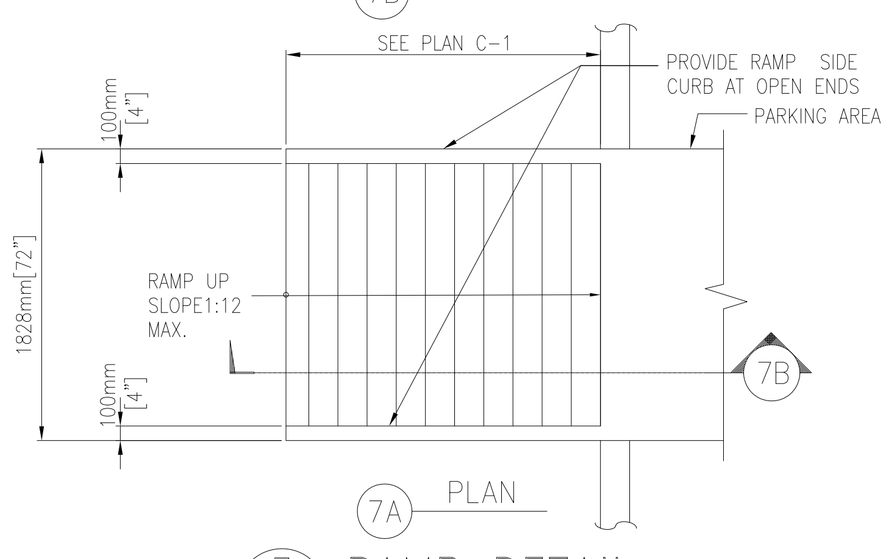

7A PLAN

5 C-6 C-6 RAMP DETAIL
SCALE: NTS

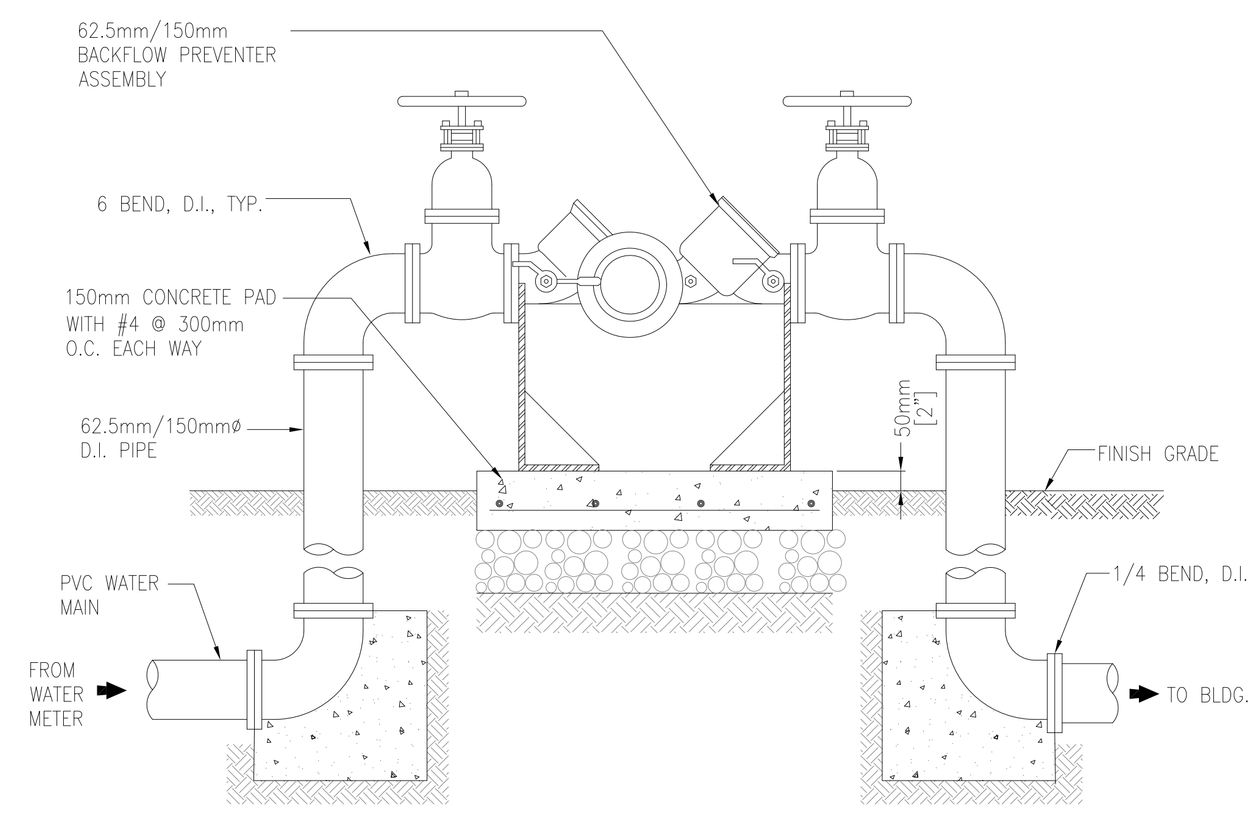

NOTE: FOR DOMESTIC LINE BACKFLOW PREVENTER SHALL BE REDUCE PRESSURE ZONE ASSEMBLY

8 C-3 C-6 BACKFLOW PREVENTER DETAIL
SCALE: NTS

FINAL RFP SUBMITTAL

GRAPHIC SCALE:

THE CONTRACTOR SHALL BE RESPONSIBLE FOR COORDINATING THE WORK AMONG THE VARIOUS TRADES AS NECESSARY TO AVOID CONFLICTS AND TO INSURE THE INSTALLATION OF ALL WORK WITHIN THE AVAILABLE SPACE.

SYM.	DESCRIPTION	DATE	APPR.

N.C. MACARIO & ASSOCIATES, INC.
P.O. Box 784 Agana, Guam 96910
Tel. 646-0947/48 Fax: 646-0901
Email: ncma@guam.net

SEAL

SUBMITTED BY
N.C. MACARIO & ASSOCIATES, INC.
FIRM NEMBER
NCM DATE
APPROVED
ACTIVITY - SATISFACTORY TO DATE
APPROVED
FOR COMMANDER NAVFAC PACIFIC DATE
DES DR
CHK QC
CH ENG
REVIEWED BY
PDE
INIT. BRANCH MANAGER
FIRE PROTECTION
BRANCH MANAGER
DESIGN DIRECTOR

NAVAL FACILITIES ENGINEERING COMMAND
NAVFAC MARIANAS
SUMAY, GUAM

TITLE/LOCATION:
FY12 MCAF PROJECT SAKW059101
PRTC - REDHORSE CANTONMENT OPERATIONS FACILITY,
ANDERSEN AIR FORCE BASE GUAM

SHEET CONTENT:
MISCELLANEOUS DETAILS

CODE ID. NO. 80091 SIZE D
SCALE: AS SHOWN
CONST. CONTR. NO.
000000-00-0-0000
SPEC. NO. 00-00-0000
NAVFAC DRAWING NO.

SHEET 7 OF 31
C-6

DRAWFORM REVISION JUL 2009

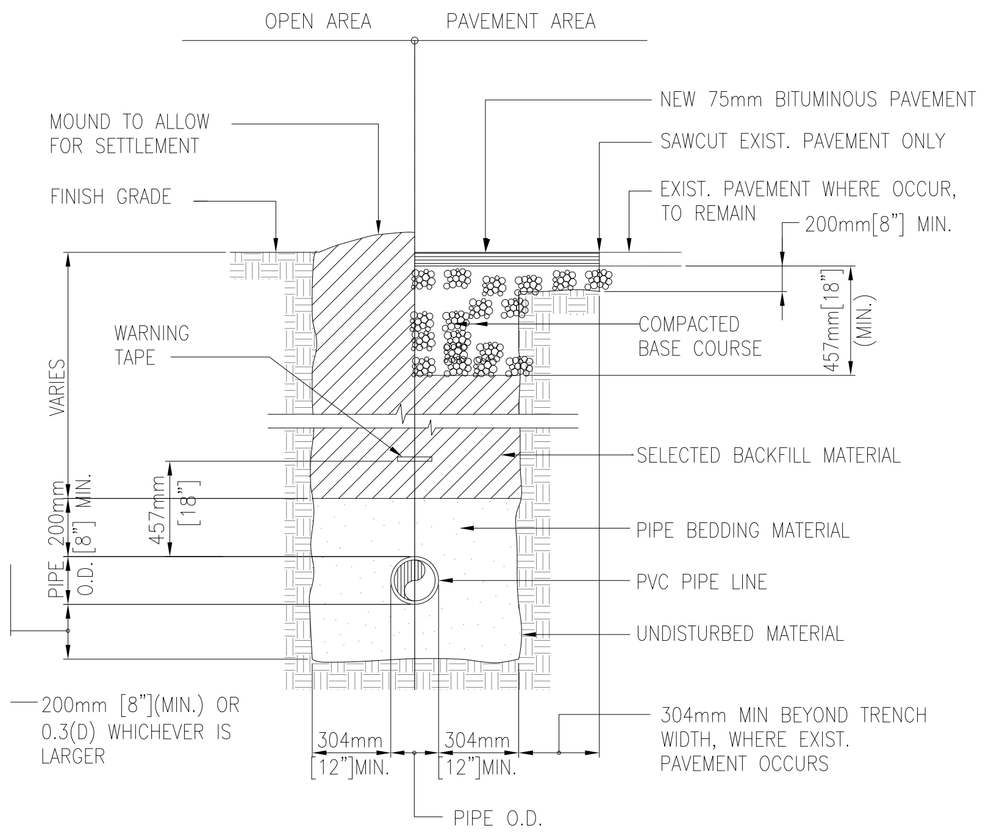

1 C-7|C-7 TYPICAL TRENCH DETAIL
SCALE: NTS

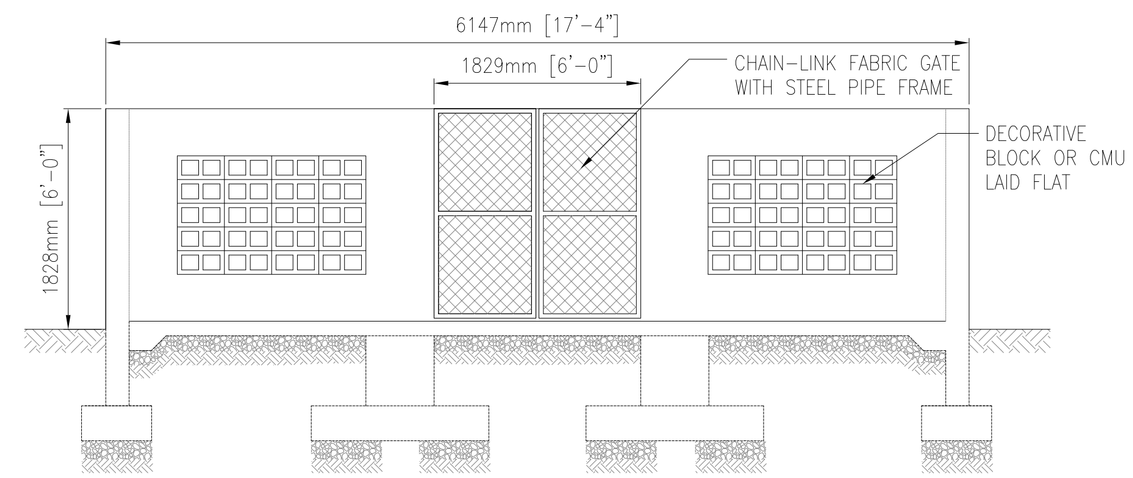

3A ELEVATION

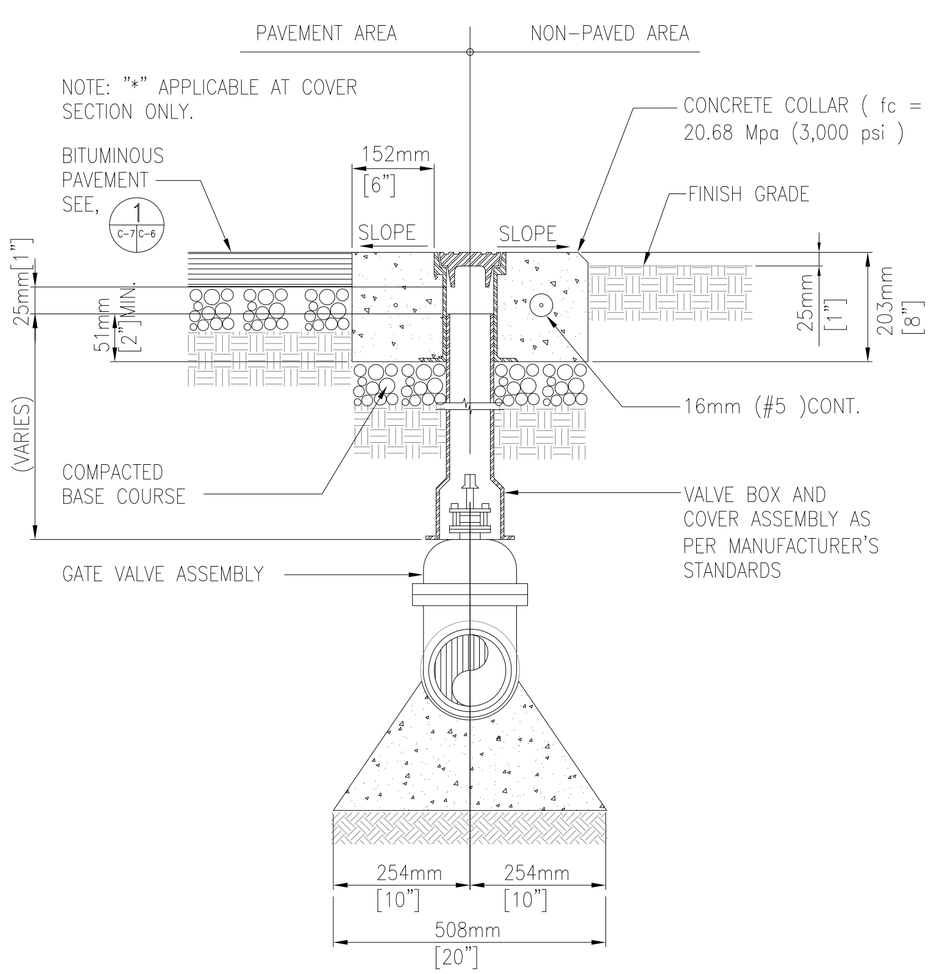

2 C-3|C-7 GATE VALVE DETAIL
SCALE: NTS

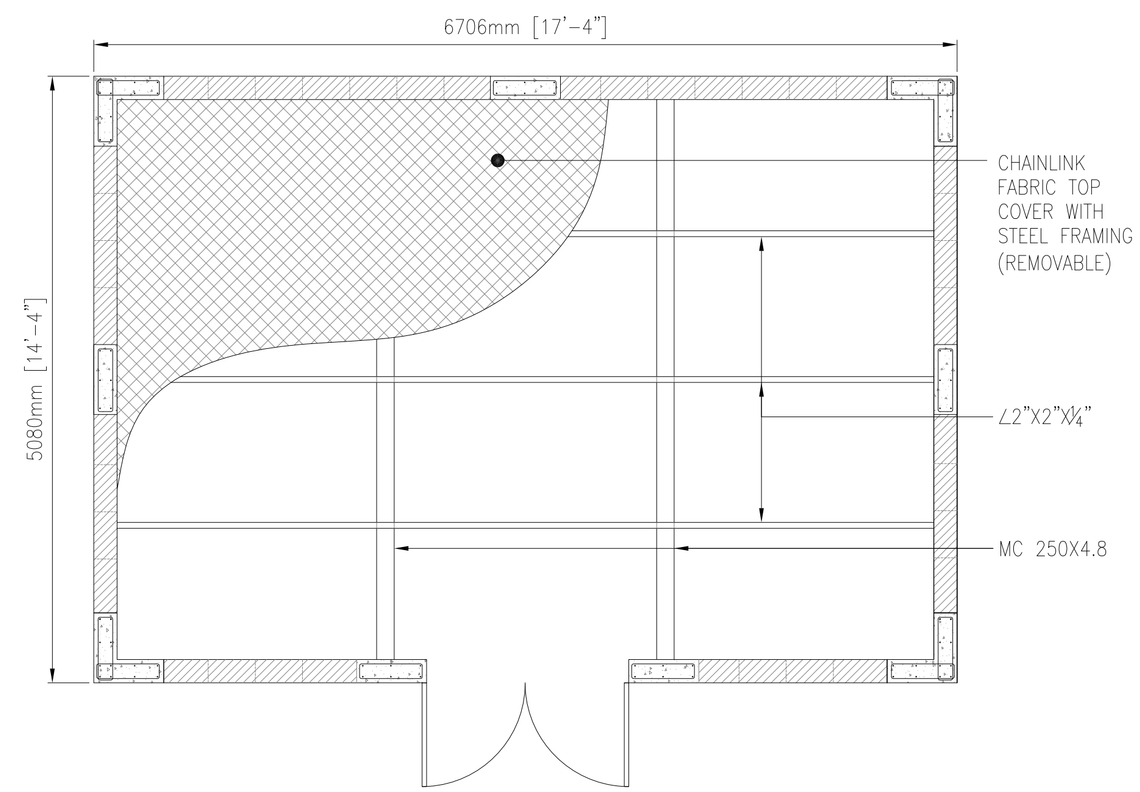

3B PLAN

3 C-2|C-7 MECH/EQUIPMENT ENCLOSURE
SCALE: NTS

FINAL RFP SUBMITTAL

GRAPHIC SCALE:

THE CONTRACTOR SHALL BE RESPONSIBLE FOR COORDINATING THE WORK AMONG THE VARIOUS TRADES AS NECESSARY TO AVOID CONFLICTS AND TO INSURE THE INSTALLATION OF ALL WORK WITHIN THE AVAILABLE SPACE.

SYM.	DESCRIPTION	DATE	APPR.

N.C. MACARIO & ASSOCIATES, INC.
P.O. Box 784 Agana, Guam 96910
Tel. 646-0947/48 Fax: 646-0901
Email: ncma@guam.net

SEAL

SUBMITTED BY
N.C. MACARIO & ASSOCIATES, INC.
FIRM NEMBER
NCM DATE – – – – – –
APPROVED
ACTIVITY - SATISFACTORY TO DATE
APPROVED
FOR COMMANDER NAVFAC PACIFIC DATE
DES DR
CHK QC
CH ENG
REVIEWED BY
PDE
INIT. BRANCH MANAGER
FIRE PROTECTION
BRANCH MANAGER
DESIGN DIRECTOR

NAVAL FACILITIES ENGINEERING COMMAND
NAVFAC MARIANAS
SUMAY, GUAM

TITLE/LOCATION: FY12 MCAF PROJECT SAKW059101
PRTC – REDHORSE CANTONMENT OPERATIONS FACILITY,
ANDERSEN AIR FORCE BASE GUAM

SHEET CONTENT: MISCELLANEOUS DETAILS

CODE ID. NO. 80091 SIZE D
SCALE: AS SHOWN
CONST. CONTR. NO. 000000-00-0-0000
SPEC. NO. 00-00-0000
NAVFAC DRAWING NO.
SHEET 8 OF 31
C-7

DRAWFORM REVISION JUL 2009

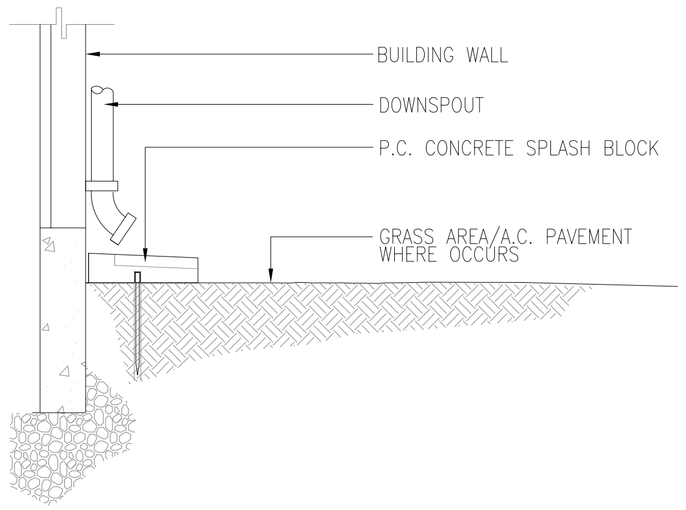

1 C-3 C-8 SPLASH BLOCK DETAIL
SCALE: NTS

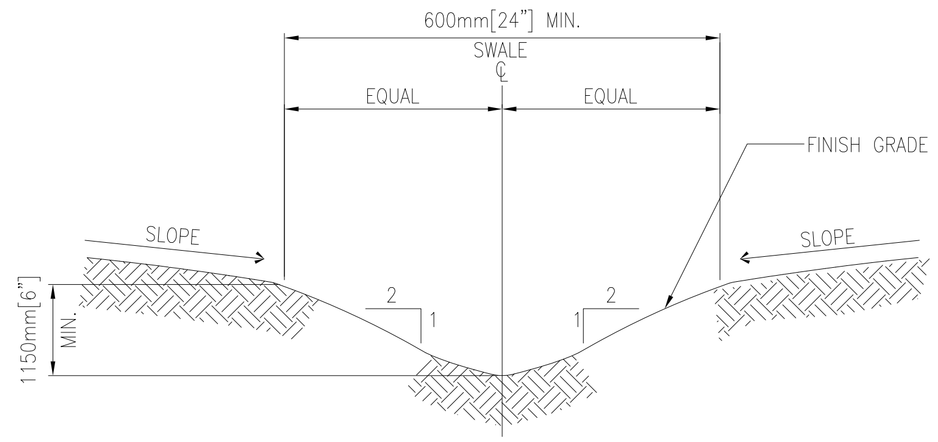

2 C-4, C-5 C-8 GRASS LINED BIO-SWALE DETAIL
SCALE: NTS

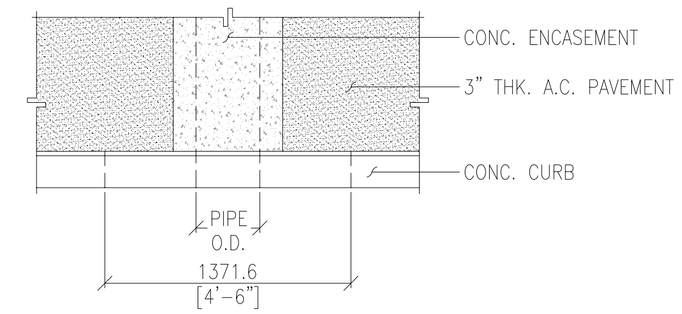

4A PLAN

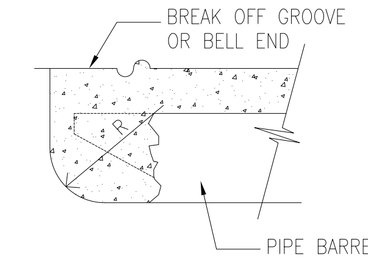

4D ROUNDED ENTRANCE
(UPSTREAM HEADWALLS ONLY)

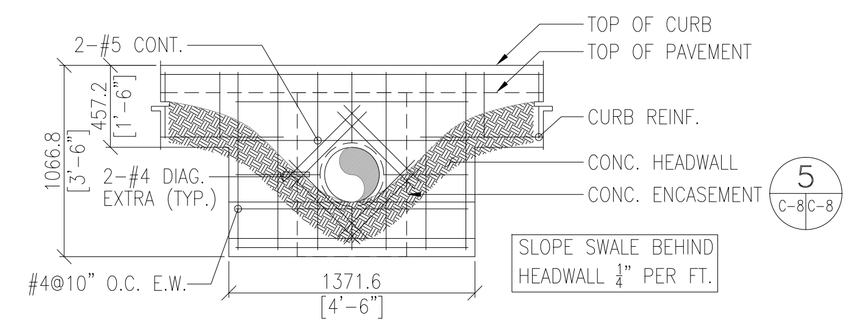

4B ELEVATION

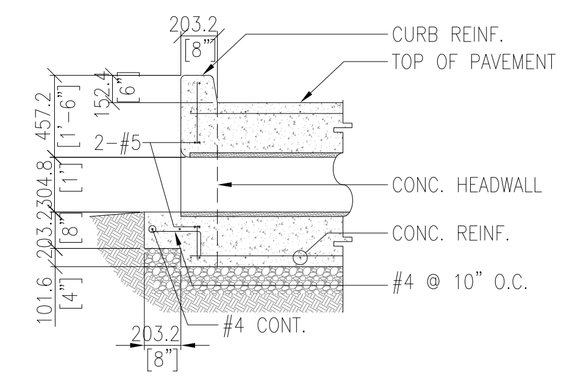

4C SECTION

4 C-3, C-5 C-8 CONCRETE HEADWALL (STRAIGHT TYPE)
SCALE: NTS

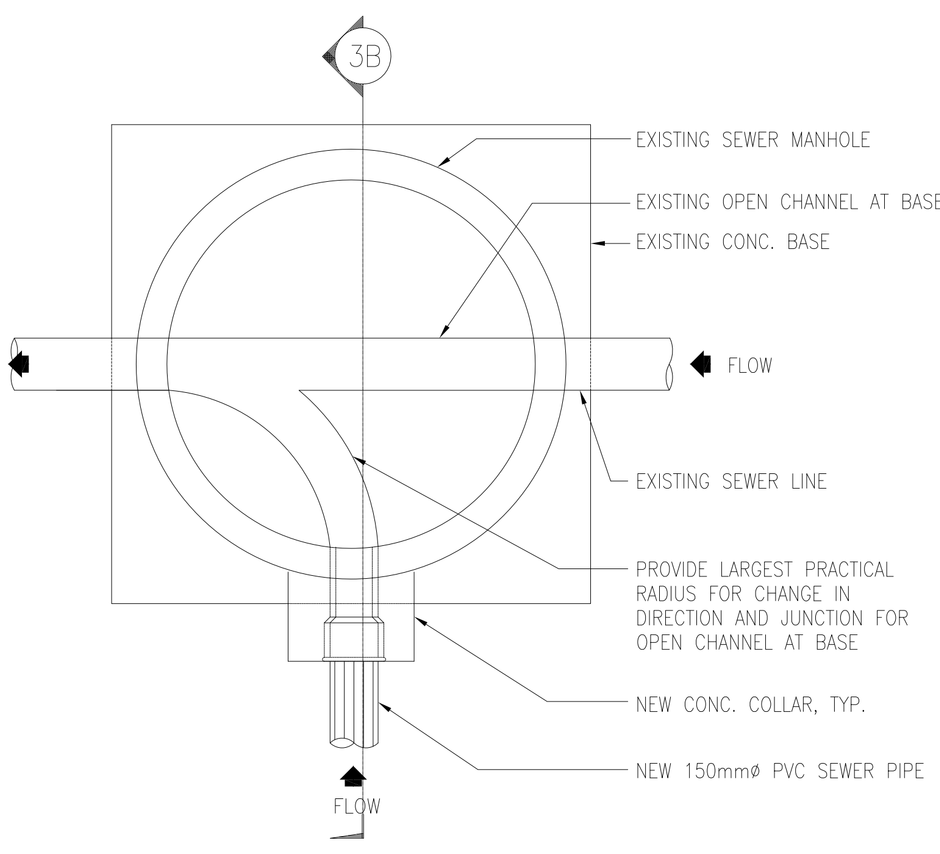

3A PLAN

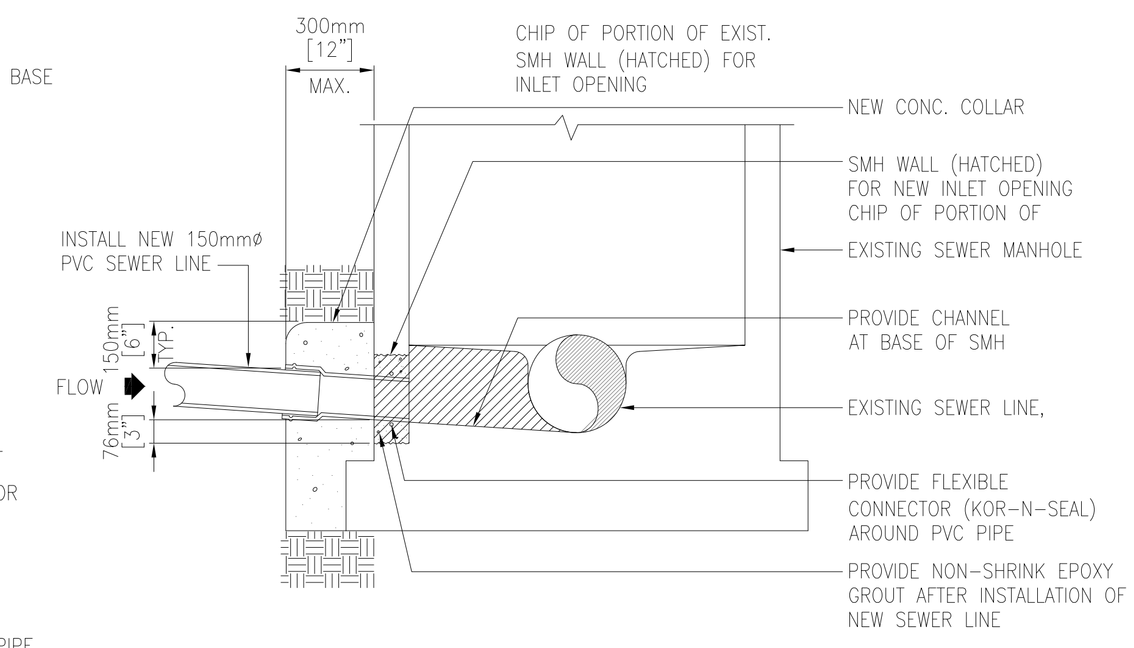

3B SECTION

3 C-3 C-8 SEWER CONN. TO EXISTING SEWER MANHOLE
SCALE: NTS

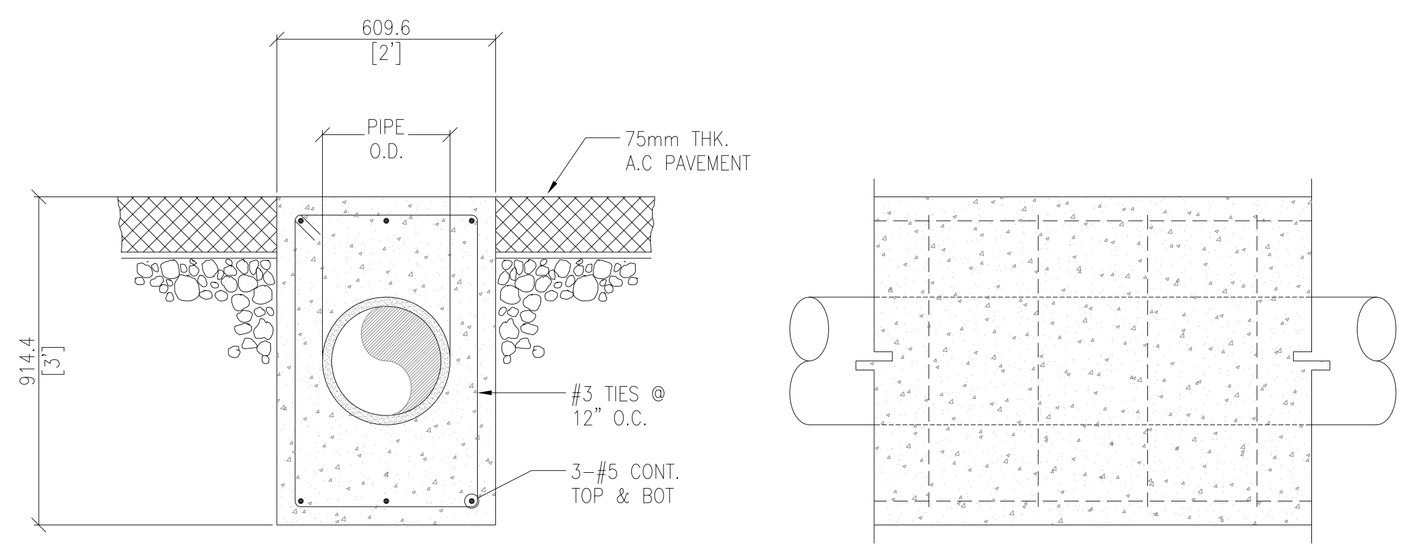

5 C-5, C-8 C-8 CONCRETE HEADWALL (STRAIGHT TYPE)
SCALE: NTS

FINAL RFP SUBMITTAL

GRAPHIC SCALE:

THE CONTRACTOR SHALL BE RESPONSIBLE FOR COORDINATING THE WORK AMONG THE VARIOUS TRADES AS NECESSARY TO AVOID CONFLICTS AND TO INSURE THE INSTALLATION OF ALL WORK WITHIN THE AVAILABLE SPACE.

SYM.	DESCRIPTION	DATE	APPR.

N.C. MACARIO & ASSOCIATES, INC.
P.O. Box 784 Agana, Guam 96910
Tel. 646-0947/48 Fax: 646-0901
Email: ncma@guam.net

SEAL

SUBMITTED BY
N.C. MACARIO & ASSOCIATES, INC.
FIRM NEMBER
NCM DATE
APPROVED
ACTIVITY - SATISFACTORY TO DATE
APPROVED
FOR COMMANDER NAVFAC PACIFIC DATE

DES	DR
CHK	QC
CH ENG	
REVIEWED BY	
PDE	
INIT. BRANCH MANAGER	
FIRE PROTECTION	
BRANCH MANAGER	
DESIGN DIRECTOR	

NAVAL FACILITIES ENGINEERING COMMAND
NAVFAC MARIANAS
SUMAY, GUAM

TITLE/LOCATION: FY12 MCAF PROJECT SAKW059101
PRTC - REDHORSE CANTONMENT OPERATIONS FACILITY,
ANDERSEN AIR FORCE BASE GUAM

SHEET CONTENT: MISCELLANEOUS DETAILS

CODE ID. NO. 80091 SIZE D
SCALE: AS SHOWN
CONST. CONTR. NO. 000000-00-0-0000
SPEC. NO. 00-00-0000
NAVFAC DRAWING NO.
SHEET 9 OF 31
C-8

DRAWFORM REVISION JUL 2009

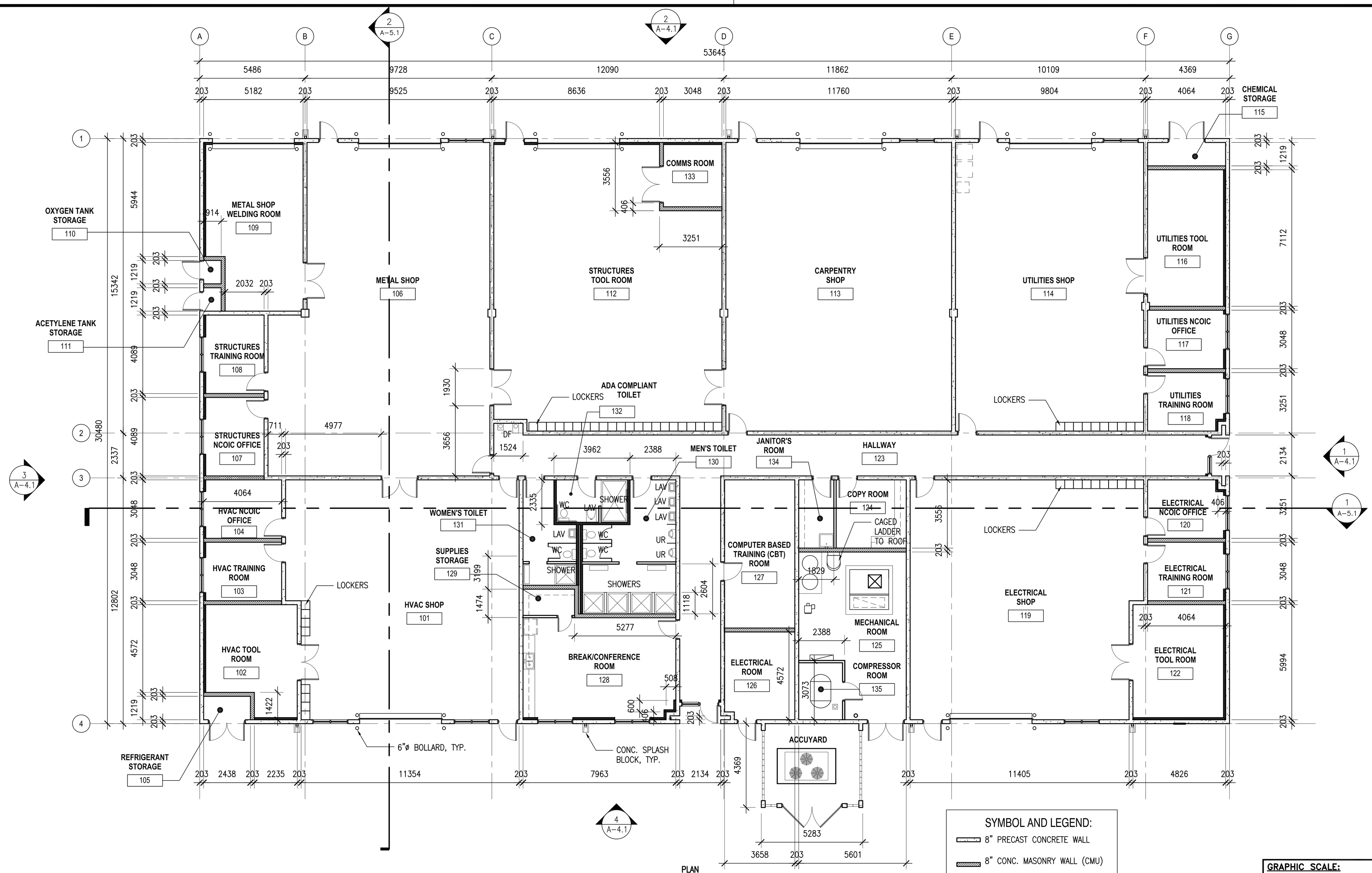

OVERALL FLOOR PLAN
1:100 M

SYMBOL AND LEGEND:

- 8" PRECAST CONCRETE WALL
- 8" CONC. MASONRY WALL (CMU)
- 3-5/8" METAL STUD WITH ⅝" GYPSUM BOARD ON EACH SIDE, WATER RESISTANT ON WET SIDE
- 3-5/8" METAL STUD WITH ⅝" GYPSUM BOARD ON ONE SIDE FILLED WITH THERMAL INSULATION AS REQUIRED

FINAL RFP SUBMITTAL

GRAPHIC SCALE:
0 1 2 5
SCALE: 1:100 METERS

THE CONTRACTOR SHALL BE RESPONSIBLE FOR COORDINATING THE WORK AMONG THE VARIOUS TRADES AS NECESSARY TO AVOID CONFLICTS AND TO INSURE THE INSTALLATION OF ALL WORK WITHIN THE AVAILABLE SPACE.

SYM.	DESCRIPTION	DATE	APPR.

N.C. MACARIO & ASSOCIATES, INC.
P.O. Box 784 Agana, Guam 96910
Tel. 646-0947/48 Fax: 646-0901
Email: ncma@guam.net

SEAL

SUBMITTED BY
N.C. MACARIO & ASSOC.
FIRM MEMBER
NCM DATE ------
APPROVED
ACTIVITY – SATISFACTORY TO DATE
APPROVED
FOR COMMANDER NAVFAC PACIFIC DATE

DES	DR
CHK	QC
CH ENG	

REVIEWED BY
PDE
INIT. BRANCH MANAGER
FIRE PROTECTION
BRANCH MANAGER
DESIGN DIRECTOR

NAVAL FACILITIES ENGINEERING COMMAND
NAVFAC MARIANAS
SUMAY, GUAM

TITLE/LOCATION:
FY12 MCAF PROJECT SAKW059101
PRTC – REDHORSE CANTONMENT OPERATIONS FACILITY,
ANDERSEN AIR FORCE BASE GUAM

SHEET CONTENT: OVERALL FLOOR PLAN

CODE ID. NO. 80091 SIZE D
SCALE: AS SHOWN
CONST. CONTR. NO. 000000-00-0-0000
SPEC. NO. 00-00-0000
NAVFAC DRAWING NO.
SHEET 10 OF 31
A-1.1

DRAWFORM REVISION JUL 2009

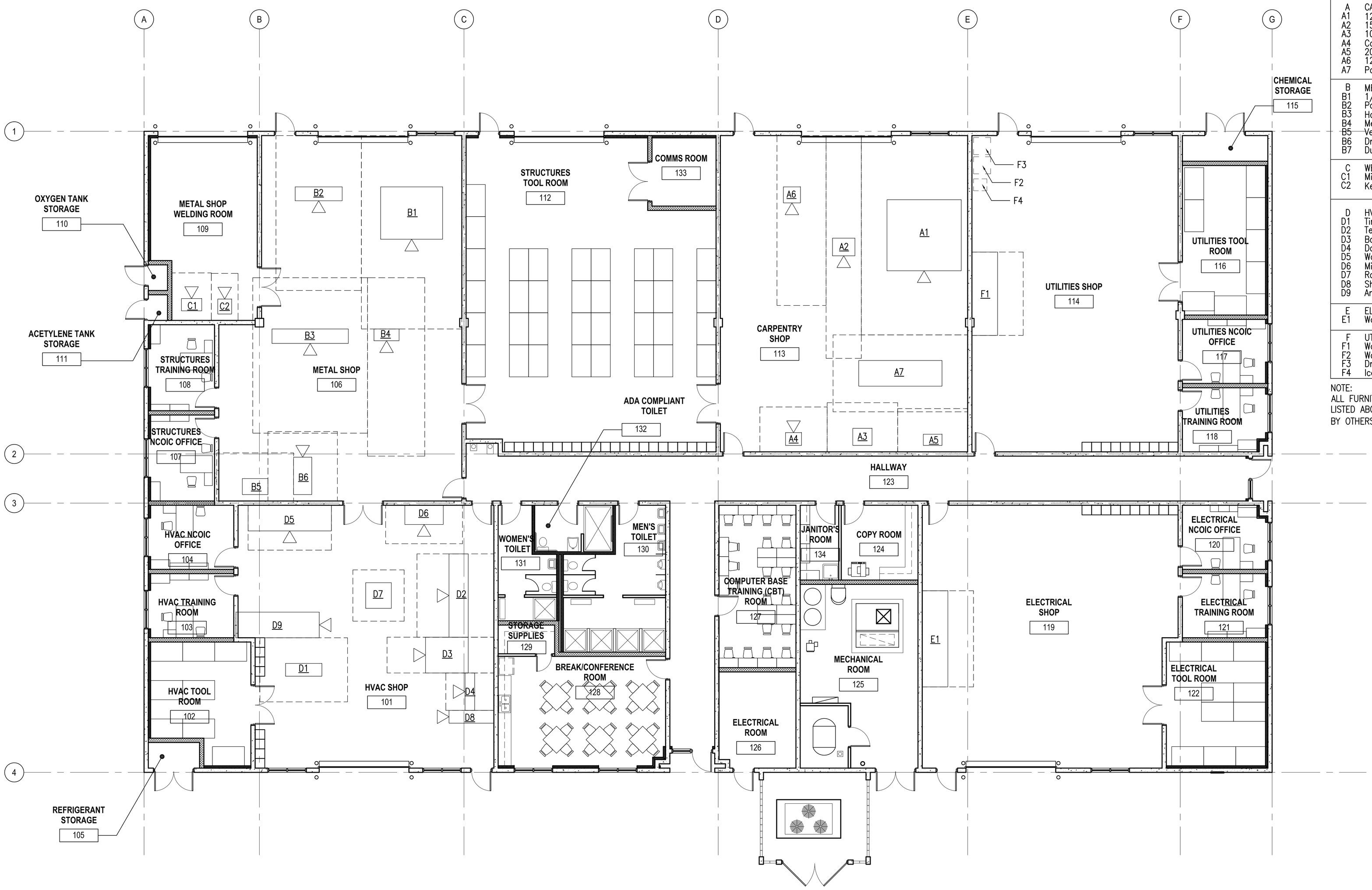

EQUIPMENT SCHEDULE

A	CARPENTRY SHOP EQUIPMENT
A1	12" Sliding Tablesaw w/Scoring
A2	15" Planer with Spiral Cutterhead
A3	10" Extreme Series Bandsaw
A4	Combination Sander with Cabinet Stand
A5	20" Floor Drill Press
A6	12" Radial Arm Saw
A7	Portable Workbench
B	METAL SHOP EQUIPMENT
B1	1/4 Hydraulic Shears
B2	Power Roll Forming Machine
B3	Hand Brakes
B4	Metal Cutting Bandsaw
B5	Vertical Metal Cutting Bandsaw
B6	Drilling/Tapping Machine
B7	Durapress
C	WELDING ROOM EQUIPMENT
C1	Miller Welding Machine
C2	Keen K450 Electrode Oven
D	HVAC UNIT EQUIPMENT
D1	Tim Knocker Fourplex Cleat Former
D2	Tennsmith Finger Break
D3	Baleigh Hydraulic Shear
D4	Dayton 50" Slip Roll
D5	Work Table
D6	Miscellaneous Work Bench
D7	Rolling Heavy Duty Work Table
D8	Sheet Metal Stand
D9	Area of temp storage of Kool Duct
E	ELECTRICAL SHOP EQUIPMENT
E1	Workbench
F	UTILITIES SHOP EQUIPMENT
F1	Workbench
F2	Washer
F3	Dryer
F4	Ice Maker

NOTE:
ALL FURNITURE SHOWN IN PLAN & EQUIPMENT LISTED ABOVE ARE GOVERNMENT FURNISH, INSTALL BY OTHERS (GFIBO)

FURNITURE LAYOUT
1:100 MTS

PLAN NORTH

FINAL RFP SUBMITTAL

GRAPHIC SCALE:
0 1 2 5
SCALE: 1:100 METERS

THE CONTRACTOR SHALL BE RESPONSIBLE FOR COORDINATING THE WORK AMONG THE VARIOUS TRADES AS NECESSARY TO AVOID CONFLICTS AND TO INSURE THE INSTALLATION OF ALL WORK WITHIN THE AVAILABLE SPACE.

SYM.	DESCRIPTION	DATE	APPR.

N.C. MACARIO & ASSOCIATES, INC.
P.O. Box 784 Agana, Guam 96910
Tel. 646-0947/48 Fax: 646-0901
Email: ncma@guam.net

SEAL

SUBMITTED BY
N.C. MACARIO & ASSOC.
FIRM MEMBER
NCM DATE ------
APPROVED
ACTIVITY - SATISFACTORY TO DATE
APPROVED
FOR COMMANDER NAVFAC PACIFIC DATE
DES DR
CHK QC
CH ENG
REVIEWED BY
PDE
INIT. BRANCH MANAGER
FIRE PROTECTION
BRANCH MANAGER
DESIGN DIRECTOR

NAVFAC
NAVAL FACILITIES ENGINEERING COMMAND
NAVFAC MARIANAS
SUMAY, GUAM

TITLE/LOCATION:
FY12 MCAF PROJECT SAKW059101
PRTC - REDHORSE CANTONMENT OPERATIONS FACILITY,
ANDERSEN AIR FORCE BASE GUAM

SHEET CONTENT:
FURNITURE LAYOUT

CODE ID. NO. 80091 SIZE D
SCALE: AS SHOWN
CONST. CONTR. NO. 000000-00-0-0000
SPEC. NO. 00-00-0000
NAVFAC DRAWING NO.
SHEET 11 OF 31
A-1.2

DRAWFORM REVISION JUL 2009

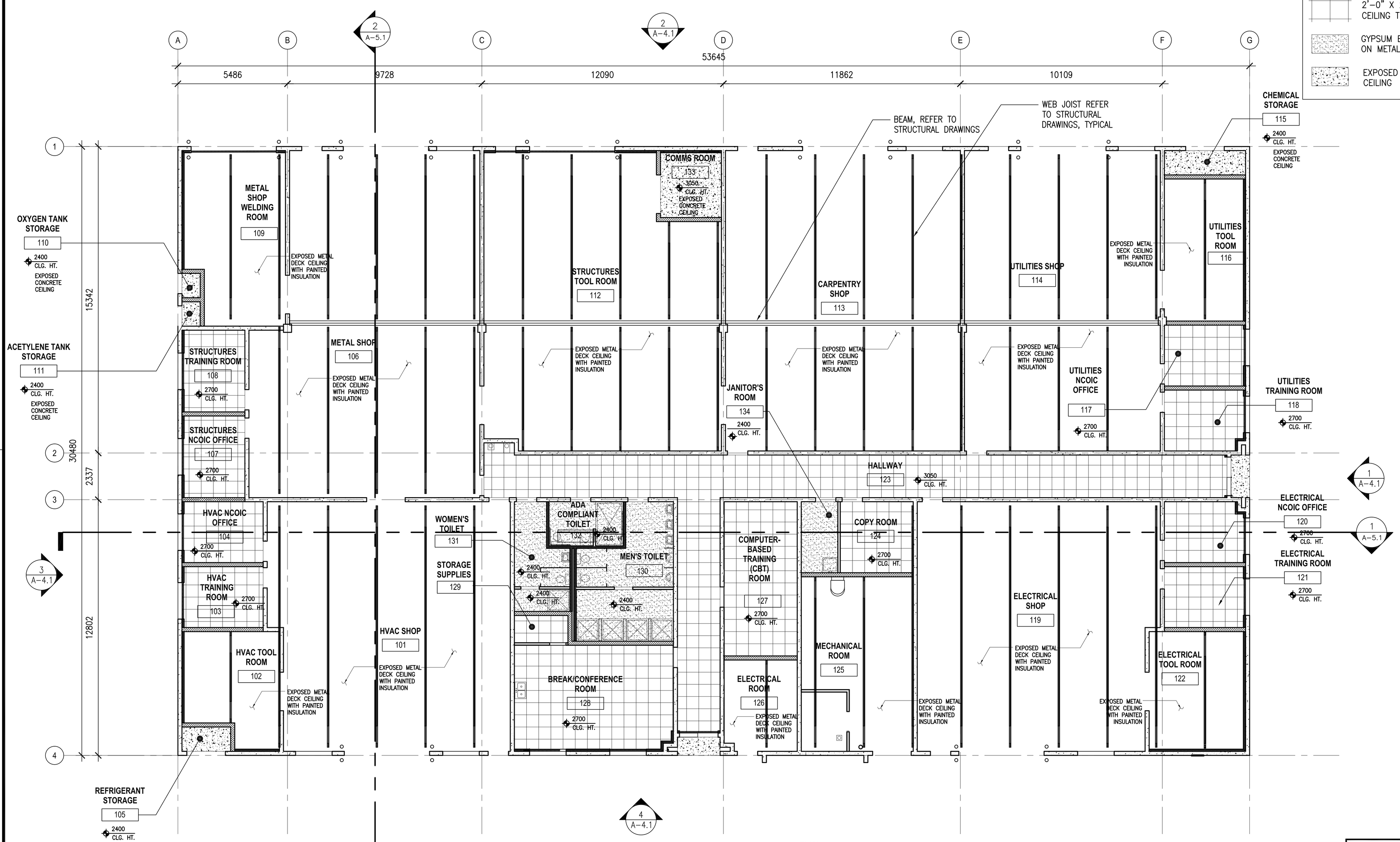

REFLECTED CEILING PLAN

1:100 MTS

PLAN NORTH

LEGEND:

- 2'-0" X 2'-0" ACOUSTICAL CEILING TILE ON GRID SYSTEM
- GYPSUM BOARD CEILING ON METAL FRAMES
- EXPOSED CONCRETE CEILING

GRAPHIC SCALE:

0 1 2 5

SCALE: 1:100 METERS

THE CONTRACTOR SHALL BE RESPONSIBLE FOR COORDINATING THE WORK AMONG THE VARIOUS TRADES AS NECESSARY TO AVOID CONFLICTS AND TO INSURE THE INSTALLATION OF ALL WORK WITHIN THE AVAILABLE SPACE.

FINAL RFP SUBMITTAL

SYM.	DESCRIPTION	DATE	APPR.

N.C. MACARIO & ASSOCIATES, INC.
P.O. Box 784 Agana, Guam 96910
Tel. 646-0947/48 Fax: 646-0901
Email: ncma@guam.net

SEAL

SUBMITTED BY
N.C. MACARIO & ASSOC.
FIRM MEMBER
NCM DATE ------
APPROVED
ACTIVITY - SATISFACTORY TO DATE
APPROVED
FOR COMMANDER NAVFAC PACIFIC DATE

DES	DR
CHK	QC
CH ENG	
REVIEWED BY	
PDE	
INIT. BRANCH MANAGER	
FIRE PROTECTION	
BRANCH MANAGER	
DESIGN DIRECTOR	

NAVAL FACILITIES ENGINEERING COMMAND
NAVFAC MARIANAS
SUMAY, GUAM

TITLE/LOCATION:
FY12 MCAF PROJECT SAKW059101
PRTC - REDHORSE CANTONMENT OPERATIONS FACILITY,
ANDERSEN AIR FORCE BASE GUAM

SHEET CONTENT: REFLECTED CEILING PLAN

CODE ID. NO. 80091 SIZE 0
SCALE: AS SHOWN
CONST. CONTR. NO. 000000-00-0-0000
SPEC. NO. 00-00-0000
NAVFAC DRAWING NO.
SHEET 12 OF 31
A-2.1

DRAWFORM REVISION JUL 2009

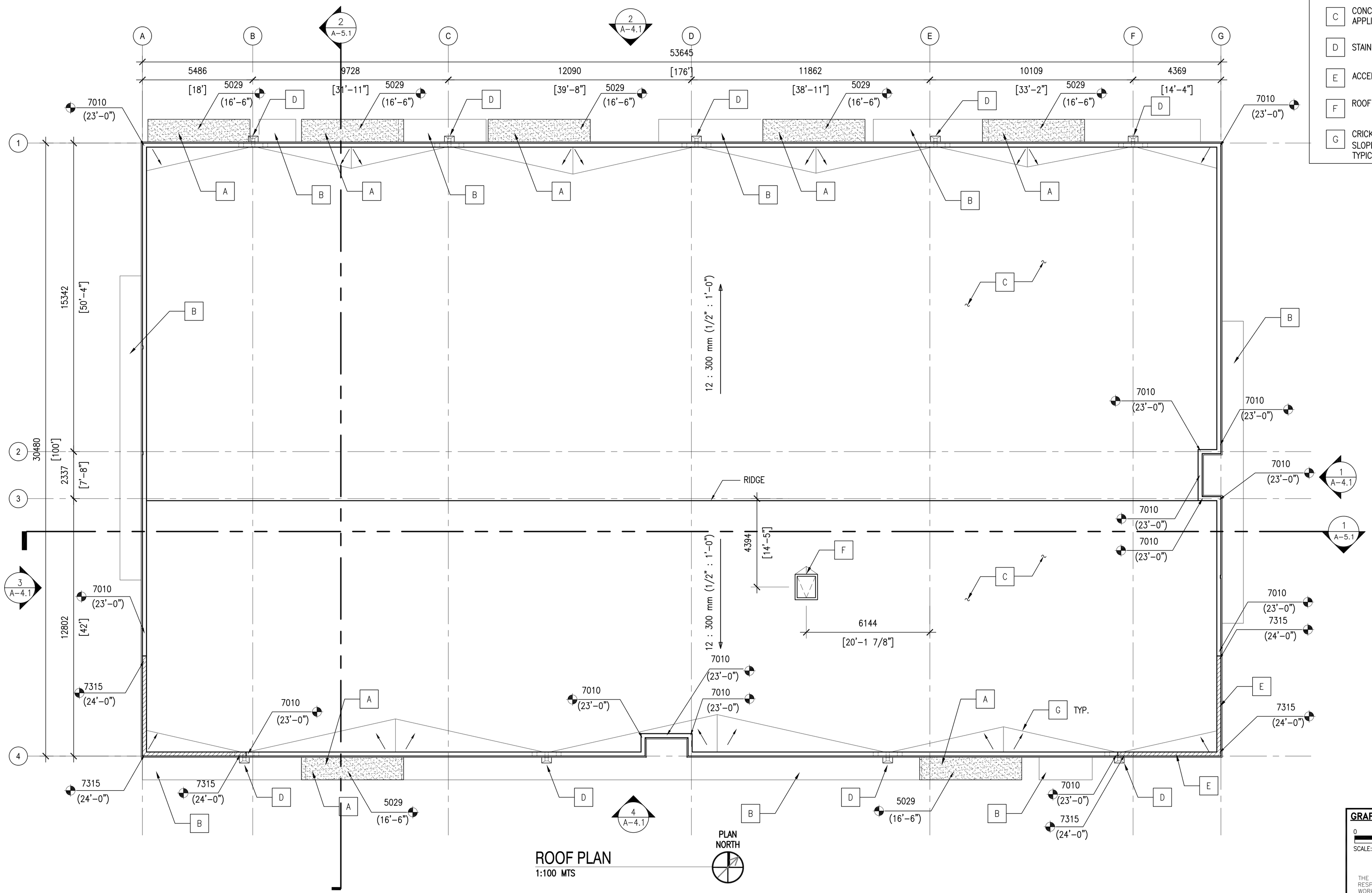

ROOF PLAN
1:100 MTS

SYMBOLS & LEGEND

A	CONCRETE UPPER CANOPY WITH DA-EFS
B	CONCRETE LOWER CANOPY WITH DA-EFS
C	CONCRETE ROOF DECK WITH LIQUID APPLIED ELASTOMERIC ROOFING.
D	STAINLESS STEEL SCUPPER,
E	ACCENT PARAPET WALL
F	ROOF HATCH
G	CRICKET AT CONCRETE DECK; SLOPE 12:300mm, (½" : 1'-0") TYPICAL

SYM.	DESCRIPTION	DATE	APPR.

N.C. MACARIO & ASSOCIATES, INC.
P.O. Box 784 Agana, Guam 96910
Tel. 646-0947/48 Fax: 646-0901
Email: ncma@guam.net

SEAL

SUBMITTED BY
N.C. MACARIO & ASSOC.
FIRM MEMBER
NCM DATE ------
APPROVED
ACTIVITY - SATISFACTORY TO
DATE
APPROVED
FOR COMMANDER NAVFAC PACIFIC
DATE

DES	DR
CHK	QC
CH ENG	

REVIEWED BY
PDE
INIT. BRANCH MANAGER
FIRE PROTECTION
BRANCH MANAGER
DESIGN DIRECTOR

NAVAL FACILITIES ENGINEERING COMMAND
NAVFAC MARIANAS
SUMAY, GUAM

TITLE/LOCATION:
FY12 MCAF PROJECT SAKW059101
PRTC - REDHORSE CANTONMENT OPERATIONS FACILITY, ANDERSEN AIR FORCE BASE GUAM

SHEET CONTENT:
ROOF PLAN

CODE ID. NO. 80091 SIZE D
SCALE: AS SHOWN
CONST. CONTR. NO.
000000-00-0-0000
SPEC. NO. 00-00-0000
NAVFAC DRAWING NO.
SHEET **13** OF **31**
A-3.1

GRAPHIC SCALE:
0 1 2 5
SCALE: 1:100 METERS

THE CONTRACTOR SHALL BE RESPONSIBLE FOR COORDINATING THE WORK AMONG THE VARIOUS TRADES AS NECESSARY TO AVOID CONFLICTS AND TO INSURE THE INSTALLATION OF ALL WORK WITHIN THE AVAILABLE SPACE.

FINAL RFP SUBMITTAL

DRAWFORM REVISION JUL 2009

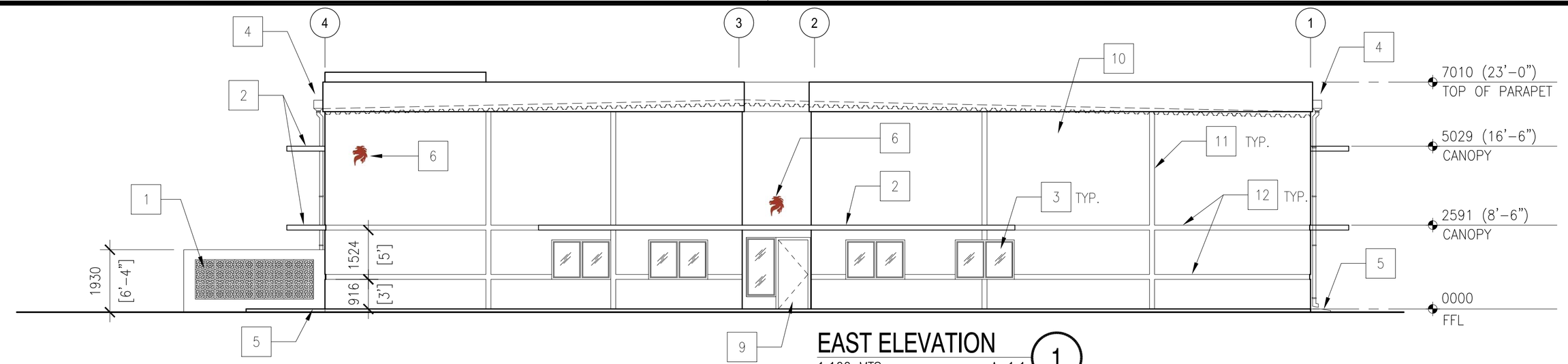

EAST ELEVATION 1
1:100 MTS A-1.1

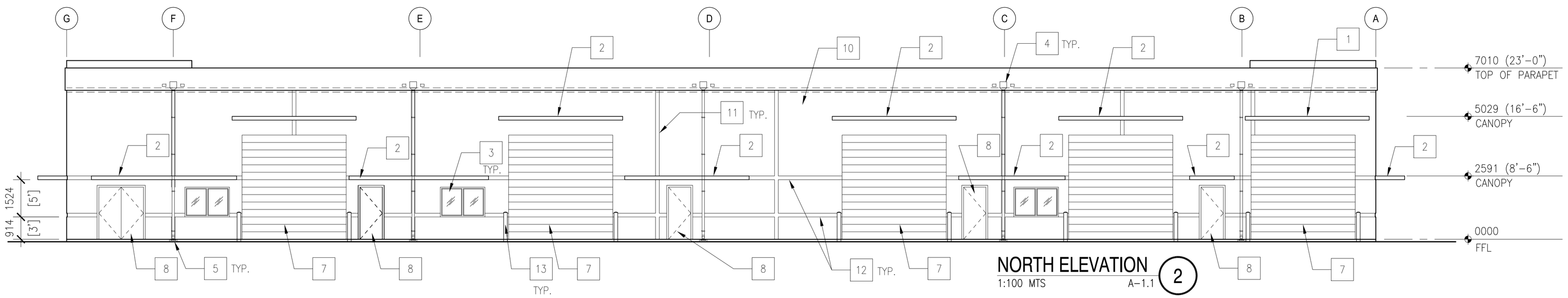

NORTH ELEVATION 2
1:100 MTS A-1.1

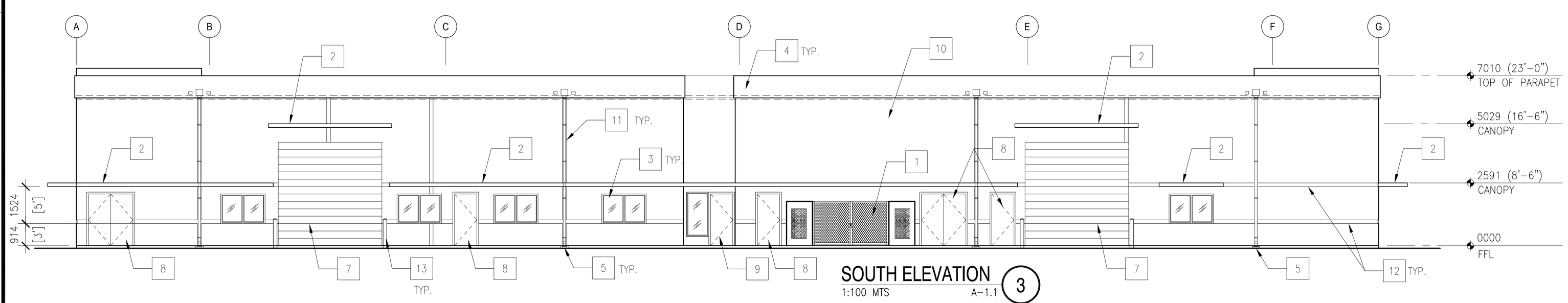

SOUTH ELEVATION 3
1:100 MTS A-1.1

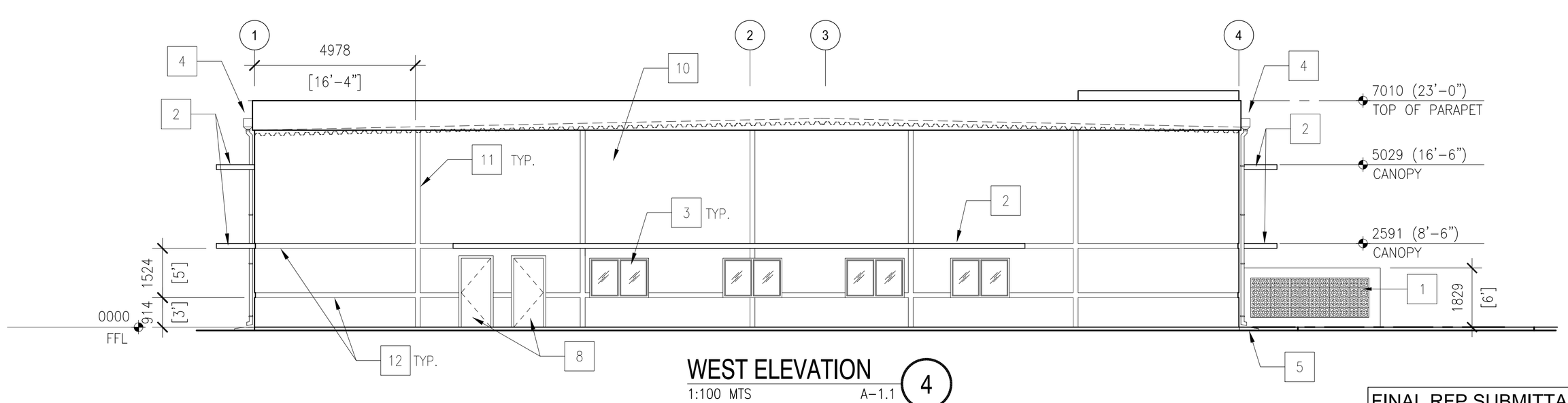

WEST ELEVATION 4
1:100 MTS A-1.1

SYMBOLS & LEGEND

1. DECORATIVE CONCRETE BLOCK
2. CONCRETE CANOPY WITH DIRECT APPLIED EXTERIOR FINISH SYSTEM (EFS)
3. ALUMINUM AND GLASS FIXED WINDOWS WITH ALUMINUM TYPHOON SHUTTERS.
4. STAINLESS STEEL SCUPPER, DOWNSPOUTS AND FASTENERS. OVERFLOW EACH SIDE.
5. CONCRETE SPLASH BLOCK
6. REDHORSE ORGANIZATIONAL EMBLEM STAMPED ON CONCRETE WALL. COORDINATE REQUIREMENTS WITH USING AGENCY.
7. PRE-PAINTED STEEL OVERHEAD COILING DOOR, INSULATED.
8. FLUSH ALUMINUM EXTERIOR DOOR AND FRAME.
9. ALUMINUM DOOR AND FRAMES WITH LAMINATED GLAZING AND SIDELIGHTS AND ALUMINUM TYPHOON SHUTTERS.
10. 8" PRECAST CONCRETE WALL WITH EFS
11. VERTICAL REVEAL
12. HORIZONTAL REVEAL
13. 6"ø BOLLARD FILLED WITH CONCRETE

GRAPHIC SCALE:
0 1 2 5
SCALE: 1:100 METERS

THE CONTRACTOR SHALL BE RESPONSIBLE FOR COORDINATING THE WORK AMONG THE VARIOUS TRADES AS NECESSARY TO AVOID CONFLICTS AND TO INSURE THE INSTALLATION OF ALL WORK WITHIN THE AVAILABLE SPACE.

FINAL RFP SUBMITTAL

SYM.	DESCRIPTION	DATE	APPR.

N.C. MACARIO & ASSOCIATES, INC.
P.O. Box 784 Agana, Guam 96910
Tel. 646-0947/48 Fax: 646-0901
Email: ncma@guam.net

SEAL

SUBMITTED BY
N.C. MACARIO & ASSOC.
FIRM NEMBER
NCM DATE ------
APPROVED
ACTIVITY - SATISFACTORY TO DATE
APPROVED
FOR COMMANDER NAVFAC PACIFIC DATE
DES DR
CHK QC
CH ENG
REVIEWED BY
PDE
INIT. BRANCH MANAGER
FIRE PROTECTION
BRANCH MANAGER
DESIGN DIRECTOR

NAVAL FACILITIES ENGINEERING COMMAND
NAVFAC MARIANAS
SUMAY, GUAM

TITLE/LOCATION:
FY12 MCAF PROJECT SAKW059101
PRTC - REDHORSE CANTONMENT OPERATIONS FACILITY,
ANDERSEN AIR FORCE BASE GUAM

SHEET CONTENT:
EXTERIOR ELEVATIONS

CODE ID. NO. 80091 SIZE D
SCALE: AS SHOWN
CONST. CONTR. NO.
000000-00-0-0000
SPEC. NO. 00-00-0000
NAVFAC DRAWING NO.
SHEET 14 OF 31
A-4.1

DRAWFORM REVISION JUL 2009

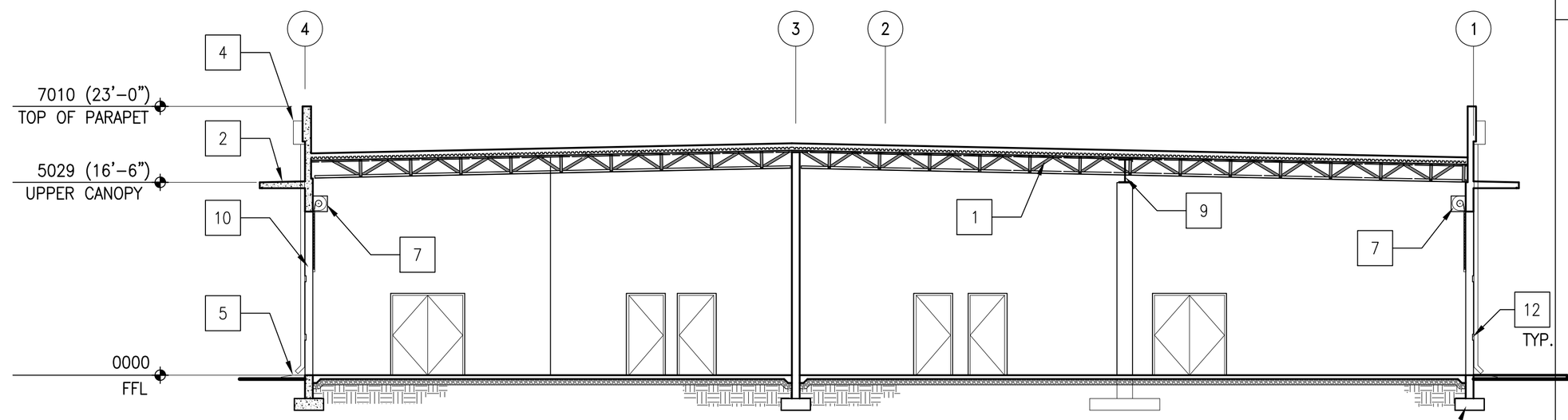

BUILDING SECTION 2
1:100 MTS A-1.1

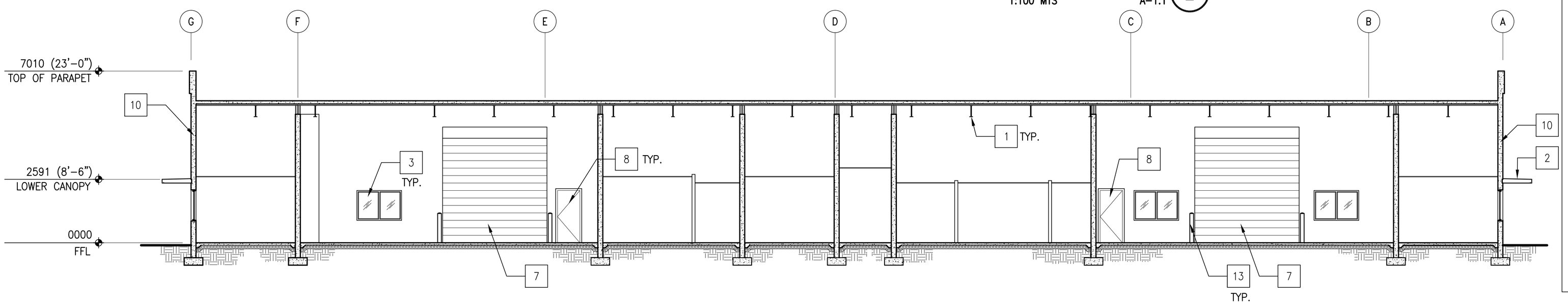

BUILDING SECTION 1
1:100 MTS A-1.1

SYMBOLS & LEGEND

1	WEB JOIST, REFER TO STRUCTURAL DRAWINGS.
2	CONCRETE CANOPY WITH DIRECT APPLIED EXTERIOR FINISH SYSTEM (EFS)
3	ALUMINUM AND GLASS FIXED WINDOWS WITH ALUMINUM TYPHOON SHUTTERS.
4	STAINLESS STEEL SCUPPER, DOWNSPOUTS AND FASTENERS
5	CONCRETE SPLASH BLOCK
6	STRUCTURAL CONCRETE FOOTING, REFER TO STRUCTURAL DRAWINGS
7	PRE-PAINTED STEEL OVERHEAD COILING DOOR, INSULATED.
8	FLUSH ALUMINUM EXTERIOR DOOR AND FRAME.
9	STRUCTURAL BEAM, REFER TO STRUCTURAL DRAWINGS.
10	8" PRECAST CONCRETE WALL WITH EFS
11	CONCRETE TOPPING OVER METAL DECK, REFER TO STRUCTURAL DRAWINGS.
12	HORIZONTAL REVEAL
13	6"ø BOLLARD, FILLED WITH CONCRETE

GRAPHIC SCALE:

0 1 2 5

SCALE: 1:100 METERS

THE CONTRACTOR SHALL BE RESPONSIBLE FOR COORDINATING THE WORK AMONG THE VARIOUS TRADES AS NECESSARY TO AVOID CONFLICTS AND TO INSURE THE INSTALLATION OF ALL WORK WITHIN THE AVAILABLE SPACE.

FINAL RFP SUBMITTAL

SYM.	DESCRIPTION	DATE	APPR.

N.C. MACARIO & ASSOCIATES, INC.
P.O. Box 784 Agana, Guam 96910
Tel. 646-0947/48 Fax: 646-0901
Email: ncma@guam.net

SEAL

SUBMITTED BY
N.C. MACARIO & ASSOC.
FIRM MEMBER
NCM DATE ------
APPROVED
ACTIVITY - SATISFACTORY TO DATE
APPROVED
FOR COMMANDER NAVFAC PACIFIC DATE

DES	DR
CHK	QC
CH ENG	
REVIEWED BY	
PDE	
INIT. BRANCH MANAGER	
FIRE PROTECTION	
BRANCH MANAGER	
DESIGN DIRECTOR	

NAVAL FACILITIES ENGINEERING COMMAND
NAVFAC MARIANAS
SUMAY, GUAM

TITLE/LOCATION:
FY12 MCAF PROJECT SAKW059101
PRTC REDHORSE CANTONMENT OPERATIONS FACILITY,
ANDERSEN AIR FORCE BASE GUAM

SHEET CONTENT:
BUILDING SECTIONS

CODE ID. NO. 80091 SIZE D
SCALE: AS SHOWN
CONST. CONTR. NO.
000000-00-0-0000
SPEC. NO. 00-00-0000
NAVFAC DRAWING NO.
SHEET 15 OF 31
A-5.1

DRAWFORM REVISION JUL 2009

STRUCTURAL NOTES

A. GENERAL

1. GENERAL NOTES AND TYPICAL STRUCTURAL DETAILS SHALL APPLY TO ALL DRAWINGS UNLESS OTHERWISE SHOWN OR NOTED. FEATURES OF CONSTRUCTION SHOWN ARE TYPICAL AND SHALL APPLY GENERALLY THROUGHOUT FOR SIMILAR CONDITIONS. MODIFY TYPICAL DETAILS AS REQUIRED TO MEET SPECIAL CONDITIONS.
2. THE CONTRACTOR SHALL EXAMINE THE DRAWINGS AND SHALL NOTIFY THE ENGINEER/ARCHITECT OF ANY DISCREPANCIES HE MAY FIND BEFORE PROCEEDING WITH THE WORK OR DURING CONSTRUCTION.
3. THE CONTRACTOR WILL BE RESPONSIBLE FOR COORDINATING THE WORK AMONG THE VARIOUS TRADES AS NECESSARY TO AVOID CONFLICTS AND TO INSURE THE INSTALLATION OF ALL WORK WITHIN THE AVAILABLE SPACE.
4. ALL MATERIALS AND WORKMANSHIP SHALL CONFORM WITH THE LATEST APPLICABLE STANDARDS OR SPECIFICATIONS. ALL WORKS SHALL CONFORM WITH THE BEST PRACTICE PREVAILING IN THE VARIOUS TRADES.
5. IT SHALL BE THE CONTRACTOR'S RESPONSIBILITY TO PROVIDE ADEQUATE SHORING AND BRACING OF THE STRUCTURE FOR ALL LOADS THAT MAY BE IMPOSED DURING CONSTRUCTION.
6. DO NOT SCALE DRAWINGS, CALLED-OUT DIMENSIONS AND STANDARD CODE REQUIREMENTS SHALL GOVERN OVER UNSCALED DRAWINGS.
7. DIMENSIONS INDICATED ON THE STRUCTURAL DRAWINGS SHALL BE COORDINATED WITH THE ARCHITECTURAL DRAWINGS. ARCHITECTURAL DRAWINGS SHALL BE USED TO DEFINE DETAIL CONFIGURATIONS, ELEVATIONS, OPENINGS, JOINTS, SLOPES, ETC.
8. INSPECTION – ALL CONSTRUCTION AND WORKMANSHIP SHALL BE SUBJECT TO INSPECTION, EXAMINATION AND TESTING BY THE ENGINEER/ARCHITECT. THE ENGINEER/ARCHITECT SHALL HAVE THE RIGHT TO REJECT DEFECTIVE MATERIALS AND WORKMANSHIP OR REQUIRE ITS CORRECTION.
9. OWNER SHALL EMPLOY INSPECTOR AS SPECIFIED IN IBC REQUIREMENTS.

B. FOUNDATION

1. ALL SITE PREPARATION AND FOUNDATION SHALL BE AS PER RECOMMENDATIONS GEO ENGINEERING AND TESTING INC. SOILS REPORT DATED 12 APRIL 2010.
2. BOTTOM OF FOOTING ELEVATION AS SHOWN ON THE DRAWINGS SHALL BE MAINTAINED AS MINIMUM ELEVATION UNLESS SOLID CORAL IS ENCOUNTERED AT HIGHER ELEVATIONS. FOOTING WITHOUT INDICATED BOTTOM ELEVATION SHALL BE 24" MINIMUM OR AS REQUIRED BY THE ENGINEER TO INSURE SUPPORT ON SOLID GROUND.
3. EXCAVATION OF ALL FOOTINGS SHALL BE DONE IN ACCORDANCE WITH THE CONTOURS AND DIMENSIONS INDICATED. BOTTOM OF EXCAVATIONS SHALL BE SLIGHTLY SLOPED TO PROVIDE PROPER SURFACE DRAINAGE AND TO AVOID SURFACE PONDING.
4. THE BASE COURSE SHOULD BE INSTALLED IN MAXIMUM 8 INCHES THICK LOOSE LAYER AND COMPACTED TO A DRY DENSITY EQUIVALENT OF AT LEAST 95 PERCENT RELATIVE COMPACTION DENSITY BY THE ASTM D1557.
5. FOOTING EXCAVATION AND RECOMPACTION SHALL BE INSPECTED BY THE ENGINEER TO VERIFY CONDITION OF SOIL BEARING PRIOR TO PLACEMENT OF FOUNDATION FORMS AND REINFORCEMENTS. WHERE UNSATISFACTORY SOILS ARE EXPOSED, THEY SHALL BE OVER-EXCAVATED AND REPLACED WITH LEAN CONCRETE OR CEMENT GROUT OR AS OTHERWISE INSTRUCTED BY THE ENGINEER.
6. CONTRACTOR SHALL NOTIFY ENGINEER TO CONDUCT SITE INSPECTIONS PRIOR TO PLACEMENT OF FOUNDATION IN ORDER TO MODIFY DESIGN REQUIREMENTS IN THE EVENT OF DISCREPANCIES FROM DESIGN ASSUMPTIONS AND ACTUAL FIELD CONDITION.

C. REINFORCED CONCRETE

1. ALL CONCRETE SHALL DEVELOP A MINIMUM ULTIMATE COMPRESSIVE STRENGTH AT THE END OF 28 DAYS, AS SPECIFIED UNDER BASIC DESIGN CRITERIA
2. ALL CONCRETE WORK SHALL CONFORM TO THE LATEST CODE OF THE AMERICAN CONCRETE INSTITUTE (ACI 318-08).
3. LOCATION OF ALL CONSTRUCTION OR CONTRACTION JOINTS MUST BE APPROVED BY THE ENGINEER/ARCHITECT.
4. PIPES OR DUCTS EXCEEDING ONE THIRD OF THE SLAB OR WALL THICKNESS SHALL NOT BE PLACED IN STRUCTURAL CONCRETE UNLESS SPECIFICALLY DETAILED. PIPES MAY PASS THROUGH STRUCTURAL CONCRETE IN SLEEVES BUT SHALL NOT BE EMBEDDED THEREIN.
5. REINFORCING BARS, ANCHOR BOLTS, AND OTHER INSERTS SHALL BE SECURED IN PLACE BEFORE POURING. CONCRETE BAR PLACEMENT AND SUPPORTS SHALL BE IN ACCORDANCE WITH THE RECOMMENDED ACI PRACTICE.
6. ALL INSERTS, ANCHOR BOLTS, PLATES, ETC. TO BE EMBEDDED IN CONCRETE SHALL BE HOT DIP GALVANIZED UNLESS OTHERWISE NOTED.
7. IN GENERAL,THE LATEST EDITION OF "MANUAL OF STANDARD PRACTICE FOR DETAILING CONCRETE STRUCTURES" ACI 315, SHALL BE ADHERED.
8. USE OF ADMIXTURE IS PERMITTED TO PRODUCE PROPER SLUMP AND WORKABILITY BUT SUBJECT TO THE ENGINEER'S APPROVAL. ADDITION OF WATER TO CONCRETE AT JOBSITE IS NOT ALLOWED.
9. 48 HOURS PRIOR TO THE PLACEMENT OF ANY STRUCTURAL CONCRETE THE CONTRACTOR SHALL NOTIFY THE ENGINEER SO AN INSPECTION CAN BE MADE ON ALL FORMS AND REINFORCING.

D. TILT UP WALLS

1. ALL PANELS ARE 8" THICK, OUT TO OUT OF PANELS AND INCLUDE ARCHITECTURAL FINISHES UNLESS NOTED OTHERWISE. REFERENCE CONCRETE STRENGTH REQUIRED. MINIMUM COVERS LISTED IN REINFORCING STEEL NOTES ARE TO BE PROVIDED FROM INSIDE EDGE OF REVEALS, TYP.
2. NO PLACEMENT OF CONCRETE TILT WALLS PANELS WILL BE ALLOWED ON THE FLOOR SLAB UNTIL SLAB HAS REACHED 75% OF THE 28-DAY COMPRESSIVE STRENGTH. PANELS ARE TO BE CAST OUTSIDE FACE DOWN.
3. CONTRACTOR IS RESPONSIBLE FOR DESIGNING PANELS TO RESIST LIFTING STRESS AND FOR PROVIDING ADEQUATE TEMPORARY BRACING. AS A MINIMUM PANELS ARE NOT TO BE MOVED OR ERECTED FOR AT LEAST 7 DAYS FROM THE TIME OF PLACEMENT, OR UNTIL 75% OF THE SPECIFIED 28-DAY STRENGTH HAS BEEN OBTAINED. THE PANELS ARE TO BE ADEQUATELY BRACED FROM THE TIME OF ERECTION UNTIL ROOF FRAMING IS COMPLETED.
4. SHOP DRAWINGS SHALL SHOW LOCATION OF ALL PANEL REINFORCING AND TYPE AND LOCATION OF LIFTING AND BRACING INSERTS, LOCATION OF WELDING INSERTS FOR STRUCTURAL CONNECTIONS AND ANY ADDITIONAL REINFORCING OR STRONG BACKS REQUIRED TO RESIST LIFTING STRESSES. THIS SUBMITTAL IS TO INCLUDE CALCULATIONS REPAIRED AND SEALED BY A PROFESSIONAL ENGINEER REGISTERED IN THE STATE CASTING WILL BEGIN UNTIL SHOP DRAWINGS ARE APPROVED BY CONTRACTOR AND A/E.
5. ALL JOINTS BETWEEN PANELS ARE TO BE 3/4" UNLESS OTHERWISE NOTED. ALL PANEL EDGES TO BE CHANPERED 3/4" UNLESS OTHERWISE. REFERENCE ARCHITECTURAL FOR ALL PANEL JOINT LOCATIONS, FINISHES AND REVEALS.
6. ALL PANELS SHALL HAVE A MINIMUM BEARING WIDTH = 8"

E. STRUCTURAL STEEL

1. ALL STRUCTURAL MILL SECTIONS OR WELDED UP PLATE SECTIONS SHALL BE DESIGNED IN ACCORDANCE WITH AISC'S LATEST "SPECIFICATION FOR THE DESIGN, FABRICATION AND ERECTION OF STRUCTURAL STEEL FOR BUILDING".
2. COMPLY WITH AISC CODE AND SPECIFICATIONS FOR BEARING, ADEQUACY IF TEMPORARY CONNECTIONS AND ALIGNMENT.
3. STEEL PLATES, SHAPES, BAR AND METAL FABRICATIONS: ASTM A-529 & GALV. TO ASTM A-153.
4. STRUCTURAL BOLTS SHALL BE: ASTM A-325, UNLESS OTHERWISE NOTED & GALVANIZED.
5. ANCHOR BOLTS SHALL BE ASTM A-307 UNLESS OTHERWISE NOTED & GALVANIZED.
6. ELECTRODES FOR WELDING: ASTM A-233 E-70XX SERIES; COMPLY WITH AWS D1.1/D1.1M:2008 CODE REQUIREMENTS.
7. FLAME CUTTING AND WELDING SHALL BE DONE IN ACCORDANCE WITH LATEST "STANDARD CODE FOR WELDING IN BUILDING CONSTRUCTION" OF THE AMERICAN WELDING SOCIETY.
8. CONTRACTOR SHALL FURNISH COMPLETE DESIGN CALCULATIONS FOR ALL STEEL MEMBERS, CONNECTIONS AND ERECTION DRAWINGS FOR THE PROPER IDENTIFICATION AND ASSEMBLY OF ALL BUILDING COMPONENTS. THESE DRAWINGS WILL SHOW ANCHOR BOLT SETTINGS, PRIMARY SECONDARY, FRAMING, AND NECESSARY INSTALLATION DETAILS. SUBMIT SHOP DRAWINGS FOR APPROVAL BEFORE FABRICATION.

F. METAL DECK

1. PROVIDE DESIGN, FABRICATION, AND ERECTION OF METAL DECK CONFORMING TO THE STEEL DECK INSTITUTES "CODE OF RECOMMENDED STANDARD PRACTICE AND BASIC DESIGN SPECIFICATIONS".
2. FORM DECK FROM STEEL SHEETS CONFORMING TO ASTM A-611 GRADE C AND D, OR ASTM-653 WITH THE FOLLOWING MINIMUM YIELD STRENGTH: COMPOSITE ROOF DECK 40 KSI.
3. ATTACH SHEETS TO STEEL SUPPORT MEMBERS AS INDICATED AND IN ACCORDANCE WITH THE MANUFACTURER'S INSTRUCTIONS FOR INSTALLATION.
4. LAP DECK ENDS MINIMUM OF 2 INCHES. WHEN FASTENING DECK TO SUPPORT MEMBERS PROVIDE WELDING MATERIALS INSTALLATION PROCEDURES TO PREVENT BURNING OF HOLES IN DECK.
5. PROVIDE 6 INCH CLOSURE STRIP WHERE CHANGES IN DECK DIRECTION OCCUR. CLOSURE TO BE SAME GAGE AS DECK.
6. AT ENDS OF DECK OR WHERE CHANGES OF DECK DIRECTION OCCUR, FASTEN TO SUPPORTS AT EACH FLUTE. PROVIDE ADEQUATE CLOSURES AND FASTENERS TO SIDES AT 18 INCHES ON CENTER.
7. WHERE PARTIAL PANELS MAY BE REQUIRED TO COMPLETE DECK INSTALLATION AT PERIMETER OF STRUCTURE, PROVIDE WELDS IN EACH FLUTE TO STRUCTURAL MEMBERS.
8. INSTALL DECK IN THREE SPAN LENGTHS WHEREVER POSSIBLE.
9. COMPOSITE ROOF AND FLOOR DECK:
10. PROVIDE 3" DEEP, 20 GAGE, GALVANIZED (G90), METAL DECK.
11. PROVIDE POSITIVE ATTACHMENT TO ALL FRAMING MEMBERS WITH 5/8" DIAMETER PUDDLE WELDS USING A 36/4 PATTERN, (MINIMUM).
12. PROVIDE SIDELAP FASTENERS AS REQUIRED TO PROVIDE AN ALLOWABLE STRESS LEVEL DIAPHRAGM STRENGTH OF 2300 PLF AT THE MEZZANINES THE METAL DECK MANUFACTURER SHALL PROVIDE PRODUCT DATA AT THE TIME OF SHOP DRAWING REVIEW SHOWING THE REQUIRED DECK ATTACHMENT BASED ON DIAPHRAGM REQUIREMENTS.
13. AT PERIMETER OF DECK, SECURE DECK TO STRUCTURAL MEMBERS WITH 5/8" DIAMETER PUDDLE WELDS AT 6" O.C. (MAX.).

G. REINFORCING STEEL

1. ALL REINFORCING BARS SHALL CONFORM TO BASIC DESIGN CRITERIA.
2. ANY WELDING TO BE PERFORMED MUST HAVE PRIOR WRITTEN APPROVAL OF THE ENGINEER.
3. WELDING OF REINFORCING STEEL IS NOT PERMITTED UNLESS OTHERWISE SHOWN ON THE DRAWINGS. WELDING OF REINFORCING STEEL SHALL CON- FORM TO AWS D1.4-2005 AWS STRUCTURAL WELDING CODE – REINFORCING STEEL" OF THE AMERICAN WELDING SOCIETY. REINFORCING STEEL WHICH IS WELDED SHALL CONFORM TO ASTM A 706. REINFORCING STEEL NOT CONFORMING TO ASTM A 706 MAY BE USED IF MATERIAL PROPERTIES OF THE REINFORCING STEEL CONFORM TO AWS D1.4-05.
4. REINFORCING BARS SHALL BE SPLICED 42d (d= BAR DIAMETER) ONLY AS INDICATED ON THE DRAWINGS.
5. PROVIDE DOWELS IN FOOTINGS AND/OR GRADE BEAMS THE SAME SIZE AND SPACING AS COLUMN AND WALL REINFORCING, UNLESS OTHERWISE NOTED.
6. WELDED WIRE FABRIC (WWF) SHALL CONFORM TO ASTM A-185. WELDED WIRE FABRIC IN SUSPENDED SLABS SHALL HAVE FY = 60 KSI. LAP 12" MINIMUM OR TWO FULL MESH, WHICHEVER IS GREATER FOR SLABS ON GRADE.
7. MINIMUM CONCRETE COVER FOR REINFORCING BARS SHALL BE:
   - CONCRETE CAST AGAINST EARTH ..... 3"
   - EXPOSED TO EXTERIOR OR WEATHER ..... 1 1/2"
   - FORMED SURFACE BELOW GRADE ..... 2"
   - SLAB ON GRADE ..... 2"
   - COLUMNS & BEAMS ..... 1 1/2"
   - STRUCTURAL SLABS TOP & BOT. (INTERIOR) .....1 1/2" & 1"
8. IN GENERAL, BAR SPLICES SHALL BE MADE AT POINTS OF MINIMUM STRESS. SPLICES SHALL BE SECURELY WIRED TOGETHER. STAGGER SPLICES AT LEAST 24" WHENEVER POSSIBLE IN BEAMS AND SLABS. SPLICE TOP BARS AT MIDSPAN AND BOTTOM BARS NEAR SUPPORT. SPLICE OF REINFORCEMENT SHALL BE MADE ONLY AS REQUIRED OR PERMITTED ON DESIGN DRAWINGS OR AS ALLOWED BY THE ACI CODE OR AS AUTHORIZED BY THE ENGINEER.
9. ANCHOR BOLTS, DOWELS AND OTHER EMBEDDED ITEMS ARE TO BE SECURELY TIED IN PLACE BEFORE CONCRETE IS POURED.
10. ALL REINFORCING BAR BENDS SHALL BE COLD BENT PER ACI 315.
11. SHOP DRAWINGS: THE CONTRACTOR SHALL SUBMIT SHOP DRAWINGS FOR REINFORCING STEEL PREPARED IN ACCORDANCE WITH ACI 315. INDICATE BENDING DIAGRAM, ASSEMBLY DIAGRAM, SPLICING AND LAPS OF RODS AND SHAPES DIMENSIONS AND DETAILS FOR REINFORCING BARS.

H. BASIC DESIGN CRITERIA

A. CODES AND REFERENCES

1. IBC-2009 INTERNATIONAL BUILDING CODE
2. ACI 318-08 BUILDING CODE REQUIREMENTS FOR REINF. CONC.
3. ASCE 7-08 MINIMUM DESIGN LOAD FOR BUILDING & STRUCTURES.
4. AISC AMERICAN INSTITUTE OF STEEL CONSTRUCTION 9-TH EDITION
5. MBMA 02 METAL BUILDING MANUFACTURER'S ASSOCIATION
6. ACI 315 HANDBOOK FOR CONCRETE DETAILING
7. CMU DESIGN MANUAL
8. AISI-NORTH AMERICAN SPECIFICATION DESIGN OF COLD-FORMED STEEL STRUCTURAL MEMBER.

B. MATERIALS STRESSES

1. CONCRETE AT 28 DAYS (min.)
   - CAST IN PLACE ---------- fc' = 4,000 PSI
   - TIT-UP WALL ---------- fc' = 5,000 PSI
   - NON-SHRINK GROUT ---------- f'c = 7,000 PSI
   - MASONRY ---------- f'c = 1,350 PSI
2. REINFORCING BARS
   - #4 & SMALLER ASTM 615 ------ fy = 40,000 PSI
   - #5 & LARGER ASTM 615 ------- fy = 60,000 PSI
   - ASTM A615 & ASTM A706 GRADE 40
3. STRUCTURAL STEEL
   - OPEN WEB JOIST ---------- Fy = 50 KSI
4. WELDED WIRE FABRIC --------- Fy = 60 KSI
5. BEARING PADS:
   HARDBOARD (INTERIOR ONLY) ANSI A135.4 CLASS AS SPECIFIED BY THE MANUFACTURER. (SHALL SUPPORT COMPRESSIVE STRESS OF 4,000 PSI
6. CAST-IN ANCHORS:
   DEFORMED BARS ANCHORS ASTM A496
   BOLTS ASTM A307M OR ASTM A325M.

C. LOADING

1. DEAD LOAD
   - A.) CONCRETE ---------- ACTUAL
   - B.) MISC.---------- 10 PSF
2. LIVE LOAD
   - A.) ROOF ---------- 20 PSF
3. WIND LOAD
   - A.) BASIC WIND PRESSURE ------ V = 170 MPH
   - B.) EXPOSURE CATEGORY ------- D
   - C.) IMPORTANCE FACTOR ------- Iw = 1.00
   - D.) WIND SUCTION
   - E.) TOPOGRAPHIC FACTOR -------1.80 (ESCARPMENT)

ZONE	NET PRESSURE	REMARKS
1	-81.90 PSF	–
2	-57.00 PSF	–

a = 6 FT.

FIG.

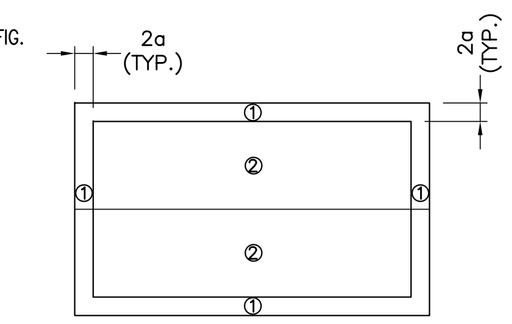

4. SEISMIC LOAD
   - A.) AS PER IBC 2009 ZONE CATEGORY D
   - B.) IMPORTANCE FACTOR ------- Ie = 1.00
5. SOIL CAPACITIES PER GEO ENGINEERING AND TESTING INC.
   - A.) DL + LL ---------- 4,000 PSF
   - B.) DL + LL + E or W ---------- 6,000 PSF
   - C.) DIFF. SETTLEMENT---------- 1/2"
   - D.) COEFFICIENT OF FRICTION---------- μ = 0.30

FINAL RFP SUBMITTAL

GRAPHIC SCALE:

THE CONTRACTOR SHALL BE RESPONSIBLE FOR COORDINATING THE WORK AMONG THE VARIOUS TRADES AS NECESSARY TO AVOID CONFLICTS AND TO INSURE THE INSTALLATION OF ALL WORK WITHIN THE AVAILABLE SPACE.

SYM.	DESCRIPTION	DATE	APPR

N.C. MACARIO & ASSOCIATES, INC.
P.O. Box 784 Agana, Guam 96910
Tel. 646-0947/48 Fax: 646-0901
Email: ncma@guam.net

SEAL

SUBMITTED BY
N.C. MACARIO & ASSOCIATES, INC.
FIRM MEMBER
NCM DATE ------
APPROVED
ACTIVITY – SATISFACTORY TO DATE
APPROVED
FOR COMMANDER NAVFAC PACIFIC DATE
DES DR
CHK QC
CH ENG
REVIEWED BY
PDE
INIT. BRANCH MANAGER
FIRE PROTECTION
BRANCH MANAGER
DESIGN DIRECTOR

NAVAL FACILITIES ENGINEERING COMMAND
NAVFAC MARIANAS
SUMAY, GUAM

TITLE/LOCATION:
FY12 MCAF PROJECT SAKW059101
PRTC REDHORSE CANTONMENT OPERATIONS FACILITY,
ANDERSEN AIR FORCE BASE GUAM

SHEET CONTENT:
STRUCTURAL NOTES

CODE ID. NO. 80091 SIZE D
SCALE: AS SHOWN
CONST. CONTR. NO. 000000-00-0-0000
SPEC. NO. 00-00-0000
NAVFAC DRAWING NO.
SHEET 16 OF 3611
S-1

DRAWFORM REVISION JUL 2009

MEMBER LIST

MARK	SIZE	REMARKS
F1/F3	1800mm x 1800mm x 380mm (t)	
F2	1060mm x 1060mm x 380mm (t)	
C1/C3	400mm x 400mm	
C2	200mm x 600mm	
WF1	1060mm x L (CONT.) x 380mm (t)	
WF2	1060mm x L (CONT.) x 300mm (t)	
WF3	900mm x L (CONT.) x 300mm (t)	
WF4	900mm x L (CONT.) x 300mm (t)	
WF5	900mm x L (CONT.) x 300mm (t)	
W1	200mm	P/C WALL
W2	200mm	P/C WALL
W3	200mm	P/C WALL
W4	200mm	CMU
W5	200mm	CMU

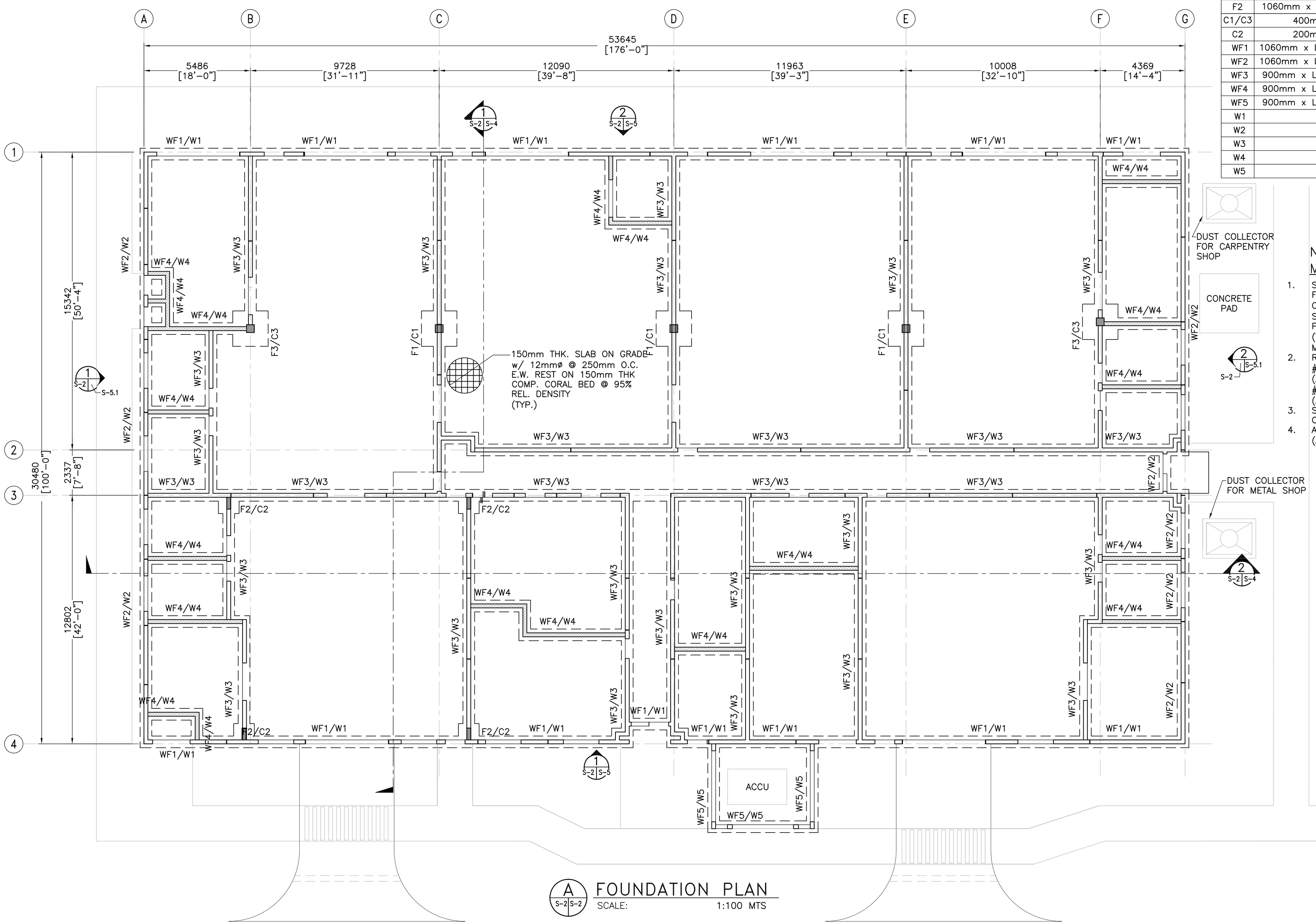

NOTES:

MATERIAL STRESSES

1. STRUCTURAL CONCRETE
   FOOTINGS,WALL FOOTINGS,
   CIP WALLS ------ f'c = 4000 psi
   SLABS ON GRADE -- f'c = 4000 psi
   PRECAST MEMBERS
   (TILT-UP WALLS) --- f'c = 5000 psi
   MASONRY -------- f'm = 1350 psi
2. REINFORCING BARS
   #3 AND #4 BARS -- fy = 40,000 psi
   (ASTM A615)
   #5 TO #8 BARS --- fy = 60,000 psi
   (ASTM A615)
3. STRUCTURAL STEEL
   OPEN WEB JOIST --- Fy = 50 ksi
4. ALLOWABLE SOIL BEARING CAPACITY
   (ASSUMED) ------ 3000 PSF

A S-2 S-2 FOUNDATION PLAN
SCALE: 1:100 MTS

FINAL RFP SUBMITTAL

GRAPHIC SCALE:

0 1 2 3 4 5
1:100 METERS

THE CONTRACTOR SHALL BE RESPONSIBLE FOR COORDINATING THE WORK AMONG THE VARIOUS TRADES AS NECESSARY TO AVOID CONFLICTS AND TO INSURE THE INSTALLATION OF ALL WORK WITHIN THE AVAILABLE SPACE.

SYM.	DESCRIPTION	DATE	APPR

N.C. MACARIO & ASSOCIATES, INC.
P.O. Box 784 Agana, Guam 96910
Tel. 646-0947/48 Fax: 646-0901
Email: ncma@guam.net

SEAL

SUBMITTED BY
N.C. MACARIO & ASSOCIATES, INC.

FIRM MEMBER
NCM DATE ------

APPROVED

ACTIVITY - SATISFACTORY TO DATE

APPROVED

FOR COMMANDER NAVFAC PACIFIC DATE

DES	DR
CHK	QC

CH ENG
REVIEWED BY
PDE
INIT. BRANCH MANAGER
FIRE PROTECTION
BRANCH MANAGER
DESIGN DIRECTOR

NAVAL FACILITIES ENGINEERING COMMAND
NAVFAC MARIANAS
SUMAY, GUAM

TITLE/LOCATION:
FY12 MCAF PROJECT SAKW059101
PRTC - REDHORSE CANTONMENT OPERATIONS FACILITY,
ANDERSEN AIR FORCE BASE GUAM

SHEET CONTENT:
FOUNDATION PLAN

CODE ID. NO. 80091 SIZE D
SCALE: AS SHOWN
CONST. CONTR. NO. 000000-00-0-0000
SPEC. NO. 00-00-0000
NAVFAC DRAWING NO.

SHEET 17 OF 31

S-2

DRAWFORM REVISION JUL 2009

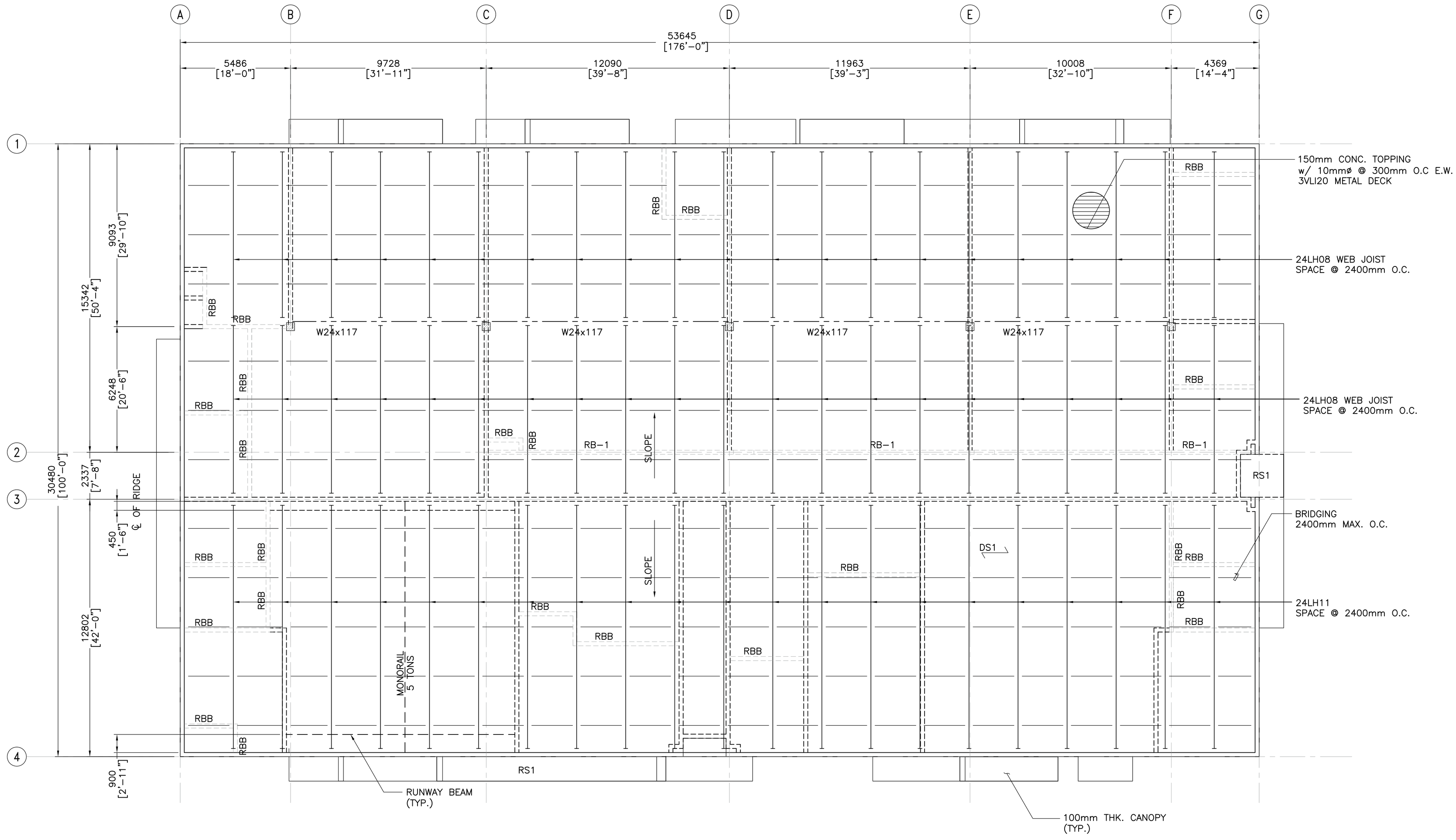

A
S-3 | S-3

ROOF FRAMING PLAN

SCALE: 1:100 MTS

MEMBER LIST

MARK	SIZE	REMARKS
DS1	–	–
RS1		
24LH08		OPEN WEB
24LH11		OPEN WEB
GIRDER	W24x117	
RBB	200mm x 250mm	
RB1	300mm x 400mm	

FINAL RFP SUBMITTAL

GRAPHIC SCALE:

0 1 2 3 4 5

1:100 METERS

THE CONTRACTOR SHALL BE RESPONSIBLE FOR COORDINATING THE WORK AMONG THE VARIOUS TRADES AS NECESSARY TO AVOID CONFLICTS AND TO INSURE THE INSTALLATION OF ALL WORK WITHIN THE AVAILABLE SPACE.

MARK	DESCRIPTION	DATE	APPR

N.C. MACARIO & ASSOCIATES, INC.
P.O. Box 784 Agana, Guam 96910
Tel. 646-0947/48 Fax: 646-0901
Email: ncma@guam.net

SEAL

SUBMITTED BY
N.C. MACARIO & ASSOCIATES, INC.

FIRM MEMBER
NCM DATE

APPROVED

ACTIVITY – SATISFACTORY TO DATE

APPROVED

FOR COMMANDER NAVFAC PACIFIC DATE

DES | DR
CHK | QC
CH ENG
REVIEWED BY
PDE
INIT. BRANCH MANAGER
FIRE PROTECTION
BRANCH MANAGER
DESIGN DIRECTOR

NAVAL FACILITIES ENGINEERING COMMAND
NAVFAC MARIANAS
SUMAY, GUAM

TITLE/LOCATION:
FY12 MCAF PROJECT SAKW059101
PRTC REDHORSE CANTONMENT OPERATIONS FACILITY,
ANDERSEN AIR FORCE BASE GUAM

SHEET CONTENT:
ROOF FRAMING PLAN

CODE ID. NO. 80091 | SIZE D
SCALE: AS SHOWN
CONST. CONTR. NO. 000000-00-0-0000
SPEC. NO. 00-00-0000
NAVFAC DRAWING NO.
SHEET 18 OF 31
S-3

DRAWFORM REVISION JUL 2009

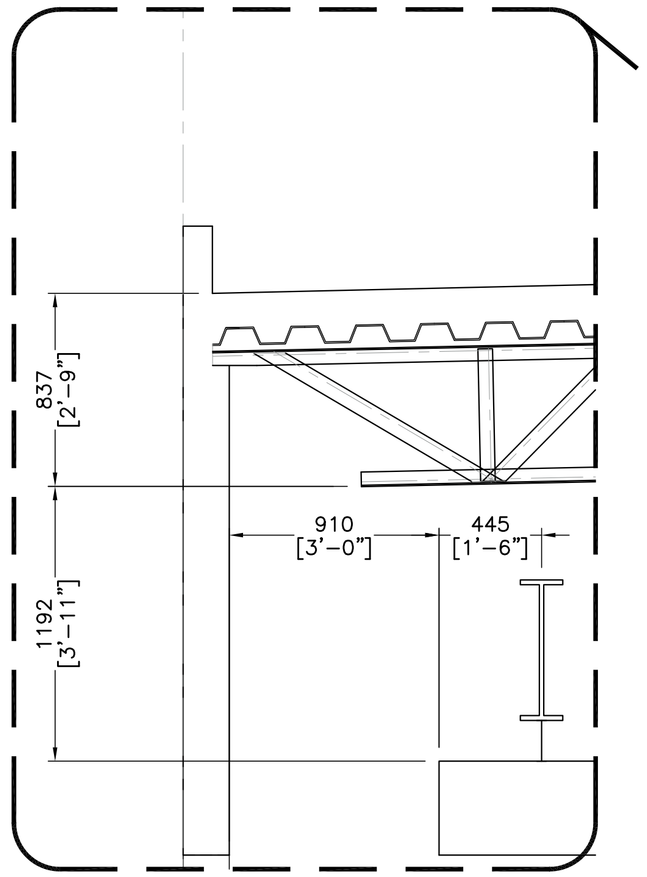

1A S-4 S-4 DETAIL
SCALE: 1:20 MTS

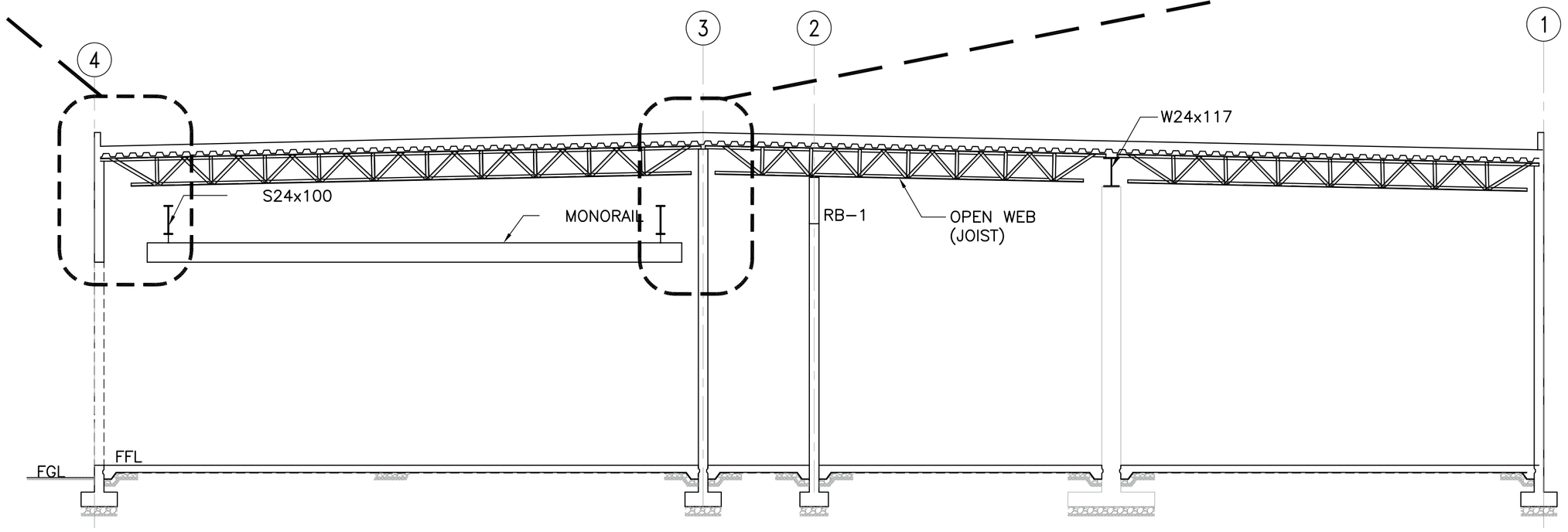

1 S-2 S-4 SECTION
SCALE: 1:75 MTS

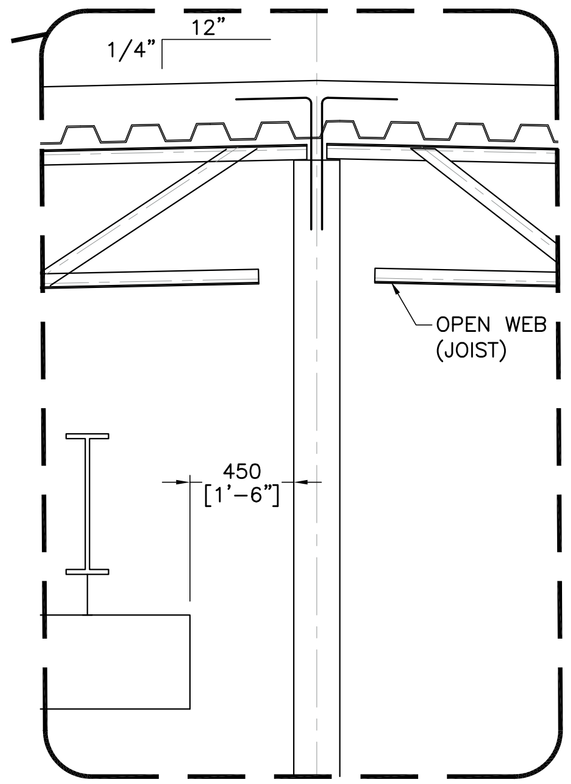

1B S-4 S-4 DETAIL
SCALE: 1:20 MTS

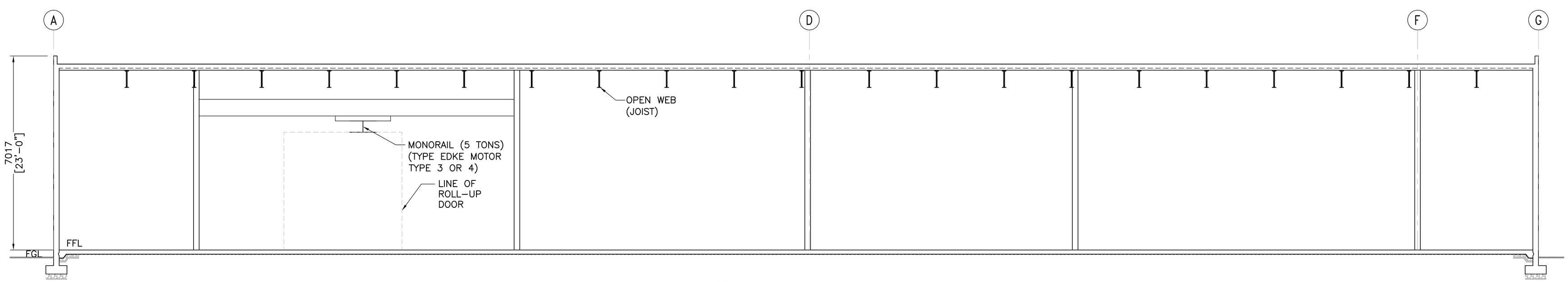

2 S-2 S-4 SECTION
SCALE: 1:75 MTS

GRAPHIC SCALE:

0 1 2 — 1:75 METERS
0 .5 — 1:20 METERS

THE CONTRACTOR SHALL BE RESPONSIBLE FOR COORDINATING THE WORK AMONG THE VARIOUS TRADES AS NECESSARY TO AVOID CONFLICTS AND TO INSURE THE INSTALLATION OF ALL WORK WITHIN THE AVAILABLE SPACE.

FINAL RFP SUBMITTAL

SYM.	DESCRIPTION	DATE	APPR

N.C. MACARIO & ASSOCIATES, INC.
P.O. Box 784 Agana, Guam 96910
Tel. 646-0947/48 Fax: 646-0901
Email: ncma@guam.net

SEAL

SUBMITTED BY
N.C. MACARIO & ASSOCIATES, INC.
FIRM MEMBER
NCM DATE ------
APPROVED
ACTIVITY - SATISFACTORY TO DATE
APPROVED
FOR COMMANDER NAVFAC PACIFIC DATE

DES	DR
CHK	QC
CH ENG	
REVIEWED BY	
PDE	
INIT. BRANCH MANAGER	
FIRE PROTECTION	
BRANCH MANAGER	
DESIGN DIRECTOR	

NAVAL FACILITIES ENGINEERING COMMAND
NAVFAC MARIANAS
SUMAY, GUAM

TITLE/LOCATION:
FY12 MCAF PROJECT SAKW059101
PRTC - REDHORSE CANTONMENT OPERATIONS FACILITY,
ANDERSEN AIR FORCE BASE GUAM

SHEET CONTENT:
SECTION/DETAILS

CODE ID. NO. 80091 SIZE D
SCALE: AS SHOWN
CONST. CONTR. NO. 000000-00-0-0000
SPEC. NO. 00-00-0000
NAVFAC DRAWING NO.
SHEET 19 OF 31
S-4

DRAWFORM REVISION JUL 2009

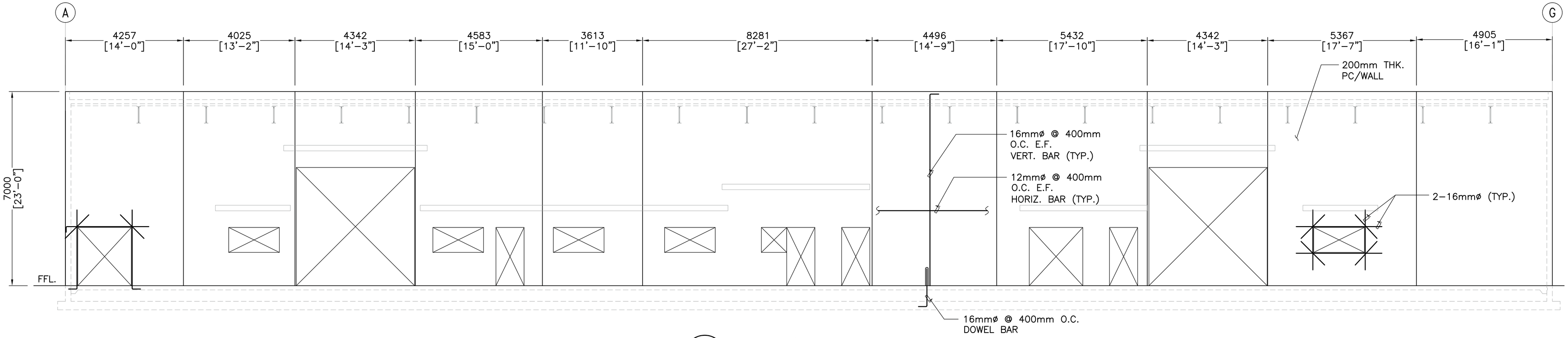

1 S–2 S–5 SOUTH ELEVATION
SCALE: 1:75 MTS

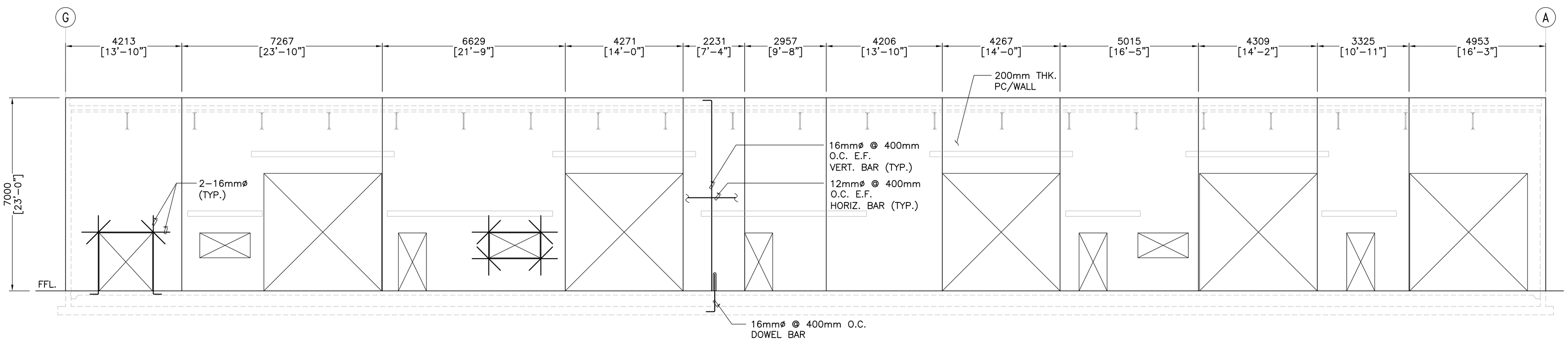

2 S–2 S–5 NORTH ELEVATION
SCALE: 1:75 MTS

GRAPHIC SCALE:
0 1 2
1:75 METERS

THE CONTRACTOR SHALL BE RESPONSIBLE FOR COORDINATING THE WORK AMONG THE VARIOUS TRADES AS NECESSARY TO AVOID CONFLICTS AND TO INSURE THE INSTALLATION OF ALL WORK WITHIN THE AVAILABLE SPACE.

FINAL RFP SUBMITTAL

SYM.	DESCRIPTION	DATE	APPR

N.C. MACARIO & ASSOCIATES, INC.
P.O. Box 784 Agana, Guam 96910
Tel. 646-0947/48 Fax: 646-0901
Email: ncma@guam.net

SEAL

SUBMITTED BY
N.C. MACARIO & ASSOCIATES, INC.
FIRM MEMBER
NCM DATE ------
APPROVED
ACTIVITY – SATISFACTORY TO DATE
APPROVED
FOR COMMANDER NAVFAC PACIFIC DATE
DES DR
CHK QC
CH ENG
REVIEWED BY
PDE
INIT. BRANCH MANAGER
FIRE PROTECTION
BRANCH MANAGER
DESIGN DIRECTOR

NAVFAC
NAVAL FACILITIES ENGINEERING COMMAND
NAVFAC MARIANAS
SUMAY, GUAM

TITLE/LOCATION:
FY12 MCAF PROJECT SAKW059101
PRTC – REDHORSE CANTONMENT OPERATIONS FACILITY,
ANDERSEN AIR FORCE BASE GUAM

SHEET CONTENT:
ELEVATIONS

CODE ID. NO. 80091 SIZE D
SCALE: AS SHOWN
CONST. CONTR. NO. 000000–00–0–0000
SPEC. NO. 00–00–0000
NAVFAC DRAWING NO.
SHEET 20 OF 31
S–5

DRAWFORM REVISION JUL 2009

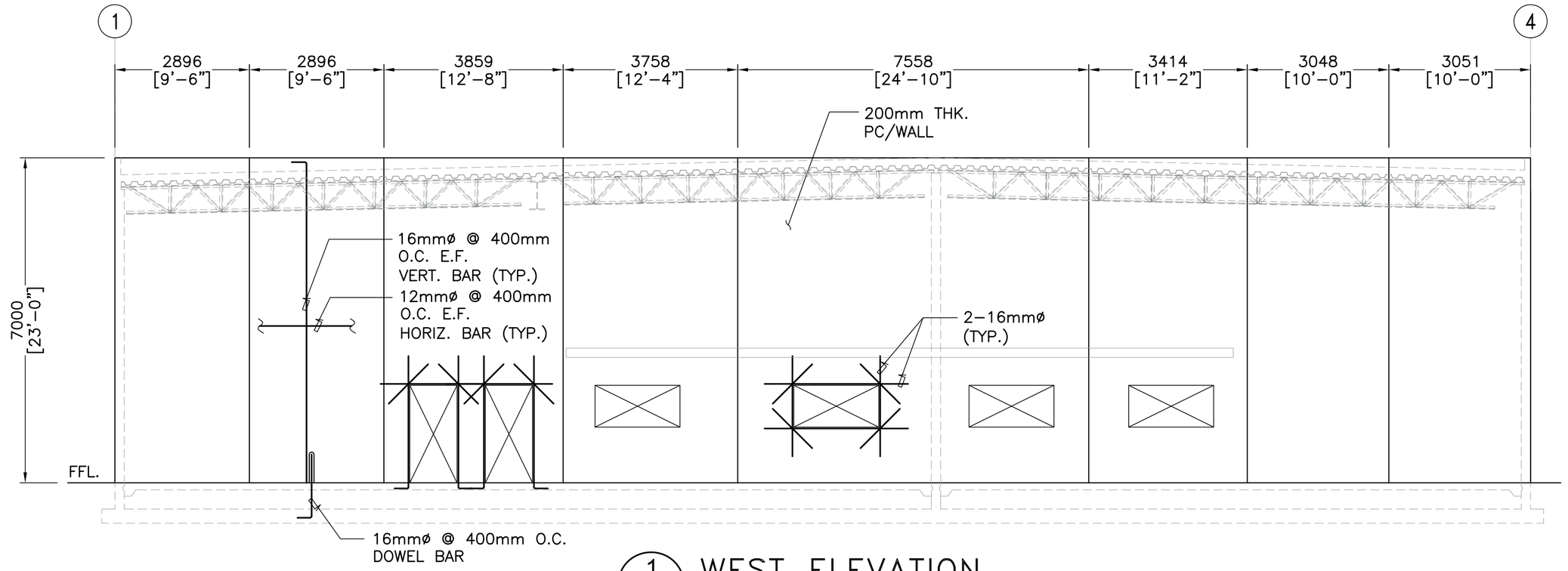

1 S-2 S-5.1 WEST ELEVATION
SCALE: 1:75 MTS

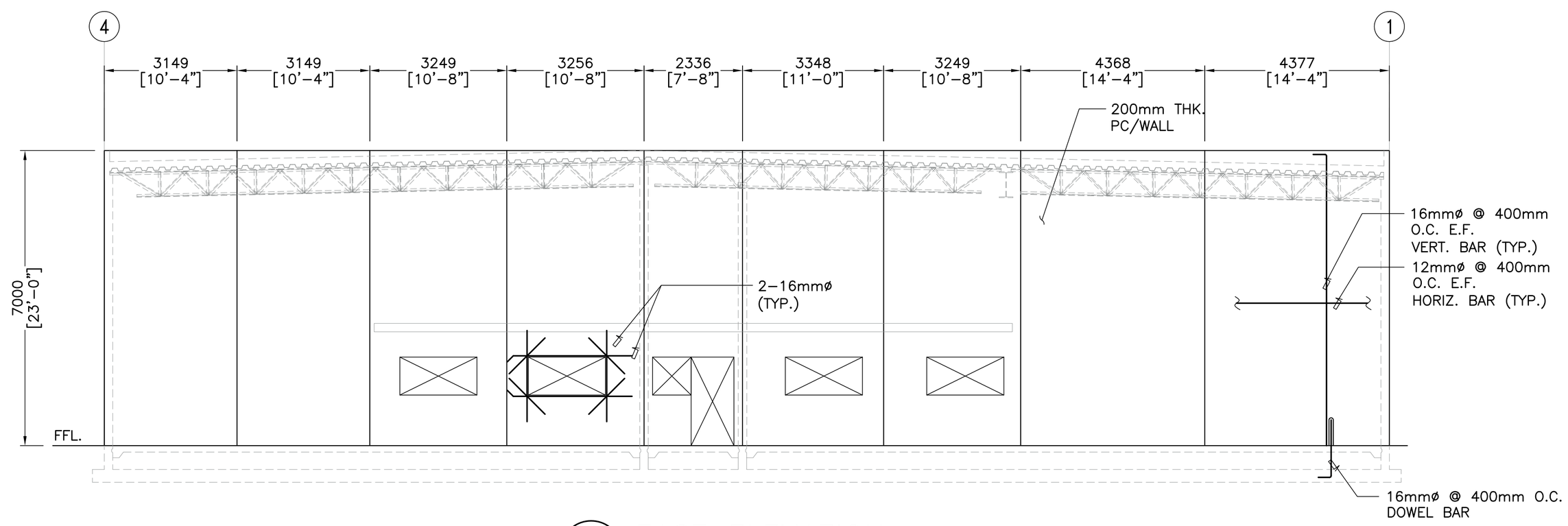

2 S-2 S-5.1 EAST ELEVATION
SCALE: 1:75 MTS

GRAPHIC SCALE:

0 1 2
1:75 METERS

THE CONTRACTOR SHALL BE RESPONSIBLE FOR COORDINATING THE WORK AMONG THE VARIOUS TRADES AS NECESSARY TO AVOID CONFLICTS AND TO INSURE THE INSTALLATION OF ALL WORK WITHIN THE AVAILABLE SPACE.

FINAL RFP SUBMITTAL

SYM.	DESCRIPTION	DATE	APPR

N.C. MACARIO & ASSOCIATES, INC.
P.O. Box 784 Agana, Guam 96910
Tel. 646-0947/48 Fax: 646-0901
Email: ncma@guam.net

SEAL

SUBMITTED BY
N.C. MACARIO & ASSOCIATES, INC.
FIRM MEMBER
NCM DATE ------
APPROVED
ACTIVITY - SATISFACTORY TO DATE
APPROVED
FOR COMMANDER NAVFAC PACIFIC DATE

DES	DR
CHK	QC
CH ENG	
REVIEWED BY	
PDE	
INIT. BRANCH MANAGER	
FIRE PROTECTION	
BRANCH MANAGER	
DESIGN DIRECTOR	

NAVAL FACILITIES ENGINEERING COMMAND
NAVFAC MARIANAS
SUMAY, GUAM

TITLE/LOCATION:
FY12 MCAF PROJECT SAKW059101
PRTC - REDHORSE CANTONMENT OPERATIONS FACILITY,
ANDERSEN AIR FORCE BASE GUAM

SHEET CONTENT:
ELEVATIONS

CODE ID. NO. 80091 SIZE D
SCALE: AS SHOWN
CONST. CONTR. NO. 000000-00-0-0000
SPEC. NO. 00-00-0000
NAVFAC DRAWING NO.
SHEET 21 OF 31
S-5.1

DRAWFORM REVISION JUL 2009

GENERAL NOTES:

1. INFORMATION ON THE DRAWING IS SCHEMATIC. DESIGN–BUILD CONTRACTOR SHALL DETERMINE ACTUAL ROUTING, LOCATIONS, AND COORDINATE WITH APPROPRIATE DISCIPLINES. ALL WORK SHALL COMPLY WITH UFC 4–010–01, UFC 3–600–10N, UFC 4–021–01,NFPA 101, NFPA 13, NFPA 72 AND THE RFP REQUIREMENTS.
2. DESIGN BUILD CONTRACTOR SHALL PERFORM FIRE HYDRANT FLOW TEST AFTER INSTALLATION OF THE NEW WATER SYSTEM AND BASE THE FIRE SPRINKLER SYSTEM DESIGN IN THE FLOW TEST RESULT.
3. PROVIDE FIRE EXTINGUISHERS THROUGHOUT THE BUILDING PER NFPA 10 AND UFC–3–600–10N.
4. SPRINKLER DESIGN CRITERIA :

   LIGHT HAZARD AREAS WET SPRINKLER SYSTEM(MAJORITY AREAS):
   DENSITY : 4.1 LPM / SM. (0.10 GPM / SQ. FT.)

   ORDINARY HAZARD GROUP 2 WET SPRINKLER SYSTEM(SHOP & STORAGE AREAS):
   DENSITY : 8.2 LPM / SM. (0.20 GPM / SQ. FT.)

   MAJORITY OF THE AREAS ARE LIGHT HAZARD EXCEPT FOR SHOP AREAS, STORAGE AND MECHANICAL & ELECTRICAL ROOMS.

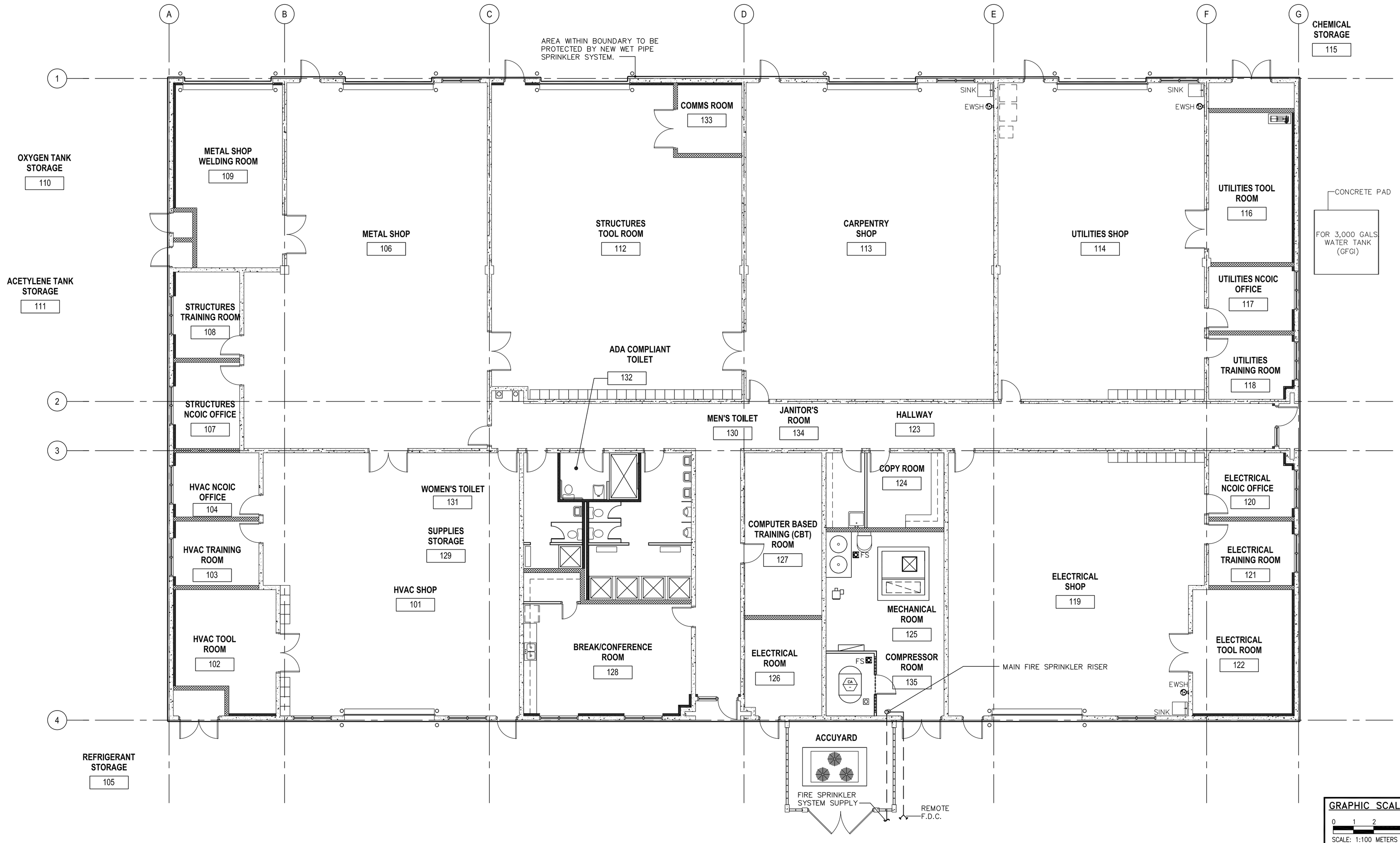

1 FS–1 FS–1 FIRE SPRINKLER PLAN (REDHORSE CANTONMENT FACILITY)

SCALE: 1:100 M

FINAL RFP SUBMITTAL

GRAPHIC SCALE:

0 1 2 5

SCALE: 1:100 METERS

THE CONTRACTOR SHALL BE RESPONSIBLE FOR COORDINATING THE WORK AMONG THE VARIOUS TRADES AS NECESSARY TO AVOID CONFLICTS AND TO INSURE THE INSTALLATION OF ALL WORK WITHIN THE AVAILABLE SPACE.

MKS	DESCRIPTION	DATE	APPR

N.C. MACARIO & ASSOCIATES, INC.
P.O. Box 784 Agana, Guam 96910
Tel. 646–0947/48 Fax: 646–0901
Email: ncma@guam.net

SEAL

SUBMITTED BY
N.C. MACARIO & ASSOC.

FIRM MEMBER
NCM DATE ------

APPROVED

ACTIVITY – SATISFACTORY TO DATE

APPROVED

FOR COMMANDER NAVFAC PACIFIC DATE

DES	WGM	DR	WMES
CHK	WGM	QC	WGM

CH ENG
REVIEWED BY
PDE
INIT. BRANCH MANAGER
FIRE PROTECTION
BRANCH MANAGER
DESIGN DIRECTOR

NAVAL FACILITIES ENGINEERING COMMAND
NAVFAC MARIANAS
SUMAY, GUAM

TITLE/LOCATION:
FY12 MCAF PROJECT SAKW059101
PRTC – REDHORSE CANTONMENT OPERATIONS FACILITY,
ANDERSEN AIR FORCE BASE GUAM

SHEET CONTENT: FIRE SPRINKLER PLAN LAYOUT

CODE ID. NO. 80091 | SIZE D

SCALE: AS SHOWN

CONST. CONTR. NO. 000000–00–0–0000

SPEC. NO. 00–00–0000

NAVFAC DRAWING NO.

SHEET 22 OF 31

FS-1

DRAWFORM REVISION JUL 2009

LEGEND + ABBRV.

SYMBOL	ABBR	DESCRIPTION	SYMBOL	ABBR	DESCRIPTION	SYMBOL	ABBR	DESCRIPTION
ACU	ACCU	AIR COOLED CONDENSING UNIT		V.D.	MANUAL VOLUME DAMPER		OAD	OUTSIDE AIR DUCT
AHU	AHU	AIR HANDLING UNIT	M		MOTORIZED DAMPER		PRESS	PRESSURE
EF	EF	EXHAUST FAN	SD		DUCT SMOKE DETECTOR		RAD	RETURN AIR DUCT
FCU	FCU	FAN COIL UNIT		°F	DEGREES FAHRENHEIT		RS/RL	REFRIGERANT PIPING (SUCTION & LIQUID LINES)
VAV	VAV	VARIABLE AIR VOLUME BOX		CO2	CARBON DIOXIDE		SAD	SUPPLY AIR DUCT
T		THERMOSTAT		DL	DOOR LOUVER		VAV	VARIABLE AIR VOLUME
PS		PRESSURE SENSOR		DDC	DIRECT DIGITAL CONTACT		VD	VOLUME DAMPER
		DUCT SILENCER/ ATTENUATOR		GALS	GALLONS		VFD	VARIABLE FREQUENCY DRIVE
	F.D.	FIRE DAMPER		OA	OUTSIDE AIR			

GENERAL NOTES:

1. CONFORM TO ALL REQUIREMENTS OF THE BUILDING, MECHANICAL AND ELECTRICAL CODES, U.S. NAVY REGULATIONS, AND OTHER APPLICABLE REGULATIONS FOR THE PROJECT.
2. INSTALLATION SHALL BE GUARANTEED TO BE FREE FROM DEFECTS FOR ONE YEAR FROM DATE OF FINAL ACCEPTANCE OF THE PROJECT AS A WHOLE.
3. CONTRACTOR SHALL VERIFY ALL FIELD CONDITIONS PRIOR TO BID AND CONSTRUCTION.
4. COORDINATE ALL WORK WITH OTHER TRADES TO AVOID INTERFERENCES AND DELAYS.
5. PAY FOR ALL PERMIT FEES AND APPLICATIONS.
6. PROVIDE ADDITIONAL MATERIALS AND LABOR FOR A COMPLETE OPERABLE SYSTEM AT NO EXTRA COST TO THE OWNER.
7. PROVIDE ACCESS PANELS FOR ALL ITEMS UNDER THIS SECTION REQUIRING SERVICING, INSPECTION, MAINTENANCE AND ADJUSTMENT.
8. THE INSTALLATION SHALL CONFORM TO THE LATEST APPLICABLE INDUSTRY STANDARDS UNLESS SPECIFICALLY NOTED OTHERWISE.
9. AVOID DIRECT OR INDIRECT CONTACT OR CONNECTION OF DISSIMILAR METALS TO PREVENT GALVANIC REACTION. WHEN REQUIRED PROVIDE DI-ELECTRIC SEPARATION OR CONNECTION IN BETWEEN DISSIMILAR METALS.

NOTES:

1. DDC CONTROL SYSTEM SHALL INCLUDE PROVISION FOR FUTURE CONNECTION TO CENTRALIZED BUILDING MANAGEMENT SYSTEM.
2. DUCT PENETRATION THRU SECURE ROOMS (COM SEC VAULT AND COMM ROOM) SHALL BE PROVIDED WITH SECURITY BARS AND GRILLES, IN ACCORDDANCE WITH MIL-HANDBK 1013/1A REQUIREMENTS.
3. MAINTAIN NEGATIVE PRESSURE INSIDE THE MAIL ROOM, WITH RESPECT TO THE REMAINDER OF THE BUILDING SPACES.
4. FCUSHALL SERVE AS AN AUXILLIARY COOLING UNIT. IT SHALL BE SIZED TO SUPPLEMENT THE SUPPLY FROM THE MAIN AHU TO ATTAIN THE LOWER TEMP. & HUMIDITY REQUIRED BY THE COMM ROOM, AND SERVE AS A BACK-UP UNIT IF AHU. FAILS OR IS DOWN FOR MAINTENANCE. MAINTAIN POSITIVE PESSURE IN THE COMM ROOM WITH MINIMUM 1-AIR CHANGE PER HOUR.
5. MECHANICAL LAYOUT SHOWN IS CONCEPTUAL ONLY, DESIGN-BUILD CONTRACTOR SHALL ENSURE ADEQUACY OF MECHANICAL SYSTEM DESIGN. COORDINATE CEILING DIFFUSER & REGISTER LAYOUT WITH ARCHITECTURAL CEILING PLANS. COORDINATE THERMOSTAT LOCATIONS WITH FURNITURE LAYOUT. COORDINATE DUCT LAYOUT WITH STRUCTURAL DRAWINGS. VERIFY ACTUAL EQUIPMENT HEAT LOADS AND OCCUPANCY LEVELS.
6. MAIL ROOM VENTILATION NOTES: EXHAUST FAN SHALL OPERATE CONTINUOUSLY TO MAINTAIN SLIGHT NEGATIVE PRESSURE WITHIN THE MAIL ROOM, WITH RESPECT TO THE ADJOINING ROOMS & CORRIDOR. EXHAUST FAN CONTROL PANEL SHALL INCLUDE "FAN" RUNNING INDICATOR LIGHT AND "FAN FAILURE TO RUN" ALARM. IN THE EVENT OF A SUSPECTED OR ACTUAL CHEMICAL, BIOLOGICAL OR RADIOLOGICAL RELEASE, A SEPARATE SWITCH SHALL ISOLATE THE MAIL ROOM BY CLOSING THE LOW LEAKAGE DAMPER IN THE SUPPLY DUCTWORK LEADING TO THE MAIL ROOM. INTERLOCK WITH BUILDING ALARM SYSTEM, COORDINATE WITH GENERAL CONTRACTOR.

FINAL RFP SUBMITTAL

GRAPHIC SCALE:

0 1 2 5

SCALE: 1:100 METERS

THE CONTRACTOR SHALL BE RESPONSIBLE FOR COORDINATING THE WORK AMONG THE VARIOUS TRADES AS NECESSARY TO AVOID CONFLICTS AND TO INSURE THE INSTALLATION OF ALL WORK WITHIN THE AVAILABLE SPACE.

SYM.	DESCRIPTION	DATE	APPR

N.C. MACARIO & ASSOCIATES, INC.
P.O. Box 784 Agana, Guam 96910
Tel. 646-0947/48 Fax: 646-0901
Email: ncma@guam.net

SEAL

SUBMITTED BY
N.C. MACARIO & ASSOC.

FIRM MEMBER
NCM DATE ------

APPROVED

ACTIVITY - SATISFACTORY TO
DATE

APPROVED

FOR COMMANDER NAVFAC PACIFIC
DATE

DES	WGM	DR	WMES
CHK	WGM	QC	WGM

CH ENG
REVIEWED BY
PDE
INIT. BRANCH MANAGER
FIRE PROTECTION
BRANCH MANAGER
DESIGN DIRECTOR

NAVAL FACILITIES ENGINEERING COMMAND
NAVFAC MARIANAS
SUMAY, GUAM

TITLE/LOCATION:
FY12 MCAF PROJECT SAKW059101
PRTC - REDHORSE CANTONMENT OPERATIONS FACILITY,
ANDERSEN AIR FORCE BASE GUAM

SHEET CONTENT:
LEGENDS, ABBREVIATIONS, GENERAL NOTES AND NOTES

CODE ID. NO. 80091 SIZE D
SCALE: AS SHOWN
CONST. CONTR. NO.
000000-00-0-0000
SPEC. NO. 00-00-0000
NAVFAC DRAWING NO.

SHEET 25 OF 31

M-1

DRAWFORM REVISION JUL 2009

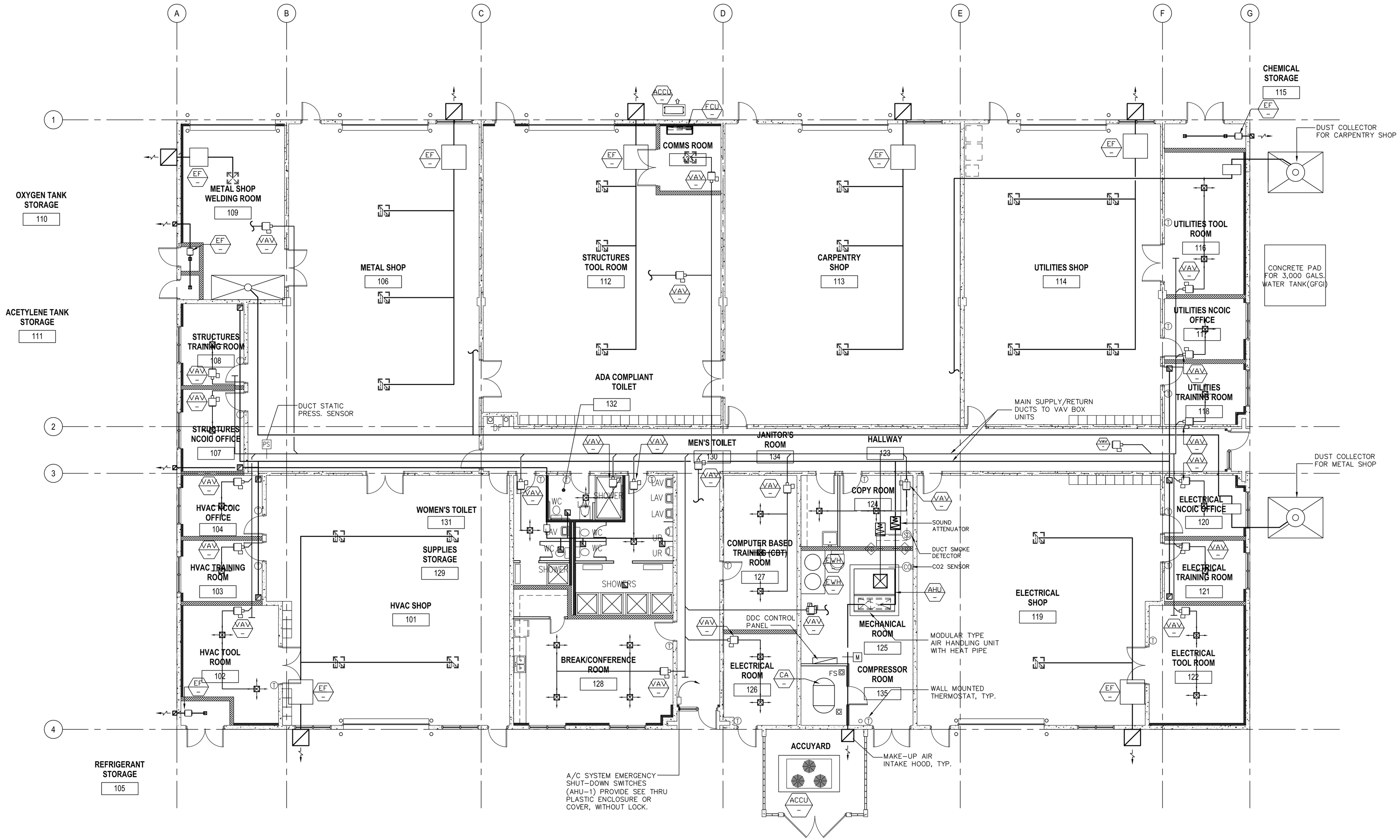

1 M-2 M-2 MECHANICAL PLAN (REDHORSE CANTONMENT FACILITY)

SCALE: 1:100 M

FINAL RFP SUBMITTAL

GRAPHIC SCALE:

0 1 2 5

SCALE: 1:100 METERS

THE CONTRACTOR SHALL BE RESPONSIBLE FOR COORDINATING THE WORK AMONG THE VARIOUS TRADES AS NECESSARY TO AVOID CONFLICTS AND TO INSURE THE INSTALLATION OF ALL WORK WITHIN THE AVAILABLE SPACE.

SYM.	DESCRIPTION	DATE	APPR.

N.C. MACARIO & ASSOCIATES, INC.
P.O. Box 784 Agana, Guam 96910
Tel. 646-0947/48 Fax: 646-0901
Email: ncma@guam.net

SEAL

SUBMITTED BY
N.C. MACARIO & ASSOC.
FIRM MEMBER
NCM DATE ------
APPROVED

ACTIVITY - SATISFACTORY TO DATE
APPROVED

FOR COMMANDER NAVFAC PACIFIC DATE

DES	WGM	DR	WMES
CHK	WGM	QC	WGM
CH ENG			
REVIEWED BY			
PDE			
INIT. BRANCH MANAGER			
FIRE PROTECTION			
BRANCH MANAGER			
DESIGN DIRECTOR			

NAVAL FACILITIES ENGINEERING COMMAND
NAVFAC MARIANAS
SUMAY, GUAM

TITLE/LOCATION:
FY12 MCAF PROJECT SAKW059101
PRTC
REDHORSE CANTONMENT OPERATIONS FACILITY,
ANDERSEN AIR FORCE BASE GUAM

SHEET CONTENT:
MECHANICAL PLAN LAYOUT

CODE ID. NO. 80091 SIZE D
SCALE: AS SHOWN
CONST. CONTR. NO. 000000-00-0-0000
SPEC. NO. 00-00-0000
NAVFAC DRAWING NO.

SHEET 26 OF 31

M-2

DRAWFORM REVISION JUL 2009

LEGENDS AND ABBREVIATIONS

SYMBOL	ABBR	DESCRIPTION	SYMBOL	ABBR	DESCRIPTION
S—— ——S	S OR W	SOIL OR WASTE LINE, BELOW GRADE		EXIST	EXISTING
S———S	S OR W	SOIL OR WASTE LINE, ABOVE GRADE		EWH	ELECTRIC WATER HEATER
S— — —S	V	VENT LINE		EWSH	EMERGENCY EYE WASH AND SHOWER
S— - —S	CW	COLD WATER LINE		FCO	FLOOR CLEANOUT
S— - - —S	HW	HOT WATER LINE		FD	FLOOR DRAIN
S—⋈—S	GV	GATE VALVE		GALS.	GALLONS
				GCO	GROUND CLEANOUT
	ADA	AMERICANS WITH DISABILITIES ACT		GFGI	GOV'T FURNISH GOV'T INSTALLED
	AHU	AIR HANDLING UNIT		GOV'T	GOVERNMENT
	B.F.P.	BACKFLOW PREVENTER		G.V.	GATE VALVE
	CA	COMPRESSSED AIR		HB	HOSE BIBB
	COMP	COMPRESSOR		MM	MILLIMETER/MILLIMETERS
	CONC.	CONCRETE		OS&Y	OPEN SCREWED AND YOKE
	CONN.	CONNECTION		PDI	PLUMBING DRAINAGE INSTITUTE
	EWH	ELECTRIC WATER HEATER		TYP	TYPICAL
	EWC	ELECTRIC WATER COOLER		VTR	VENT THRU ROOF

PLUMBING FIXTURE SCHEDULE

SYMBOL	DESCRIPTION	CW	HW	WASTE	VENT	REMARKS
EWC	ELECTRIC WATER COOLER	1/2"(15)	–	2"(50)	2"(50)	ADA TYPE
EWSH	EMERGENCY EYE WASH AND SHOWER	1–1/4"(32)	–	2"(50)	2"(50)	–
FS	FLOOR SINK	–	–	2"(50)	2"(50)	–
HB	HOSE BIBB	1/2"(15)	–	–	–	WITH VACCUM BREAKER
JS	JANITOR SINK	1/2"(15)	1/2"(15)	2"(50)	2"(50)	–
LAV	LAVATORY	1/2"(15)	1/2"(15)	2"(50)	2"(50)	ADA TYPE
KS	KITCHEN SINK	1/2"(15)	1/2"(15)	2"(50)	2"(50)	1–COMPARTMENT
SHO	SHOWER	1/2"(15)	1/2"(15)	2"(50)	2"(50)	ADA TYPE
UR	URINAL	3/4"(20)	–	2"(50)	2"(50)	FLUSH VALVE
UR–1	URINAL	3/4"(20)	–	2"(50)	2"(50)	FLUSH VALVE, ADA TYPE
WC	WATER CLOSET	1"(25)	–	4"(100)	2"(50)	FLUSH VALVE TYPE
WC–1	WATER CLOSET	1"(25)	–	4"(100)	2"(50)	FLUSH VALVE, ADA TYPE

GENERAL NOTES:

1. CONFORM TO ALL REQUIREMENTS OF THE BUILDING, MECHANICAL AND ELECTRICAL CODES, U.S. NAVY REGULATIONS, AND OTHER APPLICABLE REGULATIONS FOR THE PROJECT.
2. INSTALLATION SHALL BE GUARANTEED TO BE FREE FROM DEFECTS FOR ONE YEAR FROM DATE OF FINAL ACCEPTANCE OF THE PROJECT AS A WHOLE.
3. CONTRACTOR SHALL VERIFY ALL FIELD CONDITIONS PRIOR TO BID AND CONSTRUCTION.
4. COORDINATE ALL WORK WITH OTHER TRADES TO AVOID INTERFERENCES AND DELAYS.
5. PAY FOR ALL PERMIT FEES AND APPLICATIONS.
6. PROVIDE ADDITIONAL MATERIALS AND LABOR FOR A COMPLETE OPERABLE SYSTEM AT NO EXTRA COST TO THE OWNER.
7. PROVIDE ACCESS PANELS FOR ALL ITEMS UNDER THIS SECTION REQUIRING SERVICING, INSPECTION, MAINTENANCE AND ADJUSTMENT.
8. THE INSTALLATION SHALL CONFORM TO THE LATEST APPLICABLE INDUSTRY STANDARDS UNLESS SPECIFICALLY NOTED OTHERWISE.
9. AVOID DIRECT OR INDIRECT CONTACT OR CONNECTION OF DISSIMILAR METALS TO PREVENT GALVANIC REACTION. WHEN REQUIRED PROVIDE DI–ELECTRIC SEPARATION OR CONNECTION IN BETWEEN DISSIMILAR METALS.

NOTES:

1. PROVIDE FACTORY FABRICATED AND PDI RATED WATER HAMMER ARRESTORS.
2. PLUMBING LAYOUT SHOWN IS CONCEPTUAL ONLY, DESIGN–BUILD CONTRACTOR SHALL ENSURE ADEQUACY OF PLUMBING SYSTEM DESIGN. COORDINATE PLUMBING LAYOUT WITH ARCHITECTURAL, PLUMBING, MECHANICAL & FIRE SPRINKLER PLANS.

FINAL RFP SUBMITTAL

GRAPHIC SCALE:

0 1 2 5

SCALE: 1:100 METERS

THE CONTRACTOR SHALL BE RESPONSIBLE FOR COORDINATING THE WORK AMONG THE VARIOUS TRADES AS NECESSARY TO AVOID CONFLICTS AND TO INSURE THE INSTALLATION OF ALL WORK WITHIN THE AVAILABLE SPACE.

SYM.	DESCRIPTION	DATE	APPR

N.C. MACARIO & ASSOCIATES, INC.
P.O. Box 784 Agana, Guam 96910
Tel. 646–0947/48 Fax: 646–0901
Email: ncma@guam.net

SEAL

SUBMITTED BY
N.C. MACARIO & ASSOC.
FIRM MEMBER
NCM DATE ––––––
APPROVED
ACTIVITY – SATISFACTORY TO DATE
APPROVED
FOR COMMANDER NAVFAC PACIFIC DATE

DES	WGM	DR	WMES
CHK	WGM	QC	WGM

CH ENG
REVIEWED BY
PDE
INIT. BRANCH MANAGER
FIRE PROTECTION
BRANCH MANAGER
DESIGN DIRECTOR

NAVAL FACILITIES ENGINEERING COMMAND
NAVFAC MARIANAS
SUMAY, GUAM

TITLE/LOCATION:
FY12 MCAF PROJECT SAKW059101
PRTC REDHORSE CANTONMENT OPERATIONS FACILITY,
ANDERSEN AIR FORCE BASE GUAM

SHEET CONTENT:
LEGENDS & ABBREVIATIONS, GENERAL NOTES AND PLUMBING FIXTURE SCHED.

CODE ID. NO. 80091 | SIZE D
SCALE: AS SHOWN
CONST. CONTR. NO. 000000–00–0–0000
SPEC. NO. 00–00–0000
NAVFAC DRAWING NO.
SHEET 23 OF 31
P-1

DRAWFORM REVISION JUL 2009

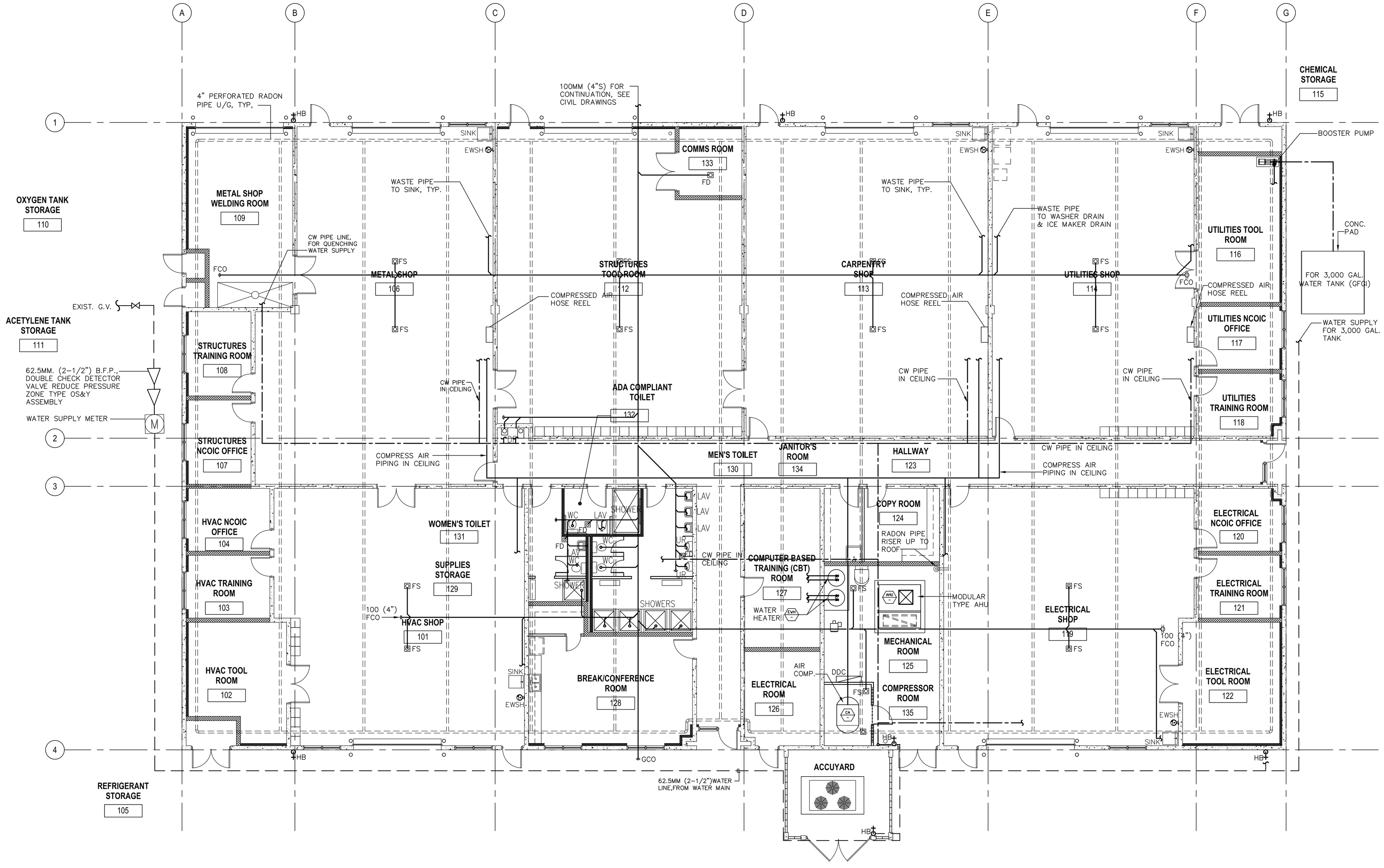

1 P-2 P-2 PLUMBING PLAN (REDHORSE CANTONMENT FACILITY)

SCALE: 1:100 M

GRAPHIC SCALE:

0 1 2 5

SCALE: 1:100 METERS

THE CONTRACTOR SHALL BE RESPONSIBLE FOR COORDINATING THE WORK AMONG THE VARIOUS TRADES AS NECESSARY TO AVOID CONFLICTS AND TO INSURE THE INSTALLATION OF ALL WORK WITHIN THE AVAILABLE SPACE.

FINAL RFP SUBMITTAL

SYM.	DESCRIPTION	DATE	APPR

N.C. MACARIO & ASSOCIATES, INC.
P.O. Box 784 Agana, Guam 96910
Tel. 646-0947/48 Fax: 646-0901
Email: ncma@guam.net

SEAL

SUBMITTED BY
N.C. MACARIO & ASSOC.
FIRM MEMBER
NCM DATE
APPROVED
ACTIVITY - SATISFACTORY TO DATE
APPROVED
FOR COMMANDER NAVFAC PACIFIC DATE

DES	WGM	DR	WMES
CHK	WGM	QC	WGM

CH ENG
REVIEWED BY
PDE
INIT. BRANCH MANAGER
FIRE PROTECTION
BRANCH MANAGER
DESIGN DIRECTOR

NAVAL FACILITIES ENGINEERING COMMAND
NAVFAC MARIANAS
SUMAY, GUAM

TITLE/LOCATION:
FY12 MCAF PROJECT SAKW059101
PRTC - REDHORSE CANTONMENT OPERATIONS FACILITY,
ANDERSEN AIR FORCE BASE GUAM

SHEET CONTENT:
PLUMBING PLAN LAYOUT

CODE ID. NO. 80091 SIZE D
SCALE: AS SHOWN
CONST. CONTR. NO. 000000-00-0-0000
SPEC. NO. 00-00-0000
NAVFAC DRAWING NO.

SHEET 24 OF 31

P-2

DRAWFORM REVISION JUL 2009

ELECTRICAL NOTES:

1. PROVIDE NEW PAD–MOUNTED PRIMARY SWITCH AND ELECTRIC MANHOLE (EMH) FOR INTERCEPTING EXISTING PRIMARY UNDERGROUND FEEDER, AND FOR PROVIDING CIRCUIT SWITCHES TO NEW PAD MOUNTED TRANSFORMER AND FUTURE AND OTHER LOADS.
2. PROVIDE NEW PRIMARY MANHOLE FOR INTERCEPTING/PULLING IN EXISTING PRIMARY UNDERGROUND FEEDER. PROVIDE IN–LINE SPLICES TO EXTEND AND LOOP FEEDER THROUGH NEW PRIMARY SWITCH.

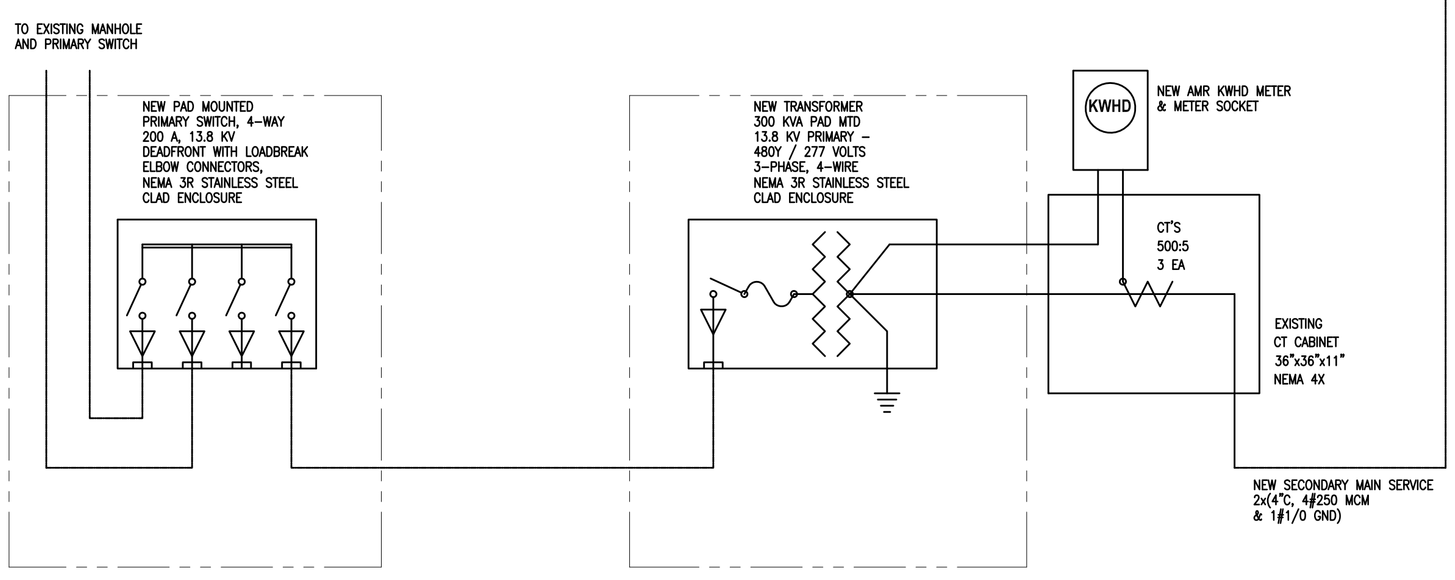

A
E–4 E–4

REDHORSE CANTONMENT FACILITY ELECTRICAL ONE–LINE DIAGRAM

SCALE: NOT TO SCALE

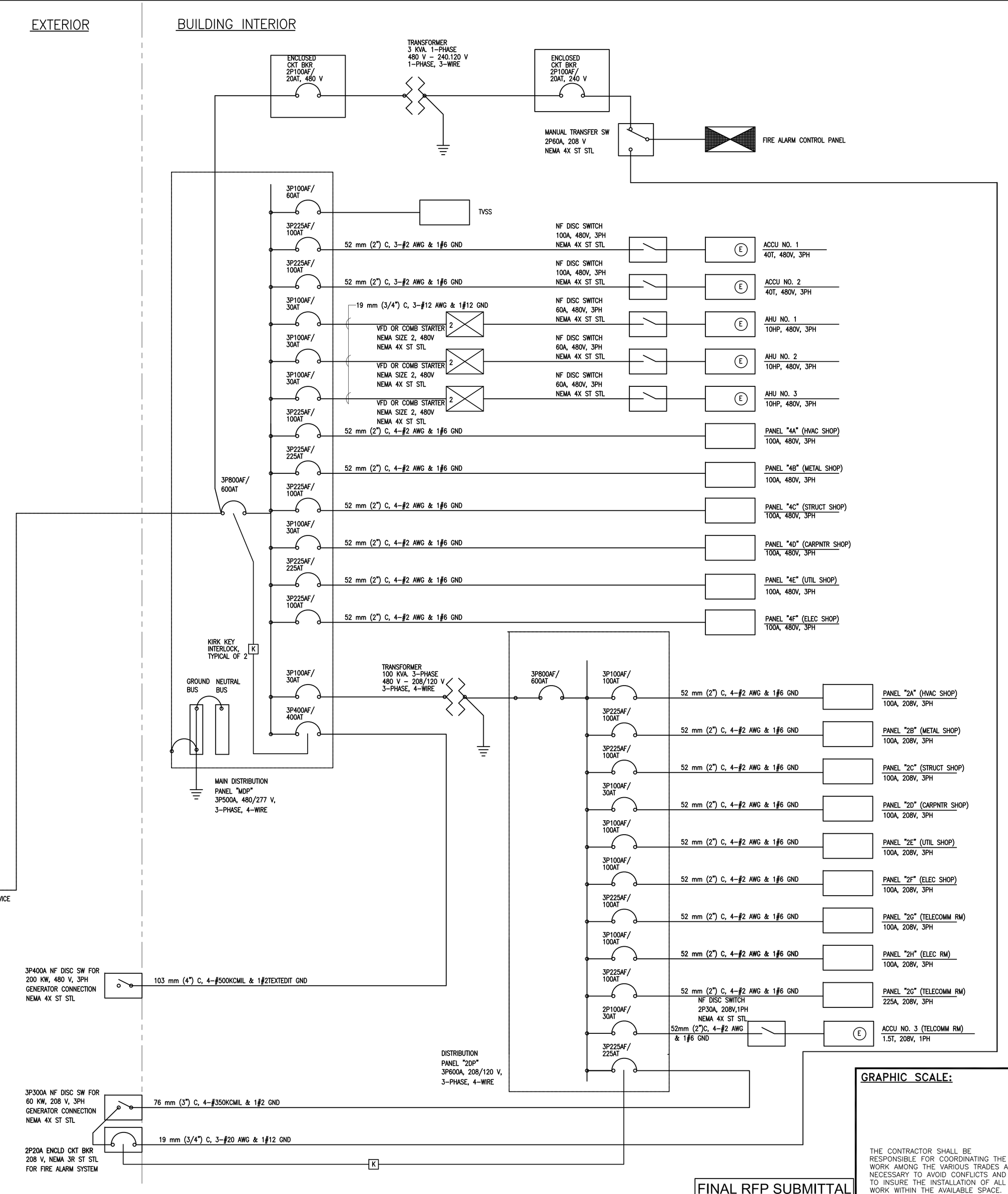

FINAL RFP SUBMITTAL

GRAPHIC SCALE:

THE CONTRACTOR SHALL BE RESPONSIBLE FOR COORDINATING THE WORK AMONG THE VARIOUS TRADES AS NECESSARY TO AVOID CONFLICTS AND TO INSURE THE INSTALLATION OF ALL WORK WITHIN THE AVAILABLE SPACE.

SYM.	DESCRIPTION	DATE	APPR

N.C. MACARIO & ASSOCIATES, INC.
P.O. Box 784 Agana, Guam 96910
Tel. 646–0947/48 Fax: 646–0901
Email: ncma@guam.net

SEAL

SUBMITTED BY
N.C. MACARIO & ASSOCIATES, INC.
FIRM MEMBER
NCM DATE ––––––
APPROVED
ACTIVITY – SATISFACTORY TO DATE
APPROVED
FOR COMMANDER NAVFAC PACIFIC DATE
DES DR
CHK QC
CH ENG
REVIEWED BY
PDE
INIT. BRANCH MANAGER
FIRE PROTECTION
BRANCH MANAGER
DESIGN DIRECTOR

NAVAL FACILITIES ENGINEERING COMMAND
NAVFAC MARIANAS
SUMAY, GUAM

TITLE/LOCATION:
FY12 MCAF PROJECT SAKW059101
PRTC – REDHORSE CANTONMENT OPERATIONS FACILITY,
ANDERSEN AIR FORCE BASE GUAM

SHEET CONTENT:
ELECTRICAL ONE–LINE DIAGRAM

CODE ID. NO. 80091 SIZE D
SCALE: AS SHOWN
CONST. CONTR. NO. 000000–00–0–0000
SPEC. NO. 00–00–0000
NAVFAC DRAWING NO.
SHEET 31 OF 311
E–4

DRAWFORM REVISION JUL 2009

INTERIOR ELECTRICAL SYMBOL LIST

SYMBOL	DESCRIPTION	SYMBOL	DESCRIPTION
	FLUORESCENT LIGHT FIXTURE, WALL MOUNTED	H	H.O.A SELECTOR SWITCH
	FLUORESCENT LIGHT FIXTURE, CEILING PENDANT MOUNTED	DS	DUCT SMOKE DETECTOR
;	FLUORESCENT LIGHT FIXTURE, CEILING MOUNTED		PHOTO CELL
	FLUORESCENT LIGHT FIXTURE, CEILING, RECESSED MOUNTED		COMBINATION SWITCH STARTER
;	CEILING MOUNTED LUMINAIRE, WEATHERPROOF, WALL MOUNTED		KILOWATT HOUR METER
	FLUORESCENT LIGHT FIXTURE, CEILING MOUNTED		
$	TOGGLE LIGHT SWITCH, SPST, 20 A, 125/277 VOLTS		
$3	THREE-WAY TOGGLE LIGHT SWITCH, 20 A, 125/277 VOLTS		
	DUPLEX RECEPTACLE, 15 AMPS, 125 VOLTS, GROUNDING TYPE, SPEC GRADE.		
	GROUND FAULT CIRCUIT INTERRUPTER RECEPTACLE, 15 AMPS, 125 VOLTS, GROUNDING TYPE		
WP	GROUND FAULT CIRCUIT INTERRUPTER RECEPTACLE, 15 AMPS, 125 VOLTS, GROUNDING TYPE, WEATHERPROOF		
	RECEPTACLE, QUADRAPLEX, FLOOR MOUNTED, 15A, 125V, 3-WIRE, GROUNDING TYPE		
	RECEPTACLE, QUADRAPLEX, WALL MOUNTED, 15A, 125V, 3-WIRE, GROUNDING TYPE		
WP	SPECIAL RECEPTACLE WITH MATCHING PLUG, WEATHERPROOF		
	JUNCTION BOX, CEILING MOUNTED		
	JUNCTION BOX, WALL MOUNTED		
	EXIT LIGHT FIXTURE		
	EMERGENCY LIGHT FIXTURE		
M	MOTOR CONNECTION		
E	EQUIPMENT CONNECTION		
	FLEXIBLE CONDUIT		
	DISCONNECT SWITCH, HEAVY DUTY, HP RATED		
	PANELBOARD		
	DATA/TELEPHONE OUTLET, 2 VOICE, 2 DATA(QUADJACK) WALL MOUNTED		
A	IDS ALARM, EMPTY WITH PULL WIRE, WIRING BY OTHERS		
	AIR TERMINAL		
	GROUND ROD		
RC	ROOF CONDUCTOR		
G	GROUND WIRE		
E	STUB OUT		
	FLOOD LIGHT		
A	LIGHT FIXTURE INDICATOR		
T	TIMER		

EXTERIOR ELECTRICAL SYMBOL LIST

EXISTING	NEW	DESCRIPTION	EXISTING	NEW	DESCRIPTION
		UNDERGROUND DUCT(S)			
eC	C	TELECOMUNICATIONS DUCT(S)			
eP	P	PRIMARY DUCT(S)			
eS	S	SECONDARY DUCT(S) AND CABLES			
		PEDESTAL, 13.8 KV			
		PAD MOUNTED TRANSFORMER WITH CONCRETE ENCLOSURE			
	(6)	PAD MOUNTED SWITCH. 13.8KV WITH CONCRETE ENLOSURE "(6)" DENOTES 6 WAY			
	J WP	WEATHERPROOF JUNCTION BOX PEDESTAL MOUNTED, 300X300X150			
		BOLLARD LIGHT, 50W MH			
		LIGHT POLE 25FT ON 600MM HIGH CONCRETE PEDESTAL BASE WITH SINGLE ROADWAY STANDARD FIXTURE			
		LIGHT POLE 25FT ON 600MM HIGH CONCRETE PEDESTAL BASE WITH TWO LIGHT FIXTURE			
		LIGHT POLE 25FT ON 600MM HIGH CONCRETE PEDESTAL BASE WITH THREE LIGHT FIXTURE			

ABBREVIATIONS

ABBREV	DESCRIPTION	ABBREV	DESCRIPTION	ABBREV	DESCRIPTION	ABBREV	DESCRIPTION
A	AMPERES	FFL	FINISH FLOOR LINE	MTD	MOUNTED	TMGB	TELECOMMUNICATION MAIN GROUND BUSBAR
AIC	AMPERES INTERRUPTING CAPACITY	FLA	FULL LOAD AMPERE	N	NEUTRAL	VA	VOLT-AMPERES
ACCU	AIR COOLED CONDENSING UNIT	FT	FEET	NEC	NATIONAL ELECTRICAL CODE (NFPA 70)	W	WIRE; WIDTH; WATT
AWG	AMERICAN WIRE GAUGE	G	GOVERNMENT FURNISHED-CONTRACTOR-INSTALLED	NFS	NONFUSED DISCONNECT SWITCH	XFR	TRANSFER
BC	BARE CONDUIT	GFI	GROUND FAULT INTERRUPTER	NFPA	NATIONAL FIRE PROTECTION ASSOCIATION	XFMR	TRANSFORMER
C	CONDUIT	GFCI	GROUND	NL	NIGHTLIGHT		
CAB	CABINET	GND	GROUND	NTS	NOT TO SCALE		
CB	CIRCUIT BREAKER	GOV'T.	GOVERNMENT	P	POLES		
CL	CURFEW LIGHT	HH	HANDHOLE	PF	POWER FACTOR		
CKT	CIRCUIT	HP	HORSEPOWER	PH	PHASE		
COMP	COMPRESSOR	HPS	HIGH PRESSURE SODIUM	PRI	PRIMARY		
CU	COPPER	HZ	HERTZ	RAC	RIGID ALUMINUM CONDUIT		
COND	CONDENSER	IDS	INTRUSION DETECTION SYSTEM	RMS	ROOT MEAN SQUARE		
ENCL	ENCLOSED ; ENCLOSURE	KVA	KILO-VOLT-AMPERES	SC	SHORT CIRCUIT		
EQ	EQUAL; EQUIVALENT	KW	KILOWATTS	SEC	SECONDARY		
EVAP	EVAPORATOR	LA	LIGHTNING ARRESTER	SPDT	SINGLE-POLE, DOUBLE-THROW		
FA	FIRE ALARM	LT	LIGHT	SPEC	SPECIFICATION		
FACP	FIRE ALARM CONTROL PANEL	MOV	METAL OXIDE VARISTOR	STL	STEEL		
FAIP	FIRE ALARM INTERFACE PANEL	MIN	MINIMUM	SVC	SERVICE		

GENERAL NOTES:

1 COORDINATE WORK AND USE OF SPACES WITH OTHER TRADES PRIOR TO INSTALLATION. PREPARE SHOP DRAWINGS FOR ALL WORK.
2 ALL WORK SHALL BE PERFORMED BY OR UNDER THE SUPERVISION OF A MASTER ELECTRICIAN OR REGISTERED PROFESSIONAL ENGINEER LICENSED IN GUAM.
3 MAINTAIN A JOBSITE COPY OF DRAWINGS INCLUDING A RECORD OF ACTUAL AS-BUILT CONDITIONS AND DEVIATIONS. INCORPORATE THESE CONDITIONS INTO A FINAL ELECTRONIC AS-BUILT DRAWING FILE.

ELECTRICAL NOTES:

1 ALL WORK SHALL BE PERFORMED IN ACCORDANCE WITH THE NEC AND THE LOCAL CODES, FEDREAL GOV'T REGULATION & AAFB STANDARDS. CONSTRUCTION PROCEDURE SHALL CONFORM TO THE LATEST EDITION OF THE AMERICAN HANDBOOK. COMPLY WITH MANUFACTURERS RECOMMENDATIONS FOR INSTALLATION AND OPERATION OF EQUIPTMENT AND DEVICES.
2 USE MATERIALS WHICH ARE APPROVED OR LISTED BY THE UNDERWRITER'S LABORATORIES (U.L.) OR EQUIVALENT RECOGNIZED STANDARDS AND TESTING AGENCY.
3 CONDUCTORS: USE COPPER CONDUCTORS, AWG NO. 12 OR LARGER. THHN/THWN FOR GENERAL INTERIOR USE. CONDUCTORS AWG NO. 10 AND SMALLER SHALL BE SOLID. LARGER CONDUCTORS, AND CONDUCTORS FOR MOVING OR MOVEABLE EQUIPMENT SHALL BE STRANDED.
4 CONDUIT: EMT SHALL BE ALLOWED FOR USE IN CONCEALED INTERIOR SPACES. FOR EXPOSED CONDUIT SUBJECT TO IMPACT, USE RIGID ALUMINUM CONDUIT. USE PVC SCHEDULE 40 FOR CONDUIT EMBEDDED IN CONCRETE.
5 OVERCURRENT PROTECTION: USE CIRCUIT BREAKERS AND OTHER OVERCURRENT PROTECTIVE DEVICES WHICH ARE ADEQUATELY RATED FOR THE AVAILABLE SHORT CIRCUIT CURRENT LEVELS INDICATED.
6 PANELBOARDS: USE FULL SIZE BOLT-ON TYPE CIRCUIT BREAKERS. HALF-SIZE OR TWIN BREAKERS ARE NOT ALLOWED. PROVIDE SEPARATE GROUND AND NEUTRAL BUSSES IN EACH PANELBOARD. NEUTRAL BUSSES SHALL BE ISOLATED FROM CONTACT WITH THE ENCLOSURE. PANELBOARDS SHALL BE PROVIDED WITH KEY-LOCKABLE HINGED DOORS.
7 LIGHT FIXTURES: PROVIDE LIGHT FIXTURES USING ENERGY SAVINGS LAMPS AND BALLASTS WITH THE UL AND CBM LABELS..
8 GROUNDING: PROVIDE A GREEN INSULATED GROUNDING CONDUCTOR IN EACH RACEWAY SIZED IN ACCORDANCE WITH NEC ARTICLE 250.

FINAL RFP SUBMITTAL

GRAPHIC SCALE:

THE CONTRACTOR SHALL BE RESPONSIBLE FOR COORDINATING THE WORK AMONG THE VARIOUS TRADES AS NECESSARY TO AVOID CONFLICTS AND TO INSURE THE INSTALLATION OF ALL WORK WITHIN THE AVAILABLE SPACE.

SYM.	DESCRIPTION	DATE	APPR

N.C. MACARIO & ASSOCIATES, INC.
P.O. Box 784 Agana, Guam 96910
Tel. 646-0947/48 Fax: 646-0901
Email: ncma@guam.net

SEAL

SUBMITTED BY
N.C. MACARIO & ASSOCIATES, INC.
FIRM MEMBER
NCM DATE ------
APPROVED
ACTIVITY - SATISFACTORY TO DATE
APPROVED
FOR COMMANDER NAVFAC PACIFIC DATE

DES	DR
CHK	QC
CH ENG	

REVIEWED BY
PDE
INIT. BRANCH MANAGER
FIRE PROTECTION
BRANCH MANAGER
DESIGN DIRECTOR

NAVAL FACILITIES ENGINEERING COMMAND
NAVFAC MARIANAS
SUMAY, GUAM

TITLE/LOCATION:
FY12 MCAF PROJECT SAKW059101
PRTC - REDHORSE CANTONMENT OPERATIONS FACILITY,
ANDERSEN AIR FORCE BASE GUAM

SHEET CONTENT:
ELECTRICAL SYMBOLS, ABBREVIATION AND NOTES

CODE ID. NO. 80091 SIZE D
SCALE: AS SHOWN
CONST. CONTR. NO. 000000-00-0-0000
SPEC. NO. 00-00-0000
NAVFAC DRAWING NO.
SHEET 27 OF 31
E-1

DRAWFORM REVISION JUL 2009

NOTE:

1. PROVIDE NEW CONCRETE-ENCASED 2-6" DUCTS:1-6-INCH DESIGNATED SPARE WITH PULLWIRE; AND 1-6-INCH WITH 3-1/C #4/0 AWG XLP 15 KV UNGROUNDED, SHIELDED COPPER CABLES FROM RISER POLE NEAR SOUTHERN ACCESS GATE TO RISER POLE AT NORTHWESTERN ACCESS GATE TO REPLACE EXISTING OVERHEAD LINE, INCLUDING PRIMARY MANHOLES, PAD-MOUNTED SWITCHES, AND PAD-MOUNTED TRANSFORMERS AS SPECIFIED.

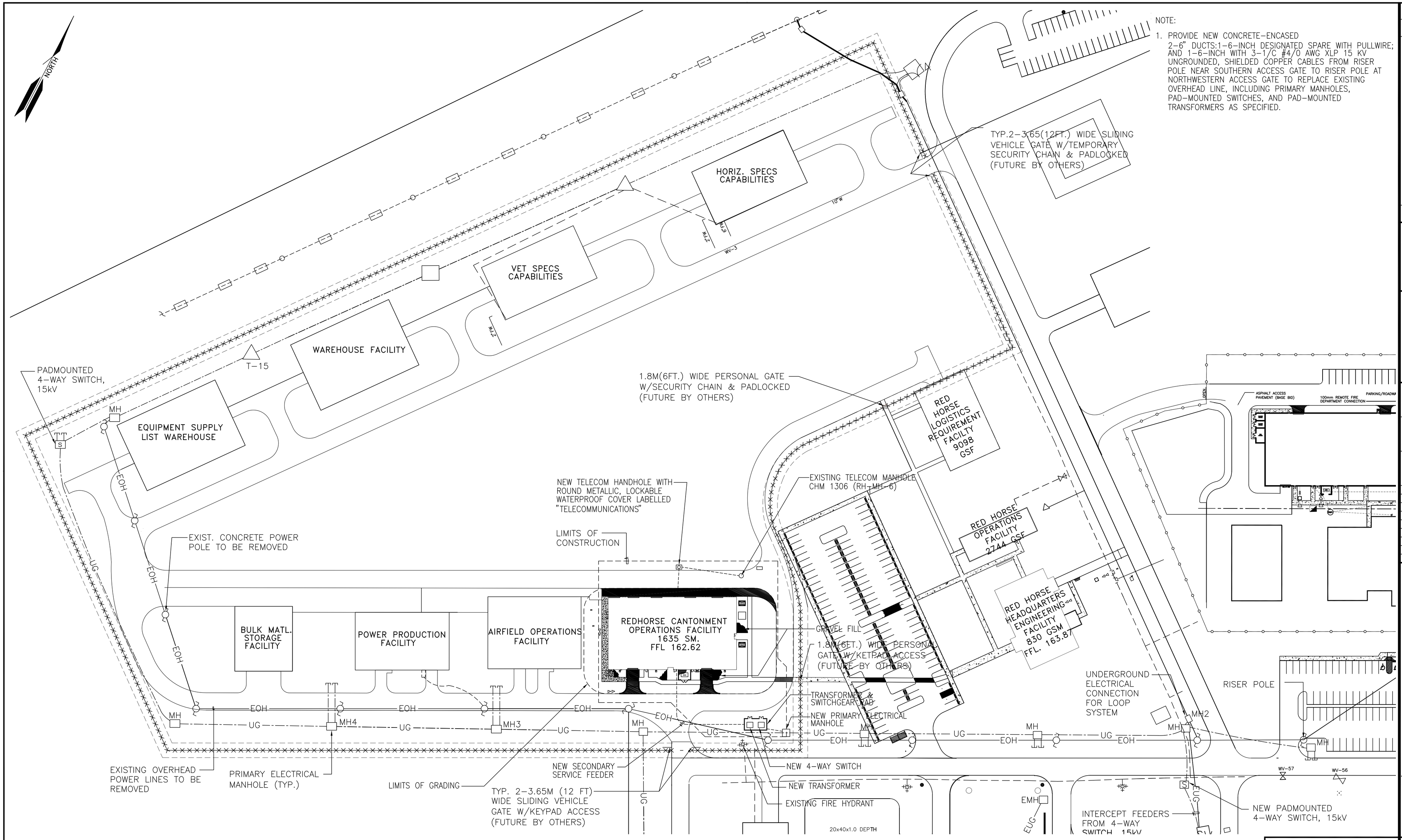

A E-2.1 E-2.1

ELECTRICAL SITE PLAN

SCALE: 1:750 M

GRAPHIC SCALE:

THE CONTRACTOR SHALL BE RESPONSIBLE FOR COORDINATING THE WORK AMONG THE VARIOUS TRADES AS NECESSARY TO AVOID CONFLICTS AND TO INSURE THE INSTALLATION OF ALL WORK WITHIN THE AVAILABLE SPACE.

FINAL RFP SUBMITTAL

SYM.	DESCRIPTION	DATE	APPR

N.C. MACARIO & ASSOCIATES, INC.
P.O. Box 784 Agana, Guam 96910
Tel. 646-0947/48 Fax: 646-0901
Email: ncma@guam.net

SEAL

SUBMITTED BY
N.C. MACARIO & ASSOCIATES, INC.

FIRM MEMBER
NCM DATE

APPROVED

ACTMTY - SATISFACTORY TO DATE

APPROVED

FOR COMMANDER NAVFAC PACIFIC DATE

DES | DR
CHK | QC
CH ENG
REVIEWED BY
PDE
INIT. BRANCH MANAGER
FIRE PROTECTION
BRANCH MANAGER
DESIGN DIRECTOR

NAVAL FACILITIES ENGINEERING COMMAND
NAVFAC MARIANAS
SUMAY, GUAM

TITLE/LOCATION:
FY12 MCAF PROJECT SAKW059101
PRTC - REDHORSE CANTONMENT OPERATIONS FACILITY,
ANDERSEN AIR FORCE BASE GUAM

SHEET CONTENT:
ELECTRICAL SITE UTILITY PLAN

CODE ID. NO. 80091 | SIZE D
SCALE: AS SHOWN
CONST. CONTR. NO. 000000-00-0-0000
SPEC. NO. 00-00-0000
NAVFAC DRAWING NO.

SHEET 28 OF

E-2.1

SITE ELECTRICAL NOTES:

① PRIMARY ELECTRICAL MANHOLE

② NEW 4–WAY PADMOUNTED SWITCH, 200 AMP. 13.8 kV WITH THE FOLLOWING SWITCH ASSIGNMENTS.

SWITCH NO. 1 – INCOMING MAIN FEEDER
SWITCH NO. 2 – OUTGOING MAIN FEEDER
SWITCH NO. 3 – FEEDER TO 300 KVA TRANSFORMEMR
SWITCH NO. 4 – SPARE FOR FUTURE FEEDER

③ PAD MOUNTED TRANSFORMER, 300 KVA, 13.8 KV – 480/277V, 3–PHASE, 4W

④ NEW UNDERGROUND SECONDARY SERVICE FEEDER: 103 MM (4–INCH), 4–#500 KCMIL.

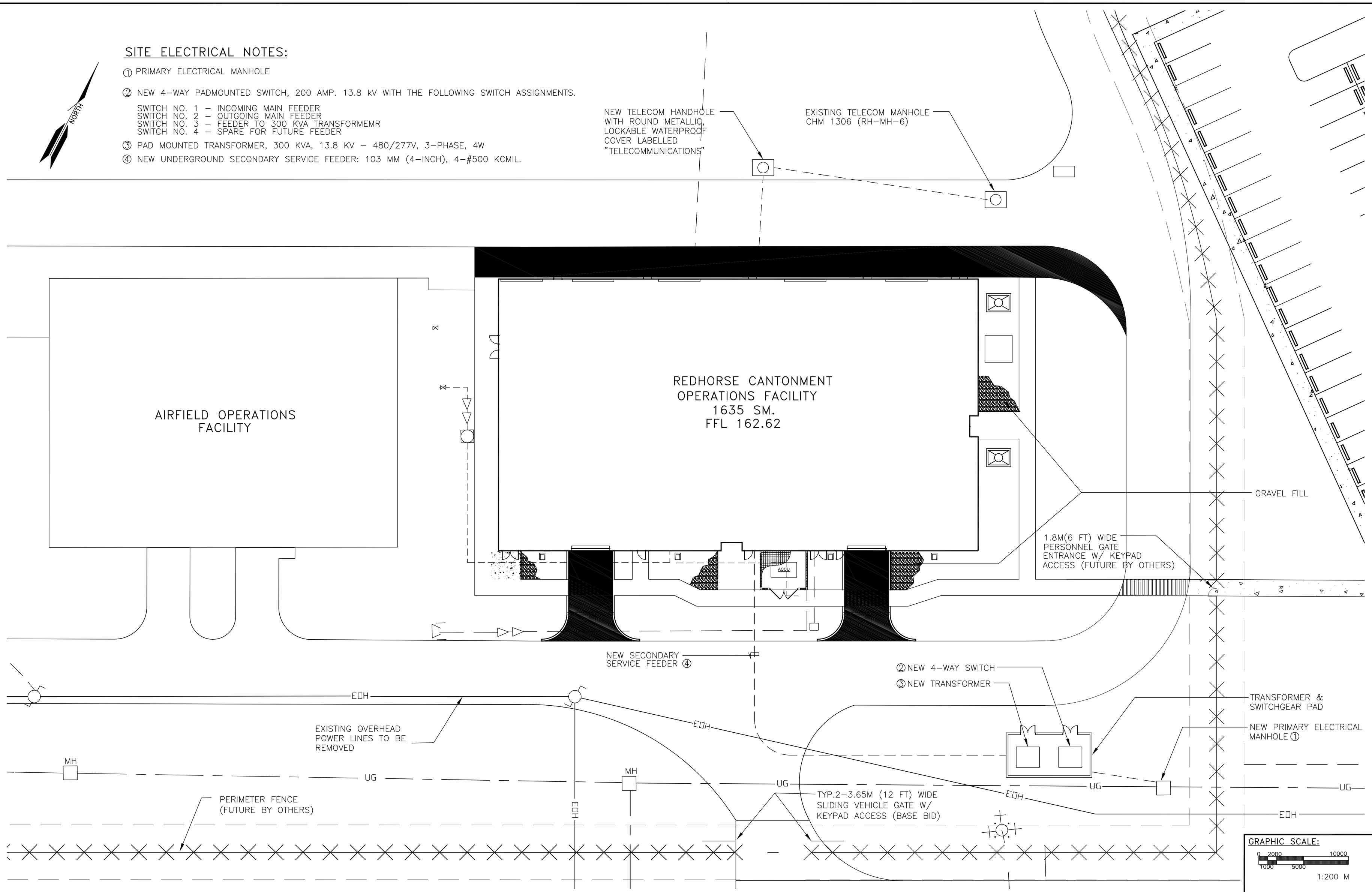

A E-2.2 E-2.2 ELECTRICAL SITE UTILITY PLAN
SCALE: 1:200 M

FINAL RFP SUBMITTAL

GRAPHIC SCALE:
0 2000 10000
1000 5000
1:200 M

THE CONTRACTOR SHALL BE RESPONSIBLE FOR COORDINATING THE WORK AMONG THE VARIOUS TRADES AS NECESSARY TO AVOID CONFLICTS AND TO INSURE THE INSTALLATION OF ALL WORK WITHIN THE AVAILABLE SPACE.

SYM.	DESCRIPTION	DATE	APPR

N.C. MACARIO & ASSOCIATES, INC.
P.O. Box 784 Agana, Guam 96910
Tel. 646–0947/48 Fax: 646–0901
Email: ncma@guam.net

SEAL

SUBMITTED BY
N.C. MACARIO & ASSOCIATES, INC.

FRM MEMBER
NCM DATE – – – – – –

APPROVED

ACTMTY – SATISFACTORY TO
DATE

APPROVED

FOR COMMANDER NAVFAC PACIFIC
DATE

DES | DR
CHK | QC
CH ENG
REVIEWED BY
PDE
INIT. BRANCH MANAGER
FIRE PROTECTION
BRANCH MANAGER
DESIGN DIRECTOR

NAVAL FACILITIES ENGINEERING COMMAND
NAVFAC MARIANAS
SUMAY, GUAM

TITLE/LOCATION: FY12 MCAF PROJECT SAKW059101
PRTC – REDHORSE CANTONMENT OPERATIONS FACILITY,
ANDERSEN AIR FORCE BASE GUAM

SHEET CONTENT: ELECTRICAL SITE UTILITY PLAN

CODE ID. NO. 80091 | SIZE D
SCALE: AS SHOWN
CONST. CONTR. NO. 000000–00–0–0000
SPEC. NO. 00–00–0000
NAVFAC DRAWING NO.
SHEET 29 OF 31
E–2.2

A
E-3 E-3

ELECTRICAL PLAN

SCALE: 1:100 M

FINAL RFP SUBMITTAL

GRAPHIC SCALE:

0 1 2 5

SCALE: 1:100 METERS

THE CONTRACTOR SHALL BE RESPONSIBLE FOR COORDINATING THE WORK AMONG THE VARIOUS TRADES AS NECESSARY TO AVOID CONFLICTS AND TO INSURE THE INSTALLATION OF ALL WORK WITHIN THE AVAILABLE SPACE.

SYM.	DESCRIPTION	DATE	APPR

N.C. MACARIO & ASSOCIATES, INC.
P.O. Box 784 Agana, Guam 96910
Tel. 646-0947/48 Fax: 646-0901
Email: ncma@guam.net

SEAL

SUBMITTED BY
N.C. MACARIO & ASSOCIATES, INC.

FIRM MEMBER
NCM DATE ------

APPROVED

ACTIVITY - SATISFACTORY TO DATE

APPROVED

FOR COMMANDER NAVFAC PACIFIC DATE

DES	DR
CHK	QC
CH ENG	
REVIEWED BY	
PDE	
INIT. BRANCH MANAGER	
FIRE PROTECTION	
BRANCH MANAGER	
DESIGN DIRECTOR	

NAVAL FACILITIES ENGINEERING COMMAND
NAVFAC MARIANAS
SUMAY, GUAM

TITLE/LOCATION:
FY12 MCAF PROJECT SAKW059101
PRTC REDHORSE CANTONMENT OPERATIONS FACILITY,
ANDERSEN AIR FORCE BASE GUAM

SHEET CONTENT:
ELECTRICAL PLAN

CODE ID. NO. 80091 SIZE D

SCALE: AS SHOWN

CONST. CONTR. NO.
000000-00-0-0000

SPEC. NO. 00-00-0000

NAVFAC DRAWING NO.

SHEET 30 OF 311

E-3

DRAWFORM REVISION JUL 2009

ELECTRICAL NOTES:

1. PROVIDE NEW PAD–MOUNTED PRIMARY SWITCH AND ELECTRIC MANHOLE (EMH) FOR INTERCEPTING EXISTING PRIMARY UNDERGROUND FEEDER, AND FOR PROVIDING CIRCUIT SWITCHES TO NEW PAD MOUNTED TRANSFORMER AND FUTURE AND OTHER LOADS.
2. PROVIDE NEW PRIMARY MANHOLE FOR INTERCEPTING/PULLING IN EXISTING PRIMARY UNDERGROUND FEEDER. PROVIDE IN–LINE SPLICES TO EXTEND AND LOOP FEEDER THROUGH NEW PRIMARY SWITCH.

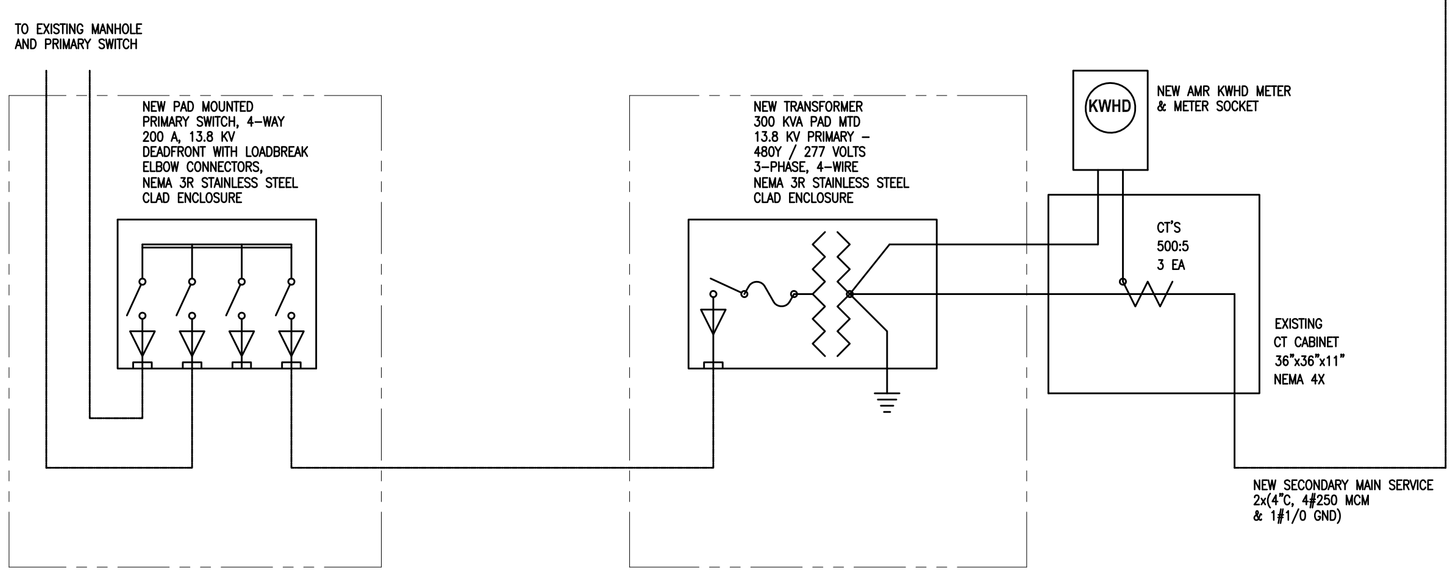

A
E–4 E–4

REDHORSE CANTONMENT FACILITY ELECTRICAL ONE–LINE DIAGRAM

SCALE: NOT TO SCALE

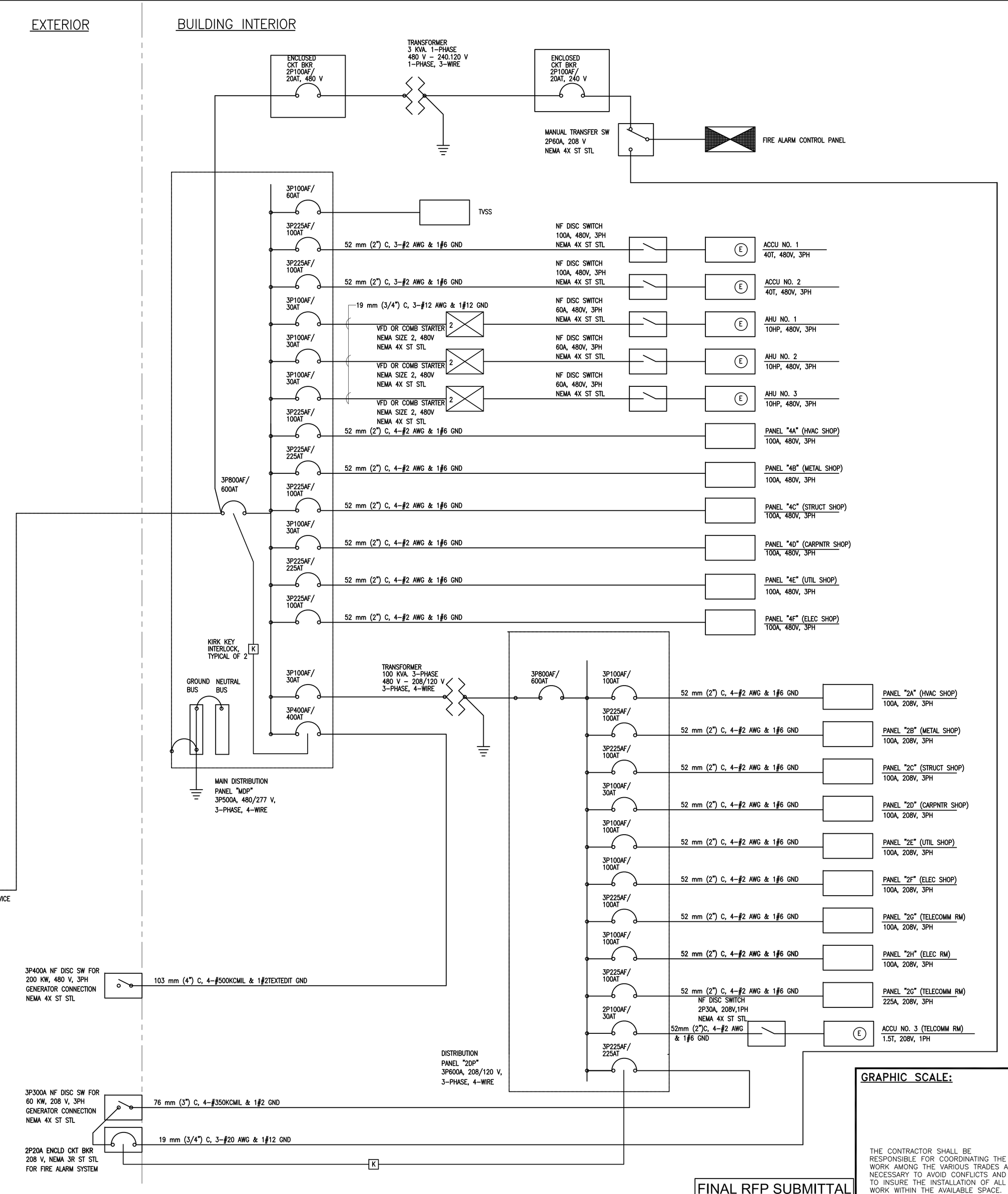

FINAL RFP SUBMITTAL

GRAPHIC SCALE:

THE CONTRACTOR SHALL BE RESPONSIBLE FOR COORDINATING THE WORK AMONG THE VARIOUS TRADES AS NECESSARY TO AVOID CONFLICTS AND TO INSURE THE INSTALLATION OF ALL WORK WITHIN THE AVAILABLE SPACE.

SYM.	DESCRIPTION	DATE	APPR

N.C. MACARIO & ASSOCIATES, INC.
P.O. Box 784 Agana, Guam 96910
Tel. 646–0947/48 Fax: 646–0901
Email: ncma@guam.net

SEAL

SUBMITTED BY
N.C. MACARIO & ASSOCIATES, INC.
FIRM MEMBER
NCM DATE ––––––
APPROVED
ACTIVITY – SATISFACTORY TO DATE
APPROVED
FOR COMMANDER NAVFAC PACIFIC DATE
DES DR
CHK QC
CH ENG
REVIEWED BY
PDE
INIT. BRANCH MANAGER
FIRE PROTECTION
BRANCH MANAGER
DESIGN DIRECTOR

NAVAL FACILITIES ENGINEERING COMMAND
NAVFAC MARIANAS
SUMAY, GUAM

TITLE/LOCATION:
FY12 MCAF PROJECT SAKW059101
PRTC – REDHORSE CANTONMENT OPERATIONS FACILITY,
ANDERSEN AIR FORCE BASE GUAM

SHEET CONTENT:
ELECTRICAL ONE–LINE DIAGRAM

CODE ID. NO. 80091 SIZE D
SCALE: AS SHOWN
CONST. CONTR. NO. 000000–00–0–0000
SPEC. NO. 00–00–0000
NAVFAC DRAWING NO.
SHEET 31 OF 311
E–4

DRAWFORM REVISION JUL 2009