RCI-2 MELT FURNACE
2,3,7,8-TCDD
SOURCE TEST

Prepared For

Madison-Kipp Corporation
P. O. Box 3037
Madison, WI 53704

Prepared By

James S. Rickun
Environmental Consulting
4933 Black Oak Drive
Madison, WI 53711-4373
(608) 274-2921

October 2007

INTRODUCTION

Madison-Kipp Corporation (MKC) operates an aluminum melting and die casting facility located at 204 Waubesa Street in Madison, Wisconsin. On September 25, 2007 MKC performed emissions testing of the RCI-2 aluminum melt furnace (with chlorine injection) stack S-17 in order to develop an emission factor for 2,3,7,8-TCDD (all isomers) as required by item I, XXX, 1, a, 2 of air pollution control permit 07-BAP-002. issued by the WDNR on March 30, 2007. The purpose of the testing was to develop an emission factor based on an altered operating scenario proposed by MKC. This operating scenario is as follows:

- 1-2 minutes of internal runaround introduction
- 3 minutes of wait time
- 6 minutes of chlorine injection (at a rate of 30 pounds per hour, corresponding to ½ pound per minute)
- 1 minute wait time

Then the sequence identified above would be repeated. Because MKC operates the melt furnace within a continuum of a maximized aluminum melt rate of 4 tons per hour on one end of the continuum, and a maximized chlorine use rate of 35 pounds per hour on the other end of the continuum, the parameters representing worst case of compliance testing is difficult to define. Therefore, it is believed the operating scenario identified above represents real-world worst-case conditions.

MKC retained Armstrong Environmental of Dallas, Texas to conduct 2,3,7,8-TCDD source testing on a stack that serves this process. James S. Rickun Environmental Consulting was retained to supervise the testing (procedure and application), to monitor the operation of the process during testing and to summarize the test results in a report.

The testing was performed on September 25, 2007. Testing was initiated at 0820 on with the following individuals present:

Armstrong Environmental	Mr. Tom Armstrong Mr. Rich Taylor
James S. Rickun Environmental Consulting	Mr. Jim Rickun
Madison-Kipp Corporation	Mr. James Lenz Mr. Dan Keyes Mr. Mark Meunier

James S. Rickun provided test supervision and coordination of production operations.

SUMMARY OF RESULTS

- Three one-hour duration tests were performed on September 25, 2007. During each test the 2,3,7,8-Tetrachloro-dibenzo para dioxin (2,3,7,8-TCDD, all isomers) at the exhaust stack were sampled. The three runs produced $2.03E^{-8}$, $2.56E^{-8}$, and $1.96E^{-8}$ pounds per hour, respectively, for an averaged hourly emission rate of $2.18E^{-8}$ pounds per hour. During this period the furnace was operated at an average of 1.9 tons per hour of aluminum internal runaround introduction, and an average 13.17 pounds per hour of chlorine introduction. The separation time was three minutes between ceasing runaround introduction and the initiation of chlorine introduction and one minute between ceasing chlorine introduction and initiating runaround introduction.

- Within each of the runs identified above the furnace was continually operated above its current operating permit limitation of at least 1340°F, pump amperage of at least 9 amps, and a furnace level of no more than 7 inches down from full

- The magnesium percent averaged about 0.22.

DISCUSSION OF RESULTS

Stack S-17 serving the RCI-2 melt furnace was tested for 2,3,7,8-TCDD emissions on September 25, 2007. The test results are summarized in Table 1. The detailed emission test data are presented in Appendix A. The testing was conducted in accordance with the following United States Environmental Protection Agency (USEPA) reference methods:

Velocity Traverse Location	USEPA Method 1
Stack Velocity and Flow Rate	USEPA Method 2
Gas Analysis	USEPA Method 3
TCDD/TCDF	USEPA Method 23

The results of the testing performed established the following average emission rate:

TCDD/TCDF = $1.66E^{-9}$ lbs./lb. CL2 introduced

TABLE 1

S-17/P-35 RCI-2 Melt Furnace
TCDD/TCDF
(September 25, 2007)

Run Number	1	2	3	Average
Time	0820-0924	1015-1117	1200-1303	
Flow (acfm)	21030.9	20413.8	20354.3	20599.7
Gas Temp (°F)	269.3	225.0	228.8	241.0
Moisture (%)	2.99	2.99	3.34	3.11
TCDD/TCDF (lbs/hr)	$2.03E^{-8}$	$2.56E^{-8}$	$1.96E^{-8}$	$2.18E^{-8}$
Isokinetic (%)	94.56	96.35	97.77	

Exhaust Emissions Sampling

Madison-Kipp Corporation, Madison, WI

RCI-2 (Furnace #2 Exhaust)

September 25, 2007

Armstrong Environmental, Inc.

Project W-2543-07

Report Prepared For:

James S. Rickun

Environmental Consulting

4933 Black Oak Drive

Madison, WI 53711-4373

Report Prepared October 25, 2007 By:

Armstrong Environmental, Inc.

1748 Hlavek Rd.

Decatur, Texas 76234

(214) 631-0021

TABLE OF CONTENTS

	Page
I. Introduction	1
II. Summary	2 - 3
III. Procedures	4 - 5
IV. Appendices	
A. Calculation Summaries	6 - 8
B. Field Data Sheets	9 - 12
C. Equipment Calibrations	13 - 20
D. Analytical Summaries	21 - 36

I. INTRODUCTION

A series of tests was performed on the exhaust associated with RCI Reverberatory Furnace at the Madison-Kipp Corporation facility in Madison, WI on September 25, 2007.

The purpose of this test series was to determine the exhaust emission rate of total 2,3,7,8-TCDD in terms of lbs/hr.

Testing followed procedures detailed in Title 40: Code of Federal Regulations (40:CFR).

Sampling was performed by Richard Taylor and Tom Armstrong of Armstrong Environmental, Inc. using an Apex Method 5 sampling train.

Three one hour test repetitions were performed, commencing at 8:20 AM and ending at 1:03 PM.

Submitted by:
Armstrong Environmental, Inc.

Tom Armstrong
President

II. SUMMARY

A series of tests was performed on the exhaust associated with RCI Reverberatory Furnace at the Madison-Kipp Corporation facility in Madison, WI on September 25, 2007.

Sampling was performed following procedures detailed in Title 40: Code of Federal Regulations.

Results of this test series are summarized in Table 1.

Results indicate the following emission rates:

Run #	1	2	3	Average
2,3,7,8-TCDD, lbs/hr	0.0000000203	0.0000000256	0.0000000196	0.0000000218

SUMMARY OF EMISSIONS TEST DATA

Table : 1
Plant : Madison Kipp, Madison, WI
Location : RCI-2
Operator : R. Taylor, T. Armstrong
Test Date : 25-Sep-07

Repetition :	1	2	3
STACK GAS			
Temperature, F	269.3	225.0	228.8
Velocity, fps	64.77	62.87	62.68
Volume Flow, acfm	21030.9	20413.8	20354.3
scfm	14350.3	14831.7	14655.2
scfh	861020	889904	879315
Moisture, %	2.99%	2.99%	3.34%
CO2, %	0.75	0.50	0.50
O2, %	19.75	19.75	19.75
SAMPLE			
Start Time, hrs:min	8:20 AM	10:15 AM	12:00 PM
Finish Time, hrs:min	9:24 AM	11:17 AM	1:03 PM
Sample Volume, scf	32.803	34.542	34.634
Isokinetic Ratio, %	94.5632	96.34556	97.76577
Total 2,3,7,8-TCDD			
Sample Weight, ng	0.35	0.45	0.35
Concentration, ug/M3	0.000377	0.00046	0.000357
Emissions, lbs/hr	2.03E-08	2.56E-08	1.96E-08

III. PROCEDURES

The procedure for emissions sampling followed USEPA test methods as detailed in Title 40: Code of Federal Regulations. The following methods were used:

Method	Title
1	Sample and Velocity Traverses for Stationary Sources
2	Determination of Stack Gas Velocity and Volumetric Flow Rate (Type S Pitot Tube)
3	Gas Analysis for CO2, O2, Excess Air and Dry Molecular Weight
23	Determination of Polychlorinated Dibenzo-p-Dioxins and Polychlorinated Dibenzofurans from Stationary Sources

O2 and CO2 were determined using FyRite Analyzers.

Dioxin sampling was performed for 5 minutes at each of 12 points, 6 points per traverse, making a total run duration of 60 minutes. A schematic of the sampling location is shown in Figure 1. The sampling train was configured as follows:

Stainless Steel Sampling Nozzle
Heated Glass Lined Probe
Heated glass fiber filter
Water Cooled Glass Condenser
Water Cooled XAD-2 Trap
Impinger #1 - Empty
Impinger #2 - 100 mls H2O
Impinger #3 - 100 mls H2O
Impinger #4 - Empty
Impinger #5 - 200 grams silica Gel

Probe, filter holder and pretrap glassware were rinsed three times with each of acetone and methylene chloride and stored in a glass sample bottle, then rinsed three times with toluene and stored in a separate sample bottle. Filter was recovered and placed in a glass petrie dish. XAD-2 Trap was capped, wrapped in tin foil, and stored on ice. Samples were hand delivered to Pace Analytical Services in Minneapolis, MN where analysis was performed.

Figure 1 - RCI-2 Exhaust

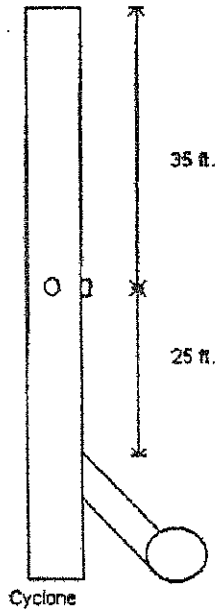

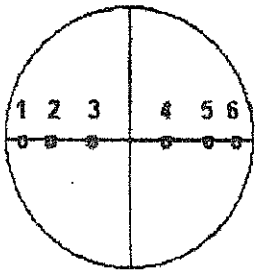

Stack Diameter - 31.5 inches
Point #1 - 1.4 inches
Point #2 - 4.6 inches
Point #3 - 9.3 inches
Point #4 - 22.2 inches
Point #5 - 26.9 inches
Point #6 - 30.1 inches

Appendix A

EMISSION TEST SUMMARY

PLANT : Madison Kipp, Madison, WI
DATE : 25-Sep-07
PLACE : RCI-2
RUN# : 1

TEST DURATION (MINUTES) :	60	LIQUID COLLECTED (mls) :	21.5
NOZZLE DIAMETER (INCH.) :	0.2	PARTICULATE WEIGHT (Front half mg) :	0
METER COEFFICIENT (Y) :	0.977	PARTICULATE WEIGHT (Back half mg) :	0
PITOT COEFFICIENT (Cp) :	0.84	STATIC PRESSURE (in. H2O) :	-0.445
GAS METER VOL.(Cu.Ft.) :	35.199	PERCENT CO2 :	0.75
BAROMETRIC PRESSURE :	29.1	PERCENT O2 :	19.75
		PERCENT CO :	0

FOR CIRCULAR STACK		FOR RECTANGULAR STACK	
STACK DIAMETER (inch):	31.5	STACK LENGTH(inchs) :	
STACK AREA (Sq.Ft.) :	5.411884	STACK WIDTH(inchs) :	
NOZZLE AREA (feet):	0.000218	STACK AREA (Sq.Ft.) :	0

ENTER THE STACK AREA SHOWN ABOVE: 5.411884

FLOWS

SAMPLED VOLUME (STD. CU.FT.):	32.8028
VOLUME OF WATER VAPOR (STD. CU.FT.):	1.0120
FRACTIONAL MOISTURE CONTENT (%):	0.0299
DRY BASE:	79.5000
MOLECULAR WT. OF STACK GAS (DRY BASE):	28.9100
MOLECULAR WT. OF STACK GAS (WET BASE):	28.5835
STACK PRESSURE (inch Hg):	29.0673
STACK GAS VELOCITY (ft/sec.):	64.7676
ACTUAL STACK GAS FLOW RATE (ACFM):	21030.9014
STANDARD STACK GAS FLOW RATE (SCFH):	861020.405
ISOKINETIC RATIO (%):	94.5632

POINTS	STACK T. deg F	DELTA P	SQUAR D.F	DELTA H	METER T. INLET	METER T. OUTLET	
1	291	1.05	1.024695	0.94	76	76	
2	294	1.10	1.048809	0.98	80	77	
3	295	1.10	1.048809	0.99	80	77	
4	296	0.98	0.989949	0.88	80	77	
5	297	0.76	0.87178	0.68	81	78	
6	288	0.68	0.824621	0.60	81	78	
7	249	0.97	0.984886	0.87	80	78	
8	247	1.00	1	0.89	82	78	
9	245	1.00	1	0.89	82	79	
10	245	0.98	0.989949	0.87	82	79	
11	243	0.88	0.938083	0.82	82	79	
12	241	0.69	0.830662	0.64	82	79	
	269.25		0.9627	0.8375	80.6667	77.9167	79.2917

EMISSION TEST SUMMARY

PLANT : Madison Kipp, Madison, WI
DATE : 25-Sep-07
PLACE : RCI-2
RUN# : 2

TEST DURATION (MINUTES) :	60	LIQUID COLLECTED (mls) :	22.6
NOZZLE DIAMETER (INCH.) :	0.2	PARTICULATE WEIGHT (Front half mg) :	0
METER COEFFICIENT (Y) :	0.977	PARTICULATE WEIGHT (Back half mg) :	0
PITOT COEFFICIENT (Cp) :	0.84	STATIC PRESSURE (in. H2O) :	-0.395
GAS METER VOL.(Cu.Ft.) :	37.16	PERCENT CO2 :	0.5
BAROMETRIC PRESSURE :	29.1	PERCENT O2 :	19.75
		PERCENT CO :	0

FOR CIRCULAR STACK		FOR RECTANGULAR STACK	
STACK DIAMETER (inch):	31.5	STACK LENGTH(inches) :	
STACK AREA (Sq.Ft.) :	5.411884	STACK WIDTH(inches) :	
NOZZLE AREA (feet):	0.000218	STACK AREA (Sq.Ft.) :	0

ENTER THE STACK AREA SHOWN ABOVE: 5.411884

FLOWS

SAMPLED VOLUME (STD. CU.FT.):	34.5422
VOLUME OF WATER VAPOR (STD. CU.FT.):	1.0638
FRACTIONAL MOISTURE CONTENT (%):	0.0299
DRY BASE:	79.7500
MOLECULAR WT. OF STACK GAS (DRY BASE):	28.8700
MOLECULAR WT. OF STACK GAS (WET BASE):	28.5452
STACK PRESSURE (inch Hg):	29.0710
STACK GAS VELOCITY (ft/sec.):	62.8672
ACTUAL STACK GAS FLOW RATE (ACFM):	20413.8083
STANDARD STACK GAS FLOW RATE (SCFH):	889904.476
ISOKINETIC RATIO (%):	96.3456

POINTS	STACK T. deg F	DELTA P	SQUAR D.F	DELTA H	METER T. INLET	METER T. OUTLET	
1	186	1.10	1.048809	1.05	79	77	
2	186	1.10	1.048809	1.05	82	77	
3	183	1.05	1.024695	1.10	82	78	
4	183	0.95	0.974679	1.00	82	78	
5	184	0.84	0.916515	0.90	82	79	
6	197	0.67	0.818535	0.72	83	79	
7	245	0.82	0.905539	0.83	82	79	
8	270	0.92	0.959166	0.89	84	80	
9	285	0.97	0.984886	0.92	84	80	
10	220	0.98	0.989949	0.99	84	80	
11	286	0.95	0.974679	0.90	84	80	
12	275	0.84	0.916515	0.80	84	80	
	225		0.9636	0.9292	82.6667	78.9167	80.7917

EMISSION TEST SUMMARY

PLANT : Madison Kipp, Madison, WI
DATE : 25-Sep-07
PLACE : RCI-2
RUN# : 3

TEST DURATION (MINUTES) :	60	LIQUID COLLECTED (mls) :	25.4
NOZZLE DIAMETER (INCH.) :	0.2	PARTICULATE WEIGHT (Front half mg) :	0
METER COEFFICIENT (Y) :	0.977	PARTICULATE WEIGHT (Back half mg) :	0
PITOT COEFFICIENT (Cp) :	0.84	STATIC PRESSURE (in. H2O) :	-0.39
GAS METER VOL.(Cu.Ft.) :	37.221	PERCENT CO2 :	0.5
BAROMETRIC PRESSURE :	29.1	PERCENT O2 :	19.75
		PERCENT CO :	0

FOR CIRCULAR STACK		FOR RECTANGULAR STACK	
STACK DIAMETER (inch):	31.5	STACK LENGTH(inchs) :	
STACK AREA (Sq.Ft.) :	5.411884	STACK WIDTH(inchs) :	
NOZZLE AREA (feet):	0.000218	STACK AREA (Sq.Ft.) :	0

ENTER THE STACK AREA SHOWN ABOVE: 5.411884

FLOWS

SAMPLED VOLUME (STD. CU.FT.):	34.6343
VOLUME OF WATER VAPOR (STD. CU.FT.):	1.1956
FRACTIONAL MOISTURE CONTENT (%):	0.0334
DRY BASE:	79.7500
MOLECULAR WT. OF STACK GAS (DRY BASE):	28.8700
MOLECULAR WT. OF STACK GAS (WET BASE):	28.5073
STACK PRESSURE (inch Hg):	29.0713
STACK GAS VELOCITY (ft/sec.):	62.6840
ACTUAL STACK GAS FLOW RATE (ACFM):	20354.3174
STANDARD STACK GAS FLOW RATE (SCFH):	879314.819
ISOKINETIC RATIO (%):	97.7658

POINTS	STACK T. deg F	DELTA P	SQUAR D.F	DELTA H	METER T. INLET	METER T. OUTLET	
1	210	1.10	1.048809	1.15	79	78	
2	186	1.10	1.048809	1.15	82	79	
3	186	1.00	1	1.05	82	79	
4	184	0.95	0.974679	1.00	81	79	
5	181	0.85	0.921954	0.89	81	79	
6	177	0.64	0.8	0.68	81	79	
7	234	0.93	0.964365	0.91	80	80	
8	262	1.00	1	0.98	82	80	
9	272	1.00	1	0.98	82	80	
10	280	0.97	0.984886	0.95	81	80	
11	286	0.85	0.921954	0.83	81	80	
12	287	0.68	0.824621	0.67	81	80	
	228.75		0.9575	0.9367	81.0833	79.4167	80.2500

Appendix B

FIELD DATA

PLANT: Madison Kipp
DATE: 9/25/07
REPETITION:
LOCATION (SOURCE #): Furnace # RCI-2
OPERATOR: TA, RT
SAMPLE TRAIN #:
METER BOX #: 11
BAROMETRIC PRESSURE: 29.10
AMBIENT TEMPERATURE: 75
ASSUMED MOISTURE: 5
PROBE LENGTH: 35
NOZZLE DIAMETER: .200, .201, .199 (.0002182)
STACK DIAMETER: 31.5
METER H: 1.403
C FACTOR: .84
METER CO-EFFICIENT: 0.977
FILTER TARE:

IMPINGERS

	Initial	Final
#1	0	2
#2	100	105
#3	100	102
#4	0	2
#5	200	210.5
#6		21.5

CO2	O2
0.5	19.5
1.0	20.0

PRE-TEST LEAK CHECK
Meter: 0.015 cu.ft. @ 15 in. HG
Pitots: ✓ @ 7.8 in. H2O

Condenser outlet F

POST-TEST LEAK CHECK
Meter: 0.005 cu.ft. @ 19.5 in. HG
Pitots: ✓ @ 5.7 in. H2O

Pt #	Time	Static Press	Ts F	Delta P	Nozl Angle	Delta H	Vm Cu. Ft.	Tm Inlet	Tm outlet	Oven Temp	Imp Temp	Vac In.HG
A1	8:20	-.44	291	1.05	68	1.94	552.888	76	76	241	65	12.0
2	:25		294	1.1	64	.98	555.9	80	77	251	66	12.0
3	:30		295	1.1	62	.99	559.1	80	77	242	66	14.0
4	:35		296	.98	61	.88	562.3	80	77	253	66	13.0
5	:40		297	.76	61	.68	565.3	81	78	255	65	11.5
6	:45		288	.68	61	.60	567.9	81	78	256	65	9.0
	8:50						570.595					
B1	8:54	-.45	249	.97	64	.87	570.595	80	78	242	66	12.5
2	:59		247	1.0	63	.89	573.4	82	78	241	68	13.5
3	9:04		245	1.0	62	.89	576.5	82	79	244	68	13.5
4	9:09		245	.98	62	.87	579.5	82	79	247	67	13.5
5	:14		243	.88	62	.82	582.5	82	79	249	66	13.0
6	:19		241	.69	63	.64	585.4	82	79	244	66	10.0
	9:24						588.007					
							35.199					
Ave.												

FIELD DATA

PLANT: Madison KIP
DATE: 9/25/07
REPETITION: 2
LOCATION (SOURCE #): RC1-2
OPERATOR: JA, RT
SAMPLE TRAIN #:
METER BOX #: 11
BAROMETRIC PRESSURE: 29.1
AMBIENT TEMPERATURE: 75
ASSUMED MOISTURE: 2.5
PROBE LENGTH: 35
NOZZLE DIAMETER: .200
STACK DIAMETER: 31.5
METER H: 1.903
C FACTOR: .84
METER CO-EFFICIENT: 0.977
FILTER TARE:

IMPINGERS

	Initial	Final
#1	0	1
#2	100	110
#3	100	100
#4	0	2
#5	200	209.6
#6		22.6

CO2	O2
0.5	20.0
0.5	19.5

PRE-TEST LEAK CHECK
Meter: 0.005 cu.ft. @ 15 in. HG
Pitots: ✓ @ 5 in. H2O

Trap Inlet

POST-TEST LEAK CHECK
Meter: 0.005 cu.ft. @ 14 in. HG
Pitots: ✓ @ 6.5 in. H2O

Pt #	Time	Static Press	Ts F	Delta P	Null Angle	Delta H	Vm Cu.ft.	Tm Inlet	Tm Outlet	Oven Temp	Imp. Temp	Vac in HG
A1	10:15	-.41	186	1.1	67	1.05	588.39	79	77	239	68	10.0
2	:20		186	1.1	58	1.05	591.6	82	77	249	68	11.0
3	:25		183	1.05	58	1.1	594.9	82	78	241	67	13.0
4	:30		183	.95	57	1.0	598.8	82	78	244	67	12.0
5	:35		184	.84	57	.90	601.5	82	79	237	66	11.0
6	:40		197	.67	60	.72	604.6	83	79	239	66	9.0
	10:45						607.311					
B1	10:47	-.38	245	.82	61	.83	607.311	82	79	234	65	10.0
2	:52		270	.92	62	.89	610.2	84	80	237	66	12.0
3	:57		285	.97	62	.92	613.3	84	80	244	66	12.0
4	11:02		220	.98	61	.99	616.3	84	80	250	66	12.5
5	:07		286	.95	61	.90	619.5	84	80	249	66	12.0
6	:12		275	.84	62	.80	622.6	84	80	242	66	11.0
	11:17						625.469					
							37.160					
Ave.												10

FIELD DATA

PLANT: Kipp
DATE: 9/25/07
REPETITION: 3
LOCATION (SOURCE #): RC1-2
OPERATOR: VA
SAMPLE TRAIN #:
METER BOX #: 61
BAROMETRIC PRESSURE: 29.1
AMBIENT TEMPERATURE: 76
ASSUMED MOISTURE: 2.5
PROBE LENGTH: 35
NOZZLE DIAMETER: .200
STACK DIAMETER: 31.5
METER H: 1.403
C FACTOR: .84
METER CO-EFFICIENT: 0.977
FILTER TARE:

IMPINGERS

	Initial	Final
#1	0	1
#2	100	115
#3	100	100
#4	0	0
#5	200	209.4
#6		
		25.4

CO2	O2
0.5	20
0.5	19.5

PRE-TEST LEAK CHECK
Meter: 0.015 cu.ft. @ 20 in. HG
Pitots: ✓ @ 6.2 in. H2O

Temp inlet

POST-TEST LEAK CHECK
Meter: 0.005 cu.ft. @ 13.5 in. HG
Pitots: ✓ @ 5.3 in. H2O

PL#	Time	Static Press	Ts F	Delta P	Null Angle	Delta H	Vm Cu. Ft	Tm inlet	Tm outlet	Oven Temp	Imp Temp	Vac in HG
A1	12:00	-.4	210	1.1	68	1.15	626.102	79	78	243	59	13.5
2	:05		186	1.1	55	1.15	629.6	82	79	244	59	13.5
3	:10		186	1.0	57	1.05	633.0	82	79	245	63	13.0
4	:15		184	.95	55	1.0	636.3	81	79	242	63	12.5
5	:20		181	.85	56	.89	639.5	81	79	236	64	11.0
6	:25		177	.64	57	.68	642.6	81	79	256	63	10.0
	12:30						645.206					
B1	12:33	-.38	234	.93	65	.91	645.206	80	80	242	68	11.5
2	:38		262	1.0	62	.98	648.3	82	80	241	64	12.5
3	:43		272	1.0	62	.98	651.5	82	80	236	65	12.5
4	:48		280	.97	62	.95	654.6	81	80	259	65	12.0
5	:53		286	.85	60	.83	657.8	81	80	244	64	11.0
6	:58		287	.68	61	.67	660.7	81	80	246	64	10.0
	1:03						663.323					
							37.221					
Ave.												11

FLOW DATA

POINT #	TIME	STATIC PRESS.	STACK TEMP	DELTA P	NULL ANGLE
A1	7:45	-.42	212	1.0	89
2			231	1.1	90
3			240	1.1	90
4			235	1.0	90
5			233	.82	90
6			209	.62	90
B 1			250	1.0	90
2			249	1.0	90
3			245	1.0	90
4			246	.95	90
5			243	.90	90
6			232	.65	89
	8:05				
AVE.					

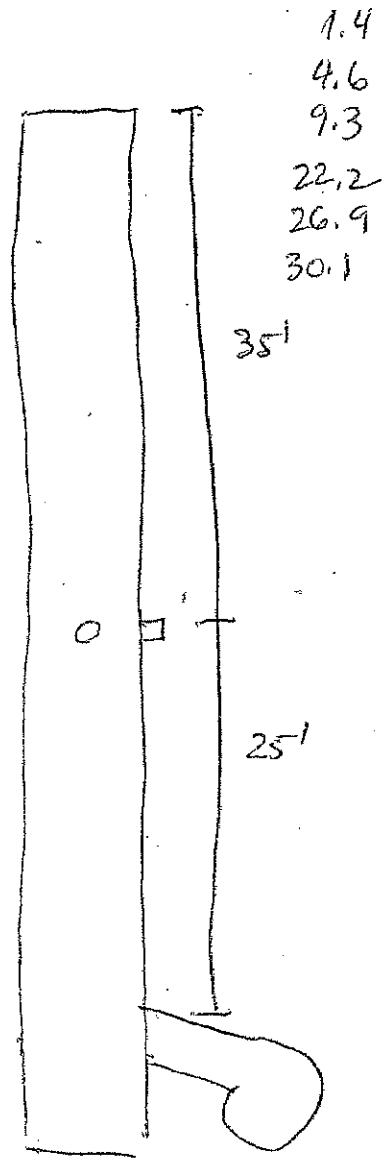

PLANT: Madison-Kipp
DATE: 9/25/07
RUN #: Cyclonic Flow Check

LOCATION (SOURCE #): RCI-1
OPERATOR: TA, RI
AMBIENT TEMPERATURE: 75
BAROMETRIC PRESSURE: 29.1
ASSUMED MOISTURE:
STACK DIAMETER: 31.5
C FACTOR: .84
COMMENTS:

CO2 O2

Appendix C

Armstrong Environmental Inc.
EPA Method 5
522 Series Meter Box Calibration
Pre-Test Orifice Method
English Meter Box Units, English K' Factor

CONVERSION FACTORS

1 mm Hg =	0.13330	kPa
1 cm =	0.39370	inch
1 mm =	0.03937	inch
1 cu ft =	28.32	liters

ter Box # 11
rial #: 40312

Date: ----------> 09/05/07
Barometric Pressure: ----------> 29.15 (in. Hg)
Theoretical Critical Vacuum:----> 13.75 (in. Hg)

!!!!!
PORTAN For valid test results, the Actual Vacuum should be 1 to 2 in. Hg greater than the Theoretical Critical Vacuum shown above.
PORTAN The Critical Orifice Coefficient, K', must be entered in English units, (ft)^3*(deg R)^0.5/((in.Hg)*(min)).
!!!!!

---------- DRY GAS METER READINGS ----------									-CRITICAL ORIFICE READINGS-						-- Average Temperatures --		
dH H2O)	Time (min)	Volume Initial (cu ft)	Volume Final (cu ft)	Volume Total (cu ft)	Initial Temps. Inlet (deg F)	Initial Temps. Outlet (deg F)	Final Temps. Inlet (deg F)	Final Temps. Outlet (deg F)	Orifice Serial# (number)	K' Orifice Coefficient (see above)	Actual Vacuum (in Hg)	-- Ambient Temperature -- Initial (deg F)	Final (deg F)	Average (deg F)	DGM Outlet (deg R)	DGM Overall (deg R)	Ambient Temp (deg R)
0.23	5.00	579.976	581.607	1.631	77.0	77.0	78.0	78.0	40	0.242	21.0	77.0	77.0	77.0	537.5	537.5	537.0
0.49	5.00	581.607	583.931	2.324	78.0	78.0	79.0	78.0	48	0.344	19.0	77.0	77.0	77.0	538.0	538.3	537.0
0.91	5.00	583.931	587.060	3.129	79.0	78.0	79.0	79.0	55	0.464	17.0	77.0	77.0	77.0	538.5	538.8	537.0
1.50	5.00	587.060	591.080	4.020	79.0	79.0	80.0	79.0	63	0.593	15.0	77.0	77.0	77.0	539.0	539.3	537.0
2.80	5.00	591.080	596.540	5.460	80.0	79.0	82.0	80.0	73	0.824	11.5	77.0	77.0	77.0	539.5	540.3	537.0

********** RESULTS **********

DRY GAS METER ---		-------- ORIFICE --------			-- DRY GAS METER --		-------- ORIFICE --------	
OLUME VOLUME ORRECT CORRECTED Vm(std) Vm(std) (cu ft) (liters)		VOLUME CORRECT Vcr(std) (cu ft)	VOLUME CORRECT Vcr(std) (liters)	VOLUME NOMINAL Vcr (cu ft)	CALIBRATION FACTOR Y Value (number)	Variation (number)	CALIBRATION FACTOR dH@ Value (in H2O)	Variation (in H2O)
1.561	0.1	1.524	0.1	1.592	0.976	-0.001	1.333	-0.0707
2.223	0.1	2.166	0.1	2.261	0.974	-0.003	1.405	0.001
2.993	0.1	2.918	0.1	3.047	0.975	-0.002	1.436	0.032
3.848	0.2	3.732	0.1	3.898	0.970	-0.007	1.445	0.042
5.233	0.2	5.181	0.2	5.411	0.990	0.013	1.398	-0.005

Average Y -------> 0.977 1.403 <-------- Average dH@

te: For Calibration Factor Y, the ratio of the reading of the calibration meter to the dry gas meter, acceptable tolerance of individual values from the average is +-0.02.

For Orifice Calibration Factor dH@, the orifice differential pressure in inches of H20 that equates to 0.75 cfm of air at 68 F and 29.92 inches of Hg, acceptable tolerance of individual values from the average is +-0.2.

SIGNED: _____ Date: 9/5/07

3

Temperature Meter Calibrations

Meter Box #: 11
Date: 09/05/07
Calibrated By: TA

Degrees F	Emtech 42312 Calibrator	Probe	Stack	Oven	Exit	Auxillary
Point 1	32	32	32	34	32	32
Point 2	212	212	212	213	212	212
Point 3	752	753	753	753	753	753

Degrees R	Emtech 42312 Calibrator	Probe	Stack	Oven	Exit	Auxillary
Point 1	492	492	492	494	492	492
Point 2	672	672	672	673	672	672
Point 3	1212	1213	1213	1213	1213	1213

Percent Difference

	Probe	Stack	Oven	Exit	Auxillary
Point 1	0	0	-0.4065	0	0
Point 2	0	0	-0.14881	0	0
Point 3	0.08244	0.08244	0.08244	0.08244	-0.08251

Armstrong Environmental Inc.
EPA Method 5
APEX INSTRUMENTS
511 Series Meter Box Calibration
Post-Test Orifice Method
English Meter Box Units, English K' Factor

CONVERSION FACTORS

1 mm Hg :	0.13330	kPa	
1 cm =	0.39370	inch	
1 mm =	0.03937	inch	
1 cu ft =	28.32	liters	

er Box / 11
al #: 40312

Date: ----------> 10/04/07
Barometric Pressure: ----------> 29.22 (in. Hg)
Theoretical Critical Vacuum:---> 13.78 (in. Hg)

!!!
ORTAN For valid test results, the Actual Vacuum should be 1 to 2 in. Hg greater than the Theoretical Critical Vacuum shown above.
ORTAN The Critical Orifice Coefficient, K', must be entered in English units, (ft)^3*(deg R)^0.5/((in.Hg)*(min)).
!!!

---------- DRY GAS METER READINGS ----------

-CRITICAL ORIFICE READINGS-

Theoretical Critical Vacuum:---> 13.78 (in. Hg)

dH (H2O)	Time (min)	Volume Initial (cu ft)	Volume Final (cu ft)	Volume Total (cu ft)	Initial Temps. Inlet (deg F)	Initial Temps. Outlet (deg F)	Final Temps. Inlet (deg F)	Final Temps. Outlet (deg F)	Orifice Serial# (number)	K' Orifice Coefficient (see above)	Actual Vacuum (in Hg)	Ambient Temperature Initial (deg F)	Ambient Temperature Final (deg F)	Ambient Temperature Average (deg F)	DGM Outlet (deg R)	DGM Overall (deg R)	Ambient Temp (deg R)
0.95	5.00	151.852	155.010	3.158	82.0	82.0	83.0	83.0	55	0.464	17.0	82.0	82.0	82.0	542.5	542.5	542.0
0.95	5.00	155.010	158.160	3.150	83.0	83.0	84.0	83.0	55	0.464	17.0	82.0	82.0	82.0	543.0	543.3	542.0
0.95	5.00	158.160	161.318	3.158	84.0	83.0	85.0	84.0	55	0.464	17.0	82.0	82.0	82.0	543.5	544.0	542.0

********** RESULTS **********

RY GAS METER --- UME VOLUME IRECT CORRECTED m(std) Vm(std) (cu ft) (liters)	-------- ORIFICE -------- VOLUME CORRECT Vcr(std) (cu ft)	VOLUME CORRECT Vcr(std) (liters)	VOLUME NOMINAL Vcr (cu ft)	-- DRY GAS METER -- CALIBRATION FACTOR Y Value (number)	Variation (number)	-------- ORIFICE -------- CALIBRATION FACTOR dH@ Value (in H2O)	Variation (in H2O)
3.008	0.1	2.911	0.1	3.061	0.968	-0.002	1.498	0.0014
2.996	0.1	2.911	0.1	3.061	0.972	0.002	1.497	-0.000
2.999	0.1	2.911	0.1	3.061	0.971	0.001	1.495	-0.001

Average Y -------> 0.970 **1.497** **<------- Average dH@**

: For Calibration Factor Y, the ratio of the reading of the calibration meter to the dry gas meter, acceptable tolerance of individual values from the average is +-0.02.

For Orifice Calibration Factor dH@, the orifice differential pressure in inches of H20 that equates to 0.75 cfm of air at 68 F and 29.92 inches of Hg, acceptable tolerance of individual values from the average is +-0.2.

SIGNED: _____ Date: 10/4/07

Temperature Meter Calibrations

Meter Box #: 11
Date: 10/04/07
Calibrated By: TA

Degrees F	Emtech Thermo Checker	Probe	Stack	Oven	Exit	Auxillary
Point 1	32	33	33	33	33	33
Point 2	212	213	213	213	213	213
Point 3	752	753	753	753	753	753

Degrees R	Emtech Thermo Checker	Probe	Stack	Oven	Exit	Auxillary
Point 1	492	493	493	493	493	493
Point 2	672	673	673	673	673	673
Point 3	1212	1213	1213	1213	1213	1213

Percent Difference

	Probe	Stack	Oven	Exit	Auxillary
Point 1	-0.20325	-0.20325	-0.20325	-0.20325	-0.20325
Point 2	-0.14881	-0.14881	-0.14881	-0.14881	-0.14881
Point 3	-0.08251	-0.08251	-0.08251	-0.08251	-0.08251

PITOT TUBE INSPECTION DATA SHEET

Company Name: Akzo Nobel

Pre-sample Date 3/14/07

Post Sample Date 3/21/07

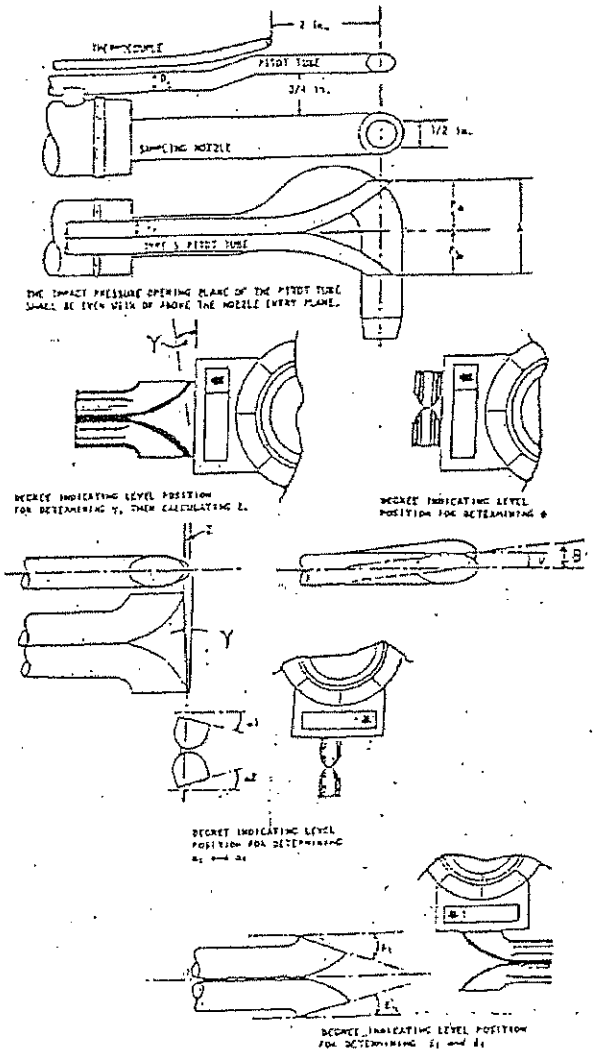

yes	level?	yes
No	obstructions?	No
No	damaged?	No
3	$-10° < \alpha_1 < +10°$	3
3	$-10° < \alpha_2 < +10°$	2
1	$-5° < \beta_1 < +5°$	1
2	$-5° < \beta_2 < +5°$	2
0	γ	0
1	θ	1
.591	A	.591
.296	$1.05\ D_t < P_a < 1.5\ D_t$	.296
.295	$1.05\ D_t < P_b < 1.5\ D_t$	.295
.25	$3/16" \leq D_t \leq 3/8"$	.25
0	$A \tan \gamma < 0.125"$	0
.0103	$A \tan \theta < 0.03125"$	0.0103
yes	$P_a = P_b \pm 0.063"$	yes

Comments: _____

Pitot tube/probe number 35 meets or exceeds all specifications criteria and/or applicable design features* and is hereby assigned a pitot tube calibration factor of 0.84.

Signature [signature]

Date 3/14/07 3/21/07

*See 40 CFR 60, Vol. 42, No. 160, Method 2. Verify the minimum 2 inch setback of the thermocouple and the minimum 3/4 inch separation between the pitot tube and the nozzle as shown at the top of this page.

PITOT TUBE INSPECTION DATA SHEET

Company Name: Radant Granitek. Pre-sample Date _____ Post Sample Date 10/5/07

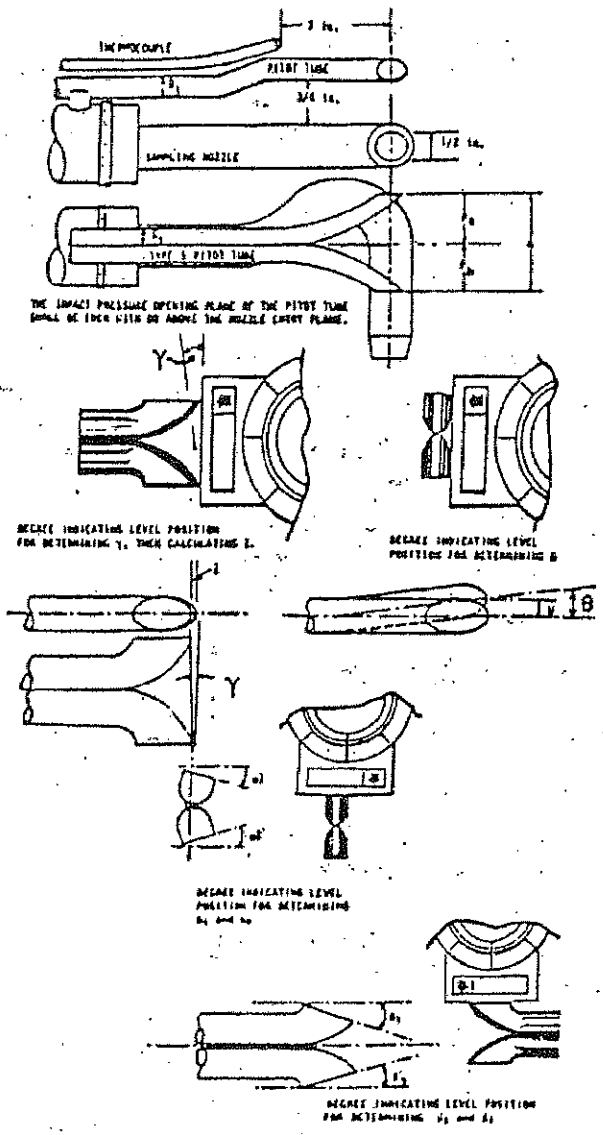

	level?	✓
	obstructions?	No
	damaged?	No
	$-10° < \alpha_1 < +10°$	3
	$-10° < \alpha_2 < +10°$	2
	$-5° < \beta_1 < +5°$	1
	$-5° < \beta_2 < +5°$	2
	γ	0
	θ	1
	A	.591
	$1.05\ D_t < P_a < 1.5\ D_t$	.296
	$1.05\ D_t < P_b < 1.5\ D_t$	.295
	$3/16" \leq D_t \leq 3/8"$	0.25
	$A \tan \gamma < 0.125"$	0
	$A \tan \theta < 0.03125"$	0.0103
	$P_a = P_b \pm 0.063"$	Yes

Comments: _____

Pitot tube/probe number 35 meets or exceeds all specifications criteria and/or applicable design features* and is hereby assigned a pitot tube calibration factor of 0.84.

Signature _____

Date 10/5/07

*See 40 CFR 60, Vol. 42, No. 160, Method 2. Verify the minimum 2 inch setback of the thermocouple and the minimum 3/4 inch separation between the pitot tube and the nozzle as shown at the top of this page.

Barometer Calibrations						
Reference Barometer - Princo Instruments Hg in Glass - Model #453 - Serial #10030						
Date	Time	Temp, F	Watch	Actual	Diff, %	Owner
3/16/07	12:08	70	29.6	29.6	—	R. Taylor
4/21/07	7:32	68	29.3	29.28	0.06 %	T. Armstrong
5/25/07	14:54	74	29.4	29.4	—	T. Armstrong
6/8/07	8:35	73	29.25	29.25	—	T. Armstrong
7/2/07	7:30	76	29.25	29.25	—	T. Armstrong
9/5/07	13:12	80	29.15	29.15	—	T. Armstrong
9/5/07	13:26	81	29.15	29.15	—	R Taylor
9/17/07	13:15	85	29.4	29.4	—	R Taylor

NOZZLE INSPECTION AND MEASUREMENT DATA SHEET

Company Name Madison-Kipp Date Sampled 9/25/07 Nozzle Number .200SS

Presample Inspection

I hereby certify that the above referenced nozzle appears to be round, sharp-edged, free of nicks and dents and is judged acceptable for use at this time.

Last Previously Measured Nozzle Area .0002182 ft^2

signature

Date Measured 9/25/07

date 9/25/07

Postsample Measurement

Measure three diameters as shown; measurement is in inches; record below; perform calculations. *

1. .200 2. .201 3. .199

Average Diameter .200

Area = $\frac{\pi D^2}{4 \times 144}$ = .0002182 ft^2

This area shall be used in data reduction.

signature

date 10/5/07

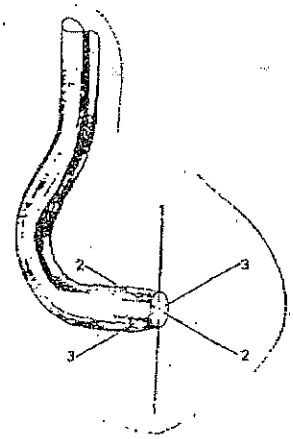

* Maximum allowable difference between largest diameter and smallest diameter is 0.004 inches

Appendix D

Fwd: Re: Project 1060038 Dioxin Data

From: Scott Unze <Scott.Unze@pacelabs.com>
To: armst@ix.netcom.com
Subject: Fwd: Re: Project 1060038 Dioxin Data
Date: Oct 24, 2007 4:15 PM

Tom,

All portions of the sample are combined during the extraction process. Everything was received in fine order and the individual components were processed as one sample.

Please advise if you require anything further.

Thanks

****

Scott Unze
Project Manager
Pace Analytical Services, Inc.
Minneapolis
(612) 607-6383

www.pacelabs.com

>>> Natnael Habte 10/24/07 4:09 PM >>>

>>> <armst@ix.netcom.com> 10/24/07 3:56 PM >>>
Nate:

I did not see any mention of the methylene chloride/acetone samples, the toluene samples, or the filters that were dropped off with the XAD-2 traps. Were thses processed?

Tom Armstrong
214-631-021

-----Original Message-----
>From: Natnael Habte <nhabte@pacelabs.com>
>Sent: Oct 23, 2007 5:26 PM
>To: armst@ix.netcom.com
>Cc: Scott Unze <Scott.Unze@pacelabs.com>
>Subject: Project 1060038 Dioxin Data
>
>
>
>**********
>Nate Habte
>Dioxin Project Coordinator
>Pace Analytical Services, Inc.
>MN Laboratory and Corporate HQ
>1700 Elm Street SE-Suite 200
>MPLS MN 55414
>(W) (612) 607-6407
>(F) (612) 607-6444

><nhabte@pacelabs.com>
><www.pacelabs.com>
>**********
>
>
>*****PacePort*****PacePort*****PacePort***** PacePort*****
>PacePort***** PacePort*****
>
>If you are not using PacePort...why not?!
>Custom formatted data spreadsheets are now at your fingertips!
>Data as soon as it is final...24/7.
>Let me know if you want to register for this handy Data Management
>System.
>
>
>*****Contact your Account Executive or Project Manager & sign up for
>your account today!*****
>
>

This email has been scanned by the MessageLabs Email Security System.
For more information please visit http://www.messagelabs.com/email

Pace Analytical®
www.pacelabs.com

Pace Analytical Services, Inc.
1700 Elm Street
Minneapolis, MN 55414
Phone: 612.607.1700
Fax: 612.607.6444

DETERMINATION OF PCDD/PCDF LEVELS

Prepared for:
Armstrong Environmental, Inc.
Attn: Tom Armstrong
1748 Hlavek Road
Decatur, TX 76234

This report contains 15 pages.

The results reported herein conform to the most current NELAC standards, where applicable, unless otherwise narrated in the body of the report.

Client Project: NA

Purchase Order Number: NA

REPORT OF LABORATORY ANALYSIS

This report shall not be reproduced, except in full,
without the written consent of Pace Analytical Services, Inc.

Pace Analytical®
www.pacelabs.com

Pace Analytical Services, Inc.
1700 Elm Street
Minneapolis, MN 55414
Phone: 612.607.1700
Fax: 612.607.6444

REPORT OF: CHEMICAL ANALYSES

PROJECT: PCDD/PCDF ANALYSES

DATE: October 23, 2007

ISSUED TO: Armstrong Environmental, Inc.
Attn: Tom Armstrong
1748 Hlavek Road
Decatur, TX 76234

REPORT NO: 07-1060038

INTRODUCTION

This report presents the results from the analyses performed on four samples submitted by a representative of Armstrong Environmental, Inc. The samples were analyzed for the presence or absence of polychlorodibenzo-p-dioxins (PCDDs) and polychlorodibenzofurans (PCDFs) using a modified version of USEPA Method 23.

SAMPLE IDENTIFICATION

Client ID	Sample Type	Date Received	Pace ID
R1 Kipp 9/25/07	XAD	10/02/07	1060038001
R1 Kipp 9/25/07	XAD	10/02/07	1060038002
R1 Kipp 9/25/07	XAD	10/02/07	1060038003
Blank 9/25/07	XAD	10/02/07	1060038004

RESULTS

The results from the PCDD/PCDF analyses are included in the following:

Appendix A - Chain of Custody Documentation
Appendix B - PCDD/PCDF Analysis Results

DISCUSSION

The recoveries of the isotopically labeled PCDD/PCDF internal standards in the sample extracts ranged from 36-86%. All of the labeled internal standard recoveries obtained for this project were within the target ranges specified in the method. Since the internal standards were added to the samples prior to the extraction step, the data were automatically corrected for recovery and accurate values were obtained.

REPORT OF LABORATORY ANALYSIS
This report shall not be reproduced, except in full,
without the written consent of Pace Analytical Services, Inc.

ACCREDITED IN ACCORDANCE WITH nelac

Pace Analytical®
www.pacelabs.com

Pace Analytical Services, Inc.
1700 Elm Street
Minneapolis, MN 55414
Phone: 612.607.1700
Fax: 612.607.6444

REPORT OF: CHEMICAL ANALYSES

PROJECT: PCDD/PCDF ANALYSES **DATE:** October 23, 2007

PAGE: 2 **REPORT NO:** 07-1060038

DISCUSSION (Cont.)

The recoveries of the PCDD/PCDF surrogate compounds in the field samples ranged from 74-120%. All of the surrogate recovery values obtained for this project were within the 70-130% target range specified in Method 23. These results indicate that no significant breakthrough occurred during sample collection.

A laboratory method blank was prepared and analyzed with the sample batch as part of our routine quality control procedures. The results, found at the beginning of Appendix B, show the blank to be free of PCDDs and PCDFs at the reporting limits. This indicates that the sample preparation procedures did not significantly impact the results of the analyses.

Laboratory quality control PCDD/PCDF spike samples were also prepared with the sample batch using clean XAD that had been fortified with native standard materials. The results, included at the end of Appendix B, show that the recoveries of the spiked native compounds ranged from 89-142%, with relative percent differences of 6.2-27.8%. These results indicate generally high degrees of accuracy and precision for these determinations.

REMARKS

The sample extracts will be retained for a period of 15 days from the date of this report and then discarded unless other arrangements are made. The raw mass spectral data will be archived for a period of not less than one year. Questions regarding the data contained in this report may be directed to the author at the number provided below.

Pace Analytical Services, Inc.

Scott C. Unze
Project Manager, HRMS
(612) 607-6383

REPORT OF LABORATORY ANALYSIS
This report shall not be reproduced, except in full,
without the written consent of Pace Analytical Services, Inc.

Pace Analytical®
www.pacelabs.com

Pace Analytical Services, Inc.
1700 Elm Street
Minneapolis, MN 55414
Phone: 612.607.1700
Fax: 612.607.6444

TABLE 1. 2,3,7,8-TCDD Equivalency Factors (TEFs) for the Polychlorinated Dibenzodioxins and Dibenzofurans

Number	Compound(s)	TEF
1	2,3,7,8-TCDD	1.00
2	1,2,3,7,8-PeCDD	0.50
3	1,2,3,6,7,8-HxCDD	0.1
4	1,2,3,7,8,9-HxCDD	0.1
5	1,2,3,4,7,8-HxCDD	0.1
6	1,2,3,4,6,7,8-HpCDD	0.01
7	OCDD	0.001
8	* Total - TCDD	0.0
9	* Total - PeCDD	0.0
10	* Total - HxCDD	0.0
11	* Total - HpCDD	0.0
12	2,3,7,8-TCDF	0.10
13	1,2,3,7,8-PeCDF	0.05
14	2,3,4,7,8-PeCDF	0.5
15	1,2,3,6,7,8-HxCDF	0.1
16	1,2,3,7,8,9-HxCDF	0.1
17	1,2,3,4,7,8-HxCDF	0.1
18	2,3,4,6,7,8-HxCDF	0.1
19	1,2,3,4,6,7,8-HpCDF	0.01
20	1,2,3,4,7,8,9-HpCDF	0.01
21	OCDF	0.001
22	* Total - TCDF	0.0
23	* Total - PeCDF	0.0
24	* Total - HxCDF	0.0
25	* Total - HpCDF	0.0

*Excluding the 2,3,7,8-substituted isomers.

Reference: 1989 ITEFs

This report shall not be reproduced, except in full,
without the written consent of Pace Analytical Services, Inc.

Pace Analytical®
www.pacelabs.com

Pace Analytical Services, Inc.
1700 Elm Street
Minneapolis, MN 55414
Phone: 612.607.1700
Fax: 612.607.6444

APPENDIX A

This report shall not be reproduced, except in full,
without the written consent of Pace Analytical Services, Inc.

Pace Analytical®
www.pacelabs.com

CHAIN-OF-CUSTODY / Analytical Request Document

The Chain-of-Custody is a LEGAL DOCUMENT. All relevant fields must be completed accurately.

1060038

Page: of

1140794

Section A Required Client Information:
Company: Armstrong Environmental
Address: 1248 Flauck Rd
Decatur, TX 76234
Email To: Armst@ix.netcom.com
Phone: 214 6X 0021 Fax: 940 627-7740
Requested Due Date/TAT:

Section B Required Project Information:
Report To:
Copy To:
Purchase Order No.:
Project Name:
Project Number:

Section C Invoice Information:
Attention:
Company Name:
Address:
Pace Quote Reference:
Pace Project Manager:
Pace Profile #:

REGULATORY AGENCY
☐ NPDES ☐ GROUND WATER ☐ DRINKING WATER
☐ UST ☐ RCRA ☐ OTHER ____
Site Location STATE: ____

Section D Required Client Information

Matrix Codes MATRIX / CODE: Drinking Water DW; Water WT; Waste Water WW; Product P; Soil/Solid SL; Oil OL; Wipe WP; Air AR; Tissue TS; Other OT

SAMPLE ID (A-Z, 0-9 / ,-) Sample IDs MUST BE UNIQUE

ITEM #	SAMPLE ID	MATRIX CODE (see valid codes to left)	SAMPLE TYPE (G=GRAB C=COMP)	COLLECTED Composite Start DATE	Composite Start TIME	Composite End/Grab DATE	Composite End/Grab TIME	SAMPLE TEMP AT COLLECTION	# OF CONTAINERS	Unpreserved	H_2SO_4	HNO_3	HCl	NaOH	$Na_2S_2O_3$	Methanol	Other	Analysis Test	Residual Chlorine (Y/N)	Pace Project No./ Lab I.D.
1	R1 Kipp 9/25/07			9/25																1060038001
2	R2 Kipp 9/25/07			9/25																002
3	R3 Kipp 9/25/07			9/25																003
4	Blank 9/25/07			9/25																004
5																				
6																				
7																				
8																				
9																				
10																				
11																				
12																				

Requested Analysis Filtered (Y/N)

ADDITIONAL COMMENTS	RELINQUISHED BY / AFFILIATION	DATE	TIME	ACCEPTED BY / AFFILIATION	DATE	TIME	SAMPLE CONDITIONS			
	[signature]	10/2/07	8:55	J. Richardson	10/2/07	8:55	19.0	N	N	Y
							22.0			
							19.3			

Temp in °C | Received on Ice (Y/N) | Custody Sealed Cooler (Y/N) | Samples Intact (Y/N)

ORIGINAL

SAMPLER NAME AND SIGNATURE: Tom Armstrong
PRINT Name of SAMPLER: [signature]
SIGNATURE of SAMPLER: [signature] DATE Signed (MM/DD/YY): 10/2/07

*Important Note: By signing this form you are accepting Pace's NET 30 day payment terms and agreeing to late charges of 1.5% per month for any invoices not paid within 30 days.

F-ALL-Q-020rev.07, 15-May-2007

Pace Analytical®
www.pacelabs.com

Pace Analytical Services, Inc.
1700 Elm Street
Minneapolis, MN 55414
Phone: 612.607.1700
Fax: 612.607.6444

APPENDIX B

REPORT OF LABORATORY ANALYSIS
This report shall not be reproduced, except in full,
without the written consent of Pace Analytical Services, Inc.

ACCREDITED IN ACCORDANCE WITH nelac

Pace Analytical Services, Inc.
1700 Elm Street - Suite 200
Minneapolis, MN 55414

Tel: 612-607-1700
Fax: 612-607-6444

Pace Analytical™

Method 23 Blank Analysis Results

Client - Armstrong Environmental, Inc.

Lab Sample ID	BLANK-14374	Matrix	XAD
Filename	F71007B_09	Dilution	NA
Amount Extracted	1.00 Sample	Extracted	10/03/2007
ICAL Date	05/06/2007	Analyzed	10/07/2007 21:58
CCal Filename(s)	F71007B_03	Injected By	BAL

Native Isomers	Conc ng/S	EMPC ng/S	LRL ng/S
2,3,7,8-TCDF	ND	----	0.0020
Total TCDF	ND	----	0.0020
2,3,7,8-TCDD	ND	----	0.0020
Total TCDD	ND	----	0.0020
1,2,3,7,8-PeCDF	ND	----	0.0100
2,3,4,7,8-PeCDF	ND	----	0.0100
Total PeCDF	ND	----	0.0100
1,2,3,7,8-PeCDD	ND	----	0.0100
Total PeCDD	ND	----	0.0100
1,2,3,4,7,8-HxCDF	ND	----	0.0100
1,2,3,6,7,8-HxCDF	ND	----	0.0100
2,3,4,6,7,8-HxCDF	ND	----	0.0100
1,2,3,7,8,9-HxCDF	ND	----	0.0100
Total HxCDF	ND	----	0.0100
1,2,3,4,7,8-HxCDD	ND	----	0.0100
1,2,3,6,7,8-HxCDD	ND	----	0.0100
1,2,3,7,8,9-HxCDD	ND	----	0.0100
Total HxCDD	ND	----	0.0100
1,2,3,4,6,7,8-HpCDF	ND	----	0.0100
1,2,3,4,7,8,9-HpCDF	ND	----	0.0100
Total HpCDF	ND	----	0.0100
1,2,3,4,6,7,8-HpCDD	ND	----	0.0100
Total HpCDD	ND	----	0.0100
OCDF	ND	----	0.0200
OCDD	ND	----	0.0200

Internal Standards	ng's Added	Percent Recovery
2,3,7,8-TCDF-13C	2.00	76
2,3,7,8-TCDD-13C	2.00	70
1,2,3,7,8-PeCDF-13C	2.00	73
1,2,3,7,8-PeCDD-13C	2.00	66
1,2,3,6,7,8-HxCDF-13C	2.00	75
1,2,3,6,7,8-HxCDD-13C	2.00	78
1,2,3,4,6,7,8-HpCDF-13C	2.00	63
1,2,3,4,6,7,8-HpCDD-13C	2.00	50
OCDD-13C	4.00	38
Recovery Standards		
1,2,3,4-TCDD-13C	2.00	NA
1,2,3,7,8,9-HxCDD-13C	2.00	NA
Surrogates		
2,3,7,8-TCDD-37Cl4	2.00	122
2,3,4,7,8-PeCDF-13C	2.00	99
1,2,3,4,7,8-HxCDF-13C	2.00	90
1,2,3,4,7,8-HxCDD-13C	2.00	88
1,2,3,4,7,8,9-HpCDF-13C	2.00	85

Total 2,3,7,8-TCDD
Equivalence: 0.00 ng/S
(Using ITE Factors)

Conc = Concentration (Totals include 2,3,7,8-substituted isomers).
EMPC = Estimated Maximum Possible Concentration
LRL = Lower Reporting Limit
J = Concentration detected is below the calibration range
Nn = Value obtained from additional analysis
A = Detection Limit based on signal to noise
P = Recovery outside of target range
I = Interference
E = PCDE Interference
ND = Not Detected
NA = Not Applicable
NC = Not Calculated

Report No.....1060038

REPORT OF LABORATORY ANALYSIS

This report shall not be reproduced, except in full,
without the written consent of Pace Analytical Services, Inc.

Pace Analytical Services, Inc.
1700 Elm Street - Suite 200
Minneapolis, MN 55414

Tel: 612-607-1700
Fax: 612-607-6444

Pace Analytical™

Method 23 Sample Analysis Results

Client - Armstrong Environmental, Inc.

Client's Sample ID	R1 KIPP 9/25/07		
Lab Sample ID	1060038001		
Filename	F71008A_10	Matrix	Air
Injected By	BAL	Dilution	NA
Amount Extracted	1.00 Sample	Collected	09/25/2007
ICAL Date	05/06/2007	Received	10/02/2007
CCal Filename(s)	F71008A_02	Extracted	10/03/2007
Method Blank ID	BLANK-14374	Analyzed	10/08/2007 10:31

Native Isomers	Conc ng/S	EMPC ng/S	LRL ng/S		Internal Standards	ng's Added	Percent Recovery
2,3,7,8-TCDF	0.140	-----	0.0180	A	2,3,7,8-TCDF-13C	2.00	70
Total TCDF	4.100	-----	0.0020		2,3,7,8-TCDD-13C	2.00	60
					1,2,3,7,8-PeCDF-13C	2.00	68
2,3,7,8-TCDD	0.012	-----	0.0095	A	1,2,3,7,8-PeCDD-13C	2.00	64
Total TCDD	0.730	-----	0.0020		1,2,3,6,7,8-HxCDF-13C	2.00	73
					1,2,3,6,7,8-HxCDD-13C	2.00	74
1,2,3,7,8-PeCDF	0.240	-----	0.0210	A	1,2,3,4,6,7,8-HpCDF-13C	2.00	57
2,3,4,7,8-PeCDF	0.290	-----	0.0240	A	1,2,3,4,6,7,8-HpCDD-13C	2.00	42
Total PeCDF	3.500	-----	0.0100		OCDD-13C	4.00	43
1,2,3,7,8-PeCDD	0.042	-----	0.0120	JA	Recovery		
Total PeCDD	0.660	-----	0.0100		Standards		
					1,2,3,4-TCDD-13C	2.00	NA
1,2,3,4,7,8-HxCDF	0.420	-----	0.0150	A	1,2,3,7,8,9-HxCDD-13C	2.00	NA
1,2,3,6,7,8-HxCDF	0.320	-----	0.0190	A			
2,3,4,6,7,8-HxCDF	0.340	-----	0.0160	A	Surrogates		
1,2,3,7,8,9-HxCDF	0.130	-----	0.0330	A	2,3,7,8-TCDD-37Cl4	2.00	120
Total HxCDF	3.200	-----	0.0100		2,3,4,7,8-PeCDF-13C	2.00	93
					1,2,3,4,7,8-HxCDF-13C	2.00	92
1,2,3,4,7,8-HxCDD	0.046	-----	0.0140	JA	1,2,3,4,7,8-HxCDD-13C	2.00	80
1,2,3,6,7,8-HxCDD	0.055	-----	0.0170	A	1,2,3,4,7,8,9-HpCDF-13C	2.00	92
1,2,3,7,8,9-HxCDD	-----	0.034	0.0110	IA			
Total HxCDD	0.820	-----	0.0100				
1,2,3,4,6,7,8-HpCDF	1.100	-----	0.0560	A	Total 2,3,7,8-TCDD		
1,2,3,4,7,8,9-HpCDF	-----	0.160	0.0610	IA	Equivalence: 0.35 ng/S		
Total HpCDF	2.000	-----	0.0100		(Using ITE Factors)		
1,2,3,4,6,7,8-HpCDD	0.350	-----	0.0330	A			
Total HpCDD	0.750	-----	0.0100				
OCDF	1.100	-----	0.0220	A			
OCDD	0.410	-----	0.0340	A			

Conc = Concentration (Totals include 2,3,7,8-substituted isomers).
EMPC = Estimated Maximum Possible Concentration
LRL = Lower Reporting Limit
J = Concentration detected is below the calibration range
B = Less than 10 times higher than method blank level
P = Recovery outside of target range
Nn = Value obtained from additional analysis
A = Detection Limit based on signal to noise

I = Interference
E = PCDE Interference
S = Saturated signal
ND = Not Detected
NA = Not Applicable
NC = Not Calculated

Report No.....1060038

REPORT OF LABORATORY ANALYSIS

This report shall not be reproduced, except in full,
without the written consent of Pace Analytical Services, Inc.

Pace Analytical Services, Inc.
1700 Elm Street - Suite 200
Minneapolis, MN 55414

Tel: 612-607-1700
Fax: 612-607-6444

Pace Analytical™

Method 23 Sample Analysis Results

Client - Armstrong Environmental, Inc.

Client's Sample ID	R2 KIPP 9/25/07		
Lab Sample ID	1060038002		
Filename	U71013A_07	Matrix	Air
Injected By	BAL	Dilution	NA
Amount Extracted	1.00 Sample	Collected	09/25/2007
ICAL Date	07/02/2007	Received	10/02/2007
CCal Filename(s)	U71013A_01	Extracted	10/03/2007
Method Blank ID	BLANK-14374	Analyzed	10/13/2007 15:31

Native Isomers	Conc ng/S	EMPC ng/S	LRL ng/S		Internal Standards	ng's Added	Percent Recovery
2,3,7,8-TCDF	0.140	-----	0.0069	A	2,3,7,8-TCDF-13C	2.00	80
Total TCDF	5.600	-----	0.0020		2,3,7,8-TCDD-13C	2.00	68
					1,2,3,7,8-PeCDF-13C	2.00	82
2,3,7,8-TCDD	-----	0.016	0.0038	IA	1,2,3,7,8-PeCDD-13C	2.00	78
Total TCDD	1.200	-----	0.0020		1,2,3,6,7,8-HxCDF-13C	2.00	69
					1,2,3,6,7,8-HxCDD-13C	2.00	67
1,2,3,7,8-PeCDF	0.260	-----	0.0100		1,2,3,4,6,7,8-HpCDF-13C	2.00	62
2,3,4,7,8-PeCDF	0.420	-----	0.0100		1,2,3,4,6,7,8-HpCDD-13C	2.00	53
Total PeCDF	5.300	-----	0.0100		OCDD-13C	4.00	54
1,2,3,7,8-PeCDD	0.066	-----	0.0100		Recovery		
Total PeCDD	1.200	-----	0.0100		Standards		
					1,2,3,4-TCDD-13C	2.00	NA
1,2,3,4,7,8-HxCDF	0.550	-----	0.0100		1,2,3,7,8,9-HxCDD-13C	2.00	NA
1,2,3,6,7,8-HxCDF	0.470	-----	0.0100				
2,3,4,6,7,8-HxCDF	0.120	-----	0.0100		Surrogates		
1,2,3,7,8,9-HxCDF	0.200	-----	0.0100		2,3,7,8-TCDD-37Cl4	2.00	109
Total HxCDF	4.700	-----	0.0100		2,3,4,7,8-PeCDF-13C	2.00	94
					1,2,3,4,7,8-HxCDF-13C	2.00	93
1,2,3,4,7,8-HxCDD	0.045	-----	0.0140	JA	1,2,3,4,7,8-HxCDD-13C	2.00	103
1,2,3,6,7,8-HxCDD	0.083	-----	0.0220	A	1,2,3,4,7,8,9-HpCDF-13C	2.00	91
1,2,3,7,8,9-HxCDD	0.062	-----	0.0230	A			
Total HxCDD	0.790	-----	0.0100				
1,2,3,4,6,7,8-HpCDF	1.800	-----	0.0100	A	Total 2,3,7,8-TCDD		
1,2,3,4,7,8,9-HpCDF	0.320	-----	0.0120	A	Equivalence: 0.45 ng/S		
Total HpCDF	2.600	-----	0.0100		(Using ITE Factors)		
1,2,3,4,6,7,8-HpCDD	0.410	-----	0.0100				
Total HpCDD	0.850	-----	0.0100				
OCDF	1.600	-----	0.0200				
OCDD	0.500	-----	0.0200				

Conc = Concentration (Totals include 2,3,7,8-substituted isomers).
EMPC = Estimated Maximum Possible Concentration
LRL = Lower Reporting Limit
J = Concentration detected is below the calibration range
B = Less than 10 times higher than method blank level
P = Recovery outside of target range
Nn = Value obtained from additional analysis
A = Detection Limit based on signal to noise

I = Interference
E = PCDE Interference
S = Saturated signal
ND = Not Detected
NA = Not Applicable
NC = Not Calculated

Report No.....1060038

REPORT OF LABORATORY ANALYSIS

This report shall not be reproduced, except in full,
without the written consent of Pace Analytical Services, Inc.

Pace Analytical Services, Inc.
1700 Elm Street - Suite 200
Minneapolis, MN 55414

Tel: 612-607-1700
Fax: 612- 607-6444

Pace Analytical™

Method 23 Sample Analysis Results

Client - Armstrong Environmental, Inc.

Client's Sample ID	R3 KIPP 9/25/07		
Lab Sample ID	1060038003		
Filename	F71008A_08	Matrix	Air
Injected By	BAL	Dilution	NA
Amount Extracted	1.00 Sample	Collected	09/25/2007
ICAL Date	05/06/2007	Received	10/02/2007
CCal Filename(s)	F71008A_02	Extracted	10/03/2007
Method Blank ID	BLANK-14374	Analyzed	10/08/2007 08:56

Native Isomers	Conc ng/S	EMPC ng/S	LRL ng/S		Internal Standards	ng's Added	Percent Recovery
2,3,7,8-TCDF	0.089	-----	0.0078	A	2,3,7,8-TCDF-13C	2.00	80
Total TCDF	4.200	-----	0.0020		2,3,7,8-TCDD-13C	2.00	71
					1,2,3,7,8-PeCDF-13C	2.00	77
2,3,7,8-TCDD	0.017	-----	0.0062	A	1,2,3,7,8-PeCDD-13C	2.00	71
Total TCDD	0.770	-----	0.0020		1,2,3,6,7,8-HxCDF-13C	2.00	77
					1,2,3,6,7,8-HxCDD-13C	2.00	76
1,2,3,7,8-PeCDF	0.180	-----	0.0160	A	1,2,3,4,6,7,8-HpCDF-13C	2.00	66
2,3,4,7,8-PeCDF	0.290	-----	0.0130	A	1,2,3,4,6,7,8-HpCDD-13C	2.00	49
Total PeCDF	3.300	-----	0.0100		OCDD-13C	4.00	50
1,2,3,7,8-PeCDD	0.040	-----	0.0140	JA	Recovery Standards		
Total PeCDD	0.730	-----	0.0100		1,2,3,4-TCDD-13C	2.00	NA
					1,2,3,7,8,9-HxCDD-13C	2.00	NA
1,2,3,4,7,8-HxCDF	0.380	-----	0.0160	A			
1,2,3,6,7,8-HxCDF	0.340	-----	0.0160	A			
2,3,4,6,7,8-HxCDF	0.330	-----	0.0200	A	Surrogates		
1,2,3,7,8,9-HxCDF	0.140	-----	0.0240	A	2,3,7,8-TCDD-37Cl4	2.00	107
Total HxCDF	3.300	-----	0.0100		2,3,4,7,8-PeCDF-13C	2.00	87
					1,2,3,4,7,8-HxCDF-13C	2.00	86
1,2,3,4,7,8-HxCDD	0.042	-----	0.0160	JA	1,2,3,4,7,8-HxCDD-13C	2.00	81
1,2,3,6,7,8-HxCDD	0.062	-----	0.0100		1,2,3,4,7,8,9-HpCDF-13C	2.00	76
1,2,3,7,8,9-HxCDD	0.046	-----	0.0150	JA			
Total HxCDD	0.870	-----	0.0100				
1,2,3,4,6,7,8-HpCDF	1.300	-----	0.0400	A	Total 2,3,7,8-TCDD		
1,2,3,4,7,8,9-HpCDF	0.210	-----	0.0690	A	Equivalence: 0.35 ng/S		
Total HpCDF	2.400	-----	0.0100		(Using ITE Factors)		
1,2,3,4,6,7,8-HpCDD	0.380	-----	0.0220	A			
Total HpCDD	0.610	-----	0.0100				
OCDF	1.600	-----	0.0330	A			
OCDD	0.490	-----	0.0200				

Conc = Concentration (Totals include 2,3,7,8-substituted isomers).
EMPC = Estimated Maximum Possible Concentration
LRL = Lower Reporting Limit
J = Concentration detected is below the calibration range
B = Less than 10 times higher than method blank level
P = Recovery outside of target range
Nn = Value obtained from additional analysis
A = Detection Limit based on signal to noise

I = Interference
E = PCDE Interference
S = Saturated signal
ND = Not Detected
NA = Not Applicable
NC = Not Calculated

Report No.....1060038

REPORT OF LABORATORY ANALYSIS

This report shall not be reproduced, except in full,
without the written consent of Pace Analytical Services, Inc.

Pace Analytical Services, Inc.
1700 Elm Street - Suite 200
Minneapolis, MN 55414

Tel: 612-607-1700
Fax: 612- 607-6444

Pace Analytical™

Method 23 Sample Analysis Results

Client - Armstrong Environmental, Inc.

Client's Sample ID	BLANK 9/25/07		
Lab Sample ID	1060038004		
Filename	F71008A_07	Matrix	Air
Injected By	BAL	Dilution	NA
Amount Extracted	1.00 Sample	Collected	09/25/2007
ICAL Date	05/06/2007	Received	10/02/2007
CCal Filename(s)	F71008A_02	Extracted	10/03/2007
Method Blank ID	BLANK-14374	Analyzed	10/08/2007 08:09

Native Isomers	Conc ng/S	EMPC ng/S	LRL ng/S		Internal Standards	ng's Added	Percent Recovery
2,3,7,8-TCDF	ND	-----	0.0032	A	2,3,7,8-TCDF-13C	2.00	79
Total TCDF	ND	-----	0.0020		2,3,7,8-TCDD-13C	2.00	69
					1,2,3,7,8-PeCDF-13C	2.00	72
2,3,7,8-TCDD	ND	-----	0.0032	A	1,2,3,7,8-PeCDD-13C	2.00	61
Total TCDD	ND	-----	0.0020		1,2,3,6,7,8-HxCDF-13C	2.00	78
					1,2,3,6,7,8-HxCDD-13C	2.00	86
1,2,3,7,8-PeCDF	ND	-----	0.0100		1,2,3,4,6,7,8-HpCDF-13C	2.00	62
2,3,4,7,8-PeCDF	ND	-----	0.0100		1,2,3,4,6,7,8-HpCDD-13C	2.00	44
Total PeCDF	ND	-----	0.0100		OCDD-13C	4.00	36
1,2,3,7,8-PeCDD	ND	-----	0.0100		Recovery Standards		
Total PeCDD	ND	-----	0.0100		1,2,3,4-TCDD-13C	2.00	NA
1,2,3,4,7,8-HxCDF	ND	-----	0.0100		1,2,3,7,8,9-HxCDD-13C	2.00	NA
1,2,3,6,7,8-HxCDF	ND	-----	0.0100				
2,3,4,6,7,8-HxCDF	ND	-----	0.0100		Surrogates		
1,2,3,7,8,9-HxCDF	ND	-----	0.0100		2,3,7,8-TCDD-37Cl4	2.00	113
Total HxCDF	ND	-----	0.0100		2,3,4,7,8-PeCDF-13C	2.00	85
					1,2,3,4,7,8-HxCDF-13C	2.00	84
1,2,3,4,7,8-HxCDD	ND	-----	0.0100		1,2,3,4,7,8-HxCDD-13C	2.00	74
1,2,3,6,7,8-HxCDD	ND	-----	0.0100		1,2,3,4,7,8,9-HpCDF-13C	2.00	78
1,2,3,7,8,9-HxCDD	ND	-----	0.0100				
Total HxCDD	ND	-----	0.0100				
1,2,3,4,6,7,8-HpCDF	ND	-----	0.0100		Total 2,3,7,8-TCDD		
1,2,3,4,7,8,9-HpCDF	ND	-----	0.0100		Equivalence: 0.00 ng/S		
Total HpCDF	ND	-----	0.0100		(Using ITE Factors)		
1,2,3,4,6,7,8-HpCDD	ND	-----	0.0100	A			
Total HpCDD	ND	-----	0.0100				
OCDF	ND	-----	0.0200				
OCDD	-----	0.024	0.0200	I			

Conc = Concentration (Totals include 2,3,7,8-substituted isomers).
EMPC = Estimated Maximum Possible Concentration
LRL = Lower Reporting Limit
J = Concentration detected is below the calibration range
B = Less than 10 times higher than method blank level
P = Recovery outside of target range
Nn = Value obtained from additional analysis
A = Detection Limit based on signal to noise

I = Interference
E = PCDE Interference
S = Saturated signal
ND = Not Detected
NA = Not Applicable
NC = Not Calculated

Report No.....1060038

REPORT OF LABORATORY ANALYSIS

This report shall not be reproduced, except in full,
without the written consent of Pace Analytical Services, Inc.

Pace Analytical Services, Inc.
1700 Elm Street - Suite 200
Minneapolis, MN 55414

Tel: 612-607-1700
Fax: 612- 607-6444

Pace Analytical™

Method 23 Laboratory Control Spike Results

Client - Armstrong Environmental, Inc.

Lab Sample ID	LCS-14375		
Filename	F71007B_04	Matrix	XAD
Total Amount Extracted	1.00 Sample	Dilution	NA
ICAL Date	05/06/2007	Extracted	10/03/2007
CCal Filename(s)	F71007B_03	Analyzed	10/07/2007 18:05
Method Blank ID	BLANK-14374	Injected By	BAL

Native Isomers	Qs (ng)	Qm (ng)	% Rec.	Internal Standards	ng's Added	Percent Recovery
2,3,7,8-TCDF	0.20	0.24	119	2,3,7,8-TCDF-13C	2.00	64
				2,3,7,8-TCDD-13C	2.00	59
				1,2,3,7,8-PeCDF-13C	2.00	59
2,3,7,8-TCDD	0.20	0.23	116	1,2,3,7,8-PeCDD-13C	2.00	57
				1,2,3,6,7,8-HxCDF-13C	2.00	64
				1,2,3,6,7,8-HxCDD-13C	2.00	67
1,2,3,7,8-PeCDF	1.00	1.23	123	1,2,3,4,6,7,8-HpCDF-13C	2.00	58
2,3,4,7,8-PeCDF	1.00	1.14	114	1,2,3,4,6,7,8-HpCDD-13C	2.00	44
				OCDD-13C	4.00	36
1,2,3,7,8-PeCDD	1.00	1.13	113	Recovery Standards		
				1,2,3,4-TCDD-13C	2.00	NA
1,2,3,4,7,8-HxCDF	1.00	1.08	108	1,2,3,7,8,9-HxCDD-13C	2.00	NA
1,2,3,6,7,8-HxCDF	1.00	1.17	117			
2,3,4,6,7,8-HxCDF	1.00	1.20	120	Surrogates		
1,2,3,7,8,9-HxCDF	1.00	1.12	112	2,3,7,8-TCDD-37Cl4	2.00	120
				2,3,4,7,8-PeCDF-13C	2.00	104
				1,2,3,4,7,8-HxCDF-13C	2.00	94
1,2,3,4,7,8-HxCDD	1.00	0.95	95	1,2,3,4,7,8-HxCDD-13C	2.00	88
1,2,3,6,7,8-HxCDD	1.00	1.15	115	1,2,3,4,7,8,9-HpCDF-13C	2.00	82
1,2,3,7,8,9-HxCDD	1.00	1.01	101			
1,2,3,4,6,7,8-HpCDF	1.00	1.16	116			
1,2,3,4,7,8,9-HpCDF	1.00	1.01	101			
1,2,3,4,6,7,8-HpCDD	1.00	1.31	131			
OCDF	2.00	2.73	136			
OCDD	2.00	2.83	142			

Qs = Quantity Spiked
Qm = Quantity Measured
Rec. = Recovery (Expressed as Percent)
P = Outside the method specified target recovery range
X = Background subtracted value
NA = Not Applicable
Nn = Value obtained from additional analysis

Report No.....1060038

REPORT OF LABORATORY ANALYSIS

This report shall not be reproduced, except in full,
without the written consent of Pace Analytical Services, Inc.

Pace Analytical Services, Inc.
1700 Elm Street - Suite 200
Minneapolis, MN 55414

Tel: 612-607-1700
Fax: 612- 607-6444

Pace Analytical™

Method 23 Laboratory Control Spike Results

Client - Armstrong Environmental, Inc.

Lab Sample ID	LCSD-14376		
Filename	F71007B_05	Matrix	XAD
Total Amount Extracted	1.00 Sample	Dilution	NA
ICAL Date	05/06/2007	Extracted	10/03/2007
CCal Filename(s)	F71007B_03	Analyzed	10/07/2007 18:50
Method Blank ID	BLANK-14374	Injected By	BAL

Native Isomers	Qs (ng)	Qm (ng)	% Rec.	Internal Standards	ng's Added	Percent Recovery
2,3,7,8-TCDF	0.20	0.21	106	2,3,7,8-TCDF-13C	2.00	80
				2,3,7,8-TCDD-13C	2.00	72
				1,2,3,7,8-PeCDF-13C	2.00	77
2,3,7,8-TCDD	0.20	0.22	109	1,2,3,7,8-PeCDD-13C	2.00	73
				1,2,3,6,7,8-HxCDF-13C	2.00	78
				1,2,3,6,7,8-HxCDD-13C	2.00	80
1,2,3,7,8-PeCDF	1.00	1.02	102	1,2,3,4,6,7,8-HpCDF-13C	2.00	69
2,3,4,7,8-PeCDF	1.00	1.00	100	1,2,3,4,6,7,8-HpCDD-13C	2.00	61
				OCDD-13C	4.00	53
1,2,3,7,8-PeCDD	1.00	1.01	101	Recovery Standards		
				1,2,3,4-TCDD-13C	2.00	NA
1,2,3,4,7,8-HxCDF	1.00	0.94	94	1,2,3,7,8,9-HxCDD-13C	2.00	NA
1,2,3,6,7,8-HxCDF	1.00	1.02	102			
2,3,4,6,7,8-HxCDF	1.00	1.00	100	Surrogates		
1,2,3,7,8,9-HxCDF	1.00	0.97	97	2,3,7,8-TCDD-37Cl4	2.00	111
				2,3,4,7,8-PeCDF-13C	2.00	90
				1,2,3,4,7,8-HxCDF-13C	2.00	80
1,2,3,4,7,8-HxCDD	1.00	0.89	89	1,2,3,4,7,8-HxCDD-13C	2.00	80
1,2,3,6,7,8-HxCDD	1.00	1.06	106	1,2,3,4,7,8,9-HpCDF-13C	2.00	80
1,2,3,7,8,9-HxCDD	1.00	0.94	94			
1,2,3,4,6,7,8-HpCDF	1.00	1.05	105			
1,2,3,4,7,8,9-HpCDF	1.00	0.90	90			
1,2,3,4,6,7,8-HpCDD	1.00	0.99	99			
OCDF	2.00	2.41	120			
OCDD	2.00	2.53	126			

Qs = Quantity Spiked
Qm = Quantity Measured
Rec. = Recovery (Expressed as Percent)
P = Outside the method specified target recovery range
X = Background subtracted value
NA = Not Applicable
Nn = Value obtained from additional analysis

Report No.....1060038

REPORT OF LABORATORY ANALYSIS

This report shall not be reproduced, except in full,
without the written consent of Pace Analytical Services, Inc.

Pace Analytical®
www.pacelabs.com

Pace Analytical Services, Inc.
1700 Elm Street
Minneapolis, MN 55414
Phone: 612.607.1700
Fax: 612.607.6444

SPIKE RECOVERY RELATIVE PERCENT DIFFERENCE (RPD) RESULTS

Client..... Armstrong Environmental

SPIKE 1 ID..... LCS-14375
SPIKE 1 Filename..... F71007B_04
SPIKE 2 ID..... LCS-14376
SPIKE 2 Filename..... F71007B_05

COMPOUND	SPIKE 1 REC,%	SPIKE 2 REC,%	RPD,%
2378-TCDF	119	106	11.6
2378-TCDD	116	109	6.2
12378-PeCDF	123	102	18.7
23478-PeCDF	114	100	13.1
12378-PeCDD	113	101	11.2
123478-HxCDF	108	94	13.9
123678-HxCDF	117	102	13.7
234678-HxCDF	120	100	18.2
123789-HxCDF	112	97	14.4
123478-HxCDD	95	89	6.5
123678-HxCDD	115	106	8.1
123789-HxCDD	101	94	7.2
1234678-HpCDF	116	105	10.0
1234789-HpCDF	101	90	11.5
1234678-HpCDD	131	99	27.8
OCDF	136	120	12.5
OCDD	142	126	11.9

REC = Percent Recovered
RPD = The difference between the two values divided by the average.
NA = Not Applicable

Report No..... 1060038

REPORT OF LABORATORY ANALYSIS

This report shall not be reproduced, except in full,
without the written consent of Pace Analytical Services, Inc.

9/25/07 1:56 PM FURNACE 2 MADISON-KIPP CORPORATION

VIBRATORY FEEDER					NITROGEN					CHLORINE					SETTINGS WHILE CHLORINE RAN				
Start Date	Start Time	Stop Date	Stop Time	Total Time	Start Date	Start Time	Stop Date	Stop Time	Total Time	Start Date	Start Time	Stop Date	Stop Time	Total Time	Pool Level	Charge Well Temp	Pump Amps	Mag Percent	Cl Used each test
Test 1																			13.3
9/25/2007	8:20:00 AM	9/25/2007	8:21:08 AM	0:01:08	9/24/2007	5:19:22 PM	9/25/2007	8:24:12 AM	15:04:50	9/25/2007	8:24:12 AM	9/25/2007	8:31:13 AM	0:07:01	2	1362	9.8	.2142	
9/25/2007	8:32:22 AM	9/25/2007	8:34:35 AM	0:02:13	9/25/2007	8:31:13 AM	9/25/2007	8:37:39 AM	0:06:26	9/25/2007	8:37:39 AM	9/25/2007	8:44:10 AM	0:06:31	2	1372	9.9	.2138	
9/25/2007	8:45:16 AM	9/25/2007	8:46:27 AM	0:01:11	9/25/2007	8:44:10 AM	9/25/2007	8:49:31 AM	0:05:21	9/25/2007	8:49:31 AM	9/25/2007	8:55:51 AM	0:06:20	1	1379	9.9	.2127	
9/25/2007	8:56:55 AM	9/25/2007	8:58:34 AM	0:01:39	9/25/2007	8:55:51 AM	9/25/2007	9:01:38 AM	0:05:47	9/25/2007	9:01:38 AM	9/25/2007	9:08:32 AM	0:06:54	1	1381	9.9	.2120	
9/25/2007	9:09:36 AM	9/25/2007	9:11:23 AM	0:01:47	9/25/2007	9:08:32 AM	9/25/2007	9:14:27 AM	0:05:55	9/25/2007	9:14:27 AM	9/25/2007	9:20:38 AM	0:06:11	2	1382	9.8	.2280	
9/25/2007	9:21:50 AM	9/25/2007	9:22:31 AM	0:00:41	9/25/2007	9:20:38 AM	9/25/2007	9:46:27 AM	0:25:49										
Test 2																			13.1
9/25/2007	10:17:02 AM	9/25/2007	10:18:43 AM	0:01:41	9/25/2007	9:59:43 AM	9/25/2007	10:22:25 AM	0:22:42	9/25/2007	10:22:25 AM	9/25/2007	10:28:45 AM	0:06:20	3	1388	9.8	.1857	
9/25/2007	10:29:51 AM	9/25/2007	10:31:58 AM	0:02:07	9/25/2007	10:28:45 AM	9/25/2007	10:35:04 AM	0:06:19	9/25/2007	10:35:04 AM	9/25/2007	10:41:02 AM	0:05:58	3	1368	9.9	.1844	
9/25/2007	10:42:06 AM	9/25/2007	10:43:50 AM	0:01:44	9/25/2007	10:41:02 AM	9/25/2007	10:46:54 AM	0:05:52	9/25/2007	10:46:54 AM	9/25/2007	10:52:55 AM	0:06:01	4	1365	9.8	.1832	
9/25/2007	10:53:59 AM	9/25/2007	10:55:46 AM	0:01:47	9/25/2007	10:52:55 AM	9/25/2007	10:58:49 AM	0:05:54	9/25/2007	10:58:49 AM	9/25/2007	11:04:41 AM	0:05:52	4	1364	9.8	.1820	
9/25/2007	11:05:45 AM	9/25/2007	11:08:15 AM	0:02:30	9/25/2007	11:04:41 AM	9/25/2007	11:12:04 AM	0:07:23	9/25/2007	11:12:04 AM	9/25/2007	11:17:27 AM	0:05:23	4	1359	9.7	.1808	
Test 3																			13.1
9/25/2007	12:00:54 PM	9/25/2007	12:02:31 PM	0:01:37	9/25/2007	11:17:27 AM	9/25/2007	12:05:43 PM	0:48:16	9/25/2007	12:05:43 PM	9/25/2007	12:12:14 PM	0:06:31	6	1393	9.6	.1795	
9/25/2007	12:13:18 PM	9/25/2007	12:15:13 PM	0:01:55	9/25/2007	12:12:14 PM	9/25/2007	12:18:17 PM	0:06:03	9/25/2007	12:18:17 PM	9/25/2007	12:24:16 PM	0:05:59	7	1376	9.8	.1782	
9/25/2007	12:25:21 PM	9/25/2007	12:27:03 PM	0:01:42	9/25/2007	12:24:16 PM	9/25/2007	12:31:12 PM	0:06:56	9/25/2007	12:31:12 PM	9/25/2007	12:37:16 PM	0:06:04	7	1354	9.9	.1770	
9/25/2007	12:38:40 PM	9/25/2007	12:40:42 PM	0:02:02	9/25/2007	12:37:16 PM	9/25/2007	12:43:50 PM	0:06:34	9/25/2007	12:43:50 PM	9/25/2007	12:49:54 PM	0:06:04	3	1381	9.8	.1857	
9/25/2007	12:50:58 PM	9/25/2007	12:52:46 PM	0:01:48	9/25/2007	12:49:54 PM	9/25/2007	12:55:52 PM	0:05:58	9/25/2007	12:55:52 PM	9/25/2007	1:00:55 PM	0:05:03	3	1381	9.9	.1847	
9/25/2007	1:02:01 PM	9/25/2007	1:03:22 PM	0:01:21															

Madison-Kipp Corporation
RCI-2 Source Test
September 25, 2007
Internal Runaround Throughput

Test # 1

Time	Gross	Tare	Net
0820	1225	385	840
	2087	388	1699
	1610	391	1219
	699	391	308
0924			4066

(60/64)(4066) = 3812 lbs.

Test # 2

Time	Gross	Tare	Net
1015	990	391	599
	1323	380	943
	2565	383	2182
	705	383	322
1117			4046

(60/62)(4046) = 3915 lbs.

Test # 3

Time	Gross	Tare	Net
1200	2560	383	2177
	2068	368	1700
1303			3877

(60/63)(3877) = 3692 lbs.

(3812 + 3915 + 3692) = 11,419
(11,419)/(3) = 3806 lbs.
(3806 lbs.)/(2000) = 1.9 tons per hour