R5-2014-0104710000604

SBIR Phase I Final Report

Feasibility of Monitoring Heavy Metal Emissions from a Coal-Fired Thermal Hazardous Waste Incinerator Using a Multi-Metal Continuous Emissions Monitor

EPA Contract No.: EP-D-07-026

August 30th, 2007

Submitted by:

Cooper Environmental Services LLC

10180 SW Nimbus Ave, Ste J6

Portland, OR 97223

R5-2014-0104710000604

SBIR Phase I Final Report

Feasibility of Monitoring Heavy Metal Emissions from a Coal-Fired Thermal Hazardous Waste Incinerator Using a Multi-Metal Continuous Emissions Monitor

EPA Contract No.: EP-D-07-026

August 30th, 2007

Submitted by:

Cooper Environmental Services LLC

10180 SW Nimbus Ave, Ste J6

Portland, OR 97223

Project Summary

Combined uncertainties in current techniques for estimating metal concentrations at area sources can be 100% or more. These large uncertainties would be eliminated if continuous measurements of emissions were possible. To meet this need, Cooper Environmental Services LLC (CES) has developed a multi-metal continuous emissions monitor (the Xact CEMS™). The Xact CEMS has already been EPA-approved for compliance at a gas-fired hazardous waste incinerator. The objective of this research is to evaluate the feasibility of using the Xact to measure hazardous metal emissions on a coal-fired hazardous waste incinerator. Specifically, CES sought to answer three questions regarding the Xact's performance at a coal-fired facility:

1. Are Xact measurements impacted by the chemistry of the stack effluent?
2. Can the Xact accurately measure over a concentration range including the emission limits?
3. Can the techniques used previously to validate the Xact be used on a coal-burning facility?

To answer these questions, CES tested the Xact's ability to take measurements at the EPA's Multi-Pollutant Control Research Facility in Research Triangle Park, North Carolina, which was used to simulate a full scale coal-fired hazardous waste incinerator. During testing, the Xact sampled stack gas that was dynamically spiked with reference concentrations of arsenic (As), cadmium (Cd), chromium (Cr), lead (Pb), and mercury (Hg) at three concentration levels spanning existing source emission limits: approximately 27, 92 and 250 μg/dscm. CES also spiked ambient air at the highest concentration level.

CES used several criteria to help evaluate the Xact's performance at the test coal-fire incinerator. First, the ratio of Xact measured concentrations to the reference concentrations was determined for each data point. Ratios between 0.80 and 1.20 indicate that the accuracy of the Xact's measurements was not impacted by the chemistry of the stack effluent. Second, a comparison was made between ratios determined for flue gas and for ambient air. If no significantly difference was detected, than the Xact's measurements were not impacted by the chemical characteristics of the coal-fired flue gas. Finally, a linear regression analysis was performed on the Xact measured concentrations versus the reference concentrations for the experimental concentration range. If the slope of this line was between 0.85 and 1.15 and the correlation coefficient was greater than 0.90, than the Xact's measurements were accurate over a concentration range that included the emission limit.

The results of the experiment showed that all criteria were met: measured-to-reference ratios were between 0.80 and 1.20, linear regression slopes were between 0.85 and 1.15, correlation coefficients were all 0.99, and there was no difference between measurements taken with flue gas or with ambient air. CES therefore concludes that (1) chemical composition of the stack gas from a coal-fired facility does not impact the Xact's measurements, (2) the Xact can accurately measure metals over a concentration range that includes the emission limit, and (3) the validation techniques used in this experiment were successful on a coal-fired furnace. It is therefore feasible to use the Xact instrument to measure metal emissions from coal-fired sources including: hazardous waste incinerators, coal-fired power plants, municipal and medical waste incinerators, industrial furnaces and boilers, and primary and secondary metal smelters. Currently, there are no other continuous emissions monitors capable of measuring multiple metals at area sources.

Project Summary

Combined uncertainties in current techniques for estimating metal concentrations at area sources can be 100% or more. These large uncertainties would be eliminated if continuous measurements of emissions were possible. To meet this need, Cooper Environmental Services LLC (CES) has developed a multi-metal continuous emissions monitor (the Xact CEMS™). The Xact CEMS has already been EPA-approved for compliance at a gas-fired hazardous waste incinerator. The objective of this research is to evaluate the feasibility of using the Xact to measure hazardous metal emissions on a coal-fired hazardous waste incinerator. Specifically, CES sought to answer three questions regarding the Xact's performance at a coal-fired facility:

1. Are Xact measurements impacted by the chemistry of the stack effluent?
2. Can the Xact accurately measure over a concentration range including the emission limits?
3. Can the techniques used previously to validate the Xact be used on a coal-burning facility?

To answer these questions, CES tested the Xact's ability to take measurements at the EPA's Multi-Pollutant Control Research Facility in Research Triangle Park, North Carolina, which was used to simulate a full scale coal-fired hazardous waste incinerator. During testing, the Xact sampled stack gas that was dynamically spiked with reference concentrations of arsenic (As), cadmium (Cd), chromium (Cr), lead (Pb), and mercury (Hg) at three concentration levels spanning existing source emission limits: approximately 27, 92 and 250 μg/dscm. CES also spiked ambient air at the highest concentration level.

CES used several criteria to help evaluate the Xact's performance at the test coal-fire incinerator. First, the ratio of Xact measured concentrations to the reference concentrations was determined for each data point. Ratios between 0.80 and 1.20 indicate that the accuracy of the Xact's measurements was not impacted by the chemistry of the stack effluent. Second, a comparison was made between ratios determined for flue gas and for ambient air. If no significantly difference was detected, than the Xact's measurements were not impacted by the chemical characteristics of the coal-fired flue gas. Finally, a linear regression analysis was performed on the Xact measured concentrations versus the reference concentrations for the experimental concentration range. If the slope of this line was between 0.85 and 1.15 and the correlation coefficient was greater than 0.90, than the Xact's measurements were accurate over a concentration range that included the emission limit.

The results of the experiment showed that all criteria were met: measured-to-reference ratios were between 0.80 and 1.20, linear regression slopes were between 0.85 and 1.15, correlation coefficients were all 0.99, and there was no difference between measurements taken with flue gas or with ambient air. CES therefore concludes that (1) chemical composition of the stack gas from a coal-fired facility does not impact the Xact's measurements, (2) the Xact can accurately measure metals over a concentration range that includes the emission limit, and (3) the validation techniques used in this experiment were successful on a coal-fired furnace. It is therefore feasible to use the Xact instrument to measure metal emissions from coal-fired sources including: hazardous waste incinerators, coal-fired power plants, municipal and medical waste incinerators, industrial furnaces and boilers, and primary and secondary metal smelters. Currently, there are no other continuous emissions monitors capable of measuring multiple metals at area sources.

1.0 Introduction

1.1 Problem Significance

Eight of the 33 hazardous air pollutants (HAP) identified by the U.S. Environmental Protection Agency (EPA) as posing the greatest potential environmental health threat in urban areas are metals and their compounds.[1] Negative environmental and health effects caused by metals include respiratory and pulmonary disorders, neurotoxicity and cancer.[2,3] Hazardous metals are unique in that they will not biodegrade; once released into the environment, they will always be available for re-introduction into the air, water and food chain. Monitoring HAP emissions, especially metal compounds, is an important part of reducing exposure pathways and thus protecting human health and the environment.

The Hazardous Waste Combustor Maximum Achievable Control Technology (HWC MACT) currently regulates six enumerated metals directly (arsenic, beryllium, cadmium, chromium, lead and mercury) and additionally regulates another five "nonenumerated" metals (antimony, cobalt, manganese, nickel, and selenium) using particulate matter (PM) as a surrogate.[4] Unfortunately, the emission levels of these metals from the nation's hazardous waste incinerators are mostly estimates because of limitations in monitoring technology. Under the current MACT rule, emissions of the enumerated metals are estimated based on control efficiencies determined for each class of metals (mercury, semi-volatile, and low volatile) during a performance test and the estimated metal feed rates during normal operations. The control efficiency is determined by spiking a known amount of metal(s) at a known rate and measuring the resulting concentration using an EPA reference method, Method 29.[5] The determined control efficiency is then used for the next five years, at the end of which another performance test is required. Sources of uncertainty in the control efficiency may result from Method 29, which has a measurement error of about 15%,[6,7] and from the assumption that the control efficiency remains the same over the entire five year span. During normal operations, the feed rate is determined by sampling various drums or solid waste to be burned. The uncertainties from this process result from two assumptions:

1. That the waste container(s) sampled is representative of others from the same source.

2. That the sub-sample taken from a particular waste container for analysis is representative of the waste in that container.

Thus, combined uncertainties in control efficiency and feed rate can result in errors in uncertainties in emission estimates on the order of 100% or more.

These large uncertainties in metals emissions would be eliminated if continuous or nearly-continuous measurements of emissions were possible. The result would be a better understanding of the contribution of hazardous waste incineration to ambient levels of toxic metals and a better understanding of the contribution of hazardous waste incinerators' impact on the health of those in the immediate vicinity. Cooper Environmental Services LLC (CES) has already developed a multi-metal continuous emissions monitor (CEM) that is currently accepted by the U.S. EPA for compliance purposes at one gas-fired incinerator.[8] Extending the demonstrated capabilities of this instrument to other types of hazardous waste incinerators may

1.0 Introduction

1.1 Problem Significance

Eight of the 33 hazardous air pollutants (HAP) identified by the U.S. Environmental Protection Agency (EPA) as posing the greatest potential environmental health threat in urban areas are metals and their compounds.[1] Negative environmental and health effects caused by metals include respiratory and pulmonary disorders, neurotoxicity and cancer.[2,3] Hazardous metals are unique in that they will not biodegrade; once released into the environment, they will always be available for re-introduction into the air, water and food chain. Monitoring HAP emissions, especially metal compounds, is an important part of reducing exposure pathways and thus protecting human health and the environment.

The Hazardous Waste Combustor Maximum Achievable Control Technology (HWC MACT) currently regulates six enumerated metals directly (arsenic, beryllium, cadmium, chromium, lead and mercury) and additionally regulates another five "nonenumerated" metals (antimony, cobalt, manganese, nickel, and selenium) using particulate matter (PM) as a surrogate.[4] Unfortunately, the emission levels of these metals from the nation's hazardous waste incinerators are mostly estimates because of limitations in monitoring technology. Under the current MACT rule, emissions of the enumerated metals are estimated based on control efficiencies determined for each class of metals (mercury, semi-volatile, and low volatile) during a performance test and the estimated metal feed rates during normal operations. The control efficiency is determined by spiking a known amount of metal(s) at a known rate and measuring the resulting concentration using an EPA reference method, Method 29.[5] The determined control efficiency is then used for the next five years, at the end of which another performance test is required. Sources of uncertainty in the control efficiency may result from Method 29, which has a measurement error of about 15%,[6,7] and from the assumption that the control efficiency remains the same over the entire five year span. During normal operations, the feed rate is determined by sampling various drums or solid waste to be burned. The uncertainties from this process result from two assumptions:

1. That the waste container(s) sampled is representative of others from the same source.

2. That the sub-sample taken from a particular waste container for analysis is representative of the waste in that container.

Thus, combined uncertainties in control efficiency and feed rate can result in errors in uncertainties in emission estimates on the order of 100% or more.

These large uncertainties in metals emissions would be eliminated if continuous or nearly-continuous measurements of emissions were possible. The result would be a better understanding of the contribution of hazardous waste incineration to ambient levels of toxic metals and a better understanding of the contribution of hazardous waste incinerators' impact on the health of those in the immediate vicinity. Cooper Environmental Services LLC (CES) has already developed a multi-metal continuous emissions monitor (CEM) that is currently accepted by the U.S. EPA for compliance purposes at one gas-fired incinerator.[8] Extending the demonstrated capabilities of this instrument to other types of hazardous waste incinerators may

encourage its use at other facilities, and in turn contribute to a better understanding of hazardous metals emissions.

1.2 Background

There have been several attempts over the past decade to develop a multi-metal continuous emissions monitoring system. These attempts have included CEMs based on laser-induced breakdown spectroscopy and atomic absorption spectroscopy.[9,10,11] However, none of the CEMs based on these approaches are commercially available nor have they been approved for compliance purposes.

Over the last decade, CES has also developed a multi-metal CEM based on X-ray fluorescence (XRF) spectroscopy. This CEM, called the Xact CEMS™ (hereafter referred to as "the Xact"), was recently approved by the EPA for compliance purposes on a gas-fired incinerator as defined in an alternative monitoring petition.[8] To demonstrate the Xact's abilities on a gas-fired thermal hazardous waste, the instrument was tested with EPA Method 301[12] (M301), the procedure by which new emission technologies are validated by the U.S. EPA. For the test, the Xact was challenges with an aerosol containing a known metal concentration generated using CES' Quantitative reference Aerosol Generator (QAG). The QAG, which itself has been validated using M301, delivers a traceable-to NIST aerosol into stack effluent.[13] During M301 testing of the Xact, three concentration levels (20, 60, and 130 μg/dscm) of five metals (arsenic, cadmium, chromium, lead, and mercury) were spiked using the QAG. The average percent relative accuracy and the linearity of the Xact's response were determined by comparing the Xact's measured concentrations with the QAG's reference concentrations. The average relative percent accuracy of the Xact for all five metals was less than 8.3%.[13] A linear least squares regression analysis showed that the correlation coefficient for all five elements was greater than 0.99 and the average slope was 0.96.[13] The strong linear relationship between the concentrations reported by the Xact and the QAG reference concentration confirms the linearity of the Xact's response and demonstrates that the instrument is accurate and precise over a wide range of concentrations.

1.3 Research Objectives

The objective of this experiment is to demonstrate the feasibility of using the Xact CEMS to measure metals emissions from a coal-burning thermal hazardous waste facility. The ability of the Xact to measure metal emission levels at new types of sources is most likely to be impacted by the trapping efficiency of its reactive filter tape. The trapping efficiency, in turn, is most likely to be affected the following physical and chemical characteristics of the source effluent:

- SO_x and NO_x emission levels
- PM levels
- Moisture content
- Acid gas levels (e.g. HCl)
- Temperature

The Xact has already been successfully validated on a gas-fired thermal hazardous waste incinerator, however, in terms of these key effluent characteristics, the facility does not represent

encourage its use at other facilities, and in turn contribute to a better understanding of hazardous metals emissions.

1.2 Background

There have been several attempts over the past decade to develop a multi-metal continuous emissions monitoring system. These attempts have included CEMs based on laser-induced breakdown spectroscopy and atomic absorption spectroscopy.[9,10,11] However, none of the CEMs based on these approaches are commercially available nor have they been approved for compliance purposes.

Over the last decade, CES has also developed a multi-metal CEM based on X-ray fluorescence (XRF) spectroscopy. This CEM, called the Xact CEMS™ (hereafter referred to as "the Xact"), was recently approved by the EPA for compliance purposes on a gas-fired incinerator as defined in an alternative monitoring petition.[8] To demonstrate the Xact's abilities on a gas-fired thermal hazardous waste, the instrument was tested with EPA Method 301[12] (M301), the procedure by which new emission technologies are validated by the U.S. EPA. For the test, the Xact was challenges with an aerosol containing a known metal concentration generated using CES' Quantitative reference Aerosol Generator (QAG). The QAG, which itself has been validated using M301, delivers a traceable-to NIST aerosol into stack effluent.[13] During M301 testing of the Xact, three concentration levels (20, 60, and 130 μg/dscm) of five metals (arsenic, cadmium, chromium, lead, and mercury) were spiked using the QAG. The average percent relative accuracy and the linearity of the Xact's response were determined by comparing the Xact's measured concentrations with the QAG's reference concentrations. The average relative percent accuracy of the Xact for all five metals was less than 8.3%.[13] A linear least squares regression analysis showed that the correlation coefficient for all five elements was greater than 0.99 and the average slope was 0.96.[13] The strong linear relationship between the concentrations reported by the Xact and the QAG reference concentration confirms the linearity of the Xact's response and demonstrates that the instrument is accurate and precise over a wide range of concentrations.

1.3 Research Objectives

The objective of this experiment is to demonstrate the feasibility of using the Xact CEMS to measure metals emissions from a coal-burning thermal hazardous waste facility. The ability of the Xact to measure metal emission levels at new types of sources is most likely to be impacted by the trapping efficiency of its reactive filter tape. The trapping efficiency, in turn, is most likely to be affected the following physical and chemical characteristics of the source effluent:

- SO_x and NO_x emission levels
- PM levels
- Moisture content
- Acid gas levels (e.g. HCl)
- Temperature

The Xact has already been successfully validated on a gas-fired thermal hazardous waste incinerator, however, in terms of these key effluent characteristics, the facility does not represent

a particularly "challenging" environment. In this experiment, CES tested the Xact on a coal-fired facility because it is likely to represent a much more "challenging" environment. The levels of SO_x, acid gases, and PM are likely to be much higher at a coal-fired incinerator than at a natural gas-fired incinerator. Also, the temperature and moisture (if a wet scrubber is operating) levels may be higher. CES tested the Xact on a coal-fired thermal hazardous waste incinerator because if the instrument can operate successfully there, it is likely that it would operate successfully on numerous other types of sources that burn coal and are regulated for hazardous metals. These other types of sources include but are not limited to the following:

- Municipal waste incinerators
- Medical waste incinerators
- Coal-fired power plants
- Industrial furnaces and boilers
- Primary and secondary metal smelters
- Sewage sludge incinerators

For this research, CES used procedures similar to those used during the M301 validation of the Xact on a gas-fired facility. These procedures included spiking the source effluent with the QAG and measuring the resulting concentration with the Xact. The Phase I feasibility demonstration sought to answer three technical questions regarding the function and validation of the Xact in the more challenging environment of a coal-fired facility.

1. Does the chemistry or physical nature of emissions from coal-fired hazardous waste facilities impact the Xact's ability to continuously and accurately measure metal emissions?

2. Can the Xact accurately measure metal emission levels over a concentration range that includes the emission limit on a coal-fired incinerator?

3. Can the techniques used to validate the Xact on a natural gas-fired hazardous waste combustion facility be used on a coal-burning facility?

CES will determine that it is feasible to use the Xact CEMS for measuring metals at coal-fired hazardous waste facilities if the results of this experiment indicate that the Xact is not impacted by the chemical composition of coal-fired incinerator's emissions and the instrument can take accurate measurements over a concentration range that includes the emission limit. Furthermore, if the Xact instrument itself is shown to be a feasible method of measuring metals in a coal-fired incinerator, than CES will determine it is feasible to apply the Xact validation techniques previously used natural gas-fired hazardous waste to a coal-fired incinerator.

a particularly "challenging" environment. In this experiment, CES tested the Xact on a coal-fired facility because it is likely to represent a much more "challenging" environment. The levels of SO_x, acid gases, and PM are likely to be much higher at a coal-fired incinerator than at a natural gas-fired incinerator. Also, the temperature and moisture (if a wet scrubber is operating) levels may be higher. CES tested the Xact on a coal-fired thermal hazardous waste incinerator because if the instrument can operate successfully there, it is likely that it would operate successfully on numerous other types of sources that burn coal and are regulated for hazardous metals. These other types of sources include but are not limited to the following:

- Municipal waste incinerators
- Medical waste incinerators
- Coal-fired power plants
- Industrial furnaces and boilers
- Primary and secondary metal smelters
- Sewage sludge incinerators

For this research, CES used procedures similar to those used during the M301 validation of the Xact on a gas-fired facility. These procedures included spiking the source effluent with the QAG and measuring the resulting concentration with the Xact. The Phase I feasibility demonstration sought to answer three technical questions regarding the function and validation of the Xact in the more challenging environment of a coal-fired facility.

1. Does the chemistry or physical nature of emissions from coal-fired hazardous waste facilities impact the Xact's ability to continuously and accurately measure metal emissions?

2. Can the Xact accurately measure metal emission levels over a concentration range that includes the emission limit on a coal-fired incinerator?

3. Can the techniques used to validate the Xact on a natural gas-fired hazardous waste combustion facility be used on a coal-burning facility?

CES will determine that it is feasible to use the Xact CEMS for measuring metals at coal-fired hazardous waste facilities if the results of this experiment indicate that the Xact is not impacted by the chemical composition of coal-fired incinerator's emissions and the instrument can take accurate measurements over a concentration range that includes the emission limit. Furthermore, if the Xact instrument itself is shown to be a feasible method of measuring metals in a coal-fired incinerator, than CES will determine it is feasible to apply the Xact validation techniques previously used natural gas-fired hazardous waste to a coal-fired incinerator.

2.0 Experimental Design

2.1 Experimental Set-Up

CES used EPA's Multi-Pollutant Control Research Facility (MPCRF) combustor in Research Triangle Park, NC to simulate a coal-fired hazardous waste incinerator. The MPCRF is a pilot-scale combustor operated by the Air Pollution Technology Branch (APTB) of the EPA's National Risk Management Research Laboratory. The MPCRF is able to fire pulverized coal, distillate oil, and/or natural gas at 4 million Btu/hr, yielding flue gas flow at 300°F. The MPCRF is equipped with wet and dry flue gas cleaning systems and closely simulates full-scale emission sources. During this experiment, the combustor was run by Arcadis, a contractor sanctioned by the EPA to run this facility for two days, and burned bituminous coal with no additional waste products. CES withdrew a sample of flue gas from the stack at approximately 100 Lpm from a point downstream of all controls, including an electrostatic precipitator (ESP) and a wet scrubber. The sample effluent was transported from the sampling point to a location approximately 60 feet away using heat-traced one-inch flexible PFA (polyfluoroalkoxy) line. Figure 1 shows a schematic of the experimental setup at this location.

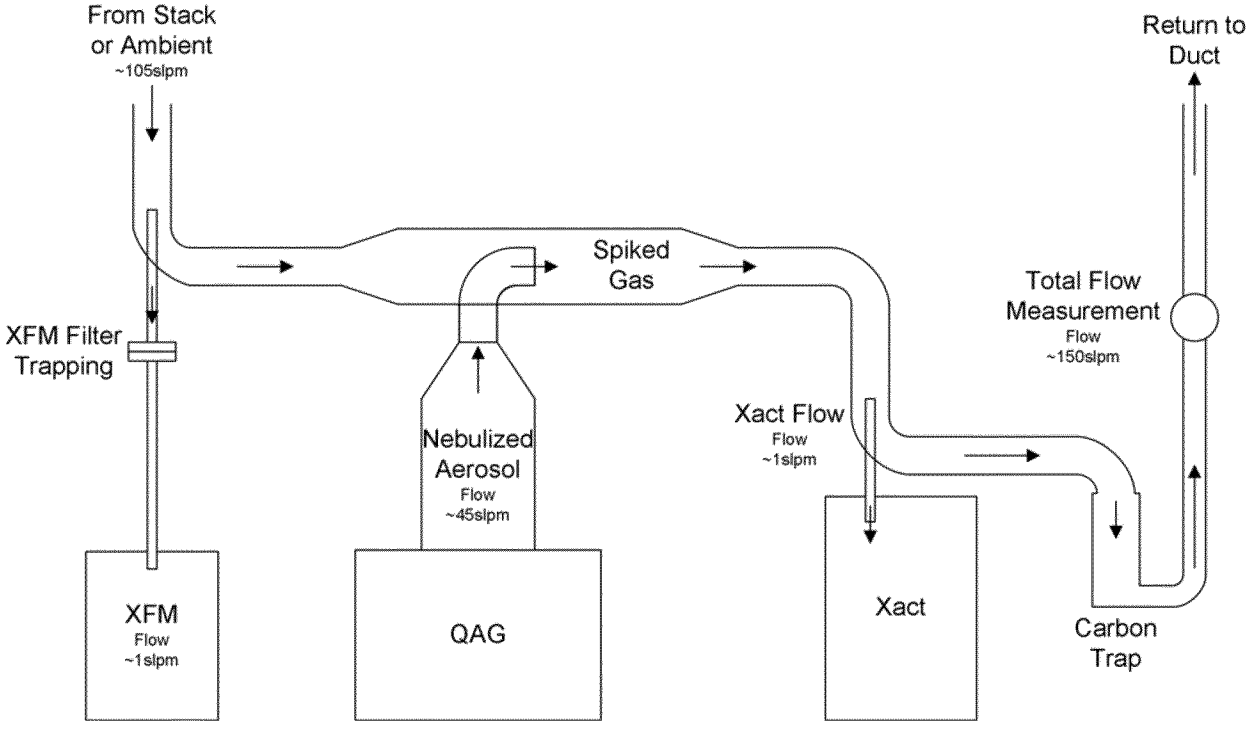

Figure 1. Experimental Set-Up

With the QAG, CES spiked reference concentrations of chromium (Cr), arsenic (As), cadmium (Cd), mercury (Hg) and lead (Pb) into the stack effluent upstream of the Xact at three concentration levels and with a blank (approximately 27, 92 and 250 µg/dscm). Following spiking of the stack gas, CES also spiked ambient air at the highest concentration level. The selected concentration levels thus span a range which includes the existing source emission

2.0 Experimental Design

2.1 Experimental Set-Up

CES used EPA's Multi-Pollutant Control Research Facility (MPCRF) combustor in Research Triangle Park, NC to simulate a coal-fired hazardous waste incinerator. The MPCRF is a pilot-scale combustor operated by the Air Pollution Technology Branch (APTB) of the EPA's National Risk Management Research Laboratory. The MPCRF is able to fire pulverized coal, distillate oil, and/or natural gas at 4 million Btu/hr, yielding flue gas flow at 300°F. The MPCRF is equipped with wet and dry flue gas cleaning systems and closely simulates full-scale emission sources. During this experiment, the combustor was run by Arcadis, a contractor sanctioned by the EPA to run this facility for two days, and burned bituminous coal with no additional waste products. CES withdrew a sample of flue gas from the stack at approximately 100 Lpm from a point downstream of all controls, including an electrostatic precipitator (ESP) and a wet scrubber. The sample effluent was transported from the sampling point to a location approximately 60 feet away using heat-traced one-inch flexible PFA (polyfluoroalkoxy) line. Figure 1 shows a schematic of the experimental setup at this location.

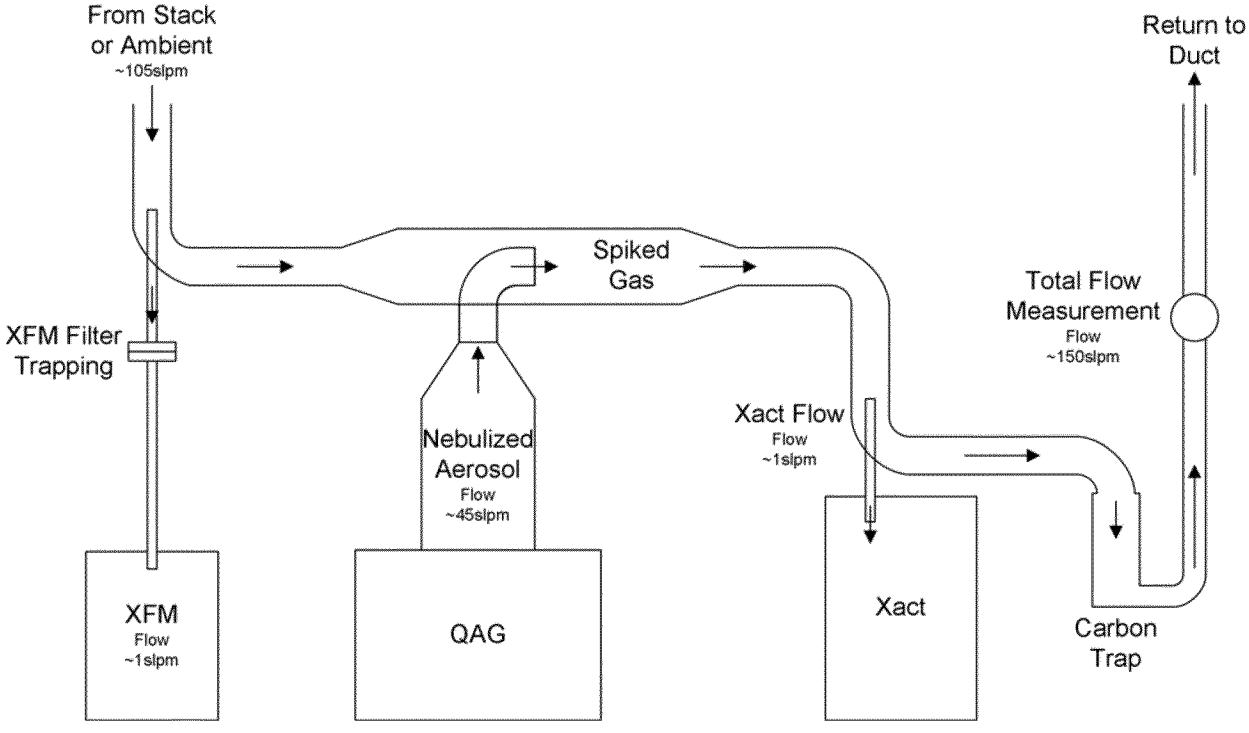

Figure 1. Experimental Set-Up

With the QAG, CES spiked reference concentrations of chromium (Cr), arsenic (As), cadmium (Cd), mercury (Hg) and lead (Pb) into the stack effluent upstream of the Xact at three concentration levels and with a blank (approximately 27, 92 and 250 µg/dscm). Following spiking of the stack gas, CES also spiked ambient air at the highest concentration level. The selected concentration levels thus span a range which includes the existing source emission

limits for all three categories of metals: 92 µg/dscm for low volatile metals (As, Cr), 230 µg/dscm for semi-volatile metals (Pb, Cd), and 130 µg/dscm for Hg.[4]

Because there was likely to be significant blank levels of mercury (and possibly other metals of interest), CES attempted to measure the native concentrations of these metals in the stack effluent upstream of the QAG using a M301-validated X-ray and filter-based method (XFM).[13] Background concentrations for each metal were also measured at the start of each day using the Xact, due to difficulties CES encountered with a new sampling inlet design for the XFM (Section 3.3). During these background measurement periods, the system was operated without the addition of any flow from the QAG.

2.2 Aerosol Generation and Sampling

2.2.1 Aerosol Generation with the QAG

The QAG or Quantitative Aerosol Generator produces a reference concentration of aerosolized particulate metals and metal vapors. It was approved by the EPA for the purpose of testing the Xact.[13] The QAG generates an aerosol by nebulizing a solution containing known concentration(s) of metal analyte(s). Nebulized droplets are dried, and the resulting metal salts and vapors are emitted into stack effluent. The solutions for nebulization are prepared in CES' laboratory by diluting NIST-traceable stock solutions of each metal. The total flow through the system is measured using a 0 to 150 Lpm Rosemount flow meter. The mass loss rate is determined using an analytical balance. The QAG reference aerosol concentration (C_i^{QAG}) is determined using the analyte concentration in the nebulized solution (C_i^s, µg/g), the solution emission rate (R_m, g/min) corrected for vapor loss (R_v, g/min), and the total volume of gas used to create the aerosol (F_t, Lpm).

$$C_i^{QAG} = \frac{C_i^s}{F_t}(R_m - R_v) \qquad \textbf{(Eq. 1)}$$

2.2.2 Sampling with the XFM

The XFM is a multi-metal grab-sample method based on filter technology similar to the Xact. It was validated using M301 testing at the same time as the Xact.[13] The XFM extracts a small sample (about 1 Lpm) which is diluted approximately 1:1 with clean dry air. The sample then passes through two filters contained in a single sampling cassette: a PTFE (polytetrafluoroethylene) filter for particulate-phase metals, and a reactive filter for gas-phase metals. Sample volume is then determined by subtracting dilution flow from the total flow for the total sampling period. After sampling, the filters are shipped back to CES for analysis by XRF. The concentration of metals in the sampled flue gas (C_i^{XFM}) is calculated by dividing the XRF-determined mass (M_i^{XRF}) by the sample volume (V_s).

$$C_i^{XFM} = \frac{M_i^{XRF}}{V_s} \qquad \textbf{(Eq. 2)}$$

limits for all three categories of metals: 92 µg/dscm for low volatile metals (As, Cr), 230 µg/dscm for semi-volatile metals (Pb, Cd), and 130 µg/dscm for Hg.[4]

Because there was likely to be significant blank levels of mercury (and possibly other metals of interest), CES attempted to measure the native concentrations of these metals in the stack effluent upstream of the QAG using a M301-validated X-ray and filter-based method (XFM).[13] Background concentrations for each metal were also measured at the start of each day using the Xact, due to difficulties CES encountered with a new sampling inlet design for the XFM (Section 3.3). During these background measurement periods, the system was operated without the addition of any flow from the QAG.

2.2 Aerosol Generation and Sampling

2.2.1 Aerosol Generation with the QAG

The QAG or Quantitative Aerosol Generator produces a reference concentration of aerosolized particulate metals and metal vapors. It was approved by the EPA for the purpose of testing the Xact.[13] The QAG generates an aerosol by nebulizing a solution containing known concentration(s) of metal analyte(s). Nebulized droplets are dried, and the resulting metal salts and vapors are emitted into stack effluent. The solutions for nebulization are prepared in CES' laboratory by diluting NIST-traceable stock solutions of each metal. The total flow through the system is measured using a 0 to 150 Lpm Rosemount flow meter. The mass loss rate is determined using an analytical balance. The QAG reference aerosol concentration (C_i^{QAG}) is determined using the analyte concentration in the nebulized solution (C_i^s, µg/g), the solution emission rate (R_m, g/min) corrected for vapor loss (R_v, g/min), and the total volume of gas used to create the aerosol (F_t, Lpm).

$$C_i^{QAG} = \frac{C_i^s}{F_t}(R_m - R_v) \qquad \textbf{(Eq. 1)}$$

2.2.2 Sampling with the XFM

The XFM is a multi-metal grab-sample method based on filter technology similar to the Xact. It was validated using M301 testing at the same time as the Xact.[13] The XFM extracts a small sample (about 1 Lpm) which is diluted approximately 1:1 with clean dry air. The sample then passes through two filters contained in a single sampling cassette: a PTFE (polytetrafluoroethylene) filter for particulate-phase metals, and a reactive filter for gas-phase metals. Sample volume is then determined by subtracting dilution flow from the total flow for the total sampling period. After sampling, the filters are shipped back to CES for analysis by XRF. The concentration of metals in the sampled flue gas (C_i^{XFM}) is calculated by dividing the XRF-determined mass (M_i^{XRF}) by the sample volume (V_s).

$$C_i^{XFM} = \frac{M_i^{XRF}}{V_s} \qquad \textbf{(Eq. 2)}$$

For this experiment, the XFM sampled from a point in the sample transport line upstream of the QAG and the Xact (Figure 1). An XFM sample was acquired for 45 minutes out of every hour. Additionally, the XFM was equipped with a silica gel water trap. This trap was weighed before and after each run to determine the concentration of water in the sampled stack gas.

2.2.3 Sampling with the Xact

The Xact is an X-ray fluorescence (XRF) based multi-metals CEMS capable of measuring the concentrations of up to 25 different metals at a time. The Xact was recently approved by the EPA as a compliance instrument on a gas-fired hazardous waste combustor. The Xact extracts a sample of effluent from the source and transports it to a "stilling chamber" where the velocity is slowed or "stilled." The Xact instrument then extracts a small flow from this chamber (0.5 Lpm), which is diluted and then drawn through a reactive filter tape that quantitatively traps both particulate phase and vapor phase metals. Sampling lasts for 15 minutes during which time the sample volume is measured. After sampling, the filter tape is advanced to the XRF analysis area. The deposit is then analyzed by XRF for 15 minutes while the next sample is being collected. The XRF-determined mass (M_i^{Xact}) is then divided by the totalized sample volume (V_t) to give the concentration of the Xact (C_i^{Xact}) in µg/dscm.

$$C_i^{Xact} = \frac{M_i^{Xact}}{V_t} \qquad \textbf{(Eq. 3)}$$

2.3 Feasibility Evaluation

To determine the feasibility of using the Xact in the more challenging environment of a coal-fired facility, the Xact-measured concentrations were evaluated for agreement with a reference concentration (the QAG), and agreement among measured elements across concentration levels, and linearity over concentration range spanning the emission limits of all measured metals. Evaluation of these parameters allowed CES to answer its three technical questions:

1. Is the Xact's performance is impacted by the chemistry and physical nature of emissions from coal-fired hazardous waste facilities?
2. Can the instrument accurately measure metal emission levels over a concentration range that includes the emission limit on a coal-fired incinerator?
3. Can the validation techniques used on the Xact at a natural gas-fired incinerator be applied to a coal-fired incinerator?

2.3.1 Agreement with a Reference Concentration

If the Xact is unaffected by the chemical composition of the stack gas, than theoretically, the concentration measured by the Xact (adjusted for background) should equal the reference concentration spiked by the QAG. The ratio (R_i) of the ith metal as measured by the Xact (C_i^{Xact}) and adjusted for the background concentration (B_i; determined by either the XFM or the Xact) to the concentration spiked by the QAG (C_i^{QAG}) is calculated as follows:

For this experiment, the XFM sampled from a point in the sample transport line upstream of the QAG and the Xact (Figure 1). An XFM sample was acquired for 45 minutes out of every hour. Additionally, the XFM was equipped with a silica gel water trap. This trap was weighed before and after each run to determine the concentration of water in the sampled stack gas.

2.2.3 Sampling with the Xact

The Xact is an X-ray fluorescence (XRF) based multi-metals CEMS capable of measuring the concentrations of up to 25 different metals at a time. The Xact was recently approved by the EPA as a compliance instrument on a gas-fired hazardous waste combustor. The Xact extracts a sample of effluent from the source and transports it to a "stilling chamber" where the velocity is slowed or "stilled." The Xact instrument then extracts a small flow from this chamber (0.5 Lpm), which is diluted and then drawn through a reactive filter tape that quantitatively traps both particulate phase and vapor phase metals. Sampling lasts for 15 minutes during which time the sample volume is measured. After sampling, the filter tape is advanced to the XRF analysis area. The deposit is then analyzed by XRF for 15 minutes while the next sample is being collected. The XRF-determined mass (M_i^{Xact}) is then divided by the totalized sample volume (V_t) to give the concentration of the Xact (C_i^{Xact}) in µg/dscm.

$$C_i^{Xact} = \frac{M_i^{Xact}}{V_t} \qquad \textbf{(Eq. 3)}$$

2.3 Feasibility Evaluation

To determine the feasibility of using the Xact in the more challenging environment of a coal-fired facility, the Xact-measured concentrations were evaluated for agreement with a reference concentration (the QAG), and agreement among measured elements across concentration levels, and linearity over concentration range spanning the emission limits of all measured metals. Evaluation of these parameters allowed CES to answer its three technical questions:

1. Is the Xact's performance is impacted by the chemistry and physical nature of emissions from coal-fired hazardous waste facilities?
2. Can the instrument accurately measure metal emission levels over a concentration range that includes the emission limit on a coal-fired incinerator?
3. Can the validation techniques used on the Xact at a natural gas-fired incinerator be applied to a coal-fired incinerator?

2.3.1 Agreement with a Reference Concentration

If the Xact is unaffected by the chemical composition of the stack gas, than theoretically, the concentration measured by the Xact (adjusted for background) should equal the reference concentration spiked by the QAG. The ratio (R_i) of the ith metal as measured by the Xact (C_i^{Xact}) and adjusted for the background concentration (B_i; determined by either the XFM or the Xact) to the concentration spiked by the QAG (C_i^{QAG}) is calculated as follows:

$$R_i = \frac{C_i^{Xact} - B_i}{C_i^{QAG}} \qquad \textbf{(Eq. 4)}$$

An R_i value between 0.80 and 1.20 indicates that there is good agreement between the measured Xact concentrations and the reference QAG concentrations and that the Xact is unaffected by the chemical composition of the stack gas.

As a further means of determining if Xact measurements are affected by the chemistry of the stack gas, Xact-to-QAG ratios for the spiked stack gas were compared with those for the spiked ambient air at the high concentration level. Ratios within one standard deviation of each other indicate that there is no significant different between measurements made with stack gas and measurements made with ambient air, and the Xact therefore is not impacted by stack chemistry.

2.3.2 Inter-Elemental Agreement

To further evaluate the potential impacts of coal-fired incinerator emissions on the Xact's ability to accurately take measurements over a range of concentrations that includes the emission limit, the ratio (R_{Cd}) of the concentration of each element (C_i) to the concentration of Cd (C_{Cd}) was calculated as follows for each concentration level:

$$R_{Cd} = \frac{C_i}{C_{Cd}} \qquad \textbf{(Eq. 5)}$$

If inter-elemental ratios generally within one standard deviation of each other across all concentration levels, than the Xact can accurately take measurements over the experimental concentration range.

As above for the Xact-to-QAG ratios, inter-elemental ratios for the spiked stack gas were compared with those for the spiked ambient air at the high concentration level. Again, ratios within one standard deviation of each other indicate that there is no significant different between measurements made with stack gas and measurements made with ambient air. If the measurements made by the Xact are not significantly impacted by the chemical composition of the stack gas, one would not expect to see a difference in the inter-elemental ratios between spiked stack gas and spiked ambient air at the high concentration level.

2.3.3 Linearity

For each element across all concentration levels, Xact-reported concentrations for each element were plotted against adjusted QAG reference concentrations, and a linear least squares regression analysis was performed in the form of $y = mx + b$. The slope of the line (m) and the correlation coefficient (r) were used to evaluate linearity. Slope values between 0.85 and 1.15 and correlation coefficient values greater than 0.90 accurate Xact measurements over the experimental concentration range.

$$R_i = \frac{C_i^{Xact} - B_i}{C_i^{QAG}} \qquad \textbf{(Eq. 4)}$$

An R_i value between 0.80 and 1.20 indicates that there is good agreement between the measured Xact concentrations and the reference QAG concentrations and that the Xact is unaffected by the chemical composition of the stack gas.

As a further means of determining if Xact measurements are affected by the chemistry of the stack gas, Xact-to-QAG ratios for the spiked stack gas were compared with those for the spiked ambient air at the high concentration level. Ratios within one standard deviation of each other indicate that there is no significant different between measurements made with stack gas and measurements made with ambient air, and the Xact therefore is not impacted by stack chemistry.

2.3.2 Inter-Elemental Agreement

To further evaluate the potential impacts of coal-fired incinerator emissions on the Xact's ability to accurately take measurements over a range of concentrations that includes the emission limit, the ratio (R_{Cd}) of the concentration of each element (C_i) to the concentration of Cd (C_{Cd}) was calculated as follows for each concentration level:

$$R_{Cd} = \frac{C_i}{C_{Cd}} \qquad \textbf{(Eq. 5)}$$

If inter-elemental ratios generally within one standard deviation of each other across all concentration levels, than the Xact can accurately take measurements over the experimental concentration range.

As above for the Xact-to-QAG ratios, inter-elemental ratios for the spiked stack gas were compared with those for the spiked ambient air at the high concentration level. Again, ratios within one standard deviation of each other indicate that there is no significant different between measurements made with stack gas and measurements made with ambient air. If the measurements made by the Xact are not significantly impacted by the chemical composition of the stack gas, one would not expect to see a difference in the inter-elemental ratios between spiked stack gas and spiked ambient air at the high concentration level.

2.3.3 Linearity

For each element across all concentration levels, Xact-reported concentrations for each element were plotted against adjusted QAG reference concentrations, and a linear least squares regression analysis was performed in the form of $y = mx + b$. The slope of the line (m) and the correlation coefficient (r) were used to evaluate linearity. Slope values between 0.85 and 1.15 and correlation coefficient values greater than 0.90 accurate Xact measurements over the experimental concentration range.

3.0 Pre-Test Laboratory Preparation

3.1 QAG Low Flow Rate Confirmation

The QAG was initially designed to spike into a flow of about 600 Lpm and use about 100 Lpm of spiking gas, giving a spike-to-stack-gas ratio of about 1:6. During testing at the combustor site, a much lower flow rate (around 150 Lpm) was needed while maintaining a reasonable ratio of spike to stack gas. To confirm that the QAG could be used at lower flow rates, the QAG was used to spike Cr, As, Cd, Hg, and Pb into an Xact manufactured in 2007 at an operational flow rate of about 125 Lpm. The same Xact instrument was then spiked at 45 and 30 Lpm. For each 15 minute Xact period, the ratio of the Xact reported concentration was compared to the QAG aerosol concentration. The ratio of the QAG to the Xact for each element at each QAG flow rate was found to be approximately 1.00 (Table 1). These results show that (1) there was great agreement between the QAG concentration and the reported Xact concentration and (2) the QAG can generate a quantitative aerosol at the lower flow rates. This test therefore confirmed that it was possible to use a flow rate of about 150 Lpm at our combustor test site.

Table 1. Results of Testing QAG at Various Flow Rates

Flow (Lpm)	Cr		As		Cd		Hg		Pb	
	Xact/ QAG	STDEV of Xact/Qag	Xact/ QAG	STDEV of Xact/Qag	Xact/ QAG	STDEV of Xact/Qag	Xact/ QAG	STDEV of Xact/Qag	Xact/ QAG	STDEV of Xact/Qag
125	1.02	0.03	1.01	0.07	1.02	0.03	1.00	0.09	1.04	0.03
45	1.00	0.03	1.08	0.02	1.03	0.03	1.08	0.02	1.03	0.02
30	0.99	0.04	1.06	0.05	1.01	0.05	0.95	0.06	1.03	0.05

3.2 CES Xact Calibration

For the testing at the MPCRF, CES used an Xact manufactured in 2004. This Xact was calibrated with XRF thin film standards typically used for the calibration of instruments for PM_{10} and $PM_{2.5}$ filter analysis. The Xact was then challenged using the QAG at three different concentration levels (20, 75, and 180 µg/dscm). Linearity was evaluated for each analyte (Cr, As, Cd, Hg, and Pb), according to Section 2.2.3. For this test, slopes ranged for a low of 0.74 for chromium and cadmium to a high of 0.82 for lead (Pb) with correlation coefficients (r) of greater than 0.99 for all elements. The reason for the discrepancy between the Xact and the QAG is not well understood at this time. However, the 2007 Xact (Section 3.1) did not exhibit this difference. The two units differ in the design of the flow system and the XRF calibration method, indicating two potential sources of the discrepancy. Due to time and cost limitations, the Xact used for testing at the MPCRF could not be retrofitted with components from the newer Xact design. The calibration of the unit was, therefore, adjusted to match the QAG aerosol similar to the way that mercury or SO_2 CEMS are calibrated.[14] Following recalibration, the unit was again challenged using the QAG. The concentrations reported by the Xact were found to be within 3% of the spiked concentration.

3.3 XFM Adjustments

During testing at the MPCRF, CES used the XFM to determine the native concentrations of metals in the stack. The XFM sampling inlet was redesigned to make it usable for this project.

3.0 Pre-Test Laboratory Preparation

3.1 QAG Low Flow Rate Confirmation

The QAG was initially designed to spike into a flow of about 600 Lpm and use about 100 Lpm of spiking gas, giving a spike-to-stack-gas ratio of about 1:6. During testing at the combustor site, a much lower flow rate (around 150 Lpm) was needed while maintaining a reasonable ratio of spike to stack gas. To confirm that the QAG could be used at lower flow rates, the QAG was used to spike Cr, As, Cd, Hg, and Pb into an Xact manufactured in 2007 at an operational flow rate of about 125 Lpm. The same Xact instrument was then spiked at 45 and 30 Lpm. For each 15 minute Xact period, the ratio of the Xact reported concentration was compared to the QAG aerosol concentration. The ratio of the QAG to the Xact for each element at each QAG flow rate was found to be approximately 1.00 (Table 1). These results show that (1) there was great agreement between the QAG concentration and the reported Xact concentration and (2) the QAG can generate a quantitative aerosol at the lower flow rates. This test therefore confirmed that it was possible to use a flow rate of about 150 Lpm at our combustor test site.

Table 1. Results of Testing QAG at Various Flow Rates

Flow (Lpm)	Cr		As		Cd		Hg		Pb	
	Xact/ QAG	STDEV of Xact/Qag	Xact/ QAG	STDEV of Xact/Qag	Xact/ QAG	STDEV of Xact/Qag	Xact/ QAG	STDEV of Xact/Qag	Xact/ QAG	STDEV of Xact/Qag
125	1.02	0.03	1.01	0.07	1.02	0.03	1.00	0.09	1.04	0.03
45	1.00	0.03	1.08	0.02	1.03	0.03	1.08	0.02	1.03	0.02
30	0.99	0.04	1.06	0.05	1.01	0.05	0.95	0.06	1.03	0.05

3.2 CES Xact Calibration

For the testing at the MPCRF, CES used an Xact manufactured in 2004. This Xact was calibrated with XRF thin film standards typically used for the calibration of instruments for PM_{10} and $PM_{2.5}$ filter analysis. The Xact was then challenged using the QAG at three different concentration levels (20, 75, and 180 µg/dscm). Linearity was evaluated for each analyte (Cr, As, Cd, Hg, and Pb), according to Section 2.2.3. For this test, slopes ranged for a low of 0.74 for chromium and cadmium to a high of 0.82 for lead (Pb) with correlation coefficients (r) of greater than 0.99 for all elements. The reason for the discrepancy between the Xact and the QAG is not well understood at this time. However, the 2007 Xact (Section 3.1) did not exhibit this difference. The two units differ in the design of the flow system and the XRF calibration method, indicating two potential sources of the discrepancy. Due to time and cost limitations, the Xact used for testing at the MPCRF could not be retrofitted with components from the newer Xact design. The calibration of the unit was, therefore, adjusted to match the QAG aerosol similar to the way that mercury or SO_2 CEMS are calibrated.[14] Following recalibration, the unit was again challenged using the QAG. The concentrations reported by the Xact were found to be within 3% of the spiked concentration.

3.3 XFM Adjustments

During testing at the MPCRF, CES used the XFM to determine the native concentrations of metals in the stack. The XFM sampling inlet was redesigned to make it usable for this project.

CES tested the redesigned sampling inlet by challenging the XFM with an aerosol of known concentration at three different concentration levels (30, 70, 110 μg/m^3) using the QAG. The XFM-reported concentrations were compared with those of the QAG for each sampled element (Cr, As, Cd, Hg, and Pb). Ratios (Table 2) of the XFM-reported concentration to the QAG were found to be less then 1.00 (a value of 1.00 indicates complete agreement between the XFM and the QAG), with mercury (0.70) and arsenic (0.71) being particularly low. Post-test analyses revealed a likely cold spot and flow disturbance at the point where dilution air enters into the sampling nozzle. This cold spot and flow disturbance causes loss of material to the walls of the sampling inlet tube, particularly for the species most likely to exist in the vapor phase (mercury and arsenic). Because of the problems with the redesigned XFM sampling inlet, CES elected to use the Xact to determine background concentrations while the facility was burning coal. The Xact therefore sampled stack gas prior to spiking on each day of testing at the MPCRF and reported background concentrations. XFM samples were still acquired, however, to check for variability in background concentrations while spiking was occurring.

Table 2: QAG Spiked Concentration Versus XFM Reported Concentration

Concentration Level	QAG Predicted Conc. (μg/m³)					XFM-Reported Conc. (μg/m³)					XFM/QAG				
	Cr	As	Cd	Hg	Pb	Cr	As	Cd	Hg	Pb	Cr	As	Cd	Hg	Pb
Low	31.4	31.4	31.3	31.3	31.3	28.1	25.6	26.2	27.3	26.7	0.89	0.82	0.84	0.87	0.85
	31.6	31.6	31.5	31.5	31.6	28.1	25.4	27.0	25.4	27.4	0.89	0.80	0.86	0.81	0.87
	30.8	30.7	30.7	30.7	30.7	30.7	27.1	30.8	25.3	29.5	1.00	0.88	1.00	0.82	0.96
	30.1	30.1	30.0	30.0	30.0	29.0	24.7	26.9	22.6	28.2	0.96	0.82	0.90	0.75	0.94
Mid	71.8	71.7	71.6	71.6	71.7	67.0	45.5	64.2	55.1	64.7	0.93	0.63	0.90	0.77	0.90
	70.0	69.9	69.8	69.8	69.9	66.3	43.9	65.5	49.7	64.7	0.95	0.63	0.94	0.71	0.93
	68.6	68.6	68.5	68.5	68.5	65.4	45.2	61.4	50.0	64.6	0.95	0.66	0.90	0.73	0.94
	68.6	68.6	68.5	68.5	68.5	66.9	44.6	64.8	49.6	65.5	0.97	0.65	0.95	0.72	0.96
High	110.1	110.0	109.8	109.9	109.9	106.1	72.7	102.4	75.0	104.0	0.96	0.66	0.93	0.68	0.95
	108.0	107.9	107.7	107.7	107.8	106.9	71.3	101.8	69.5	104.8	0.99	0.66	0.95	0.65	0.97
	108.0	107.9	107.7	107.7	107.8	97.3	62.2	83.1	56.2	87.4	0.90	0.58	0.77	0.52	0.81
	108.0	107.9	107.7	107.7	107.8	103.5	66.2	90.9	56.9	55.4	0.96	0.61	0.84	0.53	0.51
AVERAGE											**0.95**	**0.70**	**0.90**	**0.71**	**0.88**

4.0 Test Results and Discussion

4.1 Xact-to-QAG Agreement

Table 3 shows the results of the ratio comparison between QAG and the Xact. The ratio of the Xact to the QAG should be close to unity if the Xact is not significantly impacted by the chemical composition of the stack gas. A value of greater than 1 indicates that the Xact is high relative to the QAG a value of less than 1 indicates the Xact is low relative to the QAG. Table 4 summaries the results with regards to the agreement criteria established in Section 2.3.

CES tested the redesigned sampling inlet by challenging the XFM with an aerosol of known concentration at three different concentration levels (30, 70, 110 μg/m^3) using the QAG. The XFM-reported concentrations were compared with those of the QAG for each sampled element (Cr, As, Cd, Hg, and Pb). Ratios (Table 2) of the XFM-reported concentration to the QAG were found to be less then 1.00 (a value of 1.00 indicates complete agreement between the XFM and the QAG), with mercury (0.70) and arsenic (0.71) being particularly low. Post-test analyses revealed a likely cold spot and flow disturbance at the point where dilution air enters into the sampling nozzle. This cold spot and flow disturbance causes loss of material to the walls of the sampling inlet tube, particularly for the species most likely to exist in the vapor phase (mercury and arsenic). Because of the problems with the redesigned XFM sampling inlet, CES elected to use the Xact to determine background concentrations while the facility was burning coal. The Xact therefore sampled stack gas prior to spiking on each day of testing at the MPCRF and reported background concentrations. XFM samples were still acquired, however, to check for variability in background concentrations while spiking was occurring.

Table 2: QAG Spiked Concentration Versus XFM Reported Concentration

Concentration Level	QAG Predicted Conc. (μg/m³)					XFM-Reported Conc. (μg/m³)					XFM/QAG				
	Cr	As	Cd	Hg	Pb	Cr	As	Cd	Hg	Pb	Cr	As	Cd	Hg	Pb
Low	31.4	31.4	31.3	31.3	31.3	28.1	25.6	26.2	27.3	26.7	0.89	0.82	0.84	0.87	0.85
	31.6	31.6	31.5	31.5	31.6	28.1	25.4	27.0	25.4	27.4	0.89	0.80	0.86	0.81	0.87
	30.8	30.7	30.7	30.7	30.7	30.7	27.1	30.8	25.3	29.5	1.00	0.88	1.00	0.82	0.96
	30.1	30.1	30.0	30.0	30.0	29.0	24.7	26.9	22.6	28.2	0.96	0.82	0.90	0.75	0.94
Mid	71.8	71.7	71.6	71.6	71.7	67.0	45.5	64.2	55.1	64.7	0.93	0.63	0.90	0.77	0.90
	70.0	69.9	69.8	69.8	69.9	66.3	43.9	65.5	49.7	64.7	0.95	0.63	0.94	0.71	0.93
	68.6	68.6	68.5	68.5	68.5	65.4	45.2	61.4	50.0	64.6	0.95	0.66	0.90	0.73	0.94
	68.6	68.6	68.5	68.5	68.5	66.9	44.6	64.8	49.6	65.5	0.97	0.65	0.95	0.72	0.96
High	110.1	110.0	109.8	109.9	109.9	106.1	72.7	102.4	75.0	104.0	0.96	0.66	0.93	0.68	0.95
	108.0	107.9	107.7	107.7	107.8	106.9	71.3	101.8	69.5	104.8	0.99	0.66	0.95	0.65	0.97
	108.0	107.9	107.7	107.7	107.8	97.3	62.2	83.1	56.2	87.4	0.90	0.58	0.77	0.52	0.81
	108.0	107.9	107.7	107.7	107.8	103.5	66.2	90.9	56.9	55.4	0.96	0.61	0.84	0.53	0.51
AVERAGE											**0.95**	**0.70**	**0.90**	**0.71**	**0.88**

4.0 Test Results and Discussion

4.1 Xact-to-QAG Agreement

Table 3 shows the results of the ratio comparison between QAG and the Xact. The ratio of the Xact to the QAG should be close to unity if the Xact is not significantly impacted by the chemical composition of the stack gas. A value of greater than 1 indicates that the Xact is high relative to the QAG a value of less than 1 indicates the Xact is low relative to the QAG. Table 4 summaries the results with regards to the agreement criteria established in Section 2.3.

Table 3. Xact Concentrations, QAG Concentrations and Xact-to-QAG Ratios

Conc. Level	QAG Aerosol Conc (ng/m^3)					Background Corrected Xact Conc. (ng/m^3)					Xact/QAG				
	Cr	As	Cd	Hg	Pb	Cr	As	Cd	Hg	Pb	Cr	As	Cd	Hg	Pb
Blank Spike	0	0	0	0	0	0	0.4	1.5	23.1	0.26	NA	NA	NA	NA	NA
	0	0	0	0	0	0	0	0.88	21.31	0.8	NA	NA	NA	NA	NA
	0	0	0	0	0	0	0.33	1.42	14.28	0	NA	NA	NA	NA	NA
	0	0	0	0	0	0	0	0	10.64	0.66	NA	NA	NA	NA	NA
	0	0	0	0	0	0	0.49	0	8.85	0.12	NA	NA	NA	NA	NA
	0	0	0	0	0	0	0.23	0	7.41	0.12	NA	NA	NA	NA	NA
	0	0	0	0	0	0	0.43	1.08	6.28	0.43	NA	NA	NA	NA	NA
Low	27.58	27.56	27.49	27.53	27.60	29.96	28.21	28.94	31.30	26.17	1.09	1.02	1.05	1.14	0.95
	27.58	27.56	27.49	27.53	27.60	27.71	28.43	29.86	32.11	26.36	1.00	1.03	1.09	1.17	0.96
	27.58	27.56	27.49	27.53	27.60	29.35	29.73	31.50	30.45	25.61	1.06	1.08	1.15	1.11	0.93
	27.58	27.56	27.49	27.53	27.60	31.19	30.32	28.48	30.88	26.50	1.13	1.10	1.04	1.12	0.96
	27.58	27.56	27.49	27.53	27.60	27.20	30.01	28.57	30.77	25.98	0.99	1.09	1.04	1.12	0.94
	27.86	27.83	27.76	27.81	27.88	27.28	28.45	29.01	30.68	28.30	0.98	1.02	1.04	1.10	1.02
	27.86	27.83	27.76	27.81	27.88	28.75	31.08	31.70	29.99	25.63	1.03	1.12	1.14	1.08	0.92
	27.86	27.83	27.76	27.81	27.88	28.94	30.97	28.70	31.31	28.29	1.04	1.11	1.03	1.13	1.01
	27.86	27.83	27.76	27.81	27.88	29.29	30.32	30.11	30.16	27.85	1.05	1.09	1.08	1.08	1.00
	27.86	27.83	27.76	27.81	27.88	30.72	29.38	31.85	29.22	26.65	1.10	1.06	1.15	1.05	0.96
Mid	92.87	92.84	92.89	92.91	92.87	96.74	102.13	104.27	103.96	91.75	1.04	1.10	1.12	1.12	0.99
	92.23	92.20	92.25	92.27	92.23	95.40	101.44	96.64	102.73	89.02	1.03	1.10	1.05	1.11	0.97
	92.23	92.20	92.25	92.27	92.23	97.09	102.63	98.80	104.93	90.84	1.05	1.11	1.07	1.14	0.98
	92.23	92.20	92.25	92.27	92.23	98.83	104.87	103.73	105.11	90.95	1.07	1.14	1.12	1.14	0.99
	92.23	92.20	92.25	92.27	92.23	96.78	100.45	99.61	101.80	91.32	1.05	1.09	1.08	1.10	0.99
	91.01	90.99	91.03	91.06	91.01	97.52	102.01	99.30	102.70	90.42	1.07	1.12	1.09	1.13	0.99
	91.01	90.99	91.03	91.06	91.01	97.60	101.78	98.58	102.69	89.65	1.07	1.12	1.08	1.13	0.99
	91.01	90.99	91.03	91.06	91.01	96.32	100.05	94.45	102.48	91.52	1.06	1.10	1.04	1.13	1.01
	91.01	90.99	91.03	91.06	91.01	99.68	105.65	108.04	104.54	93.53	1.10	1.16	1.19	1.15	1.03
High	248.93	248.78	248.14	248.53	249.08	266.66	279.51	264.46	291.91	248.18	1.07	1.12	1.07	1.17	1.00
	248.93	248.78	248.14	248.53	249.08	262.46	277.26	264.40	278.69	243.97	1.05	1.11	1.07	1.12	0.98
	248.93	248.78	248.14	248.53	249.08	273.43	286.62	273.00	292.01	252.36	1.10	1.15	1.10	1.17	1.01
	248.93	248.78	248.14	248.53	249.08	271.94	289.75	282.36	292.30	252.26	1.09	1.16	1.14	1.18	1.01
	245.73	245.58	244.95	245.34	245.88	275.05	290.57	289.08	293.00	252.08	1.12	1.18	1.18	1.19	1.03
	245.73	245.58	244.95	245.34	245.88	266.92	280.31	275.81	282.73	243.49	1.09	1.14	1.13	1.15	0.99
	245.73	245.58	244.95	245.34	245.88	260.84	272.15	271.73	273.55	236.20	1.06	1.11	1.11	1.11	0.96
	245.73	245.58	244.95	245.34	245.88	267.62	282.02	273.88	288.64	245.60	1.09	1.15	1.12	1.18	1.00
	247.62	247.47	246.83	247.22	247.77	267.36	277.35	266.38	287.20	245.43	1.08	1.12	1.08	1.16	0.99
High Ambient	107.85	107.79	107.51	107.68	107.92	109.73	119.63	114.98	128.64	102.22	1.02	1.11	1.07	1.19	0.95
	108.11	108.05	107.76	107.94	108.18	118.75	124.52	122.78	131.76	109.87	1.10	1.15	1.14	1.22	1.02
	108.11	108.05	107.76	107.94	108.18	114.50	125.23	116.98	127.72	107.74	1.06	1.16	1.09	1.18	1.00
	110.53	110.46	110.17	110.35	110.59	116.27	124.89	121.82	123.96	106.72	1.05	1.13	1.11	1.12	0.96
	110.53	110.46	110.17	110.35	110.59	117.46	127.80	123.13	126.67	108.88	1.06	1.16	1.12	1.15	0.98
									Flue Gas	**AVE**	**1.06**	**1.11**	**1.09**	**1.13**	**0.98**
										STDEV	**0.04**	**0.04**	**0.04**	**0.03**	**0.03**
										%RSD	**3.36**	**3.61**	**4.00**	**2.93**	**2.91**
									Ambient Air	**AVE**	**1.06**	**1.14**	**1.10**	**1.17**	**0.98**
										STDEV	**0.03**	**0.02**	**0.03**	**0.04**	**0.03**
										%RSD	**2.73**	**1.85**	**2.47**	**3.28**	**2.71**

Table 3. Xact Concentrations, QAG Concentrations and Xact-to-QAG Ratios

Conc. Level	QAG Aerosol Conc (ng/m^3)					Background Corrected Xact Conc. (ng/m^3)					Xact/QAG				
	Cr	As	Cd	Hg	Pb	Cr	As	Cd	Hg	Pb	Cr	As	Cd	Hg	Pb
Blank Spike	0	0	0	0	0	0	0.4	1.5	23.1	0.26	NA	NA	NA	NA	NA
	0	0	0	0	0	0	0	0.88	21.31	0.8	NA	NA	NA	NA	NA
	0	0	0	0	0	0	0.33	1.42	14.28	0	NA	NA	NA	NA	NA
	0	0	0	0	0	0	0	0	10.64	0.66	NA	NA	NA	NA	NA
	0	0	0	0	0	0	0.49	0	8.85	0.12	NA	NA	NA	NA	NA
	0	0	0	0	0	0	0.23	0	7.41	0.12	NA	NA	NA	NA	NA
	0	0	0	0	0	0	0.43	1.08	6.28	0.43	NA	NA	NA	NA	NA
Low	27.58	27.56	27.49	27.53	27.60	29.96	28.21	28.94	31.30	26.17	1.09	1.02	1.05	1.14	0.95
	27.58	27.56	27.49	27.53	27.60	27.71	28.43	29.86	32.11	26.36	1.00	1.03	1.09	1.17	0.96
	27.58	27.56	27.49	27.53	27.60	29.35	29.73	31.50	30.45	25.61	1.06	1.08	1.15	1.11	0.93
	27.58	27.56	27.49	27.53	27.60	31.19	30.32	28.48	30.88	26.50	1.13	1.10	1.04	1.12	0.96
	27.58	27.56	27.49	27.53	27.60	27.20	30.01	28.57	30.77	25.98	0.99	1.09	1.04	1.12	0.94
	27.86	27.83	27.76	27.81	27.88	27.28	28.45	29.01	30.68	28.30	0.98	1.02	1.04	1.10	1.02
	27.86	27.83	27.76	27.81	27.88	28.75	31.08	31.70	29.99	25.63	1.03	1.12	1.14	1.08	0.92
	27.86	27.83	27.76	27.81	27.88	28.94	30.97	28.70	31.31	28.29	1.04	1.11	1.03	1.13	1.01
	27.86	27.83	27.76	27.81	27.88	29.29	30.32	30.11	30.16	27.85	1.05	1.09	1.08	1.08	1.00
	27.86	27.83	27.76	27.81	27.88	30.72	29.38	31.85	29.22	26.65	1.10	1.06	1.15	1.05	0.96
Mid	92.87	92.84	92.89	92.91	92.87	96.74	102.13	104.27	103.96	91.75	1.04	1.10	1.12	1.12	0.99
	92.23	92.20	92.25	92.27	92.23	95.40	101.44	96.64	102.73	89.02	1.03	1.10	1.05	1.11	0.97
	92.23	92.20	92.25	92.27	92.23	97.09	102.63	98.80	104.93	90.84	1.05	1.11	1.07	1.14	0.98
	92.23	92.20	92.25	92.27	92.23	98.83	104.87	103.73	105.11	90.95	1.07	1.14	1.12	1.14	0.99
	92.23	92.20	92.25	92.27	92.23	96.78	100.45	99.61	101.80	91.32	1.05	1.09	1.08	1.10	0.99
	91.01	90.99	91.03	91.06	91.01	97.52	102.01	99.30	102.70	90.42	1.07	1.12	1.09	1.13	0.99
	91.01	90.99	91.03	91.06	91.01	97.60	101.78	98.58	102.69	89.65	1.07	1.12	1.08	1.13	0.99
	91.01	90.99	91.03	91.06	91.01	96.32	100.05	94.45	102.48	91.52	1.06	1.10	1.04	1.13	1.01
	91.01	90.99	91.03	91.06	91.01	99.68	105.65	108.04	104.54	93.53	1.10	1.16	1.19	1.15	1.03
High	248.93	248.78	248.14	248.53	249.08	266.66	279.51	264.46	291.91	248.18	1.07	1.12	1.07	1.17	1.00
	248.93	248.78	248.14	248.53	249.08	262.46	277.26	264.40	278.69	243.97	1.05	1.11	1.07	1.12	0.98
	248.93	248.78	248.14	248.53	249.08	273.43	286.62	273.00	292.01	252.36	1.10	1.15	1.10	1.17	1.01
	248.93	248.78	248.14	248.53	249.08	271.94	289.75	282.36	292.30	252.26	1.09	1.16	1.14	1.18	1.01
	245.73	245.58	244.95	245.34	245.88	275.05	290.57	289.08	293.00	252.08	1.12	1.18	1.18	1.19	1.03
	245.73	245.58	244.95	245.34	245.88	266.92	280.31	275.81	282.73	243.49	1.09	1.14	1.13	1.15	0.99
	245.73	245.58	244.95	245.34	245.88	260.84	272.15	271.73	273.55	236.20	1.06	1.11	1.11	1.11	0.96
	245.73	245.58	244.95	245.34	245.88	267.62	282.02	273.88	288.64	245.60	1.09	1.15	1.12	1.18	1.00
	247.62	247.47	246.83	247.22	247.77	267.36	277.35	266.38	287.20	245.43	1.08	1.12	1.08	1.16	0.99
High Ambient	107.85	107.79	107.51	107.68	107.92	109.73	119.63	114.98	128.64	102.22	1.02	1.11	1.07	1.19	0.95
	108.11	108.05	107.76	107.94	108.18	118.75	124.52	122.78	131.76	109.87	1.10	1.15	1.14	1.22	1.02
	108.11	108.05	107.76	107.94	108.18	114.50	125.23	116.98	127.72	107.74	1.06	1.16	1.09	1.18	1.00
	110.53	110.46	110.17	110.35	110.59	116.27	124.89	121.82	123.96	106.72	1.05	1.13	1.11	1.12	0.96
	110.53	110.46	110.17	110.35	110.59	117.46	127.80	123.13	126.67	108.88	1.06	1.16	1.12	1.15	0.98
									Flue Gas	**AVE**	**1.06**	**1.11**	**1.09**	**1.13**	**0.98**
										STDEV	**0.04**	**0.04**	**0.04**	**0.03**	**0.03**
										%RSD	**3.36**	**3.61**	**4.00**	**2.93**	**2.91**
									Ambient Air	**AVE**	**1.06**	**1.14**	**1.10**	**1.17**	**0.98**
										STDEV	**0.03**	**0.02**	**0.03**	**0.04**	**0.03**
										%RSD	**2.73**	**1.85**	**2.47**	**3.28**	**2.71**

Table 4. Summary of Xact-to-QAG Agreement Criteria and Results

Element	Xact/QAG Ratio		
	Criteria	Experimental Average	Criteria Met?
Cr	0.80 to 1.20	1.06	yes
As	0.80 to 1.20	1.11	yes
Cd	0.80 to 1.20	1.09	yes
Hg	0.80 to 1.20	1.13	yes
Pb	0.80 to 1.20	0.98	yes

On average, the Xact was slightly high relative to the QAG, ranging from a low of 0.98 for lead to 1.13 for mercury. However, all values were within the experimental target range between 0.80 and 1.20. Also shown in Table 3, Xact-to-QAG ratios are not significantly different regardless of whether the Xact was sampling spiked stack effluent or spiked ambient air. These two results indicate that the Xact's measurement of all five metals of interest (chromium, arsenic, cadmium, mercury, and lead) is unaffected by the chemical composition of the stack gas.

A major difficulty with this experiment was the measurement of the amount of water in the system. The Xact measures metals concentrations on a dry basis, however, the QAG spikes into a very "wet" air stream. During testing, it appears that CES had a great deal of difficulty accurately measuring the amount of water in the system. Since sampling took place downstream of a wet scrubber, all of the results assume saturation at a measured temperature of 116 °F and an absolute pressure of approximately 27.9 inches of mercury (see appendix A for a more detailed explanation).[15] The amount of water determined to be present during ambient air spiking was based on nearby meteorological data of the relative humidity.

As noted above, background metal concentrations were determined using the Xact. A background level of 6.73 µg/dscm was used for mercury throughout the tests and represents the average of all background measurements on the Xact. The mercury is likely due to the coal and was expected. For the lowest spike level, a background concentration of 4 µg/dscm of chromium was subtracted from the Xact results. During most of the blank spike and the background measurements, CES had observed essentially no background metal concentrations for every element of interest except mercury. However, just prior to the low-level spike, CES observed a jump in the concentration of several metals of interest including chromium (12 µg/dscm) and arsenic (20 µg/dscm). This observed spike coincided with a sudden failure in the automatic feed of coal. Spiking was not resumed until the arsenic, lead and cadmium values had returned to zero; however, the chromium numbers did not return to zero. The value of 4 µg/dscm for chromium was therefore used as an estimate and is slightly lower than the last measured value for chromium of 4.73 µg/dscm.

4.2 Inter-elemental Agreement

Table 5 shows the ratio of all the elements to cadmium under all four spiking conditions (low concentration with stack gas, medium concentration with stack gas, high concentration with stack gas, high concentration with ambient air). Of these five elements, chromium, lead and cadmium are likely to exist in a particle phase, arsenic is likely to be partially in the particle

Table 4. Summary of Xact-to-QAG Agreement Criteria and Results

Element	Xact/QAG Ratio		
	Criteria	Experimental Average	Criteria Met?
Cr	0.80 to 1.20	1.06	yes
As	0.80 to 1.20	1.11	yes
Cd	0.80 to 1.20	1.09	yes
Hg	0.80 to 1.20	1.13	yes
Pb	0.80 to 1.20	0.98	yes

On average, the Xact was slightly high relative to the QAG, ranging from a low of 0.98 for lead to 1.13 for mercury. However, all values were within the experimental target range between 0.80 and 1.20. Also shown in Table 3, Xact-to-QAG ratios are not significantly different regardless of whether the Xact was sampling spiked stack effluent or spiked ambient air. These two results indicate that the Xact's measurement of all five metals of interest (chromium, arsenic, cadmium, mercury, and lead) is unaffected by the chemical composition of the stack gas.

A major difficulty with this experiment was the measurement of the amount of water in the system. The Xact measures metals concentrations on a dry basis, however, the QAG spikes into a very "wet" air stream. During testing, it appears that CES had a great deal of difficulty accurately measuring the amount of water in the system. Since sampling took place downstream of a wet scrubber, all of the results assume saturation at a measured temperature of 116 °F and an absolute pressure of approximately 27.9 inches of mercury (see appendix A for a more detailed explanation).[15] The amount of water determined to be present during ambient air spiking was based on nearby meteorological data of the relative humidity.

As noted above, background metal concentrations were determined using the Xact. A background level of 6.73 µg/dscm was used for mercury throughout the tests and represents the average of all background measurements on the Xact. The mercury is likely due to the coal and was expected. For the lowest spike level, a background concentration of 4 µg/dscm of chromium was subtracted from the Xact results. During most of the blank spike and the background measurements, CES had observed essentially no background metal concentrations for every element of interest except mercury. However, just prior to the low-level spike, CES observed a jump in the concentration of several metals of interest including chromium (12 µg/dscm) and arsenic (20 µg/dscm). This observed spike coincided with a sudden failure in the automatic feed of coal. Spiking was not resumed until the arsenic, lead and cadmium values had returned to zero; however, the chromium numbers did not return to zero. The value of 4 µg/dscm for chromium was therefore used as an estimate and is slightly lower than the last measured value for chromium of 4.73 µg/dscm.

4.2 Inter-elemental Agreement

Table 5 shows the ratio of all the elements to cadmium under all four spiking conditions (low concentration with stack gas, medium concentration with stack gas, high concentration with stack gas, high concentration with ambient air). Of these five elements, chromium, lead and cadmium are likely to exist in a particle phase, arsenic is likely to be partially in the particle

phase and partially in vapor phase, and mercury is likely to be entirely in the vapor phase. The inter-elemental ratios serve as an additional confirmation that the Xact's measurement is unaffected by stack gas composition. If the measurements made by the Xact were significantly impacted by the chemical composition of the stack gas, one would expect a difference in the inter-elemental ratios between spiked stack gas and spiked ambient air, particularly for the metals likely to have significant vapor phase species (arsenic and mercury). The results in Table 5 indicate that the inter-elemental ratios are not significantly different for spiked stack gas or spiked ambient air. Furthermore, the fact that the inter-elemental ratios remain nearly the same across all concentration levels indicates that the chemistry and physical characteristics of the stack effluent do not affect the Xact's measurements at any concentration.

phase and partially in vapor phase, and mercury is likely to be entirely in the vapor phase. The inter-elemental ratios serve as an additional confirmation that the Xact's measurement is unaffected by stack gas composition. If the measurements made by the Xact were significantly impacted by the chemical composition of the stack gas, one would expect a difference in the inter-elemental ratios between spiked stack gas and spiked ambient air, particularly for the metals likely to have significant vapor phase species (arsenic and mercury). The results in Table 5 indicate that the inter-elemental ratios are not significantly different for spiked stack gas or spiked ambient air. Furthermore, the fact that the inter-elemental ratios remain nearly the same across all concentration levels indicates that the chemistry and physical characteristics of the stack effluent do not affect the Xact's measurements at any concentration.

Table 5. Xact Inter-elemental Ratios

Concentration Level	Run Number	Interelemental Ratios			
		Cr/Cd	As/Cd	Hg/Cd	Pb/Cd
Low Stack Gas	1	1.04	0.97	1.15	0.90
	2	0.93	0.95	1.14	0.88
	3	0.93	0.94	1.03	0.81
	4	1.10	1.06	1.15	0.93
	5	0.95	1.05	1.14	0.91
	6	0.94	0.98	1.12	0.98
	7	0.91	0.98	1.01	0.81
	8	1.01	1.08	1.16	0.99
	9	0.97	1.01	1.07	0.92
	10	0.96	0.92	0.98	0.84
	Average	**0.97**	**1.00**	**1.09**	**0.90**
	STDEV	**0.06**	**0.06**	**0.07**	**0.07**
	%RSD	**5.80**	**5.64**	**6.38**	**7.35**
Mid Stack Gas	1	0.98	1.05	1.06	0.91
	2	0.95	1.03	1.05	0.91
	3	0.93	0.98	1.02	0.88
	4	0.99	1.05	1.08	0.92
	5	0.98	1.04	1.08	0.92
	6	0.95	1.01	1.03	0.88
	7	0.97	1.01	1.04	0.92
	8	0.98	1.03	1.05	0.91
	9	0.99	1.03	1.06	0.91
	10	1.02	1.06	1.11	0.97
	11	0.92	0.98	0.99	0.87
	Average	**0.97**	**1.02**	**1.05**	**0.91**
	STDEV	**0.03**	**0.03**	**0.03**	**0.03**
	%RSD	**2.94**	**2.66**	**3.17**	**3.05**
High Stack Gas	1	0.97	1.02	1.06	0.89
	2	1.01	1.06	1.11	0.94
	3	0.99	1.05	1.06	0.92
	4	1.00	1.05	1.08	0.92
	5	0.96	1.03	1.04	0.89
	6	0.95	1.01	1.02	0.87
	7	0.97	1.02	1.03	0.88
	8	0.96	1.00	1.01	0.87
	9	0.98	1.03	1.06	0.90
	10	1.00	1.04	1.09	0.92
	Average	**0.98**	**1.03**	**1.06**	**0.90**
	STDEV	**0.02**	**0.02**	**0.03**	**0.02**
	%RSD	**2.09**	**1.88**	**2.86**	**2.65**
High Ambient Air	2	0.97	1.01	1.05	0.89
	3	0.98	1.07	1.07	0.92
	4	0.95	1.03	0.99	0.88
	5	0.95	1.04	1.00	0.88
	Average	**0.96**	**1.04**	**1.03**	**0.89**
	STDEV	**0.01**	**0.02**	**0.03**	**0.02**
	%RSD	**1.23**	**2.35**	**3.40**	**2.19**
AVE of Stack Gas Spike		**0.97**	**1.02**	**1.07**	**0.90**
STDEV of Gas Stack Spike		**0.04**	**0.04**	**0.05**	**0.04**
AVE of Ambient Air Spike		**0.96**	**1.04**	**1.03**	**0.89**
STDEV of Ambient Air Spike		**0.01**	**0.02**	**0.03**	**0.02**

Table 5. Xact Inter-elemental Ratios

Concentration Level	Run Number	Interelemental Ratios			
		Cr/Cd	As/Cd	Hg/Cd	Pb/Cd
Low Stack Gas	1	1.04	0.97	1.15	0.90
	2	0.93	0.95	1.14	0.88
	3	0.93	0.94	1.03	0.81
	4	1.10	1.06	1.15	0.93
	5	0.95	1.05	1.14	0.91
	6	0.94	0.98	1.12	0.98
	7	0.91	0.98	1.01	0.81
	8	1.01	1.08	1.16	0.99
	9	0.97	1.01	1.07	0.92
	10	0.96	0.92	0.98	0.84
	Average	**0.97**	**1.00**	**1.09**	**0.90**
	STDEV	**0.06**	**0.06**	**0.07**	**0.07**
	%RSD	**5.80**	**5.64**	**6.38**	**7.35**
Mid Stack Gas	1	0.98	1.05	1.06	0.91
	2	0.95	1.03	1.05	0.91
	3	0.93	0.98	1.02	0.88
	4	0.99	1.05	1.08	0.92
	5	0.98	1.04	1.08	0.92
	6	0.95	1.01	1.03	0.88
	7	0.97	1.01	1.04	0.92
	8	0.98	1.03	1.05	0.91
	9	0.99	1.03	1.06	0.91
	10	1.02	1.06	1.11	0.97
	11	0.92	0.98	0.99	0.87
	Average	**0.97**	**1.02**	**1.05**	**0.91**
	STDEV	**0.03**	**0.03**	**0.03**	**0.03**
	%RSD	**2.94**	**2.66**	**3.17**	**3.05**
High Stack Gas	1	0.97	1.02	1.06	0.89
	2	1.01	1.06	1.11	0.94
	3	0.99	1.05	1.06	0.92
	4	1.00	1.05	1.08	0.92
	5	0.96	1.03	1.04	0.89
	6	0.95	1.01	1.02	0.87
	7	0.97	1.02	1.03	0.88
	8	0.96	1.00	1.01	0.87
	9	0.98	1.03	1.06	0.90
	10	1.00	1.04	1.09	0.92
	Average	**0.98**	**1.03**	**1.06**	**0.90**
	STDEV	**0.02**	**0.02**	**0.03**	**0.02**
	%RSD	**2.09**	**1.88**	**2.86**	**2.65**
High Ambient Air	2	0.97	1.01	1.05	0.89
	3	0.98	1.07	1.07	0.92
	4	0.95	1.03	0.99	0.88
	5	0.95	1.04	1.00	0.88
	Average	**0.96**	**1.04**	**1.03**	**0.89**
	STDEV	**0.01**	**0.02**	**0.03**	**0.02**
	%RSD	**1.23**	**2.35**	**3.40**	**2.19**
AVE of Stack Gas Spike		**0.97**	**1.02**	**1.07**	**0.90**
STDEV of Gas Stack Spike		**0.04**	**0.04**	**0.05**	**0.04**
AVE of Ambient Air Spike		**0.96**	**1.04**	**1.03**	**0.89**
STDEV of Ambient Air Spike		**0.01**	**0.02**	**0.03**	**0.02**

4.3 Linearity

The results of the linear least squares regression analyses for the Xact reported concentration compared to the QAG reference concentrations over the experimental concentration range are shown in Figures 2 through 6. The slope of each least squares fit is an indicator of the accuracy of the Xact with a value of unity indicating complete agreement between the Xact and the QAG. The slopes ranged from a low of 0.99 for lead to a high of 1.14 for arsenic; all elements were thus within the experimental target range for the slope of 0.85 to 1.15. The correlation coefficient (*r*) indicates the amount of scatter in the data with a value of 1 indicating no scatter. The correlation coefficient for all of the elements had values of 0.99, indicating very little scatter and much higher than the experimental target of 0.90. Table 6 summaries the results with regards to the linearity criteria established in Section 2.3. Together, the slope and correlation coefficient values demonstrate that the Xact can accurately take measurements over a concentration range that includes existing source emission limits (92 µg/dscm for As and Cr, 230 µg/dscm for Pb, Cd, and 130 µg/dscm for Hg).[4]

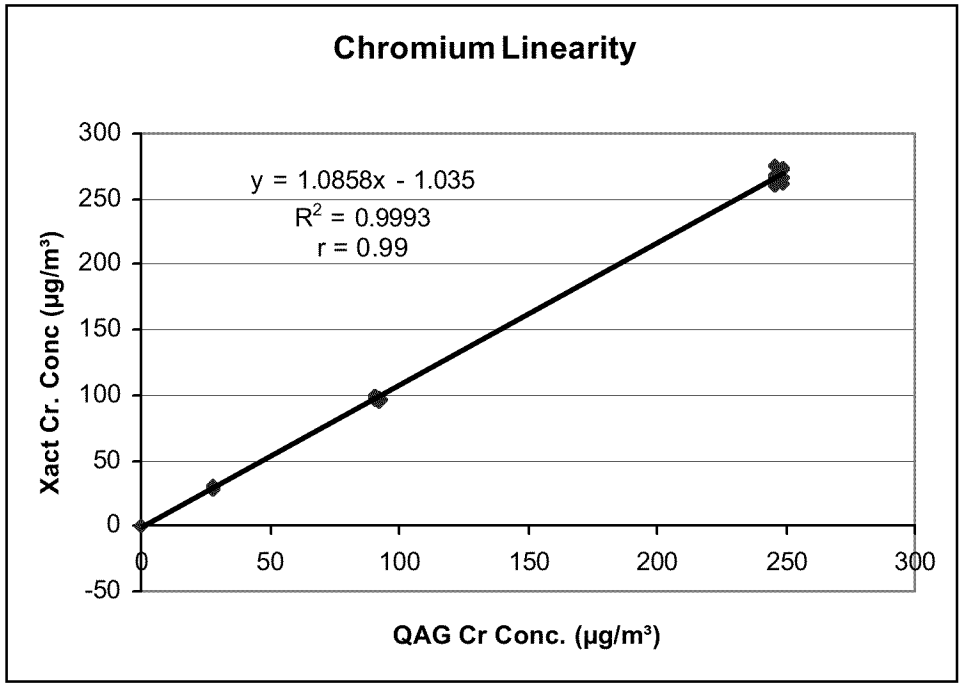

Figure 2. Chromium Linearity

4.3 Linearity

The results of the linear least squares regression analyses for the Xact reported concentration compared to the QAG reference concentrations over the experimental concentration range are shown in Figures 2 through 6. The slope of each least squares fit is an indicator of the accuracy of the Xact with a value of unity indicating complete agreement between the Xact and the QAG. The slopes ranged from a low of 0.99 for lead to a high of 1.14 for arsenic; all elements were thus within the experimental target range for the slope of 0.85 to 1.15. The correlation coefficient (*r*) indicates the amount of scatter in the data with a value of 1 indicating no scatter. The correlation coefficient for all of the elements had values of 0.99, indicating very little scatter and much higher than the experimental target of 0.90. Table 6 summaries the results with regards to the linearity criteria established in Section 2.3. Together, the slope and correlation coefficient values demonstrate that the Xact can accurately take measurements over a concentration range that includes existing source emission limits (92 µg/dscm for As and Cr, 230 µg/dscm for Pb, Cd, and 130 µg/dscm for Hg).[4]

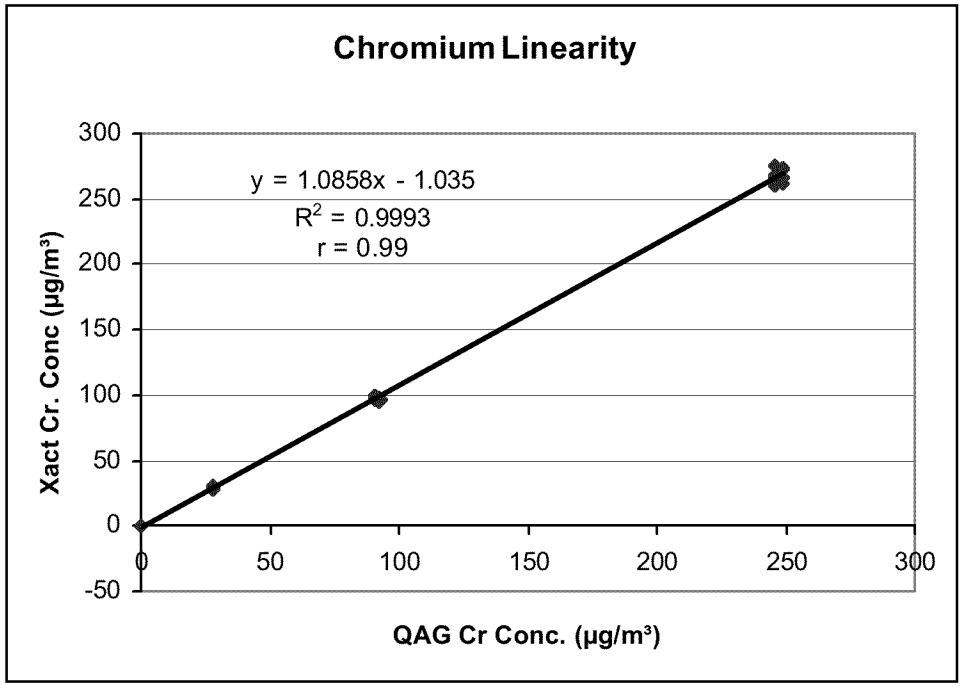

Figure 2. Chromium Linearity

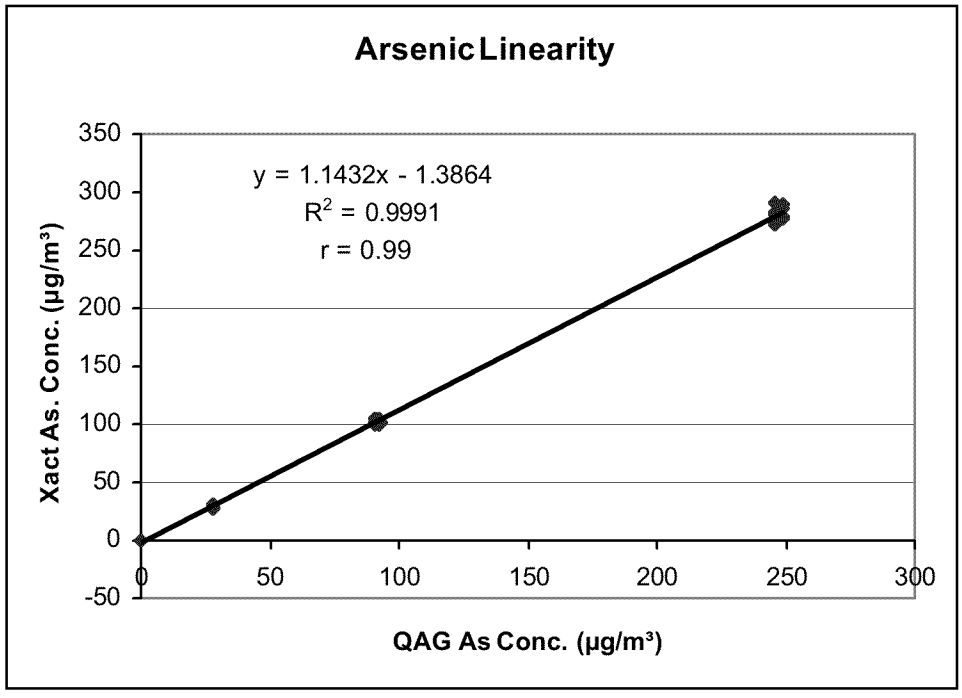

Figure 3. Arsenic Linearity

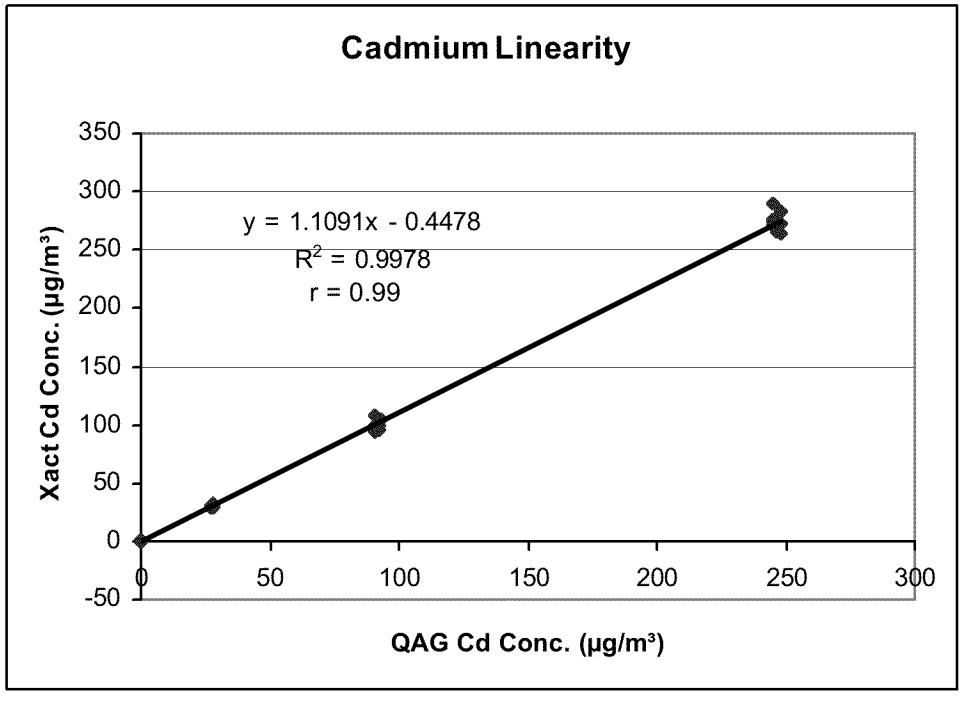

Figure 4. Cadmium Linearity

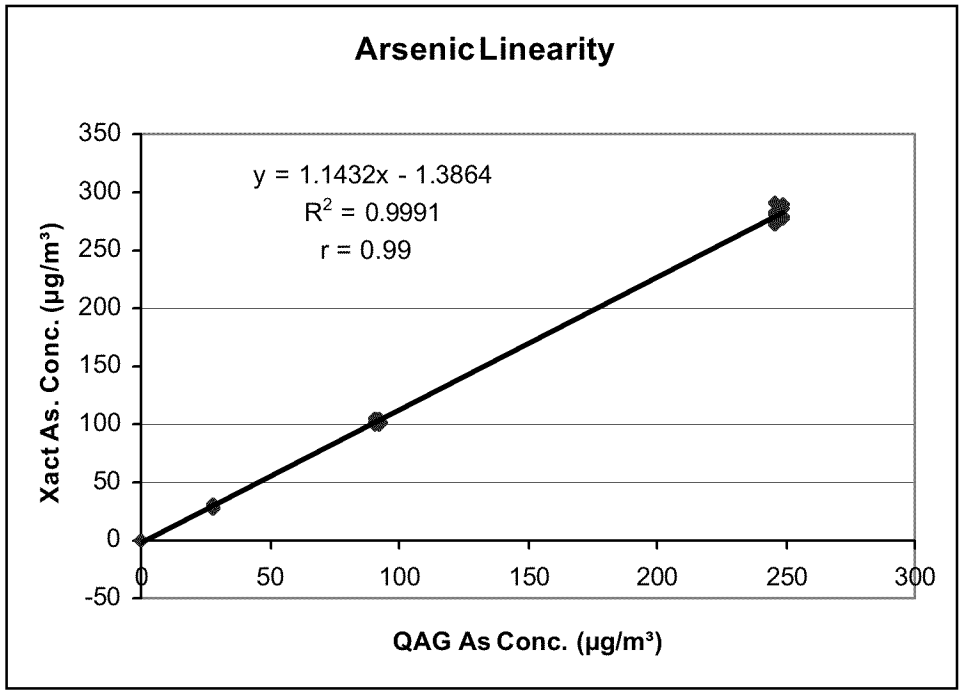

Figure 3. Arsenic Linearity

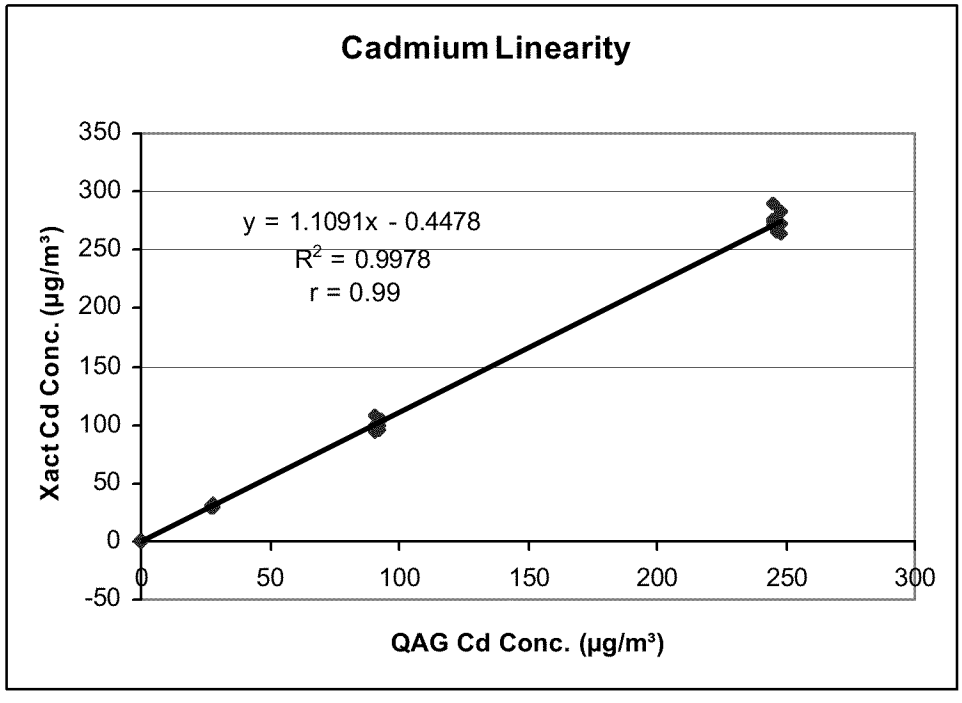

Figure 4. Cadmium Linearity

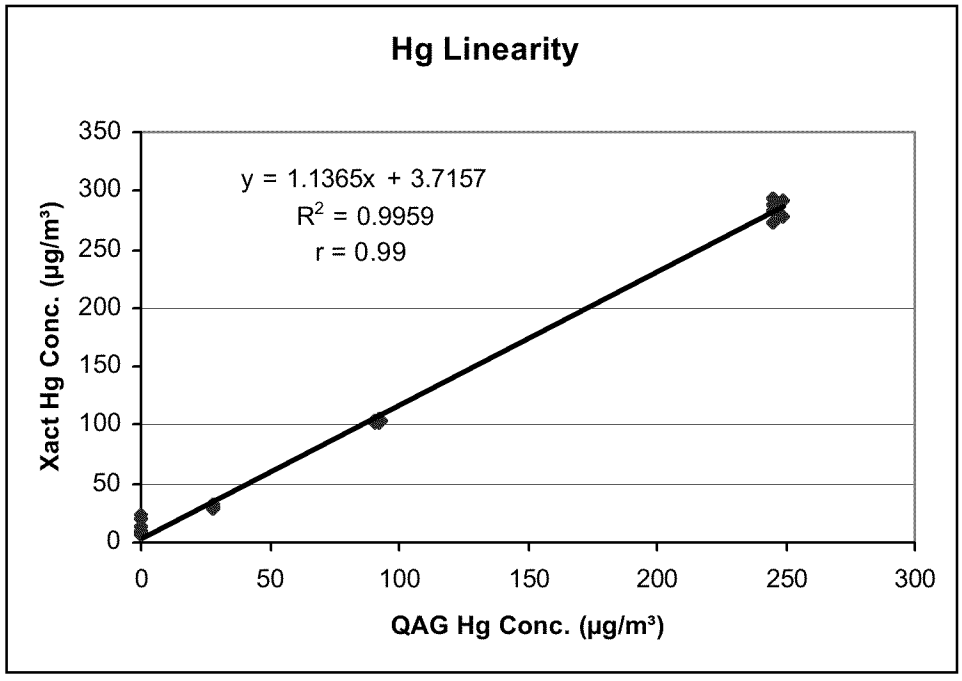

Figure 5. Mercury Linearity

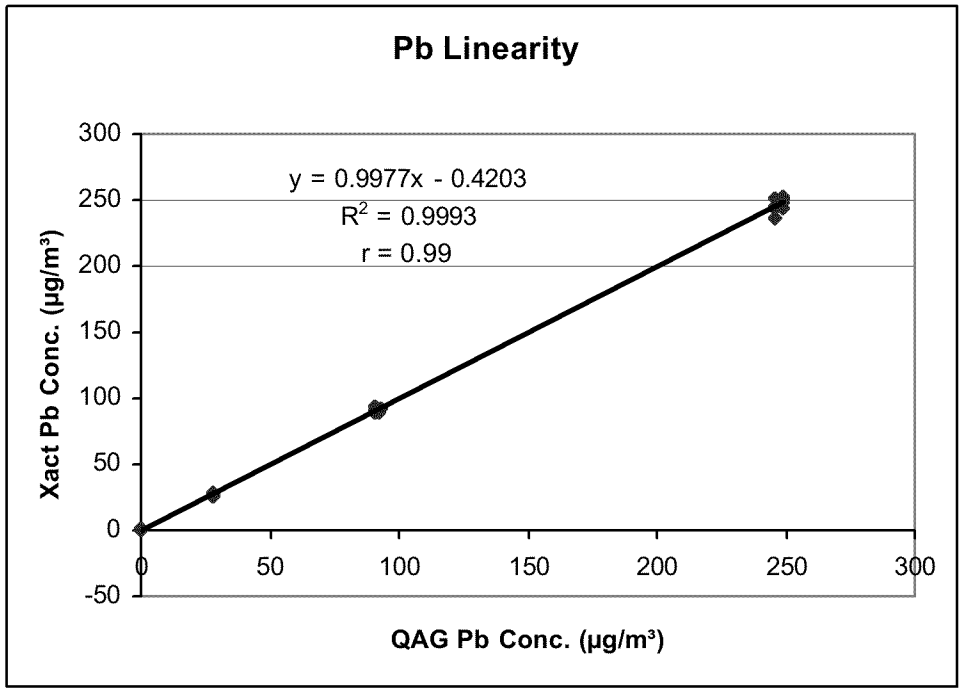

Figure 6. Lead Linearity

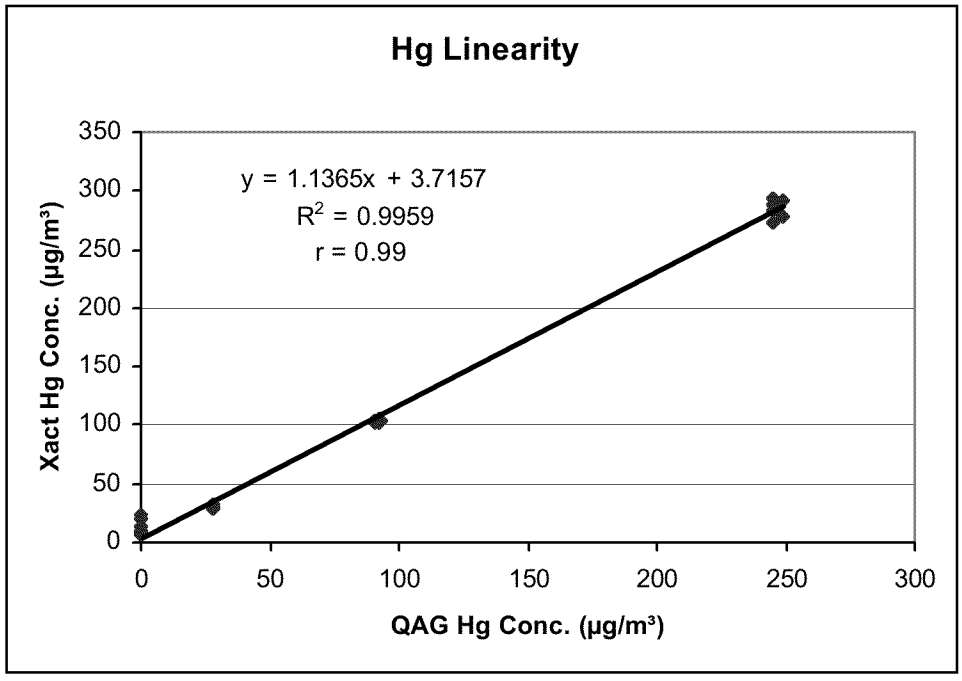

Figure 5. Mercury Linearity

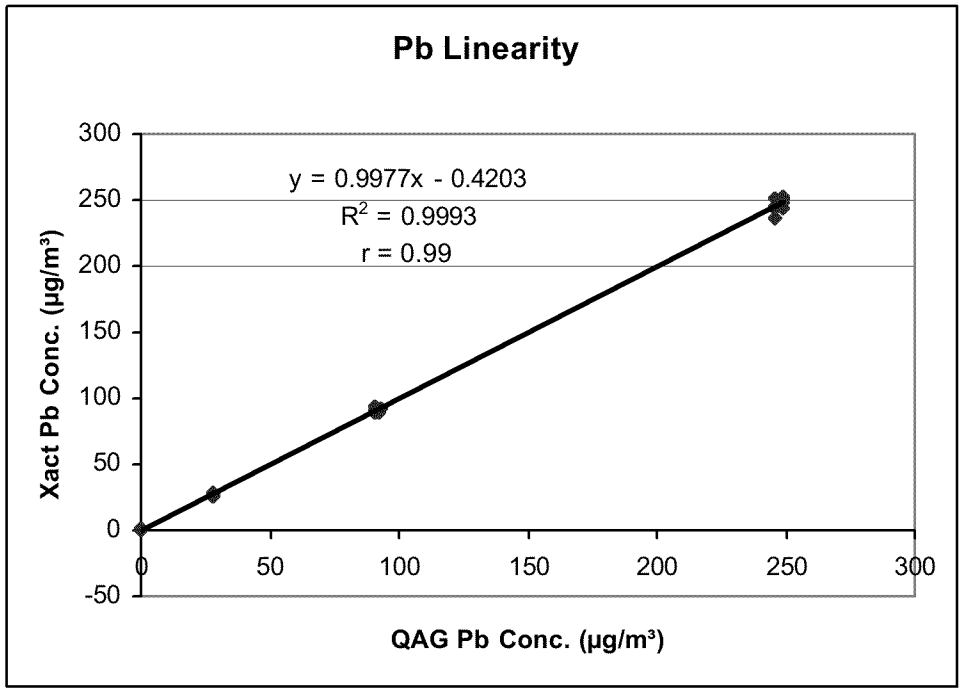

Figure 6. Lead Linearity

Table 6. Summary of Linearity Criteria and Results

Element	Linearity					
	Slope			Correlation Cooefficient		
	Criteria	Experimental Result	Criteria Met?	Criteria	Experimental Average	Criteria Met?
Cr	0.85 to 1.15	1.09	yes	>0.90	>0.99	yes
As	0.85 to 1.15	1.14	yes	>0.90	>0.99	yes
Cd	0.85 to 1.15	1.11	yes	>0.90	>0.99	yes
Hg	0.85 to 1.15	1.14	yes	>0.90	>0.99	yes
Pb	0.85 to 1.15	1.00	yes	>0.90	>0.99	yes

5.0 Experimental Conclusions and Technical Feasibility Assessment

The Phase I feasibility demonstration sought to answer three technical questions regarding the function and validation of the Xact in the more challenging environment of a coal-fired facility.

1. Does the chemistry or physical nature of emissions from coal-fired hazardous waste facilities impact the Xact's ability to continuously and accurately measure metal emissions?

2. Can the Xact accurately measure metal emission levels over a concentration range that includes the emission limit on a coal fired incinerator?

3. Can the techniques used to validate the Xact on a natural gas fired hazardous waste combustion facility be used on a coal burning facility?

To answer the first question, CES evaluated the agreement between Xact-measured concentrations and reference concentrations as well as the elemental agreement between measurements made in stack gas and measurements made in ambient air. The results demonstrated that there was a high level of agreement between the Xact and the reference aerosol at all concentration levels and this level agreement was not affected by sampling stack gas versus ambient air. The results also showed that measurements made in stack gas and measurements made in ambient air were not significantly different for each element. CES therefore concludes that the Xact's measurements are not impacted by the chemical or physical characteristics of the stack gas.

To answer the second question, CES evaluated the linear response and the inter-elemental agreement of the Xact's measurements over a concentration range that included existing source emission limits. The results demonstrated excellent agreement between the reference QAG concentrations and the Xact measured concentration at all spiking levels, as well as good elemental agreement across all spiking levels. CES thus concludes that the Xact can accurately measure metals concentrations over a large range including the emission limit.

Because the results of this experiment indicate that the Xact is not impacted by the chemical composition of coal-fired incinerator's emissions and the instrument can take accurate measurements over a concentration range that includes the emission limit, CES concludes that it

Table 6. Summary of Linearity Criteria and Results

Element	Linearity					
	Slope			Correlation Cooefficient		
	Criteria	Experimental Result	Criteria Met?	Criteria	Experimental Average	Criteria Met?
Cr	0.85 to 1.15	1.09	yes	>0.90	>0.99	yes
As	0.85 to 1.15	1.14	yes	>0.90	>0.99	yes
Cd	0.85 to 1.15	1.11	yes	>0.90	>0.99	yes
Hg	0.85 to 1.15	1.14	yes	>0.90	>0.99	yes
Pb	0.85 to 1.15	1.00	yes	>0.90	>0.99	yes

5.0 Experimental Conclusions and Technical Feasibility Assessment

The Phase I feasibility demonstration sought to answer three technical questions regarding the function and validation of the Xact in the more challenging environment of a coal-fired facility.

1. Does the chemistry or physical nature of emissions from coal-fired hazardous waste facilities impact the Xact's ability to continuously and accurately measure metal emissions?

2. Can the Xact accurately measure metal emission levels over a concentration range that includes the emission limit on a coal fired incinerator?

3. Can the techniques used to validate the Xact on a natural gas fired hazardous waste combustion facility be used on a coal burning facility?

To answer the first question, CES evaluated the agreement between Xact-measured concentrations and reference concentrations as well as the elemental agreement between measurements made in stack gas and measurements made in ambient air. The results demonstrated that there was a high level of agreement between the Xact and the reference aerosol at all concentration levels and this level agreement was not affected by sampling stack gas versus ambient air. The results also showed that measurements made in stack gas and measurements made in ambient air were not significantly different for each element. CES therefore concludes that the Xact's measurements are not impacted by the chemical or physical characteristics of the stack gas.

To answer the second question, CES evaluated the linear response and the inter-elemental agreement of the Xact's measurements over a concentration range that included existing source emission limits. The results demonstrated excellent agreement between the reference QAG concentrations and the Xact measured concentration at all spiking levels, as well as good elemental agreement across all spiking levels. CES thus concludes that the Xact can accurately measure metals concentrations over a large range including the emission limit.

Because the results of this experiment indicate that the Xact is not impacted by the chemical composition of coal-fired incinerator's emissions and the instrument can take accurate measurements over a concentration range that includes the emission limit, CES concludes that it

is feasible to use the Xact CEMS for measuring metals at any coal-fired combustion source including: hazardous waste incinerators, municipal waste incinerators, medical waste incinerators, and coal-fired power plants. Furthermore, the validation techniques used previously on a gas-fired hazardous waste incinerator were also successful on a coal-fired furnace. Future work however, should incorporate more accurate methods of measuring stack gas water content should be used.

6.0 Commercialization Activities and Plans

An investigation of potential markets for the Xact multi-metals monitor during Phase I of this project has revealed several markets for this instrument: the mercury monitoring market, the multi-metal CEMs market, and the multi-metal ambient monitoring market. At the time of this study, the most significant market for the Xact CEMS is the mercury monitoring market. The mercury monitoring market, estimated at $100 million dollar a year (all goods and services), was created in 2005 with the Clean Air Mercury Rule .[16] This rule requires monitoring of mercury emissions from coal-fired utility boilers. While other technologies exist in this market, the Xact technology is unique in that it uses X-ray fluorescence to measure mercury and thus offers significant benefits over the other technologies including measurement of more than one metal and reduced cost.

Presently, the multi-metals CEMS and ambient monitoring markets are still emerging. CES continues to pursue possible commercial opportunities in the multi-metals CEMS market as emission monitors and standards are reviewed by the US and Europe. During 2007, CES received and filled orders for two Xact CEMS for the US Army. CES was also approached several times throughout the year by parties potentially interested in purchasing units. In terms of the multi-metal ambient monitoring market, CES has been contacted by foreign and state governments interested in the application of Xact technology ambient monitoring. This market should continue to expand as National Ambient Air Quality Standards for lead are review by the EPA. In fact, CES has recently received two orders for ambient multi-metals monitors and is expecting a third order in October. At this time, however, there are no regulatory drivers for a multi-metal CEMs or ambient monitors.

Given the strength and significance of the mercury monitoring market, CES has elected to focus the majority of its commercialization efforts on this market. CES is beginning to optimize the Xact design around mercury monitoring while maintaining those features that make the instrument applicable to the multi-metals CEMs and ambient monitoring markets as they develop. A sustainable commercial business is expected with application of Xact technology to the existing mercury market alone. However, this technology will also be applied to additional monitoring markets as they are defined by future regulations.

Progress and our future commercialization activities in this monitoring market are summarized below.

1. *Optimization of our Xact for the measurement of mercury.* The multi-metals Xact used in these Phase I demonstration tests had a single excitation condition optimized for mercury

is feasible to use the Xact CEMS for measuring metals at any coal-fired combustion source including: hazardous waste incinerators, municipal waste incinerators, medical waste incinerators, and coal-fired power plants. Furthermore, the validation techniques used previously on a gas-fired hazardous waste incinerator were also successful on a coal-fired furnace. Future work however, should incorporate more accurate methods of measuring stack gas water content should be used.

6.0 Commercialization Activities and Plans

An investigation of potential markets for the Xact multi-metals monitor during Phase I of this project has revealed several markets for this instrument: the mercury monitoring market, the multi-metal CEMs market, and the multi-metal ambient monitoring market. At the time of this study, the most significant market for the Xact CEMS is the mercury monitoring market. The mercury monitoring market, estimated at $100 million dollar a year (all goods and services), was created in 2005 with the Clean Air Mercury Rule .[16] This rule requires monitoring of mercury emissions from coal-fired utility boilers. While other technologies exist in this market, the Xact technology is unique in that it uses X-ray fluorescence to measure mercury and thus offers significant benefits over the other technologies including measurement of more than one metal and reduced cost.

Presently, the multi-metals CEMS and ambient monitoring markets are still emerging. CES continues to pursue possible commercial opportunities in the multi-metals CEMS market as emission monitors and standards are reviewed by the US and Europe. During 2007, CES received and filled orders for two Xact CEMS for the US Army. CES was also approached several times throughout the year by parties potentially interested in purchasing units. In terms of the multi-metal ambient monitoring market, CES has been contacted by foreign and state governments interested in the application of Xact technology ambient monitoring. This market should continue to expand as National Ambient Air Quality Standards for lead are review by the EPA. In fact, CES has recently received two orders for ambient multi-metals monitors and is expecting a third order in October. At this time, however, there are no regulatory drivers for a multi-metal CEMs or ambient monitors.

Given the strength and significance of the mercury monitoring market, CES has elected to focus the majority of its commercialization efforts on this market. CES is beginning to optimize the Xact design around mercury monitoring while maintaining those features that make the instrument applicable to the multi-metals CEMs and ambient monitoring markets as they develop. A sustainable commercial business is expected with application of Xact technology to the existing mercury market alone. However, this technology will also be applied to additional monitoring markets as they are defined by future regulations.

Progress and our future commercialization activities in this monitoring market are summarized below.

1. *Optimization of our Xact for the measurement of mercury.* The multi-metals Xact used in these Phase I demonstration tests had a single excitation condition optimized for mercury

but used a detector optimized for multi-metals. Future work will focus on optimization of X-ray optics and use of detectors best suited for mercury. Currently, CES is working with a detector supplier who has loaned CES an optimum mercury detector. This detector is in the early stages of evaluation and testing.

2. *Establishing opportunities to demonstrate the Xact technology on coal-fired utility boilers.* CES has obtained permission from a local coal-fired power plant to test a mercury-optimized monitor on their stack. With funding, CES plans on installing a mercury-optimized Xact at the local coal-fired power plant and operating it over an extended period to demonstrate its reliability. If funding is available, this unit would also be tested for accuracy with a comparative reference method. CES expects to obtain a commitment to fund reference method testing of the mercury-optimized Xact when the instrument is installed on the stack.

3. *Strengthening patent protection.* During this past year, CES has obtained a third patent dealing with proprietary filter chemistry. CES submitted two other patent applications this past year dealing with quality assurance anticipates submitting an additional patent in 2008.

4. *Defining and streamlining the Xact production supply chain and cost reduction.* In 2007, CES built two new multi-metal Xacts for a US Army conventional weapons incineration application. This opportunity allowed CES to define its supply chain along with a clearly defined database on costs, vendor, lead times, etc. As a result, CES was also able to more precisely define fabrication costs and identify areas for cost reduction.

5. *Demonstrating the application of the Xact to the ambient air monitoring market.* With current EPA funding, CES is in the process of demonstrating the applicability of the Xact technology to fence line monitoring. With potential future funding, CES expects to have a unit operating in the field near a major source in Portland.

6. *Development of an expanding distribution network.* This past year, CES has successfully established distribution networks in Korea, Canada and Australia. This distribution network has resulted in two purchase orders for ambient multi-metal Xacts from a Korean distributor and strong leads from a Canadian and Australian distributor. In addition, CES is in the process of expanding the sales territory of our Korean distributor to the major pacific rim countries as well as developing distributor relations for Europe and India.

7. *Developing sales literature.* This literature will help support sales and distribution efforts. In addition, CES attendance at seminars will help distributors and regulators better understand the Xact technology and its broad applications.

8. *Looking for partners to help address the mercury monitoring market.* Discussions with sources of capital are in progress that might provide supplemental resources to more aggressively attack the mercury monitoring market. In addition, CES is currently in discussions with integrators to help service the mercury CEMS market and with key component suppliers to provide support. These discussions have already resulted in labor

but used a detector optimized for multi-metals. Future work will focus on optimization of X-ray optics and use of detectors best suited for mercury. Currently, CES is working with a detector supplier who has loaned CES an optimum mercury detector. This detector is in the early stages of evaluation and testing.

2. *Establishing opportunities to demonstrate the Xact technology on coal-fired utility boilers.* CES has obtained permission from a local coal-fired power plant to test a mercury-optimized monitor on their stack. With funding, CES plans on installing a mercury-optimized Xact at the local coal-fired power plant and operating it over an extended period to demonstrate its reliability. If funding is available, this unit would also be tested for accuracy with a comparative reference method. CES expects to obtain a commitment to fund reference method testing of the mercury-optimized Xact when the instrument is installed on the stack.

3. *Strengthening patent protection.* During this past year, CES has obtained a third patent dealing with proprietary filter chemistry. CES submitted two other patent applications this past year dealing with quality assurance anticipates submitting an additional patent in 2008.

4. *Defining and streamlining the Xact production supply chain and cost reduction.* In 2007, CES built two new multi-metal Xacts for a US Army conventional weapons incineration application. This opportunity allowed CES to define its supply chain along with a clearly defined database on costs, vendor, lead times, etc. As a result, CES was also able to more precisely define fabrication costs and identify areas for cost reduction.

5. *Demonstrating the application of the Xact to the ambient air monitoring market.* With current EPA funding, CES is in the process of demonstrating the applicability of the Xact technology to fence line monitoring. With potential future funding, CES expects to have a unit operating in the field near a major source in Portland.

6. *Development of an expanding distribution network.* This past year, CES has successfully established distribution networks in Korea, Canada and Australia. This distribution network has resulted in two purchase orders for ambient multi-metal Xacts from a Korean distributor and strong leads from a Canadian and Australian distributor. In addition, CES is in the process of expanding the sales territory of our Korean distributor to the major pacific rim countries as well as developing distributor relations for Europe and India.

7. *Developing sales literature.* This literature will help support sales and distribution efforts. In addition, CES attendance at seminars will help distributors and regulators better understand the Xact technology and its broad applications.

8. *Looking for partners to help address the mercury monitoring market.* Discussions with sources of capital are in progress that might provide supplemental resources to more aggressively attack the mercury monitoring market. In addition, CES is currently in discussions with integrators to help service the mercury CEMS market and with key component suppliers to provide support. These discussions have already resulted in labor

and hardware support from an X-ray detector manufacture in the form of equipment loans and applications development valued on the order of $100,000 to develop the mercury monitoring application.

7.0 References

1. U.S. Environmental Protection Agency. Air Toxics Strategy Fact Sheet. EPA Technology Transfer Network Air Toxics Website. http://www.epa.gov/ttn/atw/urban/strategyfs0303.pdf (accessed September 2006).
2. Prieditis, H.; Adamson, I.Y. 2002. Comparative Pulmonary Toxicity of Various Soluble Metals Found in Urban Particulate Dust; *Exp. Lung. Res.*, *28*, 563-576.
3. Monn, C.; Becker, S. 1999. Cytotoxicity and Induction of Proinflammatory Cytokines from Human Monocytes Exposed to Fine ($PM_{2.5}$) and Coarse Particles ($PM_{10-2.5}$) in Outdoor and Indoor Air; *Tox. Appl. Pharm., 155*, 245-252.
4. U.S. Environmental Protection Agency. 2005. National Emissions Standards for Hazardous Air Pollutants for Source Categories; *Code of Federal Regulations, 40 CFR 63*; U.S. Government Printing Office: Washington, DC.
5. U.S. Environmental Protection Agency. 2005. Method 29, Determination of Metals Emissions from Stationary Sources; *Code of Federal Regulations, 40 CFR 60*; U.S. Government Printing Office: Washington, DC.
6. Rigo, H.G.; Chandler A.J. 1999. Quantitation Limits for Reference Methods 23, 26, and 29; *J. Air & Waste Manage. Assoc.*, *49*, 399-411.
7. American Society of Mechanical Engineers [ASME], Research Committee on Industrial and Municipal Waste. 2001. *Reference Method Accuracy and Precision (ReMAP): Phase 1, Precision of Manual Stack Emission Measurements*; Report No. CRTD-60; ASME International: Washington, DC.
8. Eli Lilly and Company. 2005. Alternative Monitoring Petition for the Solid-Liquid Incinerator, Tippecanoe Laboratories: Lafayette, IN.
9. Zhang, H.; Yueh, F.Y.; Singh, J.P. 2002. Evaluation of the Potential of Laser-Induced Breakdown Spectroscopy for Detection of Trace Element in Liquid; *J. Air & Waste Manage. Assoc.*, *51*, 681-687.
10. Seltzer, M.D. 2000. Performance Testing of a Multimetals Continuous Emissions Monitor; *J. Air & Waste Manage. Assoc., 50,* 1010-1016.
11. Sky +. 1998. *1997 Performance Testing of Multi-Metal Continuous Emissions Monitors*; DOE/ID-10665. U.S. Department of Energy, Idaho Operations Office: Idaho Falls, ID.
12. U.S. Environmental Protection Agency. 2005. Method 301, Field Validation of Pollution Measurement Methods for Various Media; *Code of Federal Regulations, 40 CFR 56*; U.S. Government Printing Office: Washington, DC.

and hardware support from an X-ray detector manufacture in the form of equipment loans and applications development valued on the order of $100,000 to develop the mercury monitoring application.

7.0 References

1. U.S. Environmental Protection Agency. Air Toxics Strategy Fact Sheet. EPA Technology Transfer Network Air Toxics Website. http://www.epa.gov/ttn/atw/urban/strategyfs0303.pdf (accessed September 2006).
2. Prieditis, H.; Adamson, I.Y. 2002. Comparative Pulmonary Toxicity of Various Soluble Metals Found in Urban Particulate Dust; *Exp. Lung. Res.*, *28*, 563-576.
3. Monn, C.; Becker, S. 1999. Cytotoxicity and Induction of Proinflammatory Cytokines from Human Monocytes Exposed to Fine ($PM_{2.5}$) and Coarse Particles ($PM_{10-2.5}$) in Outdoor and Indoor Air; *Tox. Appl. Pharm., 155*, 245-252.
4. U.S. Environmental Protection Agency. 2005. National Emissions Standards for Hazardous Air Pollutants for Source Categories; *Code of Federal Regulations, 40 CFR 63*; U.S. Government Printing Office: Washington, DC.
5. U.S. Environmental Protection Agency. 2005. Method 29, Determination of Metals Emissions from Stationary Sources; *Code of Federal Regulations, 40 CFR 60*; U.S. Government Printing Office: Washington, DC.
6. Rigo, H.G.; Chandler A.J. 1999. Quantitation Limits for Reference Methods 23, 26, and 29; *J. Air & Waste Manage. Assoc.*, *49*, 399-411.
7. American Society of Mechanical Engineers [ASME], Research Committee on Industrial and Municipal Waste. 2001. *Reference Method Accuracy and Precision (ReMAP): Phase 1, Precision of Manual Stack Emission Measurements*; Report No. CRTD-60; ASME International: Washington, DC.
8. Eli Lilly and Company. 2005. Alternative Monitoring Petition for the Solid-Liquid Incinerator, Tippecanoe Laboratories: Lafayette, IN.
9. Zhang, H.; Yueh, F.Y.; Singh, J.P. 2002. Evaluation of the Potential of Laser-Induced Breakdown Spectroscopy for Detection of Trace Element in Liquid; *J. Air & Waste Manage. Assoc.*, *51*, 681-687.
10. Seltzer, M.D. 2000. Performance Testing of a Multimetals Continuous Emissions Monitor; *J. Air & Waste Manage. Assoc., 50,* 1010-1016.
11. Sky +. 1998. *1997 Performance Testing of Multi-Metal Continuous Emissions Monitors*; DOE/ID-10665. U.S. Department of Energy, Idaho Operations Office: Idaho Falls, ID.
12. U.S. Environmental Protection Agency. 2005. Method 301, Field Validation of Pollution Measurement Methods for Various Media; *Code of Federal Regulations, 40 CFR 56*; U.S. Government Printing Office: Washington, DC.

13. Yanca, C.A.; Barth, D.C.; Petterson, K.A.; Nakanishi, M.P.; Johnsen, B.E.; Cooper, J.A.; Lambert, R.H.; Bivins, D.G. 2006. Validation of Three New Methods for Determination of Metal Emissions using a Modified EPA Method 301. *J. Air & Waste Manage. Assoc.*, *56*, 1733–1742.

14. U.S. Environmental Protection Agency. 2002. Continuous Emissions Monitoring; *Code of Federal Regulations, 40 CFR 75*; U.S. Government Printing Office: Washington, DC.

15. Perry, R.H.; Green, D.W; Editors. 1984. Perry's Chemical Engineers' Handbook. 6th Ed. McGraw-Hill Book Company: New York.

16. U.S. Environmental Protection Agency. Clean Air Mercury Rule. http://www.epa.gov/mercuryrule (accessed August 2007).

13. Yanca, C.A.; Barth, D.C.; Petterson, K.A.; Nakanishi, M.P.; Johnsen, B.E.; Cooper, J.A.; Lambert, R.H.; Bivins, D.G. 2006. Validation of Three New Methods for Determination of Metal Emissions using a Modified EPA Method 301. *J. Air & Waste Manage. Assoc.*, *56*, 1733–1742.

14. U.S. Environmental Protection Agency. 2002. Continuous Emissions Monitoring; *Code of Federal Regulations, 40 CFR 75*; U.S. Government Printing Office: Washington, DC.

15. Perry, R.H.; Green, D.W; Editors. 1984. Perry's Chemical Engineers' Handbook. 6th Ed. McGraw-Hill Book Company: New York.

16. U.S. Environmental Protection Agency. Clean Air Mercury Rule. http://www.epa.gov/mercuryrule (accessed August 2007).

Appendix A to the Final Report

Feasibility of Monitoring Heavy Metal Emissions from a Coal-Fired Thermal Hazardous Waste Incinerator Using a Multi-Metal Continuous Emissions Monitor

EPA Contract No.: EP-D-07-026

August 30th, 2007

Submitted by:

Cooper Environmental Services LLC

10180 SW Nimbus Ave, Ste J6

Portland, OR 97223

Appendix A to the Final Report

Feasibility of Monitoring Heavy Metal Emissions from a Coal-Fired Thermal Hazardous Waste Incinerator Using a Multi-Metal Continuous Emissions Monitor

EPA Contract No.: EP-D-07-026

August 30th, 2007

Submitted by:

Cooper Environmental Services LLC

10180 SW Nimbus Ave, Ste J6

Portland, OR 97223

1.0 Introduction

The initial results from the testing of the CES Xact at the Multi-Pollutant Control Research Facility (MPCRF) are enumerated in Table 1. These results indicate a significant discrepancy (about 25%) between the Xact and the Quantitative Aerosol Generator (QAG) when sampling stack gas and a somewhat smaller discrepancy when sampling ambient air. These results were based on what are now believed to be inaccurate measurements of the amount of water in the stack gas. The Xact dries the sampled flow before measurement to give a concentration for each result in terms of dry standard cubic meters (dscm). The QAG, however, was spiking into what should be a wet gas stream (the stack gas sample into which the QAG aerosol was spiked was taken downstream of a wet scrubber and transported using flex line heated to 250 °F). To accurately compare the Xact and the QAG, the water in the stack gas must be taken into account. This appendix presents evidence in support of the conclusion that the water measurement used to generate these results was inaccurate, and also outlines why other possible explanations for this discrepancy were discounted.

2.0 Evaluation of Potential Sources of QAG-Xact Discrepancy

Of particular interest in examining the difference between the concentration measured by the Xact and that emitted by the QAG is that fact that the Xact is reporting a higher concentration than the QAG is emitting. It is therefore unlikely that much if any of the particulate or vapor-phase emissions were being lost to the walls of either the QAG or the transport line. To attempt to explain why the Xact was high relative to the QAG, a list of possible explanations was generated as follows:

1. Inaccurate measurement of QAG flow
2. Problem with the Xact X-ray Fluorescence (XRF) calibration or flow calibration
3. Evaporative loss in the QAG
4. Leak in the transport line
5. Matrix (stack gas) effects
6. Inaccurate measurement of moisture in stack gas

2.1 Inaccurate Measurement of QAG Flow

The QAG reference aerosol concentration (C_i^{QAG}) is determined using the analyte concentration in the nebulized solution (C_i^s, µg/g), the solution emission rate (R_m, g/min) corrected for vapor loss (R_v, g/min), and the total volume of gas used to create the aerosol (F_t, slpm).

$$C_i^{QAG} = \frac{C_i^s}{F_t}(R_m - R_v) \qquad \textbf{(Eq. 1)}$$

1.0 Introduction

The initial results from the testing of the CES Xact at the Multi-Pollutant Control Research Facility (MPCRF) are enumerated in Table 1. These results indicate a significant discrepancy (about 25%) between the Xact and the Quantitative Aerosol Generator (QAG) when sampling stack gas and a somewhat smaller discrepancy when sampling ambient air. These results were based on what are now believed to be inaccurate measurements of the amount of water in the stack gas. The Xact dries the sampled flow before measurement to give a concentration for each result in terms of dry standard cubic meters (dscm). The QAG, however, was spiking into what should be a wet gas stream (the stack gas sample into which the QAG aerosol was spiked was taken downstream of a wet scrubber and transported using flex line heated to 250 °F). To accurately compare the Xact and the QAG, the water in the stack gas must be taken into account. This appendix presents evidence in support of the conclusion that the water measurement used to generate these results was inaccurate, and also outlines why other possible explanations for this discrepancy were discounted.

2.0 Evaluation of Potential Sources of QAG-Xact Discrepancy

Of particular interest in examining the difference between the concentration measured by the Xact and that emitted by the QAG is that fact that the Xact is reporting a higher concentration than the QAG is emitting. It is therefore unlikely that much if any of the particulate or vapor-phase emissions were being lost to the walls of either the QAG or the transport line. To attempt to explain why the Xact was high relative to the QAG, a list of possible explanations was generated as follows:

1. Inaccurate measurement of QAG flow
2. Problem with the Xact X-ray Fluorescence (XRF) calibration or flow calibration
3. Evaporative loss in the QAG
4. Leak in the transport line
5. Matrix (stack gas) effects
6. Inaccurate measurement of moisture in stack gas

2.1 Inaccurate Measurement of QAG Flow

The QAG reference aerosol concentration (C_i^{QAG}) is determined using the analyte concentration in the nebulized solution (C_i^s, µg/g), the solution emission rate (R_m, g/min) corrected for vapor loss (R_v, g/min), and the total volume of gas used to create the aerosol (F_t, slpm).

$$C_i^{QAG} = \frac{C_i^s}{F_t}(R_m - R_v) \qquad \textbf{(Eq. 1)}$$

Table 1. Initial Results Uncorrected for Moisture

Conc. Level	Xact Start Time	Xact End Time	QAG Aerosol Conc (µg/m³)					Background Corrected Xact Conc. (µg/m³)					Xact/QAG				
			Cr	As	Cd	Hg	Pb	Cr	As	Cd	Hg	Pb	Cr	As	Cd	Hg	Pb
Blank Spike	10:15	10:30	0.00	0.00	0.00	0.00	0.00	0.00	0.40	1.50	23.10	0.26	NA	NA	NA	NA	NA
	10:30	10:45	0.00	0.00	0.00	0.00	0.00	0.00	0.00	0.88	21.31	0.80	NA	NA	NA	NA	NA
	10:45	11:00	0.00	0.00	0.00	0.00	0.00	0.00	0.33	1.42	14.28	0.00	NA	NA	NA	NA	NA
	11:00	11:15	0.00	0.00	0.00	0.00	0.00	0.00	0.00	0.00	10.64	0.66	NA	NA	NA	NA	NA
	11:15	11:30	0.00	0.00	0.00	0.00	0.00	0.00	0.49	0.00	8.85	0.12	NA	NA	NA	NA	NA
	11:30	11:45	0.00	0.00	0.00	0.00	0.00	0.00	0.23	0.00	7.41	0.12	NA	NA	NA	NA	NA
	11:45	12:00	0.00	0.00	0.00	0.00	0.00	0.00	0.43	1.08	6.28	0.43	NA	NA	NA	NA	NA
Low	2:45	3:00	23.95	23.93	23.87	23.91	23.97	29.96	28.21	28.94	33.21	26.17	1.25	1.18	1.21	1.39	1.09
	3:00	3:15	23.95	23.93	23.87	23.91	23.97	27.71	28.43	29.86	34.02	26.36	1.16	1.19	1.25	1.42	1.10
	3:15	3:30	24.19	24.17	24.11	24.15	24.21	29.35	29.73	31.50	32.36	25.61	1.21	1.23	1.31	1.34	1.06
	3:30	3:45	24.19	24.17	24.11	24.15	24.21	31.19	30.32	28.48	32.79	26.50	1.29	1.25	1.18	1.36	1.09
	3:45	4:00	24.19	24.17	24.11	24.15	24.21	27.20	30.01	28.57	32.68	25.98	1.12	1.24	1.18	1.35	1.07
	4:00	4:15	24.44	24.41	24.35	24.39	24.46	27.28	28.45	29.01	32.59	28.30	1.12	1.17	1.19	1.34	1.16
	4:15	4:30	24.55	24.53	24.47	24.51	24.57	28.75	31.08	31.70	31.90	25.63	1.17	1.27	1.30	1.30	1.04
	4:30	4:45	24.55	24.53	24.47	24.51	24.57	28.94	30.97	28.70	33.22	28.29	1.18	1.26	1.17	1.36	1.15
	4:45	5:00	24.55	24.53	24.47	24.51	24.57	29.29	30.32	30.11	32.07	27.85	1.19	1.24	1.23	1.31	1.13
	5:00	5:15	24.55	24.53	24.47	24.51	24.57	30.72	29.38	31.85	31.13	26.65	1.25	1.20	1.30	1.27	1.08
Mid	9:15	9:30	80.07	80.05	80.09	80.11	80.07	95.03	101.84	97.05	102.81	88.41	1.19	1.27	1.21	1.28	1.10
	9:30	9:45	80.07	80.05	80.09	80.11	80.07	95.36	102.82	99.86	104.43	90.66	1.19	1.28	1.25	1.30	1.13
	9:45	10:00	80.07	80.05	80.09	80.11	80.07	96.74	102.13	104.27	105.87	91.75	1.21	1.28	1.30	1.32	1.15
	10:00	10:15	79.52	79.50	79.54	79.56	79.52	95.40	101.44	96.64	104.64	89.02	1.20	1.28	1.22	1.32	1.12
	10:15	10:30	81.56	81.54	81.58	81.60	81.56	97.09	102.63	98.80	106.84	90.84	1.19	1.26	1.21	1.31	1.11
	10:30	10:45	81.56	81.54	81.58	81.60	81.56	98.83	104.87	103.73	107.02	90.95	1.21	1.29	1.27	1.31	1.12
	10:45	11:00	81.56	81.54	81.58	81.60	81.56	96.78	100.45	99.61	103.71	91.32	1.19	1.23	1.22	1.27	1.12
	11:00	11:15	80.49	80.47	80.51	80.53	80.49	97.52	102.01	99.30	104.61	90.42	1.21	1.27	1.23	1.30	1.12
	11:15	11:30	80.70	80.68	80.72	80.74	80.70	97.60	101.78	98.58	104.60	89.65	1.21	1.26	1.22	1.30	1.11
	11:30	11:45	80.70	80.68	80.72	80.74	80.70	96.32	100.05	94.45	104.39	91.52	1.19	1.24	1.17	1.29	1.13
	11:45	12:00	80.70	80.68	80.72	80.74	80.70	99.68	105.65	108.04	106.45	93.53	1.24	1.31	1.34	1.32	1.16
High Stack Gas	12:45	1:00	222.93	222.79	222.21	222.57	223.06	266.75	280.10	275.16	292.08	245.82	1.20	1.26	1.24	1.31	1.10
	1:00	1:15	219.38	219.25	218.68	219.03	219.52	266.66	279.51	264.46	293.82	248.18	1.22	1.27	1.21	1.34	1.13
	1:15	1:30	219.38	219.25	218.68	219.03	219.52	262.46	277.26	264.40	280.60	243.97	1.20	1.26	1.21	1.28	1.11
	1:30	1:45	219.38	219.25	218.68	219.03	219.52	273.43	286.62	273.00	293.92	252.36	1.25	1.31	1.25	1.34	1.15
	1:45	2:00	217.94	217.81	217.24	217.59	218.07	271.94	289.75	282.36	294.21	252.26	1.25	1.33	1.30	1.35	1.16
	2:00	2:15	215.14	215.01	214.45	214.79	215.27	275.05	290.57	289.08	294.91	252.08	1.28	1.35	1.35	1.37	1.17
	2:15	2:30	215.14	215.01	214.45	214.79	215.27	266.92	280.31	275.81	284.64	243.49	1.24	1.30	1.29	1.33	1.13
	2:30	2:45	215.14	215.01	214.45	214.79	215.27	260.84	272.15	271.73	275.46	236.20	1.21	1.27	1.27	1.28	1.10
	2:45	3:00	214.94	214.81	214.25	214.59	215.07	267.62	282.02	273.88	290.55	245.60	1.25	1.31	1.28	1.35	1.14
	3:00	3:15	216.59	216.46	215.89	216.24	216.72	267.36	277.35	266.38	289.11	245.43	1.23	1.28	1.23	1.34	1.13
	3:30	3:45	107.15	107.09	106.81	106.98	107.22	118.75	124.52	122.78	128.68	109.87	1.11	1.16	1.15	1.20	1.02
	3:45	4:00	107.15	107.09	106.81	106.98	107.22	114.50	125.23	116.98	124.64	107.74	1.07	1.17	1.10	1.17	1.00
	4:00	4:15	109.55	109.48	109.20	109.37	109.61	116.27	124.89	121.82	120.88	106.72	1.06	1.14	1.12	1.11	0.97
	4:15	4:30	109.55	109.48	109.20	109.37	109.61	117.46	127.80	123.13	123.59	108.88	1.07	1.17	1.13	1.13	0.99
											Flue Gas	**AVE**	**1.21**	**1.26**	**1.24**	**1.32**	**1.12**
												SD	**0.04**	**0.04**	**0.05**	**0.04**	**0.03**
												%RSD	**0.03**	**0.03**	**0.04**	**0.03**	**0.03**
												AVE	**1 08**	**1 16**	**1 12**	**1 1**	**1 00**

Table 1. Initial Results Uncorrected for Moisture

Conc. Level	Xact Start Time	Xact End Time	QAG Aerosol Conc (µg/m³)					Background Corrected Xact Conc. (µg/m³)					Xact/QAG				
			Cr	As	Cd	Hg	Pb	Cr	As	Cd	Hg	Pb	Cr	As	Cd	Hg	Pb
Blank Spike	10:15	10:30	0.00	0.00	0.00	0.00	0.00	0.00	0.40	1.50	23.10	0.26	NA	NA	NA	NA	NA
	10:30	10:45	0.00	0.00	0.00	0.00	0.00	0.00	0.00	0.88	21.31	0.80	NA	NA	NA	NA	NA
	10:45	11:00	0.00	0.00	0.00	0.00	0.00	0.00	0.33	1.42	14.28	0.00	NA	NA	NA	NA	NA
	11:00	11:15	0.00	0.00	0.00	0.00	0.00	0.00	0.00	0.00	10.64	0.66	NA	NA	NA	NA	NA
	11:15	11:30	0.00	0.00	0.00	0.00	0.00	0.00	0.49	0.00	8.85	0.12	NA	NA	NA	NA	NA
	11:30	11:45	0.00	0.00	0.00	0.00	0.00	0.00	0.23	0.00	7.41	0.12	NA	NA	NA	NA	NA
	11:45	12:00	0.00	0.00	0.00	0.00	0.00	0.00	0.43	1.08	6.28	0.43	NA	NA	NA	NA	NA
Low	2:45	3:00	23.95	23.93	23.87	23.91	23.97	29.96	28.21	28.94	33.21	26.17	1.25	1.18	1.21	1.39	1.09
	3:00	3:15	23.95	23.93	23.87	23.91	23.97	27.71	28.43	29.86	34.02	26.36	1.16	1.19	1.25	1.42	1.10
	3:15	3:30	24.19	24.17	24.11	24.15	24.21	29.35	29.73	31.50	32.36	25.61	1.21	1.23	1.31	1.34	1.06
	3:30	3:45	24.19	24.17	24.11	24.15	24.21	31.19	30.32	28.48	32.79	26.50	1.29	1.25	1.18	1.36	1.09
	3:45	4:00	24.19	24.17	24.11	24.15	24.21	27.20	30.01	28.57	32.68	25.98	1.12	1.24	1.18	1.35	1.07
	4:00	4:15	24.44	24.41	24.35	24.39	24.46	27.28	28.45	29.01	32.59	28.30	1.12	1.17	1.19	1.34	1.16
	4:15	4:30	24.55	24.53	24.47	24.51	24.57	28.75	31.08	31.70	31.90	25.63	1.17	1.27	1.30	1.30	1.04
	4:30	4:45	24.55	24.53	24.47	24.51	24.57	28.94	30.97	28.70	33.22	28.29	1.18	1.26	1.17	1.36	1.15
	4:45	5:00	24.55	24.53	24.47	24.51	24.57	29.29	30.32	30.11	32.07	27.85	1.19	1.24	1.23	1.31	1.13
	5:00	5:15	24.55	24.53	24.47	24.51	24.57	30.72	29.38	31.85	31.13	26.65	1.25	1.20	1.30	1.27	1.08
Mid	9:15	9:30	80.07	80.05	80.09	80.11	80.07	95.03	101.84	97.05	102.81	88.41	1.19	1.27	1.21	1.28	1.10
	9:30	9:45	80.07	80.05	80.09	80.11	80.07	95.36	102.82	99.86	104.43	90.66	1.19	1.28	1.25	1.30	1.13
	9:45	10:00	80.07	80.05	80.09	80.11	80.07	96.74	102.13	104.27	105.87	91.75	1.21	1.28	1.30	1.32	1.15
	10:00	10:15	79.52	79.50	79.54	79.56	79.52	95.40	101.44	96.64	104.64	89.02	1.20	1.28	1.22	1.32	1.12
	10:15	10:30	81.56	81.54	81.58	81.60	81.56	97.09	102.63	98.80	106.84	90.84	1.19	1.26	1.21	1.31	1.11
	10:30	10:45	81.56	81.54	81.58	81.60	81.56	98.83	104.87	103.73	107.02	90.95	1.21	1.29	1.27	1.31	1.12
	10:45	11:00	81.56	81.54	81.58	81.60	81.56	96.78	100.45	99.61	103.71	91.32	1.19	1.23	1.22	1.27	1.12
	11:00	11:15	80.49	80.47	80.51	80.53	80.49	97.52	102.01	99.30	104.61	90.42	1.21	1.27	1.23	1.30	1.12
	11:15	11:30	80.70	80.68	80.72	80.74	80.70	97.60	101.78	98.58	104.60	89.65	1.21	1.26	1.22	1.30	1.11
	11:30	11:45	80.70	80.68	80.72	80.74	80.70	96.32	100.05	94.45	104.39	91.52	1.19	1.24	1.17	1.29	1.13
	11:45	12:00	80.70	80.68	80.72	80.74	80.70	99.68	105.65	108.04	106.45	93.53	1.24	1.31	1.34	1.32	1.16
High Stack Gas	12:45	1:00	222.93	222.79	222.21	222.57	223.06	266.75	280.10	275.16	292.08	245.82	1.20	1.26	1.24	1.31	1.10
	1:00	1:15	219.38	219.25	218.68	219.03	219.52	266.66	279.51	264.46	293.82	248.18	1.22	1.27	1.21	1.34	1.13
	1:15	1:30	219.38	219.25	218.68	219.03	219.52	262.46	277.26	264.40	280.60	243.97	1.20	1.26	1.21	1.28	1.11
	1:30	1:45	219.38	219.25	218.68	219.03	219.52	273.43	286.62	273.00	293.92	252.36	1.25	1.31	1.25	1.34	1.15
	1:45	2:00	217.94	217.81	217.24	217.59	218.07	271.94	289.75	282.36	294.21	252.26	1.25	1.33	1.30	1.35	1.16
	2:00	2:15	215.14	215.01	214.45	214.79	215.27	275.05	290.57	289.08	294.91	252.08	1.28	1.35	1.35	1.37	1.17
	2:15	2:30	215.14	215.01	214.45	214.79	215.27	266.92	280.31	275.81	284.64	243.49	1.24	1.30	1.29	1.33	1.13
	2:30	2:45	215.14	215.01	214.45	214.79	215.27	260.84	272.15	271.73	275.46	236.20	1.21	1.27	1.27	1.28	1.10
	2:45	3:00	214.94	214.81	214.25	214.59	215.07	267.62	282.02	273.88	290.55	245.60	1.25	1.31	1.28	1.35	1.14
	3:00	3:15	216.59	216.46	215.89	216.24	216.72	267.36	277.35	266.38	289.11	245.43	1.23	1.28	1.23	1.34	1.13
	3:30	3:45	107.15	107.09	106.81	106.98	107.22	118.75	124.52	122.78	128.68	109.87	1.11	1.16	1.15	1.20	1.02
	3:45	4:00	107.15	107.09	106.81	106.98	107.22	114.50	125.23	116.98	124.64	107.74	1.07	1.17	1.10	1.17	1.00
	4:00	4:15	109.55	109.48	109.20	109.37	109.61	116.27	124.89	121.82	120.88	106.72	1.06	1.14	1.12	1.11	0.97
	4:15	4:30	109.55	109.48	109.20	109.37	109.61	117.46	127.80	123.13	123.59	108.88	1.07	1.17	1.13	1.13	0.99
											Flue Gas	**AVE**	**1.21**	**1.26**	**1.24**	**1.32**	**1.12**
												SD	**0.04**	**0.04**	**0.05**	**0.04**	**0.03**
												%RSD	**0.03**	**0.03**	**0.04**	**0.03**	**0.03**
												AVE	**1 08**	**1 16**	**1 12**	**1 1**	**1 00**

During the experiments at the MPCRF, the QAG concentration flow (F_t) was measured in standard liters per minute (slpm) using a newly purchased and calibrated Rosemount orifice plate flow meter.[1] Prior to shipment to the field, this flow meter was compared to Sierra Instruments thermal mass flow meter.[2] The two meters were found to be within 5% of each other. Furthermore, after spiking was completed, the same two meters were compared against each other at a rate of about 140 slpm. The meters differed by less than 1%, both when sampling stack gas and when sampling ambient air. It is therefore highly unlikely that the total QAG flow (F_t) is being measured inaccurately.

2.2 Problems with Xact XRF or Flow Calibration

The Xact draws a small sample of stack gas (~ 0.5 Lpm) through a reactive filter tape. After sampling for 15 minutes the tape is advanced about two inches to the analysis area where the mass of each analyte is determined by XRF while the next sample is being collected. The XRF-determined mass is then divided by the totalized flow to give the concentration in µg/dscm. Errors in the Xact measurement can result primarily from errors in the XRF measurement or errors in the flow measurement.

Prior to shipment, the XRF portion of the Xact was calibrated using thin-film standards available from Micromatter.[3] These standards are typically used for the calibration of XRF instrumentation used for the chemical speciation of PM_{10} and $PM_{2.5}$ filters.[4] The XRF calibration was also checked with the same standards used for calibration on three different days: twice during set up and one during a day of testing (7/30/07). Table 2 shows the results of these XRF calibration checks. In all cases, the reported concentration differs from the calibrated value by less than two percent, indicating that the Xact's XRF calibration was stable and accurate.

Table 2. XRF Calibration Checks with Thin Film Standards

		7/26/2007		7/28/2007		7/30/2007	
Element	Calibrated Value (µg)	Reported Value (µg)	% Error	Reported Value (µg)	% Error	Reported Value (µg)	% Error
Cr	8.13	8.09	0.44				
As	7.25	7.23	0.30	7.25	0.04	7.19	0.89
Cd	5.44	5.54	1.86	5.41	0.55	5.44	0.04
Hg	9.59	9.53	0.67				
Pb	8.04	7.99	0.62				

The Xact measures two separate flows to calculate the flow of stack gas: the dilution flow (~ 0.20 slpm) and the total flow (~0.70 slpm). The Xact's flow sensors were recalibrated in the field prior to testing using a Dry Cal from Bios International[5] as a reference flow meter. On the day after testing, the Xact's flow sensors were again compared against the Dry Cal both when sampling stack gas and when sampling ambient air. The results are shown in Table 3. The error in all cases was less than 3.5 percent, indicating that the Xact's flow sensors were accurate both when sampling ambient air and when sampling stack gas.

During the experiments at the MPCRF, the QAG concentration flow (F_t) was measured in standard liters per minute (slpm) using a newly purchased and calibrated Rosemount orifice plate flow meter.[1] Prior to shipment to the field, this flow meter was compared to Sierra Instruments thermal mass flow meter.[2] The two meters were found to be within 5% of each other. Furthermore, after spiking was completed, the same two meters were compared against each other at a rate of about 140 slpm. The meters differed by less than 1%, both when sampling stack gas and when sampling ambient air. It is therefore highly unlikely that the total QAG flow (F_t) is being measured inaccurately.

2.2 Problems with Xact XRF or Flow Calibration

The Xact draws a small sample of stack gas (~ 0.5 Lpm) through a reactive filter tape. After sampling for 15 minutes the tape is advanced about two inches to the analysis area where the mass of each analyte is determined by XRF while the next sample is being collected. The XRF-determined mass is then divided by the totalized flow to give the concentration in µg/dscm. Errors in the Xact measurement can result primarily from errors in the XRF measurement or errors in the flow measurement.

Prior to shipment, the XRF portion of the Xact was calibrated using thin-film standards available from Micromatter.[3] These standards are typically used for the calibration of XRF instrumentation used for the chemical speciation of PM_{10} and $PM_{2.5}$ filters.[4] The XRF calibration was also checked with the same standards used for calibration on three different days: twice during set up and one during a day of testing (7/30/07). Table 2 shows the results of these XRF calibration checks. In all cases, the reported concentration differs from the calibrated value by less than two percent, indicating that the Xact's XRF calibration was stable and accurate.

Table 2. XRF Calibration Checks with Thin Film Standards

		7/26/2007		7/28/2007		7/30/2007	
Element	Calibrated Value (µg)	Reported Value (µg)	% Error	Reported Value (µg)	% Error	Reported Value (µg)	% Error
Cr	8.13	8.09	0.44				
As	7.25	7.23	0.30	7.25	0.04	7.19	0.89
Cd	5.44	5.54	1.86	5.41	0.55	5.44	0.04
Hg	9.59	9.53	0.67				
Pb	8.04	7.99	0.62				

The Xact measures two separate flows to calculate the flow of stack gas: the dilution flow (~ 0.20 slpm) and the total flow (~0.70 slpm). The Xact's flow sensors were recalibrated in the field prior to testing using a Dry Cal from Bios International[5] as a reference flow meter. On the day after testing, the Xact's flow sensors were again compared against the Dry Cal both when sampling stack gas and when sampling ambient air. The results are shown in Table 3. The error in all cases was less than 3.5 percent, indicating that the Xact's flow sensors were accurate both when sampling ambient air and when sampling stack gas.

Table 3. Xact Flow Sensor Checks

Condition	Total Flow			Dilution Flow		
	Dry Cal (slpm)	Dry Sample (slpm)	% Error	Dry Cal (slpm)	Dilution Flow (slpm)	% Error
Sampling Stack Gas	0.64	0.66	3.13	0.202	0.20	0.99
Sampling Ambient Air	0.66	0.68	3.03	0.194	0.20	3.09

2.3 Evaporative Loss in the QAG

Equation 1 shows that the nebulization rate of solution is the difference between the solution mass loss rate (R_m, g/min) as measured by an analytical balance minus the solution evaporation rate (R_v, g/min). The evaporation rate for this experiment was about 0.0005 g/min and is based on a measured temperature difference. The evaporation rate therefore accounts for less than 0.2 percent of the overall solution loss rate, making it an unreasonable source of a 25-percent discrepancy between the QAG and the Xact. Assuming the evaporation rate was high enough to create a discrepancy between the Xact and the QAG, the Xact would report values lower than those of the QAG because the QAG would be nebulizing far less solution than measured. Clearly, evaporative loss is not source of the 25% discrepancy because the Xact is reporting a higher concentration than the QAG.

2.4 Leak in the Transport Line

Figure 1 is a schematic showing the experimental set-up used during the testing at the Multi-Pollutant Control Research Facility.

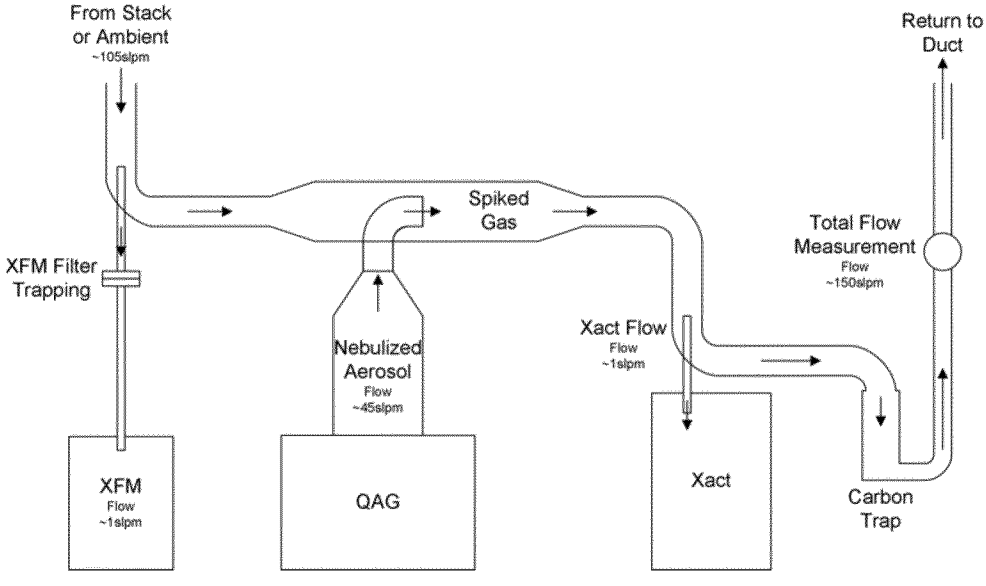

Figure 1. Experimental Set-up

Table 3. Xact Flow Sensor Checks

Condition	Total Flow			Dilution Flow		
	Dry Cal (slpm)	Dry Sample (slpm)	% Error	Dry Cal (slpm)	Dilution Flow (slpm)	% Error
Sampling Stack Gas	0.64	0.66	3.13	0.202	0.20	0.99
Sampling Ambient Air	0.66	0.68	3.03	0.194	0.20	3.09

2.3 Evaporative Loss in the QAG

Equation 1 shows that the nebulization rate of solution is the difference between the solution mass loss rate (R_m, g/min) as measured by an analytical balance minus the solution evaporation rate (R_v, g/min). The evaporation rate for this experiment was about 0.0005 g/min and is based on a measured temperature difference. The evaporation rate therefore accounts for less than 0.2 percent of the overall solution loss rate, making it an unreasonable source of a 25-percent discrepancy between the QAG and the Xact. Assuming the evaporation rate was high enough to create a discrepancy between the Xact and the QAG, the Xact would report values lower than those of the QAG because the QAG would be nebulizing far less solution than measured. Clearly, evaporative loss is not source of the 25% discrepancy because the Xact is reporting a higher concentration than the QAG.

2.4 Leak in the Transport Line

Figure 1 is a schematic showing the experimental set-up used during the testing at the Multi-Pollutant Control Research Facility.

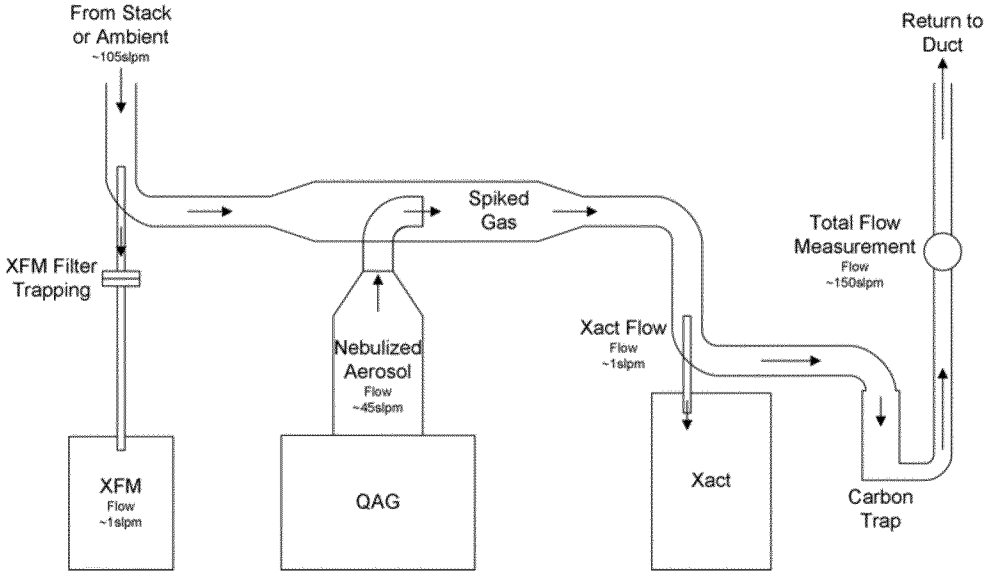

Figure 1. Experimental Set-up

The flow meter used for the calculation of the QAG aerosol concentration is located downstream of the both the Xact and the QAG. A leak in the transport line between the Xact and the flow meter could result in the Xact reporting a higher than expected reading. However, all the seals in this region were checked after testing and found to be adequate. Furthermore, the leak would need to be on the order of 30 to 40 slpm to get the 25-percent discrepancy observed. A leak of that magnitude would generate a great deal of noise and be detected almost immediately. It is therefore unlikely that a leak in the transport line is the source of the difference between the QAG and Xact-reported values.

2.5 Matrix (Stack Gas) Effects

Another potential explanation for the difference between the QAG and the Xact is the effect of the stack gas matrix, which could impact the transport and trapping efficiency of the spiked elements. During the course of the experiment, CES determined the ratio of each spiked element to cadmium when sampling both stack gas and ambient air. The five elements sampled represent metals in the particle phase (Cd, Cr, and Pb), mixed phase (As) and vapor phase (Hg). If the stack gas matrix inhibited the transport or trapping efficiency of the metals, then it is expected that one type of species would be more impacted than another (e.g., vapor phase species are more impacted than particle phase species). However, the ratios of each element to cadmium are the same for stack gas and ambient air (Table 4). Therefore, the transport and trapping of both particle phase and vapor phase species are unaffected by the physical and chemical characteristics of the gas matrix.

Table 4. Inter-Elemental Ratios

Matrix		Interelemental Ratios			
		Cr/Cd	As/Cd	Hg/Cd	Pb/Cd
Stack Gas	AVE	0.97	1.02	1.07	0.90
	STDEV	0.04	0.04	0.05	0.04
Ambient Air	AVE	0.96	1.04	1.03	0.89
	STDEV	0.01	0.02	0.03	0.02

2.6 Inaccurate Moisture Measurement

The Xact measures metal concentrations on a dry basis. The QAG aerosol, however, is being spiked into a relatively wet air stream. To compare the two concentrations, the QAG concentration must be calculated on a dry basis. The dry QAG flow rate F_t is determined using Equation 2. This value can then be used in Equation 1 to calculate the QAG aerosol concentration.

$$F_t = F_m (F_m - F_Q) P_w \qquad \textbf{(Eq. 2)}$$

Where:

F_t = Total QAG flow on a dry basis (slpm)

F_m = Total flow as measured by the experimental flow meter (slpm)

The flow meter used for the calculation of the QAG aerosol concentration is located downstream of the both the Xact and the QAG. A leak in the transport line between the Xact and the flow meter could result in the Xact reporting a higher than expected reading. However, all the seals in this region were checked after testing and found to be adequate. Furthermore, the leak would need to be on the order of 30 to 40 slpm to get the 25-percent discrepancy observed. A leak of that magnitude would generate a great deal of noise and be detected almost immediately. It is therefore unlikely that a leak in the transport line is the source of the difference between the QAG and Xact-reported values.

2.5 Matrix (Stack Gas) Effects

Another potential explanation for the difference between the QAG and the Xact is the effect of the stack gas matrix, which could impact the transport and trapping efficiency of the spiked elements. During the course of the experiment, CES determined the ratio of each spiked element to cadmium when sampling both stack gas and ambient air. The five elements sampled represent metals in the particle phase (Cd, Cr, and Pb), mixed phase (As) and vapor phase (Hg). If the stack gas matrix inhibited the transport or trapping efficiency of the metals, then it is expected that one type of species would be more impacted than another (e.g., vapor phase species are more impacted than particle phase species). However, the ratios of each element to cadmium are the same for stack gas and ambient air (Table 4). Therefore, the transport and trapping of both particle phase and vapor phase species are unaffected by the physical and chemical characteristics of the gas matrix.

Table 4. Inter-Elemental Ratios

Matrix		Interelemental Ratios			
		Cr/Cd	As/Cd	Hg/Cd	Pb/Cd
Stack Gas	AVE	0.97	1.02	1.07	0.90
	STDEV	0.04	0.04	0.05	0.04
Ambient Air	AVE	0.96	1.04	1.03	0.89
	STDEV	0.01	0.02	0.03	0.02

2.6 Inaccurate Moisture Measurement

The Xact measures metal concentrations on a dry basis. The QAG aerosol, however, is being spiked into a relatively wet air stream. To compare the two concentrations, the QAG concentration must be calculated on a dry basis. The dry QAG flow rate F_t is determined using Equation 2. This value can then be used in Equation 1 to calculate the QAG aerosol concentration.

$$F_t = F_m (F_m - F_Q) P_w \qquad \textbf{(Eq. 2)}$$

Where:

F_t = Total QAG flow on a dry basis (slpm)

F_m = Total flow as measured by the experimental flow meter (slpm)

F_Q = Total flow through the QAG (slpm) (dried compressed air)

P_w = The measured fraction of water

During testing, the XFM was used to determine fraction of water. The flow through the XFM filter, about 1 slpm, was dried using a silica gel trap prior to flow measurement. This silica gel trap was weighed before and after each sample and the difference was used to determine the fraction of water vapor in the sampled stack gas. A problem with this approach was later discovered; the silica gel was unlikely to trap all of the water in the gas stream. The temperature of the silica gel trap is believed to have been at about 80 to 90 °F and operating under a significant vacuum (approximately 12 in. Hg vacuum). Silica gel will typically lower the relative humidity to around 40%.[6] Under these conditions, air escaping the trap could still contain almost 10% moisture.[7] Therefore, the accuracy of this approach is questionable and could be the source of the observed discrepancy between the Xact and QAG.

To estimate the actual fraction of water present in the gas stream, it is reasonable to assume that the gas was saturated at temperatures and pressures present at the sampling point because the stack effluent was withdrawn from the duct immediately downstream of a wet scrubber,. The temperature in the duct was monitored throughout the experiment and averaged about 116 °F. The pressure in the duct was not measured; however, the pressure in the transport line was measured on a continuous basis using the Rosemount flow meter. During stack gas sampling and spiking, the pressure at that point was about 13.5 psia. The pressure in the duct would be somewhat higher and was estimated to be about 13.8 psia. This value corresponds well with engineering estimates of the pressure in the duct at minus 30 inches of water.[8] At this temperature and pressure, the moisture content of the duct would be about 26% by volume. The QAG flow rate was therefore adjusted based on this assumed moisture content in lieu of the potentially inaccurate XFM moisture measurement. For ambient spiking, the QAG flow rate was adjusted based on relative humidity as determined by a nearby meteorological station for the date and time of the experiment.[9] Experimental results with the adjusted QAG flow rates are shown in Table 5.

3.0 Conclusions

The most likely cause of the discrepancy between the QAG aerosol concentration and the Xact reported concentration is inaccuracy in the moisture measurement because (1) other possible sources for this error can be discounted, (2) there is ample reason to doubt the accuracy of the moisture measurement as it was made, and (3) it makes good engineering sense to assume saturation downstream of a wet scrubber. Future experiments of this nature should either find a more accurate way of measuring moisture content, or remove all moisture prior to the QAG concentration flow measurement.

F_Q = Total flow through the QAG (slpm) (dried compressed air)

P_w = The measured fraction of water

During testing, the XFM was used to determine fraction of water. The flow through the XFM filter, about 1 slpm, was dried using a silica gel trap prior to flow measurement. This silica gel trap was weighed before and after each sample and the difference was used to determine the fraction of water vapor in the sampled stack gas. A problem with this approach was later discovered; the silica gel was unlikely to trap all of the water in the gas stream. The temperature of the silica gel trap is believed to have been at about 80 to 90 °F and operating under a significant vacuum (approximately 12 in. Hg vacuum). Silica gel will typically lower the relative humidity to around 40%.[6] Under these conditions, air escaping the trap could still contain almost 10% moisture.[7] Therefore, the accuracy of this approach is questionable and could be the source of the observed discrepancy between the Xact and QAG.

To estimate the actual fraction of water present in the gas stream, it is reasonable to assume that the gas was saturated at temperatures and pressures present at the sampling point because the stack effluent was withdrawn from the duct immediately downstream of a wet scrubber,. The temperature in the duct was monitored throughout the experiment and averaged about 116 °F. The pressure in the duct was not measured; however, the pressure in the transport line was measured on a continuous basis using the Rosemount flow meter. During stack gas sampling and spiking, the pressure at that point was about 13.5 psia. The pressure in the duct would be somewhat higher and was estimated to be about 13.8 psia. This value corresponds well with engineering estimates of the pressure in the duct at minus 30 inches of water.[8] At this temperature and pressure, the moisture content of the duct would be about 26% by volume. The QAG flow rate was therefore adjusted based on this assumed moisture content in lieu of the potentially inaccurate XFM moisture measurement. For ambient spiking, the QAG flow rate was adjusted based on relative humidity as determined by a nearby meteorological station for the date and time of the experiment.[9] Experimental results with the adjusted QAG flow rates are shown in Table 5.

3.0 Conclusions

The most likely cause of the discrepancy between the QAG aerosol concentration and the Xact reported concentration is inaccuracy in the moisture measurement because (1) other possible sources for this error can be discounted, (2) there is ample reason to doubt the accuracy of the moisture measurement as it was made, and (3) it makes good engineering sense to assume saturation downstream of a wet scrubber. Future experiments of this nature should either find a more accurate way of measuring moisture content, or remove all moisture prior to the QAG concentration flow measurement.

Table 5. Results Assuming Saturation Downstream of Wet Scrubber

Conc. Level	QAG Aerosol Conc (μg/m³)					Background Corrected Xact Conc. (μg/m³)					Xact/QAG				
	Cr	As	Cd	Hg	Pb	Cr	As	Cd	Hg	Pb	Cr	As	Cd	Hg	Pb
Blank Spike	0	0	0	0	0	0	0.4	1.5	23.1	0.26	NA	NA	NA	NA	NA
	0	0	0	0	0	0	0	0.88	21.31	0.8	NA	NA	NA	NA	NA
	0	0	0	0	0	0	0.33	1.42	14.28	0	NA	NA	NA	NA	NA
	0	0	0	0	0	0	0	0	10.64	0.66	NA	NA	NA	NA	NA
	0	0	0	0	0	0	0.49	0	8.85	0.12	NA	NA	NA	NA	NA
	0	0	0	0	0	0	0.23	0	7.41	0.12	NA	NA	NA	NA	NA
	0	0	0	0	0	0	0.43	1.08	6.28	0.43	NA	NA	NA	NA	NA
Low	27.58	27.56	27.49	27.53	27.60	29.96	28.21	28.94	31.30	26.17	1.09	1.02	1.05	1.14	0.95
	27.58	27.56	27.49	27.53	27.60	27.71	28.43	29.86	32.11	26.36	1.00	1.03	1.09	1.17	0.96
	27.58	27.56	27.49	27.53	27.60	29.35	29.73	31.50	30.45	25.61	1.06	1.08	1.15	1.11	0.93
	27.58	27.56	27.49	27.53	27.60	31.19	30.32	28.48	30.88	26.50	1.13	1.10	1.04	1.12	0.96
	27.58	27.56	27.49	27.53	27.60	27.20	30.01	28.57	30.77	25.98	0.99	1.09	1.04	1.12	0.94
	27.86	27.83	27.76	27.81	27.88	27.28	28.45	29.01	30.68	28.30	0.98	1.02	1.04	1.10	1.02
	27.86	27.83	27.76	27.81	27.88	28.75	31.08	31.70	29.99	25.63	1.03	1.12	1.14	1.08	0.92
	27.86	27.83	27.76	27.81	27.88	28.94	30.97	28.70	31.31	28.29	1.04	1.11	1.03	1.13	1.01
	27.86	27.83	27.76	27.81	27.88	29.29	30.32	30.11	30.16	27.85	1.05	1.09	1.08	1.08	1.00
	27.86	27.83	27.76	27.81	27.88	30.72	29.38	31.85	29.22	26.65	1.10	1.06	1.15	1.05	0.96
Mid	92.87	92.84	92.89	92.91	92.87	96.74	102.13	104.27	103.96	91.75	1.04	1.10	1.12	1.12	0.99
	92.23	92.20	92.25	92.27	92.23	95.40	101.44	96.64	102.73	89.02	1.03	1.10	1.05	1.11	0.97
	92.23	92.20	92.25	92.27	92.23	97.09	102.63	98.80	104.93	90.84	1.05	1.11	1.07	1.14	0.98
	92.23	92.20	92.25	92.27	92.23	98.83	104.87	103.73	105.11	90.95	1.07	1.14	1.12	1.14	0.99
	92.23	92.20	92.25	92.27	92.23	96.78	100.45	99.61	101.80	91.32	1.05	1.09	1.08	1.10	0.99
	91.01	90.99	91.03	91.06	91.01	97.52	102.01	99.30	102.70	90.42	1.07	1.12	1.09	1.13	0.99
	91.01	90.99	91.03	91.06	91.01	97.60	101.78	98.58	102.69	89.65	1.07	1.12	1.08	1.13	0.99
	91.01	90.99	91.03	91.06	91.01	96.32	100.05	94.45	102.48	91.52	1.06	1.10	1.04	1.13	1.01
	91.01	90.99	91.03	91.06	91.01	99.68	105.65	108.04	104.54	93.53	1.10	1.16	1.19	1.15	1.03
High	248.93	248.78	248.14	248.53	249.08	266.66	279.51	264.46	291.91	248.18	1.07	1.12	1.07	1.17	1.00
	248.93	248.78	248.14	248.53	249.08	262.46	277.26	264.40	278.69	243.97	1.05	1.11	1.07	1.12	0.98
	248.93	248.78	248.14	248.53	249.08	273.43	286.62	273.00	292.01	252.36	1.10	1.15	1.10	1.17	1.01
	248.93	248.78	248.14	248.53	249.08	271.94	289.75	282.36	292.30	252.26	1.09	1.16	1.14	1.18	1.01
	245.73	245.58	244.95	245.34	245.88	275.05	290.57	289.08	293.00	252.08	1.12	1.18	1.18	1.19	1.03
	245.73	245.58	244.95	245.34	245.88	266.92	280.31	275.81	282.73	243.49	1.09	1.14	1.13	1.15	0.99
	245.73	245.58	244.95	245.34	245.88	260.84	272.15	271.73	273.55	236.20	1.06	1.11	1.11	1.11	0.96
	245.73	245.58	244.95	245.34	245.88	267.62	282.02	273.88	288.64	245.60	1.09	1.15	1.12	1.18	1.00
	247.62	247.47	246.83	247.22	247.77	267.36	277.35	266.38	287.20	245.43	1.08	1.12	1.08	1.16	0.99
High Ambient	107.85	107.79	107.51	107.68	107.92	109.73	119.63	114.98	128.64	102.22	1.02	1.11	1.07	1.19	0.95
	108.11	108.05	107.76	107.94	108.18	118.75	124.52	122.78	131.76	109.87	1.10	1.15	1.14	1.22	1.02
	108.11	108.05	107.76	107.94	108.18	114.50	125.23	116.98	127.72	107.74	1.06	1.16	1.09	1.18	1.00
	110.53	110.46	110.17	110.35	110.59	116.27	124.89	121.82	123.96	106.72	1.05	1.13	1.11	1.12	0.96
	110.53	110.46	110.17	110.35	110.59	117.46	127.80	123.13	126.67	108.88	1.06	1.16	1.12	1.15	0.98
									Flue Gas	**AVE**	**1.06**	**1.11**	**1.09**	**1.13**	**0.98**
										STDEV	**0.04**	**0.04**	**0.04**	**0.03**	**0.03**
										%RSD	**3.36**	**3.61**	**4.00**	**2.93**	**2.91**
									Ambient Air	**AVE**	**1.06**	**1.14**	**1.10**	**1.17**	**0.98**
										STDEV	**0.03**	**0.02**	**0.03**	**0.04**	**0.03**
										%RSD	**2.73**	**1.85**	**2.47**	**3.28**	**2.71**

Table 5. Results Assuming Saturation Downstream of Wet Scrubber

Conc. Level	QAG Aerosol Conc (μg/m³)					Background Corrected Xact Conc. (μg/m³)					Xact/QAG				
	Cr	As	Cd	Hg	Pb	Cr	As	Cd	Hg	Pb	Cr	As	Cd	Hg	Pb
Blank Spike	0	0	0	0	0	0	0.4	1.5	23.1	0.26	NA	NA	NA	NA	NA
	0	0	0	0	0	0	0	0.88	21.31	0.8	NA	NA	NA	NA	NA
	0	0	0	0	0	0	0.33	1.42	14.28	0	NA	NA	NA	NA	NA
	0	0	0	0	0	0	0	0	10.64	0.66	NA	NA	NA	NA	NA
	0	0	0	0	0	0	0.49	0	8.85	0.12	NA	NA	NA	NA	NA
	0	0	0	0	0	0	0.23	0	7.41	0.12	NA	NA	NA	NA	NA
	0	0	0	0	0	0	0.43	1.08	6.28	0.43	NA	NA	NA	NA	NA
Low	27.58	27.56	27.49	27.53	27.60	29.96	28.21	28.94	31.30	26.17	1.09	1.02	1.05	1.14	0.95
	27.58	27.56	27.49	27.53	27.60	27.71	28.43	29.86	32.11	26.36	1.00	1.03	1.09	1.17	0.96
	27.58	27.56	27.49	27.53	27.60	29.35	29.73	31.50	30.45	25.61	1.06	1.08	1.15	1.11	0.93
	27.58	27.56	27.49	27.53	27.60	31.19	30.32	28.48	30.88	26.50	1.13	1.10	1.04	1.12	0.96
	27.58	27.56	27.49	27.53	27.60	27.20	30.01	28.57	30.77	25.98	0.99	1.09	1.04	1.12	0.94
	27.86	27.83	27.76	27.81	27.88	27.28	28.45	29.01	30.68	28.30	0.98	1.02	1.04	1.10	1.02
	27.86	27.83	27.76	27.81	27.88	28.75	31.08	31.70	29.99	25.63	1.03	1.12	1.14	1.08	0.92
	27.86	27.83	27.76	27.81	27.88	28.94	30.97	28.70	31.31	28.29	1.04	1.11	1.03	1.13	1.01
	27.86	27.83	27.76	27.81	27.88	29.29	30.32	30.11	30.16	27.85	1.05	1.09	1.08	1.08	1.00
	27.86	27.83	27.76	27.81	27.88	30.72	29.38	31.85	29.22	26.65	1.10	1.06	1.15	1.05	0.96
Mid	92.87	92.84	92.89	92.91	92.87	96.74	102.13	104.27	103.96	91.75	1.04	1.10	1.12	1.12	0.99
	92.23	92.20	92.25	92.27	92.23	95.40	101.44	96.64	102.73	89.02	1.03	1.10	1.05	1.11	0.97
	92.23	92.20	92.25	92.27	92.23	97.09	102.63	98.80	104.93	90.84	1.05	1.11	1.07	1.14	0.98
	92.23	92.20	92.25	92.27	92.23	98.83	104.87	103.73	105.11	90.95	1.07	1.14	1.12	1.14	0.99
	92.23	92.20	92.25	92.27	92.23	96.78	100.45	99.61	101.80	91.32	1.05	1.09	1.08	1.10	0.99
	91.01	90.99	91.03	91.06	91.01	97.52	102.01	99.30	102.70	90.42	1.07	1.12	1.09	1.13	0.99
	91.01	90.99	91.03	91.06	91.01	97.60	101.78	98.58	102.69	89.65	1.07	1.12	1.08	1.13	0.99
	91.01	90.99	91.03	91.06	91.01	96.32	100.05	94.45	102.48	91.52	1.06	1.10	1.04	1.13	1.01
	91.01	90.99	91.03	91.06	91.01	99.68	105.65	108.04	104.54	93.53	1.10	1.16	1.19	1.15	1.03
High	248.93	248.78	248.14	248.53	249.08	266.66	279.51	264.46	291.91	248.18	1.07	1.12	1.07	1.17	1.00
	248.93	248.78	248.14	248.53	249.08	262.46	277.26	264.40	278.69	243.97	1.05	1.11	1.07	1.12	0.98
	248.93	248.78	248.14	248.53	249.08	273.43	286.62	273.00	292.01	252.36	1.10	1.15	1.10	1.17	1.01
	248.93	248.78	248.14	248.53	249.08	271.94	289.75	282.36	292.30	252.26	1.09	1.16	1.14	1.18	1.01
	245.73	245.58	244.95	245.34	245.88	275.05	290.57	289.08	293.00	252.08	1.12	1.18	1.18	1.19	1.03
	245.73	245.58	244.95	245.34	245.88	266.92	280.31	275.81	282.73	243.49	1.09	1.14	1.13	1.15	0.99
	245.73	245.58	244.95	245.34	245.88	260.84	272.15	271.73	273.55	236.20	1.06	1.11	1.11	1.11	0.96
	245.73	245.58	244.95	245.34	245.88	267.62	282.02	273.88	288.64	245.60	1.09	1.15	1.12	1.18	1.00
	247.62	247.47	246.83	247.22	247.77	267.36	277.35	266.38	287.20	245.43	1.08	1.12	1.08	1.16	0.99
High Ambient	107.85	107.79	107.51	107.68	107.92	109.73	119.63	114.98	128.64	102.22	1.02	1.11	1.07	1.19	0.95
	108.11	108.05	107.76	107.94	108.18	118.75	124.52	122.78	131.76	109.87	1.10	1.15	1.14	1.22	1.02
	108.11	108.05	107.76	107.94	108.18	114.50	125.23	116.98	127.72	107.74	1.06	1.16	1.09	1.18	1.00
	110.53	110.46	110.17	110.35	110.59	116.27	124.89	121.82	123.96	106.72	1.05	1.13	1.11	1.12	0.96
	110.53	110.46	110.17	110.35	110.59	117.46	127.80	123.13	126.67	108.88	1.06	1.16	1.12	1.15	0.98
									Flue Gas	**AVE**	**1.06**	**1.11**	**1.09**	**1.13**	**0.98**
										STDEV	**0.04**	**0.04**	**0.04**	**0.03**	**0.03**
										%RSD	**3.36**	**3.61**	**4.00**	**2.93**	**2.91**
									Ambient Air	**AVE**	**1.06**	**1.14**	**1.10**	**1.17**	**0.98**
										STDEV	**0.03**	**0.02**	**0.03**	**0.04**	**0.03**
										%RSD	**2.73**	**1.85**	**2.47**	**3.28**	**2.71**

4.0 References

1. Rosemount Inc, PO Box 70114, Chicago, IL 60673-0114
2. Sierra Instruments, 5 Harris Court Building L, Monterey, CA 93940
3. Micromatter Co., 18218 18th Ave. NW, Arlington, WA 98223
4. U.S. Environmental Protection Agency. 1999. Compendium Method IO-3.3 - Determination of Metals in Ambient Particulate Matter Using X-Ray Fluorescence (XRF) Spectroscopy. In *Compendium of Methods for the Determination of Inorganic Compounds in Ambient Air;* EPA/625/R-96/010a. U.S. Government Printing Office: Washington, DC.
5. Bios International Corporation, 10 Park Place, Butler, NJ 07405
6. Desiccants Global. Types of Desiccants. http:// desiccants.cn/products.htm (accessed August 2007).
7. Perry, R.H.; Green, D.W; Editors. 1984. Perry's Chemical Engineers' Handbook. 6th Ed. McGraw-Hill Book Company: New York.
8. Serre, S. February 27th, 2007. U.S. Environmental Protection Agency, ORD/National Risk Management Research Laboratory [Personal communication].
9. National Oceanic and Atmospheric Association (NOAA) Cooperative Institute for Regional Prediction. Real-Time Observation and Analysis Network (ROMAN). http://raws.wrh.noaa.gov/roman/index.html (accessed August 2007)

4.0 References

1. Rosemount Inc, PO Box 70114, Chicago, IL 60673-0114
2. Sierra Instruments, 5 Harris Court Building L, Monterey, CA 93940
3. Micromatter Co., 18218 18th Ave. NW, Arlington, WA 98223
4. U.S. Environmental Protection Agency. 1999. Compendium Method IO-3.3 - Determination of Metals in Ambient Particulate Matter Using X-Ray Fluorescence (XRF) Spectroscopy. In *Compendium of Methods for the Determination of Inorganic Compounds in Ambient Air;* EPA/625/R-96/010a. U.S. Government Printing Office: Washington, DC.
5. Bios International Corporation, 10 Park Place, Butler, NJ 07405
6. Desiccants Global. Types of Desiccants. http:// desiccants.cn/products.htm (accessed August 2007).
7. Perry, R.H.; Green, D.W; Editors. 1984. Perry's Chemical Engineers' Handbook. 6th Ed. McGraw-Hill Book Company: New York.
8. Serre, S. February 27th, 2007. U.S. Environmental Protection Agency, ORD/National Risk Management Research Laboratory [Personal communication].
9. National Oceanic and Atmospheric Association (NOAA) Cooperative Institute for Regional Prediction. Real-Time Observation and Analysis Network (ROMAN). http://raws.wrh.noaa.gov/roman/index.html (accessed August 2007)