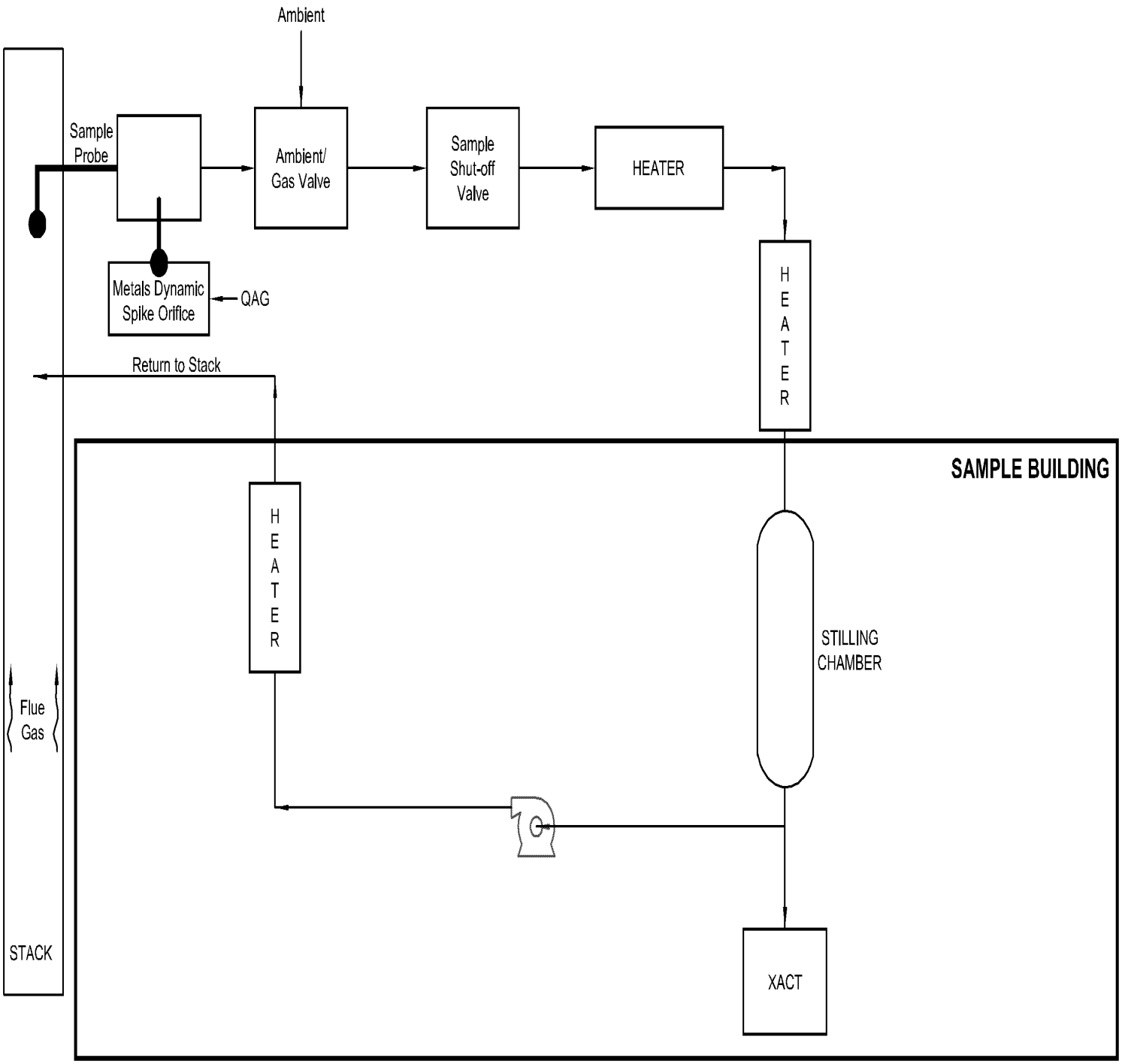

FIGURE 4. MULTI-METALS CEMS (XACT)

09/23/05	LILFIG4	020305

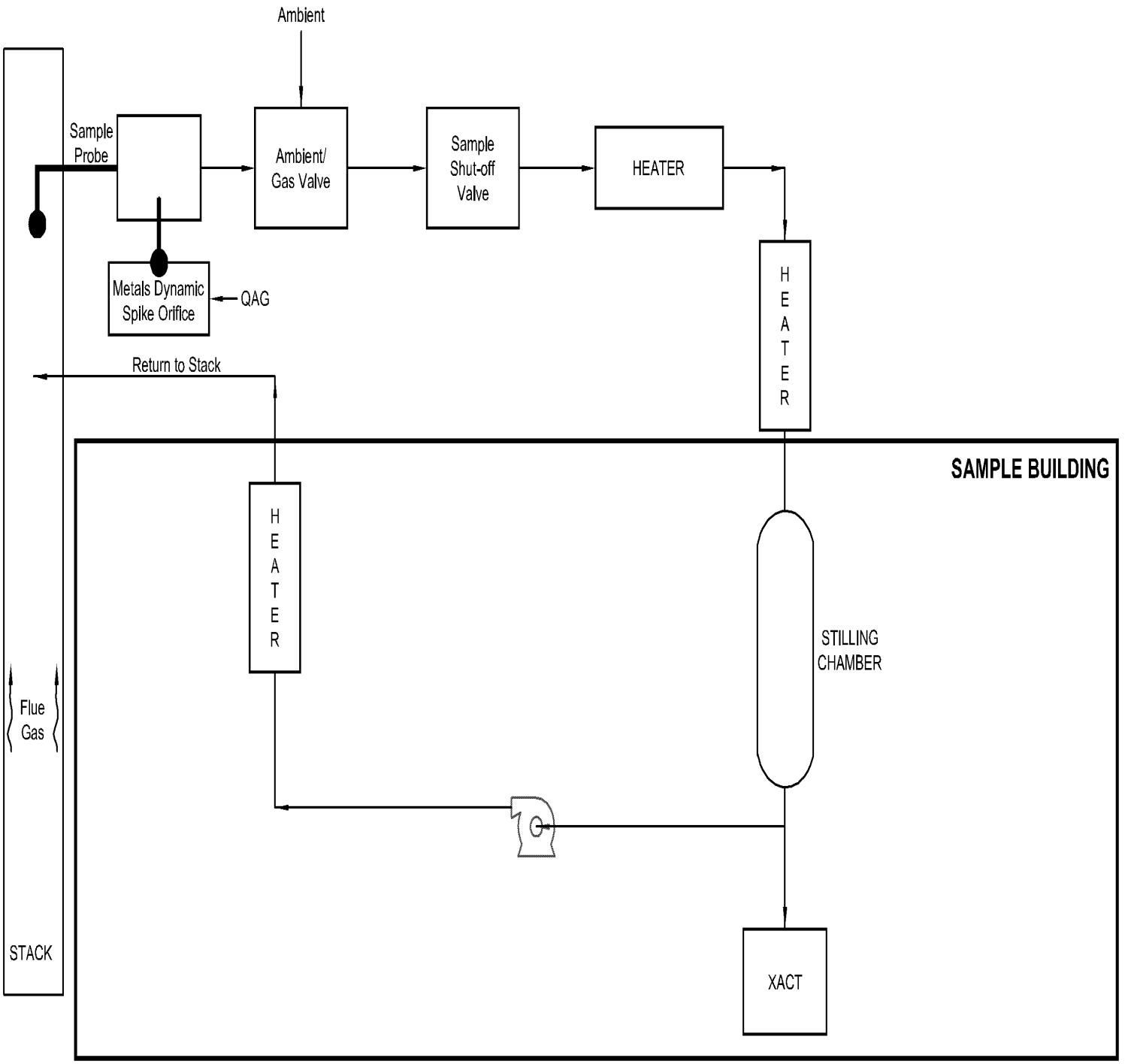

FIGURE 4. MULTI-METALS CEMS (XACT)

09/23/05	LILFIG4	020305