VEOLIA
ENVIRONMENTAL SERVICES

January 28, 2014
Via FedEx

RECEIVED
JAN 30 2014
ENFORCEMENT BRANCH
U.S. EPA REGION 5

Attn: Compliance Tracker, AE-17J
Air Enforcement and Compliance Assurance Branch
United States Environmental Protection Agency
Region 5
77 W. Jackson Blvd., AE-17J
Chicago, IL 60604

RE: Veolia ES Technical Solutions, L.L.C.
163121AAP
40 CFR Part 63 – Subpart EEE
National Emission Standards for Hazardous Air Pollutants from Hazardous Waste Combustors
Comprehensive Performance Test Reports and Notification of Compliance (NOC)

Compliance Tracker,

Pursuant to the requirements of 40 CFR 63.1200, subpart EEE, Veolia ES Technical Solutions, L.L.C., hereby submits the Performance Test Reports for Incinerators 2, 3 and 4 and the Notification of Compliance (NOC). The NOC documents compliance with the emission standards and continuous monitoring system requirements, and identifying operating parameters defined in 40 CFR 63.1209 and 63.1219. Veolia is now complying with all operating requirements specified in this NOC. The Performance Test Reports detail compliance with these standards.

I certify under penalty of law that this document and all attachments were prepared under my direction or supervision in accordance with a system designed to assure that qualified personnel properly gather and evaluate the information submitted. Based on my inquiry of the person or persons who manage the system, or those persons directly responsible for gathering the information, the information submitted, is to the best of my

#7 Mobile Avenue, Sauget, IL 62201
(618) 271-2804
www.veoliaes.com

VEOLIA
ENVIRONMENTAL SERVICES

knowledge and belief, true, accurate, and complete. I am aware that there are significant penalties for submitting false information, including the possibility of fine and imprisonment for knowing violations.

Upon review of this submittal, should the Agency have a need for additional information or questions, please contact Dennis Warchol at (618) 271-2804 or via e-mail at dennis.warchol@veolia.com or me at (618) 271-2804 or via e-mail at doug.harris@veolia.com.

Sincerely,
Veolia ES Technical Solutions, L.L.C.

Doug Harris
General Manager

Att.

cc: Mr. George Czerniak, Director, Air and Radiation Division
USEPA File

#7 Mobile Avenue, Sauget, IL 62201
(618) 271-2804
www.veoliaes.com

R5-2014-0104710000525

URS

RECEIVED
JAN 30 2014
AIR ENFORCEMENT BRANCH
U.S. EPA REGION 5

40 CFR §63 Subpart EEE

Comprehensive Performance Test Report for Fixed Hearth Incinerator – Unit 2 Fixed Hearth Incinerator – Unit 3 Rotary Kiln Incinerator – Unit 4

Prepared for:

Veolia ES Technical Solutions, L.L.C.
7 Mobile Avenue
Sauget, IL 62201

Prepared by:

URS Corporation
9400 Amberglen Blvd.
Austin, TX 78729

January 28, 2014

URS Corporation
9400 Amberglen Boulevard
Austin, TX 78729
P.O. Box 201088
Austin, TX 78720-1088
Tel: 512.454.4797
Fax: 512.454.8807
www.urscorp.com

Table of Contents

Page

1.0 Introduction 1-1
1.1 Incinerator Overview 1-2
1.2 Test Objectives 1-3
1.3 Test Protocol Summary 1-4
1.4 CPT Schedule 1-9
1.5 Summary of Results 1-10
1.6 Report Organization 1-10

2.0 Process Operations 2-1
2.1 Process Overview 2-1
2.2 Process Operating Data and Waste Feedrates 2-6
2.2.1 Unit 2 2-6
2.2.2 Unit 3 2-6
2.2.3 Unit 4 2-7
2.3 Spiking of Metals and Chlorine 2-7

3.0 Sampling, Analysis, and Monitoring Procedures 3-1
3.1 Sampling Locations and Procedures 3-1
3.1.1 Liquids Sampling Procedures 3-1
3.1.2 Solids Sampling Procedures 3-6
3.1.3 Stack Gas Sampling Procedures 3-6
3.1.3.1 Sample Port Locations 3-10
3.1.3.2 EPA Methods 2 and 4 (Flowrate and Moisture) 3-10
3.1.3.3 EPA Method 5 (PM) 3-10
3.1.3.4 Modified EPA Method 26A (HCl/Cl_2) 3-11
3.1.3.5 EPA Method 29 (Metals) 3-11
3.1.3.6 SW-846 Method 0023A (Dioxins/Furans) 3-12
3.1.3.7 Continuous Emissions Monitoring (THC, CO_2, CO and O_2) 3-13
3.2 Analysis Procedures 3-13
3.2.1 Composition and Physical Parameters Analysis 3-14
3.2.2 Metals Analysis 3-14
3.2.3 PM Analysis 3-14
3.2.4 HCl/Cl_2 Analysis 3-14
3.2.5 Dioxins/Furans Analysis 3-15
3.3 Process Monitoring Procedures 3-15

Table of Contents (continued)

Page

4.0 Results 4-1
4.1 Waste Feedstreams 4-1
4.2 Stack Gas 4-18
4.2.1 PM in Stack Gas 4-18
4.2.2 HCl/Cl_2 in Stack Gas 4-22
4.2.3 Metals in Stack Gas 4-26
4.2.4 Dioxins/Furans in Stack Gas 4-34
4.2.5 THC in Stack Gas 4-39
4.3 Chlorine, Ash, and Metals Feedrates 4-41
4.3.1 Chlorine Feedrates 4-41
4.3.2 Ash Feedrates 4-41
4.3.3 Metals Feedrates 4-48

5.0 Quality Assurance/Quality Control 5-1
5.1 Audit Samples 5-2
5.2 Analysis of Waste Feeds 5-2
5.2.1 Analysis of Waste Feeds for Metals 5-2
5.2.2 Analysis of Waste Feeds for Physical and Chemical Parameters 5-4
5.3 Stack Gas 5-5
5.3.1 Isokinetic Sample Collection 5-5
5.3.2 Analysis of Stack Gas Samples for Determination of PM 5-6
5.3.3 Analysis of Stack Gas Samples for Determination of HCl/Cl_2 5-6
5.3.4 Analysis of Stack Gas Samples for Determination of Metals 5-7
5.3.5 Analysis of Stack Gas Samples for Determination of Dioxins/Furans 5-8
5.3.6 Monitoring of Stack Gas for O_2, CO_2, and THC 5-9
5.4 Process Data 5-9
5.5 Spiking 5-10

List of Appendices

APPENDIX A – CEMS RATA Reports

APPENDIX B – Spiking Report

APPENDIX C – Process Operating Data

APPENDIX D – CMS Performance Evaluation Test Report

APPENDIX E – Chains-of-Custody/Field Logbook

APPENDIX F – Sampling Documentation

APPENDIX G – Analytical Data Reports

- **APPENDIX G1** - Laboratory Reports – Analysis of Liquid and Solid Waste Feed Samples for Metals, Total Chlorine, Ash, and Physical Parameters
- **APPENDIX G2**- Laboratory Reports – Analysis of Stack Samples for Dioxins/Furans
- **APPENDIX G3** - Laboratory Reports – Analysis of Stack Samples for Metals
- **APPENDIX G4** - Laboratory Reports – Analysis of Stack Samples for Particulate Matter, Hydrogen Chloride, and Chlorine
- **APPENDIX G5** - Laboratory Reports – Analysis of Spike Materials
- **APPENDIX G6** - Audit Report

APPENDIX H – Data Quality Assessments

APPENDIX I – Sampling Equipment/Instrumentation Calibration Documentation

List of Tables

Page

1-1 Applicable HWC MACT Emission Standards 1-3
1-2 Data Used To Establish OPLs 1-8

1-3 Unit 2 Compliance Summary 1-11
1-4 Unit 3 Compliance Summary 1-12
1-5 Unit 4 Compliance Summary 1-13

2-1 Unit 2 – Summary of Process Data and Feedrates During the EPA Method 5 Stack Sampling for PM 2-8
2-2 Unit 2 – Summary of Process Data and Feedrates During the Modified EPA Method 26A Stack Sampling for HCl/Cl_2 2-9
2-3 Unit 2 – Summary of Process Data and Feedrates During the EPA Method 29 Stack Sampling for Metals 2-10
2-4 Unit 2 – Summary of Process Data and Feedrates During the SW-846 Method00 23A Stack Sampling for Dioxins/Furans 2-11

2-5 Unit 3 – Summary of Process Data and Feedrates During the EPA Method 5 Stack Sampling for PM 2-12
2-6 Unit 3 – Summary of Process Data and Feedrates During the Modified EPA Method 26A Stack Sampling for HCl/Cl_2 2-13
2-7 Unit 3 – Summary of Process Data and Feedrates During the EPA Method 29 Stack Sampling for Metals 2-14
2-8 Unit 3 – Summary of Process Data and Feedrates During the SW-846 Method 0023A Stack Sampling for Dioxins/Furans 2-15

2-9 Unit 4 – Summary of Process Data and Feedrates During the EPA Method 5 Stack Sampling for PM 2-16
2-10 Unit 4 – Summary of Process Data and Feedrates During the Modified EPA Method 26A Stack Sampling for HCl/Cl_2 2-17
2-11 Unit 4 – Summary of Process Data and Feedrates During the EPA Method 29 Stack Sampling for Metals 2-18
2-12 Unit 4 – Summary of Process Data and Feedrates During the SW-846 Method 0023A Stack Sampling for Dioxins/Furans 2-19

2-13 Unit 2 – Chlorine Spiking Rates During the HCl/HCl_2 Stack Sampling 2-20
2-14 Unit 3 – Chlorine Spiking Rates During the HCl/HCl_2 Stack Sampling 2-20
2-15 Unit 4 – Chlorine Spiking Rates During the HCl/HCl_2 Stack Sampling 2-20

2-16 Unit 2 – Spiking Rates During the Metals Stack Sampling 2-21
2-17 Unit 3 – Spiking Rates During the Metals Stack Sampling 2-21
2-18 Unit 4 – Spiking Rates During the Metals Stack Sampling 2-21

List of Tables (continued)

Page

2-19 Unit 2 – Analytical Results for the Chromium Spiking Solution 2-22
2-20 Unit 2 – Analytical Results for the Mercury Spiking Solution 2-22

2-21 Unit 3 – Analytical Results for the Chromium Spiking Solution 2-23
2-22 Unit 3 – Analytical Results for the Mercury Spiking Solution 2-23

2-23 Unit 4 – Analytical Results for the Chromium Spiking Solution 2-24
2-24 Unit 4 – Analytical Results for the Mercury Spiking Solution 2-24

3-1 Measurement Frequency 3-3
3-2 Sampling Methods 3-4

3-3 Unit 2 – Summary of Isokinetic Sampling 3-7
3-4 Unit 3 – Summary of Isokinetic Sampling 3-8
3-5 Unit 4 – Summary of Isokinetic Sampling 3-9

3-6 Summary of Analytical Methods 3-13

4-1 Unit 2 – Analytical Results for Chlorine, Ash, Metals, and Physical Parameters in the Low-Btu Liquid Waste Feed 4-5
4-2 Unit 2 – Analytical Results for Chlorine, Ash, Metals, and Physical Parameters in the High-Btu Liquid Waste Feed 4-6
4-3 Unit 2 – Analytical Results for Chlorine, Ash, Metals and Physical Parameters in the Specialty Liquid Waste Feed 4-7
4-4 Unit 2 – Analytical Results for Chlorine, Ash, Metals and Physical Parameters in the Containerized Solids Waste Feed 4-8

4-5 Unit 3 – Analytical Results for Chlorine, Ash, Metals, and Physical Parameters in the Low-Btu Liquid Waste Feed 4-9
4-6 Unit 3 – Analytical Results for Chlorine, Ash, Metals, and Physical Parameters in the High-Btu Liquid Waste Feed 4-10
4-7 Unit 3 – Analytical Results for Chlorine, Ash, Metals and Physical Parameters in the Specialty Liquid Waste Feed 4-11
4-8 Unit 3 – Analytical Results for Chlorine, Ash, Metals and Physical Parameters in the Containerized Solids Waste Feed 4-12

List of Tables (continued)

Page

4-9 Unit 4 – Analytical Results for Chlorine, Ash, Metals, and Physical Parameters in the Low-Btu Liquid Waste Feed to the Kiln 4-13
4-10 Unit 4 – Analytical Results for Chlorine, Ash, Metals, and Physical Parameters in the High-Btu Liquid Waste Feed to the Kiln 4-14
4-11 Unit 4 – Analytical Results for Chlorine, Ash, Metals and Physical Parameters in the Liquid Waste Feed to the SCC 4-15
4-12 Unit 4 – Analytical Results for Chlorine, Ash, Metals and Physical Parameters in the Containerized Solids Waste Feed 4-16
4-13 Unit 4 – Analytical Results for Chlorine, Ash, Metals and Physical Parameters in the Bulk Solids Waste Feed 4-17

4-14 Unit 2 – Results of PM in Stack Gas 4-19
4-15 Unit 3 – Results of PM in Stack Gas 4-21
4-16 Unit 4 – Results of PM in Stack Gas 4-22

4-17 Unit 2 – Results of HCl/Cl_2 in Stack Gas 4-23
4-18 Unit 3 – Results of HCl/Cl_2 in Stack Gas 4-25
4-19 Unit 4 – Results of HCl/Cl_2 in Stack Gas 4-25

4-20 Unit 2 – Analytical Results of Metals in Stack Gas 4-27
4-21 Unit 2 – Results of Metals in Stack Gas 4-28

4-22 Unit 3 – Analytical Results of Metals in Stack Gas 4-29
4-23 Unit 3 – Results of Metals in Stack Gas 4-30

4-24 Unit 4 – Analytical Results of Metals in Stack Gas 4-32
4-25 Unit 4 – Results of Metals in Stack Gas 4-33

4-26 Unit 2 – Results of Dioxins/Furans in Stack Gas 4-35
4-27 Unit 3 – Results of Dioxins/Furans in Stack Gas 4-37
4-28 Unit 4 – Results of Dioxins/Furans in Stack Gas 4-38

4-29 Unit 2 – Results of THC in Stack Gas 4-39
4-30 Unit 3 – Results of TCH in Stack Gas 4-40
4-31 Unit 4 – Results of THC in Stack Gas 4-40

4-32 Unit 2 – Chlorine Feedrate 3-42
4-33 Unit 3 – Chlorine Feedrate 3-43
4-34 Unit 4 – Chlorine Feedrate 3-44

List of Tables (continued)

Page

4-35 Unit 2 – Ash Feedrate During the EPA Method 5 Stack Sampling for PM 4-45
4-36 Unit 3 – Ash Feedrate During the EPA Method 5 Stack Sampling for PM 4-46
4-37 Unit 4 – Ash Feedrate During the EPA Method 5 Stack Sampling for PM 4-47

4-38 Unit 2 – Metals Feedrate 4-49
4-39 Unit 2 – HWC MACT Metals Feedrate 4-51

4-40 Unit 3 – Metals Feedrate 4-52
4-41 Unit 3 – HWC MACT Metals Feedrate 4-53

4-42 Unit 4 – Metals Feedrate 4-54
4-43 Unit 4 – HWC MACT Metals Feedrate 4-56

5-1 Results of Analysis of Audit Samples 5-2

List of Figures

Page

2-1 Unit 2 Process Flow Diagram 2-3
2-2 Unit 3 Process Flow Diagram 2-4
2-3 Unit 4 Process Flow Diagram 2-5

1.0 Introduction

Veolia ES Technical Solutions, L.L.C. (Veolia) operates three incinerators at its Sauget, Illinois facility. Two of the incinerators are fixed hearth units (Units 2 and 3), and the third incinerator is a rotary kiln unit (Unit 4). All of the incinerators treat certain wastes that are classified as hazardous under state and/or federal regulations, and are subject to the National Emission Standards for Hazardous Air Pollutants (NESHAPs) for Hazardous Waste Combustors (Title 40 of the Code of Federal Regulations, Part 63 [40 CFR Part 63], Subpart EEE), (i.e., the HWC MACT).

In August and September of 2008, Veolia conducted tests of Units 2, 3, and 4 required by the information collection requests from U.S. EPA Region 5 dated June 5, 2008 and September 12, 2008. Those tests began on August 11, 2008 for Unit 2, August 5, 2008 for Unit 3, and August 21, 2008 for Unit 4 following test plans approved by U.S. EPA Region 5. Initial Comprehensive Performance Tests (CPTs) of Units 2, 3, and 4 commenced on December 8, 2009 for Unit 2; on December 1, 2009 for Unit 3; and on December 16, 2009 for Unit 4, and were performed in accordance with Comprehensive Performance Test Plans approved by U.S. EPA Region 5.The HWC MACT, at 40 CFR § 63.1207(d), states *"The date of commencement of the initial comprehensive performance test is the basis for establishing the deadline to commence the initial confirmatory performance test and the next comprehensive performance test. You may conduct performance testing at any time prior to the required date. The deadline for commencing subsequent confirmatory and comprehensive performance testing is based on the date of commencement of the previous comprehensive performance test."* EPA Region 5 considers that the start of the subsequent CPTs be based on the initiation of the metals tests performed in 2008, requiring that the subsequent CPT be started by September 5, 2013, and that a site-specific test plan be submitted before this date. Veolia originally submitted to EPA its notification of intent and site-specific test plans (i.e., comprehensive performance test plans) for all three units and a Quality Assurance Project Plan (QAPjP) for the subsequent CPT on September 5, 2012. Revisions to the CPT Plans and QAPjP were made based on negotiations with EPA Region 5. The CPT Plan and QAPjP dated September 25, 2013 were approved by EPA Region 5.

EPA Region 5 considers that testing of the three incinerators comprises the CPT for Veolia's facility in Sauget. Veolia Sauget started the CPT of the three incinerators at the Sauget facility on September 4, 2013 with the performance of the RATA of the CO and O_2 continuous monitoring systems (CEMS) of Unit 4. The RATA of the CO and O_2 CEMS of Unit 3 was performed on September 5, 2013, and the RATA of the CO and O_2 CEMS of Unit 2 was performed on September 6, 2013. Testing for the applicable parameters of the HWC MACT including dioxins/furans, total hydrocarbons (THC), carbon monoxide (CO), particulate matter

(PM), hydrogen chloride/chlorine gas (HCl/Cl_2), mercury, SVM, and LVM was completed on October 30, 2012. In accordance with 40 CFR §63.1207(j)(1)(i) and §63.1207(j)(3), the Notification of Compliance (NOC) and CPT Report are being filed within 90 days of completion of the CPT.

Per 40 CFR §63.1206(b)(7)(i)(A), compliance with the DRE standard is required to be demonstrated only one time, and Veolia Sauget demonstrated DRE during RCRA Trial Burns of Units 2, 3, and 4 performed in January 1993, November 1996, and December 1995, respectively. The HWC MACT requires that DRE only be demonstrated one time as long as "you do not feed hazardous waste at a location in the combustion system other than the normal flame zone" (§63.1207(c)(2)(iv)). Veolia did not re-demonstrate DRE in the subsequent CPT. DRE, and the associated OPLs, were demonstrated during the January 1993, November 1996, and December 1995 RCRA Trial Burns, respectively for Units 2, 3, and 4, and operations of the incinerators have not significantly changed since that test.

This test (i.e., the subsequent CPT) demonstrated applicable emission standards and established OPLs as required by the HWC MACT for dioxins/furans, THC, CO, PM, HCl/Cl_2, mercury, SVM, and LVM. The results of this are used to revise the NOC for the three incinerators.

1.1 Incinerator Overview

Units 2 and 3 are identical fixed hearth incineration systems with primary and secondary combustion chambers that treat solid wastes as well as aqueous and organic liquids. The processes are monitored and controlled by individual distributed control systems (DCS) capable of continuously monitoring the processes to assure all operational parameters are within regulatory and permit limits while waste is being fed to the unit. In addition, Units 2 and 3 are equipped with a Continuous Emissions Monitoring System (CEMS) that continuously samples the exhaust gases for carbon monoxide and oxygen in the stack gas exhaust stream.

Unit 4 is a rotary kiln incineration system with primary and secondary combustion chambers that treats solid wastes as well as aqueous and organic liquids. The process is monitored and controlled by a DCS capable of continuously monitoring the process to assure all operational parameters are within regulatory and permit limits while waste is being fed to the unit. In addition, this incinerator is equipped with a CEMS that continuously samples the exhaust gases for carbon monoxide and oxygen in the stack gas exhaust stream.

1.2 Test Objectives

This subsequent CPT for the Final Replacement Standards of the HWC MACT was designed and conducted to demonstrate compliance with the standards and associated OPLs of the HWC MACT for existing incinerators at §63.1219. The CPT:

- Demonstrated that the incinerators meet the applicable HWC MACT emission limits while treating hazardous waste; and
- Re-established operating parameter limits (OPLs) on key operating variables that will ensure that the incinerator operates within the HWC MACT emission limits while treating hazardous waste.

The test program included feeding liquid and solid waste materials to the incinerators, sampling and analyzing the feedstreams, spiking waste feedstreams with metals and chlorine, monitoring certain process parameters, conducting emissions testing, and sampling of waste streams and spiking materials. Applicable emissions standards under the HWC MACT regulations demonstrated during the CPT are summarized in Table 1-1.

Table 1-1. Applicable HWC MACT Emission Standards

Emissions Parameter	Limit	Citation
Dioxins/Furans (TEQ basis)	≤ 0.20 ng/dscm – Units 2 & 3 ≤ 0.40 ng/dscm – Unit 4	40 CFR 63.1219(a)(1)(i)(A) 40 CFR 63.1219(a)(1)(i)(B)
Mercury	≤ 130 µg/dscm	40 CFR § 63.1219(a)(2)
Semivolatile Metals (SVM) (Cadmium and Lead)	≤ 230 µg/dscm	40 CFR § 63.1219(a)(3)
Low Volatile Metals (LVM) (Arsenic, Beryllium and Chromium)	≤ 92 µg/dscm	40 CFR § 63.1219(a)(4)
Carbon Monoxide (CO)	≤ 100 ppmv, dry	40 CFR § 63.1219(a)(5)(i)
Total Hydrocarbons (THC)	≤ 10 ppmv, dry	40 CFR § 63.1219(a)(5)(ii)
Hydrogen Chloride & Chlorine (HCl/Cl_2)	≤ 32 ppmv dry, as Cl^-	40 CFR § 63.1219(a)(6)
Particulate Matter (PM)	≤ 0.013 gr/dscf	40 CFR § 63.1219(a)(7)
Destruction and Removal Efficiency (DRE)	≥ 99.99 %	40 CFR § 63.1219(c)(1)

Note: All emission concentrations are corrected to 7% oxygen.

The objectives for the subsequent CPT for the Final Replacement Standards of the HWC MACT for each of the three incinerators were to:

- Demonstrate compliance with stack gas emissions less than or equal to the following limits, corrected to 7% O_2:
  - — Carbon Monoxide: 100 ppmv, dry;
  - — Total Hydrocarbons: 10 ppmv, dry;
  - — Dioxins/Furans: 0.20 ng TEQ/dscm for Units 2 and 3, and 0.40 ng TEQ/dscm for Unit 4;
  - — Particulate Matter (PM): 0.013 grains/dscf;
  - — Mercury: 130 µg/dscm;
  - — Semivolatile Metals (SVM) (Cd and Pb combined): 230 µg /dscm;
  - — Low Volatility Metals (LVM) (As, Be and Cr combined): 92 µg /dscm; and
  - — Hydrogen Chloride/Chlorine (HCl/Cl_2): 32 ppmv as Cl^- equivalent, dry.
- Compliance with the DRE standard (99.99% DRE) is demonstrated using data from previous RCRA trial burns.
- Establish limits for operating parameters.
- Conduct a Continuous Monitoring System (CMS) performance evaluation test.
- Conduct a Relative Accuracy Test Audit (RATA) for the CO and O_2 Continuous Emissions Monitoring Systems (CEMS.

1.3 Test Protocol Summary

A definition of the applicable emission limits and the resulting operating parameter limits (OPLs) are given in Section 4.0 of the CPT plans for each incinerator. The subsequent CPT of each of the incinerators included one test condition, and the test condition included one mode of operation. One set of OPLs was developed for each incinerator.

In the first part of the test for each incinerator, Veolia demonstrated compliance with the particulate matter standard of the HWC MACT while the plant was operated to establish the maximum ash feedrate and maximum combustion gas flowrate OPLs as required by the HWC MACT for the particulate matter standard. Compliance with the standard for carbon monoxide was also demonstrated during this portion of the test.

In the second part of the test for each incinerator, Veolia demonstrated compliance, and developed OPLs, with the HCl/Cl_2, dioxins/furans, THC, CO, LVM, SVM, and mercury standards of the HWC MACT while the plant was operated to establish maximum total hazardous waste feedrate, maximum pumpable hazardous waste feedrate, minimum primary combustion chamber (PCC) temperature, minimum secondary combustion chamber (SCC) temperature, maximum LVM, SVM, and Hg feedrates, maximum chlorine feedrate, maximum

combustion gas flowrate, and maximum inlet temperature to the baghouse. Ash was fed to the incinerators at normal (or higher) levels during this portion of the test. Compliance with the standard for carbon monoxide was also demonstrated during this test

Samples of the wastes fed during the tests were sampled every 15 minutes and composited for analysis. Waste feed samples were collected in coordination with the PM, HCl/Cl_2, metals, and dioxins/furans stack testing. Composite liquid waste feed samples associated with each of the four sampling trains were analyzed for ash, total chlorine, heat content, moisture, density, and viscosity. The composite liquid waste feed samples collected during the Method 29 stack sampling from the second part of the test were also analyzed for metals (arsenic, beryllium, chromium, cadmium, lead, and mercury). All of the composite solid waste feed samples, containerized and bulk, from the first and second parts of the test were analyzed for total chlorine, ash, moisture, and heat content. The composite containerized waste feed samples for Units 2, 3, and 4, and bulk solid waste feed samples from Unit 4, collected during the Method 29 stack sampling from the second part of the test were also analyzed for metals (arsenic, beryllium, chromium, cadmium, lead, and mercury).

The incinerators were operated for 30 minutes at the desired feedrates and operating conditions before sampling began for a given condition of the testing to assure all operating parameters were stabilized at the desired settings to achieve steady state. Spiking with chromium, lead, mercury, and chlorine was initiated at least 30 minutes before beginning sampling in the second part of each test run for HCl/Cl_2, metals, and dioxins/furans to assure that feedrates of spiking materials had stabilized before sampling began. Spiking of the waste feed with chromium, lead, mercury, and chlorine continued through the completion of the stack sampling for dioxins/furans, the last sampling to be completed.

Chlorine and the metals lead, chromium and mercury were spiked into each of the three incinerators during, and throughout, the second part of each test run. The LVM category for incinerators includes arsenic, beryllium and chromium. Chromium was spiked as a solution of chromic acid into the PCC of the respective incinerators. The SVM category for incinerators includes cadmium and lead. Lead was spiked as solid lead nitrate fed to the incinerators in pre-measured plastic baggies at regular intervals with the containerized solid waste. Mercury is the only high volatility metal of the HWC MACT. Mercury was spiked as a mercuric nitrate solution, and was fed in vials fed to the incinerator at regular intervals with the containerized solid waste. The concentration of the solution of mercuric nitrate was different (higher) for Unit 4 than for Units 2 and 3. One vial containing 10 mLs of the mercuric nitrate solution was fed per charge of the containerized solid waste to Units 2 and 3, and one vial containing 20 mLs were fed with each charge of the containerized solid wastes to Unit 4.

40 CFR §63.1207(g)(1)(A) requires feeding normal (or higher) levels of chlorine during the test for dioxins/furans. Chlorine was spiked the second part of the test and throughout the dioxins/furans testing to provide a consistent feedrate of chlorine throughout the dioxins/furans

sampling. The average feedrate of chlorine for Unit 2 from December 2012 through May 2013 was 35 lb/hr; the average feedrate of chlorine for Unit 3 from December 2012 through May 2013 was 31 lb/hr; and the average feedrate of chlorine for Unit 4 from December 2012 through May 2013 was 82 lb/hr. The spiking rate of chlorine was about 200 lbs/hr for all three incinerators.

Pursuant to 40 CFR §63.1209(m)(3), Veolia is establishing a maximum ash feedrate during the CPT for each of the three incinerators, developed in association with the sampling of the stack gas for particulate matter. The desired ash feedrate was achieved as the ash fed to the incinerator with the wastes, primarily solid wastes. The requirement in 40 CFR §63.1207 (g) (1)(B) for feeding normal (or higher) levels of ash during the SVM and LVM performance tests was achieved by the feeding of solid wastes. The average solids feedrate of ash in the first part of the test was 503.0 lbs/hr for Unit 2, 525.8 lbs/hr for Unit 3, and 4,777.2 lbs/hr for Unit 4. The feeding of solid wastes continued throughout the second part of the test at rates similar to those in the first part of the test. The average feedrate of ash for Unit 2 from December 2012 through May 2013 was 102 lb/hr; the average feedrate of ash for Unit 3 from December 2012 through May 2013 was 109 lb/hr; and the average feedrate of ash for Unit 4 from December 2012 through May 2013 was 949 lb/hr.

40 CFR 63.1207(g)(1)(i)(C) requires that tests for PM, SVM, LVM, mercury, and dioxins/furans include a normal cleaning cycle of the PM control device. For each of the three units, the baghouse is the unit of the air pollution control train that is designed and operated to control particulate matter. Testing in all three runs for PM, SVM, LVM, mercury, and dioxins/furans was performed including a cleaning cycle of the fabric filter (i.e., baghouse).

Per 40 CFR §63.1206(b)(7)(i)(A) compliance with the DRE standard is required to be demonstrated only one time and Veolia demonstrated DRE for each of the three incinerators in RCRA trial burns. The RCRA trial burn for Unit 2 was conducted in January 1993, and the RCRA trial burn for Unit 3 was conducted in November 1996. The RCRA trial burn for Unit 4 was conducted in December 1995. Veolia did not re-demonstrate DRE in the subsequent CPT for the Final Replacement Standards of the HWC MACT because DRE, and the associated OPLs, were demonstrated during the RCRA trial burns, and operations of the incinerators have not significantly changed since those tests. The operating limits associated with the standard for DRE for Unit 2 are:

- Maximum Total Pumpable Waste Feedrate 3,107 lb/hr;
- Maximum Total Waste Feedrate 4,017 lb/hr;
- Minimum Stack Gas Flowrate 15,605 acfm;
- Minimum Temperature in the Primary Combustion Chamber 1,658°F; and
- Minimum Temperature in the Secondary Combustion Chamber 1,848°F.

The operating limits associated with the standard for DRE for Unit 3 are:

- Maximum Total Pumpable Waste Feedrate 4,045 lb/hr;
- Maximum Total Waste Feedrate 5,098 lb/hr;
- Minimum Stack Gas Flowrate 16,061 acfm;
- Minimum Temperature in the Primary Combustion Chamber 1,627°F; and
- Minimum Temperature in the Secondary Combustion Chamber 1,845°F.

The operating limits associated with the standard for DRE for Unit 4 are:

- Maximum Total Pumpable Waste Feedrate to the Kiln 3,312 lb/hr;
- Maximum Total Pumpable Waste Feedrate to the SCC 1,788 lb/hr;
- Maximum Total Waste Feedrate to the Kiln 18,667 lb/hr;
- Maximum Total Waste Feedrate to the SCC 1,788 lb/hr;
- Minimum Stack Gas Flowrate 44,900 acfm;
- Minimum Temperature in the Primary Combustion Chamber 1,415°F; and
- Minimum Temperature in the Secondary Combustion Chamber 1,798°F.

The OPLs associated with each of the applicable emission standards (i.e., PM, HCl/Cl_2 gas, metals, and dioxins/furans) were developed using process data taken during the collection of the applicable sampling train (i.e., EPA Method 5 for particulate matter, Modified EPA Method 26A for HCl/Cl_2, EPA Method 29 for metals, and SW-846 Method 0023A for dioxins/furans). Operating parameter data were used as shown in Table 1-2 to develop HWC MACT OPLs.

THC is typically monitored in CPTs during the measurement of DRE. The OPLs for THC (i.e., minimum combustion chamber temperature in the primary combustion chamber, minimum combustion chamber temperature in the secondary combustion chamber, maximum flue gas flowrate, maximum pumpable hazardous waste feedrate, and maximum total waste feedrate) are the same as the OPLs for DRE and dioxins/furans. Even though DRE was not demonstrated, THC was measured during the second part of each test run of the CPT for each unit.

Table 1-2. Data Used to Establish OPLs

Demonstrated OPLs	Emission Standard	OPLs Developed During the CPT		
		Unit 2	Unit 3	Unit 4
Maximum Pumpable Waste Feedrate	DRE	1993	1996	1995
	THC	✓	✓	✓
	Dioxins/Furans	✓	✓	✓
Maximum Total Waste Feedrate	DRE	1993	1996	1995
	THC	✓	✓	✓
	Dioxins/Furans	✓	✓	✓
Maximum Stack Gas Flowrate	SVM	✓	✓	✓
	LVM	✓	✓	✓
	PM	✓	✓	✓
	HCl/Cl_2	✓	✓	✓
	DRE	1993	1996	1995
	THC	✓	✓	✓
	Dioxins/Furans	✓	✓	✓
Minimum Combustion Chamber Temperature in the PCC	DRE	1993	1996	1995
	THC	✓	✓	✓
	Dioxins/Furans	✓	✓	✓
Minimum Combustion Chamber Temperature in the SCC	DRE	1993	1996	1995
	THC	✓	✓	✓
	Dioxins/Furans	✓	✓	✓
Maximum Total Feedrate of LVM (As, Be, Cr)	LVM	✓	✓	✓
Maximum Pumpable Feedrate of LVM (As, Be, Cr)	LVM	✓	✓	✓
Maximum Feedrate of SVM (Pb, Cd)	SVM	✓	✓	✓
Maximum Feedrate of Mercury (Hg)	Hg	✓	✓	✓
Maximum Feedrate of Ash	PM	✓	✓	✓
Maximum Feedrate of Total Chlorine/Chloride	HCl/Cl_2	✓	✓	✓
	LVM	✓	✓	✓
	SVM	✓	✓	✓
Maximum Baghouse Inlet Temperature	THC	✓	✓	✓
	Dioxins/Furans	✓	✓	✓
	LVM	✓	✓	✓
	SVM	✓	✓	✓
Minimum Carbon Feedrate	Dioxins/Furans	NA	NA	✓
	Hg	NA	NA	✓
Minimum Sorbent Feedrate	HCl/Cl_2	✓	✓	✓
Minimum Carrier Fluid Flowrate	HCl/Cl_2	✓	✓	✓

1993 – Operating data from the January 1993 RCRA Trial Burn for Unit 2.

1996 – Operating data from the November 1996 RCRA Trial Burn for Unit 3.

1995 – Operating data from the December 1995 RCRA Trial Burn for Unit 4.

1.4 CPT Schedule

The subsequent CPT of the three incinerators at the Sauget facility began with the performance of RATAs. The RATA of the CO and O_2 continuous monitoring systems (CEMS) of Unit 4 was performed on September 4, 2013. The RATA of the CO and O_2 CEMS of Unit 3 was performed on September 5, 2013, and the RATA of the CO and O_2 CEMS of Unit 2 was performed on September 6, 2013.

The CPT with testing for dioxins/furans, THC, CO, PM, HCl/Cl_2 gas, mercury, SVM, and LVM was conducted in October 2013. The CPT testing for each of the three incinerators was observed by staff from the Illinois Environmental Protection Agency (IEPA). Due to the federal government shutdown in the earlier stages of October 2013, staff from EPA Region 5 observed the CPT testing only of Unit 4, the last unit tested.

The subsequent CPT of Unit 2 was begun October 8, 2013. Run 1 of the test was successfully completed on this day. Run 2 was performed on October 9, 2013. The first part of Run 2 was successfully completed. During the second part of Run 2, the THC monitor failed and drifted well beyond the emission limit of the HWC MACT for THC. It was recognized that the THC monitor used to demonstrate compliance with the HWC MACT had malfunctioned because Veolia monitors stack gases for THC, and the concentration of THC monitored by Veolia had not increased. The second part of Run 2 was stopped for this reason. The THC monitor was replaced and Run 3 was performed on October 10, 2013. With the successful completion of Run 3, three runs for PM had been successfully completed. The third run of the second part of the test of Unit 2 (i.e., Run 4) was performed on October 11, 2013. At the completion of Run 4, the leak-check of the pitot tubes of the dioxins/furans sampling train did not meet the full requirements of the applicable EPA test method (i.e., EPA Method 2) although it was considered that the leak-check of the pitot tubes was acceptable. Because it was felt that the results of the dioxins/furans sampling train were acceptable, this run of the CPT of Unit 2 was not re-done. Personnel from EPA Region 5 declared that the dioxins/furans sampling train was unacceptable when on-site the week of October 21, 2013. Another run of the second part of the test, for HCl/Cl_2, metals, and dioxins/furans, (i.e., Run 5) was performed on October 30, 2013.

The subsequent CPT of Unit 3 was begun October 15, 2013. The first part of Run 1, for PM, was successfully completed on this day. However, the isokinetic sampling rate of the dioxins/furans sampling train did not meet method acceptance criteria, and the second part of this run, for HCl/Cl_2, metals, and dioxins/furans, had to be repeated as Run 4. Run 2 was performed on October 16, 2013, and Run 3 was performed on October 17, 2013. The third successful run of the second part of the test of Unit 3 (i.e., Run 4) was performed on October 18, 2013.

The subsequent CPT of Unit 4 was begun October 23, 2013 with the successful completion of Run 1. Run 2 was performed on October 24, 2013. The glass nozzle of the PM sampling train was chipped with the withdrawal of the sampling probe from the stack at the completion of the run. Although the sampling train met all acceptance criteria, including the final leak-check, the second run for PM was repeated. Run 3 was performed on October 25, 2013. The third (accepted) run for PM (i.e., Run 4) was performed at the conclusion of Run 3 for PM. Incinerator operating conditions required for the PM testing were maintained through both of these test runs.

1.5 Summary of Results

Veolia successfully demonstrated compliance with all of the applicable regulatory requirements of the HWC MACT for Unit 2, Unit 3, and Unit 4 using the results from the single test condition of each unit. Table 1-3 summarizes the results of the emissions testing of Unit 2. Table 1-4 summarizes the results of the emissions testing of Unit 3, and Table 1-5 summarizes the results of the emissions testing of Unit 4. The test for each unit consisted of three reported runs for each parameter of interest. The term "test condition" refers to the sum of all the testing activities designed to demonstrate the operation of the waste incinerator under particular operating parameters (e.g., development of operating parameter limits) under the HWC MACT. The term "test run" refers to the replicate testing periods. A complete definition of the test protocol and methodology is defined in the CPT Plan and QAPjP.

1.6 Report Organization

The remainder of this report presents the following sections:

- Section 2.0 – Process Operations;
- Section 3.0 – Sampling, Analysis, and Monitoring Procedures;
- Section 4.0 – Results; and
- Section 5.0 – Quality Assurance/Quality Control.

The appendices provide raw data, including chain-of-custody forms, sampling data sheets and logs, laboratory reports, process data, CMS PET sheets, spiking reports, and sampling equipment calibration forms.

Table 1-3. Unit 2 Compliance Summary

Parameter	HWC MACT Limit	Unit 2				
		Run 1 10-8-13	Run 2 10-9-13	Run 3 10-10-13	Run 5 10-30-13	Average
Particulate Matter – EPA Method 5	0.013 gr/dscf corrected to 7% O_2	<0.00087	<0.00068	<0.00058		<0.00071
HCl/Cl_2 – Modified EPA Method 26A	32 ppmv dry, as Cl^-, corrected to 7% O_2	<29		<13	<18	<20
Metals – EPA Method 29						
LVM	92 µg/dscm corrected to 7% O_2	<2.8		<2.4	<2.5	<2.6
SVM	230 µg/dscm corrected to 7% O_2	<1.1		<0.78	<1.0	<0.95
Mercury	130 µg/dscm corrected to 7% O_2	<90		<120	<95	<100
Dioxins/Furans – SW-846 Method 0023A	0.20 ng/dscm corrected to 7% O_2	0.00543		0.00624	0.0157	0.00912
Total Hydrocarbons (THC) – EPA Method 25A	10 ppmv, dry corrected to 7% O_2	1.6		0.18	0.49	0.75
Carbon Monoxide (CO)[1]	100 ppmv, dry corrected to 7% O_2	0.00		0.00	0.15	0.05

[1] THC and CO results collected during the stack sampling for dioxins/furans.

Table 1-4. Unit 3 Compliance Summary

Parameter	HWC MACT Limit	Unit 3				
		Run 1 10-15-13	Run 2 10-16-13	Run 3 10-17-13	Run 4 10-18-13	Average
Particulate Matter – EPA Method 5	0.013 gr/dscf corrected to 7% O_2	0.00194	0.00202	0.00204		0.00200
HCl/Cl_2 – Modified EPA Method 26A	32 ppmv dry, as Cl^-, corrected to 7% O_2		<4.5	<4.4	<1.8	<3.6
Metals – EPA Method 29						
LVM	92 µg/dscm corrected to 7% O_2		<8.6	<8.9	<11	<9.4
SVM	230 µg/dscm corrected to 7% O_2		<20	<14	<12	<15
Mercury	130 µg/dscm corrected to 7% O_2		<59	<39	<46	<48
Dioxins/Furans – SW-846 Method 0023A	0.20 ng/dscm corrected to 7% O_2		0.00103	0.00115	0.00134	0.00118
Total Hydrocarbons (THC) – EPA Method 25A	10 ppmv, dry corrected to 7% O_2		0.44	0.26	0.57	0.43
Carbon Monoxide (CO)[1]	100 ppmv, dry corrected to 7% O_2		0.00	0.00	0.00	0.00

[1] THC and CO results collected during the stack sampling for dioxins/furans.

Table 1-5. Unit 4 Compliance Summary

Parameter	HWC MACT Limit	Unit 4				
		Run 1 10-23-13	Run 2 10-24-13	Run 3 10-25-13	Run 4 10-25-13	Average
Particulate Matter – EPA Method 5	0.013 gr/dscf corrected to 7% O_2	0.00269		0.00183	<0.0019	<0.0021
HCl/Cl_2 – Modified EPA Method 26A	32 ppmv dry, as Cl^-, corrected to 7% O_2	<11	<8.0	<23		<14
Metals – EPA Method 29						
LVM	92 µg/dscm corrected to 7% O_2	<12	<9.8	<7.5		<9.7
SVM	230 µg/dscm corrected to 7% O_2	<8.6	<4.5	<10		<7.8
Mercury	130 µg/dscm corrected to 7% O_2	<7.1	<8.1	<15		<10
Dioxins/Furans – SW-846 Method 0023A	0.40 ng/dscm corrected to 7% O_2	0.138	0.132	0.139		0.137
Total Hydrocarbons (THC) – EPA Method 25A	10 ppmv, dry corrected to 7% O_2	0.51	0.60	0.85		0.65
Carbon Monoxide (CO)[1]	100 ppmv, dry corrected to 7% O_2	0.07	0.06	0.08		0.07

[1] THC and CO results collected during the stack sampling for dioxins/furans.

2.0 Process Operations

This section presents brief descriptions of the three incinerators at Veolia's facility in Sauget, IL, and process and feedrate results from the CPTs of the three incinerators.

2.1 Process Overview

Veolia operates two Fixed Hearth Dual Chambered incinerators (Units 2 and 3) and one rotary kiln incinerator (Unit 4) at the Sauget, IL facility. The two fixed hearth units are rated at 16 million Btu/hr each. Unit 3 is a mirror image of Unit 2. Both of these units have their own waste handling systems.

Units 2 and 3 feature a two-stage combustion process. Ignition of waste material takes place in the primary (lower) combustion chamber (PCC). A secondary (upper) combustion chamber (SCC) serves as an "afterburner" for process gases. Liquid wastes, organic and aqueous, and solid wastes are fed to the PCC. Air-atomizing injectors are used for injection of high-Btu liquids, low-Btu liquids and specialty feed liquids. Solids, usually packaged in plastic or fiberboard containers, are introduced into the incinerator through a PLC controlled airlock-ram system located at the lower front of the PCC.

The air pollution control systems of Units 2 and 3 consist of a spray dryer absorber and fabric filter baghouse modules. The air pollution control system neutralizes acidic compounds and removes particulate matter from the exhaust gas. Two subsystems, the spray dryer absorber and the fabric filter, carry out the chemical neutralization and particulate removal functions, respectively. An induced draft fan and stack provide the mechanical energy required to transport the flue gas through the interconnecting ductwork, to its eventual discharge point to atmosphere. The only difference between Units 2 and 3 is that Unit 2 is equipped with four (4) baghouse modules, while Unit 3 is equipped with three (3) baghouse modules. However, each incinerator is operated identically with only three baghouse modules in service during operation.

A complete description of Units 2 and 3 is provided in the CPT Plan. A process flow diagram for Unit 2 is presented in Figure 2-1, and a process flow diagram for Unit 3 is presented in Figure 2-2.

Unit 4 is rated at 50 million Btu/hr and is equipped with its own tank farm system, drum storage, bulk solids storage and feed systems. Unit 4 includes a rotary kiln as the PCC, and a SCC. Liquids are fed to either the kiln PCC or the SCC. Bulk solid wastes are fed to the kiln through the ram feeder. Containerized wastes are fed to the kiln through the ram feeder or the auxiliary ram feeder. The liquid waste injectors used in the combustion chambers are air-atomizing injectors, and are used for injection of pumpable sludges, aqueous wastes and organic liquid wastes to the kiln and for injection of organic liquid waste to the SCC.

The air pollution control system consists of a tempering chamber, two spray dryer absorbers, and fabric filter baghouse modules with carbon injection. The air pollution control system neutralizes acidic compounds and removes particulate from the exhaust gas. Two subsystems, the spray dryer absorber and the fabric filter, carry out the chemical neutralization and particulate removal functions, respectively. An induced draft fan and stack provide the mechanical energy required to transport the flue gas through the interconnecting ductwork, to its eventual discharge point to atmosphere.

A complete description of Unit 4 is provided in the Comprehensive Performance Test Plan. A process flow diagram for Unit 4 is presented in Figure 2-3.

Figure 2-1. Unit 2 Process Flow Diagram

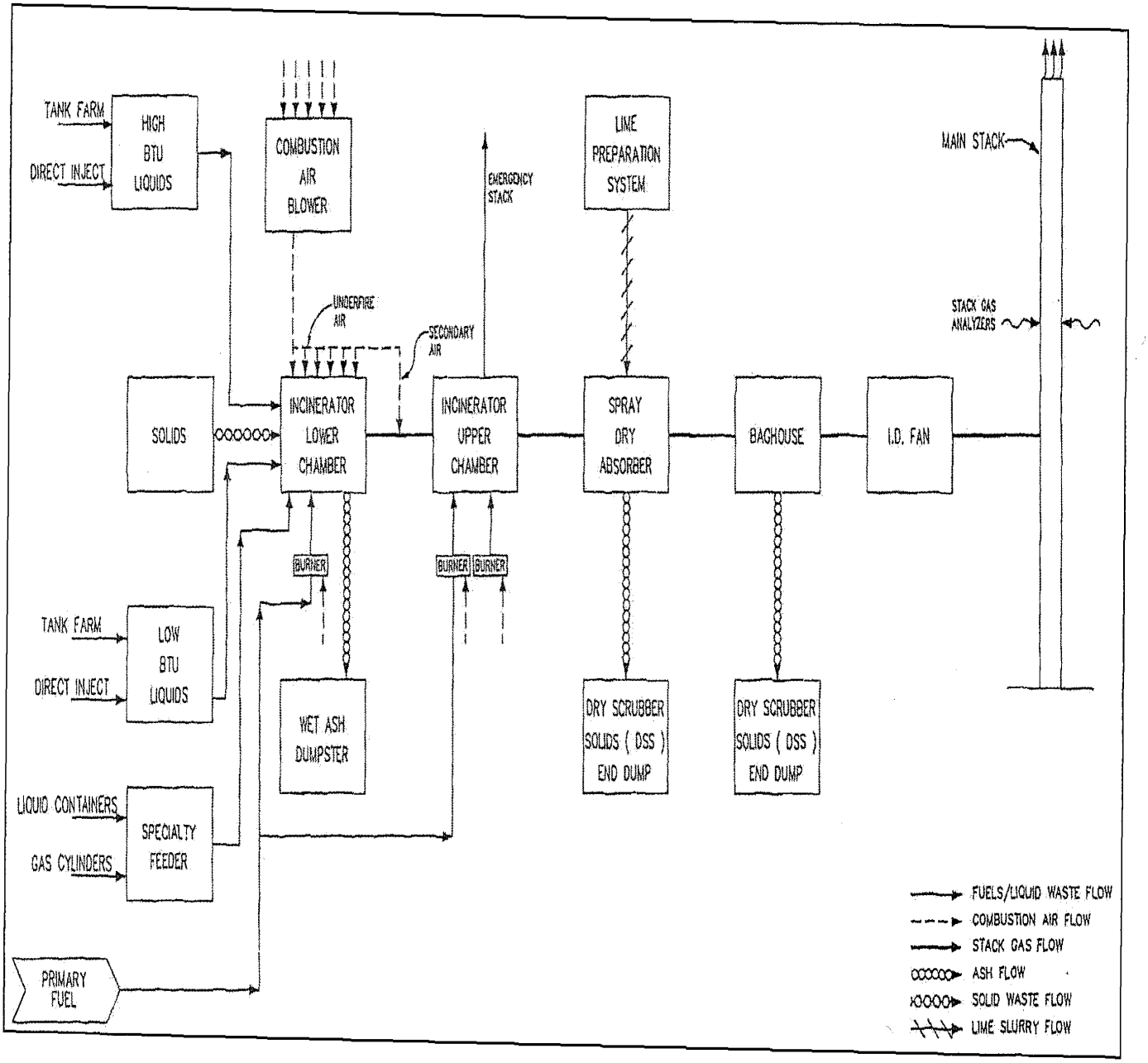

Figure 2-2. Unit 3 Process Flow Diagram

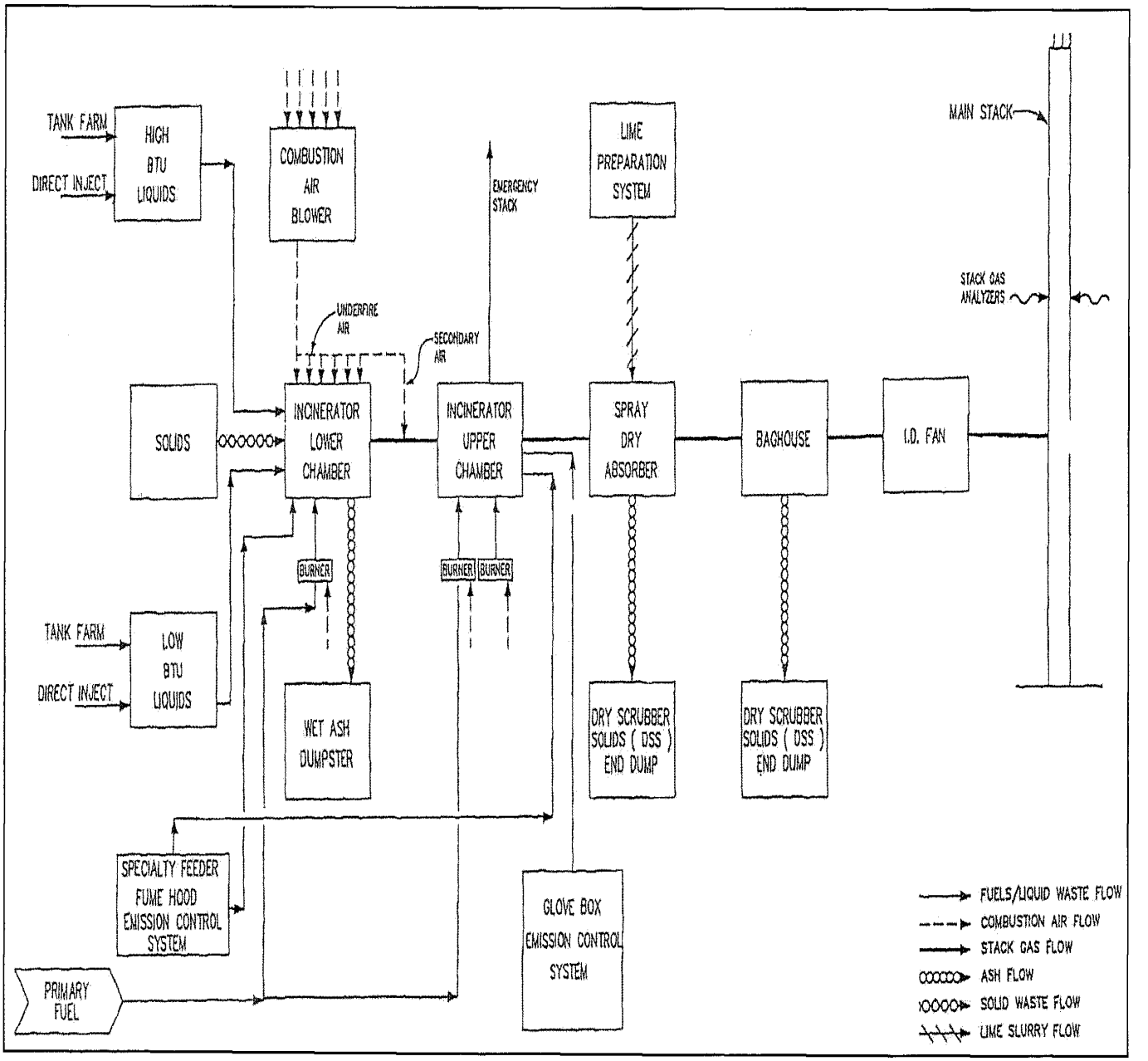

Figure 2-3. Unit 4 Process Flow Diagram

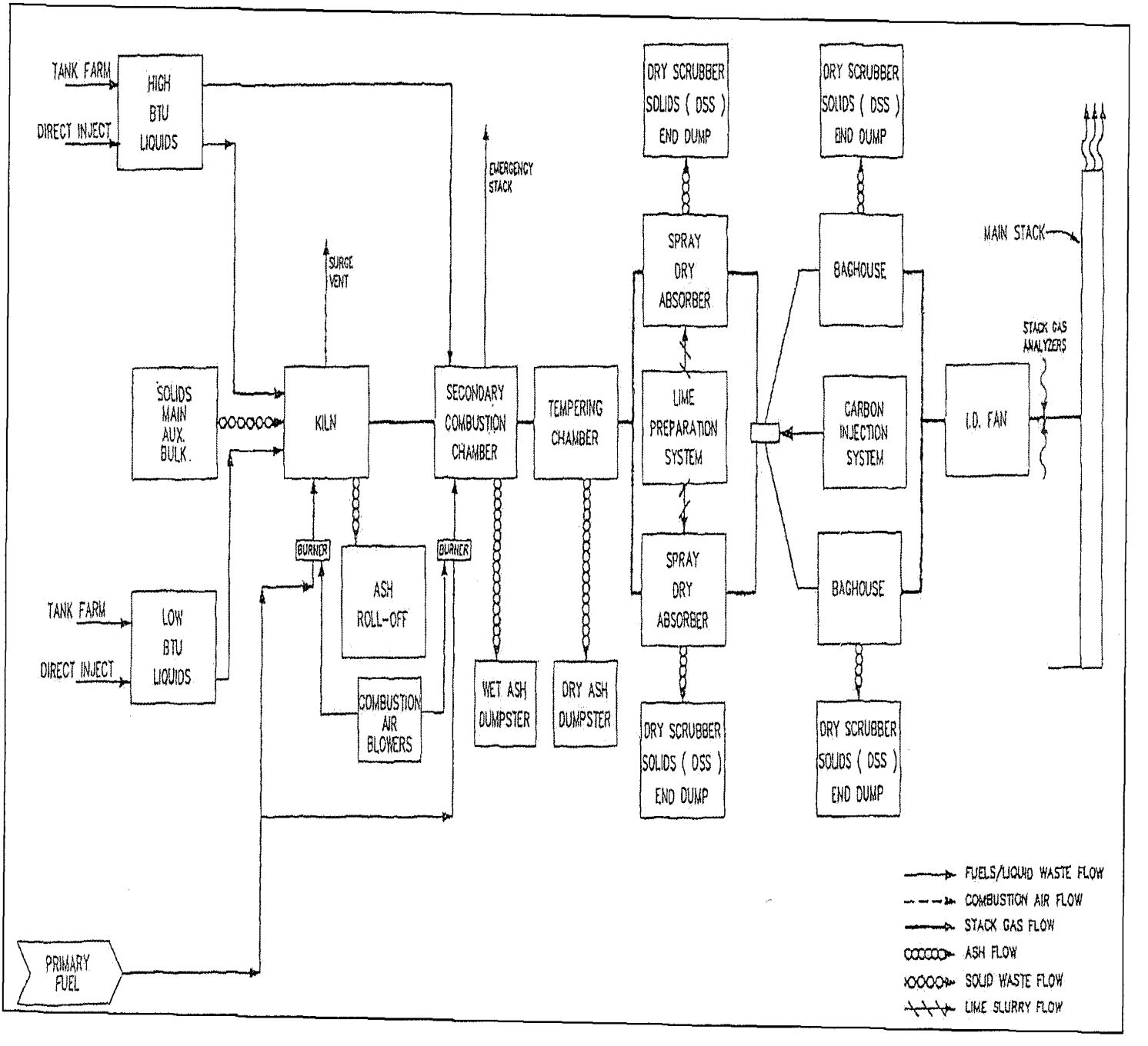

2.2 Process Operating Data and Waste Feedrates

Process parameters that were monitored and recorded during the test by Veolia, and feedrates that result from the combination of waste feedrates with the respective waste feed analyses, are presented in this section. Process data recorded by Veolia every 15 seconds are used to create one-minute averages (OMAs). The DCS calculates hourly rolling averages (HRAs) for applicable parameters using the OMA from the first minute and the OMAs from previous 59 minutes of data. The raw data from Veolia's DCS are provided in Appendix C.

2.2.1 Unit 2

Process data and waste and parameter feedrates have been determined and are presented for the time periods over the collection of the stack gas sampling trains for particulate matter (EPA Method 5), HCl/Cl_2 (Modified EPA Method 26A), metals (EPA Method 29), and dioxins/furans (SW-846 Method 0023A) and THC (EPA Method 25A).

Table 2-1 presents process data summaries and waste feedrates during the particulate matter (PM) stack gas sampling of the first part of each test run for Unit 2.

Table 2-2 presents process data summaries and waste feedrates during the HCl/Cl_2 stack gas sampling of the second part of each test run for Unit 2.

Table 2-3 presents process data summaries and waste feedrates during the metals stack gas sampling of the second part of each test run for Unit 2.

Table 2-4 presents process data summaries and waste feedrates during the dioxins/furans and THC stack gas sampling and monitoring of the second part of each test run for Unit 2.

2.2.2 Unit 3

Table 2-5 presents process data summaries and waste feedrates during the PM stack gas sampling of the first part of each test run for Unit 3.

Table 2-6 presents process data summaries and waste feedrates during the HCl/Cl_2 stack gas sampling of the second part of each test run for Unit 3.

Table 2-7 presents process data summaries and waste feedrates during the metals stack gas sampling of the second part of each test run for Unit 3.

Table 2-8 presents process data summaries and waste feedrates during the dioxins/furans and THC stack gas sampling and monitoring of the second part of each test run for Unit 3.

2.2.3 Unit 4

Table 2-9 presents process data summaries and waste feedrates during the PM stack gas sampling of the first part of each test run for Unit 4.

Table 2-10 presents process data summaries and waste feedrates during the HCl/Cl_2 stack gas sampling of the second part of each test run for Unit 4.

Table 2-11 presents process data summaries and waste feedrates during the metals stack gas sampling of the second part of each test run for Unit 4.

Table 2-12 presents process data summaries and waste feedrates during the dioxins/furans and THC stack gas sampling and monitoring of the second part of each test run for Unit 4.

2.3 Spiking of Metals and Chlorine

During the test of each incinerator, the metals chromium, lead, and mercury were spiked into the incinerator. The spiking was performed by Veolia. Details concerning the spiking of metals and chlorine are presented in Appendix B.

The spiking rates of chlorine during the HCl/Cl_2 stack sampling of the second part of each run are presented in Table 2-13 for Unit 2, Table 2-14 for Unit 3, and 2-15 for Unit 4.

The spiking rates of chromium, lead, mercury, and chlorine during the metals stack sampling of the second part of each run are presented in Table 2-16 for Unit 2, Table 2-17 for Unit 3, and 2-18 for Unit 4.

The spiking solutions of chromium (chromic acid) and mercury (mercuric nitrate) were sampled at the beginning, at port change, and at the end of the EPA Method 29 stack sampling for metals of each run, and each of these samples were analyzed for chromium or mercury, respectively. The analytical results for chromic acid and mercuric nitrate solutions are presented in Tables 2-19 and 2-20 for Unit 2, Tables 2-21 and 2-22 for Unit 3, and Tables 2-23 and 2-24 for Unit 4.

Table 2-1. Unit 2 – Summary of Process Data[1] and Feedrates During the EPA Method 5 Stack Sampling for PM

Operating Parameter	Units	Basis	Run 1 10-8-13 11:50 - 13:00			Run 2 10- 9-13 09:45 - 10:53			Run 3 10-10-13 09:15 - 10:23			Average		
			Max	Avg	Min	Max	Avg	Min	Max	Avg	Min	Max	Avg	Min
Stack Gas Flowrate	ACFM	HRA	15,015	14,955	14,876	15,529	15,430	15,324	15,690	15,374	15,240	15,412	15,253	15,147
Low-Btu Liquid Waste Feedrate	lb/hr	OMA	1,947.7	1,277.2	899.3	1,948.6	1,353.3	749.5	2850.8	1288.3	299.8	2,249.0	1,306.3	649.5
High-Btu Liquid Waste Feedrate	lb/hr	OMA	1,009.9	1,000.2	982.6	1,142.2	997.7	792.3	1008.4	998.5	985.5	1,053.5	998.8	920.1
Specialty Liquid Waste Feedrate	lb/hr	OMA	351.7	270.8	190.5	424.9	256.5	131.9	468.9	296.7	161.2	415.1	274.6	161.2
Containerized Solids Waste Feedrate	lb/hr	OMA	734.9			738.4			746.0			739.8		
Ash Feedrate	lb/hr	OMA	501.6			513.2			494.2			503.0		
PCC Temperature	°F	OMA	1,735	1,708	1,640	1,733	1,691	1,650	1,759	1,698	1,638	1,742	1,699	1,643
SCC Temperature	°F	OMA	1,894	1,880	1,867	1,893	1,880	1,869	1,900	1,882	1,870	1,896	1,881	1,869
CO, Corrected to 7% O_2	ppmvd	OMA	0.00	0.00	0.00	0.00	0.00	0.00	0.00	0.00	0.00	0.00	0.00	0.00
Baghouse Inlet Temperature[2]	°F	OMA	440	420	396	444	420	400	438	421	393	441	420	396

[1] Process data are the averages for the duration of the emissions sampling run for particulate matter in stack.

[2] Measured as the SDA (Spray Dryer/Absorber) Outlet Temperature.

Note: Values in bold used to develop OPL.

Table 2-2. Unit 2 – Summary of Process Data[1] and Feedrates During the Modified EPA Method 26A Stack Sampling for HCl/Cl_2

Operating Parameter	Units	Basis	Run 1 10-8-13 15:40 - 16:40			Run 3 10-10-13 12:30 - 13:30			Run 5 10-30-13 12:45 - 13:45			Average		
			Max	Avg	Min	Max	Avg	Min	Max	Avg	Min	Max	Avg	Min
Stack Gas Flowrate	acfm	HRA	15,410	15,278	15,142	15,854	15,652	15,310	15,407	15,225	15,038	15,557	15,385	15,163
Low-Btu Liquid Waste Feedrate	lb/hr	OMA	2,546.4	1,422.1	299.8	2,246.8	1,500.9	899.6	2,321.8	1,451.9	374.9	2371.6	1458.3	524.8
High-Btu Liquid Waste Feedrate	lb/hr	OMA	1,424.2	1,370.8	1,191.0	1,129.5	1,098.7	1,051.6	1,226.6	1,200.0	1,163.7	1260.1	1223.1	1135.5
Specialty Liquid Waste Feedrate	lb/hr	OMA	586.1	485.9	410.3	527.5	398.2	307.7	615.4	440.8	263.7	576.3	441.6	327.2
Containerized Solids Waste Feedrate[2]	lb/hr		884.8			902.0			880.4			889.0		
Total Chlorine Feedrate	lb/hr		208.0			207.5			202.8			206.1		
Sorbent Feedrate	lb/lb Cl_2	HRA	2.32			2.18			2.21			2.24		
Carrier Fluid Flowrate	gal/lb Cl_2	HRA	1.93			1.85			1.92			1.90		
PCC Temperature	°F	OMA	1,772	1,707	1,648	1,813	1,721	1,631	1,753	1,703	1,608	1,779	1,710	1,629
SCC Temperature	°F	OMA	1,958	1,891	1,866	1,910	1,878	1,865	1,897	1,882	1,872	1,922	1,884	1,868
CO, Corrected to 7% O_2	ppmvd	OMA	**0.00**	**0.00**	**0.00**	**0.00**	**0.00**	**0.00**	**0.66**	**0.08**	**0.00**	**0.22**	**0.03**	**0.00**
Baghouse Inlet Temperature[3]	°F	OMA	447	421	392	439	418	399	439	419	394	441	420	395

[1] Process data are the averages for the duration of the emissions sampling run for HCl/Cl_2 in stack.

[2] Containerized Waste Feedrate includes the spikes of hexachloroethane, lead nitrate, and mercuric nitrate solution.

[3] Measured as the SDA (Spray Dryer/Absorber) Outlet Temperature.

Note: Values in bold used to develop OPL.

Table 2-3. Unit 2 – Summary of Process Data[1] and Feedrates During the EPA Method 29 Stack Sampling for Metals

Operating Parameter	Units	Basis	Run 1 10-8-13 15:40 - 18:43			Run 3 10-10-13 12:30 - 15:10			Run 5 10-30-13 12:45 - 15:32			Average		
			Max	Avg	Min	Max	Avg	Min	Max	Avg	Min	Max	Avg	Min
Stack Gas Flowrate	acfm	HRA	15,602	15,375	14,946	15,854	15,487	15,126	15,636	15,438	15,038	15,697	15,433	15,037
Low-Btu Liquid Waste Feedrate	lb/hr	OMA	2,546.4	1,474.6	299.8	2,246.8	1,513.3	899.6	2,547.3	1,396.5	0.9	2,446.8	1,461.5	400.1
High-Btu Liquid Waste Feedrate	lb/hr	OMA	1,424.2	1,289.1	1,191.0	1,129.5	1,098.9	1,051.6	1,226.6	1,164.6	973.4	1,260.1	1,184.2	1,072.0
Specialty Liquid Waste Feedrate	lb/hr	OMA	615.4	432.6	0.0	586.1	425.4	307.7	732.6	445.3	234.4	644.7	434.4	180.7
Containerized Solids Waste Feedrate[2]	lb/hr		895.0			883.1			891.2			889.8		
SVM Feedrate	lb/hr		61.9			61.7			62.0			61.9		
LVM Feedrate - Total	lb/hr		45.8			47.3			45.9			46.3		
LVM Feedrate - Pumpable	lb/hr		45.9			47.3			45.9			46.3		
Mercury Feedrate	lb/hr		0.00205			0.00206			0.00224			0.00212		
Total Chlorine Feedrate	lb/hr		209.6			203.6			205.1			206.1		
Baghouse Inlet Temperature[3]	°F	OMA	447	420	392	439	419	399	439	419	394	441	420	395
PCC Temperature	°F	OMA	1,772	1,701	1,622	1,821	1,708	1,607	1,798	1,705	1,608	1,797	1,705	1,612
SCC Temperature	°F	OMA	1,958	1,875	1,714	1,962	1,886	1,865	1,897	1,882	1,857	1,939	1,881	1,812
CO, Corrected to 7% O_2	ppmvd	OMA	0.00	0.00	0.00	0.00	0.00	0.00	1.25	0.13	0.00	0.42	0.04	0.00

[1] Process data are the averages for the duration of the emissions sampling run for Metals in stack.

[2] Containerized Waste Feedrate includes the spikes of hexachloroethane, lead nitrate, and mercuric nitrate solution.

[3] Measured as the SDA (Spray Dryer/Absorber) Outlet Temperature.

Note: Values in bold used to develop OPL.

Table 2-4. Unit 2 – Summary of Process Data[1] and Feedrates During the SW-846 Method 0023A Stack Sampling for Dioxins/Furans

Operating Parameter	Units	Basis	Run 1 10-8-13 15:40 - 18:55			Run 3 10-10-13 12:30 - 15:40			Run 5 October 30, 2013 12:45 - 16:02			Average		
			Max	Avg	Min	Max	Avg	Min	Max	Avg	Min	Max	Avg	Min
Stack Gas Flowrate	ACFM	HRA	15,602	15,345	14,862	15,854	15,462	15,126	15,636	15,416	15,038	15,697	15,408	15,009
Low-Btu Liquid Waste Feedrate	lb/hr	OMA	2546.4	1470.7	299.8	2,246.8	1,510.2	899.6	2547	1383	1	2,446.8	1,454.7	400.1
High-Btu Liquid Waste Feedrate	lb/hr	OMA	1424.2	1286.7	1191.0	1,129.5	1,099.2	1,051.6	1227	1140	973	1,260.1	1,175.2	1,072.0
Specialty Liquid Waste Feedrate	lb/hr	OMA	615.4	429.8	0.0	586.1	425.5	307.7	733	445	234	644.7	433.6	180.7
Containerized Solids Waste Feedrate[2]	lb/hr		897.9			867.4			874.1			879.8		
Total Waste Feedrate[3]	lb/hr	HRA	4,473.4	**4,317.4**	**4,060.4**	4,369.4	**4,110.4**	**2,944.5**	4,446.7	**4,119.3**	**3,707.4**	4,429.8	4,182.4	3,570.8
Total Pumpable Waste Feedrate[3]	lb/hr	HRA	3,564.8	**3,429.5**	**3,241.7**	3,469.0	**3,276.5**	**2,507.5**	3,519.5	**3,267.4**	**2,930.6**	3,517.8	3,324.5	2,893.3
PCC Temperature	°F	OMA	1,772	1,701	1,622	1,821	1,707	1,594	1,798	1,701	1,608	1,797	1,703	1,608
SCC Temperature	°F	OMA	1,958	1,875	1,714	1,962	1,884	1,865	1,899	1,883	1,857	1,940	1,881	1,812
Baghouse Inlet Temperature[4]	°F	OMA	447	420	392	439	419	399	439	419	394	441	420	395
CO, Corrected to 7% O_2	ppmvd	OMA	0.00	0.00	0.00	0.00	0.00	0.00	1.62	0.15	0.00	0.54	0.05	0.00

[1] Process data are the averages for the duration of the emissions sampling run for Dioxins/Furans in stack.

[2] Containerized Waste Feedrate includes the spikes of hexachloroethane, lead nitrate, and mercuric nitrate solution.

[3] Total Waste Feedrate and Total Pumpable Waste Feedrate, maximum, average, and minimum, includes the average chromic acid solution feedrate.

[4] Measured as the SDA (Spray Dryer/Absorber) Outlet Temperature.

Note: Values in bold used to develop OPL.

Table 2-5. Unit 3 – Summary of Process Data[1] and Feedrates During the EPA Method 5 Stack Sampling for PM

Operating Parameter	Units	Basis	Run 1 10-15-13 13:16 - 14:25			Run 2 10-16-13 11:15 - 12:25			Run 3 10-17-13 09:50 - 10:57			Average		
			Max	Avg	Min	Max	Avg	Min	Max	Avg	Min	Max	Avg	Min
Stack Gas Flowrate	ACFM	HRA	15,245	15,167	15,149	15,407	15,279	15,173	15,278	15,064	14,901	15,310	15,170	15,074
Low-Btu Liquid Waste Feedrate	lb/hr	OMA	1,636.3	1,292.9	890.5	1,635.2	955.4	368.1	2,007.3	1,357.6	367.9	1,759.6	1,202.0	542.2
High-Btu Liquid Waste Feedrate	lb/hr	OMA	861.1	847.9	833.4	887.5	818.2	742.2	933.0	875.3	810.1	893.8	847.1	795.2
Specialty Liquid Waste Feedrate	lb/hr	OMA	395.6	307.9	131.9	381.0	269.1	190.5	791.2	457.4	263.7	522.6	344.8	195.4
Containerized Solids Waste Feedrate	lb/hr	OMA	738.3			742.1			720.7			733.7		
Ash Feedrate	lb/hr	OMA	499.9			510.9			566.5			525.8		
PCC Temperature	°F	OMA	1,766	1,707	1,650	1,726	1,704	1,684	1,742	1,704	1,614	1,744	1,705	1,649
SCC Temperature	°F	OMA	1,899	1,890	1,883	1,895	1,885	1,878	1,902	1,885	1,863	1,899	1,887	1,875
CO, Corrected to 7% O_2	ppmvd	OMA	**0.00**	**0.00**	**0.00**	**0.00**	**0.00**	**0.00**	**0.00**	**0.00**	**0.00**	**0.00**	**0.00**	**0.00**
Baghouse Inlet Temperature[2]	°F	OMA	431	420	407	431	421	401	434	420	402	432	420	403

[1] Process data are the averages for the duration of the emissions sampling run for particulate matter in stack.

[2] Measured as the SDA (Spray Dryer/Absorber) Outlet Temperature

Note: Values in bold used to develop OPL

Table 2-6. Unit 3 – Summary of Process Data[1] and Feedrates During the Modified EPA Method 26A Stack Sampling for HCl/Cl_2

Operating Parameter	Units	Basis	Run 2 10-16-13 14:00 - 15:00			Run 3 10-17-13 12:30 - 13:33			Run 4 10-18-13 09:35 - 10:35			Average		
			Max	Avg	Min	Max	Avg	Min	Max	Avg	Min	Max	Avg	Min
Stack Gas Flowrate	acfm	HRA	15,547	15,395	15,088	15,360	15,204	14,840	15,228	15,193	15,116	15,378	15,264	15,015
Low-Btu Liquid Waste Feedrate	lb/hr	OMA	2,530.5	1,783.5	442.9	2,008.4	1,563.4	0.0	2,231.4	1,725.3	1,261.8	2,256.8	1,690.7	568.2
High-Btu Liquid Waste Feedrate	lb/hr	OMA	1,053.0	977.2	926.8	1,212.3	1,151.9	1,039.1	1,263.1	1,163.5	1,003.3	1,176.1	1,097.6	989.7
Specialty Liquid Waste Feedrate	lb/hr	OMA	380.9	177.5	87.9	556.8	407.7	322.3	410.3	248.8	146.5	449.3	278.0	185.6
Containerized Solids Waste Feedrate[2]	lb/hr		904.4			893.8			861.3			886.5		
Total Chlorine Feedrate	lb/hr		207.0			206.0			201.0			204.7		
Sorbent Feedrate	lb/lb Cl_2	HRA	2.13			1.99			2.13			2.09		
Carrier Fluid Flowrate	gal/lb Cl_2	HRA	1.86			1.78			1.88			1.84		
PCC Temperature	°F	OMA	1,746	1,709	1,675	1,770	1,715	1,691	1,743	1,719	1,694	1,753	1,714	1,686
SCC Temperature	°F	OMA	1,909	1,887	1,867	1,931	1,884	1,842	1,923	1,881	1,864	1,921	1,884	1,858
CO, Corrected to 7% O_2	ppmvd	OMA	0.00	0.00	0.00	0.00	0.00	0.00	0.00	0.00	0.00	0.00	0.00	0.00
Baghouse Inlet Temperature[3]	°F	OMA	430	420	395	433	420	380	429	415	385	431	418	386

[1] Process data are the averages for the duration of the emissions sampling run for HCl/Cl_2 in stack.

[2] Containerized Waste Feedrate includes the spikes of hexachloroethane, lead nitrate, and mercuric nitrate solution.

[3] Measured as the SDA (Spray Dryer/Absorber) Outlet Temperature.

Note: Values in bold used to develop OPL.

Table 2-7. Unit 3 – Summary of Process Data[1] and Feedrates During the EPA Method 29 Stack Sampling for Metals

Operating Parameter	Units	Basis	Run 2 10-16-13 14:00 - 16:50			Run 3 10-17-13 12:30 - 15:25			Run 4 10-18-13 09:35 - 12:20			Average		
			Max	Avg	Min	Max	Avg	Min	Max	Avg	Min	Max	Avg	Min
Stack Gas Flowrate	acfm	HRA	15,547	15,274	15,088	15,429	15,230	14,840	15,277	15,133	14,983	15,417	15,212	14,970
Low-Btu Liquid Waste Feedrate	lb/hr	OMA	2,531.2	1,787.6	442.9	2,157.8	1,685.3	0.0	2,231.4	1,707.4	1,261.8	2,306.8	1,726.8	568.2
High-Btu Liquid Waste Feedrate	lb/hr	OMA	1,114.5	1,043.9	926.8	1,212.3	1,166.5	1,039.1	1,263.1	1,197.7	1,001.3	1,196.6	1,136.0	989.1
Specialty Liquid Waste Feedrate	lb/hr	OMA	410.3	202.9	0.0	556.8	350.0	0.0	410.3	244.8	146.5	459.1	265.9	48.8
Containerized Solids Waste Feedrate[2]	lb/hr		890.9			888.0			873.6			884.2		
SVM Feedrate	lb/hr		62.1			62.5			62.2			62.3		
LVM Feedrate - Total	lb/hr		46.3			46.1			45.7			46.1		
LVM Feedrate - Pumpable	lb/hr		46.3			46.1			45.7			46.0		
Mercury Feedrate	lb/hr		0.00221			0.00214			0.00227			0.00221		
Total Chlorine Feedrate	lb/hr		204.2			204.6			203.7			204.2		
Baghouse Inlet Temperature[3]	°F	OMA	430	419	395	433	420	380	436	421	385	433	420	386
PCC Temperature	°F	OMA	1,752	1,710	1,675	1,770	1,707	1,657	1,743	1,708	1,610	1,755	1,708	1,647
SCC Temperature	°F	OMA	1,909	1,885	1,867	1,931	1,885	1,842	1,923	1,886	1,864	1,921	1,885	1,858
CO, Corrected to 7% O_2	ppmvd	OMA	**0.00**	**0.00**	**0.00**	**0.00**	**0.00**	**0.00**	**0.00**	**0.00**	**0.00**	**0.00**	**0.00**	**0.00**

[1] Process data are the averages for the duration of the emissions sampling run for Metals in stack.

[2] Containerized Waste Feedrate includes the spikes of hexachloroethane, lead nitrate, and mercuric nitrate solution.

[3] Measured as the SDA (Spray Dryer/Absorber) Outlet Temperature.

Note: Values in bold used to develop OPL.

Table 2-8. Unit 3 – Summary of Process Data[1] and Feedrates During the SW-846 Method 0023A Stack Sampling for Dioxins/Furans

Operating Parameter	Units	Basis	Run 2 10-161-13 14:00 - 17:20			Run 3 10-17-13 12:30 - 15:55			Run 4 10-18-13 09:35 - 12:50			Average		
			Max	Avg	Min	Max	Avg	Min	Max	Avg	Min	Max	Avg	Min
Stack Gas Flowrate	ACFM	HRA	15,547	15,248	15,088	15,429	15,219	14,840	15,277	15,125	14,983	15,417	15,197	14,970
Low-Btu Liquid Waste Feedrate	lb/hr	OMA	2,531.2	1,806.5	442.9	2,157.8	1,688.0	0.0	2,231.4	1,718.8	1,261.8	2,306.8	1,737.7	568.2
High-Btu Liquid Waste Feedrate	lb/hr	OMA	1,114.5	1,052.3	926.8	1,212.3	1,167.4	1,039.1	1,263.1	1,188.4	805.7	1,196.6	1,136.0	923.9
Specialty Liquid Waste Feedrate	lb/hr	OMA	410.3	199.6	0.0	556.8	340.4	0.0	410.3	246.2	146.5	459.1	262.1	48.8
Containerized Solids Waste Feedrate[2]	lb/hr		887.2			870.5			872.5			876.7		
Total Waste Feedrate[3]	lb/hr	HRA	4,288.0	**4,057.1**	**2,491.4**	4,503.5	**4,250.4**	**2,904.3**	4,437.3	**4,233.2**	**3,734.8**	4,409.6	4,180.2	3,043.5
Total Pumpable Waste Feedrate[3]	lb/hr	HRA	3,412.8	**3,209.1**	**2,055.4**	3,613.3	**3,410.5**	**2,467.1**	3,556.0	**3,393.0**	**3,238.5**	3,527.4	**3,337.5**	**2,587.0**
PCC Temperature	°F	OMA	1,752	1,709	1,675	1,770	1,707	1,657	1,757	1,712	1,610	1,760	1,709	1,647
SCC Temperature	°F	OMA	1,909	1,885	1,867	1,931	1,885	1,842	1,923	1,884	1,864	1,921	1,885	1,858
Baghouse Inlet Temperature[4]	°F	OMA	430	419	395	433	421	380	436	420	385	433	420	386
CO, Corrected to 7% O_2	ppmvd	OMA	0.00	0.00	0.00	0.00	0.00	0.00	0.00	0.00	0.00	0.00	0.00	0.00

[1] Process data are the averages for the duration of the emissions sampling run for Dioxins/Furans in stack.

[2] Containerized Waste Feedrate includes the spikes of hexachloroethane, lead nitrate, and mercuric nitrate solution.

[3] Total Waste Feedrate and Total Pumpable Waste Feedrate, maximum, average, and minimum, includes the average chromic acid solution feedrate.

[4] Measured as the SDA (Spray Dryer/Absorber) Outlet Temperature.

Note: Values in bold used to develop OPL.

Table 2-9. Unit 4 – Summary of Process Data[1] and Feedrates During the EPA Method 5 Stack Sampling for PM

Operating Parameter	Units	Basis	Run 1 10-23-13 09:30 - 10:42			Run 3 10-25-13 09:35 - 10:40			Run 4 10-25-13 10:50 - 11:55			Average		
			Max	Avg	Min	Max	Avg	Min	Max	Avg	Min	Max	Avg	Min
Stack Gas Flowrate	ACFM	HRA	37,755	37,632	37,333	37,997	37,824	37,479	37,647	36,949	36,518	37,800	37,468	37,110
Low-Btu Liquid Waste to Kiln Feedrate	lb/hr	OMA	2,080.6	1,899.6	1,646.9	2,180.2	1,901.0	1,730.0	1,957.9	1,896.8	1,807.7	2,072.9	1,899.2	1,728.2
High-Btu Liquid Waste to Kiln Feedrate	lb/hr	OMA	1,124.8	1,101.4	1,081.3	1,403.2	1,098.1	1,010.0	1,200.5	1,108.9	996.8	1,242.8	1,102.8	1,029.4
Liquid Waste to SCC Feedrate	lb/hr	OMA	1,185.5	1,095.6	1,003.0	1,158.5	1,100.7	1,026.9	1,153.8	1,102.8	1,068.8	1,166.0	1,099.7	1,032.9
Containerized Solids Waste Feedrate	lb/hr	OMA	565.8			568.6			553.8			562.8		
Bulk Solids Waste Feedrate	lb/hr	OMA	6,286.7			6,408.0			5,992.6			6,229.1		
Ash Feedrate	lb/hr	OMA	4,806.0			4,835.6			4,689.9			4,777.2		
PCC Temperature	°F	OMA	1,631	1,591	1,537	1,623	1,574	1,503	1,601	1,559	1,508	1,618	1,575	1,516
SCC Temperature	°F	OMA	1,909	1,885	1,866	1,905	1,886	1,863	1,896	1,882	1,870	1,903	1,884	1,866
CO, Corrected to 7% O_2	ppmvd	OMA	**0.33**	**0.14**	**0.00**	**0.26**	**0.09**	**0.00**	**0.21**	**0.08**	**0.00**	**0.27**	**0.10**	**0.00**
Baghouse Inlet Temperature[2]	°F	OMA	402	398	392	403	397	391	407	401	396	404	399	393
Carbon Injection Rate	lb/hr	OMA	6.7	6.2	5.9	6.7	6.2	5.9	7.0	6.2	5.7	6.8	6.2	5.8

[1] Process data are the averages for the duration of the emissions sampling run for particulate matter in stack.

[2] Measured as the SDA (Spray Dryer/Absorber) Outlet Temperature

Note: Values in bold used to develop OPL

Table 2-10. Unit 4 – Summary of Process Data[1] and Feedrates During the Modified EPA Method 26A Stack Sampling for HCl/Cl_2

Operating Parameter	Units	Basis	Run 1 10-23-13 12:36 - 13:36			Run 2 10-24-13 12:35 - 13:35			Run 3 10-25-13 13:35 - 14:35			Average		
			Max	Avg	Min	Max	Avg	Min	Max	Avg	Min	Max	Avg	Min
Stack Gas Flowrate	acfm	HRA	38,042	37,935	37,857	37,265	37,170	37,063	36,872	36,754	36,572	37,393	37,286	37,164
Low-Btu Liquid Waste to Kiln Feedrate	lb/hr	OMA	2,105.9	1,943.7	0.0	2,057.1	1,996.5	1,863.0	2,068.1	1,999.6	1,942.1	2,077.0	1,980.0	1,268.4
High-Btu Liquid Waste to Kiln Feedrate	lb/hr	OMA	1,224.9	1,167.0	0.0	1,230.8	1,205.4	1,172.2	1,294.3	1,201.0	1,094.0	1,250.0	1,191.2	755.4
Liquid Waste to SCC Feedrate	lb/hr	OMA	1,261.5	1,165.6	0.0	1,240.6	1,203.1	1,126.5	1,238.0	1,196.3	1,171.4	1,246.7	1,188.3	766.0
Containerized Solids Waste Feedrate[2]	lb/hr		860.0			857.0			843.0			853.3		
Bulk Solids Waste Feedrate	lb/hr		6,093.0			5,448.0			5739.0			5,760.0		
Total Chlorine Feedrate	lb/hr		203.0			203.5			203.2			203.2		
Sorbent Feedrate	Lb/lb Cl_2	HRA	2.23			2.07			2.07			2.13		
Carrier Fluid Flowrate	Gal/lb Cl_2	HRA	3.16			3.07			3.07			3.10		
PCC Temperature	°F	OMA	1,635	1,589	1,493	1,623	1,569	1,507	1,567	1,513	1,460	1,609	1,557	1,487
SCC Temperature	°F	OMA	1,909	1,883	1,801	1,901	1,880	1,838	1,905	1,878	1,847	1,905	1,880	1,828
CO, Corrected to 7% O_2	ppmvd	OMA	**0.23**	**0.08**	**0.00**	**0.21**	**0.06**	**0.00**	**0.27**	**0.09**	**0.00**	**0.24**	**0.08**	**0.00**
Baghouse Inlet Temperature[3]	°F	OMA	409	398	383	403	399	393	406	400	392	406	399	389
Carbon Injection Rate	lb/hr	OMA	6.7	6.0	0.0	6.5	6.2	6.1	6.7	6.2	6.0	6.6	6.1	4.0

[1] Process data are the averages for the duration of the emissions sampling run for HCl/Cl_2 in stack.

[2] Containerized Waste Feedrate includes the spikes of hexachloroethane, lead nitrate, and mercuric nitrate solution.

[3] Measured as the SDA (Spray Dryer/Absorber) Outlet Temperature.

Note: Values in bold used to develop OPL.

Table 2-11. Unit 4 – Summary of Process Data[1] and Feedrates During the EPA Method 29 Stack Sampling for Metals

Operating Parameter	Units	Basis	Run 1 10-23-13 12:36 - 15:20			Run 2 10-24-13 12:35 - 15:15			Run 3 10-25-13 13:35 - 16:11			Average		
			Max	Avg	Min	Max	Avg	Min	Max	Avg	Min	Max	Avg	Min
Stack Gas Flowrate	acfm	HRA	38,042	37,659	37,010	37,267	37,087	36,864	38,297	37,199	36,572	37,869	37,315	36,815
Low-Btu Liquid Waste to Kiln Feedrate	lb/hr	OMA	2,105.9	1,978.5	0.0	2,113.9	1,986.6	1,711.7	2,072.2	1,999.0	1,939.2	2,097.3	1,988.0	1,217.0
High-Btu Liquid Waste to Kiln Feedrate	lb/hr	OMA	1,232.7	1,189.2	0.0	1,239.1	1,201.2	1,159.0	1,340.2	1,201.8	1,094.0	1,270.7	1,197.4	751.0
Liquid Waste to SCC Feedrate	lb/hr	OMA	1,261.5	1,186.2	0.0	1,240.6	1,201.5	1,077.4	1,238.0	1,196.2	1,167.1	1,246.7	1,194.6	748.1
Containerized Solids Waste Feedrate[2]	lb/hr		862.7			849.0			856.5			856.1		
Bulk Solids Waste Feedrate	lb/hr		5,251.5			5,598.4			5345.0			5,398.3		
SVM Feedrate	lb/hr		62.2			61.6			62.2			62.0		
LVM Feedrate - Total	lb/hr		46.2			46.3			46.0			46.2		
LVM Feedrate - Pumpable	lb/hr		46.0			46.0			45.8			45.9		
Mercury Feedrate	lb/hr		0.0402			0.0400			0.0403			0.0402		
Total Chlorine Feedrate	lb/hr		205.3			204.1			205.5			205.0		
Baghouse Inlet Temperature[3]	°F	OMA	409	399	383	409	399	390	410	399	388	410	399	387
Carbon Injection Rate	lb/hr	OMA	6.7	6.1	0.0	6.7	6.2	5.9	6.9	6.2	5.9	6.8	6.2	3.9
PCC Temperature	°F	OMA	1,666	1,582	1,493	1,623	1,571	1,507	1,602	1,525	1,460	1,631	1,559	1,487
SCC Temperature	°F	OMA	1,928	1,885	1,801	1,901	1,879	1,838	1,912	1,879	1,831	1,914	1,881	1,823
CO, Corrected to 7% O_2	ppmvd	OMA	0.23	0.08	0.00	0.21	0.06	0.00	0.27	0.08	0.00	0.24	0.07	0.00

[1] Process data are the averages for the duration of the emissions sampling run for metals in stack.

[2] Containerized Waste Feedrate includes the spikes of hexachloroethane, lead nitrate, and mercuric nitrate solution.

[3] Measured as the SDA (Spray Dryer/Absorber) Outlet Temperature.

Note: Values in bold used to develop OPL.

Table 2-12. Unit 4 – Summary of Process Data[1] and Feedrates During the SW-846 Method 0023A Stack Sampling for Dioxins/Furans

Operating Parameter	Units	Basis	Run 1 10-23-13 12:36 - 15:50			Run 2 10-24-13 12:35 - 15:45			Run 3 10-25-13 13:35 - 16:41			Average		
			Max	Avg	Min	Max	Avg	Min	Max	Avg	Min	Max	Avg	Min
Stack Gas Flowrate	ACFM	HRA	38,042	37,547	36,881	37,267	37,028	36,454	38,297	37,325	36,572	37,869	37,300	36,635
Low-Btu Liquid Waste to Kiln Feedrate	lb/hr	OMA	2,105.9	1,982.8	0.0	2,113.9	1,950.9	1,711.7	2,072.2	1,998.3	1,939.2	2,097.3	1,977.4	1,217.0
High-Btu Liquid Waste to Kiln Feedrate	lb/hr	OMA	1,232.7	1,190.9	0.0	1,239.1	1,201.0	1,159.0	1,340.2	1,200.9	1,094.0	1,270.7	1,197.6	751.0
Liquid Waste to SCC Feedrate	lb/hr	OMA	1,261.5	1,187.5	0.0	1,240.6	1,201.3	1,077.4	1,238.0	1,196.9	1,167.1	1,246.7	1,195.2	748.1
Containerized Solids Waste Feedrate[2]	lb/hr		862.6			841.6			854.2			852.8		
Bulk Solids Waste Feedrate	lb/hr		5,322.4			5,090.8			5,284.2			5,232.5		
Total Waste Feedrate to PCC[3]	lb/hr	HRA	10,621.4	**9,551.1**	**7,192.1**	10,662.8	**9,512.7**	**7,097.6**	10,610.4	**9,407.6**	**6,913.6**	10,631.5	9,490.5	7,067.8
Total Pumpable Waste Feedrate to PCC[3]	lb/hr	HRA	3,466.7	**3,418.2**	**3,095.1**	3,465.0	**3,430.7**	**3,151.6**	3,473.2	**3,447.0**	**3,129.6**	3,468.3	**3,432.0**	**3,125.4**
Total Waste Feedrate to SCC (Pumpable)	lb/hr	HRA	1,201.9	**1,184.2**	**1,078.0**	1,207.0	**1,197.8**	**1,082.2**	1,199.5	**1,192.4**	**1,077.6**	1,202.8	1,191.5	1,079.3
PCC Temperature	°F	OMA	1,666	1,580	1,493	1,626	1,575	1,507	1,602	1,527	1,460	1,632	1,561	1,487
SCC Temperature	°F	OMA	1,928	1,885	1,801	1,910	1,881	1,838	1,912	1,879	1,831	1,917	1,881	1,823
Baghouse Inlet Temperature[4]	°F	OMA	410	400	383	409	399	390	413	399	388	411	399	387
Carbon Injection Rate	lb/hr	OMA	6.8	6.2	0.0	7.1	6.2	5.9	6.9	6.2	5.9	6.9	6.2	3.9
CO, Corrected to 7% O_2	ppmvd	OMA	0.23	0.07	0.00	0.21	0.06	0.00	0.27	0.08	0.00	0.24	0.07	0.00

[1] Process data are the averages for the duration of the emissions sampling run for Dioxins/Furans in stack.

[2] Containerized Waste Feedrate includes the spikes of hexachloroethane, lead nitrate, and mercuric nitrate solution.

[3] Total Waste Feedrate to PCC and Total Pumpable Waste Feedrate to PCC, maximum, average, and minimum, include the average chromic acid solution feedrate.

[4] Measured as the SDA (Spray Dryer/Absorber) Outlet Temperature.

Note: Values in bold used to develop OPL.

Table 2-13. Unit 2 – Chlorine Spiking Rates During the HCl/Cl_2 Stack Sampling

Spiking Constituent	Spiking Rate (lbs/hr)			
	Target	Run 1 10-8-13 15:40 - 16:40	Run 3 10-10-13 12:30 - 13:30	Run 5 10-30-13 12:45 - 13:45
Chlorine	200 – 250	197.9	203.1	197.9

Table 2-14. Unit 3 – Chlorine Spiking Rates During the HCl/Cl_2 Stack Sampling

Spiking Constituent	Spiking Rate (lbs/hr)			
	Target	Run 2 10-16-13 14:00 - 15:00	Run 3 10-17-13 12:30 - 13:33	Run 4 10-18-13 09:35 - 10:35
Chlorine	200 – 250	203.1	203.3	197.9

Table 2-15. Unit 4 – Chlorine Spiking Rates During the HCl/Cl_2 Stack Sampling

Spiking Constituent	Spiking Rate (lbs/hr)			
	Target	Run 1 10-23-13 12:36 - 13:36	Run 2 10-24-13 12:35 - 13:35	Run 3 10-25-13 13:35 - 14:35
Chlorine	200 – 250	197.9	197.9	197.9

Table 2-16. Unit 2 – Spiking Rates During the Metals Stack Sampling

Spiking Constituent	Spiking Rate (lbs/hr)			
	Target	Run 1 10-8-13 15:40 - 18:43	Run 3 10-10-13 12:30 - 15:10	Run 5 10-30-13 12:45 - 15:32
Chromium	40 – 45	45.8	47.3	45.8
Lead	60 – 65	61.9	61.7	62.0
Mercury	0.001 – 0.003	0.00196	0.00196	0.00204
Chlorine	200 – 250	199.7	199.2	200.2

Table 2-17. Unit 3 – Spiking Rates During the Metals Stack Sampling

Spiking Constituent	Spiking Rate (lbs/hr)			
	Target	Run 2 10-16-13 14:00 - 16:50	Run 3 10-17-13 12:30 - 15:25	Run 4 10-18-13 09:35 - 12:20
Chromium	40 – 45	46.3	46.1	45.7
Lead	60 – 65	62.1	62.5	62.2
Mercury	0.001 – 0.003	0.00204	0.00200	0.00209
Chlorine	200 – 250	200.3	201.7	200.7

Table 2-18. Unit 4 – Spiking Rates During the Metals Stack Sampling

Spiking Constituent	Spiking Rate (lbs/hr)			
	Target	Run 1 10-23-13 12:36 - 15:20	Run 2 10-24-13 12:35 - 15:15	Run 3 10-25-13 13:35 - 16:11
Chromium	40 – 45	46.0	46.0	45.8
Lead	60 – 65	62.0	61.1	62.0
Mercury	0.02 – 0.06	0.0393	0.0388	0.0394
Chlorine	200 – 250	200.0	197.2	200.3

Table 2-19. Unit 2 – Analytical Results for the Chromium Spiking Solution

Chromium	Run 1		Run 3		Run 5	
	COA Concentration	Analytical Result	COA Concentration	Analytical Result	COA Concentration	Analytical Result
	(mg/kg)		(mg/kg)		(mg/kg)	
Beginning of Method 29 Sample	178,881	178,000	178,871	178,000	178,881	174,000
Middle of Method 29 Sample		172,000		174,000		173,000
End of Method 29 Sample		169,000		178,000		170,000

Table 2-20. Unit 2 – Analytical Results for the Mercury Spiking Solution

Mercury	Run 1		Run 3		Run 5	
	Calculated Concentration	Analytical Result	Calculated Concentration	Analytical Result	Calculated Concentration	Analytical Result
	(µg/ml)	(mg/kg)	(µg/ml)	(mg/kg)	(µg/ml)	(mg/kg)
Beginning of Method 29 Sample	2,323	1,960	2,323	2,370	2,323	2,210
Middle of Method 29 Sample		2,050		2,150		2,120
End of Method 29 Sample		2,390		1,950		2,250

Table 2-21. Unit 3 – Analytical Results for the Chromium Spiking Solution

Chromium	Run 2		Run 3		Run 4	
	COA Concentration	Analytical Result	COA Concentration	Analytical Result	COA Concentration	Analytical Result
	(mg/kg)		(mg/kg)		(mg/kg)	
Beginning of Method 29 Sample	179,137	176,000	179,137	176,000	179,137	176,000
Middle of Method 29 Sample		173,000		179,000		172,000
End of Method 29 Sample		177,000		174,000		173,000

Table 2-22. Unit 3 – Analytical Results for the Mercury Spiking Solution

Mercury	Run 2		Run 3		Run 4	
	Calculated Concentration	Analytical Result	Calculated Concentration	Analytical Result	Calculated Concentration	Analytical Result
	(µg/ml)	(mg/kg)	(µg/ml)	(mg/kg)	(µg/ml)	(mg/kg)
Beginning of Method 29 Sample	2,323	2,420	2,323	2,460	2,323	2,480
Middle of Method 29 Sample		2,380		2,390		2,500
End of Method 29 Sample		2,380		2,480		2,480

Table 2-23. Unit 4 – Analytical Results for the Chromium Spiking Solution

Chromium	Run 1		Run 2		Run 3	
	COA Concentration	Analytical Result	COA Concentration	Analytical Result	COA Concentration	Analytical Result
	(mg/kg)		(mg/kg)		(mg/kg)	
Beginning of Method 29 Sample	179,137	171,000	179,137	173,000	179,009	169,000
Middle of Method 29 Sample		175,000		172,000		172,000
End of Method 29 Sample		169,000		174,000		176,000

Table 2-24. Unit 4 – Analytical Results for the Mercury Spiking Solution

Mercury	Run 1		Run 2		Run 3	
	Calculated Concentration	Analytical Result	Calculated Concentration	Analytical Result	Calculated Concentration	Analytical Result
	(µg/ml)	(mg/kg)	(µg/ml)	(mg/kg)	(µg/ml)	(mg/kg)
Beginning of Method 29 Sample	23,228	21,300	23,228	19,700	23,228	22,000
Middle of Method 29 Sample		18,700		19,900		21,300
End of Method 29 Sample		19,300		21,000		21,400

3.0 Sampling, Analysis, and Monitoring Procedures

The subsequent CPT was performed at one test condition on each of the three incinerators to demonstrate system performance and to establish appropriate operating parameter limits (OPLs) for all of the applicable standards of the HWC MACT. The CPT included three replicate sampling runs on each incinerator at the one test condition. Table 3-1 summarizes the parameters that were measured during the test of each of the three incinerators and the frequency of measurement. The CPT was conducted in accordance with the comprehensive performance test plans for Units 2, 3, and 4 (i.e. the CPT Plan) and Quality Assurance Project Plan (QAPjP) dated September 25, 2013 that were approved by EPA Region 5.

3.1 Sampling Locations and Procedures

Samples were collected of solid, liquid, and gas streams during the CPT. Table 3-2 summarizes the sampling methods for each stream and the parameters that were determined. Refer to the QAPjP for more detailed descriptions of the methods and the quality control activities for each method. Section 5.0 presents a discussion of the QA/QC activities performed for the CPT.

3.1.1 Liquids Sampling Procedures

Samples of the liquid waste feeds were collected every 15 minutes during each of the three runs of the CPT for each of the three incinerators beginning at the start of stack sampling through completion of stack sampling for both the first and second parts of the CPT. Individual samples (i.e., sub-samples) were collected every 15 minutes throughout the test, and composited for analysis.

Samples of the liquid waste feeds were collected at 15-minute intervals during the collection of the Method 5 sampling train of the first part of each run of the test, and during the collection of the Modified Method 26A, Method 29, and Method 0023A sampling trains of the second part of each run of the test. Composite samples were prepared of the samples collected during each of the Method 5, Modified Method 26A, Method 29, and Method 0023A sampling times. All of the composite liquid waste feed samples from the first part and the second part of the CPT were analyzed for ash, total chlorine, heat content, moisture, density, and viscosity. The composite liquid waste feed samples collected during the Method 29 stack sampling were also analyzed for metals (arsenic, beryllium, chromium, cadmium, lead, and mercury).

In addition to the collection of sub-samples every 15 minutes of the liquid wastes, individual samples were collected and archived for further analysis, if required.

Samples of the chromium and mercury spiking solutions were collected in each run of the second part of the test of each incinerator. At the beginning, middle (at port change), and end of the Method 29 sampling of the second part of the test, samples of the chromium and mercury spiking solutions were collected. The individual samples of the chromium and mercury spiking solutions collected during each Method 29 sampling run of the test of each incinerator were analyzed for chromium or mercury, respectively. A fourth sample of the chromium and mercury spiking solutions was collected at the completion of the Method 0023A sampling train. This fourth sample was archived (i.e., not analyzed).

Liquid waste samples were collected upstream of any metal spiking location. Split samples of the composite liquid waste feed and the chromium and mercury spiking solutions from one run were taken by the Illinois EPA and/or U.S. EPA Region 5.

Table 3-1. Measurement Frequency

Stream/Parameters	Sample Frequency for the Subsequent CPT	
	First Part	Second Part
Liquid Waste Feed		
Ash	3	3
Chlorine	3	3
Moisture	3	3
Heating Value	3	3
Viscosity, Density	3	3
Metals		3[1]
Solid Waste Feed – Containerized and Bulk (Unit 4)		
Ash	3	3
Chlorine	3	3
Moisture	3	3
Heating Value	3	3
Metals		3[1]
Spiking Materials[2]		
Mercury Spiking Solution		3
Lead Solid Spiking Material		3
Chromium Spiking Solution		3
Chlorine Solid Spiking Material (if spiked)		3
Stack Gas		
Metals		3[1]
Particulate Matter	3	
HCl/Cl_2		3
Dioxins/Furans		3
CO_2, O_2	Continuous	Continuous[3]
Total Hydrocarbons		Continuous[3]
Moisture	Concurrent with isokinetic sampling	Concurrent with isokinetic sampling
CO, O_2[4]	Continuous	Continuous

[1] Analysis is for As, Be, Cd, Cr, Pb, and Hg .

[2] Each collected sample of the mercury and chromium spiking solutions were analyzed for the target spiking metal. Samples of the lead and chlorine spiking materials were archived.

[3] Allowing for hourly calibration of the THC monitor.

[4] Plant monitors.

Table 3-2. Sampling Methods

Stream	Sampling Method	Sampling Frequency	Compositing Approach	Analytical Parameters
Liquid Waste Feed Units 2 and 3 - Low-Btu - High-Btu - Liquid (Specialty) Waste Unit 4 - Low-Btu to Kiln - High-Btu to Kiln - Liquid Waste to SCC	Tap (Method S004)	First part of the test condition - Every 15 Minutes During Method 5 sampling Second part of the test condition - Every 15 Minutes During Modified Method 26A, Method 29, and Method 0023A sampling	Subsamples from each test period composited	Ash Chlorine Moisture Heating Value Density Viscosity Metals[1]
Solid Waste Feed Units 2 and 3 - Containerized Unit 4 - Containerized - Bulk	Grab or Scoop (Method S007) – Solids	First part of the test condition - Every 15 Minutes During Method 5 sampling Second part of the test condition - Every 15 Minutes During Modified Method 26A, Method 29, and Method 0023A sampling	Subsamples from each test period composited	Ash Chlorine Moisture Heating Value Metals[1]
Chromium Spiking Solution	Tap (Method S004)	Second part of the test condition - Beginning, middle, and end of Method 29 sampling End of Method 0023A sampling	Subsamples collected during Method 29 sampling analyzed Subsample collected at end of Method 0023A sampling archived	Chromium
Mercury Spiking Solution	Grab	Second part of the test condition - Beginning, middle, and end of Method 29 sampling End of Method 0023A sampling	Subsamples collected during Method 29 sampling analyzed Subsample collected at end of Method 0023A sampling archived	Mercury

Table 3-2. (continued) Sampling Methods

Stream	Sampling Method	Sampling Frequency	Compositing Approach	Analytical Parameters
Lead and Chlorine Spiking Materials	Grab	Second part of the test condition - Beginning, middle, and end of Method 29 sampling End of Method 0023A sampling	None – Archive	Archive
Stack Gas	EPA Method 2	Concurrent with isokinetic sampling for EPA Methods 5, 29, and SW-846 Method 0023A	NR	Flowrate
	EPA Method 3A	Concurrent with isokinetic sampling – First and Second Parts of the Test	NR	O_2, CO_2
	EPA Method 4	Concurrent with isokinetic sampling – First and Second Parts of the Test	NR	Moisture
	EPA Method 5	1+ hour collected isokinetically – First Part of the Test	NR	PM
	Modified EPA Method 26A	1+ hour collected isokinetically at single point – Second Part of the Test	NR	HCl/Cl_2
	EPA Method 29	2+ hour collected isokinetically - Second Part of the Test	NR	Metals [1]
	SW-846 Method 0023A	3+ hour collected isokinetically - Second Part of the Test	NR	Dioxins/Furans
	EPA Method 25A	Concurrent with isokinetic sampling – Second Part of the Test	NR	THC
	Plant CEMS	Continuous	NR	CO, O_2

[1] Analysis for As, Be, Cd, Cr, Pb, and Hg only in samples from the second part of the test condition collected during Method 29 stack sampling.

NR = Not Required

3.1.2 Solids Sampling Procedures

Samples of the containerized solid waste feed fed to Units 2, 3, and 4, and the bulk solids fed to Unit 4, were collected every 15 minutes during the collection of the Method 5 sampling train of the first part of each run of the test, and during the collection of the Modified Method 26A, Method 29, and Method 0023A sampling trains of the second part of each run of the test. Composite samples were prepared of the samples collected during each of the Method 5, Modified Method 26A, Method 29, and Method 0023A sampling times. All of the composite solid waste feed samples from the first part and the second part of the CPT were analyzed for ash, total chlorine, heat content, and moisture. The composite solid waste feed samples collected during the Method 29 stack sampling were also analyzed for metals (arsenic, beryllium, chromium, cadmium, lead, and mercury).

In addition to the collection of sub-samples every 15 minutes of the solid wastes, individual samples were collected and archived for further analysis, if required.

Spikes of solid lead and chlorine were added to the containerized solid waste in the test of each incinerator. Samples of the lead (as lead nitrate) and the chlorine (as hexachloroethane) were collected during the Method 29 stack sampling in the second part of the test. Three grab samples of the chlorine and lead spiking materials were collected at the beginning, middle (at port change), and end of the Method 29 sampling of the second part of the test. A fourth sample of the lead and chlorine spiking materials was collected at the completion of the Method 0023A sampling train in the second part of the test. All samples of the lead and chlorine spiking materials were archived (i.e., not analyzed). Samples of the composite solid waste feeds and the chlorine and lead spiking solutions from one run were taken by the Illinois EPA and/or U.S. EPA Region 5.

3.1.3 Stack Gas Sampling Procedures

Stack gas emissions were sampled for determination of the parameters indicated in Tables 5-1 and 5-2. The stack samples collected using isokinetic sampling methods were particulate matter by EPA Method 5, HCl and Cl_2 using a Modified Method 26A, metals by EPA Method 29, and dioxins/furans by SW-846 Method 0023A. Table 3-3, Table 3-4, and Table 3-5 present summaries of the sampling data for the isokinetic sampling trains for the CPT testing of Unit 2, Unit 3, and Unit 4, respectively.

Table 3-3. Unit 2 – Summary of Isokinetic Sampling

Run	Analytical Parameter	Date	Time	Average Stack Temperature (°F)	Velocity (ft/sec)	Flue Gas Moisture (%)	O_2 (vol %)	CO_2 (vol %)	Avg Flowrate (acfm)	Avg Flowrate (dscfm)	Volume at Meter (dscf)	Isokinetic Sampling Rate (%)
1	PM	10-8-13	11:50-13:00	390	30.50	41.2	11.56	6.35	14,796	5,395	40.815	97.9
	HCl/Cl_2		15:40-16:40	391	29.97	45.1	10.08	7.95	14,537	4,942	37.384	103.5
	Metals		15:40-18:43	389	31.41	45.5	10.08	7.95	15,235	5,156	84.952	107.1
	Dioxins/Furans		15:40-18:55	387	30.05	44.7	10.08	7.95	14,578	5,017	121.164	104.6
2	PM	10-9-13	09:45-10:53	390	31.07	41.6	11.23	6.56	15,070	5,451	42.356	100.5
3	PM	10-10-13	09:15-10:23	391	30.42	42.0	11.48	6.28	14,753	5,287	41.278	101.0
	HCl/Cl_2		12:30-13:30	396	31.95	45.9	10.38	7.50	15,498	5,150	37.290	99.0
	Metals		12:30-15:10	393	31.36	45.8	10.38	7.50	15,212	5,081	78.951	101.0
	Dioxins/Furans		12:30-15:40	396	32.05	45.3	10.38	7.50	15,544	5,225	119.568	99.1
5	HCl/Cl_2	10-30-13	12:45-13:45	392	31.21	43.8	10.50	7.25	15,138	5,225	36.879	96.1
	Metals		12:45-15:32	386	31.06	43.8	10.50	7.25	15,064	5,236	79.607	97.9
	Dioxins/Furans		12:45-16:02	389	33.10	42.9	10.50	7.25	16,056	5,650	124.921	95.3

Table 3-4. Unit 3 – Summary of Isokinetic Sampling

Run	Analytical Parameter	Date	Time	Average Stack Temperature (°F)	Velocity (ft/sec)	Flue Gas Moisture (%)	O_2 (vol %)	CO_2 (vol %)	Avg Flowrate (acfm)	Avg Flowrate (dscfm)	Volume at Meter (dscf)	Isokinetic Sampling Rate (%)
1	PM	10-15-13	13:16-14:25	365	29.94	38.3	12.87	5.31	14,523	5,675	41.229	98.9
2	PM	10-16-13	11:15-12:25	366	30.75	36.2	13.38	4.96	14,916	6,034	42.461	96.2
	HCl/Cl_2		14:00-15:00	368	30.98	41.6	11.19	6.88	15,028	5,542	36.088	101.6
	Metals		14:00-16:50	367	30.68	43.5	11.19	6.88	14,882	5,319	71.708	103.6
	Dioxins/Furans		14:00-17:20	367	30.92	42.9	11.19	6.88	14,996	5,420	106.303	102.5
3	PM	10-17-13	09:50-10:57	368	30.66	41.0	11.74	6.02	14,870	5,549	41.921	103.3
	HCl/Cl_2		12:30-13:33	366	30.35	43.2	10.72	7.36	14,721	5,293	34.597	101.9
	Metals		12:30-15:25	367	30.22	44.5	10.72	7.36	14,658	5,150	69.016	102.9
	Dioxins/Furans		12:30-15:55	367	30.72	44.4	10.72	7.36	14,901	5,248	102.724	102.3
4	HCl/Cl_2	10-18-13	09:35-10:35	368	32.06	43.4	10.87	7.26	15,549	5,579	35.241	98.5
	Metals		09:35-12:20	368	31.52	44.1	10.87	7.26	15,292	5,414	71.540	101.5
	Dioxins/Furans		09:35-12:50	368	30.59	43.7	10.87	7.26	14,839	5,290	102.624	101.4

Table 3-5. Unit 4 – Summary of Isokinetic Sampling

Run	Analytical Parameter	Date	Time	Average Stack Temperature (°F)	Velocity (ft/sec)	Flue Gas Moisture (%)	O_2 (vol %)	CO_2 (vol %)	Avg Flowrate (acfm)	Avg Flowrate (dscfm)	Volume at Meter (dscf)	Isokinetic Sampling Rate (%)
1	PM	10-23-13	09:30-10:42	374	57.55	39.4	12.22	5.59	43,275	16,483	38.181	97.9
	HCl/Cl_2		12:36-13:36	377	60.30	39.6	12.27	5.86	45,345	17,157	39.935	99.1
	Metals		12:36-15:20	371	57.26	39.7	12.27	5.86	43,061	16,382	76.068	100.1
	Dioxins/Furans		12:36-15:50	370	55.12	39.2	12.27	5.86	41,455	15,919	110.791	100.7
2	HCl/Cl_2	10-24-13	12:35-13:35	377	57.91	38.6	12.37	5.74	43,550	16,824	39.264	99.3
	Metals		12:35-15:15	370	57.72	38.6	12.37	5.74	43,410	16,917	76.498	97.5
	Dioxins/Furans		12:35-15:45	370	55.32	38.3	12.37	5.74	41,598	16,284	112.803	100.3
3	PM	10-25-13	09:35-10:40	372	57.35	38.7	12.48	5.45	43,126	16,847	39.691	100.3
	HCl/Cl_2		13:35-14:35	378	54.66	39.3	12.00	5.96	41,102	15,796	37.034	99.8
	Metals		13:35-16:11	373	57.94	39.8	12.00	5.96	43,575	16,723	76.846	99.1
	Dioxins/Furans		13:35-16:41	374	56.95	39.3	12.00	5.96	42,829	16,550	115.284	100.8
4	PM	10-25-13	10:50-11:55	374	54.52	39.5	12.11	5.71	40,998	15,768	36.759	100.5

3.1.3.1 Sample Port Location

The Unit 2 and Unit 3 stacks are 90-feet high and have an inside diameter of 39 inches. There are two sets of two orthogonal ports located at two slightly different levels. Only the upper set of orthogonal ports are suitable for, and were used for, isokinetic sampling. An additional port located about four feet below the upper orthogonal ports, and about 45° between the orthogonal ports, was used for the Modified Method 26A sampling for HCl/Cl_2. The number of sampling points for the isokinetic sampling by Method 5, Method 29, and Method 0023A was determined in accordance with EPA Method 1.

The Unit 4 stack is 100-feet high and has an inside diameter of 48 inches. There are four orthogonal ports located at one level. An additional port located about four feet below the upper orthogonal ports, and about 45° between the orthogonal ports, was used for the Modified Method 26A sampling for HCl/Cl_2. The number of sampling points for the isokinetic sampling by Method 5, Method 29, and Method 0023A was determined in accordance with EPA Method 1.

3.1.3.2 EPA Methods 2 and 4 (Flowrate and Moisture)

Concurrent with the performance of the isokinetic sampling trains, measurements were made to determine gas velocity by 40 CFR Part 60, Appendix A, Method 2, and moisture by Method 4. The absence of cyclonic flow was determined by performing a cyclonic flow check, prescribed in EPA Method 2, prior to the CPT testing of each incinerator.

3.1.3.3 EPA Method 5 (PM)

Samples for the determination of particulate matter (PM) in stack emissions were collected in the first part of the tests of each incinerator using EPA Method 5. This sample train consisted of the following components:

- Glass (quartz) nozzle;
- Heated, glass (quartz)-lined probe;
- Heated filter with a Teflon filter support;
- Optional empty knockout impinger;
- Modified Greenburg-Smith impinger containing 100 mL of DI water;
- Greenburg-Smith impinger containing 100 mL of DI water;
- Empty Modified Greenburg-Smith impinger; and
- Modified Greenburg-Smith impinger containing silica gel.

The procedures specified in EPA Method 5 protocol were used to determine particulate matter. These procedures require the isokinetic extraction of particulate matter on a filter maintained at a controlled temperature between 223°F and 273°F. The particulate mass includes the mass

determined gravimetrically in the probe and nozzle rinse (PNR) with acetone, after evaporation and desiccation, and filter after desiccation.

3.1.3.4 Modified EPA Method 26A (HCl/Cl_2)

During the second part of the test of each incinerator, samples for the determination of HCl/Cl_2 in stack emissions were collected using a modification of EPA Method 26A proposed and approved by EPA Region 5. This sample train consisted of the following components:

- Glass (quartz) nozzle;
- Heated, glass (quartz)-lined probe;
- Heated Teflon mat filter with a Teflon® filter support;
- Teflon® transfer line;
- Optional empty knockout impinger;
- Greenburg-Smith impinger containing 100 mL of 0.1 N H_2SO_4;
- Greenburg-Smith impinger containing 100 mL of 0.1 N H_2SO_4;
- Modified Greenburg-Smith impinger containing 100 mL of 0.1 N NaOH;
- Modified Greenburg-Smith impinger containing 100 mL of 0.1 N NaOH; and
- Modified Greenburg-Smith impinger containing silica gel.

The procedures specified in EPA Method 5, as referenced in EPA Method 26A, were used for the isokinetic collection of the sample except that the sample was collected at a single point located at the center of the stack. A Teflon® union was used to connect the glass or quartz nozzle to the glass or quartz probe liner, and the filter and probe were kept at a temperature between 248°F and 273°F. A Teflon®-backed filter was used, as specified in EPA Method 26A.

3.1.3.5 EPA Method 29 (Metals)

Samples of the stack gas emissions were collected for the determination of metals during the second part of the test of each incinerator. The stack gas samples were collected isokinetically for the HWC MACT metals As, Be, Cd, Cr, Pb, and Hg using Method 29 from 40 CFR Part 60, Appendix A.

This method is basically an EPA Method 5 sampling train with some very specific modifications:

- Glass nozzle;
- Heated, glass-lined probe;
- Heated filter;

- Teflon® transfer line;
- Empty modified Greenburg-Smith impinger;
- Modified Greenburg-Smith impinger containing 100 mL of 5% HNO_3 and 10% H_2O_2;
- Greenburg-Smith impinger containing 100 mL of 5% HNO_3 and 10% H_2O_2;
- Empty modified Greenburg-Smith impinger;
- Modified Greenburg-Smith impinger containing 100 mL of 4% $KMnO_4$ and 10% H_2SO_4;
- Modified Greenburg-Smith impinger containing 100 mL of 4% $KMnO_4$ and 10% H_2SO_4; and
- Modified Greenburg-Smith impinger containing silica gel.

A Teflon® transfer line was used between the filter and the first impinger. This is done to address space limitations on the stack, to allow for ease in probe moving, and to minimize potential hazards moving the very large and heavy impinger box.

Following sampling, the probe and nozzle of the sampling train were recovered using a brush containing no metal using 0.1 normal nitric acid.

3.1.3.6 SW-846 Method 0023A (Dioxins/Furans)

Stack gas emissions were sampled isokinetically for dioxins/furans in the second part of the test of each incinerator using SW-846 Method 0023A.

The sampling train consists of the following components:

- Glass nozzle;
- Heated, glass-lined probe;
- Heated filter;
- Heated Teflon® transfer line;
- Sorbent module;
- Knock-out impinger;
- Greenburg-Smith impinger containing 100 mL water;
- Modified Greenburg-Smith impinger containing 100 mL water; and
- Modified Greenburg-Smith impinger containing silica gel.

From the heated filter, sample gas was passed through a heated Teflon® transfer line before entering the sorbent module. The sorbent module consisted of a water-cooled condenser and a

resin trap containing XAD-2® resin. The condenser is used to ensure that the gas entering the resin trap is below 68°F.

Isotopically-labeled dioxins/furans were spiked onto the XAD-2® resin both before field sampling (surrogate standards) and into appropriate places in the preparation prior to analysis after returning from the field.

3.1.3.7 Continuous Emissions Monitoring (THC, CO_2, CO and O_2)

CEMs were used to monitor the concentrations of total hydrocarbons (THC), carbon dioxide (CO_2), carbon monoxide (CO), and oxygen (O_2) in the stack gas.

CO, corrected to 7% O_2 is reported for the stack gases from permanent installation CEMS on each of the three incinerators. The concentrations of THC, CO_2, and O_2 in the stack gas were determined using EPA Methods 25A and 3A, respectively. CO_2 and O_2 were monitored using Method 3A to determine the stack gas composition (i.e., molecular weight) used to determine the flowrate of the stack gas, and to correct the stack sampling results to 7% oxygen. Both of these methods utilize continuous monitors.

3.2 Analysis Procedures

Samples collected during the CPT were analyzed for the parameters specified in Table 3-6. All analyses were performed by Test America Laboratories in Knoxville, TN. Analytical results for the waste feed samples are reported on an *as-received* or *wet weight* basis. Samples of the waste feed were not dried prior to analysis.

Table 3-6. Summary of Analytical Methods

Parameter	Stream	Analytical Method
Moisture	Stack Gas	EPA Method 4
Metals	Waste Feeds, Spiking Solutions, Stack Gas	ICPES - SW-846 Method 6010B CVAAS - Hg, SW-846 Method 7470A or 7471A
PM	Stack Gas	Gravimetric - EPA Method 5
HCl/Cl_2	Stack Gas	IC - EPA Method 26A
Dioxins/Furans	Stack Gas	HRGC/MS – SW-846 Method 8290A
Composition/Physical Parameters	Waste Feeds	EPA and/or ASTM Standard Methods

3.2.1 Composition and Physical Parameters Analysis

Samples of the waste feeds will be collected for determination of a number of chemical and physical parameters. Samples of the waste feeds were analyzed for the following parameters, by the referenced standard methods:

- Ash – ASTM Method ASTM D-482;
- Total Chlorine – SW-846 Methods 5050 and 9056A;
- Moisture – ASTM Method E-203 or D-4017(Karl-Fischer titration) for liquid waste, and ASTM Method D-5142 or D-160.3 (loss on drying) for solid waste;
- Calorific Value – ASTM Method D-5865 or D-240;
- Density – ASTM Method D-1475; and
- Viscosity – ASTM Method D-445.

3.2.2 Metals Analysis

Waste feed samples were analyzed for metals using a trace level inductively coupled argon plasma emission spectroscopy (ICPES) and atomic absorption spectroscopy. Samples were prepared for analysis using SW-846 Method 3050B. The metals analyzed by ICPES (SW-846 Method 6010B) are arsenic (As), beryllium (Be), cadmium (Cd), chromium (Cr), and lead (Pb). Mercury (Hg) was analyzed using Method 7471A of SW-846. Spiking solutions of chromium and mercury were analyzed for chromium and mercury, respectively.

The Method 29 sampling train used to collect samples of the stack gas for metals was analyzed using ICPES according to SW-846 Method 6010B for arsenic (As), beryllium (Be), cadmium (Cd), chromium (Cr), and lead (Pb), and mercury was analyzed using Method 7470A of SW-846.

3.2.3 PM Analysis

The PM concentration of the stack gas was determined following 40 CFR 60, Appendix A, Method 5 protocols. The wash from the nozzle, probe liner, and glassware prior to the filter (PNR) of the sampling train was evaporated, and the mass determined on an analytical balance. The filter recovered from the sampling train was desiccated, and weighed to determine the mass of particulate on the filter. The combined mass from the filter and the evaporated wash are used with the total volume of gas sampled to determine the particulate loading.

3.2.4 HCl/Cl_2 Analysis

The sulfuric acid and sodium hydroxide impinger catches and rinses from the Modified Method 26A sampling trains were analyzed for chloride ion concentrations using the analytical

approach specified in Method 26A. The Modified Method 26A sampling train was recovered to provide a rinse of the transfer line and contents and rinses of the acidic impingers (and knockout impinger) for determination of hydrogen chloride; and the contents and rinses of the alkaline impingers for determination of chlorine. Both were analyzed for chloride by ion chromatography (IC) for determination of chloride. The chloride found in the acid impingers (and rinses) is reported as HCl, and the chloride determined in the alkaline impingers (and rinses) is reported as Cl_2. Sodium thiosulfate was added to the collected alkaline impinger samples in the analytical laboratory before analysis.

3.2.5 Dioxins/Furans Analysis

Samples of the stack gas were collected using SW-846 Method 0023A, and were analyzed for dioxins/furans using SW-846 Method 8290A, high resolution gas chromatography (HRGC) with high resolution mass spectroscopy (HRMS) analytical technique. The analytical protocol includes quantitation of all dibenzodioxins and dibenzofurans including four or more chlorine atoms. The method provides congener class definition for each of the five congener groups (tetra-, penta-, hexa-, hepta-, and octa-). In addition, each individual isomer containing the 2,3,7,8-substitution pattern was individually quantified.

Dioxins/furans concentrations are reported for:

- Combination of the filter and all the rinses between the nozzle and filter; and
- Combination of the sorbent and all the rinses between the filter and sorbent.

3.3 Process Monitoring Procedures

The incinerator systems are monitored to ensure operation is in accordance with the permitted conditions. During the performance test, the automatic waste feed cutoff systems were operational; however, AWFCO limits in the current NOC were adjusted or disabled during the performance testing periods to allow target operations to be achieved. The CPT Plan prescribed a Continuous Monitoring System Performance Evaluation Test for each of the three incinerators. The Continuous Monitoring System Performance Evaluation Test Reports (CMSPETR) for the three incinerators are included as Appendix D. The raw process monitoring data from the CPT testing of each of the three incinerators are presented in Appendix C.

4.0 Results

This section presents the results of the comprehensive performance test of Veolia's incinerators at Sauget. The analytical results for the waste feed streams and stack gas are presented in Sections 4.1 and 4.2. The collection of samples and the methods used for sampling and analysis are specified in the CPT Plan and QAPjP.

Note that values presented in these tables (and throughout the report) are rounded to display an appropriate level of significance. All calculations are done with unrounded values, and therefore, it may not be possible to reproduce a calculated value exactly from the data shown in a table. It may be necessary to go to earlier tables, or the raw data in the appendices, to reproduce a calculated value exactly.

4.1 Waste Feedstreams

Four waste streams were sampled and analyzed in both the first part and the second part of each run of the CPT tests of Units 2 and 3, three liquid waste streams and one solid waste stream. All are fed to the primary combustion chamber (PCC). The streams sampled and analyzed are:

- Low-Btu Liquid Waste;
- High Btu Liquid Waste;
- Liquid (Specialty) Waste; and
- Containerized Solid Waste.

Five waste streams were sampled and analyzed in both the first part and the second part of each run of the CPT test of Unit 4, three liquid waste streams and two solid waste streams including two liquid wastes and two solid wastes that were fed to the kiln (i.e., the primary combustion chamber - PCC), and one liquid waste that was fed to the secondary combustion chamber (SCC). The streams sampled and analyzed are:

- Low-Btu Liquid Waste to Kiln;
- High Btu Liquid Waste to Kiln;
- Containerized Solid Waste;
- Bulk Solid Waste; and
- Liquid Waste to the SCC.

Composite samples were prepared of the samples collected during each of the Method 5 sampling time in the first part of each test, and the Modified Method 26A, Method 29, and

Method 0023A sampling times of the second part of each test. All of the composite liquid waste feed samples from the first part and the second part of the CPT tests were analyzed for ash, total chlorine, heat content, moisture, density, and viscosity. All of the composite solid waste feed samples from the first part and the second part of the CPT tests were analyzed for ash, total chlorine, heat content, and moisture. The composite liquid and solid waste feed samples collected during the Method 29 stack sampling were also analyzed for metals (arsenic, beryllium, chromium, cadmium, lead, and mercury).

Each sample was given a unique log number that identifies the project and unit, run number, and an identification code based upon the sample type and fraction. An example of the log number format follows:

Proj-XY-ABC

Where:

Proj is a project specific identification;
XY represent the condition and run number; and
ABC is an alphanumeric sequence describing the particular sample.

Here is a description of the sample codes used for the waste samples in the CPT.

VS2 (Veolia Sauget and unit number 2, 3, or 4) – Stream Code – Test Condition/Run Number/Part A or B – Sample Description

Stream Codes:

LWF	=	Liquid Waste Feed (to SCC Unit 4)
HBW	=	High-Btu Liquid Waste (to Kiln Unit 4)
LBW	=	Low-Btu Liquid Waste (to Kiln Unit 4)
CS	=	Containerized Solids (solids material sampled from the box containers)
BS	=	Bulk Solids (Unit 4 only)
CL	=	Chlorine Spiking Material (samples of the chlorine spiking material from the box containers)
PB	=	Lead Spiking Material (samples of the lead salts contained in the box containers)
HG	=	Mercury Spiking Material (samples of the vials containing the mercury spiking solution in the box containers)
CR	=	Chromium Spiking Solution

Test Condition/Run Number/Part A or B:

Test Condition is "1" for all samples and all runs.

Run Numbers typically are 1,2,& 3, however additional runs performed to replace aborted and/or repeated runs continue in sequence, 4, 5, etc.

Part A refers to the test segment associated with the PM emissions testing (i.e., the first part of the test).

Part B refers to the test segment associated with the HCl/Cl_2, Metals, and Dioxins/Furans emissions testing (i.e., the second part of the test).

Sample Description:

Waste and spiking material samples included individual grab samples for archiving, and composite samples specific to each emissions test period.

These are labeled as follows:

Individual grab samples are labeled with the suffix as:
-Grab 1, -Grab 2, -Grab 3, etc. in sequential order.

Composite samples were collected during each emissions sampling period and are represented by the following ID suffix:

- COMP1 = Composite sample collected during the PM emissions test period
- COMP2A = Composite sample collected during the HCl/Cl_2 emissions test period
- COMP2B = Composite sample collected during the Metals emissions test period
- COMP2C = Composite sample collected during the dioxins/furans emissions test period

Note that there should not be any COMP2A, B, or C samples labeled with a "–xxA-" run number, nor should there be any COMP1 samples with a "-xxB-" run number.

Examples:

VS2-HBW-15B-Grab 4 is the 4th grab sample of High-Btu liquid waste collected for archive during Run 5-Part B on Unit 2.

VS3-LWF-12A-COMP1 is the composite sample of the liquid waste feed collected for analysis during PM emissions Run 2 test period (Part A) on Unit 3.

Table 4-1 presents the analytical results for chlorine, ash, metals, heat content, moisture, density, and viscosity in the Low-Btu Liquid Waste fed to Unit 2.

Table 4-2 presents the analytical results for chlorine, ash, metals, heat content, moisture, density, and viscosity in the High-Btu Liquid Waste fed to Unit 2.

Table 4-3 presents the analytical results for chlorine, ash, metals, heat content, moisture, density, and viscosity in the Specialty Liquid Waste fed to Unit 2.

Table 4-4 presents the analytical results for chlorine, ash, metals, heat content, and moisture in the Containerized Solid Waste fed to Unit 2.

Table 4-5 presents the analytical results for chlorine, ash, metals, heat content, moisture, density, and viscosity in the Low-Btu Liquid Waste fed to Unit 3.

Table 4-6 presents the analytical results for chlorine, ash, metals, heat content, moisture, density, and viscosity in the High-Btu Liquid Waste fed to Unit 3.

Table 4-7 presents the analytical results for chlorine, ash, metals, heat content, moisture, density, and viscosity in the Specialty Liquid Waste fed to Unit 3.

Table 4-8 presents the analytical results for chlorine, ash, metals, heat content, and moisture in the Containerized Solid Waste fed to Unit 3.

Table 4-9 presents the analytical results for chlorine, ash, metals, heat content, moisture, density, and viscosity in the Low-Btu Liquid Waste fed to the kiln (PCC) of Unit 4.

Table 4-10 presents the analytical results for chlorine, ash, metals, heat content, moisture, density, and viscosity in the High-Btu Liquid Waste fed to the kiln (PCC) of Unit 4.

Table 4-11 presents the analytical results for chlorine, ash, metals, heat content, moisture, density, and viscosity in the Liquid Waste fed to the SCC of Unit 4.

Table 4-12 presents the analytical results for chlorine, ash, metals, heat content, and moisture in the Containerized Solid Waste fed to Unit 4.

Table 4-13 presents the analytical results for chlorine, ash, metals, heat content, and moisture in the Bulk Solid Waste fed to Unit 4.

The detailed analytical reports are presented in Appendix G1.

Table 4-1. Unit 2 – Analytical Results for Chlorine, Ash, Metals, and Physical Parameters in the Low-Btu Liquid Waste Feed

Analytical Parameter	Units	Run 1				Run 2	Run 3				Run 5		
		1 PM	2A HCl/Cl_2	2B Metals	2C Dioxins/ Furans	1 PM	1 PM	2A HCl/Cl_2	2B Metals	2C Dioxins/ Furans	2A HCl/Cl_2	2B Metals	2C Dioxins/ Furans
Chlorine	mg/kg	345	340	347	363	346	374	404	364	393	340	357	372
Ash	mg/kg	3,140	2,940	2,970	2,990	2,960	3,250	3,860	3,180	3,130	3,130	3,100	2,940
Arsenic	mg/kg	NA	NA	2.7	NA	NA	NA	NA	3.2	NA	NA	2.1	NA
Beryllium	mg/kg	NA	NA	<0.097	NA	NA	NA	NA	<0.096	NA	NA	<0.097	NA
Cadmium	mg/kg	NA	NA	7.2	NA	NA	NA	NA	9.0	NA	NA	7.0	NA
Chromium	mg/kg	NA	NA	0.8	NA	NA	NA	NA	0.88	NA	NA	0.74	NA
Lead	mg/kg	NA	NA	1.1	NA	NA	NA	NA	1.7	NA	NA	1.1	NA
Mercury	mg/kg	NA	NA	0.021	NA	NA	NA	NA	0.042	NA	NA	0.052	NA
Percent Water	%	98.1	98.0	98.2	98.3	97.9	98.4	97.5	96.6	98.2	99.9	99.0	99.2
Heating Value	Btu/lb	<130	<130	<130	<130	<130	<130	<130	<130	<130	<130	178	<130
Density	g/m^3	1.000	1.000	1.000	1.000	0.999	1.000	0.999	1.000	1.000	0.999	1.000	1.000
Viscosity	cSt	0.934	0.939	0.930	0.934	0.930	0.930	0.932	0.932	0.933	0.928	0.929	0.927

Table 4-2. Unit 2 – Analytical Results for Chlorine, Ash, Metals, and Physical Parameters in the High-Btu Liquid Waste Feed

Analytical Parameter	Units	Run 1				Run 2	Run 3				Run 5		
		1 PM	2A HCl/Cl_2	2B Metals	2C Dioxins/ Furans	1 PM	1 PM	2A HCl/Cl_2	2B Metals	2C Dioxins/ Furans	2A HCl/Cl_2	2B Metals	2C Dioxins/ Furans
Chlorine	mg/kg	7,070	6,960	7,140	7,240	7,180	3,780	3,260	3,210	3,330	3,500	3,580	3,450
Ash	mg/kg	1,350	1,030	1,100	1,040	1,010	1,180	557	582	551	2,080	1,210	1,350
Arsenic	mg/kg	NA	NA	8.3	NA	NA	NA	NA	2.8	NA	NA	<0.32	NA
Beryllium	mg/kg	NA	NA	<0.096	NA	NA	NA	NA	<0.099	NA	NA	<0.096	NA
Cadmium	mg/kg	NA	NA	<0.076	NA	NA	NA	NA	<0.078	NA	NA	<0.076	NA
Chromium	mg/kg	NA	NA	0.26	NA	NA	NA	NA	<0.22	NA	NA	<0.21	NA
Lead	mg/kg	NA	NA	1.0	NA	NA	NA	NA	0.67	NA	NA	6.7	NA
Mercury	mg/kg	NA	NA	0.026	NA	NA	NA	NA	0.021	NA	NA	0.096	NA
Percent Water	%	22.1	21.9	22.1	21.9	21.8	20.6	20.0	20.2	20.3	27.6	28.1	27.8
Heating Value	Btu/lb	9,090	9,000	9,040	9,050	9,040	9,120	9,160	9,130	9,150	8,630	8,630	8,660
Density	g/m^3	0.880	0.879	0.880	0.878	0.879	0.875	0.868	0.869	0.869	0.883	0.883	0.883
Viscosity	cSt	1.31	1.30	1.29	1.29	1.28	1.19	1.18	1.18	1.17	1.60	1.62	1.60

Table 4-3. Unit 2 – Analytical Results for Chlorine, Ash, Metals, and Physical Parameters in the Specialty Liquid Waste Feed

Analytical Parameter	Units	Run 1				Run 2	Run 3				Run 5		
		1 PM	2A HCl/Cl_2	2B Metals	2C Dioxins/ Furans	1 PM	1 PM	2A HCl/Cl_2	2B Metals	2C Dioxins/ Furans	2A HCl/Cl_2	2B Metals	2C Dioxins/ Furans
Chlorine	mg/kg	91.8	105	159	156	140	111	130	124	130	106	92.4	108
Ash	mg/kg	649	600	575	1,010	599	598	657	592	579	904	832	832
Arsenic	mg/kg	NA	NA	<0.32	NA	NA	NA	NA	<0.3	NA	NA	<0.31	NA
Beryllium	mg/kg	NA	NA	<0.096	NA	NA	NA	NA	<0.092	NA	NA	<0.093	NA
Cadmium	mg/kg	NA	NA	<0.076	NA	NA	NA	NA	<0.073	NA	NA	<0.073	NA
Chromium	mg/kg	NA	NA	<0.21	NA	NA	NA	NA	<0.2	NA	NA	<0.2	NA
Lead	mg/kg	NA	NA	<0.27	NA	NA	NA	NA	<0.26	NA	NA	<0.26	NA
Mercury	mg/kg	NA	NA	<0.009	NA	NA	NA	NA	<0.0086	NA	NA	<0.0099	NA
Percent Water	%	98.1	98.2	98.2	99.0	98.8	98.4	98.5	98.7	98.3	101.0	101.0	100.0
Heating Value	Btu/lb	<130	<130	<130	<130	<130	<130	<130	<130	<130	<130	<130	<130
Density	g/m^3	0.998	0.998	0.999	1.000	0.997	0.998	0.997	0.997	0.997	0.997	0.998	0.998
Viscosity	cSt	0.897	0.894	0.894	0.896	0.897	0.900	0.895	0.897	0.897	0.906	0.907	0.91

Table 4-4. Unit 2 – Analytical Results for Chlorine, Ash, Metals, and Physical Parameters in the Containerized Solids Waste Feed

Analytical Parameter	Units	Run 1				Run 2	Run 3				Run 5		
		1 PM	2A HCl/Cl_2	2B Metals	2C Dioxins/ Furans	1 PM	1 PM	2A HCl/Cl_2	2B Metals	2C Dioxins/ Furans	2A HCl/Cl_2	2B Metals	2C Dioxins/ Furans
Chlorine	mg/kg	288	184	167	237	284	433	345	499	267	346	396	351
Ash	mg/kg	675,000	785,000	708,000	676,000	688,000	655,000	657,000	634,000	637,000	732,000	688,000	703,000
Arsenic	mg/kg	NA	NA	8.8	NA	NA	NA	NA	7.5	NA	NA	8.8	NA
Beryllium	mg/kg	NA	NA	0.48	NA	NA	NA	NA	0.61	NA	NA	0.73	NA
Cadmium	mg/kg	NA	NA	0.082	NA	NA	NA	NA	<0.077	NA	NA	0.084	NA
Chromium	mg/kg	NA	NA	12.8	NA	NA	NA	NA	19.3	NA	NA	16.7	NA
Lead	mg/kg	NA	NA	11.6	NA	NA	NA	NA	11.7	NA	NA	13.5	NA
Mercury	mg/kg	NA	NA	0.045	NA	NA	NA	NA	0.022	NA	NA	0.016	NA
Percent Water	%	20.2	23.4	21.7	24.5	26.2	24.9	25.2	25.1	25.1	22.6	25.4	20.8
Heating Value	Btu/lb	<130	<130	<130	<130	<130	<130	<130	<130	<130	<130	<130	<130
Density	g/m^3	NA	NA	NA	NA	NA	NA	NA	NA	NA	NA	NA	NA
Viscosity	cSt	NA	NA	NA	NA	NA	NA	NA	NA	NA	NA	NA	NA

Table 4-5. Unit 3 – Analytical Results for Chlorine, Ash, Metals, and Physical Parameters in the Low-Btu Liquid Waste Feed

Analytical Parameter	Units	Run 1	Run 2				Run 3				Run 4		
		1 PM	1 PM	2A HCl/Cl_2	2B Metals	2C Dioxins/ Furans	1 PM	2A HCl/Cl_2	2B Metals	2C Dioxins/ Furans	2A HCl/Cl_2	2B Metals	2C Dioxins/ Furans
Chlorine	mg/kg	409	440	563	419	408	427	409	429	400	388	408	424
Ash	mg/kg	3,090	4,070	4,860	3,700	3,280	3,650	3,200	3,200	3,000	2,940	3,460	3,100
Arsenic	mg/kg	NA	NA	NA	4.8	NA	NA	NA	3.2	NA	NA	3.3	NA
Beryllium	mg/kg	NA	NA	NA	<0.096	NA	NA	NA	<0.097	NA	NA	<0.096	NA
Cadmium	mg/kg	NA	NA	NA	15.2	NA	NA	NA	9.4	NA	NA	11.3	NA
Chromium	mg/kg	NA	NA	NA	1.3	NA	NA	NA	0.87	NA	NA	0.97	NA
Lead	mg/kg	NA	NA	NA	3.1	NA	NA	NA	1.9	NA	NA	1.9	NA
Mercury	mg/kg	NA	NA	NA	0.065	NA	NA	NA	0.049	NA	NA	0.08	NA
Percent Water	%	101.0	99.8	99.3	99.8	100.0	98.2	99.3	100.0	99.2	99.7	99.5	99.9
Heating Value	Btu/lb	<130	173	361	256	158	462	209	181	213	154	<130	132
Density	g/m^3	1.000	1.000	1.000	1.000	0.999	1.000	1.000	1.000	1.000	1.000	1.010	1.000
Viscosity	cSt	0.932	0.931	0.933	0.932	0.935	0.935	0.940	0.933	0.937	0.935	0.932	0.934

Table 4-6. Unit 3 – Analytical Results for Chlorine, Ash, Metals, and Physical Parameters in the High-Btu Liquid Waste Feed

Analytical Parameter	Units	Run 1	Run 2				Run 3				Run 4		
		1 PM	1 PM	2A HCl/Cl_2	2B Metals	2C Dioxins/ Furans	1 PM	2A HCl/Cl_2	2B Metals	2C Dioxins/ Furans	2A HCl/Cl_2	2B Metals	2C Dioxins/ Furans
Chlorine	mg/kg	3,450	2,410	2,460	2,720	2,430	1,730	1,690	1,650	1,620	1,910	1,810	1,830
Ash	mg/kg	1,260	937	1,100	1,160	730	599	478	586	648	734	693	730
Arsenic	mg/kg	NA	NA	NA	12.4	NA	NA	NA	1.7	NA	NA	2.4	NA
Beryllium	mg/kg	NA	NA	NA	<0.095	NA	NA	NA	<0.1	NA	NA	<0.096	NA
Cadmium	mg/kg	NA	NA	NA	<0.075	NA	NA	NA	<0.079	NA	NA	<0.076	NA
Chromium	mg/kg	NA	NA	NA	<0.21	NA	NA	NA	<0.22	NA	NA	<0.21	NA
Lead	mg/kg	NA	NA	NA	1.8	NA	NA	NA	1.0	NA	NA	1.3	NA
Mercury	mg/kg	NA	NA	NA	0.027	NA	NA	NA	0.029	NA	NA	0.022	NA
Percent Water	%	24.0	23.9	23.9	24.1	24.0	23.3	23.0	23.0	23.1	25.2	25.2	25.4
Heating Value	Btu/lb	8,680	8,820	8,700	8,700	8,800	8,840	8,870	8,790	8,860	8,550	8,620	8,560
Density	g/m^3	0.879	0.878	0.877	0.877	0.878	0.874	0.874	0.873	0.874	0.879	0.879	0.880
Viscosity	cSt	1.33	1.30	1.30	1.31	1.30	1.28	1.26	1.27	1.26	1.35	1.35	1.36

Table 4-7. Unit 3 – Analytical Results for Chlorine, Ash, Metals, and Physical Parameters in the Specialty Liquid Waste Feed

Analytical Parameter	Units	Run 1	Run 2				Run 3				Run 4		
		1 PM	1 PM	2A HCl/Cl_2	2B Metals	2C Dioxins/ Furans	1 PM	2A HCl/Cl_2	2B Metals	2C Dioxins/ Furans	2A HCl/Cl_2	2B Metals	2C Dioxins/ Furans
Chlorine	mg/kg	188	174	1,480	696	587	111	101	125	112	113	127	92
Ash	mg/kg	591	622	917	713	733	588	520	520	521	648	620	606
Arsenic	mg/kg	NA	NA	NA	<0.32	NA	NA	NA	<0.32	NA	NA	<0.33	NA
Beryllium	mg/kg	NA	NA	NA	<0.098	NA	NA	NA	<0.096	NA	NA	<0.099	NA
Cadmium	mg/kg	NA	NA	NA	<0.077	NA	NA	NA	<0.076	NA	NA	<0.078	NA
Chromium	mg/kg	NA	NA	NA	<0.22	NA	NA	NA	<0.21	NA	NA	<0.22	NA
Lead	mg/kg	NA	NA	NA	<0.27	NA	NA	NA	<0.27	NA	NA	<0.28	NA
Mercury	mg/kg	NA	NA	NA	<0.0088	NA	NA	NA	<0.0094	NA	NA	<0.0099	NA
Percent Water	%	98.4	97.7	97.3	98.7	95.8	97.9	97.2	98.4	96.2	97.1	99.2	97.1
Heating Value	Btu/lb	<130	<130	<130	<130	<130	<130	<130	<130	<130	<130	<130	<130
Density	g/m^3	0.998	1.000	1.000	0.999	1.000	0.999	0.997	0.997	0.998	1.000	1.000	1.000
Viscosity	cSt	0.901	0.904	0.898	0.903	0.897	0.897	0.899	0.901	0.899	0.898	0.898	0.897

Table 4-8. Unit 3 – Analytical Results for Total Chlorine, Ash, Metals, and Physical Parameters in the Containerized Solids Waste Feed

Analytical Parameter	Units	Run 1	Run 2				Run 3				Run 4		
		1 PM	1 PM	2A HCl/Cl_2	2B Metals	2C Dioxins/ Furans	1 PM	2A HCl/Cl_2	2B Metals	2C Dioxins/ Furans	2A HCl/Cl_2	2B Metals	2C Dioxins/ Furans
Chlorine	mg/kg	253	229	482	195	129	347	115	271	204	382	255	297
Ash	mg/kg	670,000	682,000	663,000	775,000	737,000	778,000	655,000	715,000	682,000	721,000	686,000	698,000
Arsenic	mg/kg	NA	NA	NA	7.5	NA	NA	NA	6.4	NA	NA	8.4	NA
Beryllium	mg/kg	NA	NA	NA	0.58	NA	NA	NA	0.55	NA	NA	0.79	NA
Cadmium	mg/kg	NA	NA	NA	<0.071	NA	NA	NA	<0.076	NA	NA	<0.071	NA
Chromium	mg/kg	NA	NA	NA	13.6	NA	NA	NA	13.7	NA	NA	18.9	NA
Lead	mg/kg	NA	NA	NA	11.1	NA	NA	NA	10.7	NA	NA	14.1	NA
Mercury	mg/kg	NA	NA	NA	0.028	NA	NA	NA	0.028	NA	NA	0.026	NA
Percent Water	%	18.2	15.8	22.5	27.4	22.0	28.7	20.8	25.0	19.0	27.5	24.8	22.6
Heating Value	Btu/lb	<130	<130	<130	<130	<130	<130	<130	<130	<130	<130	<130	<130
Density	g/m^3	NA	NA	NA	NA	NA	NA	NA	NA	NA	NA	NA	NA
Viscosity	cSt	NA	NA	NA	NA	NA	NA	NA	NA	NA	NA	NA	NA

Table 4-9. Unit 4 – Analytical Results for Chlorine, Ash, Metals, and Physical Parameters in the Low-Btu Liquid Waste Feed to the Kiln

Analytical Parameter	Units	Run 1				Run 2			Run 3				Run 4
		1 PM	2A HCl/Cl_2	2B Metals	2C Dioxins/ Furans	2A HCl/Cl_2	2B Metals	2C Dioxins/ Furans	1 PM	2A HCl/Cl_2	2B Metals	2C Dioxins/ Furans	1 PM
Chlorine	mg/kg	472	416	413	449	467	393	422	537	486	532	439	530
Ash	mg/kg	2,790	2,910	3,100	2,570	3,060	3,260	2,940	3,320	3,220	2,630	3,260	3,250
Arsenic	mg/kg	NA	NA	5.5	NA	NA	4.9	NA	NA	NA	2.9	NA	NA
Beryllium	mg/kg	NA	NA	<0.094	NA	NA	<0.098	NA	NA	NA	<0.096	NA	NA
Cadmium	mg/kg	NA	NA	13.6	NA	NA	12.1	NA	NA	NA	9.4	NA	NA
Chromium	mg/kg	NA	NA	1.3	NA	NA	1.2	NA	NA	NA	0.84	NA	NA
Lead	mg/kg	NA	NA	3.3	NA	NA	2.9	NA	NA	NA	1.6	NA	NA
Mercury	mg/kg	NA	NA	0.11	NA	NA	0.14	NA	NA	NA	0.11	NA	NA
Percent Water	%	98.8	97.3	97.7	97.0	96.5	95.8	97.3	97.1	98.1	98.6	96.9	98.8
Heating Value	Btu/lb	<130	<130	<130	<130	<130	157	166	<130	197	<130	283	402
Density	g/m^3	0.999	1.000	1.000	0.999	0.999	1.000	1.000	1.000	1.000	0.999	1.000	0.999
Viscosity	cSt	0.934	0.939	0.929	0.933	0.928	0.933	0.929	0.932	0.930	0.932	0.932	0.932

Table 4-10. Unit 4 – Analytical Results for Chlorine, Ash, Metals, and Physical Parameters in the High-Btu Liquid Waste Feed to the Kiln

Analytical Parameter	Units	Run 1				Run 2			Run 3				Run 4
		1 PM	2A HCl/Cl_2	2B Metals	2C Dioxins/ Furans	2A HCl/Cl_2	2B Metals	2C Dioxins/ Furans	1 PM	2A HCl/Cl_2	2B Metals	2C Dioxins/ Furans	1 PM
Chlorine	mg/kg	1,470	1,450	1,490	1,420	1,390	1,360	1,360	1,350	1,360	1,350	1,350	1,330
Ash	mg/kg	1,610	2,350	2,110	1,820	898	1,010	1,020	1,500	973	931	1,020	989
Arsenic	mg/kg	NA	NA	1.4	NA	NA	0.37	NA	NA	NA	<0.32	NA	NA
Beryllium	mg/kg	NA	NA	<0.099	NA	NA	<0.093	NA	NA	NA	<0.097	NA	NA
Cadmium	mg/kg	NA	NA	0.12	NA	NA	<0.073	NA	NA	NA	<0.077	NA	NA
Chromium	mg/kg	NA	NA	0.24	NA	NA	<0.2	NA	NA	NA	<0.21	NA	NA
Lead	mg/kg	NA	NA	1.1	NA	NA	0.4	NA	NA	NA	<0.27	NA	NA
Mercury	mg/kg	NA	NA	0.048	NA	NA	0.021	NA	NA	NA	0.018	NA	NA
Percent Water	%	24.0	24.3	24.0	23.8	25.0	24.9	24.5	25.2	24.8	25.1	24.7	24.8
Heating Value	Btu/lb	8,740	8,700	8,690	8,750	8,780	8,760	8,730	8,760	8,790	8,750	8,780	8,810
Density	g/m^3	0.876	0.877	0.876	0.877	0.877	0.877	0.877	0.877	0.877	0.878	0.877	0.877
Viscosity	cSt	1.29	1.28	1.28	1.29	1.37	1.37	1.37	1.38	1.36	1.37	1.36	1.36

Table 4-11. Unit 4 – Analytical Results for Chlorine, Ash, Metals, and Physical Parameters in the Liquid Waste Feed to the SCC

Analytical Parameter	Units	Run 1				Run 2			Run 3				Run 4
		1 PM	2A HCl/Cl_2	2B Metals	2C Dioxins/ Furans	2A HCl/Cl_2	2B Metals	2C Dioxins/ Furans	1 PM	2A HCl/Cl_2	2B Metals	2C Dioxins/ Furans	1 PM
Chlorine	mg/kg	1,250	1,230	1,250	1,210	1,260	2,500	1,240	1,270	1,280	1,250	1,280	1,320
Ash	mg/kg	744	511	485	478	694	673	672	787	651	604	591	743
Arsenic	mg/kg	NA	NA	<0.3	NA	NA	<0.32	NA	NA	NA	<0.31	NA	NA
Beryllium	mg/kg	NA	NA	<0.092	NA	NA	<0.098	NA	NA	NA	<0.094	NA	NA
Cadmium	mg/kg	NA	NA	<0.073	NA	NA	<0.077	NA	NA	NA	<0.074	NA	NA
Chromium	mg/kg	NA	NA	<0.2	NA	NA	<0.22	NA	NA	NA	<0.21	NA	NA
Lead	mg/kg	NA	NA	0.26	NA	NA	<0.27	NA	NA	NA	<0.26	NA	NA
Mercury	mg/kg	NA	NA	0.017	NA	NA	0.019	NA	NA	NA	0.017	NA	NA
Percent Water	%	27.0	26.5	26.5	26.2	26.9	26.7	27.0	26.8	26.6	25.6	26.6	26.9
Heating Value	Btu/lb	8,830	8,810	8,790	8,810	8,760	8,800	8,760	8,780	8,860	8,860	8,870	8,830
Density	g/m^3	0.879	0.878	0.878	0.878	0.879	0.878	0.877	0.879	0.877	0.878	0.878	0.878
Viscosity	cSt	1.54	1.52	1.52	1.52	1.53	1.52	1.52	1.52	1.52	1.52	1.51	1.52

Table 4-12. Unit 4 – Analytical Results for Chlorine, Ash, Metals, and Physical Parameters in the Containerized Solids Waste Feed

Analytical Parameter	Units	Run 1				Run 2			Run 3				Run 4
		1 PM	2A HCl/Cl_2	2B Metals	2C Dioxins/ Furans	2A HCl/Cl_2	2B Metals	2C Dioxins/ Furans	1 PM	2A HCl/Cl_2	2B Metals	2C Dioxins/ Furans	1 PM
Chlorine	mg/kg	176	192	190	167	205	201	257	227	207	180	271	244
Ash	mg/kg	758,000	828,000	739,000	728,000	728,000	731,000	745,000	724,000	749,000	730,000	719,000	771,000
Arsenic	mg/kg	NA	NA	2.4	NA	NA	2.0	NA	NA	NA	2.1	NA	NA
Beryllium	mg/kg	NA	NA	0.13	NA	NA	0.16	NA	NA	NA	<0.1	NA	NA
Cadmium	mg/kg	NA	NA	0.46	NA	NA	0.43	NA	NA	NA	0.45	NA	NA
Chromium	mg/kg	NA	NA	45.2	NA	NA	58.9	NA	NA	NA	35.1	NA	NA
Lead	mg/kg	NA	NA	35.9	NA	NA	212	NA	NA	NA	25.4	NA	NA
Mercury	mg/kg	NA	NA	0.18	NA	NA	0.24	NA	NA	NA	0.26	NA	NA
Percent Water	%	7.64	8.10	6.75	9.10	7.93	8.29	7.82	9.88	8.11	7.94	9.31	6.31
Heating Value	Btu/lb	<130	<130	<130	<130	<130	<130	<130	<130	<130	<130	<130	<130
Density	g/m^3	NA	NA	NA	NA	NA	NA	NA	NA	NA	NA	NA	NA
Viscosity	cSt	NA	NA	NA	NA	NA	NA	NA	NA	NA	NA	NA	NA

Table 4-13. Unit 4 – Analytical Results for Chlorine, Ash, Metals, and Physical Parameters in the Bulk Solids Waste Feed

Analytical Parameter	Units	Run 1				Run 2			Run 3				Run 4
		1 PM	2A HCl/Cl_2	2B Metals	2C Dioxins/ Furans	2A HCl/Cl_2	2B Metals	2C Dioxins/ Furans	1 PM	2A HCl/Cl_2	2B Metals	2C Dioxins/ Furans	1 PM
Chlorine	mg/kg	171	184	219	265	257	243	236	193	191	173	182	164
Ash	mg/kg	695,000	646,000	715,000	784,000	770,000	720,000	674,000	689,000	729,000	737,000	695,000	710,000
Arsenic	mg/kg	NA	NA	2.2	NA	NA	3.0	NA	NA	NA	2.2	NA	NA
Beryllium	mg/kg	NA	NA	0.21	NA	NA	0.28	NA	NA	NA	0.26	NA	NA
Cadmium	mg/kg	NA	NA	0.28	NA	NA	0.37	NA	NA	NA	0.30	NA	NA
Chromium	mg/kg	NA	NA	35.6	NA	NA	37.9	NA	NA	NA	29.8	NA	NA
Lead	mg/kg	NA	NA	41.0	NA	NA	58.1	NA	NA	NA	26.6	NA	NA
Mercury	mg/kg	NA	NA	0.082	NA	NA	0.12	NA	NA	NA	0.077	NA	NA
Percent Water	%	14.2	18.8	10.3	11.6	16.6	19.2	19.9	13.3	19.3	17.3	15.6	24.7
Heating Value	Btu/lb	<130	<130	<130	<130	<130	<130	<130	<130	<130	<130	<130	<130
Density	g/m^3	NA	NA	NA	NA	NA	NA	NA	NA	NA	NA	NA	NA
Viscosity	cSt	NA	NA	NA	NA	NA	NA	NA	NA	NA	NA	NA	NA

4.2 Stack Gas

Samples of stack gas were collected for determination of the following analytical parameters:

- PM;
- HCl/Cl_2;
- Metals; and
- Dioxins/Furans.

The stack gas concentration of the test parameters reported as the average of three test runs are used to document compliance. Stack gas concentration for a parameter may include analytical results for multiple components. For the determination of stack gas concentration measured in an individual sample, or run, for those sampling systems as applicable (other than SW-846 Method 0023A), the following convention is used to sum the results of multiple analyses:

- In cases where all analytical results are hits (i.e., not "non-detects"), all analytical results will be summed.
- In cases where all analytical results are "non-detects," all method detection limits will be summed, and the summed result reported as a maximum ("<").
- In cases where one or more analytical results are hits, and one or more analytical results are "non-detects," the hits and the "non-detects" will be summed and reported as a maximum ("<").

Example calculations of the HWC MACT emission limits for PM, HCl/Cl_2, metals, dioxins/furans, and THC showing the calculations performed for a reported result are presented following the respective table.

4.2.1 PM in Stack Gas

Stack gas samples for determination of PM were collected according to EPA Method 5. These samples were analyzed gravimetrically for PM according to EPA Method 5. Two samples were recovered from each train for the determination of PM. They were as follows:

- An acetone rinse of the probe and nozzle (PNR), and;
- Filter (FILT).

The results for PM are presented in Table 4-14 for Unit 2, Table 4-15 for Unit 3, and Table 4-16 for Unit 4. The concentration of oxygen measured using CEMS and EPA Method 3A during the collection of the EPA Method 5 samples are shown in the tables, and the concentration of PM in the stack gas corrected to 7% O_2 is shown.

The analytical results for the determination of PM are included in Appendix G4.

Table 4-14. Unit 2 – Results of PM in Stack Gas

Date Time	Run 1 10-8-13 11:50-13:00	Run 2 10-9-13 09:45-10:53	Run 3 10-10-13 09:15-10:23
Volume Collected (dscf)	**40.815**	**42.356**	**41.278**
Oxygen Concentration (%)	**11.56**	**11.23**	**11.48**
PM Found (mg)			
Filter	<0.5	<0.5	<0.5
Probe and Nozzle Rinse	1.05	0.80	0.55
Total	<1.55	<1.3	<1.05
Stack Gas Loading			
Particulate Matter (mg/dscf)	<0.038	<0.031	<0.025
Particulate Matter (mg/dscm)	<1.3	<1.1	<0.90
Particulate Matter (mg/dscm, corrected to 7% O_2)	<2.0	<1.6	<1.3
Particulate Matter (gr/dscf)	<0.00059	<0.00047	<0.00039
Particulate Matter (gr/dscf, corrected to 7% O_2)	<0.00087	<0.00068	<0.00058
	<0.00071		

Particulate Matter HWC MACT Sample Calculation, gr/dscf @ 7% O_2
Unit 2 – Run 2

$$\textbf{PM Stack Concentration (mg/dscf)} = \frac{\text{Total Mass Loading (mg)}}{\text{Sample Volume (dscf)}}$$

$$\textbf{PM Stack Concentration (mg/dscf)} = \frac{<1.3\text{ mg}}{42.356\text{ dscf}} = <0.031$$

$$\textbf{PM Stack Concentration (gr/dscf)} = \text{Stack Concentration (mg/dscf)} \times \frac{0.01543\text{ mg}}{1\text{ grain}}$$

$$\textbf{PM Stack Concentration (gr/dscf)} = <0.031\text{ mg/dscf} \times \frac{0.01543\text{ mg}}{1\text{ grain}} = <0.00047$$

$$\textbf{PM Stack Concentration (gr/dscf @ 7\% O}_2\textbf{)} = \text{Stack Concentration (gr/dscf)} \times \frac{(21\% - 7\%)}{(21\% - \text{Meas. O}_2)}$$

$$\textbf{PM Stack Concentration (gr/dscf @ 7\% O}_2\textbf{)} = 0.0006\text{ gr/dscf} \times \frac{(21 - 7)}{(21 - 11.23)} = 0.00068$$

Table 4-15. Unit 3 – Results of PM in Stack Gas

Date Time	Run 1 10-15-13 13:16-14:25	Run 2 10-16-13 11:15-12:25	Run 3 10-1713 09:50-10:57
Volume Collected (dscf)	**41.229**	**42.461**	**41.921**
Oxygen Concentration (%)	**12.87**	**13.38**	**11.74**
Particulate Matter Found (mg)			
Filter	1.05	1.3	1.15
Probe and Nozzle Rinse	1.95	1.7	2.5
Total	3.00	3.00	3.65
Stack Gas Loading – Front-Half Only			
Particulate Matter (mg/dscf)	0.0728	0.0707	0.0871
Particulate Matter (mg/dscm)	2.57	2.50	3.07
Particulate Matter (mg/dscm, corrected to 7% O_2)	4.45	4.61	4.67
Particulate Matter (gr/dscf)	0.00112	0.00109	0.00134
Particulate Matter (gr/dscf, corrected to 7% O_2)	0.00194	0.00202	0.00204
	0.00200		

Table 4-16. Unit 4 – Results of PM in Stack Gas

Date Time	Run 1 10-23-13 09:30-10:42	Run 3 10-25-13 09:35-10:40	Run 4 10-25-13 10:50-11:55
Volume Collected (dscf)	**38.181**	**39.691**	**36.759**
Oxygen Concentration (%)	**12.22**	**12.48**	**12.11**
Particulate Matter Found (mg)			
Filter	1.95	0.5	<0.5
Probe and Nozzle Rinse	2.2	2.35	2.4
Front-Half Total	4.15	2.85	<2.9
Stack Gas Loading – Front-Half Only			
Particulate Matter (mg/dscf)	0.109	0.0718	<0.079
Particulate Matter (mg/dscm)	3.84	2.54	<2.8
Particulate Matter (mg/dscm, corrected to 7% O_2)	6.15	4.19	<4.4
Particulate Matter (gr/dscf)	0.00168	0.00111	<0.0012
Particulate Matter (gr/dscf, corrected to 7% O_2)	0.00269	0.00183	<0.0019
	<0.0021		

4.2.2 HCl/Cl_2 in Stack Gas

Stack gas samples for determination of HC/Cl_2 were collected using a Modified Method 26A. Samples were analyzed for the chloride ion using IC according to EPA Method 26A. Each train was recovered into multiple components for analysis as follows:

- The first two impingers, which contained 0.1 N sulfuric acid (ACIDIMP); and
- The fourth and fifth impingers, which contained 0.1 N sodium hydroxide (ALKIMP).

The results for HCl/Cl_2 are presented in Table 4-17 for Unit 2, Table 4-18 for Unit 3, and Table 4-19 for Unit 4. The concentration of oxygen measured using CEMS and EPA Method 3A during the second half of the run is shown in the tables, and the concentration of HCl/Cl_2 converted to chloride equivalents (Cl^-) and corrected to 7% O_2 is shown.

The analytical results for the determination of HCl/Cl_2 are included in Appendix G4.

Table 4-17. Unit 2 – Results of HCl/Cl_2 in Stack Gas

Date Time	Run 1 10-8-13 15:40-16:40	Run 3 10-10-13 12:30-13:30	Run 5 10-30-13 12:45-13:45
Volume Collected (dscf)	**37.384**	**37.290**	**36.879**
Oxygen Concentration (%)	**10.08**	**10.38**	**10.50**
Hydrogen Chloride	36,600	15,500	21,600
Chlorine	<160	<180	<180
Concentration (mg/dscf)			
Hydrogen Chloride	0.979	0.416	0.586
Chlorine	<0.0043	<0.0048	<0.0049
Concentration (chloride equivalents, ppmvd)			
Hydrogen Chloride	22.8	9.68	13.6
Chlorine	<0.10	<0.12	<0.12
Total	<23	<9.8	<14
Concentration (chloride equivalents, ppmvd, corrected to 7% O_2)			
Total	<29	<13	<18
Average		<20	

HCl/Cl_2 HWC MACT Sample Calculation, ppmvd @ 7% O_2

Unit 2 – Run 2

HCl Stack Concentration (mg/dscf) = $\frac{\text{Sum of HCl Sample Fraction Values (µg)}}{\text{Sample Volume (dscf)}} \times \frac{1\text{ mg}}{10^3\text{ µg}}$

HCl Stack Concentration (mg/dscf) = $\frac{15{,}500\text{ µg}}{37.290\text{ dscf}} \times \frac{1\text{ mg}}{10^3\text{ µg}}$ = 0.416

HCl Stack Concentration (chloride equivalents ppmvd) = $\frac{\text{Concentration (mg/dscf)}}{28.317\text{ L/cf}} \times \frac{1\text{ g}}{10^3\text{ mg}} \times \frac{24\text{ L/g-mol}}{\text{Molecular Weight of HCl (g/g-mol)}} \times 10^6\text{ ppmvd}$

HCl Stack Concentration (chloride equivalents ppmvd) = $\frac{0.416\text{ mg/dscf HCl}}{28.317\text{ L/cf}} \times \frac{1\text{ g}}{10^3\text{ mg}} \times \frac{24\text{ L/g-mol}}{36.5\text{ g/g-mol}} \times 10^6\text{ ppmvd}$ = 9.68

Cl_2 Stack Concentration (mg/dscf) = $\frac{\text{Sum of } Cl_2 \text{ Sample Fraction Values (µg)}}{\text{Sample Volume (dscf)}} \times \frac{1\text{ mg}}{10^3\text{ µg}}$

Cl_2 Stack Concentration (mg/dscf) = $\frac{<180\text{ µg}}{37.290\text{ dscf}} \times \frac{1\text{ mg}}{10^3\text{ µg}}$ = <0.0048

Cl2 Stack Concentration (chloride equivalents ppmvd) = $\frac{\text{Concentration (mg/dscf)}}{28.317\text{ L/cf}} \times \frac{1\text{ g}}{10^3\text{ mg}} \times \frac{24\text{ L/g-mol}}{\text{[Molecular Weight of Cl2 (g/g-mol)] / 2 Chloride Equivalents}} \times 10^6\text{ ppmvd}$

Cl2 Stack Concentration (chloride equivalents ppmvd) = $\frac{<0.0048\text{ mg/dscf Cl2}}{28.317\text{ L/cf}} \times \frac{1\text{ g}}{10^3\text{ mg}} \times \frac{24\text{ L/g-mol}}{35.5\text{ g/g-mol}} \times 10^6\text{ ppmvd}$ = <0.12

Concentration (chloride equivalents ppmvd) = HCl Stack Concentration (chloride equivalents ppmvd) + Cl2 Stack Concentration (chloride equivalents ppmvd)

Concentration (chloride equivalents ppmvd) = 9.68 ppmvd + <0.12 ppmvd = <9.8

Concentration (ppmvd @ 7% O2) = Concentration (chloride equivalents ppmvd) X (21% - 7%)

Concentration (ppmvd @ 7% O2) = <9.80 ppmvd X (21% - Meas. O2) (21 - 7) (21 – 10.38) = <13

Table 4-18. Unit 3 – Results of HCl/Cl_2 in Stack Gas

Date Time	Run 2 10-16-13 14:00-15:00	Run 3 10-17-13 12:30-13:33	Run 4 10-18-13 09:35-10:35
Volume Collected (dscf)	**36.088**	**34.597**	**35.241**
Oxygen Concentration (%)	**11.19**	**10.72**	**10.87**
Mass Found (ug)			
Hydrogen Chloride	4,740	4,720	1,810
Chlorine	<130	<120	<140
Concentration (mg/dscf)			
Hydrogen Chloride	0.131	0.136	0.0514
Chlorine	<0.0036	<0.0035	<0.0040
Concentration (chloride equivalents ppmvd)			
Hydrogen Chloride	3.06	3.18	1.20
Chlorine	<0.086	<0.083	<0.095
Total	<3.1	<3.3	<1.3
Concentration (Chloride equivalents, ppmvd, corrected to 7% O_2)			
Total	<4.5	<4.4	<1.8
Average		<3.6	

Table 4-19. Unit 4 – Results of HCl/Cl_2 in Stack Gas

Date Time	Run 1 10/23/2013 12:36-13:36	Run 3 10/24/2013 12:35-13:35	Run 4 10/25/2013 13:35-14:35
Volume Collected (dscf)	**39.935**	**39.264**	**37.034**
Oxygen Concentration (%)	**12.27**	**12.37**	**12.00**
Mass Found (ug)			
Hydrogen Chloride	11,100	8,150	23,600
Chlorine	<130	<120	<140
Concentration (mg/dscf)			
Hydrogen Chloride	0.278	0.208	0.637
Chlorine	<0.0033	<0.0031	<0.0038
Concentration (chloride equivalents ppmvd)			
Hydrogen Chloride	6.47	4.84	14.8
Chlorine	<0.078	<0.073	<0.091
Total	<6.6	<4.9	<15
Concentration (Chloride equivalents, ppmvd, corrected to 7% O_2)			
Total	<11	<8.0	<23
Average		<14	

4.2.3 Metals in Stack Gas

Metals were sampled in the stack gas using EPA Method 29. The samples were analyzed for the six (6) metals regulated by the HWC MACT. Five metals, arsenic, beryllium, cadmium, chromium, and lead) were analyzed using ICPES according to Method 6010B of SW-846. Mercury analysis was performed by cold vapor atomic absorption spectroscopy according to Method 7470A of SW-846.

The Method 29 sampling trains were recovered to provide the following fractions:

- Probe and nozzle rinse with 0.1 N nitric acid (PNR);
- Filter (FILT);
- Content and rinse of the acidified peroxide impingers with 0.1 N nitric acid (NPI);
- Contents and rinse of the empty impinger with 0.1 N nitric acid (EIR);
- Contents and rinse of the acidified permanganate impingers with deionized water, 0.1 N nitric acid, and permanganate solution (Perm); and;
- Rinse of the permanganate impingers with hydrochloric acid (HClRns).

The analytical results for metals in the individual sample fractions are presented in Table 4-20 for Unit 2, Table 4-22 for Unit 3, and Table 4-24 for Unit 4. The concentrations of the metals in the stack gas are presented in Table 4-21 for Unit 2, Table 4-23 for Unit 3, and Table 4-25 for Unit 4. The concentration of oxygen measured using CEMS and EPA Method 3A during the second half of the test are shown in Tables 4-21, 4-23, and 4-25, and the concentration of metals in the stack gas corrected to 7% O_2 is shown. The concentrations of cadmium and lead are shown summed as SVM, and the concentrations of arsenic, beryllium, and chromium are shown summed as LVM.

The analytical results for the determination of metals in the stack gas are included in Appendix G3.

Table 4-20. Unit 2 – Analytical Results of Metals in Stack Gas

Run	Analyte	Nitric Acid PNR & Filter	Nitric Acid & Hydrogen Peroxide Impingers	Empty Impinger Rinse	Potassium Permanganate Impinger	HCl Rinse	Total
1	Arsenic	<0.37	<0.25	<0.25			<0.87
	Beryllium	<0.015	<0.015	<0.015			<0.045
	Cadmium	<0.021	<0.021	<0.021			<0.063
	Chromium	3.3	0.78	0.33			4.41
	Lead	1.3	0.35	<0.27			<1.9
	Mercury	<0.08	84.2	51.6	<31.136	1.1	<170
3	Arsenic	<0.74	<0.25				<0.99
	Beryllium	<0.015	<0.015				<0.03
	Cadmium	<0.021	<0.021				<0.042
	Chromium	2.5	0.55				3.05
	Lead	<1	0.27				<1.3
	Mercury	<0.08	182	0.57	0.5	17.2	<200
5	Arsenic	0.77	<0.25				<1
	Beryllium	0.016	<0.015				<0.031
	Cadmium	<0.021	<0.021				<0.042
	Chromium	2.3	0.81				3.11
	Lead	<1	0.66				<1.7
	Mercury	<0.08	142	<0.15	3.4	14.3	<160

[1] The empty impinger was analyzed for As, Be, Cd, Cr, and Pb due to carry-over from the second nitric acid and hydrogen peroxide impinger.

Table 4-21. Unit 2 – Results of Metals in Stack Gas

Date Time	Run 1 10-8-13 15:40-18:43	Run 3 10-10-13 12:30-15:10	Run 5 10-30-13 12:45-15:32	Average
Volume Collected (dscf)	**84.952**	**78.951**	**79.607**	
Oxygen Concentration (%)	**10.08**	**10.38**	**10.50**	
Mass Found (µg)				
Arsenic	<0.87	<0.99	<1.0	
Beryllium	<0.045	<0.030	<0.031	
Cadmium	<0.063	<0.042	<0.042	
Chromium	4.41	3.05	3.11	
Lead	<1.9	<1.3	<1.7	
Mercury	<170	<200	<160	
Stack Gas Concentration (µg/dscf)				
Arsenic	<0.010	<0.013	<0.013	<0.012
Beryllium	<0.00053	<0.00038	<0.00039	<0.00043
Cadmium	<0.00074	<0.00053	<0.00053	<0.00060
Chromium	0.0519	0.0386	0.0391	0.0432
Lead	<0.023	<0.016	<0.021	<0.020
Mercury	<2.0	<2.5	<2.0	<2.2
Stack Gas Concentration (µg/dscm)				
Arsenic	<0.36	<0.44	<0.45	<0.42
Beryllium	<0.019	<0.013	<0.014	<0.015
Cadmium	<0.026	<0.019	<0.019	<0.021
Chromium	1.83	1.36	1.38	1.53
Lead	<0.80	<0.57	<0.74	<0.70
Mercury	<70	<90	<71	<77
Stack Gas Concentration (µg/dscm, 7% O_2)				
Arsenic	<0.46	<0.59	<0.60	<0.55
Beryllium	<0.024	<0.018	<0.018	<0.020
Cadmium	<0.034	<0.025	<0.025	<0.028
Chromium	2.35	1.80	1.84	2.00
Lead	<1.0	<0.75	<0.98	<0.92
Mercury	<90	<120	<95	<100
SVM (Cd, Pb)	<1.1	<0.78	<1.0	<0.95
LVM (As, Be, Cr)	<2.8	<2.4	<2.5	<2.6
Mercury	<90	<120	<95	<100

Table 4-22. Unit 3 – Analytical Results of Metals in Stack Gas

Run	Analyte	Nitric Acid PNR & Filter	Nitric Acid & Hydrogen Peroxide Impingers	Empty Impinger Rinse	Potassium Permanganate Impinger	HCl Rinse	Total
2	Arsenic	<0.74	<0.25				<0.99
	Beryllium	<0.015	<0.015				<0.03
	Cadmium	<0.021	<0.021				<0.042
	Chromium	10.6	0.56				11.2
	Lead	28.6	<0.27				<29
	Mercury	<0.08	81	0.29	0.21	2.5	<84
3	Arsenic	<0.74	<0.25				<0.99
	Beryllium	<0.015	<0.015				<0.03
	Cadmium	<0.021	<0.021				<0.042
	Chromium	11	0.79				11.8
	Lead	19.4	<0.27				<20
	Mercury	<0.08	52.2	0.25	<0.048	2.6	<55
4	Arsenic	<0.37	0.83				<1.2
	Beryllium	<0.015	<0.015				<0.03
	Cadmium	0.91	<0.021				<0.93
	Chromium	13.7	0.72				14.4
	Lead	15.7	0.3				16
	Mercury	<0.08	54	0.18	0.16	12.8	<67

Table 4-23. Unit 3 – Results of Metals in Stack Gas

Date Time	Run 2 10-16-13 14:00-16:50	Run 3 10-17-13 12:30-15:25	Run 4 10-18-13 09:35-12:20	Average
Volume Collected (dscf)	**71.708**	**69.016**	**71.540**	
Oxygen Concentration (%)	**11.19**	**10.72**	**10.87**	
Mass Found (µg)				
Arsenic	<0.99	<0.99	<1.2	
Beryllium	<0.030	<0.030	<0.030	
Cadmium	<0.042	<0.042	<0.93	
Chromium	11.2	11.8	14.4	
Lead	<29	<20	16.0	
Mercury	<84	<55	<67	
Stack Gas Concentration (µg/dscf)				
Arsenic	<0.014	<0.014	<0.017	<0.015
Beryllium	<0.00042	<0.00043	<0.00042	<0.00042
Cadmium	<0.00059	<0.00061	<0.013	<0.0047
Chromium	0.156	0.171	0.202	0.176
Lead	<0.40	<0.29	0.224	<0.30
Mercury	<1.2	<0.80	<0.94	<0.97
Stack Gas Concentration (µg/dscm)				
Arsenic	<0.49	<0.51	<0.59	<0.53
Beryllium	<0.015	<0.015	<0.015	<0.015
Cadmium	<0.021	<0.021	<0.46	<0.17
Chromium	5.50	6.03	7.12	6.22
Lead	<14	<10	7.90	<11
Mercury	<41	<28	<33	<34
Stack Gas Concentration (µg/dscm, 7% O_2)				
Arsenic	<0.70	<0.69	<0.82	<0.74
Beryllium	<0.021	<0.021	<0.021	<0.021
Cadmium	<0.030	<0.029	<0.64	<0.23
Chromium	7.87	8.23	9.87	8.66
Lead	<20	<14	10.9	<15
Mercury	<59	<39	<46	<48
SVM (Cd, Pb)	<20	<14	<12	<15
LVM (As, Be, Cr)	<8.6	<8.9	<11	<9.4
Mercury	<59	<39	<46	<48

Metals HWC MACT Sample Calculation, µg/dscm @ 7% O_2

Total Mass (µg) = Sum of Masses in Individual Sample Fractions (See Table 4-20)

Unit 2 – Run 1, Arsenic

$$\textbf{Metals Stack Concentration (µg/dscf)} = \frac{\text{Arsenic Mass (µg)}}{\text{Sample Volume (dscf)}}$$

$$\textbf{Metals Stack Concentration (µg/dscf)} = \frac{<0.87\ \mu g}{84.952\ \text{dscf}} = <0.010$$

$$\textbf{Metals Stack Concentration (µg/dscm)} = \text{Arsenic Stack Concentration (µg/dscf)} \times \frac{35.315\ \text{dscf}}{1\ \text{dscm}}$$

$$\textbf{Metals Stack Concentration (µg/dscm)} = <0.010\ \mu g/\text{dscf} \times \frac{35.315\ \text{dscf}}{1\ \text{dscm}} = <0.36$$

$$\textbf{Metals Stack Concentration (µg/dscm @ 7\% O}_2\textbf{)} = \text{Arsenic Stack Concentration (µg/dscm)} \times \frac{(21\% - 7\%)}{(21\% - \text{Meas. } O_2)}$$

$$\textbf{Metals Stack Concentration (µg/dscm @ 7\% O}_2\textbf{)} = <0.36 \times \frac{(21 - 7)}{(21 - 10.08)} = <0.46$$

Table 4-24. Unit 4 – Analytical Results of Metals in Stack Gas

Run	Analyte	Nitric Acid PNR & Filter	Nitric Acid & Hydrogen Peroxide Impingers	Empty Impinger Rinse	Potassium Permanganate Impinger	HCl Rinse	Total
1	Arsenic	9.1	<0.25				<9.4
	Beryllium	<0.015	<0.015				<0.03
	Cadmium	0.33	<0.021				<0.35
	Chromium	5.5	0.82				6.32
	Lead	10.4	0.71				11.1
	Mercury	<0.08	9	<0.12	<0.048	0.22	<9.5
2	Arsenic	7.9	<0.25				<8.2
	Beryllium	<0.015	<0.015				<0.03
	Cadmium	0.15	<0.021				<0.17
	Chromium	4.2	0.66				4.86
	Lead	5.4	0.42				5.82
	Mercury	<0.08	10.4	<0.12	<0.047	<0.082	<11
3	Arsenic	2.7	<0.25				<3
	Beryllium	<0.015	<0.015				<0.03
	Cadmium	0.069	<0.021				<0.09
	Chromium	6.9	0.62				7.52
	Lead	14	0.44				14.4
	Mercury	<0.08	19.5	<0.12	<0.047	0.75	<20

Table 4-25. Unit 4 – Results of Metals in Stack Gas

Date Time	Run 1 10-23-13 12:36-15:20	Run 2 10-24-13 12:35-15:15	Run 3 10-25-13 13:35-16:11	Average
Volume Collected (dscf)	**76.068**	**76.498**	**76.846**	
Oxygen Concentration (%)	**12.27**	**12.37**	**12.00**	
Mass Found (µg)				
Arsenic	<9.4	<8.2	<3.0	
Beryllium	<0.030	<0.030	<0.030	
Cadmium	<0.35	<0.17	<0.090	
Chromium	6.32	4.86	7.52	
Lead	11.1	5.82	14.4	
Mercury	<9.5	<11	<20	
Stack Gas Concentration (µg/dscf)				
Arsenic	<0.12	<0.11	<0.038	<0.089
Beryllium	<0.00039	<0.00039	<0.00039	<0.00039
Cadmium	<0.0046	<0.0022	<0.0012	<0.0027
Chromium	0.0831	0.0635	0.0979	0.0815
Lead	0.146	0.0761	0.188	0.137
Mercury	<0.12	<0.14	<0.27	<0.18
Stack Gas Concentration (µg/dscm)				
Arsenic	<4.3	<3.8	<1.4	<3.2
Beryllium	<0.014	<0.014	<0.014	<0.014
Cadmium	<0.16	<0.079	<0.041	<0.094
Chromium	2.93	2.24	3.46	2.88
Lead	5.16	2.69	6.64	4.83
Mercury	<4.4	<5.0	<9.4	<6.3
Stack Gas Concentration (µg/dscm, 7% O_2)				
Arsenic	<7.0	<6.1	<2.1	<5.1
Beryllium	<0.022	<0.023	<0.022	<0.022
Cadmium	<0.26	<0.13	<0.065	<0.15
Chromium	4.73	3.66	5.40	4.59
Lead	8.31	4.38	10.4	7.68
Mercury	<7.1	<8.1	<15	<10.0
SVM (Cd, Pb)	<8.6	<4.5	<10	<7.8
LVM (As, Be, Cr)	<12	<9.8	<7.5	<9.7
Mercury	<7.1	<8.1	<15	<10.0

4.2.4 Dioxins/Furans in Stack Gas

Stack gas samples for determination of dioxins/furans were collected using SW-846 Method 0023A and were analyzed using SW-846 Method 8290, a high resolution gas chromatography (HRGC) with high resolution mass spectroscopy (HRMS) analytical technique.

The sampling train was recovered to provide the following fractions:

- Combined probe and nozzle rinse with acetone, methylene chloride and toluene (PNR);
- Filter (FILT);
- Condenser rinse with acetone, methylene chloride, and toluene (CR); and
- XAD sorbent (XAD).

Components recovered from the train were combined as follows:

- Combination of the filter and all the rinses between the nozzle and filter; and
- Combination of the sorbent and all the rinses between the filter and sorbent.

After sample cleanup and concentration procedures at the analytical laboratory, an aliquot of the front-half extracts (i.e., PNR and filter) is combined and analyzed using SW-846 Method 8290 for dioxins/furans separate from the back-half components (i.e., condenser rinses, XAD sorbent). Dioxins/furans results are presented in Table 4-26 for Unit 2, Table 4-27 for Unit 3, and Table 4-28 for Unit 4. The concentration of oxygen measured using CEMS and EPA Method 3A during the second half of the run are shown in the tables, and the concentration of dioxins/furans corrected to 7% O_2 is shown.

The analytical results for the dioxins/furans analyses are included in Appendix G2. Results for dioxins/furans are converted to 2,3,7,8-tetrachlorodibenzo-dioxin toxicity equivalents (TEQ). Note that Section §1208(b)(1)(iii) of the HWC MACT states that non-detects (all results preceded by a "<") of dioxins/furans can be assumed to be at zero concentrations. Additionally, results followed by an "*" are denoted as Estimated Possible Maximum Concentrations, and are likewise not included in the calculation of total mass.

Table 4-26. Unit 2 – Results of Dioxins/Furans in Stack Gas

		Run 1			Run 3			Run 5		
Date		10-8-13			10-10-13			10-30-13		
Time		15:40-18:55			12:30-15:40			12:45-16:02		
Volume Collected (dscf)		121.164			119.568			124.921		
Oxygen Concentration (%)		10.08			10.38			10.50		
Analyte	Toxicity Equivalent Factor[1]	Mass Found (pg)[2]								
		PNR/Filter	XAD/Cond	Sum	PNR/Filter	XAD/Cond	Sum	PNR/Filter	XAD/Cond	Sum
2,3,7,8-TCDD	1	<2.9[3]	<3.6	<6.5	<2.8	<3	<5.8	<4.6	<4.7	<9.3
1,2,3,7,8-PeCDD	0.5	<1.4	7.2 *	<8.6	<1.6	6.9 *	<8.5	<2.1	23 *	<25.1
1,2,3,4,7,8-HxCDD	0.1	<1.2	7.3	<8.5	<1.2	5	<6.2	<1.7	20	<21.7
1,2,3,6,7,8-HxCDD	0.1	<1.2	14	<15.2	<1.2	15	<16.2	<1.6	39	<40.6
1,2,3,7,8,9-HxCDD	0.1	<1.2	12	<13.2	<1.2	17	<18.2	<1.7	48	<49.7
1,2,3,4,6,7,8-HpCDD	0.01	3.3 *[4]	82	85.3 *	2.9	94	96.9	<2	250	<252
OCDD	0.001	9.1	110	119.1	8.1 *	120	128.1 *	7.7	350	357.7
2,3,7,8-TCDF	0.1	<1.7	9.5	<11.2	<2	9.3	<11.3	<3	49	<52
1,2,3,7,8-PeCDF	0.05	<1.1	11 *	<12.1	<1.1	12 *	<13.1	<2.1	72 *	<74.1
2,3,4,7,8-PeCDF	0.5	<1.2	16	<17.2	<1.1	18	<19.1	<2.1	110 *	<112.1
1,2,3,4,7,8-HxCDF	0.1	<0.69	41 *	<41.69	<0.82	46 *	<46.82	<1.1	190 *	<191.1
1,2,3,6,7,8-HxCDF	0.1	<0.61	17 *	<17.61	<0.73	17 *	<17.73	<1	130 *	<131
1,2,3,7,8,9-HxCDF	0.1	<0.75	2.9	<3.65	<0.89	2.1	<2.99	<1.2	12	<13.2
2,3,4,6,7,8-HxCDF	0.1	<0.65	13 *	<13.65	<0.77	16 *	<16.77	<1.1	130	<131.1
1,2,3,4,6,7,8-HpCDF	0.01	5 *	79	84 *	4	89	93	2.4 *	780	782.4 *
1,2,3,4,7,8,9-HpCDF	0.01	<1.7	10	<11.7	<1.8	12	<13.8	<1.7	110	<111.7
OCDF	0.001	11 *	110	121 *	11	98 *	109 *	9.7	630 *	639.7 *
Total Toxicity Equivalents		0.00910	14.5	14.5	0.0800	15.9	16.0	0.0174	41.6	41.6
Concentration (ng TEQ/dscf)		0.000120			0.000134			0.000333		
Concentration (ng TEQ/dscm)		0.00423			0.00472			0.0118		
Concentration (ng TEQ/dscm @ 7% O_2)		0.00543			0.00624			0.0157		
Average Concentration (ng TEQ/dscm @ 7% O_2)		0.00912								

[1] Toxic Equivalency Factor (TEF) as developed in: ``Interim Procedure for Estimating Risks Associated With Exposures to Mixtures of Chlorinated Dibenzo-p-Dioxin and -Dibenzofurans (CDDs and CDFs) and 1989 Update", March 1989; Van den Berg, M., et al. ``Toxic Equivalency Factors (TEFs) for PCBs, PCDDs, PCDFs for Humans and Wildlife" Environmental Health Perspectives, Volume 106, Number 12, December 1998., as directed by the Preamble to the HWC MACT.

[2] Results followed by an "*" are Estimated Maximum Possible Concentrations (EMPCs).

[3] In accordance with Section §1208(b)(1)(iii) of the HWC MACT, non-detects of dioxins/furans are assumed to be at zero concentrations.

[4] In accordance with the USEPA Analytical Services Branch document *National Functional Guidelines for Chlorinated Dibenzo–p–Dioxins and Chlorinated Dibenzofurans Data Review*, EMPCs are not included in the calculation of TEFs.

Dioxins/Furans HWC MACT Sample Calculation
ng TEQ/dscm @ 7% O_2 (continued)
Unit 2 – Run 1

$$\textbf{Stack Concentration (ng TEQ/dscf)} = \frac{\text{Sum of all TEQ Values (pg)}}{\text{Sample Volume (dscf)}} \times \frac{1\text{ ng}}{10^3\text{ pg}}$$

$$\textbf{Stack Concentration (ng TEQ/dscf)} = \frac{14.5\text{ pg TEQ}}{121.164\text{ dscf}} \times \frac{1\text{ ng}}{10^3\text{ pg}} = 0.000120$$

$$\textbf{Stack Concentration (ng TEQ/dscm)} = \text{Concentration (ng TEQ/dscf)} \times \frac{35.315\text{ dscf}}{1\text{ dscm}}$$

$$\textbf{Stack Concentration (ng TEQ/dscm)} = 0.000120 \times \frac{35.315\text{ dscf}}{1\text{ dscm}} = 0.00423$$

$$\textbf{Stack Concentration (ng TEQ/dscm @ 7\% O}_2\textbf{)} = \text{Concentration (ng TEQ/dscm)} \times \frac{(21\% - 7\%)}{(21\% - \text{Meas. O}_2)}$$

$$\textbf{Stack Concentration (ng TEQ/dscm @ 7\% O}_2\textbf{)} = 0.00423 \times \frac{(21 - 7)}{(21 - 10.08)} = 0.00543$$

Table 4-27. Unit 3 – Results of Dioxins/Furans in Stack Gas

		Run 2			Run 3			Run 4		
Date		10-16-13			10-17-13			10-18-13		
Time		14:00-17:20			12:30-15:55			09:35-12:50		
Volume Collected (dscf)		106.303			102.724			102.624		
Oxygen Concentration (%)		11.19			10.72			10.87		
Analyte	Toxicity Equivalent Factor[1]	Mass Found (pg)[2]								
		PNR/Filter	XAD/Cond	Sum	PNR/Filter	XAD/Cond	Sum	PNR/Filter	XAD/Cond	Sum
2,3,7,8-TCDD	1	<0.14[3]	1.1 *	<1.24	<0.7	3.8 *	<4.5	<0.29	1.9 *	<2.19
1,2,3,7,8-PeCDD	0.5	0.23	4.8 *	5.03 *	1.4 *	12 *	13.4 *	<0.15	5 *	<5.15
1,2,3,4,7,8-HxCDD	0.1	<0.15	2.6	<2.75	<0.7	4.1 *	<4.8	<0.42	3	<3.42
1,2,3,6,7,8-HxCDD	0.1	0.22 *[4]	5.3	5.52 *	<0.67	11 *	<11.67	<0.4	5.1 *	<5.5
1,2,3,7,8,9-HxCDD	0.1	0.41 *	5.6	6.01 *	1.5 *	12 *	13.5 *	1.4 *	8.1	9.5 *
1,2,3,4,6,7,8-HpCDD	0.01	1.5 *	29	30.5 *	1.6 *	57	58.6 *	1.9	29	30.9
OCDD	0.001	7.7 *	37	44.7 *	12	40	52	5.6 *	28	33.6 *
2,3,7,8-TCDF	0.1	0.29	6.8 *	7.09 *	<0.47	14	<14.47	<0.29	11	<11.29
1,2,3,7,8-PeCDF	0.05	<0.11	9.1 *	<9.21	<0.78	20 *	<20.78	<0.31	12 *	<12.31
2,3,4,7,8-PeCDF	0.5	<0.11	19 *	<19.11	<0.78	36 *	<36.78	<0.31	27 *	<27.31
1,2,3,4,7,8-HxCDF	0.1	0.48 *	25 *	25.48 *	2.5 *	61 *	63.5 *	0.62 *	26 *	26.62 *
1,2,3,6,7,8-HxCDF	0.1	0.22 *	11 *	11.22 *	<0.57	23 *	<23.57	0.29 *	12 *	12.29 *
1,2,3,7,8,9-HxCDF	0.1	0.7	0.9 *	1.6 *	1.4 *	2.4 *	3.8 *	0.56 *	1.2 *	1.76 *
2,3,4,6,7,8-HxCDF	0.1	0.42 *	11 *	11.42 *	1.3 *	21 *	22.3 *	0.55 *	12 *	12.55 *
1,2,3,4,6,7,8-HpCDF	0.01	1.1 *	28	29.1 *	<0.63	43	<43.63	0.78 *	22	22.78 *
1,2,3,4,7,8,9-HpCDF	0.01	0.48 *	3.8 *	4.28 *	1.9 *	5 *	6.9 *	0.66 *	4.4	5.06 *
OCDF	0.001	3.8	8.5 *	12.3 *	5.8	9.7 *	15.5 *	4.7	5.7 *	10.4 *
Total Toxicity Equivalents		0.218	1.96	2.17	0.0178	2.44	2.46	0.0237	2.79	2.82
Concentration (ng TEQ/dscf)		0.0000205			0.0000239			0.0000274		
Concentration (ng TEQ/dscm)		0.000722			0.000845			0.000969		
Concentration (ng TEQ/dscm @ 7% O_2)		0.00103			0.00115			0.00134		
Average Concentration (ng TEQ/dscm @ 7% O_2)		0.00118								

[1] Toxic Equivalency Factor (TEF) as developed in: ``Interim Procedure for Estimating Risks Associated With Exposures to Mixtures of Chlorinated Dibenzo-p-Dioxin and -Dibenzofurans (CDDs and CDFs) and 1989 Update", March 1989; Van den Berg, M., et al. ``Toxic Equivalency Factors (TEFs) for PCBs, PCDDs, PCDFs for Humans and Wildlife" Environmental Health Perspectives, Volume 106, Number 12, December 1998., as directed by the Preamble to the HWC MACT.

[2] Results followed by an "*" are Estimated Maximum Possible Concentrations (EMPCs).

[3] In accordance with Section §1208(b)(1)(iii) of the HWC MACT, non-detects of dioxins/furans are assumed to be at zero concentrations.

[4] In accordance with the USEPA Analytical Services Branch document *National Functional Guidelines for Chlorinated Dibenzo–p–Dioxins and Chlorinated Dibenzofurans Data Review*, EMPCs are not included in the calculation of TEFs.

Table 4-28. Unit 4 – Results of Dioxins/Furans in Stack Gas

		Run 1			Run 2			Run 3		
Date		10-23-13			10-24-13			10-25-13		
Time		12:36-15:50			12:35-15:45			13:35-16:41		
Volume Collected (dscf)		110.791			112.803			115.284		
Oxygen Concentration (%)		12.27			12.37			12.00		
Analyte	Toxicity Equivalent Factor[1]	Mass Found (pg)[2]								
		PNR/Filter	XAD/Cond	Sum	PNR/Filter	XAD/Cond	Sum	PNR/Filter	XAD/Cond	Sum
2,3,7,8-TCDD	1	<4.9[3]	7 *	<11.9	<4.3	9.5 *	<13.8	<2.5	8.2 *	<10.7
1,2,3,7,8-PeCDD	0.5	<1.9	120 *	<121.9	<2.2	120 *	<122.2	2	120 *	122 *
1,2,3,4,7,8-HxCDD	0.1	<2	230	<232	4.3	230	234.3	3.9 *	230	233.9 *
1,2,3,6,7,8-HxCDD	0.1	13 *[4]	990	1003 *	9.4 *	930	939.4 *	16	940	956
1,2,3,7,8,9-HxCDD	0.1	10 *	640	650 *	12 *	650	662 *	12	630	642
1,2,3,4,6,7,8-HpCDD	0.01	160	6100	6260	130	5500	5630	160	5900	6060
OCDD	0.001	170	3600	3770	150	3500	3650	190	4100	4290
2,3,7,8-TCDF	0.1	3.8 *	78	81.8 *	<2.9	70	<72.9	3.6 *	70	73.6 *
1,2,3,7,8-PeCDF	0.05	<2	130 *	<132	<2.1	120 *	<122.1	<1.2	110 *	<111.2
2,3,4,7,8-PeCDF	0.5	4.5 *	550 *	554.5 *	<2.2	510 *	<512.2	4.7 *	430 *	434.7 *
1,2,3,4,7,8-HxCDF	0.1	4.7 *	570 *	574.7 *	5	510 *	515 *	3.6 *	260	263.6 *
1,2,3,6,7,8-HxCDF	0.1	2.3 *	310 *	312.3 *	2.7 *	290 *	292.7 *	2.6 *	300 *	302.6 *
1,2,3,7,8,9-HxCDF	0.1	<1.3	39 *	<40.3	<1.4	38 *	<39.4	<0.82	43 *	<43.82
2,3,4,6,7,8-HxCDF	0.1	7.9 *	600 *	607.9 *	6.9	510 *	516.9 *	8.4 *	560 *	568.4 *
1,2,3,4,6,7,8-HpCDF	0.01	15	760	775	10 *	710	720 *	17	720	737
1,2,3,4,7,8,9-HpCDF	0.01	4.1 *	180	184.1 *	3.5 *	160	163.5 *	5.9 *	200	205.9 *
OCDF	0.001	12 *	140 *	152 *	10 *	140	150 *	11 *	160 *	171 *
Total Toxicity Equivalents		1.92	268	270	3.07	255	258	5.76	285	291
Concentration (ng TEQ/dscf)		0.00243			0.00229			0.00252		
Concentration (ng TEQ/dscm)		0.0860			0.0809			0.0892		
Concentration (ng TEQ/dscm @ 7% O_2)		0.138			0.132			0.139		
Average Concentration (ng TEQ/dscm @ 7% O_2)		0.137								

[1] Toxic Equivalency Factor (TEF) as developed in: "Interim Procedure for Estimating Risks Associated With Exposures to Mixtures of Chlorinated Dibenzo-p-Dioxin and -Dibenzofurans (CDDs and CDFs) and 1989 Update", March 1989; Van den Berg, M., et al. "Toxic Equivalency Factors (TEFs) for PCBs, PCDDs, PCDFs for Humans and Wildlife" Environmental Health Perspectives, Volume 106, Number 12, December 1998., as directed by the Preamble to the HWC MACT.

[2] Results followed by an "*" are Estimated Maximum Possible Concentrations (EMPCs).

[3] In accordance with Section §1208(b)(1)(iii) of the HWC MACT, non-detects of dioxins/furans are assumed to be at zero concentrations.

[4] In accordance with the USEPA Analytical Services Branch document *National Functional Guidelines for Chlorinated Dibenzo–p–Dioxins and Chlorinated Dibenzofurans Data Review*, EMPCs are not included in the calculation of TEFs.

4.2.5 THC in Stack Gas

Total hydrocarbons (THC) were monitored in the stack gas using EPA Method 25A. THC was monitored throughout the second half of each run. Stack gas concentrations of THC are presented in Table 4-29 for Unit 2, Table 4-30 for Unit 3, and Table 4-31 for Unit 4. The concentration of oxygen measured using CEMS and EPA Method 3A during the second half of the run are shown in the tables, and the concentration of THC corrected to 7% O_2 is shown.

Table 4-29. Unit 2 – Results for THC in Stack Gas

Date Time	Run 1 10-8-13 15:40 - 18:55	Run 3 10-10-13 12:30 - 15:40	Run 5 10-30-13 12:45 - 16:02
THC (ppmv, wet, as propane)	0.68	0.07	0.21
Moisture (%)	44.7	45.3	42.9
THC (ppmv, dry, as propane)	1.2	0.13	0.37
Oxygen Concentration (%)	10.08	10.38	10.50
THC (ppmv, dry, as propane, corrected to 7% O_2)	1.6	0.18	0.49
Average THC (ppmv, dry, as propane, corrected to 7% O_2)	0.75		

THC HWC MACT Sample Calculation
ppmvd @ 7% O_2 (continued)
Unit 2 – Run 5

$$\text{THC Concentration (ppmvd)} = \text{THC Concentration (ppmv)} \times \frac{1}{(1 - (\%\ \text{Moisture} / 100\%))}$$

$$\text{THC Concentration (ppmvd)} = 0.21\ \text{ppmv} \times \frac{1}{(1 - (42.9\% / 100\%))} = 0.37$$

$$\text{THC Concentration (ppmvd)} = \text{THC Concentration (ppmvd)} \times \frac{(21\% - 7\%)}{(21\% - \text{Meas. } O_2)}$$

$$\text{THC Concentration (ppmvd)} = 0.37 \times \frac{(21 - 7)}{(21 - 10.50)} = 0.49$$

Table 4-30. Unit 3 – Results for THC in Stack Gas

Date Time	Run 2 10-16-13 14:00 - 17:20	Run 3 10-17-13 12:30 - 15:55	Run 4 10-18-13 09:35 - 12:50
THC (ppmv, wet, as propane)	0.18	0.11	0.23
Moisture (%)	42.9	44.4	43.7
THC (ppmv, dry, as propane)	0.31	0.19	0.41
Oxygen Concentration (%)	11.19	10.72	10.87
THC (ppmv, dry, as propane, corrected to 7% O_2)	0.44	0.26	0.57
Average THC (ppmv, dry, as propane, corrected to 7% O_2)	0.43		

Table 4-31. Unit 4 – Results for THC in Stack Gas

Date Time	Run 1 10-23-13 12:36 - 15:50	Run 2 10-24-13 12:35 - 15:45	Run 3 10-25-13 13:35 - 16:41
THC (ppmv, wet, as propane)	0.19	0.23	0.33
Moisture (%)	39.2	38.3	39.3
THC (ppmv, dry, as propane)	0.32	0.37	0.54
Oxygen Concentration (%)	12.27	12.37	12.00
THC (ppmv, dry, as propane, corrected to 7% O_2)	0.51	0.60	0.85
Average THC (ppmv, dry, as propane, corrected to 7% O_2)	0.65		

4.3 Chlorine, Ash, and Metals Feedrates

This section presents calculated values using the analytical results presented previously, waste feedrates, and spiking feedrates. Feedrates are calculated for:

- Total Chlorine/Chloride;
- Ash; and
- Metals.

In those circumstances where a constituent is not detected in a waste feed (i.e., is not analyzed above the detection limit), the concentration of that parameter is treated as zero "0" in the calculation of the feedrate of that constituent that becomes an OPL for that parameter.

4.3.1 Chlorine Feedrate

Feedrate of total chlorine and chloride (i.e., chlorine) is an OPL for the emission standards for hydrogen chloride and chlorine gas (HCl/Cl_2) and for SVM and LVM. The feedrate of chlorine has been determined during both the HCl/Cl_2 and metals (i.e., SVM and LVM) stack sampling in the second part of each run. Table 4-32 presents the chlorine feedrates calculated during both the HCl/Cl_2 and metals stack sampling for Unit 2. Chlorine feedrates for Unit 3 are presented in Table 4-33, and chlorine feedrates for Unit 4 are presented in Table 4-34.

For the calculation of the chlorine feedrate, the weight of the Containerized Solid Waste used to calculate the feedrates of chlorine was reduced by the weight of the box, and the spiking materials lead nitrate, hexachloroethane, and the solution of mercuric nitrate to determine the feedrate of Containerized Solid Waste that was analyzed for chlorine.

4.3.2 Ash Feedrate

Feedrate of ash is an OPL for the emission standard for particulate matter. The feedrate of ash has been determined during the particulate matter stack sampling in the first part of each run. Table 4-35 presents the ash feedrate calculated during stack sampling for particulate matter for Unit 2. Ash feedrates for Unit 3 are presented in Table 4-36, and ash feedrates for Unit 4 are presented in Table 4-37.

Table 4-32. Unit 2 – Chlorine Feedrate

		HCl/Cl_2 Stack Sampling			Metals Stack Sampling		
		Run 1 10-8-13 15:40 - 16:40	**Run 3 10-10-13 12:30 - 13:30**	**Run 5 10-30-13 12:45 - 13:45**	**Run 1 10-8-13 15:40 - 18:43**	**Run 3 10-10-13 12:30 - 15:10**	**Run 5 10-30-13 12:45 - 15:32**
Low-Btu Liquid Waste	Feedrate (lbs/hr)	1,422.1	1,500.9	1,451.9	1,474.6	1,513.3	1,396.5
	Chlorine Concentration (mg/kg)	340	404	340	347	364	357
	Chlorine Feedrate (lb/hr)	0.48	0.61	0.49	0.51	0.55	0.50
High-Btu Liquid Waste	Feedrate (lbs/hr)	1,370.8	1,098.7	1,200.0	1,289.1	1,098.9	1,164.6
	Chlorine Concentration (mg/kg)	6,960	3,260	3,500	7,140	3,210	3,580
	Chlorine Feedrate (lb/hr)	9.54	3.58	4.20	9.20	3.53	4.17
Specialty Liquid Waste	Feedrate (lbs/hr)	485.9	398.2	440.8	432.6	425.4	445.3
	Chlorine Concentration (mg/kg)	105	130	106	159	124	92.4
	Chlorine Feedrate (lb/hr)	0.05	0.05	0.05	0.07	0.05	0.04
Containerized Solid Waste[1]	Feedrate (lbs/hr)	540.0	534.3	535.7	547.0	536.1	542.4
	Chlorine Concentration (mg/kg)	184	345	346	167	499	396
	Chlorine Feedrate (lb/hr)	0.10	0.18	0.19	0.09	0.27	0.21
Chlorine Spiking	Chlorine Feedrate (lb/hr)	197.9	203.1	197.9	199.7	199.2	200.2
Total Chlorine Feedrate (lb/hr)		**208.0**	**207.5**	**202.8**	**209.6**	**203.6**	**205.1**
Average Chlorine Feedrate (lb/hr)		**206.1**			**206.1**		

[1] The weight of the Containerized Solid Waste used to calculate the feedrates of chlorine and metals has been reduced by the weight of the box, and the spiking materials lead nitrate, hexachloroethane, and the solution of mercuric nitrate.

Table 4-33. Unit 3 – Chlorine Feedrate

		HCl/Cl_2 Stack Sampling			Metals Stack Sampling		
		Run 2 10-16-13 14:00 - 15:00	**Run 3 10-17-13 12:30 - 13:33**	**Run 4 10-18-13 09:35 - 10:35**	**Run 2 10-16-13 14:00 - 16:50**	**Run 3 10-17-13 12:30 - 15:25**	**Run 4 10-18-13 09:35 - 12:20**
Low-Btu Liquid Waste	Feedrate (lbs/hr)	1,783.5	1,563.4	1,725.3	1,787.6	1,685.3	1,707.4
	Chlorine Concentration (mg/kg)	563	409	388	419	429	408
	Chlorine Feedrate (lb/hr)	1.00	0.64	0.67	0.75	0.72	0.70
High-Btu Liquid Waste	Feedrate (lbs/hr)	977.2	1,151.9	1,163.5	1,043.9	1,166.5	1,197.7
	Chlorine Concentration (mg/kg)	2,460	1,690	1,910	2,720	1,650	1,810
	Chlorine Feedrate (lb/hr)	2.40	1.95	2.22	2.84	1.92	2.17
Specialty Liquid Waste	Feedrate (lbs/hr)	177.5	407.7	248.8	202.9	350.0	244.8
	Chlorine Concentration (mg/kg)	1,480	101	113	696	125	127
	Chlorine Feedrate (lb/hr)	0.26	0.04	0.03	0.14	0.04	0.03
Containerized Solid Waste[1]	Feedrate (lbs/hr)	550.6	539.6	516.5	541.9	536.5	523.9
	Chlorine Concentration (mg/kg)	482	115	382	195	271	255
	Chlorine Feedrate (lb/hr)	0.27	0.06	0.20	0.11	0.15	0.13
Chlorine Spiking	Chlorine Feedrate (lb/hr)	203.1	203.3	197.9	200.3	201.7	200.7
Total Chlorine Feedrate (lb/hr)		**207.0**	**206.0**	**201.0**	**204.2**	**204.6**	**203.7**
Average Chlorine Feedrate (lb/hr)		**204.7**			**204.2**		

[1] The weight of the Containerized Solid Waste used to calculate the feedrates of chlorine and metals has been reduced by the weight of the box, and the spiking materials lead nitrate, hexachloroethane, and the solution of mercuric nitrate.

Table 4-34. Unit 4 – Chlorine Feedrate

		HCl/Cl_2 Stack Sampling			Metals Stack Sampling		
		Run 1 10-23-13 12:36 - 13:36	Run 2 10-24-13 12:35 - 13:35	Run 3 10-25-13 13:35 - 14:35	Run 1 10-23-13 12:36 - 15:20	Run 2 10-24-13 12:35 - 15:15	Run 3 10-25-13 13:35 - 16:11
Low-Btu Liquid Waste to Kiln	Feedrate (lbs/hr)	1,943.7	1,996.5	1,999.6	1,978.5	1,986.6	1,999.0
	Chlorine Concentration (mg/kg)	416	467	486	413	393	532
	Chlorine Feedrate (lb/hr)	0.81	0.93	0.97	0.82	0.78	1.06
High-Btu Liquid Waste to Kiln	Feedrate (lbs/hr)	1,167.0	1,205.4	1,201.0	1,189.2	1,201.2	1,201.8
	Chlorine Concentration (mg/kg)	1,450	1,390	1,360	1,490	1,360	1,350
	Chlorine Feedrate (lb/hr)	1.69	1.68	1.63	1.77	1.63	1.62
Liquid Waste to SCC	Feedrate (lbs/hr)	1165.6	1203.1	1196.3	1186.2	1201.5	1196.2
	Chlorine Concentration (mg/kg)	1,230	1,260	1,280	1,250	2,500	1,250
	Chlorine Feedrate (lb/hr)	1.43	1.52	1.53	1.48	3.00	1.50
Containerized Solid Waste[1]	Feedrate (lbs/hr)	515.3	512.3	498.3	514.2	505.4	507.6
	Chlorine Concentration (mg/kg)	192	205	207	190	201	180
	Chlorine Feedrate (lb/hr)	0.10	0.11	0.10	0.10	0.10	0.09
Bulk Solid Waste	Feedrate (lbs/hr)	6,093.0	5,448.0	5,739.0	5,251.5	5,598.4	5,345.0
	Chlorine Concentration (mg/kg)	184	257	191	219	243	173
	Chlorine Feedrate (lb/hr)	1.12	1.40	1.10	1.15	1.36	0.92
Chlorine Spiking	Chlorine Feedrate (lb/hr)	197.9	197.9	197.9	200.0	197.2	200.3
Total Chlorine Feedrate (lb/hr)		**203.0**	**203.5**	**203.2**	**205.3**	**204.1**	**205.5**
Average Chlorine Feedrate (lb/hr)		**203.2**			**205.0**		

[1] The weight of the Containerized Solid Waste used to calculate the feedrates of chlorine and metals has been reduced by the weight of the box, and the spiking materials lead nitrate, hexachloroethane, and the solution of mercuric nitrate

Table 4-35. Unit 2 – Ash Feedrate During the EPA Method 5 Stack Sampling for PM

		Run 1 10-8-13 11:50 - 13:00	Run 2 10-9-13 09:45 - 10:53	Run 3 10-10-13 09:45 - 10:53
Low-Btu Liquid Waste	Feedrate (lbs/hr)	1,277.2	1,353.3	1,288.3
	Ash Concentration (mg/kg)	3,140	2,960	3,250
	Ash Feedrate (lb/hr)	4.01	4.01	4.19
High-Btu Liquid Waste	Feedrate (lbs/hr)	1,000.2	997.7	998.5
	Ash Concentration (mg/kg)	1,350	1,010	1,180
	Ash Feedrate (lb/hr)	1.35	1.01	1.18
Specialty Liquid Waste	Feedrate (lbs/hr)	270.8	256.5	296.7
	Ash Concentration (mg/kg)	649	599	598
	Ash Feedrate (lb/hr)	0.18	0.15	0.18
Containerized Solid Waste	Feedrate (lbs/hr)	734.9	738.4	746.0
	Ash Concentration (mg/kg)	675,000	688,000	655,000
	Ash Feedrate (lb/hr)	496.1	508.0	488.6
Total Ash Feedrate (lb/hr)		**501.6**	**513.2**	**494.2**
Average Ash Feedrate (lb/hr)		**503.0**		

Table 4-36. Unit 3 – Ash Feedrate During the EPA Method 5 Stack Sampling for PM

		Run 1 10-15-13 13:16 - 14:25	Run 2 10-16-13 11:15 - 12:25	Run 3 10-17-13 09:50 - 10:57
Low-Btu Liquid Waste	Feedrate (lbs/hr)	1,292.9	955.4	1,357.6
	Ash Concentration (mg/kg)	3,090	4,070	3,650
	Ash Feedrate (lb/hr)	4.00	3.89	4.96
High-Btu Liquid Waste	Feedrate (lbs/hr)	847.9	818.2	875.3
	Ash Concentration (mg/kg)	1,260	937	599
	Ash Feedrate (lb/hr)	1.07	0.77	0.52
Specialty Liquid Waste	Feedrate (lbs/hr)	307.9	269.1	457.4
	Ash Concentration (mg/kg)	591	622	588
	Ash Feedrate (lb/hr)	0.18	0.17	0.27
Containerized Solid Waste	Feedrate (lbs/hr)	738.3	742.1	720.7
	Ash Concentration (mg/kg)	670,000	682,000	778,000
	Ash Feedrate (lb/hr)	494.7	506.1	560.7
Total Ash Feedrate (lb/hr)		**499.9**	**510.9**	**566.5**
Average Ash Feedrate (lb/hr)		**525.8**		

Table 4-37. Unit 4 – Ash Feedrate During the EPA Method 5 Stack Sampling for PM

		Run 1 10-23-13 09:30 - 10:42	Run 3 10-25-13 09:35 - 10:40	Run 4 10-25-13 10:50 - 11:55
Low-Btu Liquid Waste	Feedrate (lbs/hr)	1,899.6	1,901.0	1,896.8
	Ash Concentration (mg/kg)	2,790	3,320	3,250
	Ash Feedrate (lb/hr)	5.30	6.31	6.16
High-Btu Liquid Waste	Feedrate (lbs/hr)	1,101.4	1,098.1	1,108.9
	Ash Concentration (mg/kg)	1,610	1,500	989
	Ash Feedrate (lb/hr)	1.77	1.65	1.10
Liquid Waste to SCC	Feedrate (lbs/hr)	1,095.6	1,100.7	1,102.8
	Ash Concentration (mg/kg)	744	787	743
	Ash Feedrate (lb/hr)	0.82	0.87	0.82
Containerized Solid Waste	Feedrate (lbs/hr)	565.8	568.6	553.8
	Ash Concentration (mg/kg)	758,000	724,000	771,000
	Ash Feedrate (lb/hr)	428.9	411.7	427.0
Bulk Solid Waste	Feedrate (lbs/hr)	6,286.7	6,408.0	5,992.6
	Ash Concentration (mg/kg)	695,000	689,000	710,000
	Ash Feedrate (lb/hr)	4,369.2	4,415.1	4,254.8
Total Ash Feedrate (lb/hr)		**4,806.0**	**4,835.6**	**4,689.9**
Average Ash Feedrate (lb/hr)		**4,777.2**		

4.3.3 Metals Feedrates

Feedrates of the metals regulated by the HWC MACT (As, Be, Cd, Cr, Pb, and Hg) are OPLs for the emission standards for SVM, LVM, and mercury. The feedrates of these six metals have been determined during the metals stack sampling in the second part of each run. The stack gas concentrations of all six of the HWC MACT metals are determined by EPA Method 29. Table 4-38 presents the feedrates of these metals calculated during stack sampling for metals for Unit 2. Metals feedrates for Unit 3 are presented in Table 4-40, and metals feedrates for Unit 4 are presented in Table 4-42.

The OPLs for metals feedrates are total LVM feedrate (i.e., total and pumpable) and pumpable LVM for the emission standard for LVM (i.e., arsenic, beryllium, and chromium); (Total) SVM feedrate (i.e., total and pumpable) for the emission standard for SVM (i.e., cadmium and lead); and (Total) mercury feedrate (i.e., total and pumpable) for the emission standard for mercury. Table 4-39 presents the feedrates of total LVM and pumpable LVM, total SVM, and mercury calculated during stack sampling for metals for Unit 2. Total LVM and pumpable LVM, total SVM, and mercury feedrates for Unit 3 are presented in Table 4-41, and total LVM and pumpable LVM, total SVM, and mercury feedrates for Unit 4 are presented in Table 4-43.

For the calculation of the metals feedrates, the weight of the containerized solid waste used to calculate the feedrates of metals was reduced by the weight of the box, and the spiking materials lead nitrate, hexachloroethane, and the solution of mercuric nitrate to determine the feedrate of containerized solid waste that was analyzed for the metals As, Be, Cd, Cr, Pb, and Hg.

Table 4-38. Unit 2 – Metals Feedrates

		Run 1 10-8-13 15:40 - 18:43	Run 3 10-10-13 12:30 - 15:10	Run 5 10-30-13 12:45 - 15:32
Low-Btu Liquid Waste	Feedrate (lbs/hr)	1,475	1,513	1,396
	Arsenic Conc (mg/kg)	2.7	3.2	2.1
	Beryllium Conc (mg/kg)	<0.097	<0.096	<0.097
	Cadmium Conc (mg/kg)	7.2	9	7
	Chromium Conc (mg/kg)	0.8	0.88	0.74
	Lead Conc (mg/kg)	1.1	1.7	1.1
	Mercury Conc (mg/kg	0.021	0.042	0.052
	Arsenic Feedrate (lbs/hr)	0.00398	0.00484	0.00293
	Beryllium Feedrate (lbs/hr)	<0.00014	<0.00015	<0.00014
	Cadmium Feedrate (lbs/hr)	0.0106	0.0136	0.00978
	Chromium Feedrate (lbs/hr)	0.00118	0.00133	0.00103
	Lead Feedrate (lbs/hr)	0.00162	0.00257	0.00154
	Mercury Feedrate (lbs/hr)	0.0000310	0.0000636	0.0000726
High-Btu Liquid Waste	Feedrate (lbs/hr)	1,289	1,099	1,165
	Arsenic Conc (mg/kg)	8.3	2.8	<0.32
	Beryllium Conc (mg/kg)	<0.096	<0.099	<0.096
	Cadmium Conc (mg/kg)	<0.076	<0.078	<0.076
	Chromium Conc (mg/kg)	0.26	<0.22	<0.21
	Lead Conc (mg/kg)	1	0.67	6.7
	Mercury Conc (mg/kg	0.026	0.021	0.096
	Arsenic Feedrate (lbs/hr)	0.0107	0.00308	<0.00037
	Beryllium Feedrate (lbs/hr)	<0.00012	<0.00011	<0.00011
	Cadmium Feedrate (lbs/hr)	<0.000098	<0.000086	<0.000089
	Chromium Feedrate (lbs/hr)	0.000335	<0.00024	<0.00024
	Lead Feedrate (lbs/hr)	0.00129	0.000736	0.00780
	Mercury Feedrate (lbs/hr)	0.0000335	0.0000231	0.000112
Specialty Liquid Waste	Feedrate (lbs/hr)	433	425	445
	Arsenic Conc (mg/kg)	<0.32	<0.3	<0.31
	Beryllium Conc (mg/kg)	<0.096	<0.092	<0.093
	Cadmium Conc (mg/kg)	<0.076	<0.073	<0.073
	Chromium Conc (mg/kg)	<0.21	<0.2	<0.2
	Lead Conc (mg/kg)	<0.27	<0.26	<0.26
	Mercury Conc (mg/kg	<0.009	<0.0086	<0.0099
	Arsenic Feedrate (lbs/hr)	<0.00014	<0.00013	<0.00014
	Beryllium Feedrate (lbs/hr)	<0.000042	<0.000039	<0.000041
	Cadmium Feedrate (lbs/hr)	<0.000033	<0.000031	<0.000033
	Chromium Feedrate (lbs/hr)	<0.000091	<0.000085	<0.000089
	Lead Feedrate (lbs/hr)	<0.00012	<0.00011	<0.00012
	Mercury Feedrate (lbs/hr)	<0.0000039	<0.0000037	<0.0000044
Containerized Solid Waste[1]	Feedrate (lbs/hr)	547	536	542
	Arsenic Conc (mg/kg)	8.8	7.5	8.8
	Beryllium Conc (mg/kg)	0.48	0.61	0.73
	Cadmium Conc (mg/kg)	0.082	<0.077	0.084
	Chromium Conc (mg/kg)	12.8	19.3	16.7
	Lead Conc (mg/kg)	11.6	11.7	13.5
	Mercury Conc (mg/kg	0.045	0.022	0.016
	Arsenic Feedrate (lbs/hr)	0.00481	0.00402	0.00477
	Beryllium Feedrate (lbs/hr)	0.000263	0.000327	0.000396
	Cadmium Feedrate (lbs/hr)	0.0000449	<0.000041	0.0000456
	Chromium Feedrate (lbs/hr)	0.00700	0.0103	0.00906
	Lead Feedrate (lbs/hr)	0.00635	0.00627	0.00732
	Mercury Feedrate (lbs/hr)	0.0000246	0.0000118	0.00000868

Table 4-38. (continued) Unit 2 – Metals Feedrates

		Run 1 10-8-13 15:40 - 18:43	Run 3 10-10-13 12:30 - 15:10	Run 5 10-30-13 12:45 - 15:32
Spiking	Arsenic Feedrate (lbs/hr)	0	0	0
	Beryllium Feedrate (lbs/hr)	0	0	0
	Cadmium Feedrate (lbs/hr)	0	0	0
	Chromium Feedrate (lbs/hr)	45.8	47.3	45.8
	Lead Feedrate (lbs/hr)	61.9	61.7	62.0
	Mercury Feedrate (lbs/hr)	0.00196	0.00196	0.00204
Pumpable Feedrate[2]	Arsenic Feedrate (lbs/hr)	0.0147	0.00792	0.00293
	Beryllium Feedrate (lbs/hr)	0	0	0
	Cadmium Feedrate (lbs/hr)	0.0106	0.0136	0.00978
	Chromium Feedrate (lbs/hr)	45.8	47.3	45.9
	Lead Feedrate (lbs/hr)	0.00291	0.00331	0.00934
	Mercury Feedrate (lbs/hr)	0.0000645	0.0000866	0.000184
Total Feedrate[2]	Arsenic Feedrate (lbs/hr)	0.0195	0.0119	0.00771
	Beryllium Feedrate (lbs/hr)	0.000263	0.000327	0.000396
	Cadmium Feedrate (lbs/hr)	0.0107	0.0136	0.00982
	Chromium Feedrate (lbs/hr)	45.8	47.3	45.9
	Lead Feedrate (lbs/hr)	61.9	61.7	62.0
	Mercury Feedrate (lbs/hr)	0.00205	0.00206	0.00224

[1] The weight of the Containerized Solid Waste used to calculate the feedrates of chlorine and metals has been reduced by the weight of the box, and the spiking materials lead nitrate, hexachloroethane, and the solution of mercuric nitrate.

[2] Non-detects treated as a zero "0".

Table 4-39. Unit 2 – HWC MACT Metals Feedrates

	Units	Run 1 10-8-13 15:40 - 18:43	Run 3 10-10-13 12:30 - 15:10	Run 5 10-30-13 12:45 - 15:32	Average
Arsenic (Total)	lb/hr	0.0195	0.0119	0.0077	0.0130
Beryllium (Total)	lb/hr	0.00026	0.00033	0.00040	0.00033
Chromium (Total)	lb/hr	45.8	47.3	45.9	46.3
Total LVM (Arsenic, Beryllium, Chromium)	lb/hr	**45.9**	**47.3**	**45.9**	**46.3**
Arsenic (Pumpable)	lb/hr	0.0147	0.0079	0.0029	0.0085
Beryllium (Pumpable)	lb/hr	0.0000	0.0000	0.0000	0.0000
Chromium (Pumpable)	lb/hr	45.8	47.3	45.9	46.3
Pumpable LVM (Arsenic, Beryllium, Chromium)	lb/hr	**45.9**	**47.3**	**45.9**	**46.3**
Cadmium	lb/hr	0.0107	0.0136	0.0098	0.0114
Lead	lb/hr	61.9	61.7	62.0	61.9
Total SVM (Cadmium, Lead)	lb/hr	**61.9**	**61.7**	**62.0**	**61.9**
Mercury	lb/hr	**0.00205**	**0.00206**	**0.00224**	**0.00212**

Table 4-40. Unit 3 – Metals Feedrates

		Run 2 10-16-13 14:00 - 16:50	Run 3 10-17-13 12:30 - 15:25	Run 4 10-18-13 09:35 - 12:20
Low-Btu Liquid Waste	Feedrate (lbs/hr)	1,788	1,685	1,707
	Arsenic Conc (mg/kg)	4.8	3.2	3.3
	Beryllium Conc (mg/kg)	<0.096	<0.097	<0.096
	Cadmium Conc (mg/kg)	15.2	9.4	11.3
	Chromium Conc (mg/kg)	1.3	0.87	0.97
	Lead Conc (mg/kg)	3.1	1.9	1.9
	Mercury Conc (mg/kg	0.065	0.049	0.08
	Arsenic Feedrate (lbs/hr)	0.00858	0.00539	0.00563
	Beryllium Feedrate (lbs/hr)	<0.00017	<0.00016	<0.00016
	Cadmium Feedrate (lbs/hr)	0.0272	0.0158	0.0193
	Chromium Feedrate (lbs/hr)	0.00232	0.00147	0.00166
	Lead Feedrate (lbs/hr)	0.00554	0.00320	0.00324
	Mercury Feedrate (lbs/hr)	0.000116	0.0000826	0.000137
High-Btu Liquid Waste	Feedrate (lbs/hr)	1,044	1,167	1,198
	Arsenic Conc (mg/kg)	12.4	1.7	2.4
	Beryllium Conc (mg/kg)	<0.095	<0.1	<0.096
	Cadmium Conc (mg/kg)	<0.075	<0.079	<0.076
	Chromium Conc (mg/kg)	<0.21	<0.22	<0.21
	Lead Conc (mg/kg)	1.8	1	1.3
	Mercury Conc (mg/kg	0.027	0.029	0.022
	Arsenic Feedrate (lbs/hr)	0.0129	0.00198	0.00287
	Beryllium Feedrate (lbs/hr)	<0.000099	<0.00012	<0.00011
	Cadmium Feedrate (lbs/hr)	<0.000078	<0.000092	<0.000091
	Chromium Feedrate (lbs/hr)	<0.00022	<0.00026	<0.00025
	Lead Feedrate (lbs/hr)	0.00188	0.00117	0.00156
	Mercury Feedrate (lbs/hr)	0.0000282	0.0000338	0.0000263
Specialty Liquid Waste	Feedrate (lbs/hr)	203	350	245
	Arsenic Conc (mg/kg)	<0.32	<0.32	<0.33
	Beryllium Conc (mg/kg)	<0.098	<0.096	<0.099
	Cadmium Conc (mg/kg)	<0.077	<0.076	<0.078
	Chromium Conc (mg/kg)	<0.22	<0.21	<0.22
	Lead Conc (mg/kg)	<0.27	<0.27	<0.28
	Mercury Conc (mg/kg	<0.0088	<0.0094	<0.0099
	Arsenic Feedrate (lbs/hr)	<0.000065	<0.00011	<0.000081
	Beryllium Feedrate (lbs/hr)	<0.000020	<0.000034	<0.000024
	Cadmium Feedrate (lbs/hr)	<0.000016	<0.000027	<0.000019
	Chromium Feedrate (lbs/hr)	<0.000045	<0.000073	<0.000054
	Lead Feedrate (lbs/hr)	<0.000055	<0.000094	<0.000069
	Mercury Feedrate (lbs/hr)	<0.0000018	<0.0000033	<0.0000024
Containerized Solid Waste[1]	Feedrate (lbs/hr)	542	537	524
	Arsenic Conc (mg/kg)	7.5	6.4	8.4
	Beryllium Conc (mg/kg)	0.58	0.55	0.79
	Cadmium Conc (mg/kg)	<0.071	<0.076	<0.071
	Chromium Conc (mg/kg)	13.6	13.7	18.9
	Lead Conc (mg/kg)	11.1	10.7	14.1
	Mercury Conc (mg/kg	0.028	0.028	0.026
	Arsenic Feedrate (lbs/hr)	0.00406	0.00343	0.00440
	Beryllium Feedrate (lbs/hr)	0.000314	0.000295	0.000414
	Cadmium Feedrate (lbs/hr)	<0.000038	<0.000041	<0.000037
	Chromium Feedrate (lbs/hr)	0.00737	0.00735	0.00990
	Lead Feedrate (lbs/hr)	0.00601	0.00574	0.007393
	Mercury Feedrate (lbs/hr)	0.0000152	0.0000150	0.0000136

Table 4-40. (continued) Unit 3 – Metals Feedrates

		Run 2 10-16-13 14:00 - 16:50	Run 3 10-17-13 12:30 - 15:25	Run 4 10-18-13 09:35 - 12:20
Spiking	Arsenic Feedrate (lbs/hr)	0	0	0
	Beryllium Feedrate (lbs/hr)	0	0	0
	Cadmium Feedrate (lbs/hr)	0	0	0
	Chromium Feedrate (lbs/hr)	46.3	46.1	45.7
	Lead Feedrate (lbs/hr)	62.1	62.5	62.2
	Mercury Feedrate (lbs/hr)	0.00204	0.00200	0.00209
Pumpable Feedrate[2]	Arsenic Feedrate (lbs/hr)	0.0215	0.00738	0.00851
	Beryllium Feedrate (lbs/hr)	0	0	0
	Cadmium Feedrate (lbs/hr)	0.0272	0.0158	0.0193
	Chromium Feedrate (lbs/hr)	46.3	46.1	45.7
	Lead Feedrate (lbs/hr)	0.00742	0.00437	0.00480
	Mercury Feedrate (lbs/hr)	0.000144	0.000116	0.000163
Total Feedrate[2]	Arsenic Feedrate (lbs/hr)	0.0256	0.0108	0.0129
	Beryllium Feedrate (lbs/hr)	0.000314	0.000295	0.000414
	Cadmium Feedrate (lbs/hr)	0.0272	0.0158	0.0193
	Chromium Feedrate (lbs/hr)	46.3	46.1	45.7
	Lead Feedrate (lbs/hr)	62.1	62.5	62.2
	Mercury Feedrate (lbs/hr)	0.00220	0.00213	0.00226

[1] The weight of the Containerized Solid Waste used to calculate the feedrates of chlorine and metals has been reduced by the weight of the box, and the spiking materials lead nitrate, hexachloroethane, and the solution of mercuric nitrate.

[2] Non-detects treated as a zero "0".

Table 4-41. Unit 3 – HWC MACT Metals Feedrates

	Units	Run 2 10-16-13 14:00 - 16:50	Run 3 10-17-13 12:30 - 15:25	Run 4 10-18-13 09:35 - 12:20	Average
Arsenic (Total)	lb/hr	0.0256	0.0108	0.0129	0.0164
Beryllium (Total)	lb/hr	0.00031	0.00030	0.00041	0.00034
Chromium (Total)	lb/hr	46.3	46.1	45.7	46.0
Total LVM (Arsenic, Beryllium, Chromium)	lb/hr	**46.3**	**46.1**	**45.8**	**46.1**
Arsenic (Pumpable)	lb/hr	0.02152	0.00738	0.00851	0.01247
Beryllium (Pumpable)	lb/hr	0.00000	0.00000	0.00000	0.000000
Chromium (Pumpable)	lb/hr	46.3	46.1	45.7	46.0
Pumpable LVM (Arsenic, Beryllium, Chromium)	lb/hr	**46.3**	**46.1**	**45.7**	**46.0**
Cadmium	lb/hr	0.02717	0.01584	0.01929	0.02077
Lead	lb/hr	62.1	62.5	62.2	62.3
Total SVM (Cadmium, Lead)	lb/hr	**62.1**	**62.5**	**62.2**	**62.3**
Mercury	lb/hr	**0.00220**	**0.00213**	**0.00226**	**0.00220**

Table 4-42. Unit 4 – Metals Feedrates

		Run 1 10-23-13 12:36 - 15:20	Run 2 10-24-13 12:35 - 15:15	Run 3 10-25-13 13:35 - 16:11
Low-Btu Liquid Waste to Kiln	Feedrate (lbs/hr)	1,979	1,987	1,999
	Arsenic Conc (mg/kg)	5.5	4.9	2.9
	Beryllium Conc (mg/kg)	<0.094	<0.098	<0.096
	Cadmium Conc (mg/kg)	13.6	12.1	9.4
	Chromium Conc (mg/kg)	1.3	1.2	0.84
	Lead Conc (mg/kg)	3.3	2.9	1.6
	Mercury Conc (mg/kg	0.11	0.14	0.11
	Arsenic Feedrate (lbs/hr)	0.0109	0.00973	0.00580
	Beryllium Feedrate (lbs/hr)	<0.00019	<0.00019	<0.00019
	Cadmium Feedrate (lbs/hr)	0.0269	0.0240	0.0188
	Chromium Feedrate (lbs/hr)	0.00257	0.00238	0.00168
	Lead Feedrate (lbs/hr)	0.00653	0.00576	0.00320
	Mercury Feedrate (lbs/hr)	0.000218	0.000278	0.000220
High-Btu Liquid Waste to Kiln	Feedrate (lbs/hr)	1,189	1,201	1,202
	Arsenic Conc (mg/kg)	1.4	0.37	<0.32
	Beryllium Conc (mg/kg)	<0.099	<0.093	<0.097
	Cadmium Conc (mg/kg)	0.12	<0.073	<0.077
	Chromium Conc (mg/kg)	0.24	<0.2	<0.21
	Lead Conc (mg/kg)	1.1	0.4	<0.27
	Mercury Conc (mg/kg	0.048	0.021	0.018
	Arsenic Feedrate (lbs/hr)	0.00166	0.000444	<0.00038
	Beryllium Feedrate (lbs/hr)	<0.00012	<0.00011	<0.00012
	Cadmium Feedrate (lbs/hr)	0.000143	<0.000088	<0.000093
	Chromium Feedrate (lbs/hr)	0.000285	<0.00024	<0.00025
	Lead Feedrate (lbs/hr)	0.00131	0.000480	<0.00032
	Mercury Feedrate (lbs/hr)	0.0000571	0.0000252	0.0000216
Liquid Waste to SCC	Feedrate (lbs/hr)	1,186	1,202	1,196
	Arsenic Conc (mg/kg)	<0.3	<0.32	<0.31
	Beryllium Conc (mg/kg)	<0.092	<0.098	<0.094
	Cadmium Conc (mg/kg)	<0.073	<0.077	<0.074
	Chromium Conc (mg/kg)	<0.2	<0.22	<0.21
	Lead Conc (mg/kg)	0.26	<0.27	<0.26
	Mercury Conc (mg/kg	0.017	0.019	0.017
	Arsenic Feedrate (lbs/hr)	<0.00036	<0.00038	<0.00037
	Beryllium Feedrate (lbs/hr)	<0.00011	<0.00012	<0.00011
	Cadmium Feedrate (lbs/hr)	<0.000087	<0.000093	<0.000089
	Chromium Feedrate (lbs/hr)	<0.00024	<0.00026	<0.00025
	Lead Feedrate (lbs/hr)	0.000308	<0.00032	<0.00031
	Mercury Feedrate (lbs/hr)	0.0000202	0.0000228	0.0000203
Containerized Solid Waste[1]	Feedrate (lbs/hr)	514	505	508
	Arsenic Conc (mg/kg)	2.4	2	2.1
	Beryllium Conc (mg/kg)	0.13	0.16	<0.1
	Cadmium Conc (mg/kg)	0.46	0.43	0.45
	Chromium Conc (mg/kg)	45.2	58.9	35.1
	Lead Conc (mg/kg)	35.9	212	25.4
	Mercury Conc (mg/kg	0.18	0.24	0.26
	Arsenic Feedrate (lbs/hr)	0.00123	0.00101	0.00107
	Beryllium Feedrate (lbs/hr)	0.0000668	0.0000809	<0.000051
	Cadmium Feedrate (lbs/hr)	0.000237	0.000217	0.000228
	Chromium Feedrate (lbs/hr)	0.0232	0.0298	0.0178
	Lead Feedrate (lbs/hr)	0.0185	0.107	0.0129
	Mercury Feedrate (lbs/hr)	0.0000926	0.000121	0.000132

Table 4-42. (continued) Unit 4 – Metals Feedrates

		Run 1 10-23-13 12:36 - 15:20	Run 2 10-24-13 12:35 - 15:15	Run 3 10-25-13 13:35 - 16:11
Bulk Solid Waste	Feedrate (lbs/hr)	5251	5598	5345
	Arsenic Conc (mg/kg)	2.2	3	2.2
	Beryllium Conc (mg/kg)	0.21	0.28	0.26
	Cadmium Conc (mg/kg)	0.28	0.37	0.3
	Chromium Conc (mg/kg)	35.6	37.9	29.8
	Lead Conc (mg/kg)	41	58.1	26.6
	Mercury Conc (mg/kg	0.082	0.12	0.077
	Arsenic Feedrate (lbs/hr)	0.0116	0.0168	0.0118
	Beryllium Feedrate (lbs/hr)	0.00110	0.00157	0.00139
	Cadmium Feedrate (lbs/hr)	0.00147	0.00207	0.00160
	Chromium Feedrate (lbs/hr)	0.187	0.212	0.159
	Lead Feedrate (lbs/hr)	0.215	0.325	0.142
	Mercury Feedrate (lbs/hr)	0.000431	0.000672	0.000412
Spiking	Arsenic Feedrate (lbs/hr)	0	0	0
	Beryllium Feedrate (lbs/hr)	0	0	0
	Cadmium Feedrate (lbs/hr)	0	0	0
	Chromium Feedrate (lbs/hr)	46.0	46.0	45.8
	Lead Feedrate (lbs/hr)	62.0	61.1	62.0
	Mercury Feedrate (lbs/hr)	0.0393	0.0388	0.0394
Pumpable Feedrate[2]	Arsenic Feedrate (lbs/hr)	0.0125	0.0102	0.00580
	Beryllium Feedrate (lbs/hr)	0	0	0
	Cadmium Feedrate (lbs/hr)	0.0271	0.0240	0.0188
	Chromium Feedrate (lbs/hr)	46.0	46.0	45.8
	Lead Feedrate (lbs/hr)	0.00815	0.00624	0.00320
	Mercury Feedrate (lbs/hr)	0.000295	0.000326	0.000262
Total Feedrate[2]	Arsenic Feedrate (lbs/hr)	0.0253	0.0280	0.0186
	Beryllium Feedrate (lbs/hr)	0.00117	0.00165	0.00139
	Cadmium Feedrate (lbs/hr)	0.0288	0.0263	0.0206
	Chromium Feedrate (lbs/hr)	46.2	46.3	46.0
	Lead Feedrate (lbs/hr)	62.2	61.5	62.2
	Mercury Feedrate (lbs/hr)	0.0402	0.0399	0.0402

[1] The weight of the Containerized Solid Waste used to calculate the feedrates of chlorine and metals has been reduced by the weight of the box, and the spiking materials lead nitrate, hexachloroethane, and the solution of mercuric nitrate.

[2] Non-detects treated as a zero "0".

Table 4-43. Unit 4 – HWC MACT Metals Feedrates

	Units	Run 1 10-8-13 15:40 - 18:43	Run 3 10-10-13 12:30 - 15:10	Run 5 10-30-13 12:45 - 15:32	Average
Arsenic (Total)	lb/hr	0.0253	0.0280	0.0186	0.0240
Beryllium (Total)	lb/hr	0.00117	0.00165	0.00139	0.00140
Chromium (Total)	lb/hr	46.2	46.3	46.0	46.1
Total LVM (Arsenic, Beryllium, Chromium)	lb/hr	**46.2**	**46.3**	**46.0**	**46.2**
Arsenic (Pumpable)	lb/hr	0.0125	0.0102	0.0058	0.0095
Beryllium (Pumpable)	lb/hr	0.00000	0.00000	0.00000	0.000000
Chromium (Pumpable)	lb/hr	46.0	46.0	45.8	45.9
Pumpable LVM (Arsenic, Beryllium, Chromium)	lb/hr	**46.0**	**46.0**	**45.8**	**45.9**
Cadmium	lb/hr	0.0288	0.0263	0.0206	0.0252
Lead	lb/hr	62.2	61.5	62.2	62.0
Total SVM (Cadmium, Lead)	lb/hr	**62.2**	**61.6**	**62.2**	**62.0**
Mercury	lb/hr	**0.0402**	**0.0399**	**0.0402**	**0.0401**

5.0 Quality Assurance/Quality Control

As part of the comprehensive performance test, a project-specific quality assurance/quality control (QA/QC) effort was developed and implemented. This QA/QC effort was documented in the QAPjP, and was tailored to meet the specific needs of this test effort.

The results of the QA/QC activities demonstrate that the quality of project measurement data is well documented and that the data are reliable, defensible, and meet project objectives.

The primary objectives of the QA/QC effort were to control, assess, and document data quality. To accomplish these objectives, the QA/QC approach consisted of the following key elements:

- Definition of quality assurance objectives that reflect the overall technical objectives of the measurement program;
- Design of a sampling, analytical, QA/QC and data analysis system to meet those objectives;
- Evaluation of the performance of the measurement system; and
- Initiation of corrective action when measurement system performance does not meet the specifications

The CPT of the incinerators at Veolia Sauget was conducted in accordance with the QA procedures described in the *Quality Assurance Project Plan for the Comprehensive Performance Test of the Units 2 and 3 Fixed Hearth Incinerators and the Unit 4 Rotary Kiln Incinerator, September 25, 2013.* These QA procedures include sampling and analytical procedures, along with specified calibration requirements, QC checks, data reduction and validation procedures, and sample tracking. A review of analytical results for QA/QC samples and assessment of overall data quality is presented in this section. Detailed QC information is presented in the appendices to this report.

The sections below present discussions of the QA/QC activities associated with the overall quality of the data associated with the CPT. Although several minor issues are identified and discussed in the following sections, the overall conclusion of the QA/QC assessment is that the results of the testing are of high quality, and are appropriate for their intended use.

A few minor issues were identified during the QA/QC assessment. These issues and their impact on data usability are discussed in greater detail in following sections.

5.1 Audit Samples

Audit samples were acquired from a Sigma-Aldrich RTC for metals and hydrogen chloride. These samples were submitted to the analytical laboratory along with the samples collected during the CPT. These results are included on the laboratory reports generated by Test America. The evaluation of the results by Sigma Aldrich RTC is presented in Appendix G6. The results of the audit samples are summarized in Table 5-1. Laboratory analysis of each audit sample was rated as "Acceptable".

Table 5-1. Results of Analysis of Audit Samples

	Result	Assigned Value	Evaluation
Metals on Filter			
Arsenic (µg/filter)	20.31	21.0	Acceptable
Beryllium (µg/filter)	12.16	11.3	Acceptable
Cadmium (µg/filter)	11.72	11.2	Acceptable
Chromium (µg/filter)	17.67	16.1	Acceptable
Lead (µg/filter)	21.60	21.0	Acceptable
Metals in Impinger Solution			
Arsenic (µg/ml)	0.1884	0.201	Acceptable
Beryllium (µg/ml)	0.0576	0.0530	Acceptable
Cadmium (µg/ml)	0.1053	0.105	Acceptable
Chromium (µg/ml)	0.2017	0.202	Acceptable
Lead (µg/ml)	0.2102	0.202	Acceptable
Mercury (ng/ml)	13.9	15.0	Acceptable
Hydrogen Chloride in Impinger Solution (mg/L)	30.4	27.6	Acceptable

5.2 Analysis of Waste Feeds

5.2.1 Analysis of Waste Feeds for Metals

Samples of waste feed materials were analyzed for mercury using CVAA, according to SW-846 Method 7470A. These same samples were also analyzed for arsenic, beryllium, cadmium, chromium, and lead using ICPES, according to SW-846 Method 6010B. These samples were prepared for analysis using appropriate extraction or dilution techniques. Quality assurance and quality control activities associated with these analyses included:

- Sample handling and preservation;
- Preparation and analysis of samples within specified holding times;
- Preparation and analysis of laboratory blanks;

- Preparation and analysis of laboratory control samples;
- Duplicate preparation and analysis of received samples;
- Analysis of duplicate samples; and
- Preparation and analysis of matrix spike (MS) and matrix spike duplicate (MSD) samples.

Review of these QA/QC activities indicates that these data are supportable, and useable. See the detailed data quality assessment in Appendix H. The following issues were identified as part of this data quality assessment:

- The QAPjP specifies the performance of matrix spike/matrix spike duplicates with 75-125% recovery, 0-20% RPD for mercury and 70-130% recovery, 0-20% RPD for other metals. One hundred eighty-seven of 204 MS or MSD met the specifications for recovery. One hundred of 102 MS/MSD pairs met the specification for RPD. The following samples were outside the specification:

  — VS2-CS-11B-COMP2B: Arsenic recovery 67% in MS, arsenic RPD 23%, chromium recovery 149% and 172% in MS/MSD;
  — VS2-CS-15B-COMP2B: chromium recovery 150% in MSD;
  — VS3-CS-12B-COMP 2B: chromium recovery 131 and 145% in MS/MSD;
  — VS4-BS-13B-COMP2B: chromium recovery 132 and 134% in MS/MSD, lead recovery 208% in MSD;
  — VS4-CS-13B-COMP2B: chromium recovery 164 and 186% in MS/MSD, lead recovery 406% in MS, lead RPD 49%, mercury recovery 61 and 45% in MS/MSD; and
  — VS4-LBW-12B-COMP2B: cadmium recovery 145% in MSD, mercury recovery 71 and 66% in MS/MSD.

  Metals feedrates are developed as a sum of totals fed to the system as LVM (arsenic, beryllium and chromium); SVM (cadmium and lead) and mercury. The MS/MSD outliers detailed above indicate increased uncertainty in the concentrations of the metals in those streams. The contribution of these streams to the total feedrates of LVM, SVM and mercury are negligible, and the increased uncertainty in these concentrations has no impact on the conclusions of the report. No data are qualified or invalidated based on MS/MSD results.

5.2.2 Analysis of Waste Feeds for Physical and Chemical Parameters

Samples of liquid and solid waste feed materials were analyzed for ash content, total chlorine, density, gross calorific value, kinematic viscosity, and percent moisture, using the following methods:

- Ash Content: ASTM D482;
- Total Chlorine: KNOX WC-0016;
- Density: ASTM D1963;
- Gross Calorific Value: ASTM D240, ASTM D5865;
- Kinematic Viscosity: ASTM D 445; and
- Percent Moisture: Method 160.3, ASTM D017.

Quality assurance and quality control activities associated with these analyses included:

- Sample handling and preservation;
- Preparation and analysis of samples within specified holding times;
- Preparation and analysis of laboratory blanks;
- Preparation and analysis of laboratory control samples;
- Preparation and analysis of matrix spike and matrix spike duplicate samples;
- Collection and analysis of duplicate samples; and
- Preparation and analysis of selected samples in duplicate.

Review of these QA/QC activities indicates that data are supportable, and usable for the purpose of demonstrating regulatory compliance. See the detailed data quality assessment in Appendix H. The following issues were identified during the course of the QA/QC assessment:

- Selected samples were analyzed in duplicate. Ninety of 96 duplicate analyses met the QAPP specifications (see table below). The outliers are:
  - Ash in VS2-HBW-13B-COMP2B; results of 582 and 646 mg/kg; RPD of 10.4%;
  - Gross Calorific Value in VS2-LBW-15B-COMP2B; results of 178 and 152 Btu/lb; RPD of 15.8%;
  - Chlorine in VS3-CS-11A-COMP 1; results of 253 and 325 mg/kg; RPD of 24.9%;
  - Chlorine in VS4-BS-11A-COMP1; results of 171 and 221 mg/kg; RPD of 25.5%;
  - Ash in VS4-HBW-12B-COMP2B-DUP; results of 943 and 1050 mg/kg; RPD of 10.7%; and
  - Ash VS4-HBW-13A-COMP1; results of 1,500 and 928 mg/kg; RPD of 47.1%.

  The outliers for duplicate analysis have a negligible impact on the usability of the data. The chlorine carried in containerized solids and bulk solids is negligible (<1%) compared to the chlorine provided by the spiking material. The ash carried in high-Btu waste is negligible (<1%) compared to the ash provided by the bulk or

containerized solids. The heat input results in low-Btu waste are near the detection limit. Increased uncertainty is expected close to the detection limit. No data are qualified or invalidated based on the results of duplicate analysis.

- No duplicate analysis was performed for moisture in solid waste streams. This duplicate analysis was specified in the QAPjP. This has no impact on the usability of the data. Moisture results are used only to characterize the waste feed materials, and are not used in any demonstration of compliance. No data are qualified or invalidated based on this omission.

5.3 Stack Gas

5.3.1 Isokinetic Sample Collection

Isokinetic sampling trains were used for the collection of samples for the determination of:

- Particulate matter according to EPA Method 5;
- Hydrogen chloride and chlorine according to Modified EPA Method 26A;
- Metals according to EPA Method 29; and Polychlorinated dibenzodioxins and polychlorinated dibenzofurans according to SW-846 Method 0023A.

Quality assurance and quality control activities associated with the collection of these samples included:

- Collection of the specified volumes of stack gas over the specified duration;
- Collection of stack gas within 90-110% of isokinetic;
- Maintaining the probe, filter and (on applicable trains) heated transfer line at the specified temperatures;
- Maintaining the impinger exit and (on applicable trains) the condenser exit at the specified temperature;
- Performing sampling train leak checks before sample collection, at port changes, and after sample collection;
- Performing pitot tube leak checks before and after sample collection; and
- Recording all data on pre-printed data sheets.

Review of these QA/QC activities indicates that sampling was performed according to the methods and the QAPjP. See the detailed data quality assessment in Appendix H. Sampling data sheets are presented in Appendix F. Calibration documentation for all field equipment is presented in Appendix I. No issues were identified as part of the data quality assessment.

5.3.2 Analysis of Stack Gas Samples for Determination of PM

Samples of stack gas for determination of particulate matter (PM) were collected in a sampling train meeting the requirements EPA Method 5.

Quality assurance and quality control activities associated with this analysis included:

- Sample handling and preservation;
- Preparation and analysis of samples within specified holding times;
- Preparation and analysis of laboratory blanks;
- Collection and analysis of field blanks;
- Repeatability of sequential weighings; and
- Daily balance calibration.

Review of these QA/QC activities indicates that these data are supportable, and useable. See the detailed data quality assessment in Appendix H. The following issue was identified during the QA/QC review:

- The field blank probe and nozzle rinse had observable levels near the detection limit. The levels of particulate material observed in the PNR samples were very low, and near the detection limit. Levels in the field samples were similar to these results, and may have a positive bias. As a positive bias is conservative relative to the estimation of emissions, no data are qualified or invalidated based on field blank results.

5.3.3 Analysis of Stack Gas Samples for Determination of HCl/Cl_2

Samples of stack gas for determination of hydrogen chloride and chlorine (HCl/Cl_2) were collected in a Modified EPA Method 26A sampling train. Samples recovered from this sampling train were analyzed for hydrogen chloride and chlorine using ion chromatography, according to EPA Method 26A.

Quality assurance and quality control activities associated with these analyses included:

- Sample handling and preservation;
- Preparation and analysis of samples within specified holding times;
- Preparation and analysis of laboratory blanks;
- Collection and analysis of field blanks;
- Preparation and analysis of laboratory control samples;
- Preparation and analysis of matrix spike and matrix spike duplicate samples; and
- Preparation and analysis of all samples in duplicate.

Review of these QA/QC activities indicates that these data are supportable, and useable. See the detailed data quality assessment in Appendix H. The following issue was identified during the QA/QC review:

- Hydrogen chloride was consistently detected in the field blank samples. The levels of hydrogen chloride observed (approximately 60 μg per sample) are well below the levels observed in the field samples (all greater than 1,800 μg per sample). These levels are negligible and have no impact on the data. No data are qualified or invalidated based on blank results.

5.3.4 Analysis of Stack Gas Samples for Determination of Metals

Samples for determination of metals in stack gas were collected according to EPA Method 29. The filters, impinger solutions and rinses were analyzed for mercury by CVAA according to SW-846 Method 7470A and for arsenic, beryllium, cadmium, chromium, and lead by ICPES, according to SW-846 Method 6010B.

Quality assurance and quality control activities associated with these analyses included:

- Sample handling and preservation;
- Preparation and analysis of samples within specified holding times;
- Preparation and analysis of laboratory blanks;
- Collection and analysis of field blanks;
- Preparation and analysis of media check samples;
- Preparation and analysis of laboratory control samples (LCS) and laboratory check sample duplicates (LCSD);
- Preparation and analysis of matrix spike and matrix spike duplicate samples; and
- Preparation and analysis of post digestion spike (PDS) and post digestion spike duplicate (PDSD) samples.

Review of these QA/QC activities indicates that these data are supportable, and useable. See the detailed data quality assessment in Appendix H. The following issues were identified during the QA/QC review:

- Arsenic was found above the detection limit in laboratory blank samples associated with analysis of PNR/filter samples. The blank results for arsenic in the laboratory blanks are near the detection limit, and similar to or below the results for the field samples. This may indicate a slight positive bias in the field results. Samples were not corrected for field blank results. No results are invalidated or qualified based on blank results.

- Cadmium and mercury were each found in one field blank sample. The single positive result for cadmium in one field blank is similar in magnitude to the field results. The single positive result for mercury in one field blank is near the detection limit, and well below many of the field results. These may indicate a slight positive bias in the field samples. Samples were not corrected for field blank results. No results are invalidated or qualified based on blank results.
- Chromium was consistently observed in field blanks and media check samples. The consistent observation of chromium in field blank and media check samples is at a lower level than the field samples. This may indicate a slight positive bias in the results for the field samples. Samples were not corrected for field blank results. No results are invalidated or qualified based on blank results.

5.3.5 Analysis of Stack Gas Samples for Determination of Dioxins/Furans

Samples for determination of the polychlorinated dibenzodioxins and dibenzofurans (dioxins/furans) were collected according to the methodology described in SW-846 Method 0023A. The filters, sorbent traps, and rinses from these samples were prepared for analysis according to SW-846 Method 0023A, and the resulting extracts analyzed for dioxins/furans by high-resolution GCMS, according to SW-846 Method 8290.

Quality assurance and quality control activities associated with these analyses included:

- Sample handling and preservation;
- Preparation and analysis of samples within specified holding times;
- Preparation and analysis of laboratory blanks;
- Collection and analysis of field blanks;
- Preparation and analysis of media check samples;
- Preparation and analysis of laboratory control samples and laboratory check sample duplicates; and
- Addition of surrogate compounds to each sample.

Review of these QA/QC activities indicates that these data are supportable, and useable. See the detailed data quality assessment in Appendix H. The following issue was identified during the QA/QC review of these data:

- All target analytes except 2,3,7,8-TCDD were observed in a media check sample, laboratory blank or field blank. The levels observed in the blank samples are very low, typically near the detection limit. Typically these levels are below the levels observed in the field samples. This indicates a potential positive bias in the field samples, which is conservative relative to the determination of emission rate. No data are qualified or invalidated based on blank results.

5.3.6 Monitoring of Stack Gas for O_2, CO_2, and THC

The stack gas was monitored for oxygen (O_2), carbon dioxide (CO_2), and total hydrocarbons (THC) according to EPA Methods 3A and 25A, respectively.

Quality assurance and quality control activities associated with continuous emission monitoring include:

- Use of calibration gas standards of known and acceptable quality;
- Use of calibration gas standards in the specified ranges,
- Performance of system bias checks,
- Performance of calibration error tests; and
- Performance of zero and span drift checks.

Review of these QA/QC activities indicates that these data are supportable and usable. See the data quality assessment in Appendix H. Copies of certifications of calibration gas standards are presented in Appendix I. Raw data for continuous emission monitors are presented in Appendix F. The following issue was identified during the QA/QC review of this data:

- Seventy of 72 drift checks for total hydrocarbons met method specifications. The two outliers were both during Unit 2 Run 1B. A drift of 8.0% was seen at 1800, and a drift of 8.3% was observed at 1909. In accordance with EPA Method 25A, the total hydrocarbon analyzer was immediately re-calibrated following each of the drift excursions. The data from the run was then recalculated using both calibration curves and the higher (more conservative) result reported. As the average THC was well below the standard, and that the conservative recalculation approach specified in the method was implemented, any uncertainty in these data has no impact on the conclusion of the report and the demonstration of compliance. No data are flagged or invalidated based on the calibration drift results.

5.4 Process Data

In accordance with the MACT requirements, all process instrumentation was calibrated. A *Continuous Monitoring System Performance Evaluation Test Plan* (CMSPETP) was prepared and defines the calibration procedures and acceptance criteria. The testing specified in the CMSPETP was performed prior to the CPT. Data from the CMSPET is presented in Appendix D.

5.5 Spiking

As detailed in Sections 1.3 and 2.3 and Appendix B, during the CPT, liquids and solids were spiked into the incinerator feed. QA/QC activities associated with the spiking included:

- Use of spiking materials of known and acceptable quality;
- Collection of data on data sheets and appropriate data acquisition systems;
- Calibration of pumps; and
- Documentation of preparation of spiking packets.

Review of these QA/QC activities indicates that the spiking data are supportable and useable.