# Comprehensive Performance Test Plan for Fixed Hearth Unit 2 in Accordance with 40 CFR §63 Subpart EEE

**Prepared for:**

**Veolia ES Technical Solutions, L.L.C.**
**7 Mobile Avenue**
**Sauget, IL 62201**

**Prepared by:**

**URS Corporation**
**9400 Amberglen Blvd.**
**Austin, TX 78729**

Revised
September 19~~August 2~~, 2013

# Table of Contents

**Page**


**1.0 Introduction ..... 1-1**
1.1 Program Summary ..... 1-1
1.2 Facility/Unit Identification ..... 1-2
1.2.1 General ..... 1-2
1.2.2 Facility ID, Mailing Address, and Primary Contacts ..... 1-2
1.2.3 Incinerator Overview ..... 1-3
1.3 Test Objectives ..... 1-3
1.3.1 General ..... 1-3
1.3.2 Test Protocol Summary ..... 1-5
1.4 Performance Test Plan Organization ..... 1-8

**2.0 Engineering Description ..... 2-1**
2.1 Process Overview ..... 2-1
2.2 Waste Feed Systems ..... 2-1
2.2.1 Unit 2 Liquid Waste Feed System and Blending Operations ..... 2-1
2.2.1.1 Organic and Aqueous Liquid Waste Feeds ..... 2-3
2.2.1.2 Packaged Solids ..... 2-3
2.2.1.3 Specialty Liquid Feeds and Gases ..... 2-4
2.3 Manufacturer, Make and Model of the Incinerator ..... 2-4
2.3.1 Combustion Chamber and Burners ..... 2-4
2.3.2 Secondary Combustion Chamber ..... 2-5
2.3.3 Location of Combustion Zone Temperature Device ..... 2-6
2.3.4 Hazardous Waste Residence Time ..... 2-6
2.3.5 Combustion System Leak ..... 2-6
2.3.6 Emergency Safety Vent ..... 2-6
2.4 Procedures for Rapidly Stopping Hazardous Waste Feed and Controlling Emissions During Equipment Malfunction ..... 2-7
2.5 Air Pollution Control Equipment ..... 2-7
2.5.1 Air Pollution Control System Descriptions ..... 2-7
2.5.1.1 Lime System ..... 2-8
2.5.1.2 Spray Dry Absorber ..... 2-9
2.5.1.3 Fabric Filter ..... 2-10
2.5.1.4 Induced Draft Fan and Stack ..... 2-11
2.6 Stack Emissions Monitoring ..... 2-11
2.6.1 CEM System Description ..... 2-11
2.7 Process Monitoring and Control ..... 2-12
2.8 Automatic Waste Feed Cut-off System ..... 2-14
2.8.1 AWFCO System Testing ..... 2-15
2.9 Air Pollution Control Equipment Maintenance Practices ..... 2-16
2.9.1 Program Overview ..... 2-16
2.9.2 Test Program Preparation Activities ..... 2-16

# Table of Contents (continued)

Page

**3.0 Incinerator Feed Stream Descriptions ..... 3-1**
3.1 General ..... 3-1
3.2 High Volume Wastes ..... 3-2
3.2.1 Liquid Wastes ..... 3-2
3.2.2 Bulk Solids ..... 3-2
3.2.3 Containerized Waste ..... 3-2
3.2.4 Gaseous Wastes ..... 3-2
3.3 Auxiliary Fuels ..... 3-3

**4.0 Performance Test Protocol ..... 4-1**
4.1 General Description ..... 4-1
4.2 Performance Standards ..... 4-1
4.3 Test Condition ..... 4-2
4.3.1 Maximum Feedrate of Ash and Chlorine, Minimum Sorbent and Carrier Fluid Flowrates to the SDA ..... 4-2
4.3.2 Maximum Feedrate of Metals and Chlorine, Maximum Waste Fedrates ..... 4-3
4.4 Establishing Operating Parameter Limits ..... 4-6
4.5 Waste Feed Spiking ..... 4-10
4.5.1 Inorganic Constituents ..... 4-11
4.5.2 Spiking for the LVM Category ..... 4-12
4.5.3 Spiking for the SVM Category ..... 4-12
4.5.4 Spiking for Mercury ..... 4-13
4.5.5 Spiking for Chlorine Loading ..... 4-13
4.5.6 Spiking for Ash Loading ..... 4-14
4.6 Metals Extrapolation Method ..... 4-14
4.7 Description, Preparation, and Delivery of Feeds for the CPT ..... 4-16
4.8 Testing During Cleaning Cycles ..... 4-16
4.9 Conditioning Time Needed to Reach Steady State ..... 4-17
4.10 AWFCO System during the CPT ..... 4-17
4.11 Anticipated Test Schedule ..... 4-17
4.12 Reporting ..... 4-23

**5.0 Sampling, Analysis, and Monitoring Procedures ..... 5-1**
5.1 Sampling Locations and Procedures ..... 5-1
5.1.1 Liquids Sampling Procedures ..... 5-1
5.1.2 Solids Sampling Procedures ..... 5-5

# Table of Contents (continued)

**Page**


5.1.3 Stack Gas Sampling Procedures ..... 5-6
5.1.3.1 Sample Port Location ..... 5-6
5.1.3.2 EPA Methods 2 and 4 (Flowrate and Moisture) ..... 5-6
5.1.3.3 EPA Method 29 (Metals) ..... 5-7
5.1.3.4 EPA Method 5 (PM) / EPA Method 26A ($HCl/Cl_2$) ..... 5-7
5.1.3.5 Modified EPA Method 26A ($HCl/Cl_2$) ..... 5-7
5.1.3.6~~5~~ SW-846 Method 0023A (Dioxins/Furans) ..... 5-8
5.1.3.7~~6~~ Continuous Emissions Monitoring (THC, $CO_2$, CO and $O_2$) ..... 5-9
5.2 Analysis Procedures ..... 5-9
5.2.1 Composition and Physical Parameters Analysis ..... 5-10
5.2.2 Metals Analysis ..... 5-10
5.2.3 Particulate Matter Analysis ..... 5-10
5.2.4 $HC/Cl_2$ Analysis ..... 5-10
5.2.5 Dioxins/Furans Analysis ..... 5-11
5.3 Process Monitoring Procedures ..... 5-11
5.4 Quality Assurance/Quality Procedures ..... 5-11
5.4.1 Sampling QA/QC ..... 5-13
5.4.2 Procedures for Analytical Quality Control ..... 5-14

APPENDIX A Continuous Monitoring System Performance Evaluation Test Plan

# List of Tables

**Page**


1-1 Applicable HWC MACT Emission Standards....1-4
1-2 Data Used To Establish OPLs....1-7
1-3 Cross References of Performance Test Requirements....1-9

2-1 Technical Information Summary on Unit 2....2-5
2-2 Unit 2 Continuous Emission Monitors....2-12
2-3 Current HWC MACT AWFCO Parameters for Unit 2....2-14

3-1 Summary of Major HAPs Processed....3-2
3-2 Top Volume Liquid Waste Streams....3-4
3-3 Top Bulk Solid Waste Streams....3-4
3-4 Top Containerized Solid Waste Streams....3-5
3-5 Typical Properties for Natural Gas....3-5

4-1 Target Feedrates and Operating Conditions....4-4
4-2 HWC MACT OPLs to be Established During the Metals Demonstration Test....4-5
4-3 Emission Standards versus Operating Parameters....4-7
4-4 Metals Evaluation Plan....4-13
4-5 Daily Schedule for the Subsequent CPT of Unit 2....4-20

5-1 Measurement Frequency....5-3
5-2 Sampling Methods....5-4
5-3 Summary of Analytical Methods....5-9
5-4 Summary of Matrix Specific QC Sample Requirements....5-13


# Figure List

**Page**


2-1 Unit 2 Process Flow Diagram....2-2
2-2 Hydrated Lime Specifications....2-8

# 1.0 Introduction

## 1.1 Program Summary [40 CFR § 63.1207(f) and § 63.7(c)(2)(i)]

Veolia ES Technical Solutions, L.L.C. (Veolia) operates three incinerators at its Sauget, Illinois facility. Two of the incinerators are fixed hearth units (Units 2 and 3), and the third incinerator is a rotary kiln unit (Unit 4). All of the incinerators treat certain wastes that are classified as hazardous under state and/or federal regulations, and are subject tothe National Emission Standards for Hazardous Air Pollutants (NESHAPs) for Hazardous Waste Combustors (Title 40 of the Code of Federal Regulations, Part 63 [40 CFR Part 63], Subpart EEE), (i.e., the HWC MACT).

In August and September of 2008, Veolia conducted tests of Units 2, 3, and 4 required by the information collection requests from USEPA Region 5 dated June 5, 2008 and September 12, 2008. Those tests began on August 11, 2008 for Unit 2, August 5, 2008 for Unit 3, and August 21, 2008 for Unit 4. The test plans for these tests were approved by USEPA Region 5. The tests were designed to demonstrate compliance with the applicable emission standards of the HWC MACT for metals codified at 40 CFR § 63.1219(a)(2), 40 CFR § 63.1219(a)(3), and 40 CFR § 63.1219(a)(4) for mercury, cadmium and lead (i.e., Semivolatile Metals – SVM), and arsenic, beryllium, and chromium (i.e., Low Volatility Metals - LVM). The tests also established Operating Parameter Limits (OPLs) for mercury, and SVM and LVM codified at 40 CFR § 63.1209(l) and 40 CFR § 63.1209(n), respectively.

The initial Comprehensive performance tests of Units 2, 3, and 4 commenced on December 8, 2009 for Unit 2; on December 1, 2009 for Unit 3; and on December 16, 2009 for Unit 4. The Comprehensive Performance Tests were performed in accordance with Comprehensive Performance Test Plans approved by USEPA Region 5 on November 25, 2009. The HWC MACT, at 40 CFR § 63.1207(d), states *"The date of commencement of the initial comprehensive performance test is the basis for establishing the deadline to commence the initial confirmatory performance test and the next comprehensive performance test. You may conduct performance testing at any time prior to the required date. The deadline for commencing subsequent confirmatory and comprehensive performance testing is based on the date of commencement of the previous comprehensive performance test."* Veolia Sauget understands that EPA Region 5's position regarding commencement of the subsequent CPTs is based on the initiation of the metals tests performed in 2008, stating in a letter dated August 3, 2012—Veolia must submit to EPA a notification of intent to conduct a CPT and a site-specific test plan for the CPT at least one year before the performance test. 40 CFR § 63.1207(e)(1)(i)…by September 5, 2012‖. Veolia ~~is~~ submitt~~ed~~ing to EPA its notification of intent and site-specific test plan for the subsequent CPT by this date.

This document is a Comprehensive Performance Test Planfor Unit 2 for the subsequent comprehensive performance test (CPT) and provides notification that Veolia Sauget intends to start the CPTs of the three incinerators at the Sauget facility by September 5, 2013. All of the applicable parameters of the HWC MACT including dioxins/furans, total hydrocarbons (THC), carbon monoxide (CO), particulate matter (PM), hydrogen chloride/chlorine gas ($HCl/Cl_2$), mercury, SVM, and LVM will be determined during the CPT.

Per 40 CFR §63.1206(b)(7)(i)(A), compliance with the DRE standard is required to be demonstrated only one time, and Veolia Sauget demonstrated DRE during RCRA Trial Burns of Units 2, 3, and 4 performed in January 1993, November 1996, and December 1995, respectively. The HWC MACT requires that DRE only be demonstrated one time as long as—you do not feed hazardous waste at a location in the combustion system other than the normal flame zone‖ (§63.1207(c)(2)(iv)). Veolia will not re-demonstrate DRE for Unit 2 in the subsequent CPT. DRE, and the associated OPLs, were demonstrated during the 1993 trial burn, and operations of the incinerator have not significantly changed since that test.

This test (i.e., the subsequent CPT) is designed to demonstrate applicable emission standards and establish OPLs as required by the HWC MACT for Dioxins/Furans, total hydrocarbons (THC), carbon monoxide (CO), particulate matter (PM), hydrogen chloride/chlorine gas ($HCl/Cl_2$), mercury, SVM, and LVM. The results of this test will be used to revise the current NOC.

## 1.2 Facility/Unit Identification

### 1.2.1 General

This CPT Plan is designed to demonstrate applicable emission standards and establish OPLs as required by the HWC MACT for dioxins/furans, total hydrocarbons (THC), carbon monoxide (CO), particulate matter (PM), hydrogen chloride/chlorine gas ($HCl/Cl_2$), mercury, SVM, and LVM. This is a commercial hazardous waste incineration facility that treats liquid and solid wastes that are classified as both hazardous and non-hazardous.

### 1.2.2 Facility ID, Mailing Address, and Primary Contacts

The facility address is:

Veolia ES Technical Solutions
7 Mobile Avenue
Sauget, IL 62201
Facility ID#: ILD098642424

The facility contact is:

Mr. Dave Klarich
Phone: 618-271-2804
Email: David.Klarich@veoliaes.com

### 1.2.3 Incinerator Overview

Unit 2 is a fixed hearth incineration system with primary and secondary combustion chambers that treats solid wastes as well as aqueous and organic liquids. The process is monitored and controlled by a distributed control system (DCS) capable of continuously monitoring the process to assure all operational parameters are within regulatory and permit limits while waste is being fed to the unit. In addition, this incinerator is equipped with a Continuous Emissions Monitoring System (CEMS) that continuously samples the exhaust gases for carbon monoxide and oxygen in the stack gas exhaust stream.

## 1.3 Test Objectives

### 1.3.1 General

This document presents Veolia's plan for the subsequent CPT for the Final Replacement Standards of the HWC MACT and is designed to demonstrate compliance with the standards and associated OPLs of the HWC MACT for existing incinerators at §63.1219. The CPT is designed to:

- Demonstrate that the incinerator meets the applicable HWC MACT emission limits while treating hazardous waste; and
- Re-establish operating parameter limits (OPLs) on key operating variables that will ensure that the incinerator operates within the HWC MACT emission limits while treating hazardous waste.

The test program will include feeding a variety of liquid and solid waste materials to the incinerator, sampling and analyzing the feedstreams, spiking waste feedstreams with metals and chlorine, monitoring certain process parameters, and conducting emissions testing. The emissions standards that will be demonstrated under the HWC MACT regulations are summarized in Table 1-1.

**Table 1-1. Applicable HWC MACT Emission Standards**

| Emissions Parameter | Limit | Citation |
|---|---|---|
| Dioxins/Furans (TEQ basis) | ≤ 0.20 ng/dscm | 40 CFR 63.1219(a)(1)(i)(A) |
| Mercury | ≤ 130 µg/dscm | 40 CFR § 63.1219(a)(2) |
| Semivolatile Metals (SVM) (Cadmium and Lead) | ≤ 230 µg/dscm | 40 CFR § 63.1219(a)(3) |
| Low Volatile Metals (LVM) (Arsenic, Beryllium and Chromium) | ≤ 92 µg/dscm | 40 CFR § 63.1219(a)(4) |
| Carbon Monoxide (CO) | ≤ 100 ppmv, dry | 40 CFR § 63.1219(a)(5)(i) |
| Total Hydrocarbons (THC) | ≤ 10 ppmv, dry | 40 CFR § 63.1219(a)(5)(ii) |
| Hydrogen Chloride & Chlorine ($HCl/Cl_2$) | ≤ 32 ppmv dry, as $Cl^-$ | 40 CFR § 63.1219(a)(6) |
| Particulate Matter (PM) | ≤ 0.013 gr/dscf | 40 CFR § 63.1219(a)(7) |
| Destruction and Removal Efficiency (DRE) | ≥ 99.99 % | 40 CFR § 63.1219(c)(1) |

Note: All emission concentrations are corrected to 7% oxygen.

The objectives for the subsequent CPT for the Final Replacement Standards of the HWC MACT are:

- Demonstrate compliance with stack gas emissions less than or equal to the following limits, corrected to 7% $O_2$:
  - Carbon Monoxide: 100 ppmv, dry;
  - Total Hydrocarbons: 10 ppmv, dry;
  - Dioxins/Furans: 0.20 ng TEQ/dscm;
  - Particulate Matter (PM): 0.013 grains/dscf;
  - Mercury: 130 µg/dscm;
  - Semivolatile Metals (SVM) (Cd and Pb combined): 230 µg /dscm;
  - Low Volatility metals (LVM) (As, Be and Cr combined): 92 µg /dscm; and
  - Hydrogen Chloride/Chlorine ($HCl/Cl_2$): 32 ppmv as $Cl^-$ equivalent, dry.
- Compliance with the DRE standard (99.99% DRE) is demonstrated using data from a previous RCRA Trial Burn.
- Establish limits for operating parameters.
- Conduct a Continuous Monitoring System (CMS) performance evaluation test.
- Conduct a Relative Accuracy Test Audit (RATA) for the CO and $O_2$ Continuous Emissions Monitoring Systems (CEMS) if a RATA of the CO and $O_2$ CEMS does not occur within 60 days of the CPT.

### 1.3.2 Test Protocol Summary

A brief description of the subsequent CPT is provided below, and a definition of the applicable emission limits and the resulting operating parameter limits (OPLs) are given in Section 4.0. The test condition of the subsequent CPT of Unit 2 will include one mode of operation, and one set of OPLs will be developed.

In the first part of the test, Veolia will demonstrate compliance with the particulate matter and $HCl/Cl_2$ standards of the HWC MACT while the plant is operating to establish the maximum ash feedrate, maximum chlorine feedrate, maximum combustion gas flowrate, and other applicable OPLs as required by the HWC MACT for the particulate matter and $HCl/Cl_2$ standards. Compliance with the standard for carbon monoxide will also be demonstrated during this test.

In the second part of the test, Veolia will demonstrate compliance, and develop OPLs, with the dioxins/furans, THC, CO, LVM, SVM, and mercury standards of the HWC MACT while the plant is operating to establish maximum total hazardous waste feedrate, maximum pumpable hazardous waste feedrate, minimum primary combustion chamber (PCC) temperature, minimum secondary combustion chamber (SCC) temperature, maximum LVM, SVM, and Hg feedrates, maximum chlorine feedrate, maximum combustion gas flowrate, and maximum inlet temperature to the baghouse. Ash will be fed to the incinerator at normal (or higher) levels during this test. Compliance with the standard for carbon monoxide will also be demonstrated during this test. Although Veolia will be establishing a minimum PCC temperature during this part of the test, the incinerator will be operated at normal temperatures, which will be higher than the current minimum PCC temperature OPL, and will use the average temperature of the runs to establish the new PCC temperature OPL.

Per 40 CFR §63.1206(b)(7)(i)(A) compliance with the DRE standard is required to be demonstrated only one time and Veolia demonstrated DRE for Unit 2 in a January 1993 RCRA trial burn. Veolia will not re-demonstrate DRE for Unit 2 in the subsequent CPT for the Final Replacement Standards of the HWC MACT. DRE, and the associated OPLs, were demonstrated during the 1993 trial burn, and operations of the incinerator have not significantly changed since that test. The resulting OPLs associated with the standard for DRE, from the NOC, are:

- Maximum Total Pumpable Waste Feedrate 3,107 lb/hr;
- Maximum Total Waste Feedrate 4,017 lb/hr;
- Minimum Stack Gas Flowrate 15,605 acfm;
- Minimum Temperature in the Primary Combustion Chamber 1,658°F; and
- Minimum Temperature in the Secondary Combustion Chamber 1,848°F.

Per 40 CFR §63.1209(i), when an operating parameter applicable to multiple standards is demonstrated in performance tests not performed simultaneously, the most stringent limit applies. The OPLs required for DRE and for dioxins/furans are the same. The OPLs for maximum pumpable hazardous waste feedrate, maximum total hazardous waste feedrate, minimum temperature in the PCC, minimum temperature in the SCC, and maximum stack gas flowrate will be the more stringent demonstrated in the 1993 trial burn and the subsequent CPT. The OPL for maximum stack gas flowrate will be the most stringent demonstrated in the 1993 trial burn and the first and second portions of the subsequent CPT.

THC is typically demonstrated in conjunction with DRE. The OPLs for THC (i.e., minimum combustion chamber temperature in the primary combustion chamber, minimum combustion chamber temperature in the secondary combustion chamber, maximum flue gas flowrate, maximum pumpable hazardous waste feedrate, and maximum total waste feedrate) are the same as the OPLs for DRE (that the same for dioxins/furans). Even though DRE will not be demonstrated, THC will be demonstrated during the subsequent CPT of Unit 2 during the dioxins/furans portion of the CPT.

The CPT will be performed to demonstrate compliance and establish OPLs for targeted standards, recognizing that per 40 CFR §63.1209(h)(1),—if the performance tests…are not performed simultaneously, the most stringent limit for a parameter derived from independent performance tests applies||. Operating conditions during the subsequent CPT represent the —extreme range of normal|| conditions which will allow for establishment of HWC MACT OPLs that provide adequate operational flexibility. The operating parameter data will be used as shown in Table 1-2 to develop HWC MACT OPLs. Wastes utilized during the CPT will be typical of the wastes normally treated in Unit 2. The constituent spiking approaches are presented in Section 4.5. Upon completion of the subsequent CPT, a Notification of Compliance (NOC) will be prepared, and the OPLs of this NOC will replace those in the current NOC.

## Table 1-2. Data Used to Establish OPLs

| Demonstrated OPLs | Emission Parameters to be Demonstrated During the CPT | |
|---|---|---|
| Maximum Pumpable Waste Feedrate | DRE | 1993 |
| | THC | ✓ |
| | Dioxins/Furans | ✓ |
| Maximum Total Waste Feedrate | DRE | 1993 |
| | THC | ✓ |
| | Dioxins/Furans | ✓ |
| Maximum Stack Gas Flowrate | SVM | ✓ |
| | LVM | ✓ |
| | PM | ✓ |
| | $HCl/Cl_2$ | ✓ |
| | DRE | 1993 |
| | THC | ✓ |
| | Dioxins/Furans | ✓ |
| Minimum Combustion Chamber Temperature in the PCC | DRE | 1993 |
| | THC | ✓ |
| | Dioxins/Furans | ✓ |
| Minimum Combustion Chamber Temperature in the SCC | DRE | 1993 |
| | THC | ✓ |
| | Dioxins/Furans | ✓ |
| Maximum Total Feedrate of LVM (As, Be, Cr) | LVM | ✓ |
| Maximum Pumpable Feedrate of LVM (As, Be, Cr) | LVM | ✓ |
| Maximum Feedrate of SVM (Pb, Cd) | SVM | ✓ |
| Maximum Feedrate of Mercury (Hg) | Hg | ✓ |
| Maximum Feedrate of Ash | PM | ✓ |
| Maximum Feedrate of Total Chlorine/Chloride | $HCl/Cl_2$ | ✓ |
| | LVM | ✓ |
| | SVM | ✓ |
| Maximum Baghouse Inlet Temperature | THC | ✓ |
| | Dioxins/Furans | ✓ |
| | LVM | ✓ |
| | SVM | ✓ |
| Minimum Sorbent Feedrate | $HCl/Cl_2$ | ✓ |
| Minimum Carrier Fluid Flowrate | $HCl/Cl_2$ | ✓ |

1993 – Data in lieu from the January 1993 RCRA Trial Burn

## 1.4 Performance Test Plan Organization

This test plan has been organized in a format typically used for compliance demonstration test programs. Table 1-3 is included so that the requirements in the HWC MACT rule can be cross-referenced with the sections in this plan. The remainder of the document has been organized as follows:

- **Section 2.0** provides a general physical description of the fixed hearth incineration system and associated unit operations (including the air pollution control system) as well as an overview of the automatic waste feed cutoff (AWFCO) system and maintenance procedures.
- **Section 3.0** presents a brief discussion of the physical and chemical parameters of the waste streams treated in the incinerator that impact thermal oxidation and summarizes the hazardous air pollutants presently identified in the waste streams.
- **Section 4.0** presents the Test Protocol including planned feed and operating conditions, rationale for the test design, anticipated test schedule, and final report format.
- **Section 5.0** presents the sampling and analysis that will be performed during the test, and provides an overview of the QA/QC protocols that will be followed. A Quality Assurance Project Plan (QAPjP) has been prepared for the tests of Units 2, 3, and 4, and fully describes all sampling and analysis procedures and associated QA/QC protocols. The QAPjP is provided as a separate document.

Appendix A contains the Continuous Monitoring System Performance Evaluation Test Plan (CMS PETP) to be performed in conjunction with the CPT of Unit 2.

## Table 1-3. Cross Reference of Performance Test Requirements

| Topic | Regulatory Citation | Section in this Document |
|---|---|---|
| Program Summary | 40 CFR § 63.1207(f) and § 63.7(c)(2)(i) | 1.1 |
| Test Schedule | 40 CFR § 63.1207(f), (f)(1)(v) and § 63.7(c)(2)(i) | 4.11 |
| Data Quality Objectives (DQOs) | 40 CFR § 63.1207(f) and § 63.7(c)(2)(i) | QAPjP – 3.0 |
| Internal and External Quality Assurance Plan | 40 CFR § 63.1207(f) and § 63.7(c)(2)(i) | QAPjP – 9.0 & 12.0 |
| Analysis of Feedstreams (as fired) | 40 CFR § 63.1207(f)(1)(i) | 3.0 |
| Heating value, ash content, semi-volatile metals, low volatile metals, mercury and total chlorine | 40 CFR § 63.1207(f)(1)(i)(A) | |
| Viscosity | 40 CFR § 63.1207(f)(1)(i)(B) | |
| Identification and quantification of reasonably expected HAPs | 40 CFR § 63.1207(f)(1)(ii)(A) & (B) | |
| Detailed Engineering Description of Combustor | | 2.0 |
| Manufacturer/make/model of HWC | 40 CFR § 63.1207(f)(1)(iii)(A) | 2.3 |
| Type of HWC | 40 CFR § 63.1207(f)(1)(iii)(B) | 2.3 |
| Maximum design capacity | 40 CFR § 63.1207(f)(1)(iii)(C) | 2.3 |
| Feed systems | 40 CFR § 63.1207(f)(1)(iii)(D) & (E) | 2.2 |
| Location of combustion zone temperature device | 40 CFR § 63.1207(f)(1)(xix) | 2.3.3 |
| Hazardous waste AWFCO system | 40 CFR § 63.1207(f)(1)(iii)(F) | 2.8 |
| Design, operation and maintenance of APC | 40 CFR § 63.1207(f)(1)(iii)(G) | 2.5 |
| Justification of alternative gas flowrate measurement technique | 40 CFR § 63.1207(f)(1)(xvii) | N/A |
| Design, operation and maintenance of stack gas monitoring systems | 40 CFR § 63.1207(f)(1)(iii)(H) | 2.6 |
| Description of Waste Handling and Blending Operations | 40 CFR § 63.1207(f)(1)(ii)(C) | 2.2.1 |
| Detailed Test Protocol Including: | | |
| Description of sampling, monitoring and analytical procedures | 40 CFR § 63.1207(f)(1)(iv) | 5.0 |
| Description of Planned Feed and Operating conditions during the Performance Test | 40 CFR § 63.1207(f)(1)(vi) & (vii) | 4.0 |
| Procedures for Rapidly Stopping Hazardous Waste Feed and Controlling Emissions during Malfunction | 40 CFR § 63.1207(f)(1)(viii) | 2.3.6 |
| Determination of Hazardous Waste Residence Time | 40 CFR § 63.1207(f)(1)(ix) | 2.3.4 |
| Metal Feedrate Limit Extrapolation (if used) | 40 CFR § 63.1207(f)(1)(x) | 4.6 |
| CMS and CEMS performance evaluation plans | 40 CFR § 63.8(e)(4) and 1207(b)(1) | Appendix A |
| Documentation of Expected Levels of Regulated Constituents in Other Feedstreams that are not Analyzed | 40 CFR § 63.1207(f)(1)(xi) | 3.0 |
| Documentation of Testing duringCleaningCycle | 40 CFR § 63.1207(g)(1)(i)(C) | 4.8 |
| Documentation of Conditioning Time Needed to Reach Steady State Prior to Testing | 40 CFR § 63.1207(f)(1)(xii) | 4.9 |
| Alternative Monitoring Frequency for Wet Scrubbers (if used) | 40 CFR § 63.1207(f)(1)(xxiii) | N/A |
| Other Information Deemed Necessary by the Agency | 40 CFR § 63.1207(f)(1)(xxvii) | --- |

# 2.0 Engineering Description

## 2.1 Process Overview

Veolia operates two Fixed Hearth Dual Chambered Incinerators (Units 2 and 3) and one rotary kiln incinerator (Unit 4) at the Sauget, IL facility. The two fixed hearth units are rated at 16 million Btu/hr each. Unit 3 is a mirror image of Unit 2. Both of these units have their own waste handling systems as described in the followingsections. The only difference being Unit 2 is equipped with four (4) baghouse modules, while Unit 3 is equipped with three (3) baghouse modules. However, each incinerator is operated identically with only three baghouse modules in service during operation.

A process flow diagram for Unit 2 is presentedin Figure 2-1.

## 2.2 Waste Feed Systems [40 CFR § 63.1207(f)(1)(ii)(c) and (f)(1)(iii)(D) and (E)]

### 2.2.1 Unit 2 Liquid Waste Feed System and Blending Operations

The fixed hearth incinerators are designed to receive containers, aqueous liquid wastes, organic liquid wastes, specialty liquid feeds, gases and direct inject liquids fed through the aqueous or organic liquid feed systems. These units can receive any combination of wastes – liquid, semi-solid, solid or gases – with a heat value of up to 16 million Btu/hr.

Unit 2 is supported by storage/blend tanks located in Tank Farm #1. Rates of feed are controlled at each incinerator. Segregated liquid wastes are stored until utilized in the waste blending facilities. At that time, liquids are delivered to the blending tanks where the daily liquid feed to the incinerator is formulated, tested, and released to the incinerator. Blending of stored liquid wastes to achieve optimum heating value and viscosity for incineration takes place in Tanks 2, 4, 6 and 8. Six additional tanks (10, 20, 30, 40, 50 and 60) are used to segregate different waste stream types for blending of liquid feed to the incinerator. Several criteria are important in designing a blend from available wastes that have been segregated principally by physical and chemical properties. These include compatibility, proper range of heating value, and permit restrictions regarding elemental composition (based on emission limitations). The material is transferred through aboveground pipelines from the tank farm to the incinerator. Pipelines used to transfer liquid organic waste and aqueous waste are equipped with strainers.

**Figure 2-1. Unit 2 Process Flow Diagram**

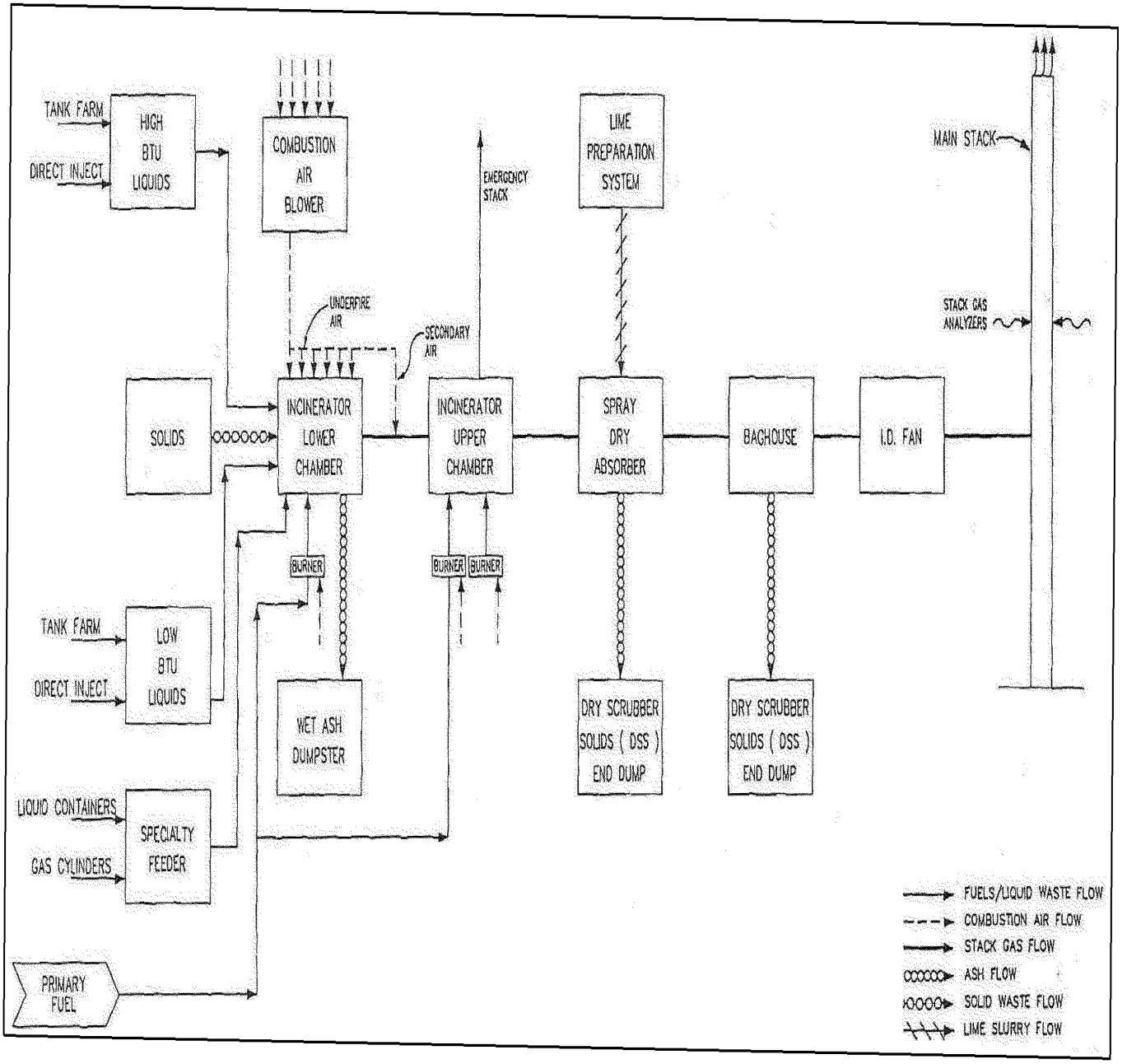

In compliance with the benzene NESHAP, all tanks are vented to individual carbon adsorption canisters for removal of organics before vapor is discharged to the atmosphere. Each carbon adsorber canister is essentially equivalent to a 55 gallon container or greater, if necessary. All tanks are equipped with conservation vents, in addition to the carbon canister adsorber. All tanks are grounded, and flame arrestors are installed between the carbon adsorbers and the tanks.

#### 2.2.1.1 Organic and Aqueous Liquid Waste Feeds

The liquid waste injectors used in the combustion chambers are air-atomizing injectors. These are used for injection of high Btu liquids, low Btu liquids and specialty feed liquids. Dual fluid injection nozzles are used for atomization of the waste. Each of the injectors is rated at 0-300 gph. The liquid waste feed nozzles are served by parallel redundant pumps and recirculation systems with back pressure control.

#### 2.2.1.2 Packaged Solids

Containers of wastes are sampled and analyzed after receipt in accordance with the facility's HWC MACT FeedStream Analysis Plan and RCRAWaste Analysis Plan. These wastes can then be delivered directly to Unit 2 or repacked into small combustible containers at the facility. Fiberboard or plastic containers (fully or partially full of waste), up to 40-gallon size, may be charged directly to the primary chamber. These will be received at the dock adjoining each fixed hearth incinerator, and charged to the incinerator within 24 hours or returned to permitted storage.

Solids, usually packaged in plastic or fiberboard containers, are introduced into the incinerator through a PLC controlled airlock-ram system located at the lower front of the primary chamber of the incinerator. The airlock is composed of a refractory-lined door, a door into the airlock enclosure, and two pneumatic rams. The action of the feeder is as follows:

- With the incinerator door closed, the airlock door is opened;
- The first pneumatic ram (load ram) pushes weighed charges of waste into the airlock chamber;
- The airlock door is closed; and
- A switch is activated either automatically or manually, which opens the door to the incinerator and actuates the ram (charge ram) that pushes the waste into the incinerator, and the ram then retracts and the incinerator door closes.

#### 2.2.1.3 Specialty Liquid Feeds and Gases

Specialty feed systems associated with Unit 2 are:

- Specialty feeder;
- Compressed gas cylinder feed system; and
- Direct inject liquid feed system.

## 2.3 Manufacturer, Make and Model of the Incinerator [40 CFR § 63.1207(f)(1)(iii)(A)]

### 2.3.1 Combustion Chamber and Burners [40 CFR §63.1207(f)(1)(iii)(B) and (C)

Unit 2 features a two-stage combustion process. Ignition of waste material takes place in the primary (lower) combustion chamber (PCC). The current OPL for the minimum temperature in the primary combustion chamber is 1,686 °F. A secondary (upper) combustion chamber (SCC) serves as an "afterburner" for process gases. Ignition of the waste takes place at temperatures in excess of 1,700 °F. The current OPL for the minimum temperature in the secondary combustion chamber is 1,877 °F.

The fixed hearth incinerator is fabricated of carbon steel. The primary chamber has an external diameter of 9 feet and is 17.5 feet long. The interior walls of the chamber are lined with approximately 10 inches of brick refractory and insulation backing, making the internal operating diameter approximately 7'2". The cross- sectional area of the chamber is thus 40.3 square feet. Table 2-1 provides a summary of the incinerator design specifications.

Liquid and solid waste feeds enter the lower chamber on the front-face of the chamber. The primary burner and the specialty feed injector are located near the front-face of the chamber and are mounted tangentially.

The primary burner is a North American burner rated at 12.0 million Btu/hr. and is used in the lower chamber to maintain permitted temperatures. It will burn only natural gas or No. 2 fuel oil. The burner system is supplied with combustion air at a static pressure of 30" water column (WC). The pilot for the primary burner will burn natural gas.

The fuel system for the lower chamber (and secondary combustion chamber) is controlled by a Factory Mutual approved burner management system complete with interlocks and safety valves.

**Table 2-1. Technical Information Summary for Unit 2**

| **Manufacturer** | **Trade Waste** | |
|---|---|---|
| Model No. | TWI-2000, | |
| Type | Fixed Hearth, Dual Chamber | |
| Date of Manufacture | 1987 | |
| **Dimensions** | **Primary Chamber** | **Secondary Chamber** |
| External Length | 17.5' | 17.5' |
| External Diameter | 9' | 9' |
| Internal Diameter | 7'2|| | 7'2|| |
| Cross-sectional area | 40.3 square feet | 40.3 square feet |
| Burners | Primary Chamber Burner | Secondary Chamber Burner |
| Manufacturer | North American | North American |
| Size | 12.0 Million Btu/hr | 6.0 Million Btu/hr |
| Fuel | Natural Gas | Natural Gas |
| Prime Mover | Induced Draft Fan 15,000 acfm @ 400$^{o}$F saturated, 22 in. water column | |

### 2.3.2 Secondary Combustion Chamber

The secondary combustion chamber (SCC) is a horizontal, cylindrical chamber that has an external diameter of 9 feet and is 17.5 feet long. The interior walls of the chamber are lined with approximately 10 inches of brick refractory and insulation backing, making the internal operating diameter approximately 7'2||. The cross- sectional area of the chamber is thus 40.3 square feet.

Following ignition of the waste material under controlled or starved-air conditions in the lower chamber, off- gases travel through a refractory-lined flue gas passage into the upper chamber, which acts as an afterburner. Turbulence is achieved by the tangential introduction of air and additional fuel in the upper chamber.

The SCC is equipped with one burner mounted tangentially on the side of the chamber. The burner is a North American burner rated at 6.0 million Btu/hr and is fueled with natural gas or fuel oil.

As with the primary chamber burner, the SCC burner is supplied with atomizing air and is equipped with a burner management system. This system controls the ignition and initiates an automatic shutoff when there is a loss of flame, combustion air supply, fuel pressure, atomizing air pressure, or pilot burner.

Leaving the upper chamber, the hot gas stream travels through 28 feet of refractory-lined stack sections before reaching the start of the gas scrubbing system. The combined volume of the upper and lower chambers, the flue gas passage and the hot crossover section is approximately 1,567 cubic feet. The total retention time of combustion gases within the system is approximately five seconds.

### 2.3.3 Location of Combustion Zone Temperature Device [40 CFR § 63.1207(f)(1)(xix)]

The thermocouple that monitors temperature in the primary combustion chamber is located on top of the chamber about 5 feet from the transition. The thermocouple that monitors temperature in the SCC is located on top of the chamber above the transition.

### 2.3.4 Hazardous Waste Residence Time [40 CFR § 63.1207(f)(1)(ix)]

The hazardous waste gas residence time for Unit 2 is calculated as follows using the OPL for the stack gas flowrate in the current NOC

- Primary Combustion Chamber Volume– 635 $ft^3$;
- Secondary Combustion Chamber Volume– 635 $ft^3$;
- Total Volume – 1,270 $ft^3$;
- Maximum Flue Gas Flow Rate– 15,147 acfm (252 $ft^3$/sec); and
- Total Combustion Zone Residence Time = (1,270 $ft^3$) / 252 $ft^3$/sec) = 5.0 sec.

Since Unit 2 is a fixed hearth unit, residence time is based on the travel length of the ash ram that functions to clear the primary combustion chamber of solid waste residue. A travel length of 110 inches for the ash ram has been established as the criteria for determining when solid waste is no longer in the combustion zone. In the case of an ash ram failure, an elapsed time of one hour has been established as the criteria for determining when solid waste is no longer in the combustion zone.

### 2.3.5 Combustion System Leak

Combustion system leaks are prevented through maintaining a totally sealed combustion chamber, coupled with the use of an induced draft fan that maintains a vacuum of normally -4 to -6 inches of water column in both combustion chambers while wastes are being fed to the unit.

### 2.3.6 Emergency Safety Vent

The incinerator is equipped with an emergency safety vent (ESV) located at the top of the secondary combustion chamber. This ESV is a refractory-lined emergency thermal relief vent (TRV) which is held in the closed position by a pneumatic cylinder. The control valve in

the line supplying air to the cylinder and the cylinder vent valve which opens the TRV are located in the control room for each unit. Valve locks (with keys attached) are utilized to deter indiscriminate operation of these valves. Opening of the TRV allows hot combustion gas to vent from the combustion system during emergency shutdown events. The purpose of the TRV is to protect the downstream APCS from excessive temperature situations. A limit switch on the TRV shuts off all waste feeds to the system as it senses that the cap is opening.

## 2.4 Procedures for Rapidly Stopping Hazardous Waste Feed and Controlling Emissions During Equipment Malfunction [40 CFR §63.1207(f)(1)(viii)]

Equipment malfunctions are identified by the control system, observation of process control variables, or by regular field inspections.

In the event of minor equipment malfunctions (e.g. waste feed or scrubber leaks), the control room operator will be notified. The control room operator will then close the waste feed valves and disable the waste feed pumps.

In the event of major equipment malfunctions (e.g. fire), the emergency stop button located in the control room will be pushed. If this button is pushed, all equipment will switch to its fail-safe position.

The extent to which emissions can be controlled in an equipment malfunction is dependent upon the type of malfunction that occurs. Waste feeds are stopped in equipment malfunctions, and depending on the nature of the malfunction, the air pollution control system remains in operation. Emissions are controlled during malfunctions by stopping all waste feeds (may occur manually or automatically), maintaining combustion zone and scrubber system temperatures within OPLs, keeping the ESV in a closed state, and maintaining negative pressure in the combustion zones.

## 2.5 Air Pollution Control Equipment [40 CFR §63.1207(f)(1)(iii)(G)]

### 2.5.1 Air Pollution Control Systems Descriptions

The air pollution control system consists of a spray dryer absorber and fabric filter baghouse modules. The air pollution control system neutralizes acidic compounds and removes particulate matter from the exhaust gas. Two subsystems, the spray dryer absorber and the fabric filter, carry out the chemical neutralization and particulate removal functions, respectively. A third subsystem, the lime system, is used to prepare and provide lime slurry to the spray dryer absorber for use in the chemical neutralization process. The induced draft fan and stack provide the mechanical energy required to transport the flue gas through the interconnecting ductwork, to its eventual discharge point to atmosphere.

### 2.5.1.1 Lime System

The lime system prepares lime slurry for use in the chemical neutralization process in sufficient supply and concentration to maintain continuous flue gas treatment in the spray dryer absorber. The system has been designed for batch mixing to provide this service. Veolia utilizes hydrated lime as its neutralizing agent in the air pollution control systems. The key neutralization parameter of the hydrated lime is the―CaO Equivalent‖. Figure 2-2 is the specification sheet for the hydrated lime that Veolia uses. Veolia has used this specific product for over 20 years and plans to continue with its use. Although, if Veolia does change suppliers or type of lime in the future, it would have a―CaO Equivalent‖ specification equal to or greater than the 72.6% shown on Figure 2-2.

**Figure 2-2. Hydrated Lime Specifications**

Mississippi Lime Company
General Offices
Alton, Illinois 62002

MISSISSIPPI ROTARY PLANT
Hydrated Lime
Code MR200
Meets AWWA and Water Chemicals Codex Specifications

Chemical Analysis

| | | | |
|---|---|---|---|
| $Ca(OH)_2$ | 96.0% | to | 97.2% |
| CaO Equivalent | 72.6 | to | 73.6 |
| CaO Total | 73.6 | to | 74.3 |
| $CaCO_3$ | 0.65 | to | 1.75 |
| $CaSO_4$ | 0.05 | to | 0.10 |
| S Equivalent | 0.012 | to | 0.024 |
| $SiO_2$ | 0.38 | to | 0.65 |
| $Al_2O_3$ | 0.20 | to | 0.30 |
| $Fe_2O_3$ | 0.07 | to | 0.10 |
| MgO | 0.40 | to | 0.55 |
| Free $H_2O$ | 0.30 | to | 0.93 |
| $P_2O_5$ | 0.008 | to | 0.012 |
| MnO | 0.0015 | to | 0.0025 |

Typical Physical Analysis

| | |
|---|---|
| Minus 100 mesh | 100.0% |
| Minus 200 mesh | 98.5 |
| Minus 325 mesh | 92.0 |

Density - Pounds per $ft^3$ - 20 to 32 (Depending upon degree of compaction)

Hydrated lime is stored in a storage bin above the lime preparation area. The storage bin is sized to hold enough hydrated lime to maintain several days of system operation at the maximum combustion rate of the incinerator. Lime is discharged through the conical storage bin bottom. The flow of the material from the bin is aided by a vibrating—live bottom,‖ or bin activator. A variable speed screw feeder is used to meter the hydrated lime in the proportions required for batch mixing lime slurry. The lime is mixed with water in a tank beneath the lime storage bin. The screw feeder speed and the rate that water is added to the lime slurry tank are variable so that the desired lime solids concentration can be achieved in the tank. The variable feed adjustments allow water and lime to be added to the lime slurry tank at a rate that will allow a batch mode of mixing. An agitator is provided in the slurry tank to mix the water and lime and to maintain the suspension of lime solids. The mixed lime slurry is pumped at a continuous rate of flow through a recirculation loop to the atomizer at a rate of up to 10 gpm.

### 2.5.1.2 Spray Dry Absorber

Unit 2 is equipped with a Spray Dryer Absorber (SDA) located immediately downstream of the secondary combustion chamber. The SDA unit is fabricated of 3/8 inch carbon steel. The function of the SDA is to:

- Further cool the combustion gases from 1,600– 2,000 °F to 300 – 500 °F;
- Neutralize and remove HCl and other acids from the combustion gases; and
- Remove a portion of the particulate matter (fly ash) from these gases.

Slurry flow to the spray dryer absorber (SDA) is metered by a flow control valve to obtain the proper feed concentration to the spray dryer absorber atomizer. Automatic (or manual) adjustment to the flow is made as a function of the output from a hydrochloric acid (HCl) analyzer in the gas duct downstream of the fabric filter. The amount of slurry metered is proportional to the amount of HCl monitored.

The slurry passes through a stationary swirl-type liquid distributor into the atomizer wheel where induced centrifugal force from the rapidly spinning wheel discharges the slurry through the wheel nozzles at high velocity. The design of the atomizer wheel, its rate of spin, and the discharge velocity of the slurry, create a cloud of finely divided droplets around the periphery of the atomizer wheel. Cooling water is also passed through the atomizer to provide additional gas cooling to the system. The water flow is not metered, but is controlled by a feedback signal from the atomizer power transmitter. This provides verification that water flow to the atomizer increases or decreases in proportion to the spray dryer absorber outlet temperature.

Flue gas enters from the bottom of the spray dryer absorber through a vertical, centrally located disperser. The disperser directs the flue gas through the zone filled by the atomized

slurry cloud where the flue gas and slurry mix and most of the absorption occurred. The gases then flow downward through the absorber chamber and exit through a bottom side duct. As the gases contact and pass through the cloud of atomized lime slurry, the water in the slurry evaporates, cooling the gases. Simultaneously, the lime in the slurry reacts with the hydrogen chloride in the gases to produce calcium salts. Some of the resulting dry material, consisting of calcium salts, fly ash and excess lime, falls to the conical bottom of the unit. The dry material from each unit is discharged to a conveyor system which transports it to a dump trailer or equivalent type system.

#### 2.5.1.3 Fabric Filter

Gas exhausted from the spray dryer absorber is distributed by manifold ducts to four fabric filter modules. The unit is operated with only three modules on-line with the fourth module off-line in a standby mode. Within each filter module, the gas is passed through Teflon-coated fiberglass cloth bags. The gas passes from the outside to the inside of the filter bags. Particulate matter entrained in the gas stream is mechanically deposited on the outside of the filter bags as the gas passes through the cloth.

Each module has a clean air plenum and housing section to contain approximately 96 bags. Each bag is approximately 6|| in diameter by 20' long. The baghouses are fabricated from 3/16|| mild steel plate, of welded construction, gas tight and stiffened to withstand the maximum operating negative pressure. Each compartment has a tube sheet that supports the bags and provides for top bag/cage removal. Access to the clean air plenum is via a side access door in the clean air plenum.

The fabric filter cleaning mechanism utilizes jets of air to clean the filter bags. Periodically, the cleaning sequence will be initiated. The sequence is started at the end of a 4-hour timed cycle, when the differential pressure across the filter reaches a predetermined setpoint of approximately 7.0|| w.c., or when the operator initiates a cycle. The controller then sequences to each row of filter bags in each module, releasing a burst of air opposite to the direction of gas flow. The quickly released burst of air dislodges dust cake on the exterior of each bag as it travels from the top to the bottom of the bags. Released from the bag, the dust cake falls by gravity into the hopper at the bottom of the module. From there it is discharged to a conveyor system which transports it to a dump trailer, or equivalent type system.

Treated by the spray dryer absorber and filtered by the fabric filters, the cleaned flue gas exits the fabric filter modules to an outlet manifold for exhaust.

#### 2.5.1.4 Induced Draft Fan and Stack

The induced draft fan and stack are located downstream of the fabric filter. Combustion gases are drawn through the system by a 75 hp induced draft (ID) fan, rated at 15,000 acfm at 400°F saturated, and 22|| water column pressure. The induced draft fan provides the mechanism for transporting the incinerator flue gas through the spray dryer absorber, fabric filter, and all interconnecting ducts. The ID fan includes an inlet volume control damper to be used to control the velocity of the gas within the ducting and treatment devices.

Treated gases are exhausted from the induced draft fan to the atmosphere through a 90-ft. high stack. The stack diameter for Unit 2 is 39 inches I.D. The stack is equipped with instrument sampling ports and a sampling platform for emissions testing. Figure 5-1 in the QAPjPprovides details on the design and sample port locations and configurations for the stack.

## 2.6 Stack Emissions Monitoring [40 CFR §63.1207(f)(1)(iii)(H)]

The continuous emissions monitoring (CEM) system consists of sample probes, sample delivery and conditioning apparatus, and gas analyzers. Samples are extracted from the sampling ports on the stack. A CEM performance test and quality assurance program has been implemented in accordance with the **Appendix to Subpart EEE of Part 63—Quality Assurance Procedures for Continuous Emissions Monitors Used for Hazardous Waste Combustors.**

Responses from each CEMS are fed to the Control System (CS) where the CO hourly rolling average is calculated and interlocked to the waste feed cutoff valves as part of the Automatic Waste Feed Cutoff System (AWFCO) discussed in Section 2.8, below. The following provides a brief description of the CEMS instruments including the operating range and measurement principal.

### 2.6.1 CEM System Description

The Continuous Emissions Monitoring Systems (CEMS) on Unit 2 analyzes for opacity, carbon monoxide, hydrogen chloride, total hydrocarbons, and oxygen. These monitors, except opacity, are extractive devices mounted in sampling ports on the stack. Table 2-2 below summarizes the analyzer specifications.

**Table 2-2. Unit 2 Continuous Emission Monitors[1]**

| Parameter | Current Mfg. | Range | Principle |
|---|---|---|---|
| Oxygen | COSA | 0-25% | Electrochemical |
| Carbon Monoxide | Ecochem MC3 | 0-200 ppmv<br>0-3000 ppmv | Infrared |
| Total Hydrocarbons | Thermoelectron | 0-100 ppmv | FID |
| Hydrogen Chloride | Ecochem MC3 | 0-1,000 ppmv | Infrared |
| Opacity | Teledyne | 0-100% | White light |
| Stack Gas Flow | PSE/Rosemount | 0-20,000 acfm | Pressure drop |

[1] Only the carbon monoxide, oxygen, and stack gas flow rate are parameters, and monitors, regulated and required by the HWC MACT. The other CEMS are required by the RCRA permit for the facility

The opacity monitor continuously measures the stack gas opacity and reports the measurements to an indicator and a recorder. An opacity that exceeds a preset limit triggers an alarm and interlock.

Carbon monoxide and hydrogen chloride are monitored with extractive non-disperse infrared analyzers. Total hydrocarbons is monitored with an extractive flame ionization detector analyzer. Oxygen is monitored with a zirconium oxide cell.

Stack gas flowrate is continuously monitored as actual cubic feet per minute (acfm) using an Annubar™.

Only the carbon monoxide,oxygen, and stack gas flowrate are parameters, and monitors, regulated and required by the HWC MACT The other CEMS are required by the RCRA permit for the facility. The carbon monoxide and oxygen CEMS have been certified according to the requirements of 40 CFR Part 60, Appendix B, Performance Specification 4B A Relative Accuracy Test Audit(RATA) of the CO and $O_2$ CEMS is conducted annually. In addition, a RATA of the CO and $O_2$ CEMS will be conducted within 60 days of the Comprehensive Performance Test to coincide with the performance test as required by Section 5 of the **Appendix to Subpart EEE of Part 63.**

## 2.7 Process Monitoring and Control

The facility is equipped with a state-of-the-art monitoring and control system, which facilitates compliance with permit conditions, and otherwise, collects process control information, facilitates efficient operation and detects and prevents damage to the facility.

The system consists of three major components:

- A human-machine interface (HMI) system;
- Programmable logic controller's (PLCs); and
- A high speed Ethernet cable connects all control system components.

The desired control functions are implemented through the HMI system. All digital control and emergency interlocks are accomplished by the PLC.

The control system is capable of monitoring the "operational envelope" of the incinerator and is capable of performing a number of activities including:

- Control room indication of processor sensors located within the incinerator system (such as pressure indication of the field installed pressure transmitter);
- Process controller for single instrument loops or an individual subsystem, such as a temperature control loop involving a sensor reading from one temperature transmitter affecting the function of one temperature control valve; and
- Alarm for an exceedance of a designated setpoint, such as a high pressure or low temperature.

The process control computer will continuously control and monitor the operation of the incinerator. When out-of-range conditions exist, it will notify the operator of those conditions. The process control computer is programmed to shut-down equipment (i.e., bring the system into a safe mode) when designated parameters are exceeded, which is a protective mechanism against potential equipment damage, operation outside of permit limits, or conditions that might lead to a release to the environment.

Continuous monitoring of the incinerator and scrubber system is an important aspect of the system design. A digital readout of all monitoring instrumentation is displayed on the main control screen. An audible and visual alarm alerts the incinerator operator to significant deviations from normal operating conditions. This system allows an immediate response to adverse conditions by the operator. Automatic waste feed cut-off and incineration shutdown mechanisms are also interlocked with the monitoring system at or prior to reaching permit limit levels. Monitoring methods and calibration frequencies required by the HWC MACT are listed in Table 2-3.

The incinerator has an independent process control computer that interfaces to the Quantum programmable controllers. The process computer is capable of controlling the incinerator in case of a failure in a HMI server. This computer runs a RSVIEW HMI control software that provides operator interface to all instrumentation and controls.

**Table 2-3. Current HWC MACT AWFCO Parameters for Unit 2**

| System | Device | Units |
|---|---|---|
| Total Pumpable Waste Feedrate[1] | Mass Flow Meters/Scales | lb/hr |
| Total Waste Feedrate[1] | Mass Flow Meters/Scales | lb/hr |
| High BTU Liquid Feedrate | Mass Flow Meter | lb/hr |
| Low BTU Liquid Feedrate | Mass Flow Meter | lb/hr |
| Direct Inject Feedrate | Vehicle Scale | lb/hr |
| Specialty Feedrate | Floor Scale | lb/hr |
| Container Feedrate | Floor Scale | lb/hr |
| Total LVM Feedrate[1] | Mass Flow Meters/Scales | lb/hr |
| Pumpable LVM Feedrate[1] | Mass Flow Meter/Scales | lb/hr |
| SVM Feedrate[1] | Mass Flow Meters/Scales | lb/hr |
| Mercury Feedrate[1] | Mass Flow Meters/Scales | lb/hr |
| Chlorine Feedrate[1] | Mass Flow Meters/Scales | lb/hr |
| Ash Feedrate[1] | Mass Flow Meters/Scales | lb/hr |
| Primary Combustion Chamber Temperature | Type K Thermocouple | °F |
| Secondary Combustion Chamber Temperature | Type K Thermocouple | °F |
| Primary Combustion Chamber Pressure | Pressure Transmitter | in. w.c. |
| Secondary Combustion Chamber Pressure | Pressure Transmitter | in. w.c. |
| Sorbent Feedrate | Flow Meter | lb/lb $Cl_2$ |
| Carrier Fluid Flowrate | Flow Meter | gal/lb $Cl_2$ |
| Baghouse Inlet Temperature (i.e.,Spray Dryer Adsorber Outlet Temperature) | Type K Thermocouple | °F |
| Stack Gas Flowrate | Pitot Tube | acfm |
| Stack Carbon Monoxide Corrected to 7% Oxygen | Infrared | ppmv |

[1] Feedrate is tabulated within the DAS using measured individual stream feedrates. Total pumpable hazardous waste and total hazardous waste feedrates are summations of the applicable individual waste feedrates. Total LVM, pumpable LVM, SVM, mercury, chlorine, and ash feedrates are calculated based on the stream feedrates and analytical results of the applicable waste streams.

[2] HRA – Hourly Rolling Average

[3] 12-HRA – 12-Hour Rolling Average

## 2.8 Automatic Waste Feed Cut-off System [40 CFR §63.1207(f)(1)(iii)(F)]

The incinerator has an Automatic Waste Feed Cut-Off (AWFCO) System that will shut waste feeds off in the event certain operating parameters deviate from allowable set points. The PLC continuously monitors operating parameters, making adjustments to the process as needed for proper control. Alarm logic is incorporated into the PLC system to automatically initiate an AWFCO. Table 2-3 summarizes the current HWC MACT AWFCO set points. AWFCO limits have been established based on several factors that are summarized below:

- Regulatory Limits – Established to comply with current limits in the NOC An example of this type of limit is the low temperature limit, below which waste cannot be fed until the proper limit is established.

  In addition, the HWC MACT regulations require that the AWFCO system be interlocked with the span of each process instrument that is part of the Continuous Monitoring System (CMS). A listing of these CMS instruments and their interlocked span setpoints is maintained as part of Veolia's Operating Record.

- Process Safety Limits – Established to assure process equipment is protected and unsafe operating conditions do not occur An example of this is inadequate excess air in the combustion chamber that can lead to fuel rich conditions.

- Utility or Power Failure – Established to facilitate a controlled shutdown of the process during loss of process air, steam, water or electricityAn example of this is the loss of instrument air that is necessary for certain types of process instruments to function properly. Wastes will not be reintroduced into the incinerator until proper operation of key instruments is re-established

In addition to the AWFCO system, operators can manually shutdown waste feeds or the entire process should this be needed.

### 2.8.1 AWFCO System Testing

§63.1206(c)(3)(vii)states—The AWFCO system and associated alarms must betested at least weekly to verify operability, unless you document in the operating record that weekly inspections will unduly restrict or upset operations and that less frequent inspections will be adequate. At a minimum, you must conduct operability testing at least monthly.|| Veolia tests the AWFCO systems bi-weekly, as weekly testing would unduly restrict and upset operations. Waste feeds are ceased when AWFCO operability testing is performed and restarted upon completion of the testing. By ceasing and restarting waste feeds, increased emissions, such as elevated CO concentrations in the stack gas, can occur due to the unsteady state of the operation during these periods Besides incurring downtime during these testing periods, increasedcosts are experienced due to much highenatural gas consumption during this idling period to maintain the hourly average combustion zone temperatures By performing the AWFCO testing on a bi-weekly basis, decreased emissions can be achieved and a reduction in fossilfusage realized.

The current testing program has been in place under the RCRA permit for over 20 years and has proven to be adequate in detecting problems. This rationale is included in the facility's AWFCO Plan. In some cases this testing occurs more frequently depending on how often actual AWFCOs occur at the unit. When these AWFCOs occur, verification of the system operability is confirmed by the actuation of closed limited switches on the waste feed shutoff valves. Per the required frequency, incinerator personnel check the functionality of AWFCO logic that is part of the incinerator's PLC system to make sure that should process conditions deviate from

allowable limits, the computer logic will initiate waste feed shutdowns as required.

This is accomplished by manually simulating process conditions that are outside allowable limits and observing and documenting when the control or block valve software logic on the waste feed line begins to initiate valve closure. Should actual AWFCOs occur during a given testing period, these are documented by operating personnel to satisfy regulatory requirements for system testing. Results of this testing are documented on a separate AWFCO Testing Log and maintained as part of the unit's Operating Record.

## 2.9 Air Pollution Control Equipment Maintenance Practices [40 CFR §63.1207(f)(1)(iii)(G)]

### 2.9.1 Program Overview

Veolia utilizes an extensive preventative maintenance (PM) program to keep equipment operational and prevent breakdowns and failures. Based upon the type of equipment and historical operations and maintenance experience, schedules for various inspection and PM activities are followed. This includes aspects such as documenting detailed maintenance histories on equipment, routine inspection and lubrication programs for high wear equipment and non-destructive testing of piping and vessels using techniques like ultrasound to assess integrity. The frequency of these activities varies depending upon the equipment, PM activity and the incinerator's shutdown schedule.

For example, frequent (i.e., weekly) instrument and certain mechanical equipment checks are made for critical process items. Lubrication, vibration analysis and other mechanical integrity checks are done at longer frequencies like monthly or quarterly. Such items as inspecting refractory brick for wear are typically performed when the entire incinerator is shut down for maintenance.

### 2.9.2 Test Program Preparation Activities

In accordance with the Continuous Monitoring System Performance Evaluation Test Plan (CMS PETP) in Appendix A, prior to testing, instrumentation associated with key parameters of the test will be checked, calibrated, or replaced, as appropriate, to ensure proper operation of the instrumentation during testing (i.e., waste feed flow meters and scales, CEMs, pressure transmitters, thermocouples, stack flow meters, etc.).

# 3.0 Incinerator Feed Stream Descriptions

## 3.1 General

Veolia treats a broad range of wastes and thus the individual streams that may make up the incinerator overall feed at any given time can vary greatly, depending on generator production and shipping schedules. Prior to scheduling wastes for shipment to the facility, the waste streams are characterized by the generator and reviewed by Veolia staff. A Waste Profile Number uniquely identifies each different waste stream. This assures that only pre-approved wastes are handled at the facility and that all necessary regulatory, handling, safety and other important information are available to Operations personnel. Organic Hazardous Air Pollutants (HAPs) measured or expected (based on process knowledge) to be present in a source waste at or above approximately 0.1 % by weight are listed in the tables in this section. Organic HAPS not listed are, based on process knowledge, believed to be either completely absent or present in the waste at less than 0.1 % by weight.

In addition to the information below that summarizes the top volume waste streams processed at Veolia, Table 3-1 provides a summary of the major HAPs processed at the facility. Veolia will provide EPA with waste profiles and chemical compositions of the anticipated wastes to be burned during the CPTs about one month prior to testing. Veolia will provide EPA with analytical results performed on any liquid or solid waste stream to be used during the CPT by August 16, 2013. Note that waste streams may be added or removed from this packet by test time. Veolia will notify EPA of any changes made to wastes to be burned during the CPT prior to the test. Veolia will provide those new profiles to EPA prior to the test. The test report will include the waste profiles fed during the testing with the analytical results for the samples obtained during tests for heating value, ash, SVM, LVM, mercury, and total chlorine.

**Table 3-1. Summary of Major HAPs Processed**

| HAP | CAS Number | Annual Pounds Received |
|---|---|---|
| Toluene | 108-88-3 | 1,413,638 |
| Styrene | 100-42-5 | 816,986 |
| Methanol | 67-56-1 | 779,318 |
| Acetonitrile | 75-05-8 | 766,568 |
| o-Xylene | 95-47-6 | 506,286 |
| Ethylbenzene | 100-41-4 | 438,753 |
| Atrazine | 1912-24-9 | 356,148 |
| Methyl Isobutyl Ketone | 108-10-1 | 347,681 |
| Triethylamine | 121-44-8 | 212,270 |
| Pyridine | 110-86-1 | 115,835 |

## 3.2 High Volume Wastes

### 3.2.1 Liquid Wastes

Liquid wastes are received at the Sauget facility in tank trucks and drums and are either direct fed through a dedicated line or are blended with other compatible waste streams into the tank farm. Table 3-2 provides a summary of the top volume liquid streams that have been processed in the last year. Liquid wastes can be processed in any one of the three incinerators. These streams can be organic, aqueous or a mixture.

### 3.2.2 Bulk Solids

Table 3-3 provides a summary of the top bulk solid streams handled at the Sauget facility in the last year. Bulk solids can include streams like contaminated soils, wastewater sludges or manufacturing process solids. These wastes are received at the site primarily in 20 to 40 cubic yard roll-off containers or other similar bulk transport vehicles.

### 3.2.3 Containerized Waste

Table 3-4 provides a summary of the top containerized waste streams handled at Sauget in the last year. Containerized wastes are received in drums and smaller cartons, boxes or pails and can include materials such as laboratory waste, spent carbon, process residues.

### 3.2.4 Gaseous Wastes

Small volumes of compressed gases are processed in Unit 2 however these are minimal in comparison to the other waste types that are treated.

## 3.3 Auxiliary Fuels

Natural gas is used as auxiliary fuel to start-up and obtain desired temperatures in the incinerators. At this time, all incinerators use natural gas as their primary fossil fuel. Typical composition of the natural gas is provided in Table 3-5.

**Table 3-2. Top Volume Liquid Waste Streams**

| Profile | Waste Name | Annual Pounds Received |
|---|---|---|
| 397628 | DE175 - IPA Wash & Filtrate Wash | 4,649,673 |
| 388522 | Mother Liquor Residue | 2,246,160 |
| 076148 | Formulation Aqueous With or Without Sevin | 2,096,319 |
| 388955 | 1.51B Waste Organics/MKH Sencor FOE/GAU | 1,723,519 |
| 388521 | Upper Phase (May have cyanide) | 1,530,146 |
| 697847 | 1.5B3/B4 Aqueous Waste (Sencor/FOE) | 1,405,346 |
| 351071 | Bulked Liquid for Incin (CWDTWILIQ) | 1,345,870 |
| 131663 | MDU-SIB Recycle Oil | 1,299,755 |
| 857617 | Amine and Water Mixture | 1,216,946 |
| 097250 | Tank Rinsate Aqueous Non-Haz | 915,950 |

**Table 3-3. Top Bulk Solid Waste Streams**

| Profile | Waste Name | Annual Pounds Received |
|---|---|---|
| 156453 | Unused Medication | 151,439 |
| 393836 | Hazardous Contaminated Soil | 80,768 |
| 410031 | Bulked Liq for Incin (CWDTWILIQ) | 43,099 |
| 175684 | Soil Contaminated with Xylene | 38,318 |
| 251059 | Metal Equipment for Cleanout | 29,322 |
| 360856 | Sludge -AG Chemical Hazardous | 24,740 |
| 208526 | Bromoxynil Octanoate; Atrazine | 19,992 |
| 272684 | Exchanger Pad Debris | 13,328 |
| 076872 | Demilitarized BDU-PPE | 13,328 |
| 197763 | Serfene 121 Solids | 12,495 |

## Table 3-4. Top Containerized Solid Waste Streams

| Profile | Waste Name | Annual Pounds Received |
|---|---|---|
| SOL003 | Solid Neutral BTU > 5000, Halogen <25% | 1,285,211 |
| LOP001 | Flammable Loose Pack | 821,421 |
| 597419 | Toxic Solids | 724,418 |
| 076154 | Lab Waste (COM) | 679,895 |
| BB1445 | PLC-Direct Charge | 658,253 |
| LOP003 | Non Reg Material - Loose Pack | 534,886 |
| 387332 | Residues (Plastic Bags PPEET) | 479,225 |
| 502988 | Centrum Vitamin Tablet Production Waste | 372,184 |
| 534022 | Centrum Multi-Vitamin | 357,357 |
| LIQ003 | Liquid BTU 5000-10000 Halogen, 10% | 346,820 |

## Table 3-5. Typical Properties for Natural Gas

| Component | Units | Value | Component | Units | Value |
|---|---|---|---|---|---|
| Methane | mole % | 94.428 | Heptanes | mole % | 0.019 |
| Ethane | mole % | 3.081 | Octanes | mole % | 0.005 |
| Propane | mole % | 0.582 | Nitrogen | mole % | 0.703 |
| Isobutane | mole % | 0.087 | Carbon Dioxide | mole % | 0.824 |
| N-butane | mole % | 0.129 | Helium | mole % | 0.014 |
| Isopentane | mole % | 0.040 | Hydrogen | mole % | 0.023 |
| N-pentane | mole % | 0.032 | Argon | mole % | 0.0 |
| Hexanes | mole % | 0.029 | Oxygen | mole % | 0.004 |
| **Parameter** | **Units** | **Value** | **Parameter** | **Units** | **Value** |
| Heat Content, gross, dry | Btu/CF | 1040.5 | Relative Density | - | 0.592 |
| Heat Content, gross, sat. | Btu/CF | 1023.6 | Wobbe Index | - | 1330 |

# 4.0 Performance Test Protocol

## 4.1 General Description

This CPT Plan has been designed to demonstrate compliance withall of the applicable standardsof the HWCMACT and to establish Operating Parameter Limits (OPLs) while demonstrating compliance with applicable, and targeted, HWC MACT emissions standards.

During the testing, Veolia will be seeking to establish new OPLs for Unit 2. Due to this, Veolia will adjust the limits at which the AWFCO system activates, except for carbon monoxide. At the end of each day of testing, current AWFCO limits will be reinstated back to currently established limits.

## 4.2 Performance Standards

This test plan for Unit 2 at Saugethas been designed to demonstrate compliance with the performance standards of the HWC MACT forall of the applicable emission standards including

- Carbon Monoxide: 100 ppmv, dry, corrected to 7% $O_2$;
- Total Hydrocarbons: 10 ppmv, dry, corrected to 7% $O_2$;
- Dioxins/Furans: 0.20 ng TEQ/dscm, corrected to 7% $O_2$;
- Particulate Matter (PM): 0.013 grains/dscf, corrected to 7% $O_2$;
- Mercury: 130 μg/dscm, corrected to 7% $O_2$;
- Semivolatile Metals (SVM) (Cd and Pb combined): 230 μg /dscm, corrected to 7% $O_2$;
- Low Volatility Metals (LVM) (As, Be and Cr combined): 92 μg /dscm, corrected to 7% $O_2$; and
- Hydrogen Chloride/Chlorine ($HCl/Cl_2$): 32 ppmv as $Cl^-$ equivalent, dry, corrected to 7% $O_2$.

A performance evaluation test of the Continuous Monitoring System (CMS) will be performed in association with the CPT (see Appendix A). A Relative Accuracy Test Audit (RATA) for the CO and $O_2$ Continuous Emissions Monitoring Systems (CEMS) will be performed to coincide with the CPT (i.e., within 60 days of the CPT).

## 4.3 Test Condition [40 CFR § 63.1207(f)(1)(vi) and (vii)]

The testing is designed to demonstrate compliance with targeted HWC MACT emissions standards while establishing OPLs required in association with the targeted standard, or standards. There will be one test condition, and one set of OPLs will be established. In the first part of each ~~the~~ test run, compliance will be demonstrated with the emission standards for PM and $HCl/Cl_2$, and the OPLs required in association with these emission standards will be developed. In the second part of each ~~the~~ test run, compliance will be demonstrated with the emission standards for dioxins and furans, LVM, SVM, mercury, and THC, and the OPLs required in association with these emission standards will be developed. $HCl/Cl_2$ will also be measured in the second part of each run. There will be three test runs performed at the one test condition. Section 4.11 and Table 4-5 present an anticipated daily schedule for the conduct of the subsequent CPT.

### 4.3.1 Maximum Feedrate of Ash and Chlorine, Minimum Sorbent and Carrier Fluid Flowrates to the SDA

This part of the CPT is designed to demonstrate compliance with the emission limits and to establish OPLs for the Final Replacement Standards of the HWC MACT for PM and $HCl/Cl_2$.

Unit 2 will be operated at normal combustion zone temperatures with normal waste feed rates. The flue gas flowrate and the chlorine and ash feedrates will be maximized. The target waste and component feedrates and operating conditions for this portion of the CPT are summarized in Table 4-1 and the proposed operating limits are summarized in Table 4-2. OPLs for the following will be established in this part of the test:

- Maximum Feedrate of Ash;
- Maximum Feedrate of Chlorine;
- Maximum Stack Gas Flowrate;
- Minimum Sorbent Flowrate to the SDA; and
- Minimum Carrier Fluid Flowrate to the SDA.

Table 4-1 presents the waste feeds and spiked feed materials that are planned to be fed during the testing along with anticipated feedrates for each. In the event that selected waste feed materials contain an appreciable quantity of ash and chlorine, the ash or chlorine spiking rates may be adjusted to achieve the overall desired feedrate.

Sampling for this portion of the test includes:

- Stack – PM;
- Stack – $HCl/Cl_2$;
- Stack – CO, $O_2$;
- Chlorine Spiking Material; and
- Waste Feeds – Ash, Chlorine, Moisture, Heating Value, and Density and Viscosity (Liquids).

The OPLs associated with the emission standards for PM and $HCl/Cl_2$ will be developed from this portion of the test using process data collected during the collection of the Method 5/26A sampling train.

### 4.3.2 Maximum Feedrate of Metals and Chlorine, Maximum Waste Feedrates

This part of the test is designed to demonstrate compliance with the emission limits and to establish OPLs for the Final Replacement Standards of the HWC MACT for LVM, SVM, mercury, dioxins and furans, and THC.

Unit 2 will be operated at maximum hazardous waste feedrates and normal combustion zone temperatures. Although Veolia will be establishing a minimum PCC temperature during this part of the test, the incinerator will be operated at normal temperatures, which will be higher than the current minimum PCC temperature OPLs, and will use the average temperature of the runs to establish the new PCC temperature OPLs. The feedrates of SVM, LVM, and Hg will be maximized, and the flue gas flowrate and chlorine feedrate will be maximized. The baghouse inlet temperature will be maximized. The feedrate of ash will be at normal (or higher) levels. The target feedrates and operating conditions for this portion of the CPT are summarized in Table 4-1 and the proposed operating limits are summarized in Table 4-2. OPLs for the following will be established in this part of the test:

- Maximum Pumpable Hazardous Waste Feedrate;
- Maximum Total Hazardous Waste Feedrate;
- Minimum PCC Temperature;
- Minimum SCC Temperature;
- Maximum Stack Gas Flowrate;
- Maximum Feedrate of Pumpable LVM;
- Maximum Feedrate of Total LVM;
- Maximum Feedrate of SVM;
- Maximum Feedrate of Mercury;
- Maximum Feedrate of Chlorine; and
- Maximum Baghouse Inlet Temperature.

**Table 4-1. Target Feedrates and Operating Conditions**

| Parameter | Units | Expected Feedrate or Operating Condition to be Demonstrated During the CPT |
|---|---|---|
| Pumpable Waste Feed | lb/hr | 3,150 - 4,000 |
| Solids Waste Feed | lb/hr | 600 – 1,100 |
| Total Waste Feed | lb/hr | 3,750 – 5,000 |
| Stack Gas Flowrate | Acfm | 14,500 – 17,000 |
| Temperature in the Primary Combustion Chamber | °F | 1,650 – 1,750 |
| Temperature in the Secondary Combustion Chamber | °F | 1,800 – 1,900 |
| Lead Spike[1] | lb/hr | 60 - 65 |
| SemiVolatile Metals Feedrate | lb/hr | 60 -65 |
| Chromium Spike[1] | lb/hr | 40 - 45 |
| Pumpable Low Volatility Metals Feedrate | lb/hr | 40 - 45 |
| Total Low Volatility Metals Feedrate | lb/hr | 40 - 45 |
| Mercury Spike[1] | lb/hr | 0.001 – 0.003 |
| Mercury Feedrate | lb/hr | 0.001 – 0.003 |
| Chlorine Spike[1] | lb/hr | 200 - 250 |
| Chlorine Feedrate | lb/hr | 200 - 250 |
| Ash Feedrate | lb/hr | 500 - 700 |
| Fabric Filter Inlet Temperature | °F | 390 - 425 |
| Sorbent Feedrate | lb/lb $Cl_2$ | 1.25 – 2.0 |
| Carrier Fluid Flowrate | gal/lb $Cl_2$ | 1.4 – 2.0 |

[1] Rates may be modified based on concentrations in the native waste fed during the CPT.

## Table 4-2. HWC MACT OPLS to be Established During the Comprehensive Performance Test

| Process Parameter | Units | Averaging Period | How Limit Established | Expected Limit |
|---|---|---|---|---|
| Maximum Pumpable Waste Feed [1] | lb/hr | 1-hr | Average of maximum HRAs for each run | 3,150 – 4,000 |
| Maximum Total Waste Feed [1] | lb/hr | 1-hr | Average of maximum HRAs for each run | 3,750 – 5,000 |
| Maximum Flue Gas Flowrate [1] | Acfm | 1-hr | Average of maximum HRAs for each run | 14,500 – 17,000 |
| Minimum Temperature in the Primary Combustion Chamber [1] | °F | 1-hr | Average of the test run averages | 1,650 – 1,750 |
| Minimum Temperature in the Secondary Combustion Chamber [1] | °F | 1-hr | Average of the test run averages | 1,800 – 1,900 |
| Maximum Total Low Volatility Metals (LVM) Feedrate | lb/hr | 12-hr | Average of the average HRAs for each run | 40 – 45 |
| Maximum Pumpable LVM Feedrate | lb/hr | 12-hr | Average of the average HRAs for each run | 40 – 45 |
| Maximum Semivolatile Metals (SVM) Feedrate | lb/hr | 12-hr | Average of the average HRAs for each run | 60 – 65 |
| Maximum Total Mercury Feedrate | lb/hr | 12-hr | Average of the test run averages | 0.001 – 0.003 |
| Maximum Chlorine/Chloride Feedrate [2] | lb/hr | 12-hr | Average of the test run averages | 200 – 250 |
| Maximum Ash Feedrate | lb/hr | 12-hr | Average of the average HRAs for each run | 500 - 700 |
| Maximum Fabric Filter Inlet Temperature | °F | 1-hr | Average of the test run averages | 390 – 425 |
| Minimum Sorbent Feedrate | lb/lb $Cl_2$ | 1-hr | Average of the test run averages | 1.25 – 2.0 |
| Minimum Carrier Fluid Flowrate | gal/lb $Cl_2$ | 1-hr | Average of the test run averages | 1.4 – 2.0 |

[1] Per 40 CFR 63.1209(i), the most stringent limit derived from independent performance tests (i.e., Data in lieu from the January 1993 RCRA Trial Burn and the subsequent CPT applies.

[2] Per 40 CFR 63.1209(i), the most stringent limit derived from independent performance tests (i.e., the two portions of the subsequent CPT) applies.

Table 4-1 presents the waste feeds and spiked feed materials that are planned to be fed during the testing along with anticipated feed rates for each. In the event that selected waste feed materials contain an appreciable quantity of chlorine, LVM, SVM, or mercury, the metals or chlorine spiking rates may be adjusted to achieve the overall desired feed rate.

Sampling for this portion of the test includes:

- Stack – Dioxins/Furans
- Stack – LVM, SVM, and Hg
- Stack – CO, $O_2$
- Stack – THC
- Stack – HCl/$Cl_2$
- Cr, Pb, Hg, and Chlorine Spiking Materials
- Waste Feeds – Metals (LVM – As, Be, Cr; SVM – Pb, Cd; Hg), Ash, Chlorine, Moisture, Heating Value, and Density and Viscosity (Liquids)

Operation of Unit 2 will remain consistent throughout the collection of the Method 29 and Method 0023A sampling trains. The OPLs associated with the emission standards for LVM, SVM, Hg, dioxins/furans, and THC will be developed using process data gathered during the collection of the Method 29 and Method 0023A sampling trains. The second part of the test is expected to be completed with the completion of sampling of the Method 0023A sampling train. The Method 0023A sampling train is the longer running sampling train, and should be the last one completed.

## 4.4 Establishing Operating Parameter Limits

An objective of the subsequent CPT for the Final Replacement Standards is to establish limits for a number of operating parameters while simultaneously demonstrating compliance with the performance standards and emission limits of the HWC MACT. Operating parameter limits established as required by the HWC MACT from the results of the CPT will limit emissions of the regulated parameters, and will ensure compliance with these standards during future operations. Table 4-3 identifies each emission standard and the operating parameter to be monitored to ensure future compliance. The HWC MACT requires operating parameters be established. The operating limit is set as the average of the three runs during the applicable portion of the CPT and the 1993 RCRA Trial Burn, as appropriate, per manufacturer specification, or by rule.

**Table 4-3. Emission Standards versus Operating Parameters**

| Emission Standard | Operating Parameter |
|---|---|
| Carbon Monoxide | Stack CO CEMS concentration |
| Dioxins/Furans | PCC temperature<br>SCC temperature<br>Flue gas flowrate<br>Total waste feedrate<br>Pumpable waste feedrate<br>Baghouse Inlet Temperature |
| DRE | PCC temperature<br>SCC temperature<br>Flue gas flowrate<br>Total waste feedrate<br>Pumpable waste feedrate |
| Total Hydrocarbons (THC) | PCC temperature<br>SCC temperature<br>Flue gas flowrate<br>Total waste feedrate<br>Pumpable waste feedrate |
| Mercury | Mercury feedrate |
| Particulate Matter | Flue gas flowrate<br>Ash feedrate |
| Semivolatile Metals<br>Low Volatility Metals | Flue gas flowrate<br>SVM feedrate<br>LVM feedrate (total and pumpable)<br>Total chlorine and chloride feedrate<br>Baghouse Inlet Temperature |
| $HCl/Cl_2$ | Flue gas flowrate<br>Total chlorine and chloride feedrate<br>Sorbent feedrate<br>Carrier Fluid Flowrate |

The following operating conditions will be established for the HWC MACT:

### Limits on the Combustion Units

The **carbon monoxide (CO) concentration** is established by rule. The HRA limit is 100 ppmv, dry basis, corrected to 7% oxygen, and will be demonstrated during all testing performed.

The **total hydrocarbon (THC) concentration** is established by rule. The limit for THC of 10 ppmv, dry basis, corrected to 7% oxygen will be demonstrated during the dioxins/furans portion of the CPT.

Minimum **combustion chamber temperatures** in the primary combustion chamber (PCC) and in the secondary combustion chamber (SCC) will be established during the CPT. The hourly rolling average (HRA) limits are the average of the test run averages from the dioxins/furans tests or the limits set during the 1993 RCRA Trial Burn, whichever is more stringent since DRE is being demonstrated using test results from the 1993 trial burn.

Fugitive emissions are controlled by maintaining a negative pressure on the combustion system and by maintaining totally sealed combustion chambers. The pressure of both the PCC and SCC are monitored.

The maximum **flue gas flowrate**, measured as the stack gas flowrate, will be established during the CPT. Flue gas flowrate is an OPL required by standards to be demonstrated during all testing performed. The HRA limit is the average of the maximum hourly rolling averages for each run, and will be established from data from all tests conducted during the CPT or based on the 1993 RCRA Trial Burn, whichever is most stringent since DRE is being demonstrated using test results from the 1993 trial burn.

### Limits on the Feedstreams

The maximum **total hazardous waste feedrate** to the incinerator (both the PCC and SCC) will be established during the dioxins/furans portion of the CPT. The HRA limit is the average of the maximum hourly rolling averages for each run or the limit set during the 1993 RCRA Trial Burn, whichever is more stringent since DRE is being demonstrated using test results from the 1993 trial burn.

The maximum **pumpable hazardous waste feedrate** will be established during the dioxins/furans portion of the CPT. The HRA limit is the average of the maximum hourly rolling averages for each run during or the limit set during the 1993 RCRA Trial Burn, whichever is more stringent since DRE is being demonstrated using test results from the 1993 trial burn.

The maximum **feedrate of mercury** will be established during the metals portion of the CPT. The 12-hour rolling average limit is the average of the test run averages. The limit demonstrated during the CPT can be extended by extrapolating the measured total feedrate of mercury and the measured emission concentration of mercury up to 75% of the HWC MACT standard of 130 μg/dscm or three times the spiked feedrate during the testing.

The maximum **feedrate of semivolatile metals (SVM)** (Pb and Cd combined) will be established during the metals portion of the CPT. The 12-hour rolling average limit is the average of the test run averages with the demonstration of maximum feedrate of SVM along with demonstration of higher maximum flue gas flue rate and other associated operating parameter limits. Feedrates for SVM and LVM will be established concurrently. The feedrate of total chlorine/chloride will be maximized as SVM and LVM are demonstrated. A feedrate of total chlorine/chloride will be developed in conjunction with the feedrates of SVM and LVM as an OPL for SVM. The feedrate limit for SVM can be extended by extrapolating the measured total feedrate of SVM and the measured emission concentration of SVM up to 75% of the HWC MACT standard of 230 μg/dscm or 3 times the spiked feed rate during the testing.

The maximum **feedrate of low volatility metals (LVM)** (As, Be, and Cr combined) will be established during the metals portion of the CPT. Feedrate limits will be established for feedrate of LVM in all feedstreams (i.e., total in nonpumpable and pumpable streams) and for feedrate in all pumpable feedstreams. The 12-hour rolling average limits are the averages of the test run averages with the demonstration of maximum feedrate of LVM along with demonstration of higher maximum flue gas flow rate and other associated operating parameter limits. Feedrates for SVM and LVM will be established concurrently. The feedrate of total chlorine/chloride will be maximized as SVM and LVM are demonstrated. A feedrate of total chlorine/chloride will be developed in conjunction with the feedrates of SVM and LVM as an OPL for LVM. The feedrate limit for LVM can be extended by extrapolating measured total feedrate of LVM and the measured emission concentration of LVM up to 75% of the HWC MACT standard of 92 μg/dscm or 3 times the spiked feed rate during the testing.

A maximum **feedrate of total chlorine and chloride** is established during the CPT in association with the establishment of feedrate limits for SVM and LVM, and with demonstration of the emission limit for $HCl/Cl_2$. The 12-hour rolling average limit is the average of the test run averages during the metals portion or the $HCl/Cl_2$ portion of the CPT, whichever is more stringent.

A maximum **feedrate of ash** is established during the PM portion of the CPT with demonstration of the emission limit for PM. The 12-hour rolling average limit is the average of the test run averages during the PM portion of the CPT.

### Limits on the Spray Dryer Absorber and Baghouse

The HWC MACT requires that operating parameter limits be established in association with standards for identified parameters. The air pollution control system of Unit 2 includes a spray dryer absorber and baghouse. The spray dryer absorber is designed and operated for control of acid gases. The regulated constituents of the HWC MACT for the spray dryer absorbers are $HCl/Cl_2$. The baghouse is designed and operated for control of entrained solids. The regulated constituents of the HWC MACT for the baghouse are PM, SVM, LVM, and dioxins/furans. Operating parameter limits will be established for components of the air pollution control system in association with the regulated parameters.

A maximum **inlet temperature to dry particulate matter control device (i.e., the baghouse)** is required in association with the standards for SVM and LVM, and dioxins/furans, and will be established during the CPT in association with the establishment of feedrate limits for SVM and LVM, and with demonstration of the emission limit for dioxins/furans. The HRA limit is the average of the test run averages during the SVM and LVM portion or the dioxins/furans portion of the CPT, whichever is more stringent.

The minimum **sorbent feedrate to the absorbers** is required in association with the standard for $HCl/Cl_2$, and will be established during the $HCl/Cl_2$ portion of the CPT. The HRA limit is the average of the test run averages.

The minimum **carrier fluid flowrate to the absorbers** is required in association with the standard for $HCl/Cl_2$, and will be established during the $HCl/Cl_2$ portion of the CPT. The HRA limit is the average of the test run averages.

## 4.5 Waste Feed Spiking

In order to demonstrate the required performance criteria for this program, it will be necessary to spike the incinerator feeds with select organic and inorganic constituents. The spiking levels and approach proposed for the CPT have been used successfully in the past for testing at not only Veolia, but for testing at other hazardous waste combustion facilities as well.

Each spiked material will be prepared to a known specification and confirmed by a certificate of analysis. These materials will be prepared and fed in a manner that assures a very consistent feedrate. Feedrates of each spiked compound are to be well above expected levels in native wastes such that the spiked constituent is expected to be the dominant feed of the selected parameter. Waste feeds will be sampled during the test and analyzed. The amounts of the selected parameters in the waste streams will contribute to the OPL for the waste feed rate of that constituent. Spiking rates are also selected based on historical performance to assure that emissions can be detected and actual results, versus non-detect results, are used in the calculation of system removal efficiencies (SREs).

A Standard Operating Procedure (SOP) for the preparation of the spiking materials by Veolia is included in the QAPjP. Veolia will prepare the spiking materials in accordance with the referenced QAPjP for purposes of this CPT Plan.

A more detailed description of the spike preparation procedure will be made available for EPA when the spike materials are prepared. This updated document will include, among other things, the certificates of analysis for the spike material, the scale and balance certifications, mass and concentrations of spike materials, and amount of nitric acid added to the mercury spike solution. The final version of this document will be included in the test report. It will also include, among other things, the lab preparation log sheets, spike preparation log sheets, and the incineration charge sheets.

### 4.5.1 Inorganic Constituents

Several metals will be spiked to the system to establish OPLs for the select constituents and calculate SREs. Regulated metals may be fed at some level in the native waste materials to be used during the test. However, these native concentrations may not be high enough to achieve the desired feed rate limits to be set for the system. Therefore, during the metals portion of the CPT, Veolia plans to spike three surrogate metals at higher than normal rates to ensure that sufficient metals are fed to achieve measurable emissions in the stack emissions.

Table 4-4 provides an overall summary of information relevant to the metals emissions testing. This table shows that at conservative method detection limits for the stack sampling method that will be used to measure metals in the stack gas (i.e., EPA Method 29) and the spiking rates of these metals, a SRE can be calculated greater than SRE measured in previous test programs of Unit 2. These calculations show that the metals spiking rates will result in measurable concentrations in the stack gas and emission rates. This table is only used as a predictive tool, and OPLs will be developed using actual results of the CPT. Two other points are worth noting with regard to Table 4-4:

- The spiked amount for a given metal will be the difference between the desired feed rate limit and the native quantity expected to be fed during the test; and
- Surrogate metals will represent the whole group (in the case of LVM and SVM) and test results for the spiked of these two metals categories will be used to extrapolate to the OPL for the metal feed rate.

The three metals to be spiked are representative of the three classes of metal volatility of the HWC MACT, and therefore can be used to set limits for the HWC MACT metals not spiked.

### 4.5.2 Spiking for the LVM Category

The LVM category for incinerators includes arsenic, beryllium and chromium. Veolia plans to spike chromium at 40 - 45 lb/hr during all three metals test runs. The SRE demonstrated during the CPT for chromium will be used to establish the feedrate limits for total and pumpable LVM, using extrapolation (see Section 4.6)

Chromium will be spiked as chromic acid (unless another compound of chromium is used, based on availability, and approved by USEPA Region 5) through a liquid feed injector via a pumping station that will monitor the feedrate. Waste chromic acid is treated at Veolia and thus, spiking chromic acid during the CPT is representative of normal operations.

### 4.5.3 Spiking for the SVM Category

The SVM category for incinerators includes cadmium and lead. Veolia plans to spike lead at 60 - 65 lb/hr during the CPT to establish a SRE for all three metals testruns. The SRE demonstrated during the CPT for lead will be used to establish a SVM feed rate limit, using extrapolation (see Section 4.6)

Lead will be spiked as lead nitrate (unless another compound of lead is used, based on availability, and approved by USEPA Region 5) and fed to the incinerator in small, pre-measured plastic baggies at regular intervals along with other solid waste feeds during the performance test. Lead containing wastes that are normally treated at Veolia are predominantly bulk or containerized solids and thus, this spiking approach during the CPT is representative of normal operations.

**Table 4-4. Metals Evaluation Plan**

| | Lead | Chromium | Mercury |
|---|---|---|---|
| Detection Limit (µg) | 0.45 (0.2+0.25)[1] | 0.50 (0.25+0.25)[1] | 1.79 (0.14+0.87+0.085+0.47+0.22)[2] |
| Sample Volume Collected (dscf) | 45 | 45 | 45 |
| Stack Detection Limit (µg/m$^3$) | 0.35 | 0.39 | 1.40 |
| Stack Flowrate (acfm / dscfm at 12% $O_2$) | 15,147 / 5,733 | 15,147 / 5,733 | 15,147 / 5,733 |
| Emission Rate at Detection Limit (lb/hr) | $7.6 \times 10^{-6}$ | $8.5 \times 10^{-6}$ | $3.0 \times 10^{-5}$ |
| Target Spiking Rate (lb/hr) | 60 – 65 | 40 – 45 | 0.001 – 0.003 |
| SRE at Detection Limit (%) [3] | 99.999238 | 99.999151 | 99.996952 |
| Historical SRE (%) [4] | 99.999519 | 99.999808 | 55.77 |
| Stack Gas Concentration at Expected SRE and Mid-Range of Target Spiking Rate (µg/m$^3$ at 7% $O_2$) | 21 | 5.8 | 63 |

[1] Detection Limit in Probe and Nozzle Rinse + Acidic Peroxide Impingers of EPA Method 29.

[2] Detection Limit in Probe and Nozzle Rinse + Acidic Peroxide Impingers + Empty Impinger + Acidic Permanganate Impinger + HCl Rinse of EPA Method 29.

[3] Based on the low end target spiking rate .

[4] This SRE is an average of the results from the August/September 2008 test programs.

### 4.5.4 Spiking for Mercury

Mercury is the only high volatility metal of the HWC MACT. Veolia plans to spike mercury at approximately 0.001 – 0.003 lb/hr during all three metals test runs. The SRE demonstrated during the CPT for mercury will be used to establish a mercury feedrate limit, using extrapolation (see Section 4.6).

Mercury will be fed as a mercuric nitrate solution (unless another compound of mercury is used, based on availability, and approved by USEPA Region 5) contained in vials fed with solids to the incinerator, and will be fed placing a vial in solids fed to the incinerator at regular intervals during the performance test. Mercury is predominantly present in solid feeds processed at Veolia and using a liquid solution for spiking will provide an easily volatilized form fed along with other solid feeds in a manner that is representative of normal operations.

### 4.5.5 Spiking for Chlorine Loading

Pursuant to 40 CFR §63.1209(n)(4) and 40 CFR §63.1209(o)(1), Veolia will be establishing a maximum total chlorine and chloride feedrate during the CPT. The maximum chlorine feedrate is an OPL to be established in association with the HWC MACT standards for LVM and SVM, and HCl/$Cl_2$. In addition to the chlorine being fed to the incinerator from the

native wastes, chlorine feed to the incinerator will be supplemented during the $HCl/Cl_2$ portion and the SVM and LVM portion of the CPT by the spiking of hexachloroethane and/or PVC (unless another chlorinated compound is used, based on availability, and approved by USEPA Region 5). The hexachloroethane and/or PVC will be delivered in small, pre-measured plastic baggies at regular intervals along with other solid waste feeds during the performance test. The spiking will be adjusted based on the total chlorine/chloride content of the native wastes.

Veolia believes that the native wastes will contain sufficient chlorine content to comply with the requirement in 40 CFR §63.1207(g)(1)(A) for feeding normal (or higher) levels of chlorine during the test for dioxins/furans. If the native wastes that are going to be fed during the testing do not contain a sufficient chlorine content to achieve the targeted feedrate, Veolia may need to spike chlorine during the dioxins/furans tests. The average feedrate of chlorine from December 2012 through May 2013 was 35 lb/hr.

### 4.5.6 Spiking for Ash Loading

Pursuant to 40 CFR §63.1209(m)(3), Veolia will be establishing a maximum ash feedrate during the CPT. The maximum ash feedrate is an OPL to be established in association with the HWC MACT standard for PM. In addition to the ash being fed to the incinerator from the native wastes, the ash feedrate to the incinerator may be supplemented during the PM portion of the CPT if the ash content of the wastes do not contain a sufficient ash content to meet the targeted feedrate.

Veolia believes that the native wastes will contain sufficient ash content to comply with the requirement in 40 CFR §63.1207 (g) (1)(B) for feeding normal (or higher) levels of ash during the SVM and LVM performance tests. If the native wastes that are going to be fed during the testing do not contain a sufficient ash content to meet this requirement, Veolia may need to spike a high ash material into the solids feeds. The average feedrate of ash from December 2012 through May 2013 was 102 lb/hr.

## 4.6 Metals Extrapolation Method

As stated previously in this section, chromium (LVM), lead (SVM), and mercury will be spiked into the waste feeds to achieve the desired feedrates of each metals category. Veolia plans to extrapolate to higher feedrate limits than actually fed during the test using the SREs determined during the test. This is appropriate since it is generally agreed that SREs at higher feedrates would be at least as good as those observed at the lower level. Any extrapolation performed will take into consideration the HWC MACT standards to ensure full compliance.

The average feedrates of mercury, LVM, and SVM to Unit 2 from June 2012 through May 2013 were:

| | Mercury (lbs/hr) | LVM (lbs/hr) | SVM (lbs/hr) |
|---|---|---|---|
| Unit 2 | 0.00023 | 0.20 | 0.61 |

The maximum feedrates of mercury, LVM, and SVM to Unit2 from mid-February to mid-June 2013 were:

| | Mercury (lbs/hr) | LVM (lbs/hr) | SVM (lbs/hr) |
|---|---|---|---|
| Unit 2 | 0.0013 | 4.3 | 24.6 |

Based on previous discussions with EPA Region 5, the following approach will be used. The average SRE for the spiked compound for the three runs will be calculated from the feed and emission rates for each run. A feedrate limit will then be calculated for each metal category by dividing the maximum emission rate determined using 75% of the emission standard for that category by 1 minus the SRE (as a percentage) for the spiked compound representing that category. A similar approach will be followed for LVM (total and pumpable), SVM (cadmium and lead), and mercury. To further assure that this method is protective, Veolia proposes to limit the maximum feedrate for any one category to 3 times the spiked feedrate during the testing. The OPLs for feedrates of the metals will be established as 12-HRAs. Example calculations are shown below.

**Maximum Emission Rate for Extrapolation (lb/hr)**

$$= (\text{emission standard } (\mu g/m^3 @ 7\% O_2) * 0.75 * Q_{stack} (\text{dscfm} @ 7\% O_2) * 0.0283\ m^3/ft^3 * 60\ \text{min/hr}) / (453.6\ \text{g/lb} * 10^6\ \mu g/g)$$

Where

| | | |
|---|---|---|
| Emission standard ($\mu g/m^3$ @ 7% $O_2$) | = | Applicable HWC MACT emission standard; |
| 0.75 | = | 75% of the applicable HWC MACT emission standard; |
| Qstack (dscfm @ 7% $O_2$) | = | Average stack gas flowrate using the stack gas flowrate from each run normalized to 7% oxygen using the measured oxygen concentration from that run; |
| 0.0283 $m^3/ft^3$ | = | Conversion from cubic feet to cubic meters; |
| 60 min/hr | = | Conversion from minutes to hours; and |
| 453.6 g/lb * $10^6$ $\mu g/g$ | = | Conversion from micrograms to pounds |

**Extrapolated Feedrate (lb/hr)**

= Maximum Emission Rate / (1 – (SRE/100))

During the comprehensive performance testing, Veolia will spike metals at feedrates that are at the extreme range of normal. Veolia will feed metals at or above Veolia's defined NOC rates which are well above the average feed over the last five years. These demonstrated feedrates will be incorporated in the subsequent NOC. Veolia will discuss with the Agency any further requirements that may be necessary, such as varied carbon feed rates during mercury and dioxins/furans testing, before extrapolation is requested. Any additional information or testing requirements for extrapolation purposes will be done outside of the CPT to not only satisfy the Agency, but also to avoid conflicts between HWC MACT testing requirements and extrapolation requirements.

## 4.7 Description, Preparation and Delivery of Feeds for the CPT [40 CFR § 63.1207 (f)(1)(vi) and (vii)]

To the extent possible (and with the exception of the spiked constituents noted above), only normal waste materials processed at the facility will be fed to the incinerator during the test program. Waste materials will be stockpiled to meet the objectives for the target test parameters. These wastes will be characterized in advance of the test and kept until needed. All waste materials will be delivered to the facility in accordance with routine operation and currently permitted procedures as described elsewhere in this document.

## 4.8 Testing During Cleaning Cycles

40 CFR 63.1207(g)(1)(i)(C) requires that tests for PM, SVM, LVM, mercury, and dioxins/furans include a normal cleaning cycle of the PM control device. The baghouse is the unit of the air pollution control train that is designed and operated to control particulate matter. Testing for PM, SVM, LVM, mercury, and dioxins/furans will be performed during a cleaning cycle of the fabric filter (i.e., baghouse). Testing in all three runs of all tests conducted will include a cleaning cycle of the baghouse.

As discussed in Section 2.5.1 of this plan, jets of air are used to clean the filter bags of the baghouse. Periodically, the cleaning sequence is initiated, either at the end of a 4-hour timed cycle, when the differential pressure across the filter reaches a predetermined setpoint of approximately 7.0|| w.c., or when the operator initiates a cycle. Veolia will ensure that the baghouse undergoes a cleaning cycle during each run of the CPT.

## 4.9 Conditioning Time Needed to Reach Steady State [40 CFR § 63.1207(f)(1)(xii)]

Since there are no recirculating scrubber flows (the lime slurry to the spray dryer is once-through), the conditioning time prior to sampling for the Veolia units is governed primarily by the gas residence time from the feed point to the sampling locations. This residence time is approximately 5 seconds (see Section 2.3.4)

The conditioning time needed to achieve steady state operation of Unit 2 is 30 minutes Before sampling begins for a test run of the CPT, or a portion of the CPT, the incinerator will be operated for 30 minutes at the desired feedrates and operating conditions, and spiking of waste feeds will be performed for 30 minutes. This will assure all operating parameters are stabilized at the desired settings to achieve steady state, and that the feedrates of spiking materials have stabilized, before sampling begins.

## 4.10 AWFCO System during the CPT

The CPT will be conducted at operating conditions at the extreme range of normal. A primary objective of the test is to establish limits for operating parameters that ensure compliance with the emission standards during subsequent operations. The HWC MACT, at 40 CFR 63.1207(h)(1) and (2), waives the OPLs during subsequent performance testing under an approved test plan.

One of the objectives of the subsequent CPT is to establish certain HWC MACT limits at or near the limits in the current NOC. To accomplish operation near current OPLs, Veolia will disable the OPLs in the current NOC during the subsequent CPT.

Veolia currently does not envision pre-testing of Unit 2 prior to the CPT. If pre-testing is deemed to be necessary prior to the CPT, Veolia will request up to a 720-hour pre-testing period in which OPLs would be disengaged. Veolia will notify EPA Region 5 if pre-testing is to be conducted.

## 4.11 Anticipated Test Schedule

The subsequent CPT of Unit 2 will be performed at one test condition (i.e., one mode of operation), and one set of OPLs will be developed. There are two portions to the test condition. In the first part of the test, Veolia will demonstrate compliance with the particulate matter and $HCl/Cl_2$ standards of the HWC MACT while the plant is operating to establish the maximum ash feedrate, maximum chlorine feedrate, maximum combustion gas flowrate, and other applicable OPLs as required by the HWC MACT for the particulate matter and $HCl/Cl_2$ standards. In the second part of the test, Veolia will demonstrate compliance, and develop OPLs, with the dioxins/furans, THC, CO, LVM, SVM, and mercury standards of the HWC MACT while the

plant is operating to establish maximum total hazardous waste feedrate, maximum pumpable hazardous waste feedrate, minimum primary combustion chamber (PCC) temperature, minimum secondary combustion chamber (SCC) temperature, maximum LVM, SVM, and Hg feedrates, maximum chlorine feedrate, maximum combustion gas flowrate, and maximum inlet temperature to the baghouse. In addition, sampling for HCl/$Cl_2$ will be performed in the second part of the test using a modified application of EPA Method 26A (i.e., Modified Method 26A).

Both parts of the test condition will include three test runs, or test periods. An individual run of the CPT will be performed over three successive days with the testing for the two portions of the single test condition performed back-to-back on each of the three days. For the first part of the test, target operating conditions (i.e., normal waste feedrates, maximum ash and chlorine feedrates, maximum stack gas flowrate, and minimum sorbent and carrier fluid flowrates to the SDA) will be established and maintained, and chlorine will be spiked for 30 minutes prior to the start of testing. Once steady-state operations have been achieved, stack testing for PM and HCl/$Cl_2$ will begin along with the sampling of waste feeds. The sampling time of a Method 5/26A run for PM and HCl/$Cl_2$ will be one hour. It is anticipated that a Method 5/26A run for PM/HCl/$Cl_2$ will require approximately one and one-half to two hours to complete. The amount of time needed to complete stack sampling for PM and HCl/$Cl_2$ will determine the length of the first part of the test condition. The collection of samples of the waste feeds, and the collection of the chlorine spiking material, will be coordinated with the Method 5/26A stack sampling for PM and HCl/$Cl_2$ (i.e., with the first sample collected at the beginning, and then samples collected every 15 minutes until the completion of the Method 5/26A stack sampling).

Following completion of testing for the first part of the test, the operation of Unit 2 will be adjusted to the target operating conditions for the second portion of the test condition (i.e., maximum waste feedrates, normal temperatures in the PCC and SCC, maximum chlorine feedrate, maximum stack gas flowrate, and normal or higher ash feedrate). Steady-state operation will be established and maintained, and Cr, Pb, Hg, and chlorine will be spiked for 30 minutes prior to the start of testing. Once steady-state operations have been achieved, stack testing for LVM, SVM, and Hg using Method 29 ~~and~~ for dioxins and furans using Method 0023A, ~~and~~ THC using a continuous analyzer, and HCl/$Cl_2$ using a Modified Method 26A will begin concurrently along with sampling of waste feeds. The sampling time of a Modified Method 26A run for HCl/$Cl_2$ will be one hour. Since the Modified Method 26A probe will not be moved during its sampling, a Modified Method 26A run for HCl/$Cl_2$ will be completed in about one hour. The sampling time of a Method 29 run for LVM, SVM, and Hg will be two hours. It is anticipated that a Method 29 run for metals will require approximately two and one-half to three hours to complete. The sampling time of a Method 0023A run for dioxins and furans will be three hours, and the amount of time to complete a Method 0023A run for dioxins/furans is expected to be approximately three and one-half to four hours. The

collection of samples of the waste feeds will be coordinated with the Method 0023A stack sampling for dioxins/furans (i.e., with the first sample collected at the beginning, and then samples collected every 15 minutes until the completion of the Method 0023A stack sampling).

While spiking of Cr, Pb, Hg, and chlorine will continue throughout the second portion of the test, sampling of the spiking materials for Cr, Pb, Hg, and chlorine will be coordinated with the Method 29 stack sampling for LVM, SVM, and Hg (i.e., at the beginning, at port change, and at completion stack sampling). The three individual samples of the liquid spiking solutions of Cr and Hg will be analyzed. The individual samples of the solid spiking materials for Pb and chlorine will be archived. A fourth set of samples of the Cr, Pb, Hg, and chlorine spiking solutions and materials will be collected at the completion of the Method 0023A sampling train for dioxins/furans. This fourth sample of the spiking solutions and materials will be archived. Archived samples will be retained 90 days.

Table 4-5 presents a schedule for the conduct of the subsequent CPT of Unit 2.

## Table 4-5. Daily Schedule for the Subsequent CPT of Unit 2

| Day | Start | Stop | Activity |
|---|---|---|---|
| 1 | 8:00 | 17:00 | On-Site Mobilization |
| 2 | 6:00 | 8:00 | Unit Line Out – Run 1, First Part of the Test Condition |
| | 7:30 | | Begin Spiking of Chlorine |
| | 8:00 | 10:00 | Run 1, First Part of the Test Condition<br>- Stack Testing for PM/HCl-$Cl_2$<br>- Waste Feed Sampling (Samples Collected Every 15 Minutes; Composited and Individual)<br>■ First Sample at Start of PM/HCl-$Cl_2$ Sampling<br>■ Last Sample Prior to, or at, Completion of PM/HCl-$Cl_2$ Sampling<br>- Chlorine Spike Sampling (3 Samples Archived)<br>■ Taken from the Solid Waste Feed Container Collected at the Beginning, Mid-Point, and Completion of PM/HCl-$Cl_2$ Sampling Train |
| | 10:00 | 11:00 | Unit Line Out, Second Part of the Test Condition |
| | 10:30 | | Begin Spiking of Chromium, Lead, Mercury, and Chlorine |
| | 11:00 | 14:00 | Run 1, Second Part of the Test Condition<br>- Stack Testing for LVM, SVM, and Hg (Method 29), Dioxins/Furnas (Method 0023A), and HCl-$Cl_2$ (Modified Method 26A) – All stack sampling trains start concurrently<br>- Waste Feed Sampling (Samples Collected Every 15 Minutes; Composited and Individual)<br>■ First Sample at Start of Metals, ~~and~~ Dioxins/Furans, and HCl-$Cl_2$ Sampling<br>■ Last Sample Prior to, or at, Completion of Dioxins/Furans Sampling<br>- Cr, Pb, Hg, Chlorine Spike Sampling (3 Cr and Hg Samples Collected and Analyzed; 1 Sample Archived – All 4 Pb and Cl Samples Archived)<br>■ First Sample at Start of Metals and Dioxins/Furans Sampling<br>■ Second Sample at Port Change of Metals Sampling Train<br>■ Third Sample at Completion of Metals Sampling<br>■ Fourth Sample at Completion of Dioxins/Furans Sampling (Archived) |
| | ~~11:00~~ | ~~15:00~~ | ~~Run 1, Second Part of the Test Condition~~<br>~~- Stack Testing for Dioxins/Furans, THC~~<br>~~- Waste Feed Sampling (Samples Collected Every 15 Minutes; Composited and Individual)~~<br>~~■ First Sample at Start of Metals and Dioxins/Furans Sampling~~<br>~~■ Last Sample Prior to, or at, Completion of Dioxins/Furans Sampling~~<br>~~- Cr, Pb, Hg, Chlorine Spike Sampling (3 Cr and Hg Samples Collected and Analyzed; 1 Sample Archived – All 4 Pb and Cl Samples Archived)~~<br>~~■ First Sample at Start of Metals and Dioxins/Furans Sampling~~<br>~~■ Second Sample at Port Change of Metals Sampling Train~~<br>~~■ Third Sample at Completion of Metals Sampling~~<br>~~■ Fourth Sample at Completion of Dioxins/Furans Sampling (Archived)~~ |
| | 15:00 | 17:00 | Sample Recovery |

## Table 4-5. (continued) Daily Schedule for the Subsequent CPT of Unit 2

| Day | Start | Stop | Activity |
|---|---|---|---|
| 3 | 6:00 | 8:00 | Unit Line Out – Run 2, First Part of the Test Condition |
| | 7:30 | | Begin Spiking of Chlorine |
| | 8:00 | 10:00 | Run 2, First Part of the Test Condition<br>- Stack Testing for PM/HCl-$Cl_2$<br>- Waste Feed Sampling (Samples Collected Every 15 Minutes; Composited and Individual)<br>■ First Sample at Start of PM/HCl-$Cl_2$ Sampling<br>■ Last Sample Prior to, or at, Completion of PM/HCl-$Cl_2$ Sampling<br>- Chlorine Spike Sampling (3 Samples Archived)<br>■ Taken from the Solid Waste Feed Container Collected at the Beginning, Mid-Point, and Completion of PM/HCl-$Cl_2$ Sampling Train |
| | 10:00 | 11:00 | Unit Line Out, Second Part of the Test Condition |
| | 10:30 | | Begin Spiking of Chromium, Lead, Mercury, and Chlorine |
| | 11:00 | 14:00 | Run 2, Second Part of the Test Condition<br>- Stack Testing for LVM, SVM, and Hg (Method 29), Dioxins/Furnas (Method 0023A), and HCl-$Cl_2$ (Modified Method 26A) – All stack sampling trains start concurrently<br>- Waste Feed Sampling (3 Samples Collected Every 15 Minutes; Composited and Individual)<br>■ First Sample at Start of Metals, ~~and~~ Dioxins/Furans, and HCl-$Cl_2$ Sampling<br>■ Last Sample Prior to, or at, Completion of Dioxins/Furans Sampling<br>- Cr, Pb, Hg and Chlorine Spike Sampling (3 Cr and Hg Samples Collected and Analyzed; 1 Sample Archived – All 4 Pb and Cl Samples Archived)<br>■ First Sample at Start of Metals and Dioxins/Furans Sampling<br>■ Second Sample at Port Change of Metals Sampling Train<br>■ Third Sample at Completion of Metals Sampling<br>■ Fourth Sample at Completion of Dioxins/Furans Sampling (Archived) |
| | ~~11:00~~ | ~~15:00~~ | ~~Run 2, Second Part of the Test Condition~~<br>~~- Stack Testing for Dioxins/Furans, THC~~<br>~~- Waste Feed Sampling (3 Samples Collected Every 15 Minutes; Composited and Individual)~~<br>~~■ First Sample at Start of Metals and Dioxins/Furans Sampling~~<br>~~■ Last Sample Prior to, or at, Completion of Dioxins/Furans Sampling~~<br>~~- Cr, Pb, Hg and Chlorine Spike Sampling (3 Cr and Hg Samples Collected and Analyzed; 1 Sample Archived – All 4 Pb and Cl Samples Archived)~~<br>~~■ First Sample at Start of Metals and Dioxins/Furans Sampling~~<br>~~■ Second Sample at Port Change of Metals Sampling Train~~<br>~~■ Third Sample at Completion of Metals Sampling~~<br>~~■ Fourth Sample at Completion of Dioxins/Furans Sampling (Archived)~~ |
| | 15:00 | 17:00 | Sample Recovery |

## Table 4-5. (continued) Daily Schedule for the Subsequent CPT of Unit 2

| Day | Start | Stop | Activity |
|---|---|---|---|
| 4 | 6:00 | 8:00 | Unit Line Out – Run 3, First Part of the Test Condition |
| | 7:30 | | Begin Spiking of Chlorine |
| | 8:00 | 10:00 | Run 3, First Part of the Test Condition<br>- Stack Testing for PM/HCl-$Cl_2$<br>- Waste Feed Sampling (Samples Collected Every 15 Minutes; Composited and Individual)<br>■ First Sample at Start of PM/HCl-Cl2 Sampling<br>■ Last Sample Prior to, or at, Completion of PM/HCl-$Cl_2$ Sampling<br>- Chlorine Spike Sampling (3 Samples Archived)<br>■ Taken from the Solid Waste Feed Container Collected at the Beginning, Mid-Point, and Completion of PM/HCl-$Cl_2$ Sampling Train |
| | 10:00 | 11:00 | Unit Line Out, Second Part of the Test Condition |
| | 10:30 | | Begin Spiking of Chromium, Lead, Mercury, and Chlorine |
| | 11:00 | 14:00 | Run 3, Second Part of the Test Condition<br>- Stack Testing for LVM, SVM, and Hg (Method 29), Dioxins/Furnas (Method 0023A), and HCl-$Cl_2$ (Modified Method 26A) – All stack sampling trains start concurrently<br>- Waste Feed Sampling (3 Samples Collected Every 15 Minutes; Composited and Individual)<br>■ First Sample at Start of Metals, ~~and~~ Dioxins/Furans, and HCl-$Cl_2$ Sampling<br>■ Last Sample Prior to, or at, Completion of Dioxins/Furans Sampling<br>- Cr, Pb, Hg, Chlorine Spike Sampling (3 Cr and Hg Samples Collected and Analyzed; 1 Sample Archived – All 4 Pb and Cl Samples Archived)<br>■ First Sample at Start of Metals and Dioxins/Furans Sampling<br>■ Second Sample at Port Change of Metals Sampling Train<br>■ Third Sample at Completion of Metals Sampling<br>■ Fourth Sample at Completion of Dioxins/Furans Sampling (Archived) |
| | ~~11:00~~ | ~~15:00~~ | ~~Run 3, Second Part of the Test Condition~~<br>~~- Stack Testing for Dioxins/Furans, THC~~<br>~~- Waste Feed Sampling (3 Samples Collected Every 15 Minutes; Composited and Individual)~~<br>~~■ First Sample at Start of Metals and Dioxins/Furans Sampling~~<br>~~■ Last Sample Prior to, or at, Completion of Dioxins/Furans Sampling~~<br>~~- Cr, Pb, Hg, Chlorine Spike Sampling (3 Cr and Hg Samples Collected and Analyzed; 1 Sample Archived – All 4 Pb and Cl Samples Archived)~~<br>~~■ First Sample at Start of Metals and Dioxins/Furans Sampling~~<br>~~■ Second Sample at Port Change of Metals Sampling Train~~<br>~~■ Third Sample at Completion of Metals Sampling~~<br>~~■ Fourth Sample at Completion of Dioxins/Furans Sampling (Archived)~~ |
| | 15:00 | 17:00 | Sample Recovery |
| 5 | 8:00 | 17:00 | Composite Waste Samples, Pack and Ship Samples, Demobilize, Contingency |

In August and September of 2008, Veolia conducted tests of Units 2, 3, and 4 required by the information collection requests from USEPA Region 5 dated June 5, 2008 and September 12, 2008. These tests were designed to demonstrate compliance with the applicable emission standards of the HWC MACT for metals, and began on August 11, 2008 for Unit 2, August 5, 2008 for Unit 3, and August 21, 2008 for Unit 4. The initial Comprehensive Performance Tests of Units 2, 3, and 4 commenced on December 8, 2009 for Unit 2; on December 1, 2009 for Unit 3; and on December 16, 2009 for Unit 4. The HWC MACT, at 40 CFR § 63.1207(d), states *"The date of commencement of the initial comprehensive performance test is the basis for establishing the deadline to commence the initial confirmatory performance test and the next comprehensive performance test. You may conduct performance testing at any time prior to the required date. The deadline for commencing subsequent confirmatory and comprehensive performance testing is based on the date of commencement of the previous comprehensive performance test."* Veolia Sauget understands that EPA Region 5's position regarding commencement of the subsequent CPTs is based on the initiation of the metals tests performed in 2008, stating in a letter dated August 3, 2012—Veolia must submit to EPA a notification of intent to conduct a CPT and a site-specific test plan for the CPT at least one year before the performance test. 40 CFR § 63.1207(e)(1)(i)…by September 5, 2012||. Veolia submitted to EPA its notification of intent and site-specific test plan for the subsequent CPT on September 5, 2012.

## 4.12 Reporting

A Notification of Compliance (NOC) and test report of the subsequent CPT of Unit 2 will be prepared as separate documents and submitted to EPA Region 5 and Illinois EPA no later than 90 days from completion of the field test program. The test report will provide a complete, concise presentation of the test results and will include all necessary supporting documentation.

An example outline of the NOC is presented below:

**Section 1.0, Certification Statement** – Statement of compliance as required by 40 CFR 63.1210(d).

**Section 2.0, Introduction** – Summary of test program

**Section 3.0, Unit Description** – Brief unit description

**Section 4.0, Results of Comprehensive Performance Test** – Summary of the results of the Comprehensive Performance Test.

**Section 5.0, Operating Parameter Limits** – Listing of the OPLs established from the Comprehensive Performance Test, and the data, and regulatory requirements, used to establish the OPLs

**Section 6.0, Bases for Establishment of OPLs** – Summary of the regulatory requirements of the HWC MACT, and Veolia's approach to address those requirements

An example outline of the test report is presented below:

**Section 1.0, Executive Summary**– Summary of the test objectives and results

**Section 2.0, Process Operations**– Brief description of the unit, and the process operating data from the test

**Section 3.0, Sampling and Analytical Procedures**

**Section 4.0, Results**– The results of the test

**Section 5.0, Calculated Values**– Values calculated using the results, operating data, and spiking rates.

**Section 6.0, Quality Assurance / Quality Control** – Detailed discussion of sampling and analytical QA/QC procedures and results.

**APPENDIX A** – CEMS RATA Report
**APPENDIX B** – Spiking Report
**APPENDIX C** – Process Operating Data
**APPENDIX D** – CMS Performance Evaluation Test Report
**APPENDIX E** – Field Logbook
**APPENDIX F** – Sampling Documentation
**APPENDIX G** – Analytical Data Reports
**APPENDIX H** – Data Quality Assessments
**APPENDIX I** – Sampling Equipment/Instrumentation Calibration Documentation

# 5.0 Sampling, Analysis, and Monitoring Procedures

The subsequent CPT of Unit 2 will be performed at one test condition to demonstrate system performance and to establish appropriate operating parameter limits (OPLs) for all of the applicable standards of the HWC MACT. Sections 4.3.1, 4.3.2, and 4.3.3 present the tests at which the incinerator will be tested. The CPT will include three replicate sampling runs at the one test condition. Table 5-1 summarizes the parameters that will be measured during the test and the frequency of measurement. URS will perform all on site sampling activities during the CPT.

## 5.1 Sampling Locations and Procedures

Samples will be collected of solid, liquid, and gas streams during the CPT. This section describes the sampling methods that will be employed. Table 5-2 summarizes the sampling methods for each stream and the parameters that will be determined. Because most of the proposed methods are standard reference methods, only brief, summary type descriptions are presented. More detailed descriptions are presented in the indicated reference documents and in the Quality Assurance Project Plan (QAPjP) for the test.

### 5.1.1 Liquids Sampling Procedures

Samples of the liquid waste feed and chromium spiking solution will be collected in amber glass bottles with Teflon™ cap liners. The mercury solution samples will remain in the vials in which the mercuric nitrate solution was fed to the incinerator. Pre-cleaned bottles will be purchased and used to collect the samples. The liquid waste feed will be characterized for ash, total chlorine,heat content, moisture, density, and viscosityin the first part of the test, and ash, total chlorine,heat content, moisture, density, viscosity, andmetals (arsenic, beryllium, chromium, cadmium, lead, and mercury) in the second part of the test URS will be collecting the spike and waste samples.

Samples of the liquidwaste feed will be collected (approximately) every 15 minutes during each of the three runs of the CPT beginning at the start of stack sampling through completion of stack sampling for both the first and second parts of the CPT. Individual samples (i.e., sub-samples) will be collected (approximately) every 15 minutes throughout the test. No samples will be collected following the completion of stack sampling for the first part or second part of a run.

Samples of the liquid waste feed will be collected at 15-minute intervals during each run. At the beginning and at 15-minute intervals throughout the collection of the of the Method 5/26A sampling train of the first part of the test, approximately 500-mL samples of the liquid waste feed stream will be collected. At the beginning and at 15-minute intervals

throughout the collection of the Method 0023A sampling train of the second part of the test, approximately 200 mL samples of the liquid waste feed stream will be collected. The sub-samples will be collected at each designated sampling time, and the collected material (i.e., sub-sample) will be transferred into a larger container, producing a composite sample of the liquid waste feed. The composite liquid waste feed samples from the first part and the second part of the CPT will be analyzed.

In addition to the collection of sub-samples every 15 minutes of the liquid waste that will be used to prepare the composite samples that will be analyzed, individual 500 mL samples will be collected every 15 minutes. The individual 500-mL samples collected every 15 minutes will be archived for further analysis, if required. Archived samples will be retained for 90 days.

Samples of the chromium and mercury spiking solutions will be collected in each run of the second part of the test At the beginning, middle (at port change), and end of the Method 29 sampling of the second part of the test, approximately 125-mL samples of the chromium spiking solution will be collected. At the same frequency, samples of the mercury spiking solution will be collected from randomly selected waste feed containers. The individual samples of the chromium and mercury spiking solutions collected during each run of the test will be analyzed for chromium or mercury, respectively. A fourth sample of the chromium and mercury spiking solutions will be collected at thecompletion of the Method 0023A sampling train. This fourth sample will be archived. Archived samples will be retained for 90 days.

Liquid waste samples will be collected upstream of any metal spiking location using the tap sampling procedure specified in U.S. EPA Method S004,—Sampling and Analysis Methods for Hazardous Waste Combustion.‖ The sample tap will be flushed each time by allowing the sample to flow briefly before the sample is collected. This will ensure that any stagnant accumulation of solids, or other contaminants that may be present in the tap, does not affect the sample integrity or its representation of the stream being sampled.

Adequate amounts of the samples of the liquid waste feed and the chromium and mercury spiking solutions will be collected such that duplicate samples can be made available to EPA Region 5.

**Table 5-1. Measurement Frequency**

| Stream/Parameters | Sample Frequency for the Subsequent CPT | |
|---|---|---|
| | First Part | Second Part |
| **Liquid Waste Feed** | | |
| Ash | 3 | 3 |
| Chlorine | 3 | 3 |
| Moisture | 3 | 3 |
| Heating Value | 3 | 3 |
| Viscosity, Density | 3 | 3 |
| Metals | | 3[1] |
| **Solid Waste Feed - Containerized** | | |
| Ash | 3 | 3 |
| Chlorine | 3 | 3 |
| Moisture | 3 | 3 |
| Heating Value | 3 | 3 |
| Metals | | 3[1] |
| **Spiking Materials[2]** | | |
| Mercury Spiking Solution | | 3 |
| Lead Solid Spiking Material | | 3 |
| Chromium Spiking Solution | | 3 |
| Chlorine Solid Spiking Material (if spiked) | 3 | 3 |
| **Stack Gas** | | |
| Metals | | 3[1] |
| Particulate Matter and $HCl/Cl_2$ | 3 | |
| $HCl/Cl_2$ | ~~3~~ | 3 |
| Dioxins/Furans | | 3 |
| $CO_2$, $O_2$ | Continuous | Continuous[3] |
| Total Hydrocarbons | | Continuous[3] |
| Moisture | Concurrent with isokinetic sampling | Concurrent with isokinetic sampling |
| CO, $O_2$ [4] | Continuous | Continuous |

[1] Analysis is for As, Be, Cd, Cr, Pb, and Hg .

[2] Each collected sample of the mercury and chromium spiking solutions will be analyzed for the ta rget spiking metal. Samples of the lead and chlorine spiking materials will be archived.

[3] Allowing for hourly calibration of the THC monitor.

[4] Plant monitors.

## Table 5-2. Sampling Methods

| Stream | Sampling Method | Sampling Frequency | Compositing Approach | Analytical Parameters |
|---|---|---|---|---|
| Liquid Waste Feed | Tap<br>(Method S004) | First part of the test condition - Every 15 Minutes During Method 5/26A sampling<br><br>Second part of the test condition - Every 15 Minutes During Method 0023A sampling | Composite all subsamples from each test period | Ash<br>Chlorine<br>Moisture<br>Heating Value<br>Density<br>Viscosity<br>Metals[1] |
| Solid Waste Feed | Grab or Scoop<br>(Method S007) – Solids | First part of the test condition - Every 15 Minutes During Method 5/26A sampling<br><br>Second part of the test condition - Every 15 Minutes During Method 0023A sampling | Composite all subsamples from each test period | Ash<br>Chlorine<br>Moisture<br>Heating Value<br>Metals[1] |
| Chromium Spiking Solution | Tap<br>(Method S004) | Second part of the test condition - Beginning, middle, and end of Method 29 sampling<br><br>End of Method 0023A sampling | Analyze all subsamples collected during Method 29 sampling<br><br>Archive subsample collected at end of Method 0023A sampling | Chromium |
| Mercury Spiking Solution | Grab | Second part of the test condition - Beginning, middle, and end of Method 29 sampling<br><br>End of Method 0023A sampling | Analyze all subsamples collected during Method 29 sampling<br><br>Archive subsample collected at end of Method 0023A sampling | Mercury |

**Table 5-2. (continued) Sampling Methods**

| Stream | Sampling Method | Sampling Frequency | Compositing Approach | Analytical Parameters |
|---|---|---|---|---|
| Lead and Chlorine Spiking Materials | Grab | Second part of the test condition - Beginning, middle, and end of Method 29 sampling<br><br>End of Method 0023A sampling | None – Archive | Archive |
| Stack Gas | EPA Method 2 | Concurrent with isokinetic sampling for EPA Methods 5/26A and 29, and SW-846 Method 0023A | NR | Flow Rate |
| | EPA Method 3A | Concurrent with isokinetic sampling – First and Second Parts of the Test | NR | $O_2$, $CO_2$ |
| | EPA Method 4 | Concurrent with isokinetic sampling – First and Second Parts of the Test | NR | Moisture |
| | EPA Method 5<br>EPA Method 26A | 1+ hour collected isokinetically – First Part of the Test | NR | PM<br>$HCl/Cl_2$ |
| | Modified EPA Method 26A | 1+ hour collected isokinetically at single point – Second Part of the Test | NR | $HCl/Cl_2$ |
| | EPA Method 29 | 2+ hour collected isokinetically - Second Part of the Test | NR | Metals [1] |
| | SW-846 Method 0023A | 3+ hour collected isokinetically - Second Part of the Test | NR | Dioxins/Furans |
| | EPA Method 25A | Concurrent with isokinetic sampling – Second Part of the Test | NR | THC |
| | Plant CEMS | Continuous | NR | CO, $O_2$ |

[1] Analysis is for As, Be, Cd, Cr, Pb, and Hg only in samples from the second part of the test condition.

NR = Not Required

### 5.1.2 Solids Sampling Procedures

For the containerized solid waste feedstream, every 15 minutes throughout the test randomly selected container being fed to the incinerator will be collected. Sub-samples of the containerized solid waste collected from the first part of the test will be composited so that the result is a composite sample for the first part of the test. Likewise, sub-samples from the second part of the test will be composited to produce a composite sample for the second part of the test. In the preparation of the composite samples of the containerized solid waste that will be analyzed, sub-samples will be taken from the randomly selected containers using a pre-

cleaned scoop and combined. URS will be collecting the spike and waste samples.

Analyses will be performed on the composite samples. The containerized solid waste feed samples will be characterized for total chlorine,ash, moisture, andheat content in the samples from the first part of the test, and fortotal chlorine,ash, moisture,heat content, and metals (arsenic, beryllium, chromium, cadmium, lead, and mercury) from the second part of the test.

In addition, approximately 500-mL samples of the randomly selected containerized waste collected every 15 minutes will be taken and archived for further analysis, if required. Archived samples will be retained for 90 days.

Samples of the containerized solid waste feed will be collected (approximately) every 15 minutes during each of the three runs of the CPT beginning at the start of stack sampling through completion of stack sampling for the first and second parts of the CPT for each of the three units. Individual samples (i.e., sub-samples) will be collected (approximately) every 15 minutes throughout the test. No samples will be collected following the completion of stack sampling for the first part or second part of a run.

Spikes of solid lead and chlorine will be added to the containerized solid wasteSamples of the chlorine spiking material will be collected in each run of the first part of the test, and samples of the lead and chlorine spking materials will be collected in each run of the second part of the test Three grab samples of the chlorine spiking material will be collected at the beginning, middle (at port change), and end of the Method 5/26A sampling of the first part of the test. At the beginning, middle (at port change), and end of the Method 29 sampling of the second part of the test, grab samples of the lead and chlorine spiking materials will be collected. A fourth sample of the lead and chlorine spiking materials will be collected at the completion of the Method 0023A sampling train in the second part of the test All samples of the lead and chlorine spiking materialswill be archived. Archived samples will be retained for 90 days.

Adequate amounts of the samples of the solid waste feed and the lead and chlorine spiking materials will be collected such that duplicate samples can be made available to EPA Region 5.

### 5.1.3 Stack Gas Sampling Procedures

The stack gas emissions will be collected for determination of the parameters indicated in Tables 5-1 and 5-2. The methods that will be employed are described below.

#### 5.1.3.1 Sample Port Location

The stack is 90-feet high and has an inside diameter of 39 inches. There are two sets of two orthogonal ports located at two slightly different levels. The number of sampling points will be determined in accordance with EPA Method 1, and is discussed further in the QAPjP.

#### 5.1.3.2 EPA Methods 2 and 4 (Flowrate and Moisture)

Concurrent with the performance of the isokinetic sampling train, measurements will be made to determine gas velocity by 40 CFR Part 60, Appendix A, Method 2, and moisture by Method 4.

#### 5.1.3.3 EPA Method 29 (Metals)

Samples of the stack gas emissions will be collected isokinetically for the HWC MACT metals As, Be, Cd, Cr, Pb, and Hg using Method 29 from 40 CFR Part 60, Appendix A.

This method is basically an EPA Method 5 sampling train with some very specific modifications:

- The nozzle and probe liner will be glass or quartz. All connections will be glass or Teflon;
- The filter will be quartz or glass fiber, with a fritted glass or Teflon support;
- The first impinger will be empty (optional);
- The second and third impingers will contain a nitric acid/hydrogen peroxide solution;
- The fourth impinger will be empty;
- The fifth and sixth impingers will contain acidic potassium permanganate; and
- Modified Greenburg-Smith impinger containing silica gel.

Following sampling, the probe and nozzle of the sampling train will be recovered using a brush containing no metal. The probe and nozzle will be rinsed with 0.1 normal nitric acid.

Sampling will involve collecting samples isokinetically across both diagonals of the stack. The sampling rate for each train will be between 0.5 and 0.75 dry standard cubic feet per minute. A minimum of 45 dry standard cubic feet will be collected over a minimum sampling time of 120 minutes.

#### 5.1.3.4 EPA Method 5 (PM) / EPA Method 26A ($HCl/Cl_2$)

Samples for the determination of HCl, $Cl_2$, and particulate matter (PM) in stack emissions will be collected in the first part of each run of the test condition using a single sampling train

meeting the requirements of both EPA Method 26A and Method 5. This sample train consists of the following components:

- Glass (quartz) nozzle;
- Heated, glass (quartz)-lined probe;
- Heated Teflon mat filter with a Teflon filter support;
- Optional empty knockout impinger;
- Greenburg-Smith impinger containing 100 mL of 0.1 N $H_2SO_4$;
- Greenburg-Smith impinger containing 100 mL of 0.1 N $H_2SO_4$;
- Modified Greenburg-Smith impinger containing 100 mL of 0.1 N NaOH;
- Modified Greenburg-Smith impinger containing 100 mL of 0.1 N NaOH; and
- Modified Greenburg-Smith impinger containing silica gel.

The procedures specified in EPA Method 5 protocol will be used to determine particulate matter. These procedures require the isokinetic extraction of particulate matter on a filter maintained at a controlled temperature. In accordance with EPA Method 26A, the temperature of the filter will be maintained between 248°F and 273°F. A Teflon union will be used to connect the quartz nozzle to the quartz probe liner. The particulate mass, which includes all material that condenses at or above the filtration temperature, is determined gravimetrically, after desiccation.

Sampling will involve collecting samples isokinetically across both diagonals of the stack. The sampling rate for each train will be between 0.5 and 0.75 dry standard cubic feet per minute. A minimum of 30 dry standard cubic feet will be collected over a minimum sampling time of 60 minutes.

Chloride analysis will be performed on the impinger contents using ion chromatography according to Method 26A.

#### 5.1.3.5 Modified EPA Method 26A ($HCl/Cl_2$)

During the second part of the test condition of the CPT, samples for the determination of $HCl/Cl_2$ in stack emissions will be collected using a modification of EPA Method 26A. This sample train consists of the following components:

- Glass (quartz) nozzle;
- Heated, glass (quartz)-lined probe;
- Heated Teflon mat filter with a Teflon® filter support;
- Teflon® transfer line;

- Optional empty knockout impinger;
- Greenburg-Smith impinger containing 100 mL of 0.1 N $H_2SO_4$;
- Greenburg-Smith impinger containing 100 mL of 0.1 N $H_2SO_4$;
- Modified Greenburg-Smith impinger containing 100 mL of 0.1 N NaOH;
- Modified Greenburg-Smith impinger containing 100 mL of 0.1 N NaOH; and
- Modified Greenburg-Smith impinger containing silica gel.

The procedures specified in EPA Method 5, as referenced in EPA Method 26A, will be used for the isokinetic collection of the sample except that the sample will be collected at a single point located at the center of the stack. A Teflon® union will be used to connect the glass or quartz nozzle to the glass or quartz probe liner. The filter and probe will be kept at a temperature between 248°F and 273°F, and a Teflon®-backed filter will be used, as specified in EPA Method 26A.

Sampling will involve collecting samples isokinetically at a single point at the center of the stack. The sampling rate for each train will be between 0.5 and 0.75 dry standard cubic feet per minute. A minimum of 30 dry standard cubic feet will be collected over a minimum sampling time of 60 minutes.

Chloride analysis will be performed on the impinger contents using ion chromatography according to Method 26A.

### 5.1.3.~~65~~ SW-846 Method 0023A (Dioxins/Furans)

Stack gas emissions samples will be collected for dioxins/furans using SW-846 Method 0023A. The sampling train consists of a heated probe, heated filter, sorbent module, and pumping and metering unit. A gooseneck nozzle of proper size to allow isokinetic sample collection is attached to the probe. S-type pitot differential pressure is monitored to determine the isokinetic sampling rate.

From the heated filter, sample gas enters the sorbent module. The sorbent module consists of a water-cooled condenser followed by the XAD-2 resin trap. After the resin trap is a dry modified Greenburg-Smith impinger that collects the aqueous condensate. The stem of this impinger is short to reduce carryover of collected aqueous condensate. Following the condensate trap are two impingers containing 100 mL of DI water to collect any mist carryover from the condensate trap and a final impinger containing a desiccant to dry the sample gas before metering. A pump and dry gas meter are used to control and monitor the sample gas flowrate.

Sampling of the stack gases will be conducted in accordance with published protocol. This will involve collecting samples isokinetically across both diagonals of the stack. The

sampling rate for each train will be between 0.5 and 0.75 dry standard cubic feet per minute (dscfm). A minimum of 2.5 dry standard cubic meters (88.3 dry standard cubic feet) will be collected over a minimum sampling time of three hours.

#### 5.1.3.76 Continuous Emissions Monitoring (THC, $CO_2$, CO and $O_2$)

CEMs will be used to monitor the concentrations of THC (total hydrocarbons), $CO_2$, CO, and $O_2$ in the stack gas.

CO and $O_2$ results will be reported for the stack gases from permanent installation CEMS of the incinerator facility. THC, $CO_2$, and $O_2$ continuous monitors will be provided by the test contractor conducting the test.

The concentrations of total hydrocarbons (THC), carbon dioxide ($CO_2$), and oxygen ($O_2$) in the stack gas will be determined by the test contractor conducting the test using EPA Methods 25A and 3A, respectively. $CO_2$ and $O_2$ will be monitored using Method 3A to determine the stack gas composition (i.e., molecular weight) to determine the flowrate of the stack gas. Both of these methods utilize continuous monitors.

## 5.2 Analysis Procedures

Samples collected during the Comprehensive Performance Test will be analyzed for the parameters specified in Table 5-3. This section describes the analytical methods that will be employed. Since most of the proposed methods are standard reference methods, only brief summary type descriptions are presented. More detailed descriptions can be found in the indicated reference documents and in the QAPjP. All analyses will be performed by Test America Laboratories in Knoxville, TN. Analytical results for the waste feed samples will be reported on an *as-received* or *wet weight* basis. Samples of the waste feed will not be dried prior to analysis.

**Table 5-3. Summary of Analytical Methods**

| Parameter | Stream | Analytical Method |
|---|---|---|
| $O_2$, $CO_2$ | Stack Gas | EPA Method 3A |
| Moisture | Stack Gas | EPA Method 4 |
| Metals | Waste Feeds, Spiking Solutions, Stack Gas | ICPES - SW-846 Method 6010B<br>CVAAS - Hg, SW-846 Method 7470A or 7471A |
| Particulate Matter | Stack Gas | Gravimetric - EPA Method 5 |
| $HCl/Cl_2$ | Stack Gas | IC - EPA Method 26A |
| Dioxins/Furans | Stack Gas | HRGC/MS – SW-846 Method 8290 |
| Composition/Physical Parameters | Waste Feeds | EPA and/or ASTM Standard Methods |

### 5.2.1 Composition and Physical Parameters Analysis

Samples of the waste feeds will be collected for determination of a number of chemical and physical parameters, including:

- Ash;
- Total chlorine;
- Moisture;
- Heating value;
- Density; and
- Viscosity.

These analyses will be performed using appropriate EPA and/or ASTM standard methods.

### 5.2.2 Metals Analysis

Waste feed samples will be analyzed for metals using a trace level inductively coupled argon plasma emission spectroscopy (ICPES) and atomic absorption spectroscopy. Samples will be prepared for analysis using SW-846 Method 3050B. The metals to be analyzed by ICPES (SW-846 Method 6010B) are arsenic (As), beryllium (Be), cadmium (Cd), chromium (Cr), and lead (Pb). Mercury (Hg) will be analyzed using Method 7471A of SW-846. Spiking solutions of chromium and mercury will be analyzed for chromium and mercury, respectively.

The Method 29 sampling train will be used to collect samples of the stack gas for metals. The samples will be analyzed using ICPES according to SW-846 Method 6010B, and mercury will be analyzed using Method 7470A of SW-846. The metals to be analyzed by ICPES are As, Be, Cd, Cr, and Pb.

### 5.2.3 Particulate Matter Analysis

The particulate matter concentration of the stack gas will be determined following 40 CFR 60, Appendix A, Method 5 protocols. The wash from the nozzle, probe liner, and glassware prior to the filter on the sampling train will be evaporated, and the mass determined on an analytical balance. The filter will be removed from the sampling train, desiccated, and weighed to determine the mass of particulate on the filter. The combined mass from the filter and the evaporated wash are then related to the total volume of gas sampled to determine the particulate loading.

### 5.2.4 HCl and $Cl_2$ Analysis

The sulfuric acid and sodium hydroxide impinger catches and rinses from the Method 5/26A and Modified Method 26A sampling trains will be analyzed for chloride ion concentrations. Chloride analysis will be performed using EPA Method 26A, an IC technique.

### 5.2.5 Dioxins/Furans Analysis

Samples of the stack gas collected using SW-846 Method 0023A will be analyzed for dioxins/furans using SW-846 Method 8290, high resolution gas chromatography (HRGC) with high resolution mass spectroscopy (HRMS) analytical technique. The analytical protocol includes quantitation of all dibenzodioxins and dibenzofurans including four or more chlorine atoms. The method provides congener class definition for each of the five congener groups (tetra-, penta-, hexa-, hepta-, and octa-). In addition, each individual isomer containing the 2,3,7,8-substitution pattern will be individually quantified.

## 5.3 Process Monitoring Procedures

The incinerator system is monitored to ensure that it is operating in accordance with the permitted conditions. During the performance test, the automatic waste feed cutoff system will be operational; however, AWFCO limits in the current NOC will be adjusted or disabled during the performance testing period, and during up to a 720-hour pre-testing period prior to the test, if pre-testing is conducted. Veolia will notify EPA Region 5 if pre-testing is to be conducted.

## 5.4 Quality Assurance/Quality Control Procedures

An effective QA/QC strategy is essential to ensure the usefulness and reliability of data collected in any source testing effort. This QA/QC program is documented in a project-specific QAPjP. The QAPjP details QA/QC activities for the Comprehensive Performance Test, as well as specifications for sampling and analysis activities, objectives, and procedures. The QAPjP conforms to the requirements detailed in *Guidance for Quality Assurance Project Plans (QA/G-5).*

The primary objective of the QA/QC effort will be to provide the mechanism whereby the quality of the measurement data is known and documented and is subject to ongoing evaluation throughout the course of the project. To achieve this objective, the QA/QC program must serve two distinct, interrelated functions. One function will be that of providing a QC database which, together with performance audit results, can be used to assess measurement data quality in terms of precision and accuracy. Inherent and implied in this assessment function is a second, parallel function of controlling data quality within prescribed limits of acceptability.

The QAPjP delineates specific sampling and analytical procedures, calibration requirements, internal QC checks, data reduction and validation procedures, and sample custody requirements for each sampling/analytical activity. It also addresses general QA/QC considerations such as:

- Data recording;
- Documentation procedures;
- Project organization and responsibilities;
- Preventative maintenance operations;
- Reporting requirements; and
- Corrective action mechanisms.

In addition to these general considerations, the QAPjP specifies schedules for performance and the duration of sampling (especially for stack gas samples) to provide adequate method detection limits to demonstrate compliance with the metals emission standards. The QAPjP also devotes considerable attention to the internal QC checks that will be used to ensure that the measurement data meet data quality requirements. These QC checks include procedures such as:

- Daily calibration of analytical instruments;
- Calibration of sampling equipment and apparatus; and
- Analytical checks using QC standards to assess bias and precision.

The following sections present a brief overview of the QA/QC activities that are an integral part of the stack test program. Table 5-4 lists specific QA/QC activities that will be performed.

**Table 5-4. Summary of Sampling and Analytical QC Requirements[1]**

| | Field Blank[2] | Trip Blank[3] | Break-Through | Duplicate Sample or Analysis[4,5] | MS/ MSD[6] | LCS/LCSD | Surrogate Spike |
|---|---|---|---|---|---|---|---|
| **Particulate Matter** (EPA Method5) | | | | | | | |
| Stack Gas | 1 | 1 | | | | | |
| **$HCl/Cl_2$** (EPA Method 5/Method 26A and Modified Method 26A) | | | | | | | |
| Stack Gas | 1 | 1 | | All | 1 | 1 | |
| **Dioxins/Furans** (SW-846 Method 0023A) | | | | | | | |
| Stack Gas | 1 | 1 | | | | 1 | All |
| **Metals** (EPA Method 29) | | | | | | | |
| Stack Gas | 1 | 1 | | | 1 | 1 | |
| Waste Feeds | | | | 1 | 1 | 1 | |
| **Composition** | | | | | | | |
| Waste Feeds | | | | 1 | 1[7] | | |

[1] Table indicates number of QC samples planned for the Comprehensive Performance Test, unless otherwise indicated.

[2] Field blanks for gas samples are recovered from assembled trains that have been leak checked but through which no gas sample has passed.

[3] Trip blanks consist of applicable filters, sorbents, and solutions. These will be analyzed only if necessary based on field blank analysis results.

[4] Field duplicates will be collected as duplicate sets of subsamples used to prepare the composite sample.

[5] Field duplicate will be collected of the liquid waste only in the CPT of each unit.

[6] Matrix spiked samples will be spiked prior to sample preparation (digestion/extraction), except for metals train samples, which will be spiked following digestion.

[7] MS/MSD for chlorine only.

### 5.4.1 Sampling QA/QC

The QAPjP prescribes QC procedures to be implemented during all sampling activities and specifies guidelines for:

- Equipment calibration;
- Sampling protocol; and
- Sample handling techniques.

The checkout and calibration of sampling equipment is an important function in

maintaining data quality. Referenced calibration procedures are prescribed, and the results will be properly documented and retained. Calibrations will be performed prior to field deployment.

Sampling techniques to be used during the Comprehensive Performance Test will be EPA references. Sample collection will be done in accordance with the methods prescribed in the QAPjP. The QA procedure checks will include the use of standard data forms and source sampling data sheet checklists. Other checks will include performance of the following:

- Visual inspections of sampling systems;
- System leak checks before and after sampling;
- Heating system checks;
- Impinger ice checks;
- Isokinetic sampling rate checks; and
- Daily data review and calculation checks.

After the samples have been properly obtained in the field, their subsequent handling during transfer to the analytical laboratories becomes an important factor in the successful performance of a stack test program. All collected samples will be labeled with adequate descriptions of the samples to prevent confusion among multiple samples. Samples will be inventoried against logbook records before shipment. All sample container closures will be taped to ensure against sample leakage during shipment. The frequency of performance of specific activities for this stack testing is presented in Table 5-4.

### 5.4.2 Procedures for Analytical Quality Control

A regime of analytical QA/QC is specified in the QAPjP. The procedures will use various checks to determine the validity of analyses. These include:

- Calibration standards;
- Certified standards;
- In-lab standards;
- Blanks;
- Spikes; and
- Replicates.

QA begins with the sample log and continues through the reporting of data. The unique identifying number assigned in the field and recorded in the sample log facilitates tracking and identification and prevents mix-ups during the analysis process. Chain-of-custody reports will be used to monitor samples through analytical laboratories.

Chemical characterization of emission and process samples will be performed using standard wet-chemistry, IC, ICPES, AAS, and GC/MS techniques. The accuracy and precision of analyses will be documented through the QA/QC programs specified in the QAPjP. Accuracy will be evaluated by analyzing standards and blank and spiked samples. Precision data will be reported for matrix spike duplicates, analytical duplicate samples, and surrogate spikes.

# Appendix A

# Continuous Monitoring System Performance Evaluation Test Plan