Quality Assurance Project Plan for the Comprehensive Performance Tests of the Units 2 and 3 Fixed Hearth Incinerators and the Unit 4 Rotary Kiln Incinerator

Veolia ES Technical Solutions, L.L.C.
Sauget, IL

Prepared for:

Veolia ES Technical Solutions, L.L.C.
7 Mobile Avenue
Sauget, IL 62201

Prepared by:

URS Corporation
9400 Amberglen Boulevard (78729)
P.O. Box 201088
Austin, TX 78720-1088

September 25, 2013

Quality Assurance Project Plan for the Comprehensive Performance Tests of the Units 2 and 3 Fixed Hearth Incinerators and the Unit 4 Rotary Kiln Incinerator

Veolia ES Technical Solutions
7 Mobile Avenue
Sauget, IL 62201

APPROVALS

Doug Harris, General Manager Veolia ES Technical Solutions, L.L.C.	9/16/13 Date
David Klarich, Test Manager Veolia ES Technical Solutions, L.L.C.	9/16/13 Date
Michael Fuchs, Project Manager URS Corporation	9/16/13 Date
Eugene Youngerman, Project QA/QC Coordinator URS Corporation	26 September 2013 Date
Kevin Woodcock, Laboratory Project Manager Test America Laboratories	9-16-13 Date
~~Carla Rigell~~, QA/QC Manager Kevin McGee Test America Laboratories	9/16/13 Date

Note: 1) The individuals listed above have received, read, and agreed to the appropriate information pertaining to their project responsibilities listed and provided in the QAPP.
2) The individuals listed above agree that no testing methods have been modified other than the modifications identified in this document.

Note: 1) The individuals listed above have received, read, and agreed to the appropriate information pertaining to their project responsibilities listed and provided in this QAPP.
2) The individuals listed above agree that no testing methods have been modified other than the modifications identified in this document.

Distribution List:

Environmental Protection Agency, Region 5

Veolia ES Technical Solutions, L.L.C.

- David Klarich, Test Manager
- Dennis Warchol, EHS Manager

URS Corporation

- Michael Fuchs, Project Manager
- Dr. Eugene Youngerman, QA/QC Coordinator
- Sampling Coordinator
- Analytical Coordinator
- Sampling Team Members

Test America - Knoxville

- Kevin Woodcock – Laboratory Project Manager
- Chris Rigell – QA/QC Manager

Table of Contents

Page

1.0 Introduction and Problem Definition ..... 1 of 3

2.0 Project Organization ..... 1 of 3

3.0 Quality Assurance Objectives ..... 1 of 3

4.0 Program Summary ..... 1 of 24
4.1 Performance Standards ..... 1 of 24
4.2 Test Condition ..... 2 of 24
4.2.1 Test Condition for Units 2 and 3 ..... 2 of 24
4.2.1.1 Maximum Feedrate of Ash ..... 3 of 24
4.2.1.2 Maximum Feedrate of Metals and Chlorine, Maximum Waste Feedrates ..... 4 of 24
4.2.2 Test Condition for Unit 4 ..... 6 of 24
4.2.2.1 Maximum Feedrate of Ash ..... 6 of 24
4.2.2.2 Maximum Feedrate of Metals and Chlorine, Maximum Waste Feedrates, Minimum Carbon Feedrate ..... 9 of 24
4.3 Establishing Operating Parameter Limits ..... 12 of 24
4.4 Waste Selection ..... 13 of 24
4.5 Waste Feed Spiking ..... 13 of 24
4.5.1 Inorganic Constituents ..... 14 of 24
4.5.2 Spiking for the LVM Category ..... 14 of 24
4.5.3 Spiking for the SVM Category ..... 16 of 24
4.5.4 Spiking for Mercury ..... 16 of 24
4.5.5 Spiking for Chlorine Loading ..... 16 of 24
4.5.6 Spiking for Ash Loading ..... 17 of 24
4.6 Testing During Cleaning Cycles ..... 17 of 24
4.7 Conditioning Time Needed to Reach Steady State ..... 18 of 24
4.8 Anticipated Test Schedule ..... 18 of 24

5.0 Sampling and Monitoring Procedures ..... 1 of 30
5.1 Method Modifications ..... 1 of 30
5.2 Stack Gas Sampling ..... 12 of 30
5.2.1 EPA Method 1 (Sample Port Location) ..... 12 of 30
5.2.2 EPA Methods 2, 3A and 4 (Flowrate, Gas Composition, and Moisture ..... 13 of 30
5.2.3 Particulate Matter (EPA Method 8) ..... 18 of 30
5.2.4 Hydrogen Chloride/Chlorine (Modified EPA Method 26A) ..... 19 of 30
5.2.5 EPA Method 29 (Multiple Metals) ..... 21 of 30
5.2.6 SW-846 Method 0023A (Dioxins/Furans) ..... 23 of 30
5.2.7 Continuous Emission Monitors ..... 25 of 30

Table of Contents (continued)

Page

5.3 Waste Feed Sampling Procedures ..... 26 of 30
5.3.1 Liquids Sampling Procedures ..... 26 of 30
5.3.2 Solids Sampling Procedures ..... 28 of 30

6.0 Sample Handling, Traceability, and Holding Times ..... 1 of 5
6.1 Sample Handling ..... 1 of 5
6.2 Traceability ..... 2 of 5
6.3 Holding Times ..... 3 of 5
6.4 Sample Shipping and Logistics ..... 3 of 5

7.0 Calibration Procedures ..... 1 of 6
7.1 Type-S Pitot Tube Calibration ..... 1 of 6
7.2 Sampling Nozzle Calibration ..... 1 of 6
7.3 Temperature Measuring Device Calibration ..... 3 of 6
7.4 Dry Gas Meter and Orifice Calibration ..... 3 of 6

8.0 Analytical Procedures ..... 1 of 7
8.1 Analysis of Stack Gas Sample for Particulate Matter ..... 1 of 7
8.2 Analysis of Stack Gas Samples for Hydrogen Chloride/Chlorine ..... 3 of 7
8.3 Analysis of Stack Gas Samples for Metals ..... 4 of 7
8.4 Analysis of Stack Gas Samples for Dioxins/Furans ..... 5 of 7
8.5 Analysis of Waste Feeds and Spiking Solutions ..... 6 of 7

9.0 Internal Quality Control Checks ..... 1 of 14
9.1 Sampling Quality Control Checks ..... 3 of 14
9.1.1 Stack Gas Sampling ..... 3 of 14
9.1.2 Waste Sampling ..... 7 of 14
9.2 Analytical Quality Control Activities ..... 8 of 14
9.2.1 QC for Determination of Particulate in Stack Gas ..... 8 of 14
9.2.2 QC for Determination of Hydrogen Chloride/Chlorine in Stack Gas ..... 8 of 14
9.2.3 QC for Determination of Metals in Stack Gas and Waste ..... 9 of 14
9.2.4 QC for Determination of Dioxins/Furans in Stack Gas ..... 11 of 14
9.2.5 QC for Determination of Composition by ASTM Methods ..... 12 of 14
9.2.6 QC for Spiking of Waste ..... 14 of 14

10.0 Data Reduction, Validation, and Reporting ..... 1 of 6
10.1 Calculations ..... 1 of 6
10.1.1 Stack Gas Mass Emission Rate Calculations ..... 1 of 6
10.1.2 Constituent Feedrate Calculations ..... 2 of 6
10.1.3 System Removal Efficiency Calculations ..... 3 of 6
10.1.4 Correction to 7% Oxygen ..... 3 of 6
10.1.5 Stack Gas Volumetric Flowrate ..... 3 of 6

Table of Contents (continued)

Page

10.2 Data Validation ..... 5 of 6
10.3 Chain-of-Custody Documentation ..... 6 of 6
10.4 Reporting ..... 6 of 6

11.0 Assessment of Precision, Accuracy, and Completeness ..... 1 of 2
11.1 Precision ..... 1 of 2
11.2 Accuracy ..... 1 of 2
11.3 Completeness ..... 2 of 2

12.0 Corrective Action and QA Reporting ..... 1 of 2
12.1 Audit Procedures ..... 1 of 2
12.2 Corrective Action ..... 1 of 2
12.3 Quality Assurance Reporting ..... 2 of 2

APPENDIX A – Resume of Dr. Eugene Youngerman
APPENDIX B – Metals and Chlorine Spikes SOP
APPENDIX C – Liquid Waste Sampling SOP
APPENDIX D – Solid Waste Compositing SOP
APPENDIX E – URS Corporation SOPs and Test America Laboratories - Knoxville SOPs

List of Figures

Page

2-1 Project Organization Chart ..... 3 of 3

5-1 Stack Sampling Location – Units 2 and 3 ..... 14 of 30
5-2 Stack Sampling Location – Unit 4 ..... 15 of 30
5-3 Traverse Point Data Sheet ..... 16 of 30
5-4 Isokinetic Sampling Data Sheet ..... 17 of 30
5-5 Schematic Drawing of Modified EPA Method 26A Sampling Train for Determination of Hydrogen Chloride/Chlorine ..... 20 of 30
5-6 Sampling Train Schematic – Multiple Metals Sampling Train, Method 29 ..... 22 of 30
5-7 Sampling Train Schematic – Dioxins/Furans by SW-846 Method 0023A ..... 24 of 30
5-8 Continuous Emission Monitoring System ..... 26 of 30
5-9 Process Sampling Data Sheet ..... 30 of 30

6-1 Example Transfer Form for Samples ..... 5 of 5

7-1 Pitot Tube Inspection Sheet ..... 2 of 6
7-2 Temperature Readout Calibration Data Sheet ..... 4 of 6
7-3 Dry Gas Meter Calibration Data Sheet ..... 5 of 6
7-4 Post Test DGM Calibration Data Sheet ..... 6 of 6

List of Tables

Page

3-1 Quality Assurance Objectives ..... 3 of 3

4-1 Applicable HWC MACT Emission Standards ..... 2 of 24
4-2 Target Feedrates and Operating Conditions for Units 2 and 3 ..... 4 of 24
4-3 Target Feedrates and Operating Conditions for Unit 4 ..... 7 of 24
4-4 HWC MACT OPLs to be Established During the Comprehensive Performance Test for Units 2 and 3 ..... 8 of 24
4-5 HWC MACT OPLs to be Established During the Comprehensive Performance Test for Unit 4 ..... 11 of 24
4-6 Emission Standards versus Operating Parameters ..... 12 of 24
4-7 Metals Evaluation Plan ..... 15 of 24
4-8 Daily Schedule for the Subsequent CPT of Units 2, 3, and 4 ..... 21 of 24

5-1 Measurement Frequency During the CPT of Units 2, 3, and 4 ..... 2 of 30
5-2 Sampling Methods ..... 3 of 30
5-3 Emissions Sampling Specifications ..... 5 of 30
5-4 Method Modifications ..... 6 of 30

6-1 Summary of Sample Preservation and Holding Time Requirements ..... 4 of 5

8-1 Summary of Analytical Methods ..... 2 of 7
8-2 Target Analytes for Determination of Metals ..... 5 of 7
8-3 Target Analytes for Determination of Dioxins/Furans ..... 6 of 7

9-1 Summary of Sampling and Analytical QC Requirements ..... 2 of 14
9-2 Summary of QC Checks for Hydrogen Chloride/Chlorine Analysis ..... 9 of 14
9-3 Summary of QC Checks for Metals Analysis ..... 10 of 14
9-4 Summary of QC Checks for Dioxins/Furans Analysis by HRGC/HRMS ..... 11 of 14
9-5 Summary of Analytical QC Checks for Analysis of Waste Feed Samples for Heating Value, Density, Ash, Viscosity, Total Chlorine, and Moisture ..... 12 of 14

1.0 Introduction and Problem Definition

Veolia ES Technical Solutions, L.L.C. (Veolia) operates three incinerators at its Sauget, Illinois facility. Two of the incinerators are fixed hearth units (Units 2 and 3), and the third incinerator is a rotary kiln unit (Unit 4). All of the incinerators treat certain wastes that are classified as hazardous under state and/or federal regulations, and are subject tothe National Emission Standards for Hazardous Air Pollutants (NESHAPs) for Hazardous Waste Combustors (Title 40 of the Code of Federal Regulations, Part 63 [40 CFR Part 63], Subpart EEE), (i.e., the HWC MACT).

In August and September of 2008, Veolia conducted tests of Units 2, 3, and 4 required by the information collection requests from U.S. EPA Region 5 dated June 5, 2008 and September 12, 2008. Those tests began on August 11, 2008 for Unit 2, August 5, 2008 for Unit 3, and August 21, 2008 for Unit 4. The test plans for these tests were approved by U.S. EPA Region 5. The tests were designed to demonstrate compliance with the applicable emission standards of the HWC MACT for metals codified at 40 CFR § 63.1219(a)(2), 40 CFR § 63.1219(a)(3), and 40 CFR § 63.1219(a)(4) for mercury, cadmium and lead (i.e., Semivolatile Metals – SVM), and arsenic, beryllium, and chromium (i.e., Low Volatility Metals - LVM). The tests also established Operating Parameter Limits (OPLs) for mercury, and SVM and LVM codified at 40 CFR § 63.1209(l) and 40 CFR § 63.1209(n), respectively.

The initial Comprehensive performance tests of Units 2, 3, and 4 commenced on December 8, 2009 for Unit 2; on December 1, 2009 for Unit 3; and on December 16, 2009 for Unit 4. The Comprehensive Performance Tests were performed in accordance with Comprehensive Performance Test Plans approved by U.S. EPA Region 5 on November 25, 2009. The HWC MACT, at 40 CFR § 63.1207(d), states *"The date of commencement of the initial comprehensive performance test is the basis for establishing the deadline to commence the initial confirmatory performance test and the next comprehensive performance test. You may conduct performance testing at any time prior to the required date. The deadline for commencing subsequent confirmatory and comprehensive performance testing is based on the date of commencement of the previous comprehensive performance test."* Veolia Sauget understands that U.S. EPA Region 5's position regarding commencement of the subsequent CPTs is based on the initiation of the metals tests performed in 2008, stating in a letter dated August 3, 2012 —Veolia must submit to EPA a notification of intent to conduct a CPT and a site-specific test plan for the CPT at least one year before the performance test. 40 CFR § 63.1207(e)(1)(i)…by September 5, 2012||. Veolia submitted to EPA its notification of intent and site-specific test plan for the subsequent CPT by this date.

This document is a Quality Assurance Project Plan (QAPjP) for the subsequent Comprehensive Performance Tests of Units 2, 3 and 4. The testing for the CPTs of all three incinerators is the same. This QAPjP provides specifications for the testing described in the Comprehensive Performance Test Plans for the respective units, and is for the CPTs of all three incinerators. All of the applicable parameters of the HWC MACT including dioxins/furans, total hydrocarbons (THC), carbon monoxide (CO), particulate matter (PM), hydrogen chloride/ chlorine gas (HCl/Cl_2), mercury, SVM, and LVM will be determined during the CPTs. Engineering descriptions of each of the three Veolia incinerators at the Sauget plant are provided in the respective Comprehensive Performance Test Plan.

The CPTs of each of the three incinerators are designed to demonstrate compliance with targeted HWC MACT emissions standards while establishing OPLs required in association with the targeted standard, or standards. There will be one test condition conducted on each of the three incinerators – Units 2, 3, and 4, and one set of OPLs will be established for each unit.

In the first part of each test run for each unit, compliance will be demonstrated with the emission standard for PM, and the OPLs required in association with the PM emission standard will be developed. In the second part of each test run of each unit, compliance will be demonstrated with the emission standards for Hydrogen chloride acid and chlorine gas (HCl/Cl_2), Low Volatility Metals (LVM), Semivolatile Metals (SVM), mercury, dioxins/furans, and THC, and the OPLs required in association with these emission standards will be developed. In both the first and second parts of the test, CO and O_2 will be monitored using plant CEMS. There will be three test runs performed at the one test condition for each of the three units.

While the objectives for the subsequent CPTs of all three units are the same, the tests for Units 2 and 3 are slightly different than for Unit 4. The primary reasons for this are that Unit 4 includes carbon injection into the flue gas while Units 2 and 3 do not have carbon injection, and Unit 4 has one more solid waste feed stream than Units 2 and 3 (bulk solids in addition to containerized solids).

In the first part of each test of the CPTs - for Units 2, 3, and 4 - the incinerators will be operated at normal combustion zone temperatures with normal waste feedrates. The feedrate of ash will be maximized.

The second part of the CPTs is designed to demonstrate compliance with the emission limits and to establish OPLs for the Final Replacement Standards of the HWC MACT for HCl/Cl_2, LVM, SVM, mercury, dioxins/furans, and THC. Units 2 and 3 will be operated at maximum hazardous waste feedrates, maximum metals and chlorine feedrates achieved by spiking waste fed to the unit, and normal combustion zone temperatures. Although Veolia will be establishing a minimum PCC temperature during this part of the test, the incinerators will be operated at normal temperatures, which will be higher than the current minimum PCC temperature OPL.

In the first part of the CPTs of all three units, PM emissions will be measured, and the waste feeds will be sampled and analyzed. In the second part of the CPTs of all three units HCl/Cl_2, mercury, the SVM metals cadmium and lead, the LVM metals arsenic, beryllium, and chromium, dioxins/furans, and total hydrocarbons THC) will be measured, and a separate set of the waste feeds and spiking materials and solutions (separate from the first part of the test) will be sampled and analyzed.

2.0 Project Organization

The project organization for the performance and reporting of the Comprehensive Performance Tests of the Units 2, 3, and 4 incinerators at Veolia Sauget is presented in Figure 2-1. The responsibilities of the key personnel are outlined in this section.

David Klarich is the Veolia Test Manager and is responsible for the Comprehensive Performance Test programs. Mr. Klarich will be responsible for the overall performance and coordination of the test effort and for all agency communications concerning the Comprehensive Performance Tests.

URS Corporation (URS) will serve as the performance test coordinator, and will perform sampling and analysis for the test. URS' responsibilities include coordination of unit operations, the collection of stack gas samples, transport of collected samples to the laboratory, analysis of all samples (using a subcontract laboratory), and preparation of the test report.

Michael Fuchs of URS will serve as the Project Manager. In this role, he has the overall responsibility for the success and quality of the URS effort.

Dr. Eugene Youngerman of URS will serve as QA/QC Officer. He is responsible for the development of the QA/QC activities, as well as data review and reporting from a quality and data validation perspective. He will prepare the QA/QC section of the final report, focusing on data quality issues.

Dr. Youngerman will perform data validation for the CPT. He has over 25 years of experience including document preparation; test protocol design and preparation; laboratory coordination; method development; plan implementation; and interpretation and reporting of sampling, analysis and QA/QC results. As shown in Figure 2-1, while Dr. Youngerman is part of URS' project team, he not only has direct lines of communication with URS' Project Manager but also with Veolia's Test Manager. Dr. Youngerman's resume is in Appendix A to this QAPjP.

Meggen DeLollis will serve as the Field Sampling Coordinator. In this role, she will be responsible for the day-to-day performance of the URS activities in the field, and will be responsible for sample shipment to the laboratories. Ms. DeLollis will have primary authority for decisions concerning sampling and analysis. Ms. DeLollis will also be responsible for the organization and execution of the mobilization effort, and will be responsible for the acquisition and calibration of all equipment and supplies.

Meggen DeLollis will also be responsible for the analysis phase of this program. She will be the focal point for communication between the field team and the analytical laboratories, as well as the key for receipt of data, and support information from the laboratories. She is responsible that the laboratories implement the QA/QC requirements in this document. She will be responsible for coordination of all analyses and preliminary review of analytical data.

Data review and reporting will be the responsibility of the task leaders described above. Michael Fuchs will have the responsibility for preparation of the final report.

Figure 2-1. Project Organization Chart

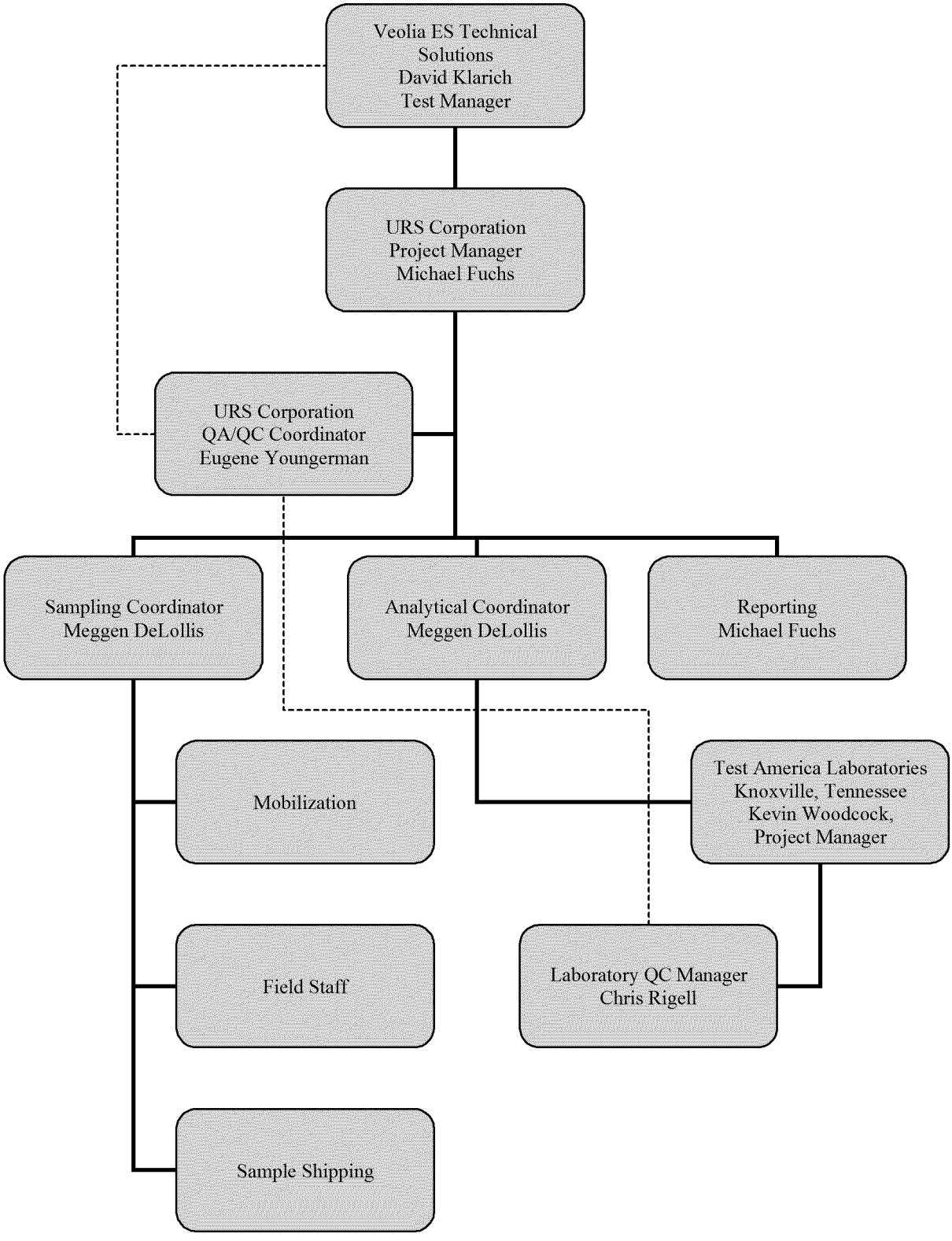

3.0 Quality Assurance Objectives

This section presents quality assurance (QA) objectives for all of the measurement parameters for the Comprehensive Performance Tests:

- Particulate matter in the stack gas;
- HCl and Cl_2 in the stack gas;
- Metals (SVM, LVM, and mercury) in the stack gas;
- Dioxins/furans in the stack gas;
- THC in the stack gas;
- Metals in the waste feed;
- Ash in the waste feed;
- Chlorine in the waste feed;
- Moisture of the waste feed;
- Caloric (Heating) Value of the waste feed;
- Density of liquid waste feed; and
- Viscosity of liquid waste feed.

The objectives and goals of the test are delineated in Section 1.0 of this document.

Table 3-1 summarizes the QA objectives for the measurement parameters in terms of accuracy, precision, and completeness. No precision or accuracy measurement for particulate matter in the stack gas, while a critical measurement, is listed in Table 3-1 because they cannot be readily measured in a test. Adherence to the method protocol, which includes performance-related activities such as sampling equipment calibration, isokinetic sampling, balance calibration, desiccating filters to a constant weight, etc., is the basis for achieving acceptable method accuracy. For other critical measurement parameters, the performance objectives are expressed by conditions that can be appraised experimentally.

The completeness objective reflects the requirement to provide three valid determinations of each target measurement. The subsequent CPTs of all three incinerators will include one test condition to demonstrate system performance and to establish appropriate operating parameter limits (OPLs) for all of the applicable standards of the HWC MACT. Sections 4.2.1 and 4.2.2 present the tests at which the incinerators will be tested. The CPT of all three incinerators will include three replicate sampling runs at one test condition for each incinerator. The completeness objective of 100% in the table below reflects the need to develop three valid determinations. Since additional samples cannot be collected after the test, any loss of anticipated data through

sample breakage or mishandling after the field portion of the test will be carefully evaluated with respect to the impact of project objectives. All QA/QC data will be thoroughly interpreted in the final report.

If the QA objectives for accuracy and precision are not met, careful interpretation of the analytical data will be made to evaluate the associated impact on the performance demonstrations. Results that are outside of these objectives may indicate matrix interferences that are sometimes present in stack emission samples. As such, results that are outside these specifications do not necessarily invalidate the data, but rather indicate the need to evaluate the data carefully and explain potential biases and/or limitations in the use of the data. The evaluation for data validity will be based (among other things) on the evaluation of the laboratory's adherence to the QC and corrective action specifications.

Other QA objectives are representativeness and comparability. Representativeness is a function of sampling strategy. Representative stack gas samples will be collected by following approved reference methods, which are specifically developed to acquire representative samples (i.e., collection over time period, compositing of multiple samples, etc.). All samples will be collected only under stable and specific operating conditions.

Comparability is the degree to which data from a given study can be compared to data from other similar studies. Data comparability will be ensured by adhering to the standard methods specified in this document. Analytical results will also be presented in appropriate standard units according to industry conventions.

Table 3-1. Quality Assurance Objectives

Parameter	Reference	Precision [1]	Accuracy [2]	Completeness [3]
HCl/Cl_2 in Stack Gas [4]	EPA Method 26A (precision); Test America SOP (accuracy)	10% RPD for duplicate analysis for each sample	75-125% recovery for matrix spike	100%
Metals in Stack Gas [4]	EPA QA/QC Procedures for Hazardous Waste Incineration, January 1990	20% RPD for matrix spike/matrix spike duplicate	70-130% recovery for matrix spikes	100%
Dioxins/Furans in Stack Gas [4]	SW-846 Method 0023A	30% RSD for pooled surrogate recoveries	70-130% recovery of method-specified surrogates	100%
THC in Stack Gas [5]	EPA Method 25A	Span and zero drift within 3% of span	Calibration error within 5% of calibration gas value	90%
Metals in Waste Feed and Spiking Solutions [4]	EPA QA/QC Procedures for Hazardous Waste Incineration, January 1990	20% RPD for matrix spike/matrix spike duplicate	75-125% recovery for matrix spikes for mercury, 70-130% recovery for matrix spikes for all other metals	100%
Ash in Waste Feed [4]	ASTM Method D-482	10% RPD for laboratory control sample/laboratory control sample duplicate	90-110% recovery for laboratory control sample	100%
Chlorine in Waste Feed [4]	SW-846 Method 5050 and 9056A	10% RPD for matrix spike/matrix spike duplicate	80-120% recovery for matrix spikes	100%
Percent Water (Moisture) in Liquid Waste Feed [4]	ASTM Method E-203 or ASTM Method D-4017	10% RPD for Percent Water values ≥ 1%	95-105% recovery for laboratory control sample 95-105% recovery for continuing calibration verification	100%
Moisture in Solid Waste Feed [4]	ASTM Method D-5142 or ASTM Method D-160.3	25% RPD for sample duplicate analysis	N/A Gravimetric Test	100%
Caloric (Heating) Value of Waste Feed [4]	ASTM Method D-5865 or ASTM Method D-240	10% RPD for laboratory duplicates	98-102% recovery for laboratory control sample	100%
Density of (Liquid) Waste Feed [4]	ASTM Method D-1475	10% RPD for analytical duplicates	99-101% recovery for laboratory control sample	100%
Viscosity of (Liquid) Waste Feed [4]	ASTM Method D-445	10% RPD for analytical duplicates	<1% of calibration check sample	100%

[1] Precision is expressed according to the type of measurement. For surrogate spikes and replicate assays, precision is expressed as percent relative standard deviation (RSD) for the set of spike recoveries or assay results. For objectives measured by matrix spike duplicates (MSD) or duplicate analyses, precision is expressed as the relative percent difference (RPD) between MS/MSD recoveries or duplicate analyses.

[2] Accuracy is expressed in terms of percent error, or difference between a measured value and the theoretical value, expressedas a percentage of the theoretical. For assays, the objective is based on the mean measured value. For surrogate and matrix spike (MS) recoveries, the objective is based on single measurement results.

[3] Completeness is the total number of valid measurement results, expressed as a percentage of the number planned.

[4] Test America Knoxville will be performing these analyses.

[5] URS Austin will perform THC measurements onsite with a continuous emissions monitor. EPA Method 25A requires an hourly drift check to be performed during each test run.

4.0 Program Summary

The objectives for the subsequent CPTs of Units 2,3, and 4 will be accomplished while conducting one test condition, all to be performed with triplicate runs. A brief description of the test condition is provided below along with a description of the applicable emission limits, target operating conditions, and the resulting operating parameter limits (OPLs).

4.1 Performance Standards

The CPTs have been designed to demonstrate compliance with all of the applicable emission of the HWC MACT as shown in Table 4-1 including:

- Carbon Monoxide;
- Total Hydrocarbons;
- Dioxins/Furans;
- Particulate Matter;
- Mercury;
- Semivolatile Metals (SVM) (Cd and Pb combined);
- Low Volatility Metals (LVM) (As, Be and Cr combined); and
- Hydrogen Chloride/Chlorine (HCl/Cl_2).

A performance evaluation test of the Continuous Monitoring System (CMS) of the three units will be performed in association with the CPT. A Relative Accuracy Test Audit (RATA) for the CO and O_2 Continuous Emissions Monitoring Systems (CEMS) of the three units will be performed to coincide with the CPT (i.e., within 60 days of the CPT).

Compliance with the DRE standard (99.99% DRE) is demonstrated using data from previous RCRA Trial Burns for all three incinerators.

Table 4-1. Applicable HWC MACT Emission Standards

Emissions Parameter	Limit	Citation
Dioxins/Furans (TEQ basis)	≤ 0.20 ng/dscm (Units 2 and 3) ≤ 0.40 ng/dscm (Unit 4)	40 CFR 63.1219(a)(1)(i)(A) 40 CFR § 63.1219(a)(1)(i)(B)
Mercury	≤ 130 µg/dscm	40 CFR § 63.1219(a)(2)
Semivolatile Metals (SVM) (Cadmium and Lead)	≤ 230 µg/dscm	40 CFR § 63.1219(a)(3)
Low Volatile Metals (LVM) (Arsenic, Beryllium, and Chromium)	≤ 92 µg/dscm	40 CFR § 63.1219(a)(4)
Carbon Monoxide	≤ 100 ppmv, dry	40 CFR § 63.1219(a)(5)(i)
Total Hydrocarbons	≤ 10 ppmv, dry	40 CFR § 63.1219(a)(5)(ii)
Hydrogen Chloride/Chlorine	≤ 32 ppmv dry, as Cl^-	40 CFR § 63.1219(a)(6)
Particulate Matter (PM)	≤ 0.013 gr/dscf	40 CFR § 63.1219(a)(7)
Destruction and Removal Efficiency (DRE)	≥ 99.99 %	40 CFR § 63.1219(c)(1)

Note: All emission concentrations are corrected to 7% oxygen.

4.2 Test Condition

The testing is designed to demonstrate compliance with targeted HWC MACT emissions standards while establishing OPLs required in association with the targeted standard, or standards. There will be one test condition conducted on each of the three incinerators – Units 2, 3, and 4, and one set of OPLs will be established for each unit. In the first part of each test run for each unit, compliance will be demonstrated with the emission standard for PM, and the OPLs required in association with the emission standard for PM will be developed. In the second part of each test run for each unit, compliance will be demonstrated with the emission standards for HCl/Cl_2, dioxins/furans, LVM, SVM, mercury, and THC, and the OPLs required in association with these emission standards will be developed. There will be three test runs performed at the one test condition for all three units. Section 4.8 and Table 4-8 present an anticipated daily schedule for the conduct of the subsequent CPT of each of the three units.

4.2.1 Test Condition for Units 2 and 3

While the objectives for the subsequent CPTs of all three units are the same, the test for Units 2 and 3 is slightly different than for Unit 4.

4.2.1.1 Maximum Feedrate of Ash

This part of the CPT is designed to demonstrate compliance with the emission limit and to establish OPLs for the Final Replacement Standards of the HWC MACT for PM.

Units 2 and 3 will be operated at normal combustion zone temperatures with normal waste feedrates. The flue gas flowrate and the ash feedrate will be maximized. The target waste and component feedrates and operating conditionsfor this portionof the CPT are summarized in Table 4-2 and the proposed operating limits are summarized in Table 4-4. OPLs for the following will be established in this part of the test:

- Maximum Feedrate of Ash; and
- Maximum Stack Gas Flowrate.

Table 4-2 presentsthe waste feeds and spiked feed materials that are planned to be fed during the testing along with anticipated feedrates for each. In the event that selected waste feed materials contain an appreciable quantity of ash andchlorine, the ashor chlorine spiking rates may be adjusted to achieve the overall desired feedrate.

Sampling for this portion of the test includes:

- Stack – PM;
- Stack – CO, O_2;
- Chlorine Spiking Material; and
- Waste Feeds – Ash, Chlorine, Moisture, Heating Value, and Density and Viscosity (Liquids).

The OPLs associated with the emission standards for PM will be developed from this portion of the test using process data collected during the collection of the Method 5 sampling train.

Table 4-2. Target Feedrates and Operating Conditions for Units 2 and 3

Parameter	Units	Expected Feedrate or Operating Condition to be Demonstrated During the CPT
Pumpable Waste Feed	lb/hr	3,150 - 4,000
Solids Waste Feed	lb/hr	600 – 1,100
Total Waste Feed	lb/hr	3,750 – 5,000
Stack Gas Flowrate	acfm	14,500 – 17,000
Temperature in the Primary Combustion Chamber	°F	1,650 – 1,750
Temperature in the Secondary Combustion Chamber	°F	1,800 – 1,900
Lead Spike[1]	lb/hr	60 - 65
SemiVolatile Metals Feedrate	lb/hr	60 -65
Chromium Spike[1]	lb/hr	40 - 45
Pumpable Low Volatility Metals Feedrate	lb/hr	40 - 45
Total Low Volatility Metals Feedrate	lb/hr	40 - 45
Mercury Spike[1]	lb/hr	0.001 – 0.003
Mercury Feedrate	lb/hr	0.001 – 0.003
Chlorine Spike[1]	lb/hr	200 - 250
Chlorine Feedrate	lb/hr	200 - 250
Ash Feedrate	lb/hr	500 - 700
Fabric Filter Inlet Temperature	°F	390 - 425
Sorbent Feedrate	lb/lb Cl_2	1.25 – 2.0
Carrier Fluid Flowrate	gal/lb Cl_2	1.4 – 2.0

[1] Rates may be modified based on concentrations in the native waste fed during the CPT.

4.2.1.2 Maximum Feedrate of Metals and Chlorine, Maximum Waste Feedrates

This part of the test is designed to demonstrate compliance with the emission limits and to establish OPLs for the Final Replacement Standards of the HWC MACT for HCl/Cl_2, LVM, SVM, mercury, dioxins/furans, and THC.

Units 2 and 3 will be operated at maximum hazardous waste feedrates and normal combustion zone temperatures. Although Veolia will be establishing a minimum PCC temperature during this part of the test, the incinerator will be operated at normal temperatures, which will be higher than the current minimum PCC temperature OPL, and will use the average temperature of the runs to establish the new PCC temperature OPL. The feedrates of SVM, LVM, and Hg will be maximized, and the flue gas flowrate and chlorine feedrate will be maximized. The baghouse inlet temperature will be maximized. The feedrate of ash will be at normal (or higher) levels.The target feedrates and operatingconditions for Units 2 and 3 for this portion of the CPT are summarized in Table 4-2 and the proposed operating limits are summarized in Table 4-4. OPLs for the following will be established in this part of the test:

- Maximum Pumpable Hazardous Waste Feedrate;
- Maximum Total Hazardous Waste Feedrate;
- Minimum PCC Temperature;
- Minimum SCC Temperature;
- Maximum Stack Gas Flowrate;
- Maximum Feedrate of Pumpable LVM;
- Maximum Feedrate of Total LVM;
- Maximum Feedrate of SVM;
- Maximum Feedrate of Mercury;
- Maximum Feedrate of Chlorine;
- Minimum Sorbent Flowrate to the SDA;
- Minimum Carrier Fluid Flowrate to the SDA;
- Maximum Baghouse Inlet Temperature.

Table 4-2 presents the waste feeds and spiked feed materials that are planned to be fed during the testing along with anticipated feedrates for each. In the event that selected waste feed materials contain an appreciable quantity of chlorine, LVM, SVM, or mercury, the metals or chlorine spiking rates may be adjusted to achieve the overall desired feedrate.

Sampling for this portion of the test includes:

- Stack – Dioxins/Furans;
- Stack – LVM, SVM, and Hg;
- Stack – CO, O_2;
- Stack – THC;
- Stack – HCl/Cl_2;
- Cr, Pb, Hg, and Chlorine Spiking Materials; and
- Waste Feeds – Metals (LVM – As, Be, Cr; SVM – Pb, Cd; Hg), Ash, Chlorine, Moisture, Heating Value, and Density and Viscosity (Liquids);

Operation of Units 2 and 3 will remain consistent throughout the collection of the Modified Method 26A (proposed and approved by EPA Region 5), Method 29 and Method 0023A sampling trains. The OPLs associated with the emission standards for HCl/Cl_2, LVM, SVM, Hg, dioxins/furans, and THC will be developed using process data gathered during the collection of the respective Modified Method 26A, Method 29 and Method 0023A sampling trains. The second part of the test is expected to be completed with the completion of sampling

of the Method 0023A sampling train. The Method 0023A sampling train is the longer running sampling train, and should be the last one completed.

4.2.2 Test Condition for Unit 4

Following is a description of the test condition for Unit 4.

4.2.2.1 Maximum Feedrate of Ash

This part of the CPT is designed to demonstrate compliance with the emission limit and to establish OPLs for the Final Replacement Standards of the HWC MACT for PM.

Unit 4 will be operated at normal combustion zone temperatures with normal waste feedrates. The flue gas flowrate and the ash feedrate will be maximized. The target waste and component feedrates and operating conditionsfor this portionof the CPTfor Unit 4are summarized in Table 4-3 and the proposed operating limits are summarized in Table 4-5. Target operating conditions for this portion of the test are:

- Maximum Feedrate of Ash; and
- Maximum Stack Gas Flowrate;

Table 4-3 presentsthe waste feeds and spiked feed materials that are planned to be fed during the testing along with anticipated feedrates for each. In the event that selected waste feed materials contain an appreciable quantity of ash andchlorine, the ashor chlorine spiking rates may be adjusted to achieve the overall desired feedrate.

Sampling for this portion of the test includes:

- Stack – PM;
- Stack – CO, O_2;
- Chlorine Spiking Material; and
- Waste Feeds – Ash, Chlorine, Moisture, Heating Value, and Density and Viscosity (Liquids).

The OPLs associated with the emission standard for PM will be developed from this portion of the test using process data collected during the collection of the Method 5 sampling train.

Table 4-3. Target Feedrates and Operating Conditions for Unit 4

Parameter	Units	Expected Feedrate or Operating Condition to be Demonstrated During the CPT
Pumpable Waste Feed to the Primary Combustion Chamber	lb/hr	3,000 - 4,000
Pumpable Waste Feed to the Secondary Combustion Chamber	lb/hr	800 – 1,500
Solids Waste Feed	lb/hr	7,500 – 10,000
Total Waste Feed to the Primary Combustion Chamber	lb/hr	12,000 – 15,000
Total Waste Feed to the Secondary Combustion Chamber	lb/hr	800 1,500
Stack Gas Flowrate	Acfm	35,000 – 40,000
Temperature in the Primary Combustion Chamber	°F	1,500 – 1,700
Temperature in the Secondary Combustion Chamber	°F	1,800 – 1,900
Lead Spike[1]	lb/hr	60 - 65
SemiVolatile Metals Feedrate	lb/hr	60 -65
Chromium Spike[1]	lb/hr	40 - 45
Pumpable Low Volatility Metals Feedrate	lb/hr	40 - 45
Total Low Volatility Metals Feedrate	lb/hr	40 - 45
Mercury Spike[1]	lb/hr	0.02 – 0.06
Mercury Feedrate	lb/hr	0.02 – 0.06
Chlorine Spike[1]	lb/hr	200 - 250
Chlorine Feedrate	lb/hr	200 - 250
Ash Feedrate	lb/hr	5,500 – 6,500
Fabric Filter Inlet Temperature	°F	390 - 425
Carbon Injection Feedrate	lb/hr	6 - 8
Sorbent Feedrate	lb/lb Cl_2	2.0 – 2.5
Carrier Fluid Flowrate	gal/lb Cl_2	3.0 – 3.5

[1] Rates may be modified based on concentrations in the native waste fed during the CPT.

Table 4-4. HWC MACT OPLS to be Established During the ComprehensivePerformanceTest for Units 2 and 3

Process Parameter	Units	Averaging Period	How Limit Established	Expected Limit
Maximum Pumpable Waste Feed	lb/hr	1-hr	Average of maximum HRAs for each run	3,150 – 4,000
Maximum Total Waste Feed	lb/hr	1-hr	Average of maximum HRAs for each run	3,750 – 5,000
Maximum Flue Gas Flowrate	acfm	1-hr	Average of maximum HRAs for each run	14,500 – 17,000
Minimum Temperature in the Primary Combustion Chamber	°F	1-hr	Average of the test run averages	1,650 – 1,750
Minimum Temperature in the Secondary Combustion Chamber	°F	1-hr	Average of the test run averages	1,800 – 1,900
Maximum Total Low Volatility Metals (LVM) Feedrate	lb/hr	12-hr	Average of the average HRAs for each run	40 – 45
Maximum Pumpable LVM Feedrate	lb/hr	12-hr	Average of the average HRAs for each run	40 – 45
Maximum Semivolatile Metals (SVM) Feedrate	lb/hr	12-hr	Average of the average HRAs for each run	60 – 65
Maximum Total Mercury Feedrate	lb/hr	12-hr	Average of the test run averages	0.001 – 0.003
Maximum Chlorine/Chloride Feedrate	lb/hr	12-hr	Average of the test run averages	200 – 250
Maximum Ash Feedrate	lb/hr	12-hr	Average of the average HRAs for each run	500 – 700
Maximum Fabric Filter Inlet Temperature	°F	1-hr	Average of the test run averages	390 – 425
Minimum Sorbent Feedrate	lb/lb Cl_2	1-hr	Average of the test run averages	1.25 – 2.0
Minimum Carrier Fluid Flowrate	gal/lb Cl_2	1-hr	Average of the test run averages	1.4 – 2.0

4.2.2.2 Maximum Feedrate of Metals and Chlorine, Maximum Waste Feedrates, Minimum Carbon Feedrate

This part of the test is designed to demonstrate compliance with the emission limits and to establish OPLs for the Final Replacement Standards of the HWC MACT for HCl/Cl_2, LVM, SVM, mercury, dioxins/furans, and THC.

Unit 4 will be operated at maximum hazardous waste feedrates and normal combustion zone temperatures. Although Veolia will be establishing a minimum PCC temperature during this part of the test, the incinerator will be operated at normal temperatures, which will be higher than the current minimum PCC temperature OPL, and will use the average temperature of the runs to establish the new PCC temperature OPL. The feedrates of SVM, LVM, and Hg will be maximized, and the flue gas flowrate and chlorine feedrate will be maximized. The feedrate of carbon will be minimized, and the baghouse inlet temperature will be maximized. The feedrate of ash will be at normal (or higher) levels. The target feedrates and operating conditions for this portion of the CPT are summarized in Table 4-3 and the proposed operating limits are summarized in Table 4-5. OPLs for the following will be established in this part of the test:

- Maximum Pumpable Hazardous Waste Feedrate to the Rotary Kiln;
- Maximum Pumpable Hazardous Waste Feedrate to the SCC;
- Maximum Total Hazardous Waste Feedrate;
- Minimum Rotary Kiln Temperature;
- Minimum SCC Temperature;
- Maximum Stack Gas Flowrate;
- Maximum Feedrate of Pumpable LVM;
- Maximum Feedrate of Total LVM;
- Maximum Feedrate of SVM;
- Maximum Feedrate of Mercury;
- Maximum Feedrate of Chlorine;
- Minimum Carbon Feedrate;
- Minimum Sorbent Flowrate to the SDA;
- Minimum Carrier Fluid Flowrate to the SDA; and.
- Maximum Baghouse Inlet Temperature.

Table 4-3 presents the waste feeds and spiked feed materials that are planned to be fed during the testing along with anticipated feedrates for each. In the event that selected waste feed materials contain an appreciable quantity of chlorine, LVM, SVM, or mercury, the metals or chlorine spiking rates may be adjusted to achieve the overall desired feedrate.

Sampling for this portion of the test includes:

- Stack – Dioxins/Furans;
- Stack – LVM, SVM, and Hg;
- Stack – CO, O_2;
- Stack – THC;
- Stack – HCl/Cl_2;
- Cr, Pb, Hg, and Chlorine Spiking Materials; and
- Waste Feeds – Metals (LVM – As, Be, Cr; SVM – Pb, Cd; Hg), Ash, Chlorine, Moisture, Heating Value, and Density and Viscosity (Liquids).

Operation of Unit 4 will remain consistent throughout the collection of the Modified Method 26A (proposed and approved by EPA Region 5), Method 29 and Method 0023A sampling trains. The OPLs associated with the emission standards for HCl/Cl_2, LVM, SVM, Hg, dioxins/furans, and THC will be developed using process data gathered during the collection of the respective Modified Method 26A, Method 29 and Method 0023A sampling trains. The second part of the test is expected to be completed with the completion of sampling of the Method 0023A sampling train. The Method 0023A sampling train is the longer running sampling train, and should be the last one completed.

Table 4-5. HWC MACT OPLS to be Established During the Comprehensive Performance Test for Unit 4

Process Parameter	Units	Averaging Period	How Limit Established	Expected Limit
Maximum Pumpable Waste Feed to the Primary Combustion Chamber	lb/hr	1-hr	Average of maximum HRAs for each run	3,000 – 4,000
Maximum Pumpable Waste Feed to the Secondary Combustion Chamber	lb/hr	1-hr	Average of maximum HRAs for each run	800 – 1,500
Maximum Total Waste Feed to the Primary Combustion Chamber	lb/hr	1-hr	Average of maximum HRAs for each run	12,000 – 15,000
Maximum Total Waste Feed to the Secondary Combustion Chamber	lb/hr	1-hr	Average of maximum HRAs for each run	800 -1,500
Maximum Flue Gas Flowrate	acfm	1-hr	Average of maximum HRAs for each run	35,000 – 40,000
Minimum Temperature in the Primary Combustion Chamber	°F	1-hr	Average of the test run averages	1,500 – 1,700
Minimum Temperature in the Secondary Combustion Chamber	°F	1-hr	Average of the test run averages	1,800 – 1,900
Maximum Total Low Volatility Metals (LVM) Feedrate	lb/hr	12-hr	Average of the average HRAs for each run	40 – 45
Maximum Pumpable LVM Feedrate	lb/hr	12-hr	Average of the average HRAs for each run	40 – 45
Maximum Semivolatile Metals (SVM) Feedrate	lb/hr	12-hr	Average of the average HRAs for each run	60 – 65
Maximum Total Mercury Feedrate	lb/hr	12-hr	Average of the test run averages	0.02 – 0.06
Maximum Chlorine/Chloride Feedrate	lb/hr	12-hr	Average of the test run averages	200 – 250
Maximum Ash Feedrate	lb/hr	12-hr	Average of the average HRAs for each run	5,500 – 6,500
Maximum Fabric Filter Inlet Temperature	°F	1-hr	Average of the test run averages	390 – 435
Minimum Carbon Feedrate	lb/hr	1-hr	Average of the test run averages	6 – 8
Minimum Sorbent Feedrate	lb/lb Cl_2	1-hr	Average of the test run averages	2.0 – 2.5
Minimum Carrier Fluid Flowrate	gal/lb Cl_2	1-hr	Average of the test run averages	3.0 – 3.5

4.3 Establishing Operating Parameter Limits

An objective of the subsequent CPT for the Final Replacement Standards is to establish limits for a number of operating parameters while simultaneously demonstrating compliance with the performance standards and emission limits of the HWC MACT. Operating parameter limits established as required by the HWC MACT from the results of the CPT will limit emissions of the regulated parameters, and will ensure compliance with these standards during future operations. Table 4-6 identifies each emission standard and the operating parameter to be monitored to ensure future compliance. The HWC MACT requires operating parameters be established. The operating limit is set as the average of the three runs during the applicable portion of the CPT, as appropriate per manufacturer specification, or by rule.

Table 4-6. Emission Standards versus Operating Parameters

Emission Standard	Operating Parameter
Carbon Monoxide	Stack CO CEMS concentration
Dioxins/Furans	PCC temperature SCC temperature Flue gas flowrate Total waste feedrate Pumpable waste feedrate Baghouse inlet temperature Carbon feedrate (Unit 4 only)
DRE	PCC temperature SCC temperature Flue gas flowrate Total waste feedrate Pumpable waste feedrate
Total Hydrocarbons (THC)	PCC temperature SCC temperature Flue gas flowrate Total waste feedrate Pumpable waste feedrate
Mercury	Mercury feedrate Carbon feedrate (Unit 4 only)
Particulate Matter	Flue gas flowrate Ash feedrate
Semivolatile Metals Low Volatility Metals	Flue gas flowrate SVM feedrate LVM feedrate (total and pumpable) Total chlorine and chloride feedrate Baghouse inlet temperature
HCl/Cl_2	Flue gas flowrate Total chlorine and chloride feedrate Sorbent feedrate Carrier fluid flowrate

4.4 Waste Selection

Veolia proposes to feed a mix of wastes to each incinerator that is representative of typical operations of the respective incinerators. During the Comprehensive Performance Tests, the actual waste feed streams and target feedrates during the tests will be established based on actual inventory of the waste streams at the time of testing. Veolia will provide EPA with waste profiles and chemical compositions of the anticipated wastes to be burned during the CPTs about one month prior to testing. Note that waste streams may be added or removed from this packet by test time. The test report will include the waste profiles fed during the testing with the analytical results for the samples obtained during tests for heating value, ash, SVM, LVM, mercury, and total chlorine.

4.5 Waste Feed Spiking

In order to demonstrate the required performance criteria for this program, it will be necessary to spike the incinerator feeds with select organic and inorganic constituents. The spiking levels and approach proposed for the CPT have been used successfully in the past for testing at not only Veolia, but for testing at other hazardous waste combustion facilities as well.

Each spiked material will be prepared to a known specification and verified by a certificate of analysis. These materials will be prepared and fed in a manner that assures a very consistent feedrate. Feedrates of each spiked compound are to be well above expected levels in native wastes such that the spiked constituent is expected to be the dominant feed of the selected parameter. Waste feeds will be sampled during the test and analyzed. The amounts of the selected parameters in the waste streams will contribute to the OPI for the waste feedrate of that constituent. Spiking rates are also selected based on historical performance to assure that emissions can be detected and actual results, versus non-detect results, are used in the calculation of system removal efficiencies (SREs) (see Table 4-7).

Quality assurance requirements to confirm the concentrations of the target parameter in the spiking materials are presented in Section 9.2.6. A Standard Operating Procedure (SOP) for the preparation of the spiking materials is attached as Appendix B. Veolia will prepare the spiking materials in accordance with Appendix B for purposes of this CPT Plan.

A more detailed description of the spike preparation procedure will be made available for EPA when the spike materials are prepared. This updated document will include, among other things, the certificates of analysis for the spike material, the scale and balance certifications, mass and concentrations of spike materials, and amount of nitric acid added to the mercury spike solution. The final version of this document will be included in the test report. It will also include, among other things, the lab preparation log sheets, spike preparation log sheets, and the incineration charge sheets.

4.5.1 Inorganic Constituents

Several metals will be spiked to the system to establish OPLs for the select constituents and calculate SREs. Regulated metals may be fed at some level in the native waste materials to be used during the test. However, these native concentrations may not be high enough to achieve the desired feedrate limits to be set for the system. Therefore, during the metals portion of the CPTs, Veolia plans to spike three surrogate metals at higher than normal rates to ensure that sufficient metals are fed to achieve measurable emissions in the stack emissions.

Table 4-7 provides an overall summary of information relevant to the metals emissions testing. This table shows that at conservative method detection limits for the stack sampling method that will be used to measure metals in the stack gas (i.e., EPA Method 29) and the spiking rates of these metals, a SRE can be calculated greater than SRE measured in previous test programs of the respective units. These calculations show that the metals spiking rates will result in measurable concentrations and emission rates. This table is only used as a predictive tool, and OPLs will be developed using actual results of the CPT. Two other points are worth noting with regard to Table 4-7:

- The spiked amount for a given metal will be the difference between the desired feedrate limit and the native quantity expected to be fed during the test; and
- Surrogate metals will represent the whole group (in the case of LVM and SVM) and test results for the spiked of these two metals categories will be used to extrapolate to the OPL for the metal feedrate.

The three metals to be spiked are representative of the three classes of metal volatility of the HWC MACT, and therefore can be used to set limits for the HWC MACT metals not spiked.

4.5.2 Spiking for the LVM Category

The LVM category for incinerators includes arsenic, beryllium and chromium. Veolia plans to spike chromium at 40 - 45 lb/hr during the metals tests of all three units. The SRE demonstrated during the respective CPTs for chromium will be used to establish the feedrate limits for total and pumpable LVM for that unit, using extrapolation (see Section 4.6 of the CPT Plans)

Chromium will be spiked as chromic acid (unless another compound of chromium is used, based on availability, and approved by U.S. EPA Region 5) through a liquid feed injector via a pumping station that will monitor the feedrate. Waste chromic acid is treated at Veolia and thus, spiking chromic acid during the CPT is representative of normal operations.

Table 4-7. Metals Evaluation Plan

	Lead	Chromium	Mercury
Detection Limit (µg)	0.45 (0.2+0.25)[1]	0.50 (0.25+0.25)[1]	1.79 (0.14+0.87+0.085+0.47+0.22)[2]
Sample Volume Collected (dscf)	45	45	45
Stack Detection Limit (µg/m^3)	0.35	0.39	1.40
Stack Flowrate (acfm / dscfm at 12% O_2)	15,147 / 5,733 – Unit 2	15,147 / 5,733 – Unit 2	15,147 / 5,733 – Unit 2
Emission Rate at Detection Limit (lb/hr)	7.6×10^{-6} – Unit 2 7.6×10^{-6} – Unit 3 2.0×10^{-5} – Unit 4	8.5×10^{-6} – Unit 2 8.5×10^{-6} – Unit 3 2.2×10^{-5} – Unit 4	3.0×10^{-5} – Unit 2 3.0×10^{-5} – Unit 3 7.9×10^{-5} – Unit 4
Target Spiking Rate (lb/hr)	60 – 65	40 – 45	0.001 – 0.003 – Units 2 and 3 0.02 – 0.06 – Unit 4
SRE at Detection Limit (%) [3]	99.999238 – Unit 2 99.999238 – Unit 3 99.998027 – Unit 4	99.999151 – Unit 2 99.999151 – Unit 3 99.997802 – Unit 4	99.996952 – Unit 2 99.996952 – Unit 3 99.992110 – Unit 4
Historical SRE (%) [4]	99.999519 – Unit 2 99.998714 – Unit 3 99.998241 – Unit 4	99.999808 – Unit 2 99.999360 – Unit 3 99.999187 – Unit 2	55.77 – Unit 2 55.06 – Unit 3 95.38 – Unit 4
Stack Gas Concentration at Expected SRE and Mid-Range of Target Spiking Rate (µg/m^3 at 7% O_2)	21 – Unit 2 57 – Unit 3 30 – Unit 4	5.8 – Unit 2 19 – Unit 3 9.5 – Unit 4	63 – Unit 2 64 – Unit 3 51 – Unit 4

[1] Detection Limit in Probe and Nozzle Rinse + Acidic Peroxide Impingers of EPA Method 29.

[2] Detection Limit in Probe and Nozzle Rinse + Acidic Peroxide Impingers + Empty Impinger + Acidic Permanganate Impinger + HCl Rinse of EPA Method 29.

[3] Based on the low end target spiking rate .

[4] This SRE is an average of the results from the August/September 2008 test programs.

4.5.3 Spiking for the SVM Category

The SVM category for incinerators includes cadmium and lead. Veolia plans to spike lead at 60 - 65 lb/hr during the CPTs of all three units to establish a SRE. The SRE demonstrated during the respective CPTs for lead will be used to establish a SVM feedrate limit for that unit, using extrapolation (see Section 4.6 of the CPT Plans.)

Lead will be spiked as lead nitrate (unless another compound of lead is used, based on availability, and approved by U.S. EPA Region 5) and fed to the incinerators in small, pre-measured plastic baggies at regular intervals along with other solid waste feeds during the performance test. Lead-containing wastes that are normally treated at Veolia are predominantly bulk or containerized solids and thus, this spiking approach during the CPT is representative of normal operations.

4.5.4 Spiking for Mercury

Mercury is the only high volatility metal of the HWC MACT. Veolia plans to spike mercury at approximately 0.001 – 0.003 lb/hr during the test of the CPTs of Units 2 and 3 for metals, and approximately 0.02 – 0.06 lb/hr during the test of the CPT of Unit 4 for metals. The SRE demonstrated during the respective CPTs for mercury will be used to establish a mercury feedrate limit for that unit, using extrapolation (see Section 4.6 of the CPT Plans)

Mercury will be fed as a mercuric nitrate solution (unless another compound of mercury is used, based on availability, and approved by U.S. EPA Region 5) contained in vials fed with solids to the incinerator, and will be fed placing a vial in solids fed to the incinerator at regular intervals during the performance test. Mercury is predominantly present in solid feeds processed at Veolia and using a liquid solution for spiking will provide an easily volatilized form fed along with other solid feeds in a manner that is representative of normal operations.

4.5.5 Spiking for Chlorine Loading

Pursuant to 40 CFR §63.1209(n)(4) and 40 CFR §63.1209(o)(1), Veolia will be establishing a maximum total chlorine and chloride feedrate during the CPT. The maximum chlorine feedrate is an OPL to be established in association with the HWC MACT standards for LVM and SVM, and HCl/Cl_2. In addition to the chlorine being fed to the incinerators from the native wastes, chlorine feed to the incinerators will be supplemented during the second part of the test, that includes testing for HCl/Cl_2 SVM, LVM, mercury, and dioxins/furans by the spiking of hexachloroethane and/or PVC (unless another chlorinated compound is used, based on availability, and approved by US. EPA Region 5) The hexachloroethane and/or PVC will be delivered in small, pre-measured plastic baggies at regular intervals along with other solid waste feeds during the performance test. The spiking will be adjusted based on the total chlorine/chloride content of the native wastes.

Although Veolia believes that the native wastes will contain sufficient chlorine content to comply with the requirement in 40 CFR §63.1207(g)(1)(A) for feeding normal (or higher) levels of chlorine during the test for dioxins/furans, chlorine will be spiked throughout the dioxins/furans testing and the second part of the test to provide a consistent feedrate of chlorine throughout the dioxins/furans sampling. The average feedrate of chlorine from December 2012 through May 2013 was 35 lb/hr for Unit 2, 31 lb/hr for Unit 3; and 82 lb/hr for Unit 4.

4.5.6 Spiking for Ash Loading

Pursuant to 40 CFR §63.1209(m)(3), Veolia will be establishing a maximum ash feedrate during the CPTs. The maximum ash feedrate is an OPL to be established in association with the HWC MACT standard for PM. In addition to the ash being fed to the incinerators from the native wastes, the ash feedrate to the incinerators may be supplemented during the PM portion of the CPT if the ash contents of the wastes do not contain a sufficient ash content to meet the targeted feedrate.

Veolia believes that the native wastes will contain sufficient ash content to comply with the requirement in 40 CFR §63.1207 (g) (1)(B) for feeding normal (or higher) levels of ash during the SVM and LVM performance tests. If the native wastes that are going to be fed during the testing do not contain a sufficient ash content to meet this requirement, Veolia may need to spike a high ash material into the solids feeds. The average feedrate of ash from December 2012 through May 2013 was 102 lb/hr for Unit 2; 109 lb/hr for Unit 3; and 949 lb/hr for Unit 4.

4.6 Testing During Cleaning Cycles

40 CFR 63.1207(g)(1)(i)(C) requires that tests for PM, SVM, LVM, mercury, and dioxins/furans include a normal cleaning cycle of the PM control device. The baghouse is the unit of the air pollution control train that is designed and operated to control particulate matter. Testing for PM, SVM, LVM, mercury, and dioxins/furans will be performed during a cleaning cycle of the fabric filter (i.e., baghouse). Testing in all three runs of all tests conducted will include a cleaning cycle of the baghouse.

As discussed in Section 2.5.1 of this plan, jets of air are used to clean the filter bags of the baghouse. Periodically, the cleaning sequence is initiated, either at the end of a 4-hour timed cycle, when the differential pressure across the filter reaches a predetermined setpoint of approximately 7.0" w.c., or when the operator initiates a cycle. Veolia will ensure that the baghouse undergoes a cleaning cycle during each run of the CPT.

4.7 Conditioning Time Needed to Reach Steady State

Since there are no recirculating scrubber flows (the lime slurry to the spray dryer is once-through), the conditioning time prior to sampling for the Veolia units is governed primarily by the gas residence time from the feed point to the sampling locations. This residence time is approximately 5 seconds for Units 2 and 3, and approximately 7.1 seconds for Unit 4.

The conditioning time needed to achieve steady state operation of Units 2, 3, and 4 is 30 minutes. Before sampling begins for a test run of the CPT, or a portion of the CPT, Units 2, 3, and 4 will be operated for 30 minutes at the desired feedrates and operating conditions, and spiking of waste feeds will be performed for 30 minutes. This will assure all operating parameters are stabilized at the desired settings to achieve steady state, and that the feedrates of spiking materials have stabilized, before sampling begins.

4.8 Anticipated Test Schedule

The subsequent CPT of each of the three incinerators will be performed at one test condition (i.e., one mode of operation), and one set of OPLs will be developed for each unit. There are two portions to the test condition. In the first part of the test, Veolia will demonstrate compliance with the particulate matter standard of the HWC MACT while the plant is operating to establish the maximum ash feedrate and maximum combustion gas flowrate OPLs as required by the HWC MACT for the particulate matter standard. In the second part of the test, Veolia will demonstrate compliance, and develop OPLs, with the HCl/Cl_2 , LVM, SVM, mercury, dioxins/furans, THC, and CO standards of the HWC MACT while the plant is operating to establish maximum total hazardous waste feedrate, maximum pumpable hazardous waste feedrate, minimum primary combustion chamber (PCC) temperature, minimum secondary combustion chamber (SCC) temperature, maximum LVM, SVM, and Hg feedrates, maximum chlorine feedrate, maximum combustion gas flowrate, and maximum inlet temperature to the baghouse.

Both parts of the test condition will include three test runs, or test periods. An individual run of the CPT will be performed over three successive days with the testing for the two portions of the single test condition performed back-to-back on each of the three days. For the first part of the test, target operating conditions (i.e., normal waste feedrates, maximum ash feedrate, and maximum stack gas flowrate) will be established and maintained. Once steady-state operations have been achieved, stack testing for PM will begin along with the sampling of waste feeds. The sampling time of a Method 5 run for PM will be one hour. It is anticipated that a Method 5 run for PM will require approximately one and one-half to two hours to complete. The amount of time needed to complete stack sampling for PM will detemine the length of the first part of the test condition. The collection of samples of the waste feeds will be coordinated with the Method 5 stack

sampling for PM (i.e., with the first sample collected at the beginning, at port change, and then samples collected every 15 minutes until the completion of the Method 5 stack sampling).

Following completion of testing for the first part of the test, the operation of Unit 2, 3, or 4 will be adjusted to the target operating conditions for the second portion of the test condition (i.e., maximum waste feedrates, normal temperatures in the PCC and SCC, maximum LVM, SVM, and Hg feedrates, maximum chlorine feedrate, maximum stack gas flowrate, normal or higher ash feedrate, and minimum sorbent and carrier fluid flowrates to the SDA – and minimum carbon feedrate for Unit 4). Steady-state operation will be established and maintained, and Cr, Pb, Hg, and chlorine will be spiked for 30 minutes prior to the start of testing. Once steady-state operations have been achieved, stack testing for HCl/Cl_2 using a Modified Method 26A, LVM, SVM, and Hg using Method 29, dioxins/furans using Method 0023A, and THC using a continuous analyzer will begin concurrently along with sampling of waste feeds and the spiking materials. The sampling time of a Modified Method 26A run for HCl/Cl_2 will be one hour. Since the Modified Method 26A probe will not be moved during its sampling, a Modified Method 26A run for HCl/Cl_2 will be completed in one hour. The sampling time of a Method 29 run for LVM, SVM, and Hg will be two hours. It is anticipated that a Method 29 run for metals will require approximately two and one-half to three hours to complete. The sampling time of a Method 0023A run for dioxins/furans will be three hours, and the amount of time to complete a Method 0023A run for dioxins/furans is expected to be approximately three and one-half to four hours.

The collection of samples of the waste feeds will be coordinated with the Modified Method 26A, Method 29 and Method 0023A stack sampling trains for HCl/Cl_2, metals, and dioxins/furans, respectively (i.e., with the first sample collected at the beginning, and then samples collected every 15 minutes until the completion of the Method 0023A stack sampling). Composites of waste feeds will be collected and/or prepared for the periods of time over which the Modified Method 26A, Method 29 and Method 0023A stack sampling trains were collected.

The incinerators will be spiked with Cr, Pb, Hg, and chlorine throughout the second part of the test beginning with the concurrent start of the Modified Method 26A, Method 29 and Method 0023A stack sampling trains through the completion of the stack sampling ending with the completion of the Method 0023A sampling train. While spiking of Cr, Pb, Hg, and chlorine will continue

throughout the second portion of the test, sampling of the spiking materials for Cr, Pb, Hg, and chlorine will be coordinated with the Method 29 stack sampling for LVM, SVM, and Hg (i.e., at the beginning, at port change, and at completion of stack sampling). The three individual samples of the liquid spiking solutions of Cr and Hg will be analyzed. The individual samples of the solid spiking materials for Pb and chlorine will be archived (i.e. not analyzed unless results or data indicate the need for analysis). A fourth set of samples of the Cr, Pb, Hg, and chlorine spiking solutions and materials will be collected at the completion of the Method 0023A sampling train for dioxins/furans. This fourth sample of the spiking solutions and materials will be archived. Archived samples will be retained for 90 days.

Table 4-8 presents a schedule for the conduct of the subsequent CPT of Units 2, 3, and 4. The sequence for the performance of the CPT of Units 2, 3, and 4 has not been established.

In August and September of 2008, Veolia conducted tests of Units 2, 3, and 4 required by the information collection requests from U.S. EPA Region 5 dated June 5, 2008 and September 12, 2008. These tests were designed to demonstrate compliance with the applicable emission standards of the HWC MACT for metals, and began on August 11, 2008 for Unit 2, August 5, 2008 for Unit 3, and August 21, 2008 for Unit 4. The initial Comprehensive Performance Tests of Units 2, 3, and 4 commenced on December 8, 2009 for Unit 2; on December 1, 2009 for Unit 3; and on December 16, 2009 for Unit 4. The HWC MACT, at 40 CFR § 63.1207(d), states "*The date of commencement of the initial comprehensive performance test is the basis for establishing the deadline to commence the initial confirmatory performance test and the next comprehensive performance test. You may conduct performance testing at any time prior to the required date. The deadline for commencing subsequent confirmatory and comprehensive performance testing is based on the date of commencement of the previous comprehensive performance test.*" Veolia Sauget understands that U.S. EPA Region 5's position regarding commencement of the subsequent CPTs is based on the initiation of the metals tests performed in 2008, stating in a letter dated August 3, 2012—Veolia must submit to EPA a notification of intent to conduct a CPT and a site-specific test plan for the CPT at least one year before the performance test. 40 CFR § 63.1207(e)(1)(i)…by September 5, 2012||. Veolia submitted to EPA its notification of intent and site-specific test plans and QAPjP for the subsequent CPT of Units 2, 3, and 4 on September 5, 2012.

Table 4-8. Daily Schedule for the Subsequent CPT of Units 2, 3, and 4

Day	Start	Stop	Activity
1	8:00	17:00	On-Site Mobilization
2	6:00	8:00	Unit Line Out – Run 1, First Part of the Test Condition
	8:00	10:00	Run 1, First Part of the Test Condition - Stack Testing for PM - Waste Feed Sampling (Samples Collected Every 15 Minutes; Composited and Individual) ■ First Sample at Start of PM Sampling ■ Last Sample Prior to, or at, Completion of PM Sampling - Chlorine Spike Sampling (3 Samples Archived) ■ Taken from the Solid Waste Feed Container Collected at the Beginning, Mid-Point, and Completion of PM Sampling Train
	10:00	11:00	Unit Line Out, Second Part of the Test Condition
	10:30		Begin Spiking of Chromium, Lead, Mercury, and Chlorine
	11:00	15:00	Run 1, Second Part of the Test Condition - Stack Testing for HCl-Cl_2 (Modified Method 26A), LVM, SVM, and Hg (Method 29), and Dioxins/Furans (Method 0023A) – All Stack Sampling Trains Start Concurrently - Waste Feed Sampling (Samples Collected Every 15 Minutes; Composited and Individual) ■ First Sample at Start of HCl-Cl_2, Metals, and Dioxins/Furans Sampling ■ Composite Waste Feed Samples Prepared Over Respective HCl-Cl_2, Metals, and Dioxins/Furans Sampling ■ Last Sample for Composites Collected Prior to, or at, Completion of Respective Sampling Trains for HCl-Cl_2, Metals, and Dioxins/Furans - Cr, Pb, Hg, Chlorine Spike Sampling (3 Cr and Hg Samples Collected and Analyzed; 1 Sample Archived – All 4 Pb and Cl Samples Archived) ■ First Sample at Start of HCl-Cl_2, Metals and Dioxins/Furans Sampling ■ Second Sample at Port Change of Metals Sampling Train ■ Third Sample at Completion of Metals Sampling ■ Fourth Sample at Completion of Dioxins/Furans Sampling (Archived)
	15:00	17:00	Sample Recovery

Table 4-8. (continued) Daily Schedule for the Subsequent CPT of Units 2, 3, and 4

Day	Start	Stop	Activity
3	6:00	8:00	Unit Line Out – Run 2, First Part of the Test Condition
	8:00	10:00	Run 2, First Part of the Test Condition - Stack Testing for PM - Waste Feed Sampling (Samples Collected Every 15 Minutes; Composited and Individual) ■ First Sample at Start of PM Sampling ■ Last Sample Prior to, or at, Completion of PM Sampling - Chlorine Spike Sampling (3 Samples Archived) ■ Taken from the Solid Waste Feed Container Collected at the Beginning, Mid-Point, and Completion of PM Sampling Train
	10:00	11:00	Unit Line Out, Second Part of the Test Condition
	10:30		Begin Spiking of Chromium, Lead, Mercury, and Chlorine
	11:00	14:00	Run 2, Second Part of the Test Condition - Stack Testing for HCl-Cl_2 (Modified Method 26A), LVM, SVM, and Hg (Method 29), and Dioxins/Furans (Method 0023A) – All Stack Sampling Trains Start Concurrently - Waste Feed Sampling (3 Samples Collected Every 15 Minutes; Composited and Individual) ■ First Sample at Start of HCl-Cl_2, Metals, and Dioxins/Furans Sampling ■ Composite Waste Feed Samples Prepared Over Respective HCl-Cl_2, Metals, and Dioxins/Furans Sampling ■ Last Sample for Composites Collected Prior to, or at, Completion of Respective Sampling Trains for HCl-Cl_2, Metals, and Dioxins/Furans - Cr, Pb, Hg and Chlorine Spike Sampling (3 Cr and Hg Samples Collected and Analyzed; 1 Sample Archived – All 4 Pb and Cl Samples Archived) ■ First Sample at Start of HCl-Cl_2, Metals and Dioxins/Furans Sampling ■ Second Sample at Port Change of Metals Sampling Train ■ Third Sample at Completion of Metals Sampling ■ Fourth Sample at Completion of Dioxins/Furans Sampling (Archived)
	15:00	17:00	Sample Recovery

Table 4-8. (continued) Daily Schedule for the Subsequent CPT of Units 2, 3, and 4

Day	Start	Stop	Activity
4	6:00	8:00	Unit Line Out – Run 3, First Part of the Test Condition
	8:00	10:00	Run 3, First Part of the Test Condition - Stack Testing for PM - Waste Feed Sampling (Samples Collected Every 15 Minutes; Composited and Individual) ■ First Sample at Start of PM Sampling ■ Last Sample Prior to, or at, Completion of PM Sampling - Chlorine Spike Sampling (3 Samples Archived) ■ Taken from the Solid Waste Feed Container Collected at the Beginning, Mid-Point, and Completion of PM Sampling Train
	10:00	11:00	Unit Line Out, Second Part of the Test Condition
	10:30		Begin Spiking of Chromium, Lead, Mercury, and Chlorine
	11:00	14:00	Run 3, Second Part of the Test Condition - Stack Testing for HCl-Cl_2 (Modified Method 26A), LVM, SVM, and Hg (Method 29), and Dioxins/Furans (Method 0023A) – All Stack Sampling Trains Start Concurrently - Waste Feed Sampling (3 Samples Collected Every 15 Minutes; Composited and Individual) ■ First Sample at Start of Metals, Dioxins/Furans, and HCl-Cl_2 Sampling ■ Composite Waste Feed Samples Prepared Over Respective HCl-Cl_2, Metals, and Dioxins/Furans Sampling ■ Last Sample for Composites Collected Prior to, or at, Completion of Respective Sampling Trains for HCl-Cl_2, Metals, and Dioxins/Furans - Cr, Pb, Hg, Chlorine Spike Sampling (3 Cr and Hg Samples Collected and Analyzed; 1 Sample Archived – All 4 Pb and Cl Samples Archived) ■ First Sample at Start of HCl-Cl_2, Metals and Dioxins/Furans Sampling ■ Second Sample at Port Change of Metals Sampling Train ■ Third Sample at Completion of Metals Sampling ■ Fourth Sample at Completion of Dioxins/Furans Sampling (Archived)
	15:00	17:00	Sample Recovery
5	8:00	17:00	Composite Waste Samples, Pack and Ship Samples, Demobilize, Contingency

5.0 Sampling and Monitoring Procedures

The Comprehensive Performance Test of Units 2, 3, and 4 will be performed at one test condition to demonstrate system performance and to establish appropriate permit operating limits for the metals, particulate matter, HCl/Cl_2, dioxins/furans, THC, and CO standards of the HWC MACT. The Comprehensive Performance Test will include three replicate sampling runs of the one test condition. Table 5-1 summarizes the parameters that will be measured during the CPTs and the frequency of measurement. All of the samples will be analyzed, including the field blank samples of the stack gas sampling trains. Reagent blanks will be collected, archived, and analyzed only if necessary.

In addition to the collection and analysis of emission samples, plant instrumentation will be used to continuously monitor several stack gas parameters and other process parameters including waste feedrates and air pollution control system operating parameters to produce the data to develop the OPLs. A complete listing of monitored process parameters for each unit is included in the respective CPT Plans.

Samples will be collected of the stack gas, liquid and solid waste feed streams, and spiking materials and solutions during the Comprehensive Performance Tests. Table 5-2 lists the sampling methods. Table 5-3 summarizes the emissions sampling specifications (i.e., minimum sample volume and duration). The following sections discuss these methods in more detail.

5.1 Method Modifications

A number of sampling and analytical method deviations are proposed for use during the Comprehensive Performance Tests of the incinerators. The requested sampling and analytical method deviations are practices that are routinely followed and are incorporated into the approved SOPs at URS and at the NELAC certified laboratory (Test America Knoxville). Table 5-4 presents the requested method modifications, and Test America Knoxville's or URS' current position regarding the method modifications.

These method modifications have been approved, as applicable, by the U.S. EPA Office of Air Quality Planning and Standards (OAQPS) in Research Triangle Park, NC and U.S. EPA Region 6 within the past year. OAQPS is the authority to approve intermediate modification requests, and minor method modifications can be approved at the regional level of U.S. EPA.

In addition to the method modifications presented in Table 5-4, HCl and Cl_2 will be measured in the second part of each run of the test condition for all of the three units, using a modification of the application of EPA Method 26A. EPA Method 26A calls for the isokinetic collection of the sample at traverse points across two orthogonal diameters of circular stacks, as required by EPA Method 1.The modification of EPA Method 26 A, recommended and approved by U.S. EPA Region 5, is to collect the sample isokinetically at a single point located at the center of the stack.

Table 5-1. Measurement Frequency During the CPT of Units 2, 3, and 4

Stream/Parameters	Sample Frequency for the Subsequent CPT	
	First Part	**Second Part**
Liquid Waste Feed		
Ash	3	3
Chlorine	3	3
Moisture	3	3
Heating Value	3	3
Viscosity, Density	3	3
Metals		3[1]
Solids Waste Feed – Containerized and Bulk[2]		
Ash	3	3
Chlorine	3	3
Moisture	3	3
Heating Value	3	3
Metals		3[1]
Spiking Materials[3]		
Mercury Spiking Solution		3
Lead Solid Spiking Material		3
Chromium Spiking Solution		3
Chlorine Solid Spiking Material (if spiked)		3
Stack Gas		
Metals		3[1]
Particulate Matter	3	
HCl/Cl_2		3
Dioxins/Furans	Continuous	3
CO_2, O_2		Continuous[4]
Total Hydrocarbons	Concurrent with isokinetic sampling	Continuous[4]
Moisture	Continuous	Concurrent with isokinetic sampling
CO, O_2 [5]		Continuous

[1] Analysis is for As, Be, Cd, Cr, Pb, and Hg.

[2] Bulk solids fed only to Unit 4.

[3] Each collected sample of the mercury and chromium spiking solutions will be analyzed for the target spiking metal. Samples of the lead and chlorine spiking materials will be archived.

[4] Allowing for hourly calibration of the THC monitor.

[5] Plant monitors.

Table 5-2. Sampling Methods

Stream	Sampling Method	Sampling Frequency	Compositing Approach	Analytical Parameters
Liquid Waste Feed	Tap (Method S004)	First part of the test condition Every 15 Minutes During Method 5 sampling Second part of the test condition – Every 15 Minutes During Modified Method 26A, Method 29, and Method 0023A sampling	Composite all subsamples from each test period	Ash Chlorine Moisture Heating Value Density Viscosity Metals[1]
Containerized Solid Waste Feed	Grab or Scoop (Method S007) – Solids	First part of the test condition – Every 15 Minutes During Method 5 sampling Second part of the test condition – Every 15 Minutes During Modified Method 26A, Method 29, and Method 0023A sampling	Composite all subsamples from each test period	Ash Chlorine Moisture Heating Value Metals[1]
Bulk Solid Waste Feed [2]	Grab or Scoop (Method S007) – Solids	First part of the test condition – Every 15 Minutes During Method 5 sampling Second part of the test condition – Every 15 Minutes During Modified Method 26A, Method 29, and Method 0023A sampling	Composite all subsamples from each test period	Ash Chlorine Moisture Heating Value Metals[1]
Chromium Spiking Solution	Tap (Method S004)	Second part of the test condition - Beginning, middle, and end of Method 29 sampling End of Method 0023A sampling	Analyze all subsamples collected during Method 29 sampling Archive subsample collected at end of Method 0023A sampling	Chromium
Mercury Spiking Solution	Grab	Second part of the test condition - Beginning, middle, and end of Method 29 sampling End of Method 0023A sampling	Analyze all subsamples collected during Method 29 sampling Archive subsample collected at end of Method 0023A sampling	Mercury

Table 5-2. (Continued) Sampling Methods

Stream	Sampling Method	Sampling Frequency	Compositing Approach	Analytical Parameters
Lead and Chlorine Spiking Materials	Grab	Second part of the test condition - Beginning, middle, and end of Method 29 sampling End of Method 0023A sampling	None – Archive	Archive
Stack Gas	EPA Method 2	Concurrent with isokinetic sampling for EPA Methods 5 and 29, and SW-846 Method 0023A	NR	Flowrate
	EPA Method 3A	Concurrent with isokinetic sampling – First and Second Parts of the Test	NR	O_2, CO_2
	EPA Method 4	Concurrent with isokinetic sampling – First and Second Parts of the Test	NR	Moisture
	EPA Method 5	1+ hour collected isokinetically – First Part of the Test	NR	PM
	Modified EPA Method 26A	1+ hour collected isokinetically at single point – Second Part of the Test	NR	HCl/Cl_2
	EPA Method 29	2+ hour collected isokinetically - Second Part of the Test	NR	Metals [1]
	SW-846 Method 0023A	3+ hour collected isokinetically - Second Part of the Test	NR	Dioxins/Furans
	EPA Method 25A	Concurrent with isokinetic sampling – Second Part of the Test	NR	THC
	Plant CEMS	Continuous	NR	CO, O_2

[1] Analysis is for As, Be, Cd, Cr, Pb, and Hg only in samples from the second part of the test condition.

[2] Bulk solid waste fed only to Unit 4.

NR = Not Required

Table 5-3. Emissions Sampling Specifications

Parameter	Sampling Method	Minimum Sample Size	Minimum Sampling Duration
Particulate Matter	EPA Method 5	0.85 dscm (30 dscf)	1 hour
HCl and Cl_2	Modified EPA Method 26A	0.85 dscm (30 dscf)	1 hour
Metals[1]	EPA Method 29	1.7 dscm (60 dscf)	2 hours
Dioxins/Furans	SW-846 Method 0023A	2.5 dscm (88 dscf)	3 hours
CO, O_2	Plant CEMs Certified per 40 CFR 60, App. B PS 4B	N/A[2]	Sampled Over Entire Test Run - First and Second Parts of the Test
Total Hydrocarbons	EPA Method 25A	N/A	Sampled During Second Part of the Test [3]
Flowrate	40 CFR 60, Appendix A, Method 1, 2	N/A	With All Isokinetic Methods – Except Modified Method 26A
CO_2, O_2	EPA Method 3A	N/A	Sampled Over Entire Test Run - First and Second Parts of the Test [3]
Moisture	40 CFR 60, Appendix A, Method 4	N/A	With All Isokinetic Methods

[1] Analysis is for As, Be, Cd, Cr, Pb, and Hg,.

[2] N/A – Not Applicable

[3] Allowing for hourly calibration of hydrocarbon analyzer.

Table 5-4. Method Modifications

Modification	Justification	Proposed Category
I. Metals Sampling Modifications – EPA METHOD 29		
A Teflon® transfer line will be used between the filter and the first impinger of the sampling train.	This is done to address space limitations on the stack, to allow for ease in probe moving and to minimize potential hazards moving the very large and heavy impinger box. **Additional Information** The use of a sample transfer line is authorized/discussed in EPA Method 26A, EPA Method 23 and SW-846 Method 0023A. Method 26A states that if a–flexible‖ line is used (i.e., a transfer line) it must be rinsed into the first impinger. Methods 23 and 0023A state that the transfer line must be Teflon®, and must be heated. The sample transfer lines for EPA Methods 5/26A and 29 will not be heated. The sample lines will be recovered in the fashions prescribed in the methods for the back-half of the filter holder into the container for the first impinger.	Previously Approved as Minor

Table 5-4. (continued) Method Modifications

Modification	Justification	Proposed Category
II. Metals Analysis Modifications – KNOX-MT-0006 SOP based on EPA METHOD 29		
The digestates from each fraction will be reduced to final volumes that are lower than the volumes specified in EPA Method 29. This is done to achieve lower reporting limits. The concentrations of the reagents will be maintained at the same concentrations as stated in EPA Method 29.	This is done to achieve lower reporting limit. A lower acid volume is added to a lower final volume to keep the acid concentration constant.	Previously Approved as Minor
Laboratory reagent water is used rather than ASTM Type II water.	The laboratory reagent water meets the ASTM criteria for electrical conductivity, but is not tested for all ASTM Type II criteria. The laboratory uses the term reagent water rather than ASTM Type II water since not all ASTM Type II criteria are evaluated. For example, the reagent water is not tested for Total Organic Carbon since this parameter is not tested for Total Organic Carbon since this parameter is not relevant to the analytical method.	Previously Approved as Intermediate
The initial measurement of impinger samples from nitric acid/hydrogen peroxide can be made by weighing to ± 0.5 grams or measuring volume to ± 2.5 mL (± 5 mL for large volume samples).	This information is not used by the laboratory to calculate sample results and is recorded on the laboratory benchmark and provided to the client for information only.	Previously Approved as Minor

Table 5-4. (continued) Method Modifications

Modification	Justification	Proposed Category
(continued) II. Metals Analysis Modifications – KNOX-MT-0006 SOP based on EPA METHOD 29		
The samples are not analyzed in duplicate. Instrument and method precision are measured by analyzing the LCS/LCSD.	Test America Knoxville does not require the reporting of separate duplicate analyses for mercury as specified in Section 9.2.3 of EPA Method 29. Method 29 was written allowing the use of an Atomic Absorption Spectrometer with a CVAAS attachment using a BOD bottle for sample analysis. The reference to this older style instrumentation may have required the duplicate analysis of mercury samples due to the use of BOD bottles for sample preparation and analysis. The use of automated instrumentation used for mercury analysis is referenced in section 11.1.3. Note 2. It states that–Optionally, Hg can be analyzed by using the CVAAS analysis procedures given by some instrument manufacturer's directions. Upon completion of the digestion described in (1), analyze the sample according to the instrument manufacturer's directions. This approach allows multiple (including duplicate) automated analyses of a digested sample aliquot.‖ The use of automated instrumentation allows for multiple automated analyses and processes the results of multiple readings for each sample to provide a final averaged result for mercury. For example, during a ten second period, the instrument takes a reading every 0.1 second for a total of 100 replicate measurements. The average of these replicate readings is used to determine the absorbance and resulting sample concentration. Test America Knoxville provides relevant mercury precision data for the method by performing one of the following depending on the train fraction: LCS/LCSD, MS/MSD or PDS/PDSD.	Previously Approved as Minor

Table 5-4. (continued) Method Modifications

Modification	Justification	Proposed Category
(continued) II. Metals Analysis Modifications – KNOX-MT-0006 SOP based on EPA METHOD 29		
Boric acid is added after the HF microwave digestion of the front-half samples. Hydrofluoric acid is sequestered by the addition of boric acid, protecting glassware and instrumentation.	Hydrofluoric acid is sequestered by the addition of boric acid, protecting glassware and instrumentation. Do you have any data showing that the Boric acid addition does not negatively impact the metals analysis? Yes, We have MDL data and Demonstration of capability data.	Previously Approved as Intermediate
The aliquot for mercury analysis of the nitric acid/hydrogen peroxide impingers is taken from the sample after it is reduced in volume to 100 mL. This is done to provide lower reporting limits.	This is done to provide lower reporting limit for mercury by taking an aliquot after sample concentration.	Previously Approved as Minor
III. Metals Analysis Modifications – KNOX-MT-0007 SOP based on SW-846 METHOD 6010B		
Mixed calibration standard solutions are purchased from approved vendors.	For ICP Atomic Emission Spectroscopy, a vendor prepared mixed standard containing the analytes of interest is used to calibrate the instrument rather than using individual solutions of the elements.	Previously Approved as Minor
SW-846 Method 6010B states that if the correction routine is operating properly, the determined apparent analyte(s) concentration from analysis of each interference solution should fall within a specific concentration range around the calibration blank. In determining inter-element correction factors, the laboratory uses the procedure in EPA CSP ILMO4.0.	In determining IEC's, because lack of definition in Method 6010B, the laboratory has adopted the procedure in EPA CLP ILM4.0 for the –concentration range around the calibration blank.‖	Previously Approved as Intermediate

Table 5-4. (continued) Method Modifications

Modification	Justification	Proposed Category
(continued) IV. Metals Analysis Modifications – KNOX-MT-0007 SOP based on SW-846 METHOD 6010B		
ICSA (interference check sample A) results from the non-interfering elements must fall within ± 1 RL from zero. If this is not achieved, the field sample data must be evaluated.	This is a clarification of the criteria used by the laboratory since it is not specified in the reference method.	Previously Approved as Intermediate
The calibration blank is prepared in 5% nitric acid and 5% hydrochloric acid, rather than 2% nitric acid and 10% hydrochloric acid.	The matrix used by the laboratory provides for improved performance relative to the wide variety of digestate acid matrices which result from the various EPA preparation protocols applied.	Previously Approved as Intermediate
Method blanks are considered acceptable if they are below the reporting limit, rather than the method detection limit.	Method 6010B does not list air as one of the applicable matrices although Method 29 references 6010. The method blank criteria have been set to support the reporting limits provided for the air matrix and is qualified to the laboratory MDL.	Previously Approved as Intermediate
IV. PM and HCl/Cl_2 Sampling Modifications		
A Teflon® transfer line will be used between the filter and the first impinger of the sampling train.	This is done to address space limitations on the stack, to allow for ease in probe moving and to minimize potential hazards moving the very large and heavy impinger box. **Additional Information:** The use of a sample transfer line is authorized/discussed in EPA Method 26A, EPA Method 23 and SW-846 Method 0023A. Method 26A states that if a–flexible‖ line is used (i.e., a transfer line) it must be rinsed into the first impinger. Methods 23 and 0023A state that the transfer line must be Teflon®, and must be heated. The sample transfer lines for EPA Methods 5/26A and 29 will not be heated. The sample lines will be recovered in the fashions prescribed in the methods for the back-half of the filter holder into the container for the first impinger.	Previously Approved as Minor

Table 5-4. (continued) Method Modifications

Modification	Justification	Proposed Category
IX. Dioxins/Furans Analysis Method Modifications – SW-846 METHOD 0023A/8290A (Test America Laboratories, Inc. Knoxville)		
8290A – Toluene volumes and cycle rates for Soxhlet extractors have been optimized for the specific size of glassware used.		Previously Conditionally Approved as Minor The Cycle time requirement in the method must be met.
8290A - The carbon column used in this procedure is based on the column specified in method 8280. Silica gel is used as the carbon column support instead of Celite 545® as specified in methods 8290A and 1613B. It has been determined that silica gel is less likely to contain contaminants and interferences which are not removed by the pre-cleaning procedures than Celite 545®, yet it performs similarly. The solvents and elution schemes used are as specified in method 8280 rather than 8290A and 1613B.		Previously Conditionally Approved as Intermediate The laboratory must meet the recovery criteria for samples cleaned with this mixture.
8290A - Disposable glassware (40 mL VOA vials) is used in the acid-base cleanup procedure instead of a separatory funnels. Reagent volumes are adjusted as appropriate for the size of the vials.	Modifications have been made to reduce sample cross contamination and/or reduce preparation related waste.	Previously Conditionally Approved as Intermediate Provided that care is taken to ensure that the removal of aqueous wash layers is performed in a way that avoids loss of the extraction solvent and associated sample. In particular, the glass pipette used to remove the bottom layer should be rinsed with fresh solvent after the final aqueous layer removal to ensure sample adsorbed to the surface of the pipette is recovered and returned to the sample solution.
8290A - The Window Defining Standard and Isomer Specificity Standard are combined with the Continuing Calibration CS3 Standard into one solution.		Previously Conditionally Approved as Intermediate Provided that the standard is used at the required steps to either calibrate the analytical system (Calibration point 3) or evaluate the GC column Performance subsequent to initial calibration. The individual concentration of unlabeled or labeled standards in this solution must not exceed 100 ng/mL within analytical error.

5.2 Stack Gas Sampling

5.2.1 EPA Method 1 (Sample Port Location)

The Unit 2 and 3 stacks are approximately 90 feet high with an inside diameter of 39 inches at the elevation of the sampling ports. On both stacks, the sampling ports for the isokinetic collection of PM (EPA Method 5), metals (EPA Method 29), and dioxins/furans (SW-846 Method 0023A) are located approximately 32 feet from the point where gas enters the stack and approximately 49 feet from the end of the stack. The distances (in terms of duct diameters) from the first set of ports to the upstream and downstream flow disturbances are approximately 9.9 and 15.1, respectively.

In addition to the orthogonal sampling ports, there is a single sampling port located about four (4) feet upstream of the stack gas flow from the orthogonal ports, and roughly 45° between the orthogonal ports. The Modified Method 26A sampling train, for the measurement of HCl/Cl_2 in the second part of each test run, will be collected through this port. A schematic of the stack sampling location for Units 2 and 3 is presented in Figure 5-1.

The Unit 4 stack is approximately 100 feet high with an inside diameter of 48 inches at the elevation of the sampling ports. The sampling ports are located approximately 65.5 feet from the point where gas enters the stack and approximately 26 feet from the end of the stack. The distances (in terms of duct diameters) from the ports to the upstream and downstream flow disturbances are approximately 16.4 and 6.5, respectively.

As for Units 2 and 3, in addition to the orthogonal sampling ports, there is a single sampling port located about four (4) feet upstream of the stack gas flow from the orthogonal ports, and roughly 45° between the orthogonal ports. The Modified Method 26A sampling train, for the measurement of HCl/Cl_2 in the second part of each test run, will be collected through this port. A schematic of the stack sampling location for Unit 4 showing the location of the orthogonal sampling ports is presented in Figure 5-2.

For all three stacks, following the guidance of EPA Method 1, there will be 12 sampling points (i.e., six (6) traverse points on both of two diameters of the stack) during isokinetic sampling for PM by EPA Method 5, metals by EPA Method 29, and dioxins/furans by SW-846 Method 0023A. The dimensions of the stacks (i.e., inside diameter at the sampling plane, and upstream and downstream disturbances) will be measured in association with the CPTs, prior to the start of testing. The number of required traverse points will be confirmed based on these measurements.

5.2.2 EPA Methods 2, 3A, and 4 (Flowrate, Gas Composition, and Moisture)

Concurrent with the performance of the isokinetic trains (EPA Methods 5 and 29 and SW-846 Method 0023A), measurements will be made to determine gas velocity in accordance with 40 CFR Part 60, Appendix A, Method 2. Moisture by EPA Method 4 will be performed in conjunction with the isokinetic sampling trains. Stack gas will be sampled over the course of the test run and analyzed by CEMs for the determination of oxygen and carbon dioxide by EPA Method 3A. Veolia plant CEMs will be used for the determination of O_2 concentration for the purpose of correcting stack gas emissions to 7% O_2.

Prior to the collection of any stack gas samples, the stack will be measured, and traverse points verified, per the requirements of EPA Method 1. Also, the absence of cyclonic flow will be verified by performing a cyclonic flow check of both stack traverse diameters. The Method 1 measurement will be documented on the data sheet presented as Figure 5-3.

During the collection of each isokinetic sampling train, differential pressure measurements across a Type-S pitot tube will be recorded to determine the isokinetic sampling rate (EPA Method 2). These data will be recorded on a data sheet, as shown in Figure 5-4. These measurements will be performed to determine the isokinetic sampling rate.

Figure 5-1. Stack Sampling Location – Units 2 and 3

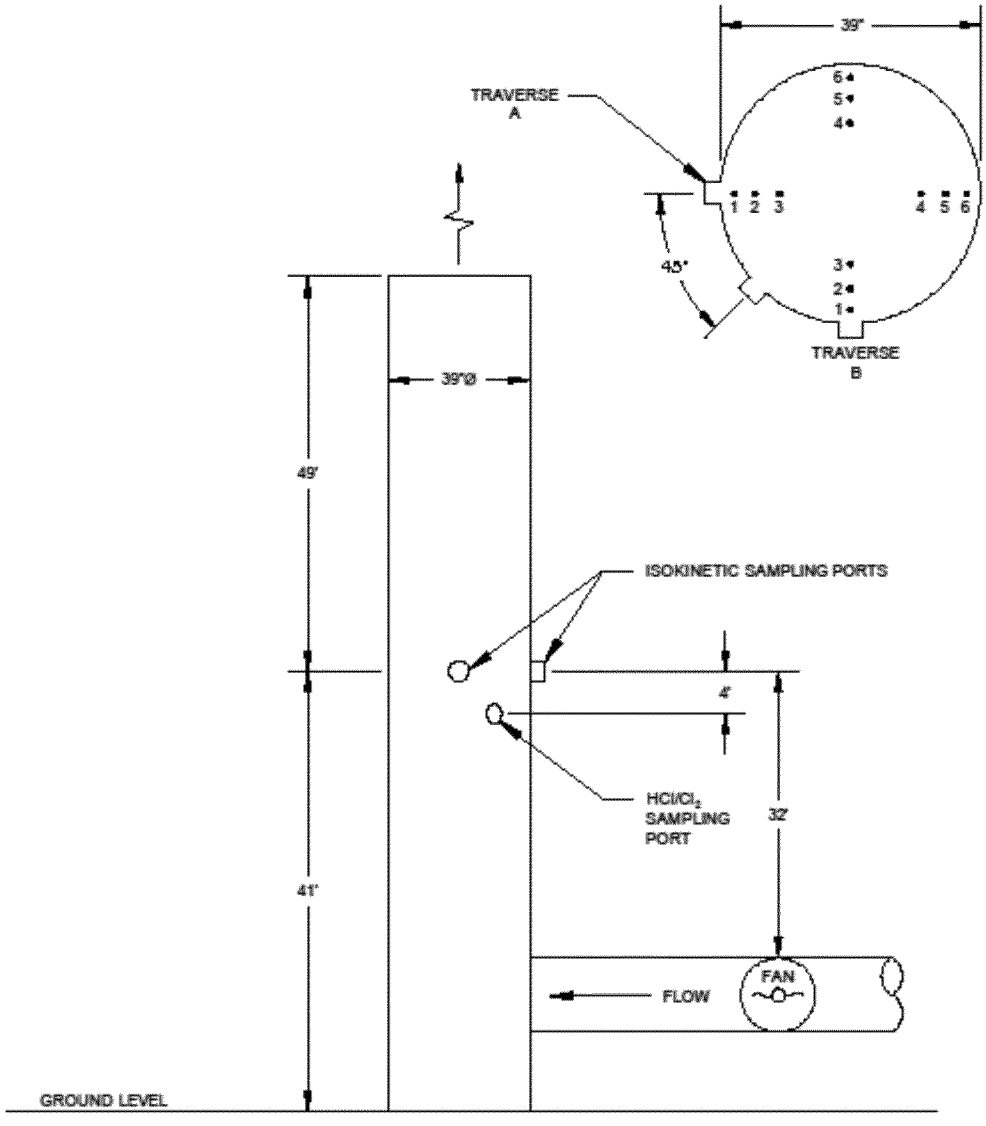

Figure 5-2. Stack Sampling Location for Unit 4

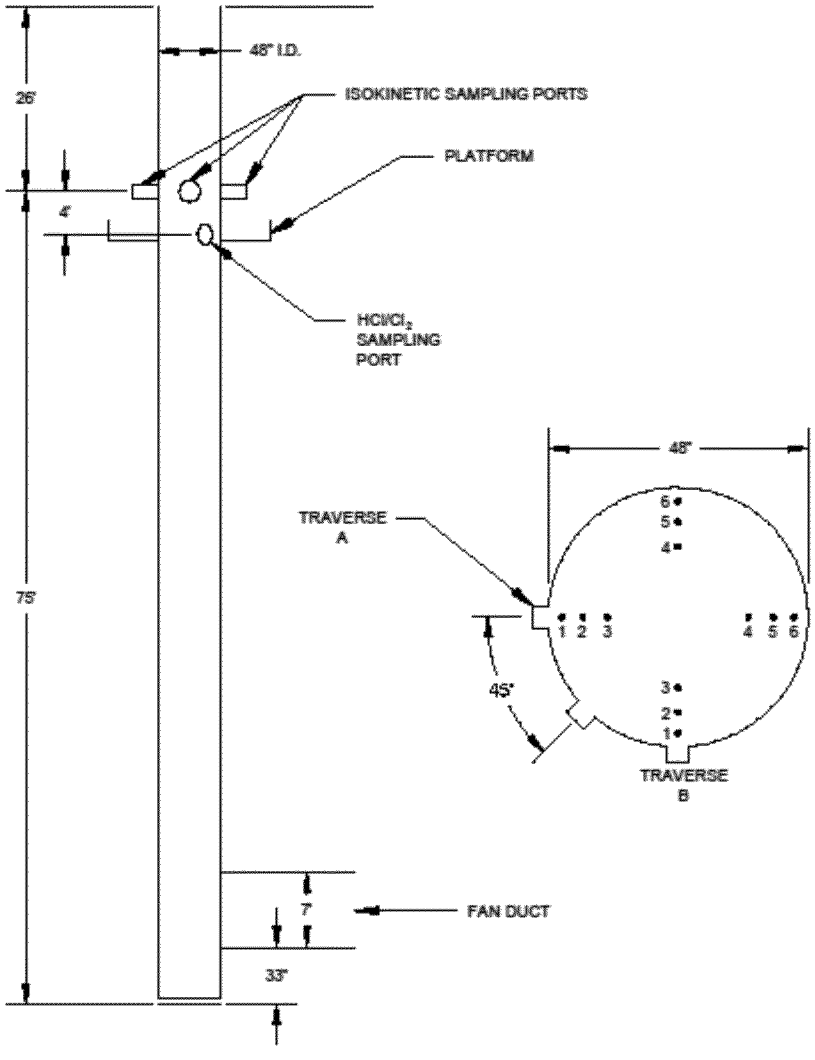

Figure 5-3. Traverse Point Data Sheet

Method 1 Data Sheet – Circular Duct

Project Name	□ Velocity Only	Upstream Distance _____
Project Number	□ Isokinetic Sampling	□ Measurement
Date	Number of Ports to be sampled	□ Plant Information
Source	Duct Diameter _____	Downstream Distance _____
Operator	□ Measurement □ Plant Information	□ Measurement □ Plant Information

Total number of Traverse Points (from Figure _ (velocity) or _ (all isokinetic sampling))	
Number of traverse points per port	
Port Depth	

Traverse Point	Percent of Diameter	Distance from Wall	Marking Location	Traverse Point	Percent of Diameter	Distance from Wall	Marking Location
1				13			
2				14			
3				15			
4				16			
5				17			
6				18			
7				19			
8				20			
9				21			
10				22			
11				23			
12				24			

LOCATION OF TRAVERSE POINTS IN CIRCULAR STACKS
(Percent of stack diameter from inside wall to traverse point)

Traverse Point Number on a Diameter	Number of traverse points on a diameter											
	2	4	6	8	10	12	14	16	18	20	22	24
1	14.6	6.7	4.4	3.2	2.6	2.1	1.8	1.6	1.4	1.3	1.1	1.1
2	85.4	25.0	14.6	10.5	8.2	6.7	5.7	4.9	4.4	3.9	3.5	3.2
3		75.0	29.6	19.4	14.6	11.8	9.9	8.5	7.5	6.7	6.0	5.5
4		93.3	70.4	32.3	22.6	17.7	14.6	12.5	10.9	9.7	8.7	7.9
5			85.4	67.7	34.2	25.0	20.1	16.9	14.6	12.9	11.6	10.5
6			95.6	80.6	65.8	35.6	26.9	22.0	18.8	16.5	14.6	13.2
7				89.5	77.4	64.4	36.6	28.3	23.6	20.4	18.0	16.1
8				96.8	85.4	75.0	63.4	37.5	29.6	25.0	21.8	19.4
9					91.8	82.3	73.1	62.5	38.2	30.6	26.2	23.0
10					97.4	88.2	79.9	71.7	61.8	38.8	31.5	27.2
11						93.3	85.4	78.0	70.4	61.2	39.3	32.3
12						97.9	90.1	83.1	76.4	69.4	60.7	39.8
13							94.3	87.5	81.2	75.0	68.5	60.2
14							98.2	91.5	85.4	79.6	73.8	67.7
15								95.1	89.1	83.5	78.2	72.8
16								98.4	92.5	87.1	82.0	77.0
17									95.6	90.3	85.4	80.6
18									98.6	93.3	88.4	83.9
19										96.1	91.3	86.8
20										98.7	94.0	89.5
21											96.5	92.1
22											98.9	94.5
23												96.8
24												99.9

Figure 5-4. Isokinetic Sampling Data Sheet

Sample Type –	Start Time	Condition	Page	of	
Plant Name –	End Time	Run/	Sampling Train Leak Rate (ft^3 @ in. Hg)		
Project Number -	Duration (min)	Operator	Initial	@	
Date	PTCF	Nozzle Dia (in)	Final	@	
Location (Source) -	DGMCF	Kf	Pitot Tube Leak Check		
Duct Dimension(s)	Console No.	ΔH@	Pitot Tube ID		
Elevation (relative to Barometer) (ft)		Bar. Press. (In. H_2O)	Initial	(+)	(-)
Nozzle Calib.		Stat. Press. (in. H_2O)	Final	(+)	(-)
			Filter No.		

Point	Clock Time	Dry Gas Vol. (ft^3)	ΔP (in. H_2O)	ΔH (in. H_2O)	Stack Temp (°F)	Probe Temp (°F)	Filter Temp (°F)	Impinger Temp (°F)	Dry Gas Meter Temp		Vacuum (in. Hg)	
									Inlet (°F)	Outlet (°F)		

Comments:

5.2.3 Particulate Matter (EPA Method 5)

During the CPT, samples for the determination of PM in stack emissions will be collected in the first part of each run of the test condition for each unit using a single sampling train meeting the requirements of EPA Method 5. This sample train consists of the following components:

- Glass (quartz) nozzle;
- Heated, glass (quartz)-lined probe;
- Heated Teflon mat filter with a Teflon® filter support;
- Teflon® transfer line;
- Optional empty knockout impinger;
- Greenburg-Smith impinger containing 100 mL of DI water;
- Greenburg-Smith impinger containing 100 mL of DI water;
- Empty Modified Greenburg-Smith impinger; and
- Modified Greenburg-Smith impinger containing silica gel.

A minimum sampling duration and sample volume are specified in Table 5-3.

The procedures specified in EPA Method 5 will be used to determine particulate matter. This procedure requires the isokinetic extraction of particulate matter on a filter maintained at a controlled temperature between 223°F and 273°F. A Teflon® union will be used to connect the glass or quartz nozzle to the glass or quartz probe liner. The particulate mass, which includes all material that condenses at or above the filtration temperature, is determined gravimetrically, after desiccation.

After successful completion of each run, the PM samples will be recovered into the following components:

- Probe and nozzle rinse with acetone for PM determination; and
- Filter for PM determination.

PM determinations will be done according to the gravimetric method described in EPA Method 5.

5.2.4 Hydrogen Chloride/Chlorine (Modified EPA Method 26A)

During the second part of the test condition of the CPT for each unit, samples for the determination of HCl/Cl_2 in stack emissions will be collected using a modification of EPA Method 26A, proposed and approved by EPA Region 5. A schematic diagram of this sampling train is shown in Figure 5-5. This sample train consists of the following components:

- Glass (quartz) nozzle;
- Heated, glass (quartz)-lined probe;
- Heated Teflon mat filter with a Teflon® filter support;
- Teflon® transfer line;
- Optional empty knockout impinger;
- Greenburg-Smith impinger containing 100 mL of 0.1 N H_2SO_4;
- Greenburg-Smith impinger containing 100 mL of 0.1 N H_2SO_4;
- Modified Greenburg-Smith impinger containing 100 mL of 0.1 N NaOH;
- Modified Greenburg-Smith impinger containing 100 mL of 0.1 N NaOH; and
- Modified Greenburg-Smith impinger containing silica gel.

A minimum sampling duration and sample volume are specified in Table 5-3.

Figure 5-5. Schematic Drawing of Modified EPA Method 26A Sampling Train for Determination of Hydrogen Chloride/Chlorine

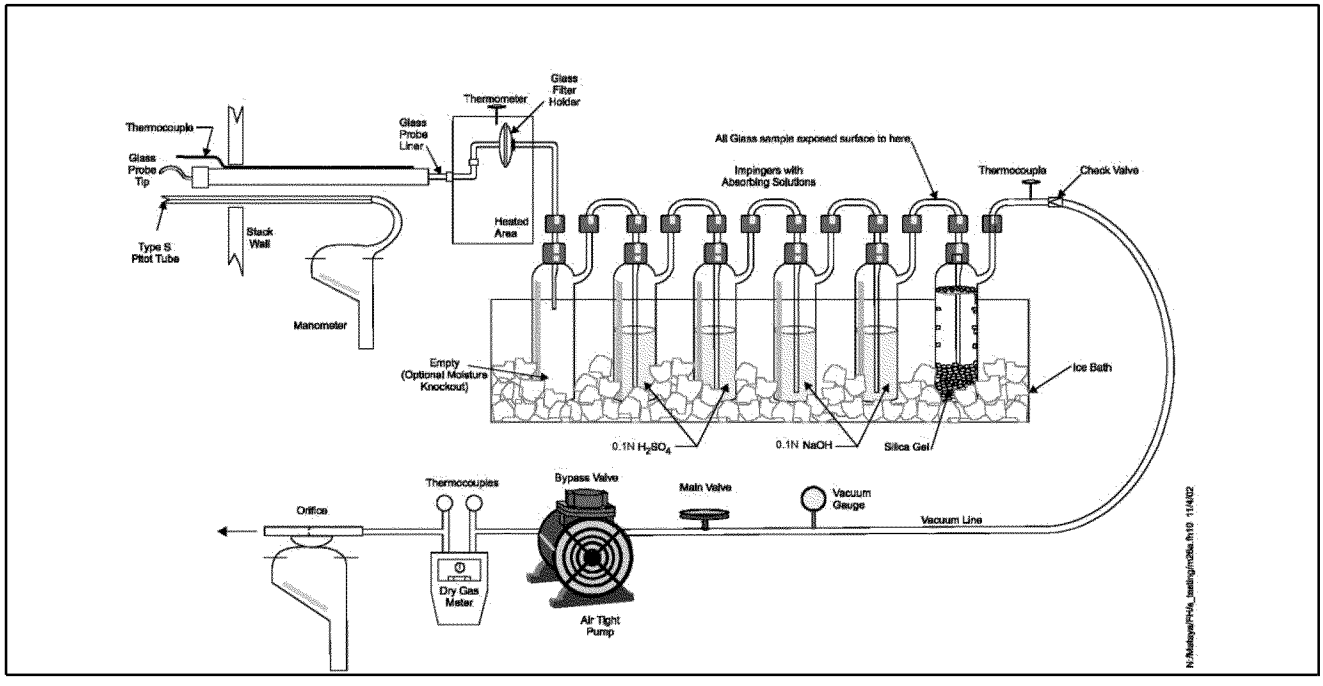

The procedures specified in EPA Method 5, as referenced in EPA Method 26A, will be used for the isokinetic collection of the sample except that the sample will be collected at a single point located at the center of the stack. A Teflon® union will be used to connect the glass or quartz nozzle to the glass or quartz probe liner. The filter and probe will be kept at a temperature between 248ºF and 273ºF, and a Teflon®-backed filter will be used, as specified in EPA Method 26A.

Following sample collection, the sampling train will be purged according to Section 8.1.6 of Method 26A. This ensures that any Cl_2 in the acid impingers is carried into the alkaline impingers. Per Section 8.2.4 of Method 26A, sodium thiosulfate will be added to the collected alkaline impinger sample. This will be done in the analytical laboratory.

After successful completion of each run, HCL and Cl_2 samples will be recovered into the following components:

- Rinse of transfer line and contents and rinses of the acidic impingers (and optional knockout impinger) for determination of hydrogen chloride; and
- Contents and rinses of the alkaline impingers for determination of chlorine.

HCl and Cl_2 determinations will be done according to the ion chromatography method described in EPA Method 26A.

5.2.5 EPA Method 29 (Multiple Metals)

The multiple metals sampling train procedure described in EPA Method 29 will be used to collect stack samples isokinetically for the determination of emission concentrations for arsenic (As), beryllium (Be), cadmium (Cd), chromium (Cr), lead (Pb), and mercury (Hg). The multiple metals train, shown in Figure 5-6, consists of the following components:

- Glass nozzle;
- Heated, glass-lined probe;
- Heated filter;
- Teflon® transfer line;
- Empty modified Greenburg-Smith impinger (optional);
- Modified Greenburg-Smith impinger containing 100 mL of 5% HNO_3 and 10% H_2O_2;
- Greenburg-Smith impinger containing 100 mL of 5% HNO_3 and 10% H_2O_2;
- Empty modified Greenburg-Smith impinger;
- Modified Greenburg-Smith impinger containing 100 mL of 4% $KMnO_4$ and 10% H_2SO_4;
- Modified Greenburg-Smith impinger containing 100 mL of 4% $KMnO_4$ and 10% H_2SO_4; and
- Modified Greenburg-Smith impinger containing silica gel.

The guidelines presented in EPA Method 1 will be employed to determine the number of sampling points required across the diameter of the stack for measuring the average stack gas velocity and particulate loading. EPA Methods 2 and 4 will be performed in conjunction with this sampling train to determine the isokinetic sampling rate, and to measure the stack gas velocity and volumetric flowrate. The sampling will be conducted at equal time intervals along the selected traverse points, as described in the method. Minimum sample times and volumes for the Method 29 sample train are provided in Table 5-3.

Figure 5-6. Sampling Train Schematic - Multiple Metals Sampling Train, Method 29

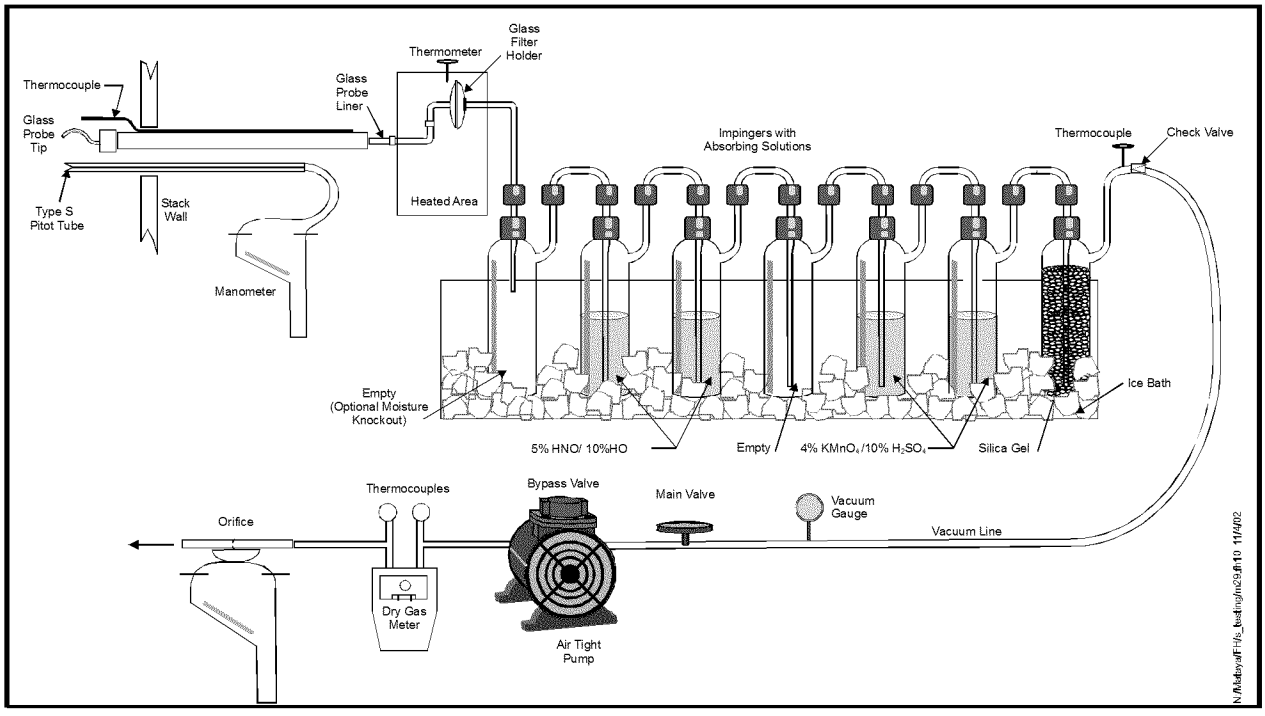

Following sampling, the Method 29 sampling train will be recovered into the following six components:

- Nitric acid probe and nozzle rinse;
- Filter;
- Rinses of the transfer line and contents and rinses of knock-out impinger and HNO_3/H_2O_2 impingers;
- Rinse of empty impinger between the HNO_3/H_2O_2 impingers and the $H_2SO_4/KMnO_4$ impingers;
- Combined contents of $H_2SO_4/KMnO_4$ impingers with impinger rinses with both acidic permanganate solution and water; and
- HCl rinse of $H_2SO_4/KMnO_4$ impingers.

A Teflon® transfer line will be used between the filter and the first impinger train. This is done to address space limitations on the stack, to allow for ease in probe moving, and to minimize potential hazards moving the very large and heavy impinger box.

The probe and nozzle rinse, filter, and contents and rinses from the knockout impinger and HNO_3/H_2O_2 impinger will be analyzed for the SVM metals (Cd and Pb) and the LVM metals

(As, Be, and Cr) using SW-846 Method 6010B. These components as well as the $H_2SO_4/KMnO_4$ and HCl rinse will be analyzed for mercury by SW-846 Method 7470A.

5.2.6 SW-846 Method 0023A (Dioxins/Furans)

Samples for the determination of dioxins/furans in stack gas will be collected according to SW-846 Method 0023A. The sampling train is shown in Figure 5-7.

The sampling train consists of the following components:

- Glass nozzle;
- Heated, glass-lined probe;
- Heated filter;
- Heated Teflon® transfer line;
- Sorbent module;
- Knock-out impinger;
- Greenburg-Smith impinger containing 100 mL water;
- Modified Greenburg-Smith impinger containing 100 mL water; and
- Modified Greenburg-Smith impinger containing silica gel.

From the heated filter, sample gas passes through a heated Teflon® transfer line before entering the sorbent module. The sorbent module consists of a water-cooled condenser and a resin trap containing XAD-2® resin. The condenser is used to ensure that the gas entering the resin trap is below 68°F. EPA Methods 2 and 4 will be performed in conjunction with this sampling method to determine the isokinetic sampling rate.

The sampling method includes several unique preparation steps which ensure that the sampling train components are not contaminated with organics that may interfere with analysis. The glassware, glass fiber filters, and absorbing resin will be cleaned and the filters and resin will be checked for residues before they are packed using standard laboratory procedures.

Isotopically-labeled dioxins/furans will be spiked onto the XAD-2® resin both before field sampling (surrogate standards) and into appropriate places in the preparation prior to analysis after returning from the field. Following the completion of sampling, the SW-846 Method 0023A sampling train is recovered into the various fractions presented in Section 8.1 of this document. The recovery of the labeled compounds, spiked onto the XAD-2® resin before sampling, is used to evaluate sampling recovery, and recovery of the labeled compounds, spiked prior to analysis, is used to evaluate analytical recovery, of dioxins/furans samples

Figure 5-7. Sampling Train Schematic – Dioxins/Furans by SW-846 Method 0023A

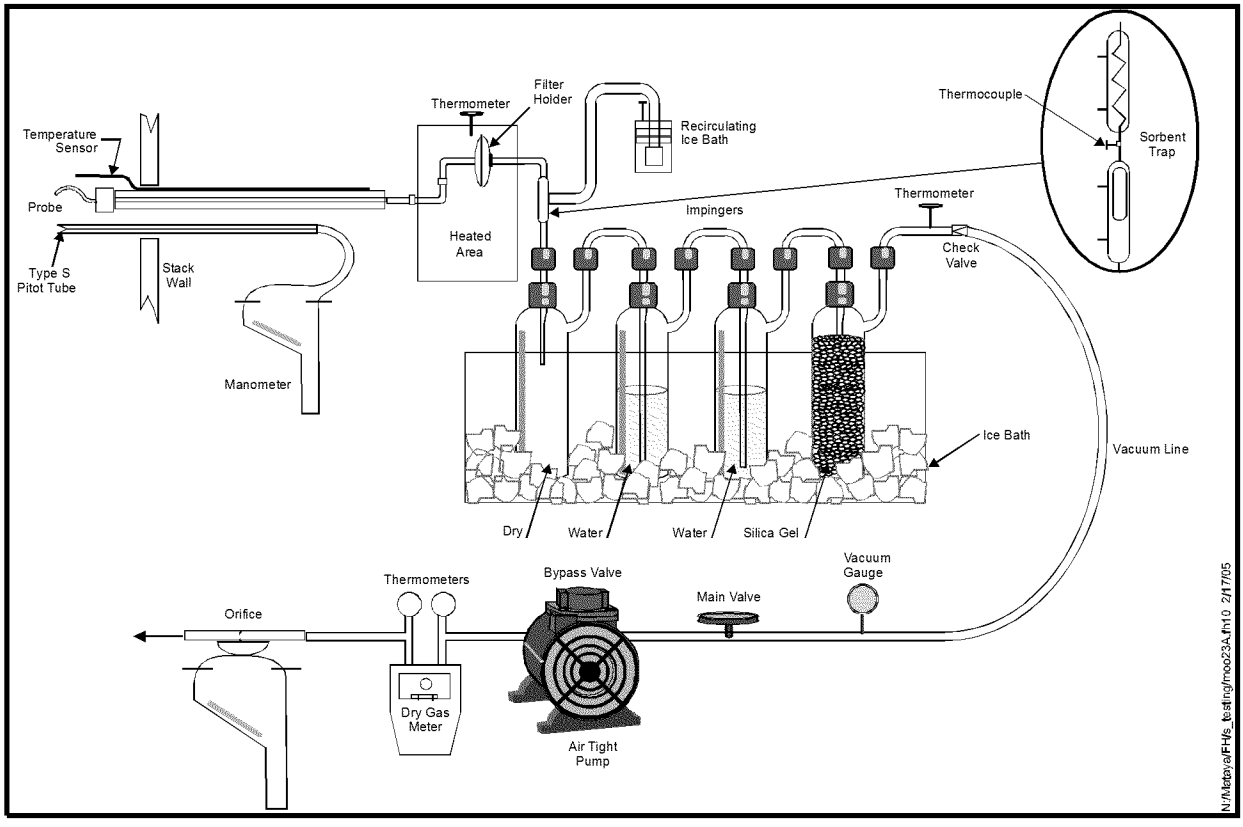

Sampling train preparation and sample recovery will be performed in a controlled environment to reduce the possibility of sample contamination. Prior to assembly, each component of the sampling train will be rinsed thoroughly with methylene chloride. The quartz filter will also be pre-rinsed with methylene chloride. All connections in the sampling train will be installed dry or with Teflon® to reduce the possibility of contamination. Once the sampling train has been assembled, the nozzle and exit port will be sealed. After sample collection, the ends of the sampling train will once again be sealed, and the train will be returned to the clean-up area for sample retrieval. The filter will be recovered and placed in a methylene chloride-rinsed glass Petri dish. All components of the sampling train, from the nozzle through the sorbent module, including the nozzle, probe, filter glassware, and impinger glassware, will be rinsed thoroughly. The nozzle and probe will be cleaned using a Teflon® brush followed by rinsing with solvents.

The sample train returned from the field will be recovered into the following components:

- Filter;
- Rinse of all glassware between the nozzle and filter with acetone, methylene chloride, and toluene;
- Rinse of all glassware between the filter and sorbent with acetone, methylene chloride, and toluene; and
- XAD-2® sorbent.

The recovered fractions will be combined to provide two extracts for analysis:

- Combination of the filter and all the rinses between the nozzle and filter (i.e., the front-half); and
- Combination of the sorbent and all the rinses between the filter and sorbent (i.e., the back-half).

The samples will be analyzed according to SW-846 Methods 0023A and 8290A for dioxins/furans.

5.2.7 Continuous Emission Monitors

The concentrations of total hydrocarbons (THC), oxygen, and carbon dioxide in the stack gas will be determined using EPA Methods 25A and 3A respectively. Each of these methods utilizes a continuous monitor. O_2 and CO_2 will be monitored in both the first and second parts of each test run. THC will be monitored in the second part of each test run. A schematic of the monitoring system is presented in Figure 5-8.

Figure 5-8. Continuous Emission Monitoring System

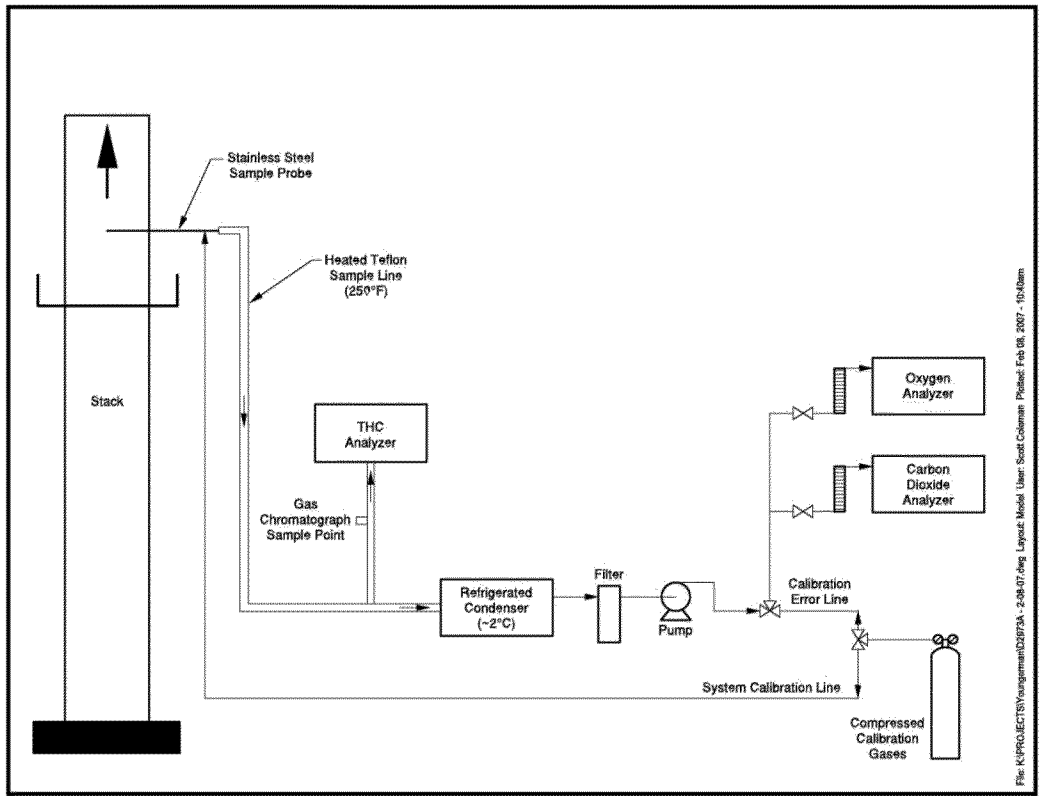

5.3 Waste Feed and Spiking Materials Sampling Procedures

Samples will be collected of both liquid and solid waste feed streams and of the spiking materials and solutions. Adequate amounts of the samples of the solid waste feed and the lead and chlorine spiking solutions will be collected such that duplicate samples can be made available to EPA Region 5.

Amber glass bottles with Teflon® cap liners will be used to collect samples of the liquid and solid waste feed streams. Sample bottles cleaned following the cleaning procedures in the OSWER Directive 9240.0-05A—Specifications and Guidance for Contaminant-Free Sample Containers‖ will be purchased for use in the CPT.

5.3.1 Liquids Sampling Procedures

Samples of the liquid waste feed and chromium spiking solution will be collected in amber glass bottles with Teflon™ cap liners. The mercury solution samples will remain in the vials in which the mercuric nitrate solution was fed to the incinerator. The liquid waste feed will be characterized for ash, total chlorine,heat content, moisture, density, and viscosity in the first part of the test In the second part of the test, composite waste feed samples will be prepared over the respective sampling times of the Modified Method 26A stack sampling for

HCl/Cl_2, Method 29 stack sampling for metals, and the Method 0023A stack sampling for dioxins/furans. Each of the composite liquid waste feed samples will be analyzed for ash, total chlorine, heat content, moisture, density, and viscosity. The composite liquid waste feed samples collected during the Method 29 stack sampling will also be analyzed fometals (arsenic, beryllium, chromium, cadmium, lead, and mercury). URS will be collecting the spike and waste samples.

Samples of the liquid waste feed will be collected (approximately) every 15 minutes during each of the three runs of the CPT beginning at the start of stack sampling through completion of stack sampling for both the first and second parts of the CPT for each of the three units. Individual samples (i.e., sub-samples) will be collected (approximately) every 15 minutes throughout the test. No samples will be collected following the completion of stack sampling for the first part or second part of a run.

Samples of the liquid waste feed will be collected at 15-minute intervals during each run. At the beginning and at 15-minute intervals throughout the collection of the of the Method 5 sampling train of the first part of the test, approximately 500-mL samples of the liquid waste feed stream will be collected. At the beginning and at 15-minute intervals throughout the collection of the Modified Method 26A sampling train of the second part of the test, approximately 500 mL samples of the liquid waste feed stream will be collected. At the beginning and at 15-minute intervals throughout the collection of the Method 29 sampling train of the second part of the test, approximately 300 mL samples of the liquid waste feed stream will be collected. At the beginning and at 15-minute intervals throughout the collection of the Method 0023A sampling train of the second part of the test, approximately 200 mL samples of the liquid waste feed stream will be collected. The sub-samples will be collected at each designated sampling time, and the collected material (i.e., sub-sample) will be transferred into a larger container, producing a composite sample of the liquid waste feed. The composite liquid waste feed samples from the first part and the second part of the CPT will be analyzed.

In addition to the collection of sub-samples every 15 minutes of the liquid waste that will be used to prepare the composite samples that will be analyzed, individual 500 mL samples will be collected every 15 minutes. The individual 500-mL samples collected every 15 minutes will be archived for further analysis, if required. Archived samples will be retained for 90 days.

Samples of the chromium and mercury spiking solutions will be collected in each run of the second part of the test. At the beginning, middle (at port change), and end of the Method 29 sampling of the second part of the test, approximately 125-mL samples of the chromium spiking solution will be collected. At the same frequency, samples of the mercury spiking

solution will be collected from randomly selected waste feed containers. The individual samples of the chromium and mercury spiking solutions collected during each run of the test will be analyzed for chromium or mercury, respectively. A fourth sample of the chromium and mercury spiking solutions will be collected at the completion of the Method 0023A sampling train. This fourth sample will be archived.

Liquid waste samples will be collected upstream of any metal spiking location using the tap sampling procedure specified in U.S. EPA Method S004, "Sampling and Analysis Methods for Hazardous Waste Combustion." The sample tap will be flushed each time by allowing the sample to flow briefly before the sample is collected. This will ensure that any stagnant accumulation of solids, or other contaminants that may be present in the tap, does not affect the sample integrity or its representation of the stream being sampled.

A Standard Operating Procedure (SOP) for the collection and compositing of liquid waste samples is in Appendix C.

Adequate amounts of the samples of the liquid waste feed and the chromium and mercury spiking solutions will be collected such that duplicate samples can be made available to EPA Region 5.

5.3.2 Solids Sampling Procedures

Only containerized solid wastes are fed to Units 2 and 3 Solid wastes are fed to Unit 4 as both containerized and bulk. For the containerized solid waste feedstream, every 15 minutes throughout the test a randomly selected container being fed to the incinerator will be collected. Approximately 1-liter samples of bulk solids (Unit 4 only) will be collected every 15 minutes throughout the test from the waste feed bins in the Bulk Solids Storage Building. Grab samples from the waste bins will be collected using a pre-cleaned scoop. Sub-samples of the containerized and bulk solid wastes, respectively, collected from the first part of the test will be composited so that the result is a composite sample for the first part of the test Sub-samples from the second part of the test will be composited to produce composite sample over the respective sampling times of the Modified Method 26A stack sampling for HCl/Cl_2, Method 29 stack sampling for metals, and the Method 0023A stack sampling for dioxins/furans for the second part of the test In the preparation of the composite samples of the containerized solid waste that will be analyzed, sub-samples will be taken from the randomly selected containers using a pre-cleaned scoop and combined. In the preparation of the composite samples of the bulk solid waste that will be analyzed, material will be taken from the sub-samples collected at 15-minute intervals and combined. URS will be collecting the spike and waste samples.

Analyses will be performed on the composite samples. All of the composite solid waste feed samples from the first and second parts of the test, containerized and bulk, will be

characterized for total chlorine,ash, moisture, andheat content. The composite containerized and bulk solid waste feed samples collected during the Method 29 stack samplingfrom the second part of each test will also be analyzed formetals (arsenic, beryllium, chromium, cadmium, lead, and mercury).

In addition, approximately 500-mL samples of the randomly selected containerized waste collected every 15 minutes will be taken and archived for further analysis, if required. Following the removal of material from the sub-samples of the bulk solids collected every 15 minutes to prepare the composite sample for the test, the remaining portion of the sub-samples of bulk solid waste will be archived for further analysis, if required. Archived samples will be retained for 90 days.

Samples of the solid waste feeds, containerized and bulk, will be collected (approximately) every 15 minutes during each of the three runs of the CPT beginning at the start of stack sampling through completion of stack sampling for the first and second parts of the CPT for each of the three units. Individual samples (i.e., sub-samples) will be collected (approximately) every 15 minutes throughout the test. No samples will be collected following the completion of stack sampling for the first part or second part of a run.

Spikes of solid lead and chlorine will be added to the containerized solid waste. Samples of the chlorine and lead spiking materials will be collected in the second part of the test Three grab samples of the chlorine and lead spiking materials will be collected at the beginning, middle (at port change), and end of the Method 29 sampling of the second part of the test. A fourth sample of the lead and chlorine spiking materials will be collected at thecompletion of the Method 0023A sampling train in the second part of the test All samples of the lead and chlorine spiking materials will be archived. Archived samples will be retained for 90 days.

Adequate amounts of the samples of the solid waste feed and the lead and chlorine spiking materials will be collected such that duplicate samples can be made available tdU.S. EPA Region 5.

Composites of the solid waste feeds– containerized solid waste for Units 2, 3, and 4, and bulk solid waste for Unit 4– will be prepared on site at Veolia at the completion of each ofhe CPTs for Units 2, 3, and 4.The composite samples will be prepared in a well-ventilated area, and personnel preparing the composite samples will wear appropriate PPE

A Standard Operating Procedure (SOP) for the compositing of solid waste samples is in Appendix D.

Figure 5-9. Process Sampling Data Sheet

Process Composite
Sampling Data Sheet

Client _____ Run No. _____

Unit _____ Sample ID _____

Sampling Location _____ Initials _____

Date/Time	Volume (ml)	Date/Time	Volume (ml)

6.0 Sample Handling, Traceability, and Holding Times

Sample handling procedures, including labeling, preserving, storing, and transporting samples, will be conducted in a way to ensure the integrity of the samples and to provide an unambiguous link between the results of the analyses and the physical conditions they represent. The following sections describe general sample handling concerns, the sample labeling scheme, sample tracking procedures, and sample preservation and holding time requirements.

6.1 Sample Handling

Samples will be protected from evaporation, contamination, and degradation. Following collection, samples will be handled in clean, ventilated work areas and will be removed to dark, cool storage, as necessary and as soon as possible. Sample containers will be labeled using waterproof ink.

The samples will be packaged for transport. All sample containers will be wiped clean before packaging. Absorbent paper, vermiculite, or equivalent material will be used to absorb shock and spills. A sample transfer form will be transported with the samples, identifying each sample and the analytical requirements. The samples will either be shipped overnight by carrier, or URS personnel will drive the samples to Test America Laboratories in Knoxville, Tennessee.

The samples will be locked every night inside the field laboratory and during the day they will always be in the possession of URS personnel. URS will complete portions of the chain-of-custody on the date of recovery; these portions will include sample ID and date and time of recovery. In addition, the sample logbook will be completed on the date of recovery that will contain the same information as the chain of custody with the addition of tare and final weights for each sample bottle. Sample custody will transfer when samples are handed over to the analytical laboratory by URS personnel.

Filters from stack sampling for metals will be placed in glass Petri dishes, sealed with Teflon® tape, and placed in individual zip-lock plastic bags in coolers with other stack sample fractions for transport to the laboratory. Ice contained in double plastic bags will be added and refreshed, as necessary, for the duration of transport.

Chain-of-custody records will accompany the samples during transport to the laboratory. These documents will be enclosed in a waterproof plastic bag.

Upon receipt of samples, the laboratory sample custodian will open each shipping container and check the contents for evidence of breakage or leakage. The contents of the

shipping container will be inspected for chain-of-custody documents and other information or instructions. The condition of the samples, including the presence of ice will be noted on the chain-of-custody document. The sample custodian will verify that all information on the sample bottle labels is correct and consistent with the chain-of-custody forms, and will acknowledge receipt on the custody form. The chain-of-custody form and the bill of lading will be retained in the project file.

Any discrepancy between the samples and the chain-of-custody information, any broken or leaking sample bottles, or any other nonconformance will be reported immediately to the Analytical Coordinator and corrective action options will be discussed and implemented. Notations of the problem and resolution will be made on the chain-of-custody or an addendum to the chain-of-custody form, initialed, and dated by the sample custodian. The Veolia Test Manager, URS Project Manager, and QA/QC Coordinator will be kept informed of all issues and responses.

6.2 Traceability

Traceability refers to the link between the results of analyses and the physical reality they represent. This link includes not only sample custody but also documentation of preparation of reagents or supplies that become an integral part of the sample (e.g., filters and absorbing reagents, documentation of the exact location, and specific considerations associated with sample acquisition, documentation of sample preservation, etc.). This type of data will be recorded in field logbooks and through the use of prepared sample labels and standardized field tracking forms.

Accurate documentation of field sampling data, sample collection and handling records will be maintained throughout the program by all participants involved in data and sample collection, transport, and analysis. Team leaders have been designated for the field testing effort (Section 2.0) and will be responsible for ensuring the completion of all data sheets, sample log book entries, and transfer forms. Field personnel involved in the sample collection and recovery will assist in this effort as their individual responsibility dictates.

All sampling data, including sampling times, locations, identification codes, and other pertinent and specific sample information will be recorded on pre-printed data sheets or in bound notebooks. Samples of data sheets are provided in Section 5.0. For individual samples, all pertinent information will be logged in the master sample logbook.

A master logbook will be kept for tracking and identifying all samples taken during the test effort. Each sample will be given a unique log number that will identify the project, run number, and an identification code based upon the sample type and fraction. An example of the log number format follows:

Proj-XY-ABC

Where:

Proj is a project specific identification,
XY represent the condition and run number, and
ABC is an alphanumeric sequence describing the particular sample.

Sample labels will be affixed to all sample bottles used for sample collection. The label will be marked to include date and time(s) of collection, the sampler's initials, and tare weight and gross weight (as appropriate), and the sample log number. Transfer forms will be completed by field personnel involved in the sample handling prior to transfer for off-site analysis. Figure 6-1 shows an example of the transfer form.

6.3 Holding Times

A summary of sample preservation and holding times is presented in Table 6-1. Storage conditions will be checked on-site and upon receipt of samples at the laboratory. Any deficiencies will be recorded on the chain-of-custody and laboratory shipment receipt forms.

6.4 Sample Shipping and Logistics

Test America Laboratories in Knoxville, Tennessee will analyze the stack gas and waste feed samples. Samples will be packed by URS in the field, and either transported by overnight carrier or by URS personnel to the laboratory.

Table 6-1. Summary of Sample Preservation and Holding Time Requirements

Parameter	Sample Type	Preservation	Holding Time
Ash Chlorine Moisture Density Viscosity Heating Value	Waste Feed	Glass containers	Analyze within 30 days
Metals[1]	Waste Feed Spiking Solutions	Glass containers	Analyze within 180 days Analyze Hg within 28 days
Particulate Matter	Stack Gas	Plastic or glass containers	Analyze within 28 days
HCl/Cl_2	Stack Gas	Plastic or glass containers	Analyze within 28 days
Metals[1]	Stack Gas	Plastic or glass containers	Analyze within 180 days Analyze Hg within 28 days
Dioxins/Furans	Stack Gas	Sealed with glass or Teflon plugs or caps; resin traps wrapped with aluminum foil; cool, 4°C	Extract within 30 days; Analyze within 45 days of extraction

Analysis is for As, Be, Cd, Cr, Pb, and Hg in the Stack Gas and Waste Feeds. Spiking Solutions analyzed only for the targeted spiking metal.

Figure 6-1. Example Transfer Form for Samples

URS

Chain of Custody Record

Particulate Matter from Sampling Trains

Page ____ of ____

Project							
Site							
Project Number							
Prepared by							
Sample ID Code	**Sample Matrix**	Date/Time			Hold	MS/MSD	Comments

Remarks: Provide results in total milligrams per sample. Raw data package required

Relinquished by:	Date	Time	Received by:	Date	Time	Relinquished by:	Date	Time
Received by:	Date	Time	Relinquished by:	Date	Time			

Received for Laboratory by	Date	Time	Airbill No.	Opened by:	Seal #	Date	Time	Temp (C)

Seal #	Condition

Remarks

7.0 Calibration Procedures

Information presented in this section pertains to the calibration of sampling systems. Included are descriptions of each procedure or references to applicable standard operating procedures, the frequency of calibrations, and the calibration standards to be used.

An important function in maintaining data quality is the checkout and calibration of the source sampling equipment. Prior to field sampling, the equipment will be calibrated using referenced procedures, and the results will be documented and retained. If a referenced calibration technique for a particular piece of apparatus is not available, then state-of-the-art techniques will be used. A discussion of the procedures used to calibrate this equipment is presented below.

7.1 Type-S Pitot Tube Calibration

EPA has specified guidelines concerning the construction and geometry of an acceptable Type-S pitot tube. If the specified design and construction guidelines are met, a pitot tube coefficient of 0.84 can be used. Information related to the design, construction and inspection of the Type-S pitot tube is presented in detail in Calibration Procedure 2 in *Quality Assurance Handbook for Air Pollution Measurement Systems: Volume III, Stationary Source-Specific Methods, EPA Document 600/R-94/038c*. Only Type-S pitot tubes meeting the required EPA specifications will be used during this project. Prior to the field sampling, the pitot tubes will be inspected and documented as meeting EPA specifications. An example of the pitot tube inspection sheet is presented in Figure 7-1.

7.2 Sampling Nozzle Calibration

Calculation of the isokinetic sampling rate requires that the cross-sectional area of the sampling nozzle be accurately and precisely known. All nozzles used for isokinetic sampling will be thoroughly cleaned, visually inspected, and calibrated according to the procedure outlined in Calibration Procedure 5b in *Quality Assurance Handbook for Air Pollution Measurement Systems: Volume III, Stationary Source-Specific Methods, EPA Document 600/R-94/038c*.

Figure 7-1. Pitot Tube Inspection Sheet

S-Type Pitot Tube Inspection and Probe Thermocouple Calibration Check

Pitot ID: _____

Caliper ID: _____

Calibrated by	Initials		Reviewed by	Initials	
	Date			Date	

General Pitot Tube Alignment	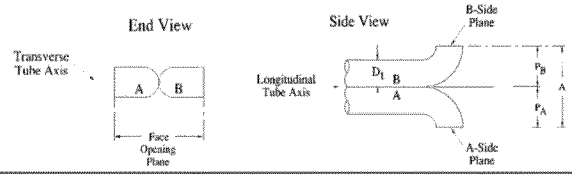	A = _____ ″ D_t = _____ ″ $0.188″ \le D_t \le 0.375″$? _____ (y/n) $1.05 \le A/2D_t \le 1.50$? _____ (y/n)
Misalignment	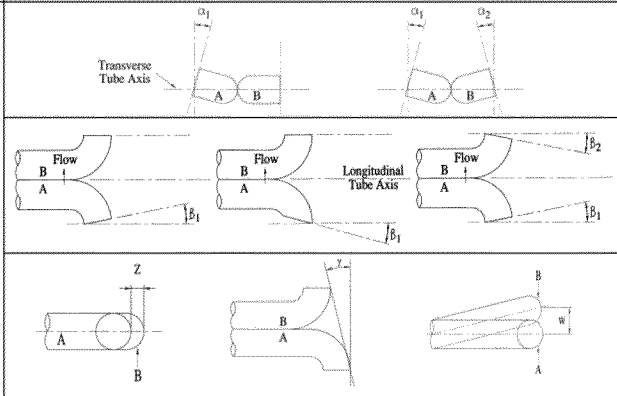	α_1 = _____ ° α_2 = _____ ° $\alpha_1 \le 10°$? _____ (y/n) $\alpha_2 \le 10°$? _____ (y/n) β_1 = _____ β_2 = _____ $\beta_1 \le 5°$? _____ (y/n) $\beta_2 \le 5°$? _____ (y/n) γ = _____ ° θ = _____ ° Z = A tan(γ) = _____ W = A tan(θ) = _____ $Z \le 0.125″$? _____(y/n) $W \le 0.031″$? _____(y/n)
Acceptability for Use (Circle Selection)	If all answers are "Y", this pitot tube is available for use, and may be assigned a correction factor of 0.84	If all answers except the first (D_t) are "Y", this pitot tube is available for use, but needs to be calibrated using a wind tunnel.	Any other situation, the pitot tube must be removed from service.

Probe ID: _____

Calibrated by	Initials		Reviewed by	Initials	
	Date			Date	

Stack Thermocouple Calibration [1]	**Reference Thermometer ID No.** [2] _____ T_F _____ °F $T_{abs,RT}$ _____ °R	**Thermocouple Readout ID No.** _____ T_F _____ °F $T_{abs,TC}$ _____ °R	**Compare thermocouple to reference thermometer** $\frac{T_{abs,TC}}{T_{abs,RT}} =$ _____ Is this between 0.985 and 1.015? ____(y/n)	**Calculate applicability range for thermocouple**	
				$Min_{abs} = 0.9 \times T_{abs,TC}$ _____ °R	$Min_F = Min_{abs} - 460$ _____ °F
				$Max_{abs} = 1.1 \times T_{abs,TC}$ _____ °R	$Max_F = Max_{abs} - 460$ _____ °F

[1] Per SOP 032, this calibration is generally performed at 160°F.
[2] $T_{abs,}$ (°R) = T_F (°F) + 460

CDS-15F: Pitot Tube Inspection, TC Calibration
Per EM SOP-009
Revision Date: March 2012

According to this procedure, three measurements of the inside diameter of the nozzle will be made on different cross sections. Using a caliper, measurements will be made to the nearest 0.001 inch. Nozzles will be considered acceptable if the difference between any two measurements is less than 0.004 inches. Nozzle calibrations are recorded on the field sampling data sheets. An example data sheet is presented as Figure 5-3.

7.3 Temperature Measuring Device Calibration

During source sampling, accurate temperature measurements are required. Thermocouple temperature sensors are calibrated at a single point against a NIST-traceable mercury-in-glass thermometer, and the linearity is confirmed using a traceable precision voltage generator. A temperature readout calibration data sheet is presented in Figure 7-2.

7.4 Dry Gas Meter and Orifice Calibration

Dry gas meters (DGMs) will be used in all sampling trains to monitor the sampling rate and to measure the sample volume. Critical orifices are used as calibration tools.

All dry gas meters will be calibrated before the departure of the equipment to the field and a documented correction factor at standard conditions will be assigned. Dry gas meters are calibrated against traceable critical orifices. A 5-point calibration (at five different orifices or flowrates) is performed on each dry gas meter every six months. A 3-point calibration is performed as a pre-test and post-test calibration check. The 3-point calibrations must agree within 5% of the 5-point calibration. A post-test calibration check will be performed as soon as possible after the equipment has returned from the field.

A positive pressure leak-check of the system will be performed prior to calibration. To perform the leak-check, the system will be placed under approximately ten inches of water pressure and a gauge oil manometer will be used to determine if the pressure decrease can be detected over a one-minute period. If leaks are detected, they will be eliminated before actual calibrations are performed.

Figure 7-2. Temperature Readout Calibration Data Sheet

Temperature Readout Calibration

Isokinetic Sampling Consoles

Readout ID Number _____ Calibrated by: _____

Reference Thermometer ID Number _____ Date _____

Voltage Generator ID Number _____ Reviewed by _____

Date _____

Temperature Readout Calibration [1]

Reference Thermometer (°F)	
Temperature Readout (°F)	
Was Readout adjusted?	☐yes ☐no

Temperature Readout Linearity Check

Channel	Voltage (mV)	Temperature (°F)			Channel	Voltage (mV)	Temperature (°F)		
		Theoretical	Observed	Difference [2,3]			Theoretical	Observed	Difference
1	0.0	32			4	-1.0	-10		
	1.0	77				0.0	32		
	3.0	165				1.0	77		
	5.0	251				2.0	121		
	7.0	341				3.0	165		
	10.0	475			5	-1.0	-10		
	15.0	692				0.0	32		
	20.0	905				1.0	77		
	30.0	1329				2.0	121		
	40.0	1772				3.0	165		
2	0.0	32			6	-1.0	-10		
	3.0	165				0.0	32		
	4.0	208				1.0	77		
	5.0	251				2.0	121		
	7.0	341				3.0	165		
3	0.0	32			7	-1.0	-10		
	3.0	165				0.0	32		
	4.0	208				1.0	77		
	5.0	251				2.0	121		
	7.0	341				3.0	165		

[1] Reference thermometer and readout must agree within 2°F.

[2] Difference is calculated as follows:

Difference = Observed - Theoretical

[3] Acceptable difference is ±5°F for temperatures below 1000°F and ±10°F for temperatures above 1000°F.

CDS-02 Temperature Readout
Per EM SOP-001
Revision Date: January 2012

Before calibration of a dry gas meter, the pump is allowed to run for five minutes after the sampling console is assembled and leak-checked. Once the pump and dry gas meter are warmed up, the critical orifice is attached, and air is pulled through the dry gas meter at the specified flowrate. After ten minutes, the valve is closed and the volume of gas read by the meter is compared to the volume of gas passing through the critical orifice. Duplicate calibrations are performed at each of the five flowrates. If necessary, additional maintenance and calibrations are conducted until the calibration results (Y_1) vary by no more than 2%. The average Y_1 is then calculated and recorded on the DGM calibration data sheet. An example DGM calibration data sheet is presented in Figure 7-3 and a post-test calibration check form is shown in Figure 7-4.

Figure 7-3. Dry Gas Meter Calibration Data Sheet

Five-Point Dry Gas Meter Calibration
(Against Critical Orifice)

Console ID _____

Thermometer ID _____

Calibrated by	Initials		Reviewed by	Initials		Leak Check	(+)	
	Date			Date			(-)	

			Run 1A	Run 1B	Run 2A	Run 2B	Run 3A	Run 3B	Run 4A	Run 4B	Run 5A	Run 5B
Critical Orifice	Identification Number											
	K Factor											
Subject DGM	DGM Initial Reading (ft^3)											
	DGM Final Reading (ft^3)											
	Temperature (°F)	Inlet Initial										
		Outlet Initial										
		Inlet Final										
		Outlet Final										
Test Time (minutes)												
Orifice Manometer, ΔH (" H_2O)												
Barometric Pressure (" Hg)												
Ambient Temperature (°F)												
Pump Vacuum (" Hg)												

Notes:

CD5-04 DGM 5 point against orifice
Per EM SOP-002
Revision Date: May 2011

Figure 7-4. Post Test DGM Calibration Data Sheet

Three-Point Dry Gas Meter Calibration
(Against Critical Orifice)
Console ID _____

Calibrated by	Initials		Reviewed by	Initials		Leak Check	(+)	
	Date			Date			(-)	

				Run 1A	Run 1B	Run 2A	Run 2B	Run 3A	Run 3B
DGM Calibration	Critical Orifice	Identification Number							
		K Factor							
	Subject DGM	DGM Initial Reading (ft^3)							
		DGM Final Reading (ft^3)							
		Temperature (°F)	Inlet Initial						
			Outlet Initial						
			Inlet Final						
			Outlet Final						
	Test Time (minutes)								
	Orifice Manometer, ΔH (" H_2O)								
	Barometric Pressure (" Hg)								
	Ambient Temperature (°F)								
	Pump Vacuum (" Hg)								

Temperature Readout Calibration	Check the readout against a NIST Thermometer		Check the readout linearity (one channel only)			
	NIST Thermometer ID _____		Voltage Supply ID _____		Channel No _____	
	Thermometer Reading (°F)		Voltage (mv)	Theoretical (°F)	Observed (°F)	Difference (°F)
	Readout Reading (°F)		0	32		
			1	77		
			3	165		
			7	341		
			15	692		

CDS-05 DGM Calibration, 3 point vs orifices
Per EM SOP-003
Revision Date: May 2011

8.0 Analytical Procedures

Samples collected during the field test effort will be analyzed for the parameters specified in Table 8-1. Analyses of the stack gas, waste feed, and spiking solutions samples will be performed by Test America Laboratories in Knoxville, TN. This section describes the analytical methods that will be employed for the parameter and sample matrix. Most of the methods are standard reference methods with any modifications to the methods appropriately explained and detailed. Test America Laboratories – Knoxville Standard Operating Procedures (SOPs) are included in Appendix E for all of the analyses to be performed in this CPT.

8.1 Analysis of Stack Gas Samples for Particulate Matter

Samples for determination of particulate matter in the stack gas will be collected in a sampling train meeting the requirements of EPA Method 5, as described in Section 5.2.3. The acetone wash from the nozzle, probe liner, and glassware prior to the filter on the Method 5 sampling trains will be evaporated and desiccated and the mass will be determined using an analytical balance. The filter from the Method 5 sampling train is desiccated and weighed to determine the mass of particulate present on the filter. The weight gain of the filter and evaporated acetone wash are summed as the particulate catch.

The analytical balance will be calibrated daily, prior to weighing, using a standard set of weights and an internal calibration weight. Measured values of the standards must agree to as follows:

- The 5g weight must be within 0.1 mg of the true value;
- The 50g weight must be within 0.3 mg of the true value; and
- The 100 g weight must be within 0.5 mg of the true value.

Balance calibration data will be recorded in the laboratory notebook.

Table 8-1. Summary of Analytical Methods

Parameter	Stream	Analytical Method
Particulate Matter	Stack Gas	Gravimetric - EPA Method 5
HCl/Cl_2	Stack Gas	IC - EPA Method 26A
Metals[1]	Stack Gas Waste Feed, Spiking Solutions	ICPES - SW-846 Method 6010B; CVAAS - Hg, SW-846 Method 7470A ICPES - SW-846 Method 6010B; CVAAS - Hg, SW-846 Method 7471A
Dioxins/Furans	Stack Gas	HRGC/HRMS - SW-846 Method 8290A
Ash	Waste Feed	ASTM Method D-482
Total Chlorine	Waste Feed	SW-846 Methods 5050 and 9056A
Moisture	Waste Feed	ASTM E-203 or D-4017 (Karl-Fischer titration) for liquid waste ASTM D-5142 or D-160.3(loss on drying) for solid waste
Calorific (Heating) Value	Waste Feed	ASTM Method D-5865 or D-240
Density	Waste Feed	ASTM Method D-1475
Viscosity	Waste Feed	ASTM Method D-445

[1] Analysis is for As, Be, Cd, Cr, Pb, and Hg in the Stack Gas and Waste Feeds. Spiking Solutions analyzed only for the targeted spiking metal.

8.2 Analysis of Stack Gas Samples for Hydrogen Chloride/Chlorine

Samples for the determination of hydrogen chloride (HCl) and chlorine (Cl_2) in the stack gas will be collected using a modified application of EPA Method 26A, proposed and approved by EPA Region 5, in the second part of each test run. According to EPA Method 26A, sampled gas is collected isokinetically at a series of traverse points, filtered, and bubbled through a series of impingers. In the Modified Method 26A, sampled gas is collected isokinetically, but at a single point located in the center of the stack. As described in Sections 5.2.4, the sampling train is recovered to provide a rinse of the transfer line and contents and rinses of the acidic impingers (and optional knockout impinger) for determination of hydrogen chloride; and the contents and rinses of the alkaline impingers for determination of chlorine. Both are analyzed for chloride by ion chromatography (IC) for determination of chloride. The chloride found in the acid impingers (and rinses) is reported as HCl, and the chloride determined in the alkaline impingers (and rinses) is reported as Cl_2. In ion chromatography, the ions in solution are separated by an ion exchange column and detected conductimetrically. Sodium thiosulfate will be added to the collected alkaline impinger sample in the analytical laboratory before analysis.

The IC will be calibrated for each sample set analyzed. This is accomplished by introducing different standard concentrations of chloride into the instrument and measuring the response for each concentration. Calibration standards will be prepared from certified standards.

A minimum of four standard concentrations for each analyte will be used to generate a calibration curve. The calibration curve is considered acceptable if the correlation coefficient is greater than 0.995.

According to Method 26A, each sample will be analyzed in duplicate.

The analysis performed by Test America will deviate from Method 26A as follows:

- Method 26A states to analyze a calibration curve both before and after sample analysis. The laboratory will perform a single calibration prior to sample analysis, as described in SW-846 Method 9056.
- The matrix matching of calibration standards for H_2SO_4 and NaOH impingers described in Method 26A will not be performed. The impinger solutions are diluted during sample collection, and the concentration of acid/base in the impingers does not match the initial matrix.

8.3 Analysis of Stack Gas Samples for Metals

Samples of the stack gas collected using EPA Method 29, will be analyzed for five metals using Method 6010B from SW-846, including arsenic (As), beryllium (Be), cadmium (Cd), chromium (Cr), and lead (Pb). Method 6010B uses an inductively coupled plasma emission spectrometer (ICPES). Mercury (Hg) will be determined using Method 7470A of SW-846, a cold vapor atomic absorption spectrometry (CVAAS) technique.

Samples for determination of metals in stack gas will be collected in an EPA Method 29 sampling train, as described in Section 5.2.5. The target metals and respective detection limits are specified in Table 8-2. Six separate fractions are recovered from the Method 29 sampling train and submitted to the laboratory for analysis:

- Nitric acid probe and nozzle rinse;
- Filter;
- Contents of knock-out impinger and HNO_3/H_2O_2 impinger (and rinses);
- Rinse of empty impinger between the HNO_3/H_2O_2 impingers and the $H_2SO_4/KMnO_4$ impinger;
- Contents (and rinses) of $H_2SO_4/KMnO_4$ impingers; and
- HCl rinse of $H_2SO_4/KMnO_4$ impingers.

The filter from the multiple metals sampling train will be combined with the probe and nozzle rinse and digested using hydrofluoric acid (HF), HCl, and HNO_3 in a microwave-assisted process. This fraction (the front half) will be analyzed for all target metals. The knock-out impinger and HNO_3/H_2O_2 impingers (combined in the field) will be combined and have an aliquot removed for analysis of mercury before concentration and analysis for other metals.

The remaining three fractions will be analyzed for mercury. In all cases, the analytical methodology is specified in Method 29. Mercury analysis will be conducted using Method 7470A, cold vapor atomic absorption, and analysis for all other metals will be conducted using Method 6010B, inductively coupled plasma emission spectroscopy (ICPES).

Table 8-2. Target Analytes for Determination of Metals

Metal	Analytical Method	Stack Emission Target Detection Limit [1,2] ($\mu g/m^3$)
Arsenic (As)	SW-846 Method 6010B	0.46
Beryllium (Be)	SW-846 Method 6010B	0.19
Cadmium (Cd)	SW-846 Method 6010B	0.078
Chromium (Cr)	SW-846 Method 6010B	0.39
Lead (Pb)	SW-846 Method 6010B	0.35
Mercury (Hg)	SW-846 Method 7470A (stack) SW-846 Method 7471A (waste)	1.40

[1] Based on recent data from Test America-Knoxville, and a gas sample volume of 45 dscf.

[2] If analytical interferences are present, samples will be diluted, which will raise analytical detection limits.

8.4 Analysis of Stack Gas Samples for Dioxins/Furans

Samples of the stack gas for determination of dioxins/furans will be collected according to SW-846 Method 0023A, as described in Section 5.2.6. The target analytes for dioxins/furans analysis are presented in Table 8-3.

Analysis for dioxins/furans will be performed using high-resolution capillary column GC/MS in accordance with SW-846 Method 8290A. This method uses matrix specific extraction and analyte specific cleanup techniques for sample preparation. Calibration of the GC/MS will be accomplished with internal standards and calibrating solutions. Acceptance criteria as outlined in the method will be met before any samples are analyzed.

As described in Section 5.1.6, the sampling train is recovered to provide the following fractions:

- Probe and nozzle rinse of all glassware between the nozzle and filter with acetone, methylene chloride and toluene;
- Filter;
- Mid-train rinse of all glassware between the filter and sorbent with acetone, methylene chloride, and toluene; and
- XAD sorbent.

Table 8-3. Target Analytes for Determination of Dioxins/Furans

Analyte
2,3,7,8-TCDD
1,2,3,7,8-PeCDD
1,2,3,4,7,8-HxCDD
1,2,3,6,7,8-HxCDD
1,2,3,7,8,9-HxCDD
1,2,3,4,6,7,8-HpCDD
OCDD
2,3,7,8-TCDF
1,2,3,7,8-PeCDF
2,3,4,7,8-PeCDF
1,2,3,4,7,8-HxCDF
1,2,3,6,7,8-HxCDF
2,3,4,6,7,8-HxCDF
1,2,3,7,8,9-HxCDF
1,2,3,4,6,7,8-HpCDF
1,2,3,4,7,8,9-HpCDF
OCDF

The recovered fractions will be combined to provide two extracts for analysis:

- Combination of the filter and all the rinses between the nozzle and filter; and
- Combination of the sorbent and all the rinses between the filter and sorbent.

After sample cleanup and concentration procedures at the analytical laboratory, an aliquot of the front-half extracts (i.e., probe and nozzle rinse and filter) will be combined and analyzed for dioxins/furans separate from the back-half components (i.e., mid-train rinse and XAD sorbent). The samples will be analyzed according to SW-846 Method 8290A. The analytical protocol includes quantitation of all dibenzodioxins and dibenzofurans including four or more chlorine atoms. The method provides congener class definition for each of the five congener groups (tetra-, penta-, hexa-, hepta-, and octa-). In addition, each individual isomer containing the 2,3,7,8-substitution pattern will be individually quantified.

8.5 Analysis of Waste Feeds and Spiking Solutions

As described in Section 5.3, samples of waste feeds will be collected during each test period.

Liquid and solid waste feed samples collected during the Method 29 stack sampling will be analyzed for six metals. Five of the metals will be analyzed by trace level inductively coupled argon plasma emission spectroscopy (ICPES) using SW-846 Method 6010B. Samples will be

prepared for analysis using SW-846 Method 3050B. The metals to be analyzed are arsenic (As), beryllium (Be), cadmium (Cd), chromium (Cr), and lead (Pb). Waste feed samples will be analyzed for mercury (Hg) by cold vapor atomic absorption spectroscopy (CVAAS) using Method 7471A of SW-846. The target species for metals analysis are presented in Table 8-2.

All of the composite liquid waste feed samples will be analyzed for: calorific value, ash, moisture, total chlorine/chloride, and density and viscosity.. All of the composite solid liquid waste feed samples (containerized and bulk) will be analyzed for: calorific value, ash, moisture, total chlorine/chloride.

The samples are analyzed for the following parameters, by the referenced standard methods:

- Ash – ASTM Method ASTM D-482;
- Total chlorine – SW-846 Methods 5050 and 9056A;
- Moisture - ASTM Method E-203 or D-4017(Karl-Fischer titration) for liquid waste; ASTM Method D-5142 or D-160.3 (loss on drying) for solid waste;
- Calorific value – ASTM Method D-5865 or D-240;
- Density – ASTM Method D-1475; and
- Viscosity – ASTM Method D-445.

Analytical results for the waste feed samples will be reported on an *as-received* or *wet weight* basis. Samples of the waste feed will not be dried prior to analysis.

Samples of the spiking solutions of chromium and mercury will be analyzed for the target metal (i.e., chromium or mercury). The samples of the chromium spiking solution will be analyzed for chromium by trace level inductively coupled argon plasma emission spectroscopy (ICPES) using SW-846 Method 6010B. The samples of the mercury spiking solution will be analyzed for mercury (Hg) by cold vapor atomic absorption spectroscopy (CVAAS) using Method 7471A of SW-846.

Prior to analysis, the chromium and mercury spiking solutions will be diluted into the calibration range of the respective instrument used for analysis. With the delivery of the samples of the spiking solutions, the analytical laboratory will be informed of the approximate, target concentration of the target analyte to prevent possible over-ranging and contamination of the analytical instruments.

9.0 Internal Quality Control Checks

Specific QC procedures will be followed to ensure the production of useful and valid data for the Comprehensive Performance Tests of the three Veolia Sauget incinerators. Standard reference methods for sampling and analysis are detailed in Sections 4.0 and 8.0 of this document. QC procedures will be followed as described in these referenced methods. Strict adherence to prescribed procedures is quite often the most applicable QC check. This section describes procedures that are specific to this test and sets a schedule for collection of QC samples used to assess data quality.

Table 9-1 presents a summary of specific QC samples and activities planned to assess overall measurement data quality. These include:

- Field and media blanks;
- Matrix spike and matrix spike duplicate samples;
- Laboratory control duplicate samples; and
- Surrogate spikes.

Field blanks for stack gas samples will be prepared by recovering assembled trains that have been treated as other trains except that no stack gas will be passed through the blank trains. Media blanks consist of sampling media that are stored and shipped from the facility and handled as ordinary samples, but are never assembled in trains. Trip blanks collected will not be analyzed unless needed to identify sources of contamination found in the field or trip blank samples.

Matrix spike/matrix spike duplicate (MS/MSD) samples will be prepared by spiking sample splits with known concentrations of target analytes. The MS/MSD compounds and acceptance criteria are specified in the methods. Matrix spike results will provide a measure of the effectiveness of the method, in terms of analyte recovery (accuracy), in the actual sample matrices. Matrix spike duplicate results provide a measure of variability, much like field or analytical duplicate samples, but at a predictable concentration.

Table 9-1. Summary of Sampling and Analytical QC Requirements[1]

	Field Blank[2]	Trip Blank[3]	Break-Through	Duplicate Sample or Analysis[4,5]	MS/ MSD[6]	LCS/LCSD	Surrogate Spike
Particulate Matter (EPA Method 5)							
Stack Gas	1	1					
HCl/Cl_2 (Modified Method 26A)							
Stack Gas	1	1		All	1	1	
Dioxins/Furans (SW-846 Method 0023A)							
Stack Gas	1	1				1	All
Metals (EPA Method 29)							
Stack Gas	1	1			1	1	
Waste Feeds				1	1	1	
Composition							
Waste Feeds				1	1[7]		

[1] Table indicates number of QC samples planned for the Comprehensive Performance Test, unless otherwise indicated.

[2] Field blanks for gas samples are recovered from assembled trains that have been leak checked but through which no gas sample has passed.

[3] Trip blanks consist of applicable filters, sorbents, and solutions. These will be analyzed only if necessary based on field blank analysis results.

[4] Field duplicates will be collected as duplicate sets of subsamples used to prepare the composite sample.

[5] Field duplicate will be collected of the liquid waste only in the CPT of each unit during the Method 29 sampling.

[6] Matrix spiked samples will be spiked prior to sample preparation (digestion/extraction), except for metals train samples, which will be spiked following digestion.

[7] MS/MSD for chlorine only.

Matrix spike/matrix spike duplicate (MS/MSD) samples will be prepared by spiking sample splits with known concentrations of target analytes. The MS/MSD compounds and acceptance criteria are specified in the methods. Matrix spike results will provide a measure of the effectiveness of the method, in terms of analyte recovery (accuracy), in the actual sample matrices. Matrix spike duplicate results provide a measure of variability, much like field or analytical duplicate samples, but at a predictable concentration.

Surrogate spiked samples are used to monitor method performance for GC methods. A discussion of sampling and analytical QC checks to be implemented during this program is presented below.

9.1 Sampling Quality Control Checks

A sampling matrix that shows the sampling method, frequency, compositing approach, and analytical parameters for each sample stream is presented in Section 5.0. QC procedures associated with the sampling of the stack gas are described in the cited methods and summarized briefly below, along with specific procedures pertinent to this test.

9.1.1 Stack Gas Sampling

Prior to actual sampling on site, all of the applicable sampling equipment will be thoroughly checked to ensure that each component is clean and operable. A file of the equipment calibration data forms will be compiled and reviewed for completeness and adequacy to ensure the acceptability of the equipment. Sampling equipment calibration is described in Section 6.0. All glassware used in sampling trains will be cleaned before transport to the plant. This includes soap and HPLC water washing, as well as a 4-hour soak in a solution of 10% nitric acid. In addition, all glassware is rinsed on site with the recovery solution for that train before the assembly of a particular train. Upon arrival on site, the equipment will be unloaded, inspected for possible damage, and then assembled for use. Any damaged or faulty equipment will be tagged and removed from service until it can be repaired.

For all stack gas sampling, reagent grade solutions, including HPLC water, will be used for sample recoveries.

The following QC checks are generally applicable to source sampling techniques. If any corrective actions are taken in response to results for these QC checks or in response to supervisor review of QC procedures, the corrective action taken will be documented in the field.

The specific actions shown below follow good sampling practice and are a result of close adherence to the methods:

- Each sampling train will be inspected visually for proper assembly before every use.
- Assembly and recovery of the sample trains will be performed in a clean environment.
- All cleaned glassware, hardware, and prepared sorbent traps will be kept closed with caps (Teflon or stainless steel), precleaned foil, or Teflon film until assembly of the sample train in the field. The sorbent traps will be immediately re-capped when the train is disassembled.
- The numbers and locations of the sampling traverse points will be checked before taking measurements.
- The inclined oil manometer used to indicate the differential pressure (ΔP) across the Type-S pitot tube will be leveled and zeroed.

- The temperature measurement system will be checked visually for damage and operability by measuring the ambient temperature.
- Prior to sampling, calculations will be made to determine the proper size nozzle required for isokinetic sampling.
- The sampling nozzle will be inspected visually for damage before and after each run.
- The Type-S pitot tube will be inspected visually for damage before and after each run.
- During sampling, the roll and pitch axis of the Type-S pitot tube and the sampling nozzle will be properly maintained.
- Handling of the filters will be performed in clean areas out of drafts. Teflon-coated tweezers will be used at all times to transfer the filters.
- The field balance will be checked daily against standard weights to read within ±0.5% of the standard, or a calibration curve will be prepared for the balance. This will be documented in the field logbook.
- Any unusual conditions or occurrences will be noted on the appropriate data form during each run.
- The sampling train will be purged prior to sample collection. This will occur during the leak-checking operation and will be documented on the sampling data sheet.
- The sampling probe will be sealed properly to prevent air in-leakage.

The following activities have to do with preparation and use of material for sampling:

- All reagents will be prepared and stored according to the recipes provided in the methods.
- Separate dispensing containers will be assigned to each reagent to prevent cross-contamination.
- Sample filters will be inspected for pin-holes, tears, or other compromising conditions before use.

The following activities will be documented on the pre-printed data sheets:

- All sampling data will be recorded on standard data forms that will serve as pre-test checklists.
- Each leg of the Type-S pitot tube will be leaked-checked before and after each run.
- Dry gas meter readings, ΔP and ΔH readings, temperature readings, and pump vacuum readings will be made properly while sampling at each traverse point.
- The sampling trains will be leak-checked before and after each run. If a sampling train is moved from one sampling port to another during a run, the train will be leak-checked between ports.

- Ice will be maintained in the ice bath throughout each run.
- Filters and sorbent traps will be maintained at the proper temperature throughout the test run.
- Impingers will be weighed to the nearest 0.1 gram before and after sampling, as needed for moisture determination.

The following activities are specified and will be performed:

- A cyclonic flow check of the stack gas (both stack traverse diameters) will be performed prior to sampling to verify the absence or presence of cyclonic flow.
- A field blank will be collected by assembling and recovering one complete sampling train. The blank sample train will be leak-checked at the sampling location. No gaseous sample will be passed through the sampling train. A sampling data sheet will be filled out for the blank sample. It will be treated as an actual sample, except that no stack gas will be sampled.
- Reagent blanks consisting of sampling media that have been either prepared or transported to the site will be collected and will be analyzed in the event of suspected contamination. These samples will be assigned log numbers and will appear in the logbook and on the chain-of-custody forms.
- Isokinetic sampling will be achieved within ±10%. Calculations of isokinetics will be performed on site, as quickly as possible after sampling is concluded.
- QC procedures specific to each sampling method are discussed in the following sections.

EPA Method 5 and Modified EPA Method 26A

Particulate matter will be determined in the stack gas according to EPA Method 5, and hydrogen chloride/chlorine will be determined in the stack gas using a modified application of EPA Method 26A, as described above. The probe and filter holder in Method 5 will be maintained at a temperature between 223 and 273°F. The probe and filter holder in Modified Method 26A will be maintained at a temperature between 248 and 273°F. The methods require that the leakage rate at the end of the run not exceed 0.02 cubic feet per minute. Final leak checks will be performed to confirm this. In addition, leak checks will be performed before the test, during port change, and any time a component is changed out. A component change-out may be replacement of a filter or impinger, or just emptying an impinger. All leak checks will be recorded on the sampling data sheet.

Results for HCl/Cl_2 will also be reported combined as—chloride equivalents|| to meet requirements of the HWC MACT.

Isokinetic sampling will be maintained within ±10%. A field blank will be collected in each CPT of both sampling trains, prepared by assembling and leak testing a sample train, but without drawing any gas through the system.

EPA Method 29

Metals will be determined in the stack gas during the test using EPA Method 29. The probe and the filter holder will be maintained at 248 ±25°F. The method requires that the leakage rate at the end of the run not exceed 0.02 cubic feet per minute. Final leak checks will be performed to confirm this. In addition, leak checks will be performed before the test, during port change, and any time a component is changed out. A component change-out may be replacement of a filter or impinger, or just emptying an impinger. All leak checks will be recorded on the sampling data sheet.

Isokinetic sampling will be maintained within ±10%. A field blank will be collected in each CPT, prepared by assembling and leak testing a sample train, but without drawing any gas through the system.

SW-846 Method 0023A

SW-846 Method 0023A sampling trains will be collected and analyzed for dioxins/furans. The probe liner and filter holder temperatures will be maintained at 248±25°F. The temperature of the gas entering the XAD-2 sorbent trap shall not exceed 68°F. The system will be leak-checked before and after each run to ensure leakage rates of less than 0.02 cfm. If leakage rates exceed this limit, sample volumes will be adjusted accordingly, as described in the methods. Isokinetic sampling will be maintained within ±10 percent.

A field blank will be collected in each CPT, prepared by assembling and leak testing a sampling train, but without drawing any stack gas through the system. An XAD-2 media blank will be prepared and retained for possible analysis.

Continuous Emission Monitoring

Total hydrocarbons (THC), O_2, and CO_2 will be monitored in the stack gas during the test using EPA Methods 25A and 3A, respectively. QC procedures include the following:

- Calibration per the manufacturer's specification;
- Use of calibration gases of appropriate range;
- Use of documented, traceable standards;
- Performance of calibration error checks; and
- Performance of zero and upscale drift checks.

9.1.2 Waste Sampling

Liquid samples will be collected using the tap sampling procedures specified in EPA Method S-004. Liquid samples will be composited according to the schedule indicated in Section 5. Solid stream samples will be collected using the scoop sampling procedures specified in EPA Method S-007.

Liquid sampling QC procedures will include the following:

1. The sample tap will be flushed each time before sample is collected.
2. Each sample will be collected in a new bottle.
3. A pre-printed data sheet will be used.

Solid waste sampling QC procedures will include the following:

1. A dedicated scoop will be used for the sampling location or waste material.
2. Each sample will be collected in a new bottle.
3. A pre-printed data sheet will be used.

During the second part of the test, samples of the chromium spiking solution (i.e., solution of chromic acid) and the mercury spiking solution (i.e., solution of mercuric nitrate contained in vials fed with containerized solids) will be collected at the beginning, middle (at port change), and end of the collection of the Method 29 sampling train. Each of the three samples collected of the liquid chromium and the liquid mercury spiking solutions will be analyzed. These analytical results will be used to confirm the concentrations of chromium and mercury in the spiking materials fed during the CPT. Records of the addition of the amount of (solid) mercuric nitrate and the volume of water used in the preparation of the solution of mercuric nitrate will be used in the determination of the spiking rate of mercury. The Certificate of Analysis of the procured chromic acid will be used in the determination of the spiking rate of chromium.

Grab samples of the lead (i.e., lead nitrate) and chlorine (i.e., hexachloroethane and/or PVC) spiking materials will be collected at the beginning, middle (at port change), and end of the collection of the Method 29 sampling train in the second part of the test. Samples of the lead and chlorine spiking materials will be archived. Certificates of Analysis of the procured lead nitrate and hexachloroethane and/or PVC will be used in the determination of the spiking rates of lead and chlorine.

A fourth sample of the chromium and mercury spiking solutions and the lead and chlorine spiking materials will be collected in each run of the second part of the test at the end of the Method

0023A sampling for dioxins/furansThe fourth samples of the chromium, mercury, lead, and chlorine spiking materials and solutions will be archived.

9.2 Analytical Quality Control Activities

A summary of analytical methods to be used for each parameter and sample stream is presented in Section 8.0 of this document. Analytical QC procedures will be followed as described in the referenced methods. This section presents a summary of QC checks used to control method performance within acceptable limits and provides details or modifications specifically designed to assess precision and accuracy in the actual sample matrices. Test America Laboratories in Knoxville, TN will be performing all of the analyses for the subsequent CPT, and will perform the quality control analyses, and the analysis of any audit samples.

9.2.1 QC for Determination of Particulate Matter in Stack Gas

Samples of the stack gas for determination of particulate matter will be collected using a sampling train meeting the requirements of EPA Method 5. These samples will be analyzed by Test America Knoxville for total weight gain, by gravimetric analysis. This will be done according to the procedures in EPA Method 5. All method QA/QC activities and requirements will be followed and met.

9.2.2 QC for Determination of Hydrogen Chloride/Chlorine in Stack Gas

Concentrations of hydrogen chloride/chlorine in stack gas will be determined by measuring the chloride ion concentration in the acidic and caustic impinger solutions from the Modified Method 26A sampling train. The analysis will be performed by ion chromatography, according to Method 26A. In addition to routine analytical method QC requirements (which include duplicate analysis of all samples) an MS/MSD will be performed on splits of one sample from each CPT to assess accuracy and precision in the sample matrix. Two splits of the samples will be spiked identically with chloride at appropriate levels.

A summary of routine analytical QC checks for these methods is presented in Table 9-2.

Accuracy and precision estimates will be calculated from matrix spike recoveries. Note that the method requirement for duplicate analysis is repeated measurements within 5% of the mean, with a corrective action of analysis of another duplicate pair. For this test, the requirement has been defined as RPD <10%, with the determination of a third value.

Table 9-2. Summary of QC Checks for Hydrogen Chloride/Chlorine Analysis[1]

Quality Control Check	Frequency	Acceptance Criteria	Corrective Action [2]
Multipoint calibration	Daily	R ≥ 0.995	Repeat calibration
QC check sample	Every 10th analysis	± 10% error	Repeat calibration
Method blank	One per batch	< RL	Determine source of contamination Re-analyze affected samples
Laboratory Control Sample	Once per batch	90-110% recovery	1) Reanalyze LCS 2) If 1) fails; reanalyze samples
Duplicate analyses	All samples	RPD <10%	1) Run and report third analysis
Matrix spike/Matrix spike duplicate	Once per condition	75-125% recovery	Flag data

[1] Analysis to be performed by Test America Knoxville.

[2] All corrective action will be noted on laboratory reports and discussed in the QA/QC section of the final report.

9.2.3 QC for Determination of Metals in Stack Gas and Waste

Samples of the stack gas collected using EPA Method 29, will be analyzed for arsenic (As), beryllium (Be), cadmium (Cd), chromium (Cr), and lead (Pb) using Method 6010B from SW-846. Method 6010B uses an inductively coupled plasma emission spectrometer (ICPES). Mercury (Hg) will be determined using Method 7470A of SW-846, a cold vapor atomic absorption spectrometry (CVAAS). Samples of the waste feeds will be analyzed for the same six metals using Method 6010B and Method 7471A. A duplicate sample of the liquid waste feed will be prepared in one run of the test of each unit and analyzed for metals and compositional parameters. Samples of the chromium and mercury spiking solutions will be analyzed for chromium and mercury, respectively. A summary of the QC procedures for analysis of metals is presented in Table 9-3.

Table 9-3. Summary of QC Checks for Metals Analysis[1]

Parameter	Quality Control Check	Frequency	Acceptance Criteria	Corrective Action [2]
Metals (ICPES), except Hg	Initial mixed standard calibration	Daily, prior to analysis	Measured value for the initial calibration verification is within 10% of expected value	Repeat calibration
	Calibration check sample	Following calibration; 10% during sample analysis	Within 10% of expected value	Evaluate system; recalibrate
	Calibration blank	10%	< reporting limit	Repeat; evaluate system; recalibrate
	ICP interference check	Run at beginning and end of daily run	80-120% of true value	Repeat calibration
	Method Blank	1 per batch of maximum 20 samples	< reporting limit	Flag data
	Laboratory Control Sample	1 per batch of maximum 20 samples	80-120% recovery	Flag data
	Post Digestion Spike/Post Digestion Spike Duplicate	1 per batch of maximum 20 samples	75-125% recovery	Flag data
	MS/MSD	1 per batch of maximum 20 samples	20% RPD; 70-130% recovery	Flag data; notify lab project manager
Mercury (CVAAS)	Multi-point calibration plus zero	Daily, prior to analysis	Correlation coefficient >0.995	Repeat calibration.
	Calibration check	Following calibration; 10% during sample analysis	Recovery between 80 – 120%	Repeat calibration.
	Calibration blank	10%	< reporting limit or 1/10th the lower samples level	Repeat; evaluate system; recalibrate
	Method Blank	1 per batch of maximum 20 samples	< reporting limit	Flag data
	Laboratory Control Sample	1 per batch of maximum 20 samples	80-120% recovery	Flag data
	Post Digestion Spike/Post Digestion Spike Duplicate	1 per batch of maximum 20 samples	80-120% recovery	Flag data
	MS/MSD	1 per batch, max 10 samples per batch	20% RPD; 75-125% recovery	Flag data; notify lab manager; notify QA officer

[1] Analysis to be performed by Test America Knoxville.

[2] All corrective action will be noted on laboratory reports, and discussed in the QA/QC section of the final report.

9.2.4 QC for Determination of Dioxins/Furans in Stack Gas

The concentration of polychlorinated dibenzodioxins and dibenzofurans (dioxins/furans) in the stack gas will be determined by analysis of the recovered components of the SW-846 Method 0023A sampling train. Samples will be analyzed for dioxins/furans using HRGC/HRMS according to SW-846 Method 8290A. A summary of method QC checks is presented in Table 9-4.

Table 9-4. Summary of Analytical QC Checks for Dioxins/Furans Analysis[1] by HRGC/HRMS

Quality Control Check	Frequency	Acceptance Criteria	Corrective Action [2]
Mass Resolution Check	Daily	10,000 resolution	Adjust
GC Column Performance Check	At beginning of 12-hour shifts	≤25% valley	Recalibrate or column maintenance
Initial Calibration	Prior to analyzing samples.	≤25 or 30% RSD for multi-point calibration. See Table 5 in Method 23. [3] Ion ratios between 0.65 and 1.78. See Method 23, Table 4. [3]	Perform repairs, maintenance, or adjustments, repeat.
Calibration/Retention Time Window Check	At beginning of 12-hour shifts	1st and last eluters within window.	Adjust group times
Continuing Calibration	At beginning of 12-hour shifts	Within 25 or 30% of relative response factor from initial calibration. See Table 5 in Method 23. [3]	Adjust and re-analyze Continuing Calibration Standard
Method Blank [4]	At beginning of 12-hour shifts	Less than the lowest calibration standard	Re-analyze all positive samples in batch
Internal Standards	All samples	40-130% recovery for tetra, penta- and hexa-substituted species. 25-130% recovery for hepta- and octa-substituted species.	Flag Data
Ongoing Precision Recovery	Once per Batch	70-130% Recovery	Flag Data
Surrogate Spiking	All samples	70-130% recovery for all five surrogates	Flag Data

[1] Analysis to be performed by Test America Knoxville.

[2] All corrective action will be noted on laboratory reports and discussed in the QA/QC section of the final report.

[3] Refer to method for specific isomers.

[4] Method blank consists of an extraction of clean XAD, taken through concentration and analysis.

9.2.5 QC for Determination of Composition

Samples of the waste feeds will be analyzed for ash, total chlorine, moisture, heating value, viscosity, and density using EPA and ASTM standard methods. The measurement parameters and corresponding reference methods are listed in Section 8 of this document. Routine QC procedures as defined in the methods will be followed for all analyses. This usually includes the analysis of a standard reference material to determine recovery and demonstrate the method performance. A duplicate sample of the liquid waste feed will be prepared in one run of the test of each unit and analyzed for metals and compositional parameters. The QC procedures for the compositional analyses are presented in Table 9-5.

Table 9-5. Summary of Analytical QC Checks for Analysis of Waste Feed Samples for Heating Value, Density, Ash, Viscosity, Total Chlorine, and Moisture [1,2]

Parameter	Quality Control Check	Frequency	Acceptance Criteria	Corrective Action [3]
Heating Value	Initial Calibration—running average of 10 daily calibration standards	Prior to analysis	%RSD <1%	Correct problem; add standards until %RSD criterion is met.
	Calibration Check Standard (also added to running list of 10 previous calibrations)	Daily	%Difference <1%	Correct problem, retest
	Laboratory Control Sample (LCS)	One per sample batch of up to 20 samples	98-102% of accepted value.	Retest. If the re-test fails, correct the cause and retest all samples.
	Laboratory Control Sample Duplicate (LCSD)	One per sample batch of up to 20 samples	RPD ≤2.0%.	Retest. If the re-test fails, correct the cause and retest all samples.
	Laboratory Duplicate	One per sample batch of up to 20 samples or one per CPT.	RPD ≤10.0%.	Flag the data, note in narrative.
Density	Pycnometer Calibration	Prior to use	3 Measurements, %RSD < 0.5%	Repeat Calibration
	Calibration Check	Daily	Pycnometer Mass Difference < 0.01g	Recalibrate
	Laboratory Control Sample (LCS)	One per sample preparation batch of up to 20 samples.	Percent accuracy within 99-101%	Determine cause and reanalyze all associated samples.
	Analytical Duplicate	One every 10 samples (minimum one per CPT).	RPD ≤10%	Flag the data.
Viscosity	Calibration Check Sample	Before sample analysis begins, analyze one calibration check standard per batch of up to 20 samples, for each viscometer used in the batch.	Percent difference ≤1%.	Correct the problem. Obtain an acceptable result before beginning sample analysis.
	Analytical Duplicate	One every 10 samples (minimum one per CPT). Duplicate samples should be performed using different, but same size viscometers, if available.	RPD ≤10%	Flag the data.

Table 9-5. (continued) Summary of Analytical QC Checks for Analysis of Waste Feed Samples for Heating Value, Density, Ash, Viscosity, Total Chlorine, and Moisture [1,2]

Parameter	Quality Control Check	Frequency	Acceptance Criteria	Corrective Action [3]
Ash	Laboratory Method Blank (LMB)	Every 20 samples or once per sample batch.	The result must be less than the RL. **Exception**: If all sample results are greater than 10x the blank concentration or less than the RL, do not reanalyze.	Return all of the samples to the muffle furnace and re-fire them. Re-weigh after cooling.
	Laboratory Control Sample (LCS)	Every 20 samples or once per sample batch.	90-110% recovery	Re-fire all associated samples and reanalyze if recovery exceeds upper limit. If recovery is less than lower limit, terminate analysis and reanalyze all associated samples.
	Laboratory Control Sample Duplicate	Every 20 samples or once per sample batch.	RPD ≤ 10 %	Re-fire all associated samples and reanalyze. If RPD value continues to exceed 10%, reanalyze all related samples.
	Laboratory Duplicate	Every 10 samples, once per sample batch. Once for each CPT project.	RPD ≤ 10 % of mean value.	Flag data.
Total Chlorine	Method Blank	One per sample preparation batch of up to 20 samples.	The result should be less than or equal to the RL. Sample results greater than 20x the blank concentration or samples for which the contaminant is < RL do not require reprep.	Reprep and reanalyze samples.
	Laboratory Control Sample (LCS)	One per sample preparation batch of up to 20 samples.	80-120% Recovery	Reprep and/or reanalyze all samples associated with the LCS.
	Laboratory Duplicate	One per sample preparation batch of up to 10 samples. (Minimum one duplicate per CPT)	RPD ≤ 10%	Flag the data if RPD > 10%.
	Matrix Spike	One per sample preparation batch of up to 20 samples. For CPT samples, one per CPT.	80-120% Recovery	Flag the data if % Recovery is outside QC acceptance limits
	Matrix Spike Duplicate	One per sample preparation batch of up to 20 samples. For CPT samples, one per CPT.	RPD ≤ 10%	Flag the data if RPD > 10%.
Moisture – Percent Water for Liquids	Laboratory Control Sample (LCS)	One per sample preparation batch of up to 20 samples. For CPT samples, one per CPT.	95-105% Recovery	Flag data
	Laboratory Control Sample Duplicate (LCSD)	One per sample preparation batch of up to 20 samples. For CPT samples, one per CPT.	RPD ≤ 5%	Flag data
	Analytical Duplicate	One per sample preparation batch of up to 20 samples. For CPT samples, one per CPT.	RPD ≤10% for % water > 1%	Flag data
Moisture – Solids	Analytical Duplicate	One per sample preparation batch of up to 20 samples. For CPT samples, one per CPT.	RPD ≤ 25% or ≤ 4% Absolute for samples having < 18.0% moisture	Flag data

[1] Analysis to be performed by Test America Knoxville.

[2] All specifications are laboratory specifications.

[3] All corrective action will be noted on laboratory reports, and discussed in the QA/QC section of the final report.

9.2.6 QC for Spiking of Waste

Several metals and chlorine will be spiked into the incinerators during the CPTs. The spiking of metals and chlorine will be performed by Veolia. The metals and chlorine to be spiked are:

- Chromium – a procured solution of chromic acid will be fed through a liquid feed injector;
- Mercury – a solution of mercuric nitrate will be prepared by Veolia using procured mercury (II) nitrate hydrate, and the necessary volume of the solution of mercuric nitrate will be added to vials fed to the incinerators with containerized solid waste;
- Lead – weighed packets of procured lead nitrate will be prepared by Veolia and fed to the incinerators with containerized solid waste; and
- Chlorine - weighed packets of procured hexachloroethane and/or PVC will be prepared by Veolia and fed to the incinerators with containerized solid waste.

A manufacturer's statement of purity (i.e., Certificates of Analysis - COAs)for all procured spiking materials will be acquired and reported. This will provide the information to know the concentrations of the target spiking parameter in the procured spiking materials or solutions.

Veolia will prepare the spiking solution of mercuric nitrate, and prepare the vials containing the solution of mercuric nitrate fed to the incinerator. Veolia will also prepare the packets of lead nitrate, and hexachloroethane and/or PVC fed to the incinerators. A Standard Operating Procedure (SOP) for the preparation of the spiking materials is attached as Appendix B.

Samples of all spiking materials will be collected during the CPTs (see Section 5). Chromium and mercury will be spiked as solutions. Three samples of the chromium and mercury spiking solutions will be collected in each run of the CPTs of Units 2, 3, and 4. Each of the three samples will be analyzed. The analytical results for the samples of the chromic acid and solution of mercuric nitrate will be used to confirm the concentrations of chromium and mercury in the spiked solutions.

Three samples of the lead nitrate, and hexachloroethane and/or PVC spiked as solids of the procured materials will be collected in each run of the CPTs of Units 2, 3, and 4. The samples of the lead nitrate, and hexachloroethane and/or PVC will be archived and not analyzed. The Certificates of Analysis of the procured lead nitrate, and hexachloroethane and/or PVC will be used for the concentrations of lead and chlorine in the respective materials.

10.0 Data Reduction, Validation, and Reporting

Details of data reduction, validation, and reporting are discussed in this section.

10.1 Calculations

The following sections detail the calculations which will be performed for data presentation.

The stack gas concentration of the parameters tested will be reported as the average of three test runs to document compliance. Stack gas concentration for a parameter may include analytical results for multiple components. For the determination of stack gas concentration measured in an individual sample, or run, for those sampling systems as applicable (other than SW-846 Method 0023A), the following convention will be used to sum the results of multiple analyses:

- In cases where all analytical results are hits (i.e., not—non-detects||), all analytical results will be summed.
- In cases where all analytical results are—non-detects,|| all method detection limits will be summed, and the summed result reported as a maximum (—<||).
- In cases where one or more analytical results are hits, and one or more analytical results are—non-detects,|| the hits and the—non-detects|| will be summed and reported as a maximum (—<||).

Results for dioxins/furans will be converted to 2,3,7,8-tetrachlorodibenzo-dioxin toxicity equivalents (TEQ). Note that Section §1208(b)(1)(iii) of the HWC MACT states that non-detects of dioxins/furans can be assumed to be at zero concentrations.

In those circumstances where a constituent is not detected in a waste feed (i.e., is not analyzed above the method detection limit), the concentration of that parameter will be treated as zero "0" in subsequent calculations to develop the OPL for that constituent.

10.1.1 Stack Gas Mass Emission Rate Calculations

Mass emission rates (MERs) of mercury and the SVM and LVM metals spiked during the CPT will be calculated to determine the System Removal Efficiency (SRE) of those metals, (i.e., mercury, lead, and chromium).

The MERs, in µg/hr, will be calculated as follows:

$$MER \quad 60 \; M_n \; \frac{Q_{sd}}{V_d}$$

Where:

M_n = Mass of compound collected (μg);
Q_{sd} = Dry volumetric flowrate at standard conditions (dscfm);
V_d = Dry gas volume sampled at standard conditions (dscf); and
60 = Conversion from hours to minutes.

10.1.2 Constituent Feedrate Calculations

The concentrations of the HWC MACT metals (Cr, As, Be, Pb, Cd, and Hg), ash, and chlorine will be determined in the liquid and solid waste feed streams. Metals, ash, and total chlorine will be reported for each test run. During selected tests, chlorine and metals (Cr, Pb, and Hg) will also be fed to the incinerators by spiking of waste streams.. The total mass feedrates of HWC MACT metals, ash, and chlorine during each test run will be calculated from concentrations in the wastes and the feedrates of the waste streams recorded by the facility plus the concentrations and feedrates of the spiked materials.

The calculated feedrates of HWC MACT metals in containerized solid waste in the CPT will not include the weight of the boxes in which solid waste is contained and fed to the incinerators (Units 2, 3, and 4). In the measurement of the feedrate of containerized solid wastes, the facility weighs the containers (i.e., boxes) fed to the incinerator. This is a process criteria, and will not be changed for the CPT. The weight of each container of solid waste fed to the incinerator includes the weight of the box itself, plus its contents. The box will not be analyzed for metals as part of the CPT.

In the determination of the feedrates of HWC MACT metals during the CPT, the weight of each container of solid waste fed will be reduced by the weight of the (cardboard) box in determining the mass of HWC MACT metals fed in the containerized solid waste. The weight of each charge of containerized solid waste will also not include the weight of any spiking material placed in the container. The concentration of the HWC MACT metals will be applied to only the solid waste fed in each container (i.e., box) to calculate the mass feedrate of HWC MACT metals fed in the containerized solid waste during each test run or test period of the CPT.

The feedrate of containerized solid waste taken from the DCS will be used to determine the feedrate of containerized solid wastes in each test run or test period for the establishment of the OPL for total hazardous waste feedrate. The above method of calculation of the waste feedrates of HWC MACT metals in the containerized solid waste during the CPT will not be used in normal operations of the incinerators.

10.1.3 System Removal Efficiency Calculations

System Removal Efficiency (SRE) will be calculated for the metals that will be spiked into the incinerators during the CPT (i.e., chromium, lead, and mercury) according to the following equation:

SRE, as percent (%), will be calculated as follows:

$$SRE \quad \frac{W_{in} \quad W_{out}}{W_{in}} x100$$

Where:

W_{in} = Total mass feedrate of the metal in the waste feed streams and spiking materials and/or solutions; and

W_{out} = Mass emission rate of the metal in the stack gas.

10.1.4 Correction to 7% Oxygen

The emission limits of the HWC MACT are expressed concentrations "corrected to 7% oxygen". Stack gas concentrations for particulate matter, HCl/Cl_2, SVM, LVM, mercury, dioxins/furans, total hydrocarbons, and carbon monoxide will be corrected to 7% oxygen. These corrections are done according to the following equation:

$$P_c \quad P_m \quad \frac{14}{21 \quad Oxygen}$$

Where:

P_c = Pollutant concentration corrected to 7% oxygen;

P_m = Pollutant concentration in the stack gas; and

Oxygen = Concentration of oxygen in the stack gas.

10.1.5 Stack Gas Volumetric Flowrate

The stack gas volumetric flowrate will be determined during isokinetic sampling and calculated as described in EPA Method 2.

Stack Gas Velocity Calculation

The velocity of the stack gases based on EPA Method 2 will be calculated as:

$$V_S = 85.48\, C_P \left[\frac{(T_S)(\Delta P)}{(P_S)(MW)} \right]^{1/2}$$

Where:

$$\text{Pitot tube constant} = 85.48 \frac{\text{ft}}{\text{sec}} \left[\frac{(\text{lb/lb-mole})(\text{in. Hg})}{(^\circ\text{R})(\text{in. } H_2O)} \right]^{1/2}$$

V_S = Velocity of the stack gas (ft/sec);

ΔP = Root mean square average differential pressure measured by Type S pitot (in. H_2O);

T_s = Average gas temperature in duct (°R);

P_s = Absolute duct pressure (in. Hg);

M_w = Wet gas molecular weight (lb/lb-mole); and

C_p = Type S pitot correction factor (normally 0.84).

Gas Volumetric Flowrate Calculation – Actual Conditions

The volumetric flowrate of the stack gas based on EPA Method 2 will be calculated as:

$$Q_{ac} = 60\, V_s A$$

Where:

Q_{ac} = Actual volumetric flowrate (acfm);

V_s = Velocity of the stack gas (ft/sec);

A = Cross-sectional area of the stack (ft^2); and

60 = Conversion from second to minutes.

Gas Volumetric Flowrate Calculation – Dry Standard Conditions

The volumetric flowrate of the stack gas at dry standard conditions based on EPA Method 2 will be calculated as:

$$Q_{sd} \quad (1 \quad B_W)(Q_{ac}) \frac{528}{T_S} \frac{P_S}{29.92}$$

Where:

Q_{sd}	=	Dry volumetric flowrate at standard conditions (dscfm);
Q_{ac}	=	Actual volumetric flowrate (acfm);
B_w	=	Moisture fraction;
528	=	Standard temperature (°R);
T_s	=	Average gas temperature in stack (°R);
29.92	=	Standard pressure (in. Hg); and
P_s	=	Absolute stack pressure (in. Hg).

The moisture used in the calculation will be from the Method 29 train for a particular run.

10.2 Data Validation

All measurement data will be validated in accordance with the EPA document *Guidance on Environmental Data Verification and Data Validation (EPA QA/G-8)*, and will be based upon the following:

- Representative process conditions during sampling;
- Acceptable sample collection and testing procedures;
- Consistency with expected and/or other results; and
- Adherence to prescribed QC procedures.

This will be accomplished by making a critical, comparative data review. For example, upon the completion of a EPA Method 29 sampling run, the data will be calculated, and the percent isokinetics determined. The results of all runs will be compared with each other for internal consistency. The laboratory personnel for analytical QA/QC will review the results from the analysis. Project team personnel will then perform subsequent calculations converting the stack sampling and laboratory results into gas concentrations and parameter feedrates. The above QA assessments are performed by personnel directly responsible for aspects of the project (i.e., stack sampling, waste and spiking materials sampling, laboratory analysis). All aspects of the data (i.e., sampling, analysis, calculations) are then further assessed by the Project QA/QC Coordinator. Results are compared within the testing effort for reproducibility and consistency

with engineering principles. Any suspect data will be flagged and identified with respect to the nature of the problem with validity.

10.3 Chain-of-Custody Documentation

Chain-of-custody procedures will be followed for the transfer of field samples to the laboratory. When samples are transported, they will be accompanied by a sample tracking and custody form indicating:

- Every sample shipped (by identifier);
- Sample preservation requirements;
- Analysis and preparation procedures required;
- Special requirements [e.g., matrix spikes/matrix spike duplicate (MS/MSD)];
- Sample packaging; and
- Signature of individual relinquishing sample custody.

Upon receipt by the laboratory, the following will be recorded on the sample tracking and custody form or an attachment to the form:

- Condition of samples received;
- Temperature of samples upon receipt;
- Any discrepancy between information on form and sample labels; and
- Signature of person receiving samples.

Following inspection and completion of chain-of-custody documentation, the samples will be moved to a restricted access storage area prior to analysis.

10.4 Reporting

The results of the Comprehensive Performance Tests will be evaluated for completeness and representativeness and will include all collected data. These reports will be submitted to the appropriate regulatory agencies within 90 days after completion of the test. Data and results interpretation will be presented as necessary in the reports. A detailed case narrative will be provided in the final reports for each analysis.

A Notification of Compliance (NOC) will be filed within 90 days of completion of the Comprehensive Performance Test. The NOC and the Comprehensive Performance Test Report will be submitted to EPA Region 5 and the Illinois EPA (IEPA).

11.0 Assessment of Precision, Accuracy, and Completeness

The QC analyses to be conducted during the testing program are designed to provide a quantitative assessment of the measurement system data. Test America Laboratories in Knoxville, TN will perform all of the analyses for the subsequent CPT, and will perform the quality control analyses. The two aspects of data quality that are of primary concern are precision and accuracy. Accuracy reflects the degree to which the measured value represents the actual or "true" value for a given parameter and includes elements of both bias and precision. Precision is a measure of the variability associated with the measurement system. The completeness of the data will be evaluated based upon the number of valid sample results compared with the number planned.

11.1 Precision

Precision is defined by EPA as "a measure of mutual agreement among individual measurements of the same property, usually under prescribed similar conditions." For this project, precision estimates will be based on conditions that encompass as many components of variability as are feasible, which includes variability in the sample matrix itself, as well as imprecision in sample collection, preparation, and analysis. Precision data will be reported for matrix spike duplicates and analytical duplicate samples.

Selected surrogates will be spiked into samples analyzed by GC/MS. Precision for these analyses will be expressed as the percent coefficient of variation (CV) for surrogate spike recoveries. Percent CV (also known as relative standard deviation (RSD)) is calculated as follows:

$$\%CV \quad \frac{\text{StandardDeviation}}{\text{Mean}} \quad 100$$

11.2 Accuracy

Accuracy, according to EPA's definition is "the degree of agreement of a measurement (or an average of measurements of the same thing), X, with an accepted reference or true value, T." Accuracy includes components of both bias (systematic error) and imprecision (random error). Bias may be estimated from the average of a set of individual accuracy measurements.

For this project, accuracy objectives are expressed in terms of individual measurements. Individual measurements will be compared with the objectives presented in Section 3.0 of this QAPjP. In the final analysis, the average accuracy (i.e., bias) calculated as percent recovery, will be reported and used to assess the impact on project objectives. Percent recovery is calculated as follows:

$$\% \text{ Recovery} \quad \frac{\text{Measured Value}}{\text{Reference Value}} \times 100$$

In the case of matrix spiked samples, measured value in the above equation represents the difference between the spiked sample measurement result and the unspiked sample results. The reference value represents the amount of spike added to the sample.

Consistent with reporting conventions for continuous monitor performance specifications, accuracy will be expressed in terms of percent error, which is directly related to the percent recovery calculation. Percent error is calculated as follows:

$$\% \text{ Error} \quad \frac{\text{Measured Value - Reference Value}}{\text{Reference Value}} \times 100$$

It follows that percent recovery and percent error are related by:

$$\% \text{ Error} = \% \text{ Recovery} - 100$$

11.3 Completeness

Completeness is a measure of the extent to which the database resulting from a measurement effort fulfills objectives for the amount of data required. For this program, completeness will be defined primarily in terms of the number of valid sample results collected compared with the number planned.

12.0 Audit Procedures, Corrective Action and QA Reporting

This section describes planned general corrective action procedures to be taken in response to identified problems and QA reporting.

12.1 Audit Procedures

Test America Laboratories in Knoxville, TN will be performing all of the analyses for the subsequent CPT, and will perform the quality control analyses, and the analysis of any audit samples. EPA has instituted an audit program, the SSAP (Stationary Source Audit Program), in which the Owner firm or test contractor purchases audit samples from laboratories approved by, and accredited by, EPA to provide the audit samples. The EPA restructured program requires that two accredited providers be available, and available audit samples must be listed on the EPA Emission Measurement Center website 60 days before audits are required. To date, EPA has approved two vendors to provide audit samples as an Accredited Audit Sample Provider. Audit samples currently available for the measurements being performed in the CPTs of the Veolia incinerators include:

- Hydrogen Chloride, and
- Metals – on Glass Fiber Filters and Impinger Solutions.

Audit samples for hydrogen chloride and metals will be acquired in advance of the CPT. The acquired audit samples will be taken to Veolia and will be onsite at Veolia during the conduct of the CPT. The audit samples will be transported to Test America – Knoxville with samples collected in the CPT of one of the Sauget incinerators. The audit samples will be analyzed by Test America – Knoxville along with the samples from the CPT. One set of audit samples will be acquired and analyzed for the CPT.

12.2 Corrective Action

During the course of the test program, it will be the responsibility of the field task leader and the sampling team members to see that all measurement procedures are followed as specified and that measurement data meet the prescribed acceptance criteria. In the event a problem arises, prompt action will be taken to correct the problem. Corrective action may also be initiated by the QA Coordinator or team members.

The laboratory supervisors will initiate corrective action if analytical performance (as determined by sample matrix-independent QC checks) does not meet method specifications. Since these QC checks generally occur before analysis of any samples, little or no effect would be expected on project data quality. If there was an impact expected on actual project data, the project director and QA/QC coordinator would be contacted and the problem resolved. If matrix-

specific QC checks indicate that the measurement data will not meet the quality assurance objectives, the project director will be notified immediately. The project manager, laboratory analytical coordinator, and project QA/QC coordinator will then meet and resolve the issue.

The impact of measurement bias or matrix effects on the project objectives (and any endeavors to mitigate these problems) will be assessed and reported in the appropriate Comprehensive Performance Test Report.

12.3 Quality Assurance Reporting

Effective management of a field sampling and analytical effort requires timely assessment and review of field activities. This will require effective interaction and feedback between the field team leader, the Project Manager, and the Project QA/QC Coordinator.

The CPT final report will include a separate QA/QC section, prepared by the Project QA/QC Coordinator, that will address QA/QC aspects of the test. The QA/QC section will address the results of all QA/QC activities specified in the QAPjP and in the sampling and analytical methods, and will compare those results with the data quality objectives (DQOs) stated in Section 3.0 of this QAPjP. The effect of any DQOs (or other QA/QC activities) not achieved will be discussed in detail. The effect of these on the data and conclusions will also be discussed in detail. Any incidents or requirements for corrective action will be documented and discussed.

APPENDIX A

Resume for Dr. Eugene Youngerman

Eugene Youngerman, PhD

Senior Project Chemist, Quality Officer

Areas of Expertise

Source Testing.

Field Measurements

Method Development

Field Implementation

Quality Assurance and Data Quality Review for Measurement Systems

Laboratory Coordination

Years of Experience

With URS: 27 Years
With Other Firms: 9 Years

Education

PhD / 1986 / Organometallic Chemistry / University of California at San Diego

MS / 1981 / Inorganic Chemistry / University of California at San Diego

BS / 1977 / Chemistry / Massachusetts Institute of Technology

Overview

Dr. Youngerman currently serves as a Senior Project Chemist and Unit Quality Officer for the Measurements Unit of the Austin General Engineering Office. His responsibilities include direction of and participation in permitting and testing activities of hazardous waste incinerators, as well as other source testing directed toward process characterization or regulatory compliance. He has 25 years experience in this area including document preparation; test protocol design and preparation; laboratory coordination; method development; plan implementation; and interpretation and reporting of sampling, analysis and QA/QC results. He has served as Project Director on major sampling and analysis programs for RCRA and TSCA pre-trial and trial burns. Dr. Youngerman has worked on hundreds of projects over the last27 years; the bulleted list below provides additional detail for the various activities listed above.

- Document preparation and test protocol design – Work with the client engineering, operations and environmental staffs to design a test to satisfy regulatory testing specifications, comply with method specifications and meet plant operational requirements.
- Laboratory coordination – Communicate with sub-contract laboratories to ensure that laboratory data meet project and method specifications, and that all data are usable and supportable.
- Method development – As necessary, adapt, modify or develop method approaches to measure new analytes, or standard analytes in difficult matrices.
- Test plan implementation, sample collection – Join or lead a team into the field, collect the samples, in compliance with the project specific documentation and the method specifications. Work with facility personnel, and interface with regulatory personnel, as necessary.
- Report preparation – Summarize and detail all activities associated with the sample collection and analysis. Develop and present concentrations, mass emission rates, removal efficiencies, etc.
- Quality Assessment and Detail Checking – Review all data associated with an emissions testing program, including testing performed by URS and analyses performed by subcontractor laboratories. Ensure that QA/QC support data for both sampling and analysis meet project and method specifications, and if not, present possible impact of QA/QC exceptions to the results and conclusions. Confirm that data used in report is supported by the raw data and that all calculations are correct, using both correct values and correct calculational approach.

APPENDIX B

Metals and Chlorine Spikes SOP

METALS AND CHLORINE SPIKES PROTOCOL

INCINERATOR COMPREHENSIVE PERFORMANCE TESTING

VEOLIA ENVIRONMENTAL SERVICES
SAUGET, IL
September 17, 2013

Table of Contents

Quality Control
- Chemicals for Spikes
- Chain of Custody

Spike Preparation Procedures
Spike Feeding Procedures
Attachments
- Specification Sheets
- Laboratory Analysis
- Calibration Records
- Calculations
- Recordkeeping Documents

Quality Control

Chemicals for Spikes

The following spikes have been selected for incinerator testing:

Mercury (II) nitrate hydrate	[high volatility metal]
Lead nitrate	[medium volatility metal]
Chromic acid	[low volatility metal]
Hexachloroethane	[chlorine source]

These chemicals were purchased from suppliers and delivered to the facility. Specification sheets or Certificates of Analysis with any applicable lot or batch numbers are provided for each of these chemicals in the attachments to this writing.

The Mercury (II) nitrate hydrate will be put into solution with de-ionized (DI) water and slightly acidified with concentrated Omni-trace nitric acid (specification sheet included in attachments) to help prevent any precipitation of solids. Pre-determined amounts of this solution will be fed during incinerator testing within plastic vials placed with the solid feed charges. Because the targeted mercury feedrate is significantly greater for the testing of No. 4 Incinerator, two different concentrations of Mercury nitrate solution batches will be prepared for use as spikes in the incinerator feeds.

The Lead nitrate will be put into re-closable plastic bags in pre-determined amounts and fed to the incinerators during testing by placing them with the solid feed charges.

The Chromic acid with a concentration of 35% will be fed to the incinerators at a pre-determined rate via metering pumps on an electronic scale device.

The Hexachloroethane will be put into re-closable plastic bags in pre-determined amounts and fed to the incinerators during testing by placing them with the solid feed charges.

Certification of Spike Measuring Equipment

The Mercury (II) nitrate hydrate will be measured out for the prepared solution in the facility laboratory based on calculated values. A mass balance certified for accuracy by a professional scale services company will be used. It is also calibrated before use as part of daily laboratory protocol. Class A graduated flasks and other selected laboratory equipment will be used for measuring out liquids for the given solution. A certified repipet dispenser will be used for filling individual vials. The concentration of the prepared Mercury solution will be confirmed by the laboratory.

The weighing devices used for measuring out the Lead nitrate spike bags and the Hexachloroethane spike bags are electronic scales with digital readout and control panels. They have been calibrated prior to use by a professional scale services company. Each scale panel bears a sticker indicating the calibration date and a written report on the calibration is prepared. In addition, the procedures for preparing these spike bags require the scales to be zeroed on a consistent basis during use.

The device used for feeding Chromic acid combines a holding tank, metering pumps and an electronic scale with a digital readout and control panel. It has been calibrated prior to use by a professional scale services company. The scale panel bears a sticker indicating the calibration date and a written report on the calibration is prepared.

Chain of Custody

The purchased Mercury (II) nitrate hydrate will be recorded in the Product and Reagents Logbook upon receipt, assigned a tracking number and stored in the laboratory. The jars of product will be opened at the time designated to prepare the Mercury solutions. When the Mercury solutions have been prepared, the gasketed 5-gallon pails used to contain the solution will be sealed with tape across the lid with the Laboratory Manager's signature on the tape on two sides of the pail. When the pails are not in visual contact of the Laboratory Manager, they will be stored in his locked office. When the vials of Mercury solution are to be prepared, the tape on the pails must be intact with no sign it has been tampered with or been cut. If the integrity of the tape has been compromised, the Mercury solution will be considered invalid and a new solution will have to be prepared.

The Lead nitrate, Hexachloroethane and Chromic acid will be stored in their original shipping packaging in a designated indoor storage area within the facility. The Lead nitrate and Hexachloroethane containers will be opened when it is time to prepare the individual spike packages. The drums of Chromic acid will be opened as needed during the incinerator testing when they are placed on the feeding device.

Spike Preparation Procedures

The procedures written below are the steps taken by personnel when preparing and/or measuring out and documenting the spikes used for incinerator testing.

Mercury Nitrate Spike Solution Preparation Procedure

NOTE: Calculations for preparing Mercury solutions of a defined quantity and concentration are included as attachments to this writing.

1. Obtain the necessary chemicals and laboratory equipment.

2. Fill a 100 ml Class A graduated flask to line with DI water and pour into a designated 5 gallon pail.

3. Repeat as needed for additional DI water depending on the final volume of solution needed. The last 100 ml portion will be filled for later in the procedure to use in rinsing equipment and completing the final solution volume.

4. Fill the appropriate Class A graduated flask(s) with the applicable volume of Nitric acid and pour it into the 5 gallon pail. The volume needed will represent 10% of the total volume of solution needed.

5. Tare a beaker on the mass balance then add the designated amount of Mercury (II) nitrate hydrate.

6. Empty the beaker into the 5 gallon pail. Then rinse the beaker three times with an appropriate portion of the reserved 100 ml DI water.

7. After rinsing is complete, add the remaining DI water in the 100 ml flask to the solution in the 5 gallon pail to obtain the final desired volume.

8. Record the quantities of chemicals placed in the 5 gallon pail in the Laboratory logbook.

9. Stir the solution with a rinsed plastic tube until there is no visual evidence of undissolved Mercury (II) nitrate hydrate.

10. Pull 2 aliquots of approximately 50 ml of Mercury solution for subsequent analysis.

11. Close the 5 gallon pail with a gasketed lid and follow the requirements for Chain of Custody for the Mercury solution.

Mercury Spike Vial Preparation Procedure

1. Obtain the applicable Mercury solution and plastic vials.

2. Rinse the repipet dispenser and transfer container used for measuring Mercury nitrate solution first with DI water, then twice with a portion of the solution.

3. Transfer desired amount of the selected Mercury nitrate solution from the storage vessel to the transfer container. The concentration of the solution is dependent on which incinerator the spike vials are being prepared for.

4. Position equipment within a laboratory hood.

5. Calibrate the repipet-pump by selecting a Class A volumetric flask of the applicable size and dispensing the solution into the flask while adjusting the re-pipet pump as needed to achieve the specific volume. This calibration step should be repeated after every 100 vials are filled.

6. Number each vial needed with a label starting at number—1||.

7. Using the repipet-pump, transfer the specified amount of Mercury nitrate solution into the vial. The amount of solution transferred to the vial is dependent on which incinerator the spike vials are being prepared for.

8. Document the vial number and volume on the spike vial sheet.

9. Securely seal the vial and carefully place it into a plastic storage bucket.

10. Repeat steps for number of spike vials needed.

11. When complete, close the plastic storage buckets and place in designated area. All personnel involved in preparing the vials must have their names written on the spike vial sheet.

Lead Nitrate Spike Bag Preparation Procedure

1. Obtain Lead nitrate raw material and re-closable plastic bags.

2. Position electronic scales in the selected area and zero the scales before use.

3. Put on required PPE before exposure to the Lead nitrate. Personnel directly handling Lead nitrate need dust mask, Tyvek suit, and nitrile gloves.

4. Number each plastic bag needed with a label starting at—L-1||.

5. Open a bag of raw material and use scoop or equivalent device to place the specified amount of Lead nitrate into the numbered plastic bag.

6. Document the bag number and weight on the spike bag sheet.

7. Securely seal the bag and carefully place it into a plastic storage drum.

8. Repeat steps for number of spike bags needed. Re-zero the scale at least once every 100 bags.

9. When complete, close and seal the plastic storage drums and place in the designated area. All personnel involved in preparing the bags must have their names written on the spike bag sheet.

Hexachloroethane Spike Bag Preparation Procedure

1. Obtain Hexachloroethane raw material and re-closable plastic bags.

2. Position electronic scales in the selected area and zero the scales before use.

3. Put on required PPE before exposure to the Hexachloroethane. Personnel directly handling Hexachloroethane need a full-face respirator with OV/AG cartridges, Tyvek suit, and nitrile gloves.

4. Number each plastic bag needed with a permanent marker starting at—H-1||.

5. Open a bag of raw material and use scoop or equivalent device to place specified amount of Hexachloroethane and/or PVC into the numbered plastic bag.

6. Document the bag number and weight on the spike bag sheet.

7. Securely seal the bag and carefully place it into a plastic storage drum.

8. Repeat steps for number of spike bags needed. Re-zero the scale at least once every 100 bags.

9. When complete, close and seal the plastic storage drums and place in the designated area. All personnel involved in preparing the bags must have their names written on the spike bag sheet.

Spike Feeding Procedures

The procedures written below are the steps taken by personnel when feeding spikes used for incinerator testing.

Feeding Procedure for Mercury, Lead and Chlorine Spikes

1. Position the Mercury nitrate spike vials, the Lead nitrate spike bags and the Hexachloroethane near the loading point on the solid charge feed conveyor.

2. Place one spike container of each chemical into each charge. Because the mercury feedrates are dependent on the incinerator, the correct spike vial must be fed to the respective incinerator.

3. Document the waste charge number, vial number and bag numbers on the charge sheet. All personnel involved in feeding the charges must have their names written on the charge sheet.

Feeding Procedures for Chromium Spike

1. Place the feeding device and selected drums of Chromic acid near the injection point on the incinerator.

2. Activate the power panel for the feeding device and zero the electronic scales.

3. Put on the Personnel Protective Equipment recommended by the MSDS for Chromic Acid and transfer the desired amount of material to the holding tank on the feeding device.

4. At the designated time, start the metering pumps and select pump settings that deliver the targeted feedrate.

5. Document scale readings and time at selected intervals on the Chromic acid feed chart to verify that the desired feedrate is being achieved during the incinerator testing period. All personnel involved in feeding the Chromic acid must have their names written on the feed chart.

ATTACHMENTS

Certificate of Analysis

Alfa Aesar
A Johnson Matthey Company

Product No.: 14497

Product: Mercury(II) nitrate hydrate, ACS, 98.0% min

Lot No.: A28Z031

Test	Limits	Results
Assay	98.0 % min	99.50 %
Residue after reduction	0.01 % max	0.0079 %
Chloride	0.002 % max	< 0.002 %
Sulfate	0.002 % max	< 0.002 %
Iron	0.001 % max	< 0.001 %

Appearance	Off-white, crystalline lumps
Mercurous mercury (Hg)	0.12 %

This document has been electronically generated and does not require a signature.

www.alfa.com

NORTH AMERICA
Tel: +1-800-343-0660 or +1-978-521-6300
Fax: +1-800-322-4757
Email: info@alfa.com

GERMANY
Tel: 08800 4566 4566 or +49 721 84007 280
Fax: 08800 4577 4577 or +49 721 84007 300
Email: Eurosales@alfa.com

UNITED KINGDOM
Tel: 0800-731812 or +44 (0)1524-850506
Fax: +44 (0) 1524-850508
Email: UKsales@alfa.com

FRANCE
Tel: 0800 03 51 47 or +33 (0)3 8862 6964
Fax: 0800 10 20 67 or +33 (0)3 8862 6964
Email: frventes@alfa.com

INDIA
Tel: +91 8008 812424 or +91 8008 812525 or +91 8008 812626
Fax: +91 8418 260068
Email: india@alfa.com

CHINA
Tel: +86 (010) 8567-8600
Fax: +86 (010) 8567-8601
Email: saleschina@alfa-asia.com

KOREA
Tel: +82-2-3140-6000
Fax: +82-2-3140-6002
Email: saleskorea@alfa-asia.com

Wego Chemical Mineral Corp.
239 Great Neck Road
Great Neck, NY 11021
UNITED STATES
Phone: (516) 487-3510
Fax: (516) 487-3794

TECHNICAL DATA

CERTIFICATE OF ANALYSIS **Certificate Date**

Product Name: LEAD NITRATE TECH - 25 KG BAGS

Wego Tracking Number 00021321 **CAS #** 10099-74-8

File Number 56763 **Synonyms**

ITEMS	Specifications	TEST RESULTS
Batch No 2013-1-17		*Quantity 12,800.0000 KGS*
Purity	99 % min	99.2
Water Insoluble Matter	0.02 % max	0.01
Iron	0.01 % max	0.003
Free Acid	0.10 % max	0.05
Mfg Date:	-	1/2013
Expiration Date	-	1/2014

The information set forth herein is offered as a service to our customers and is not intended to relieve a customer from its responsibility to determine the suitability of the information or of the materials described herein for purchaser's purposes, to investigate other sources of information, to comply with all laws and procedures regarding safe use of these materials and to use these materials in a safe manner. No warranty is made of the merchantability or fitness of any product, and nothing herein waives any of the Seller's conditions of sale.

Sheet No.: CHROMIC ACID Liquid (35%)
Revision: 04/21/08 WES
IMDS ID No.: 756617

Technical Information

CHROMIC ACID

Liquid (35%)

INTRODUCTION

CHROMIC ACID Liquid (35%) is a high-purity product well suited for use in chromium plating and anodizing applications. It can also be used in the manufacture of chromate conversion compounds for zinc and cadmium, bright dips for copper, brass, aluminum, and magnesium, for producing certain types of pigments, as an oxidant in organic syntheses in the pharmaceutical industry, and as a catalyst in certain petroleum refining processes.

SPECIFICATIONS

	Specification	Typical
Chromic Acid CrO3 -	57.3 oz/gal (430 g/l) Min.	60 oz/gal (450 g/l)
Sulfate (SO4) -		0.07%
Chloride (Cl) -		0.002%
Insoluble Materials -		0.002%
Sodium (Na) -		0.023%

SKYLINE CHEMICAL CORP.

P.O. BOX 53663, IRVINE, CALIFORNIA 92619 (USA)

TEL: +1-800-732-5871 FAX: +1-949-653-5836 EMAIL: sales@skylinechemical.com

CERTIFICATE OF ANALYSIS

Lot No. SC/13-002 Nikkin FINX Date FEB 5, 2013

PRODUCT	:	HEXACHLOROETHANE
FORM	:	WHITE, CRYSTALLINE POWDER (FREE-FLOWING MATERIAL)
COLOR	:	SNOW-WHITE
ODOR	:	CAMPHOR-LIKE
(1) **PURITY (% BY GLC)**	:	99.92%
(2) **MELTING POINT**	:	185 °C
(3) **MOISTURE (% WT.)**	:	0.015%
(4) **ASH (% WT.)**	:	0.1%
(5) **FREE CHLORINE**	:	NIL
(6) **WATER SOLUBLE CHLORIDE (% NaCl)**	:	0.023%
(7) **GRADING**	:	-18 +150 Mesh BSS

for SKYLINE CHEMICAL CORP

(DIRECTOR)

Attn. Mr. Steve Schoeffler
RE. COA for your PO# Email 6/14/13 Dt. Jun 14, 2013
Quantity 8,800 lbs. net

parchem
fine & specialty chemicals

Certificate of Analysis

HEXACHLOROETHANE

Lot/Batch #: SC/12-13/18
Customer PO #: 86000-5010088935
Parchem Order #: 22689

Test	Result
Form	White, crystalline powder (Free-flowing material)
Color	Snow-white
Odor	Camphor-like
Purity	99.96%
Melting Point	185.4°C
Moisture	0.01% wt.
Ash	0.09% wt.
Free Chlorine	NIL
Water Soluble Chloride (% NaCl)	0.002%
Grading	-18 +150 Mesh BSS

Approved By:

Quality Assurance
Jacob Klein

Certificate of Analysis

EMD™

Nitric Acid

Omni*Trace*® High Purity Acid

ITEM NUMBER: NX0407
LOT NUMBER: 53099

Release Date: April 09, 2013

Test	Limit	Result
Assay (HNO_3, w/w):	67 - 70%	69%
Color	7 APHA	< 7 APHA
Density (g/mL)	1.41 - 1.42 g/mL	1.42 g/mL

Analyte	Limit	Result
Chloride (Cl^-)	0.2 ppm	< 0.2 ppm
Total Phosphorus (P)	0.01 ppm	< 0.01 ppm
Total Sulfur (S)	0.3 ppm	< 0.3 ppm

Specified Trace Metals by ICP-MS (ng/g)

Analyte	Limit (max.)	Result (in ppb)	Analyte	Limit (max.)	Result (in ppb)	Analyte	Limit (max.)	Result (in ppb)
Aluminum (Al)	1	< 0.5	Holmium (Ho)	0.1	< 0.1	Ruthenium (Ru)	0.5	< 0.1
Antimony (Sb)	0.5	< 0.1	Indium (In)	0.1	< 0.1	Samarium (Sm)	0.1	< 0.1
Arsenic (As)	0.5	< 0.1	Iron (Fe)	1	< 0.5	Scandium (Sc)	0.1	< 0.1
Barium (Ba)	0.1	< 0.1	Lanthanum (La)	0.1	< 0.1	Selenium (Se)	1	< 0.1
Beryllium (Be)	0.1	< 0.1	Lead (Pb)	0.1	< 0.1	Silver (Ag)	0.1	< 0.1
Bismuth (Bi)	0.1	< 0.1	Lithium (Li)	0.1	< 0.1	Sodium (Na)	1	< 0.3
Boron (B)	1	< 0.5	Lutetium (Lu)	0.1	< 0.1	Strontium (Sr)	0.1	< 0.1
Cadmium (Cd)	0.5	< 0.1	Magnesium (Mg)	1	< 0.2	Tellurium (Te)	0.1	< 0.1
Calcium (Ca)	1	< 0.5	Manganese (Mn)	0.1	< 0.1	Terbium (Tb)	0.1	< 0.1
Cerium (Ce)	0.1	< 0.1	Mercury (Hg)	0.1	< 0.02	Thallium (Tl)	0.1	< 0.1
Cesium (Cs)	0.1	< 0.1	Molybdenum (Mo)	0.1	< 0.1	Thorium (Th)	0.1	< 0.1
Chromium (Cr)	1	< 0.5	Neodymium (Nd)	0.1	< 0.1	Thulium (Tm)	0.1	< 0.1
Cobalt (Co)	0.5	< 0.1	Nickel (Ni)	0.5	< 0.5	Tin (Sn)	0.5	< 0.1
Copper (Cu)	0.5	< 0.2	Niobium (Nb)	0.1	< 0.1	Titanium (Ti)	0.5	< 0.1
Dysprosium (Dy)	0.1	< 0.1	Palladium (Pd)	0.5	< 0.1	Tungsten (W)	0.1	< 0.1
Erbium (Er)	0.1	< 0.1	Platinum (Pt)	0.5	< 0.1	Uranium (U)	0.1	< 0.1
Europium (Eu)	0.1	< 0.1	Potassium (K)	1	< 0.2	Vanadium (V)	0.5	< 0.1
Gadolinium (Gd)	0.1	< 0.1	Praseodymium (Pr)	0.1	< 0.1	Ytterbium (Yb)	0.1	< 0.1
Gallium (Ga)	0.1	< 0.1	Rhenium (Re)	0.1	< 0.1	Yttrium (Y)	0.1	< 0.1
Germanium (Ge)	0.1	< 0.1	Rhodium (Rh)	0.5	< 0.1	Zinc (Zn)	0.5	< 0.2
Gold (Au)	0.1	< 0.1	Rubidium (Rb)	0.1	< 0.1	Zirconium (Zr)	0.1	< 0.1
Hafnium (Hf)	0.1	< 0.1						

Other Trace Metals by ICP-MS (ng/g)

Tantalum (Ta)	< 0.1

EMD Chemicals Inc.
Affiliate of Merck KGaA, Darmstadt, Germany

Gene A. Desotelle
Quality Control Manager

For Technical Assistance Call: (800) 222-0342

Made in Canada

Effective Date: 02/02/2010 NForm1055(4)

Bottle-Top Dispenser

Operator Instructions

For capacities of

2.5ml

5ml

10ml

30ml and

50ml

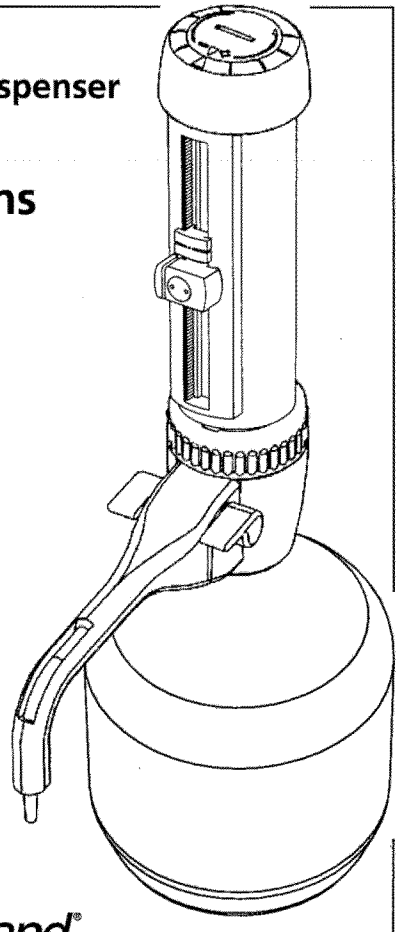

Fisherbrand®

Quality Control Certificate & Instrument Warranty

GB	WARRANTY	This instrument is guaranteed for 12 months. This certificate of quality control is valid for the enclosed apparatus. These test results are to ISO standard 8655 and show imprecision and inaccuracy of stated maximum nominal volume using distilled water @ 20.000 °C.
D	GARANZIA	Wir leisten 12 Monate Garantie gegen Vorlage dieses Prufprotokolls. Dieses prufprotokoll wurde fur das beilegende Gerat erstellt. Dieses Testergebnisse entsprechen ISO Norm 8655 und weisen eine Ungenauigkeit des angegebenen maximalen Nenninhalts bei Verwendung von destilliertem Wasser bei 20.000 °C auf.
F	GARANTIE	Nous accordons une garantie de 12 mois pour tout appareil achete en notre societe. Ce certificat a eté établi pour l'appareil suivant. Les resultats des essais son conforme a la norme ISO 8655 et font ressortir une imprecision et une inexactitude du volume dans les limites de la valuer nominale maximale admissible avec de l'eau distillée a 20.000 °C.
E	GARANTIA	Concedemos contra la presentacion de este certificado 12 meses de garantia. Este certificado de control de calidad es valido para el aparato adjunto. Los resultados de estos ensayos conforman con la norma ISO 8655 y muestran la imprecision e inexactitud del volumen nominal maximo declarado usando aqua destilada a 20.000 °C.

Model	Inspector	Date	Serial No.
Fisherbrand	PARISH.J	21.02.2013	AF2572

1543 Columbia Ave,
Franklin TN 37064

Phone: (800) 846-9959 - (412) 257-8861

Test Volume (ml)	10 ML
Inaccuracy (A%)	0.0002 %
Coefficient of Variation (CV%)	0.0617 %

R5-2014-0104710000431

Quality Compliance CERTIFICATE of Conformity

These products are subject to our highest standard of quality assurance. At every stage of production this manufacturing lot of items is produced in a controlled environment and is traceable. We test every lot of these products to ensure they perform to your needs.

We guarantee that these products meet our strictest requirements as applicable for precision, clarity, warp, centrifugation and are free of detectable contamination that might affect your results. Should you find these products fail to meet our published standards please contact us for a replacement.

To receive a testing certificate for a specific lot number please contact our Customer Support Department.

Analysis Certificate

ISO 9001 Registered Quality ™

This certificate of compliance is issued to confirm that this lot of products conforms to our written material specifications and has been tested and found as applicable to be:

- Free of detectable Nuclease contaminants as confirmed by a gel assay.
- Free of Human DNA to a detection level of 1 picogram of DNA.
- If this is a sterile product this lot has been tested and found to be free of Endotoxin to a detection level of 0.05EU/mL.
- Sterile studies to detect microbial contamination are completed quarterly in compliance with AAMI/ISO 11137 and these products have an SAL between 10^{-5} and 10^{-6}.
- The resins used to produce these products have been tested for heavy metals contamination using the U.S.P. (231) method and found to have results lower than 1ppm.

Testing protocols are described on the reverse
Rev. New

Testing Protocols Used in Quality Assurance

Product Sterilization
Those products designated as Sterile are irradiated by gamma radiation. The validated dosage level for these products is in a range between 12-25 kGy.

Bioburden and Radiation Validation
Bioburden and Radiation Validation studies are performed according to the ANSI/AAMI/ISO 11137 standard This testing is performed quarterly by an independent laboratory.

Endotoxin Detection (Pyrogen)
Samples of these products are extracted in endotoxin-free water and tested for endotoxins using the kinetic turbidimetric method of the Limulus Amoebocyte Lysate (LAL) test according to the USP standard. The minimum detection level for this test is 0.05 EU/mL.

Nuclease Detection
For RNase testing, sample products are flushed in 20µL pools containing 1µg of 7.5 kb Poly(A)-tailed RNA with a buffer containing NaCl and MgCl2. For the DNase test, product samples are flushed in 20µL pools containing of 1.0µg of l Hind III DNA with a buffer containing NaCl and MgCl2. Reactions are then incubated for 1 hour at 37° C then visualized in an agarose gel. The results are then compared to negative and positive controls. The resulting reactions must show no degradation of the DNA and RNA fragments to meet our quality standard.

Rev. New

DNA Contamination
Each product sample is extracted with sterile, DNA-free water. A portion of the extract is added to a PCR reaction containing thermostable polymerase, a primer set to amplify a mammalian gene, and dNTPs. Negative control reactions and positive control reactions (containing 1 picogram of Human Genomic DNA) are also created. All reactions are thermocycled for 40 cycles, after which the results are visualized by agarose gel electrophoresis. The absence of PCR signal in the sample reactions indicates the product is free of DNA contamination.

To receive a Testing Certificate for a specific lot number, please contact our Customer Support Department at:

800.227.1466 or ++ 1.707.766.2100
or Fax us at
800.648.4859 or ++1.707.766.2199
with the lot number of your product.

CI-CERT

Printed on Recycled Paper

The PCR process is covered by patents owned by Hoffman-La Roche Ltd.

©Copyright 2004 Labcon North America. All Rights Reserved.

REPORT TO: Jeff Mueller /DK

VES / TWI NON-ROUTINE SAMPLE REPORT

RECEIVER: NA PROFILE: NA

GENERATOR:

SAMPLE #	DRUM #	As (mg/kg)	Be (mg/kg)	Cd (mg/kg)	Cr (mg/kg)	Pb (mg/kg)	Hg (mg/kg)	Date	Analyst
Low Hg 2251-67-17							2388	8/30/13	DB
Hi Hg 2251-67-20							23,550	1	1

Reviewed By: Kathleen Smith Date:

THIS SAMPLE WAS COLLECTED ACCORDING TO APPLICABLE SW-846 PROCEDURES

This report had been prepared for the exclusive use and benefit of Veolia Environmental Services. No representation concerning sample validity or analytical accuracy of completeness is hereby made to any other person receiving this report.

C:\Documents and Settings\Formby\My Documents\Metals Forms\~Metals Non-Routine Forms

VEOLIA ENVIRONMENTAL SERVICES

Mercury

By Mercury Analyzer

Unless otherwise noted, sample diluted to 50mL

DMA #3

	Run Date	Prep Date(m/d) & Batch#	Sample ID	Receiver # Profile#	Digested Sample wt(g)	Instrument Test Wt (g)	Instrument Reading(ng)	Sample Result mg/kg	A
1	8/29/13	8/29/13 B1 -5	361633	43-2297	0.508	0.250	0.093/0.097	<0.04 (0.038)	08/14
2		–	0.1 ng std.	–	–	0.010	0.084	-16%	
3		–	0.5 ng std.	–	–	0.050	0.48	-4%	
4		–	5 ng std.	–	–	0.050	5.0	0%	
5		8/22/13 B1 -5	360735	42-9761	0.503	0.250	0.01	<0.04	
6		-6	360156	42-9744	0.501	0.250	0.003	<0.04	
7		-8	360572	43-0483	0.510	0.250	0.03	<0.04	
8		-9	360205	42-9863	0.507	0.250	0.04	<0.04	
9		-10	360111	42-9721	0.503	0.250	0.07	<0.04	
10		-16	360212	42-9904	0.501	0.250	0.007	<0.04	
11		-17	360210	42-9563	0.501	0.250	1.25/1.21	0.50	
12		-18	360148	42-9917	0.503	0.250	0.01	<0.04	
13		-19	360343	42-8802	0.502	0.250	0.01	<0.04	
14		-20	360146	42-9967	0.506	0.250	0.01	<0.04	
15		–	0.1 ng std.	–	–	0.010	0.095	-5%	
16		–	0.5 ng std.	–	–	0.050	0.46	-8%	
17		–	5 ng std.	–	–	0.050	4.9	-2%	
18	8/30/13	–	0.1 ng std.	–	–	0.010	0.088	-12%	
19		–	0.5 ng std.	–	–	0.050	0.47	-6%	
20		–	5 ng std.	–	–	0.050	5.1	+2%	
21		–	10 ng ICV 8/30/13	–	–	0.010	9.8	-2%	
22		–	2251-67-20 (high)	–	–	0.0100	9.42	23550.0	
23		–	2251-67-17 (low)	–	–	0.0250	5.97	2388.0	
24		–	5 ng std	–	–	0.050	5.17	3.4	
25		8/29/13 B1 -14	360209	42-9902	0.508	0.250	0.04	<0.04	
26		-15	360110	42-9723	0.505	0.250	0.03	<0.04	
27		-16	360119	42-9956	0.503	0.250	0.05	<0.04	
28		-17	360114	42-9978	0.510	0.250	0.04	<0.04	
29		-18	360117	42-9996	0.503	0.250	0.04	<0.04	
30		-19	360120	42-9976	0.505	0.250	0.02	<0.04	

Reviewed By: Date: 9/6/13

Acceptable limits for standards:

Lowest standard on curve: +30/-20
All other concentrations: +/-10%
LCS Limits: 17.8 - 27.0 mg/kg (Mean 22.4)

Current reagent trace numbers are listed in front pages of log
Theorectical Spike: 0.1mL x 100/sample wt.

Sample # : _____ Lines: _____
Theor Spike: _____
Mean: _____
RPD: _____
% Recovery: _____

Sample # : _____ Lines: _____
Theor Spike: _____
Mean: _____
RPD: _____
% Recovery: _____

→ (1) lines 22-23. 2251-67-20 and 2251-67-17
MACT non-reactive samples
2251-67-20 was prepared ~~after~~ by a 25,000 dilution,
and 2251-67-17 was prepared by a 10,000 dilution.
sample results were calculated based on these dilutions

~~DB 8/30/13~~

$\frac{9.42}{0.010}$ (ml delivered) × 25,000 (dil.) × $\frac{1}{1000}$ (unit conv.) = 23550.0 mg/~~kg~~ liter KS DB 9/16/13

$\frac{5.97}{0.0250}$ × 10,000 × $\frac{1}{1000}$ = 2388.0 mg/~~kg~~ liter KS DB 9/16/13

KS / DB 8/30/13

Run Date 8/30/13 DMA-3 DB/KS

Reprinted 9/16/13

Sample listing "083013-3.d80"

Page 1 of 1

Created by "Administrator"
8/30/2013 15:16:16

Pos Nr.	Samplename Remark	Amount Date	State Date	Height	Hg [ng]	Concentr. [mg/kg]	Σ	Cal-Factor
1 (1)	inst.	1.0000 g 8/30/13 07:11am	✓ 8/30/13 07:23am	0.0027	0.0165	0.0000		1.0000
2 (2)	inst.	1.0000 g 8/30/13 07:11am	✓ 8/30/13 07:29am	0.0007	0.0007	0.0000		1.0000
25 (3)	0.1 ng std.	0.0100 g 8/30/13 07:45am	✓ 8/30/13 07:49am	0.0117	0.0878	0.0088		1.0000
26 (4)	0.5 ng std.	0.0500 g 8/30/13 07:48am	✓ 8/30/13 07:54am	0.0599	0.4740	0.0095		1.0000
27 (5)	5 ng std.	0.0500 g 8/30/13 07:49am	✓ 8/30/13 08:02am	0.2606	5.1009	0.1020		1.0000
28 (6)	10 ng icv 8/30/13	0.0100 g 8/30/13 08:32am	✓ 8/30/13 08:32am	0.4692	9.8071	0.9807		1.0000
25 (7)	2251-67-20 High STD	0.0100 g 8/30/13 09:43am	✓ 8/30/13 09:49am	0.4533	9.4223	0.9422		1.0000
26 (8)	2251-67-17 Low STD	0.0250 g 8/30/13 09:56am	✓ 8/30/13 09:57am	0.3016	5.9726	0.2389		1.0000
27 (9)	5 ng std.	0.0500 g 8/30/13 10:05am	✓ 8/30/13 10:06am	0.2638	5.1681	0.1034		1.0000
14 (10)	360209 8/28-b1.	0.2500 g 8/30/13 10:15am	✓ 8/30/13 10:18am	0.0059	0.0418	0.0002		1.0000
15 (11)	360110 8/28-b1.	0.2500 g 8/30/13 10:18am	✓ 8/30/13 10:23am	0.0050	0.0347	0.0001		1.0000
16 (12)	360119 8/28-b1.	0.2500 g 8/30/13 10:19am	✓ 8/30/13 10:31am	0.0064	0.0458	0.0002		1.0000
17 (13)	360114 8/28-b1.	0.2500 g 8/30/13 10:19am	✓ 8/30/13 10:39am	0.0041	0.0276	0.0001		1.0000
18 (14)	360117 8/28-b1.	0.2500 g 8/30/13 10:36am	✓ 8/30/13 10:48am	0.0055	0.0386	0.0002		1.0000
19 (15)	360120 8/28-b1.	0.2500 g 8/30/13 10:37am	✓ 8/30/13 10:56am	0.0028	0.0173	0.0001		1.0000
20 (16)	360118 8/28-b1.	0.2500 g 8/30/13 10:38am	✓ 8/30/13 11:04am	0.0077	0.0561	0.0002		1.0000
21 (17)	360115 8/28-b1.	0.2500 g 8/30/13 10:39am	✓ 8/30/13 11:12am	0.0040	0.0268	0.0001		1.0000
25 (18)	0.1 ng std.	0.0100 g 8/30/13 11:22am	✓ 8/30/13 11:26am	0.0105	0.0783	0.0078		1.0000
26 (19)	0.5 ng std.	0.0500 g 8/30/13 11:26am	✓ 8/30/13 11:31am	0.0566	0.4473	0.0089		1.0000
27 (20)	5 ng std.	0.0500 g 8/30/13 11:26am	✓ 8/30/13 11:40am	0.2510	4.9001	0.0980		1.0000
25 (21)	0.1 ng std. [redacted]	0.0100 g 8/30/13 11:53am	✓ 8/30/13 11:54am	0.0144	0.1092	0.0109		1.0000
26 (22)	0.1 ng std. [redacted]	0.0100 g 8/30/13 11:53am	✓ 8/30/13 11:59am	0.0108	0.0806	0.0081		1.0000
27 (23)	0.5 ng std.	0.0500 g 8/30/13 11:53am	✓ 8/30/13 12:07am	0.0576	0.4554	0.0091		1.0000
27 (24)	0.5 ng std. [redacted]	0.0500 g 8/30/13 12:25am	✓ 8/30/13 12:26am	0.0575	0.4546	0.0091		1.0000
28 (25)	inst.	1.0000 g 8/30/13 12:33am	✓ 8/30/13 12:33am	0.0011	0.0038	0.0000		1.0000
4 (26)	360237 8/29-b1.	0.0250 g 8/30/13 12:48am	✓ 8/30/13 12:50am	0.4629	9.6555	0.3862		1.0000
8 (27)	360516 8/29-b1.	0.2500 g 8/30/13 12:52am	✓ 8/30/13 01:03pm	0.0047	0.0323	0.0001		1.0000
9 (28)	359089 8/29-b1.	0.2500 g 8/30/13 12:53am	✓ 8/30/13 01:12pm	0.0249	0.1928	0.0008		1.0000

CHAIN OF CUSTODY RECORD

Company: VEOLIA ENVIRONMENTAL SERVICES Telephone: (618) 271-2804

Address: 7 MOBILE AVE (STREET) SAUGET (CITY) ILLINOIS (STATE) 62201 (ZIP)

Collector: Sample Date / Time:

SAMPLE #	# CONTAINERS x SIZE	SAMPLE DESCRIPTION / SOURCE	ANALYSIS REQUIRED
2251-67-20	1 X 50ml	Hg Test Solution High Conc \ TWI - VES	Total Hg
2251-67-17	1 X 50ml	Hg Test Solution low Conc \ ⊥	⊥

Samples Submitted To:

CSR is IN House Testing Bill my PO for Results

Questions call Trey Formby

618-271-2804

CHAIN OF POSSESSION

Relinquished By: (1) (Signature)	Date (2):	Received By: (Signature)	Date: (2)
[signature]	8-27-13	Daniel C Barker	8/30/13

NOTE:
(1) First "Relinquished By" signature shall be that of the sampler.
(2) Apparent gaps or breaks in the inclusive dates in the "Chain of Possession" section are covered by site receiving shipping logs.

5404 Jedmed Ct. - St. Louis, MO 63129
Business: (314) 845-7778 - Fax: (314) 845-7779

ACCURATE SUPERIOR SCALE

Scale Inspection Report

ISO/IEC 17025:2005

Customer: VEOLIA ENVIRONMENTAL SERVICES (
#7 MOBILE AVENUE
SAUGET, IL 62201

escription: Class I
Serial No: 11925184
Scale No: N/A
Divisions: 0.01 g

Location: N/A
MFG / Model: Mettler / PG 802

Scale Type: Balance
Capacity: 810 g

Scale was found in Tolerance: [X] yes [ ] no

Shift Test Sides / Corners / Sections	Weights Applied	Scale Reading (As found)	Error (+/-)	Tolerance Maintenance	Scale Reading After Adjustment (As Left)	Accept / Reject
XXXX

5404 Jedmed Ct. - St. Louis, MO 63129
Business: (314) 845-7778 - Fax: (314) 845-7779

ACCURATE SUPERIOR SCALE

Scale Inspection Report

ISO/IEC 17025:2005

Customer: VEOLIA ENVIRONMENTAL SERVICES (
#7 MOBILE AVENUE
SAUGET, IL 62201

escription: Class III
Serial No: 1386300044
Scale No: N/A
Divisions: .1 lb

Location: N/A
MFG / Model: Ricelake 320I

Scale Type: Bench
Capacity: 100 lb

Scale was found in Tolerance: [X] yes [ ] no

Shift Test Sides / Corners / Sections	Weights Applied	Scale Reading (As found)	Error (+/-)	Tolerance Maintenance	Scale Reading After Adjustment (As Left)	Accept / Reject
XXXX

5404 Jedmed Ct. - St. Louis, MO 63129
Business: (314) 845-7778 - Fax: (314) 845-7779

ACCURATE SUPERIOR SCALE

Scale Inspection Report

ISO/IEC 17025:2005

Customer: VEOLIA ENVIRONMENTAL SERVICES (
#7 MOBILE AVENUE
SAUGET, IL 62201

escription: Class III
Serial No: 1386300045
Scale No: N/A
Divisions: .1 lb

Location: N/A
MFG / Model: Ricelake 320I

Scale Type: Bench
Capacity: 100 lb

Scale was found in Tolerance: [X] yes [ ] no

Shift Test Sides / Corners / Sections	Weights Applied	Scale Reading (As found)	Error (+/-)	Tolerance Maintenance	Scale Reading After Adjustment (As Left)	Accept / Reject
XXXX

MERCURY CONCENTRATION FOR MERCURY (II) NITRATE HYDRATE, LOT NO. A28Z031

From Certification of Analysis for Lot No. A28Z031:

Assay = 99.5 wt. % $Hg(NO_3)_2 \cdot x\,H_2O$ x = 1 or 2

Also contains 0.12 wt. % Mercury in 1+ oxidation state (Mercury (I) or Mercurous mercury)

Estimated Average Molecular Weight and Percent Mercury by Weight:

$Hg(NO_3)_2 \cdot H_2O$: 200.6 + 2{14.01 + (3 * 16.00)} + 18.02 = 342.6 amu

$Hg(NO_3)_2 \cdot 2\,H_2O$ 200.6 + 2{14.01 + (3 * 16.00)} + 2(18.02) = 360.7 amu

For 50/50 ratio of monohydrate/dihydrate:

200.6 / {(342.6 + 360.7) / 2} * 100 = 57.05 wt. % Mercury in $Hg(NO_3)_2 \cdot x\,H_2O$

For 99.5% assay and 0.12% Mercurous mercury of Lot No. A28Z031:

0.995 (57.05) + 0.12 = 56.88 wt. % Mercury

MERCURY SOLUTION FOR NO. 2 AND NO. 3 INCINERATORS

Targeted Mercury feed rates: 0.002 lb Mercury / hour

40 vials solution / hour @ 10 ml solution / vial *

56.88 wt. % Mercury in $Hg(NO_3)_2 \cdot x\ H_2O$

Estimated Total Solution Needed:

10 ml/vial (40 vial/hr)(4 hr/test)(3 test/incin)(2 incin) = 9600 ml = 9.6 liters

9.6 liters + safety factor = 12 liters Mercury solution

For 12 Liters of Mercury Solution:

0.002 lb Hg/hr (453.6 gm/lb) / 40 vials/hr = 0.02268 gm Hg/vial

$(0.02268\ ^{gm\ Hg}/_{vial}) / (10\ ^{ml\ sol'n}/_{vial}) \times 1000\ ^{ml}/_{lit} \times 12$ lit / 0.5688 =

47.85 gm $Hg(NO_3)_2 \cdot x\ H_2O$ in 12 liters solution

Amounts of Components for Preparation of Mercury Solution for No. 2 and No. 3 Incinerators:

47.85 gm +/- 0.05 gm $Hg(NO_3)_2 \cdot x\ H_2O$

10.8 liters de-ionized water

1.2 liters conc. Nitric acid

*Volumes may be modified based on concentrations in the native waste fed.

MERCURY SOLUTION FOR NO. 4 INCINERATOR

Targeted Mercury feed rates: 0.04 lb Mercury / hour

40 vials solution / hour @ 20 ml solution / vial*

56.88 wt. % Mercury in $Hg(NO_3)_2 \cdot x\ H_2O$

Estimated Total Solution Needed:

20 ml/vial (40 vial/hr)(4 hr/test)(3 test/incin) = 9600 ml = 9.6 liters

9.6 liters + safety factor = 12 liters Mercury solution

For 12 Liters of Mercury Solution:

0.04 lb Hg/hr (453.6 gm/lb) / 40 vials/hr = 0.4536 gm Hg/vial

$(0.4536\ ^{gm\ Hg}/_{vial}) / (20\ ^{ml\ sol'n}/_{vial}) \times 1000\ ^{ml}/_{lit} \times 12$ lit / 0.5688 =

478.5 gm $Hg(NO_3)_2 \cdot x\ H_2O$ in 12 liters solution

Amounts of Components for Preparation of Mercury Solution for No. 4 Incinerator:

478.5 gm +/- 0.05 gm $Hg(NO_3)_2 \cdot x\ H_2O$

10.8 liters de-ionized water

1.2 liters conc. Nitric acid

*Volumes may be modified based on concentrations in the native waste fed.

MERCURY NITRATE SPIKE VIALS - Target Volume:

Date _____

Personnel _____

Shift _____

_____

Pump calibrated _____

VIAL #	VOLUME (ml)	VIAL #	VOLUME (ml)	VIAL #	VOLUME (ml)	VIAL #	VOLUME (ml)
1		26		51		76	
2		27		52		77	
3		28		53		78	
4		29		54		79	
5		30		55		80	
6		31		56		81	
7		32		57		82	
8		33		58		83	
9		34		59		84	
10		35		60		85	
11		36		61		86	
12		37		62		87	
13		38		63		88	
14		39		64		89	
15		40		65		90	
16		41		66		91	
17		42		67		92	
18		43		68		93	
19		44		69		94	
20		45		70		95	
21		46		71		96	
22		47		72		97	
23		48		73		98	
24		49		74		99	
25		50		75		100	

Crew: _____ Date: _____ Scale Zeroed: _____

BAG #	Pb(NO3)2 (lb)	BAG #	Pb(NO3)2 (lb)	BAG #	Pb(NO3)2 (lb)	BAG #	Pb(NO3)2 (lb)	BAG #	Pb(NO3)2 (lb)
1		26		51		76		101	
2		27		52		77		102	
3		28		53		78		103	
4		29		54		79		104	
5		30		55		80		105	
6		31		56		81		106	
7		32		57		82		107	
8		33		58		83		108	
9		34		59		84		109	
10		35		60		85		110	
11		36		61		86		111	
12		37		62		87		112	
13		38		63		88		113	
14		39		64		89		114	
15		40		65		90		115	
16		41		66		91		116	
17		42		67		92		117	
18		43		68		93		118	
19		44		69		94		119	
20		45		70		95		120	
21		46		71		96		121	
22		47		72		97		122	
23		48		73		98		123	
24		49		74		99		124	
25		50		75		100		125	

HEXACHLOROETHANE SPIKE BAGS - Target Weight: pounds

Date _____

Crew Personnel _____

Shift _____

_____

Scale zeroed _____

BAG #	WEIGHT (LBS)	BAG #	WEIGHT (LBS)	BAG #	WEIGHT (LBS)	BAG #	WEIGHT (LBS)
1		26		51		76	
2		27		52		77	
3		28		53		78	
4		29		54		79	
5		30		55		80	
6		31		56		81	
7		32		57		82	
8		33		58		83	
9		34		59		84	
10		35		60		85	
11		36		61		86	
12		37		62		87	
13		38		63		88	
14		39		64		89	
15		40		65		90	
16		41		66		91	
17		42		67		92	
18		43		68		93	
19		44		69		94	
20		45		70		95	
21		46		71		96	
22		47		72		97	
23		48		73		98	
24		49		74		99	
25		50		75		100	

APPENDIX C

Liquid Waste Sampling SOP

SAMPLING INSTRUCTIONS
Liquid Waste Feed

1.0 BACKGROUND

These instructions are for sampling the Liquid Waste Feed.

The referenced sampling method is Method S004 in EPA's—Sampling and Analysis Methods for Hazardous Waste Incineration‖.

2.0 SAFETY

The liquid waste feed is hazardous. Personal protection equipment (PPE) for this location consists of a hard hat, goggles, steel-toed boots, respirator, and appropriate gloves.

3.0 SUPPLIES: TO BE STORED AT THE SAMPLING AREA FOR EACH RUN

1 – Pre-cleaned 500-mL wide-mouth amber glass bottle (first part of the test)
1 – Pre-cleaned 250 mL wide-mouth amber glass bottle (second part of the test)
Multiple pre-cleaned 500 mL wide-mouth amber glass bottle
1 – Pre-cleaned 1-gallon wide-mouth glass jar
1 – Data sheets
1 – Clipboard
2 – Black ballpoint pens
1 – Sample tray
1 – Timer
1 – Heavy plastic sheeting (10')
1 – Absorbent towels (roll)
1 – 5-gallon bucket

4.0 SAMPLING PREPARATIONS

1. Obtain supplies.
2. Transport sampling materials to sample location.
3. Check sampling location to ensure that the data sheet, sampling location and sample containers are correctly marked, and labels for the samples. All data sheet and sample containers will be labeled by the sampler.
4. Spread plastic sheeting under the sample tap and the immediate work area with absorbent pads along the edge.
5. Place sample tray near the sample tap on the plastic sheeting.
6. Place the 5-gallon plastic bucket under the sample tap.
7. Mark a 500-mL bottle for about 500 mLs, and mark a 250 mL bottle for about 200 mLs.
8. Organize the sampling location and verify that you have the proper tools and documentation paperwork.
9. Legibly record sampler's name and date on the data sheet.

5.0 SAMPLING PROCEDURE

When directed by project coordinator, do the following every 15 minutes beginning at the start of the Method 5 in the first part of the test through the completion of the Method 5 sampling.

1. Locate the sample tap and verify that the sample tap valve is placed in the—off|| position.
2. Locate the flow control valve and verify that it is in the—on|| position.
3. Verify that the 5-gallon bucket is under the sample tap, and then open the sample tap until a full stream of liquid is flowing into the bucket to flush the sample line. The stream should not be so fast as to be uncontrollable nor so slow as to not flush the sample line. Flow into the 5-gallon bucket an adequate amount to flush the sample line.
4. Every 15 minutes, collect 500 mLs into marked 500 mL-liter bottle, shut off the sample valve, and pour the contents into the 1-gallon jar. It is not necessary to keep the 1-gallon jar on ice.
5. During one test run of the first part of the test of each incinerator, collect a duplicate sample by collecting another 500 mLs into the marked 500 mL-liter bottle, shut off the sample valve, and pour the contents into a separate 1-gallon jar for the duplicate sample. It is not necessary to keep the 1-gallon jar on ice.
6. Every 15 minutes, following collection of the 500-mL sample used to make the composite sample, collect 500 mLs into a 500-mL bottle, and then shut off the sample valve.
7. Record sample time and test run number on data sheet.
8. Cap the 1-gallon jar. It is important that the time the jar is open to the atmosphere be kept to a minimum.
9. Place the empty 1-liter bottle, and the 500-mL sample, in sample tray and wait for the next sample period.

When directed by project coordinator, do the following every 15 minutes beginning at the start of the Modified Method 26A, Method 29 and Method 0023A sampling trains in the second part of the test, through the completion of the Method 0023A sampling.

1. Locate the sample tap and verify that the sample tap valve is placed in the—off|| position.
2. Locate the flow control valve and verify that it is in the—on|| position.
3. Verify that the 5-gallon bucket is under the sample tap, and then open the sample tap until a full stream of liquid is flowing into the bucket to flush the sample line. The stream should not be so fast as to be uncontrollable nor so slow as to not flush the sample line. Flow into the 5-gallon bucket an adequate amount to flush the sample line.
4. In the second part of the test, every 15 minutes collect 500 mLs into the 500-mL bottle, shut off the sample valve, and pour the contents into a 1-gallon jar (1 of 3) throughout the Modified Method 26A stack sampling. Collect 300 mLs into the other 500-mL bottle, shut off the sample valve, and pour the contents into a second 1-gallon jar throughout the Method 29 stack sampling. Collect 200 mLs into the 250-mL bottle, shut off the sample valve, and pour the contents into a third 1-gallon jar throughout the Method 0023A stack sampling. It is not necessary to keep the 1-gallon jars on ice.
5. Every 15 minutes, following collection of the samples used to make the composite sample(s), collect 500 mLs into a 500-mL bottle, and then shut off the sample valve.
6. Record sample time and test run number on data sheet.

7. Cap the 1-gallon jars. It is important that the time the jar is open to the atmosphere be kept to a minimum.
8. Place the 500-mL and/or 250-mL bottles, and the 500mL sample, in sample tray and wait for the next sample period.

(NOTE: If at any time during the sampling event you observe changes in the stream, contact the project coordinator immediately. Examples of changes in the streams are loss of flow, color changes of the material being collected, plugging of the sample lines, etc.)

6.0 COMPLETION OF SAMPLING, CLEAN-UP, SAMPLE CUSTODY

At the end of the sampling period, upon direction, perform the following activities.

1. Verify that the data sheet has been completed.
2. Verify that the 1-gallon jars from the first part and the second part of the test run, and the 500-ml bottles, are capped.
3. Locate the valve that controls flow to the sample tap and place in the—off‖ position.
4. Open the sample tap valve and drain the line into the 5-gallon bucket, then close the valve.
5. Carefully transport the 5-gallon bucket containing the waste liquid to designated disposal drum and transfer the contents.
6. Return the bucket to the sampling location.
7. Clean up the sample location by folding the plastic sheeting as to contain any spilled material and absorbent pads, and dispose appropriately.
8. Remove all disposable PPE and dispose appropriately.
9. Return the 1-gallon jars (These are the composite samples.), the 500-mL bottles, and the data sheets to the sample accumulation area.

APPENDIX D

Solid Waste Compositing SOP

COMPOSITING INSTRUCTIONS
Solid Waste Feed

1.0 BACKGROUND

These instructions are for compositing the Solid Waste Feeds – Containerized and Bulk.

2.0 SAFETY

The solid waste feed is hazardous. Personal protection equipment (PPE) handling this material consists of a hard hat, goggles, steel-toed boots, respirator, and appropriate gloves.

3.0 SUPPLIES: TO BE STORED AT THE COMPOSITING AREA

1 – Work table
1 – Pre-cleaned 1-gallon wide-mouth glass jar
1 – Data sheets
1 – Clipboard
2 – Black ballpoint pens
1 – Balance
1 – Heavy plastic sheeting (10')
1 – Absorbent towels (roll)
Multiple pre-cleaned sampling scoops
Long-handled spatula

4.0 COMPOSITING PROCEDURE

1. Obtain supplies.
2. Transport individual solid waste samples from the two parts of the test run or test period to compositing area.
3. Check to ensure that the individual samples are from the same waste stream and from the same test run or test period, and from the same part of the test run or period. Check to see that data sheet and container for the composite sample are correctly marked, and labeled for the samples. All data sheet and sample containers will be labeled by the person doing the compositing.
4. Spread plastic sheeting over the work table and the immediate work area. Spread absorbent pads as needed.
5. For samples from the first part of each test run, using a sample scoop, remove and weigh 500 grams of material from the individual samples and put in the 1-gallon wide-mouth glass jar.
6. For samples from the second part of each test run, using a sample scoop, remove and weigh 200 grams of material from the individual samples and put in the 1-gallon wide-mouth glass jar.
7. Thoroughly mix the contents of the 1-gallon jar using a long-handled spatula. This is the composite sample.
8. Complete the data sheet.

5.0 COMPLETION OF SAMPLING, CLEAN-UP, SAMPLE CUSTODY

1. Verify that the data sheet has been completed.
2. Verify that the 1-gallon jar is properly labeled.
3. Verify that the 1-gallon jar is capped.
4. Retain any unused material in the individual sample bottles.
5. Clean up the compositing location by folding the plastic sheeting as to contain any spilled material and absorbent pads, and dispose appropriately.
6. Remove all disposable PPE and dispose appropriately.
7. Take the composite sample and the individual samples, and the data sheet to the sample accumulation area.

APPENDIX E

URS Corporation SOPs and
Test America Laboratories – Knoxville SOPs