Comprehensive Performance Test Plan for Rotary Kiln Incinerator Unit 4 in Accordance with 40 CFR §63 Subpart EEE

Prepared for:

Veolia ES Technical Solutions, L.L.C.
7 Mobile Avenue
Sauget, IL 62201

Prepared by:

URS Corporation
9400 Amberglen Blvd.
Austin, TX 78729

Revised
September 25, 2013

Table of Contents

Page

1.0 Introduction 1-1
1.1 Program Summary 1-1
1.2 Facility/Unit Identification 1-2
1.2.1 General 1-2
1.2.2 Facility ID, Mailing Address, and Primary Contacts 1-2
1.2.3 Incinerator Overview 1-3
1.3 Purpose and Objectives of the Performance Test 1-3
1.3.1 General 1-3
1.3.2 Test Protocol Summary 1-5
1.4 Performance Test Plan Organization 1-8

2.0 Engineering Description 2-1
2.1 Process Overview 2-1
2.2 Waste Feed Systems 2-1
2.2.1 Unit 4 Liquid Waste Feed System and Blending Operations 2-1
2.2.1.1 Organic and Aqueous Liquid Waste Feeds 2-3
2.2.1.2 Packaged and Bulk Solids 2-3
2.2.1.3 Specialty Liquid Feeds 2-4
2.3 Manufacturer, Make and Model of the Incinerator 2-4
2.3.1 Combustion Chamber and Burners 2-4
2.3.2 Secondary Combustion Chamber 2-6
2.3.3 Location of Combustion Zone Temperature Device 2-6
2.3.4 Hazardous Waste Residence Time 2-7
2.3.5 Combustion System Leak 2-7
2.3.6 Emergency Safety Vent 2-8
2.4 Procedures for Rapidly Stopping Hazardous Waste Feed and Controlling Emissions During Equipment Malfunction 2-8
2.5 Air Pollution Control Equipment 2-9
2.5.1 Air Pollution Control System Descriptions 2-9
2.5.1.1 Tempering Chamber 2-9
2.5.1.2 Lime System 2-10
2.5.1.3 Spray Dry Absorber 2-11
2.5.1.4 Fabric Filter 2-12
2.5.1.5 Carbon Injection 2-13
2.5.1.6 Induced Draft Fan and Stack 2-13
2.6 Stack Emissions Monitoring 2-15
2.6.1 CEM System Description 2-15
2.7 Process Monitoring and Control 2-16
2.8 Automatic Waste Feed Cut-off System 2-19
2.8.1 AWFCO System Testing 2-19

Table of Contents (continued)

Page

2.9 Air Pollution Control Equipment Maintenance Practices 2-20
2.9.1 Program Overview 2-20
2.9.2 Test Program Preparation Activities 2-21

3.0 Incinerator Feed Stream Descriptions 3-1
3.1 General 3-1
3.2 High Volume Wastes 3-2
3.2.1 Liquid Wastes 3-2
3.2.2 Bulk Solids 3-2
3.2.3 Containerized Waste 3-2
3.2.4 Gaseous Wastes 3-2
3.3 Auxiliary Fuels 3-2

4.0 Performance Test Protocol 4-1
4.1 General Description 4-1
4.2 Performance Standards 4-1
4.3 Test Condition 4-2
4.3.1 Maximum Feedrate of Ash 4-2
4.3.2 Maximum Feedrate of Metals and Chlorine, Maximum Waste Feedrates, Minimum Carbon Feedrate 4-3
4.4 Establishing Operating Parameter Limits 4-7
4.5 Waste Feed Spiking 4-10
4.5.1 Inorganic Constituents 4-11
4.5.2 Spiking for the LVM Category 4-13
4.5.3 Spiking for the SVM Category 4-13
4.5.4 Spiking for Mercury 4-13
4.5.5 Spiking for Chlorine Loading 4-13
4.5.6 Spiking for Ash Loading 4-14
4.6 Metals Extrapolation Method 4-14
4.7 Description, Preparation, and Delivery of Feeds for the Performance Test 4-16
4.8 Testing During Cleaning Cycles 4-16
4.9 Conditioning Time Needed to Reach Steady State 4-17
4.10 AWFCO System During the Test 4-17
4.11 Anticipated Test Schedule 4-17
4.12 Reporting 4-23

Table of Contents (continued)

Page

5.0 Sampling, Analysis, and Monitoring Procedures.....5-1
5.1 Sampling Locations and Procedures.....5-1
5.1.1 Liquids Sampling Procedures.....5-1
5.1.2 Solids Sampling Procedures.....5-6
5.1.3 Stack Gas Sampling Procedures.....5-7
5.1.3.1 Sample Port Location.....5-7
5.1.3.2 EPA Methods 2 and 4(Flowrate and Moisture).....5-7
5.1.3.3 EPA Method 29(Metals).....5-7
5.1.3.4 EPA Method 5(PM).....5-8
5.1.3.5 Modified EPA Method 26A (HCl/Cl_2).....5-9
5.1.3.6 SW-846 Method 0023A (Dioxins/Furans).....5-9
5.1.3.7 Continuous Emissions Monitoring(THC, CO_2, CO and O_2).....5-10
5.2 Analysis Procedures.....5-11
5.2.1 Composition and Physical Parameters Analysis.....5-11
5.2.2 Metals Analysis.....5-12
5.2.3 Particulate Matter Analysis.....5-12
5.2.4 HCl and Cl_2 Analysis.....5-12
5.2.5 Dioxins/Furans Analysis.....5-12
5.3 Process Monitoring Procedures.....5-12
5.4 Quality Assurance/Quality Procedures.....5-13
5.4.1 Sampling QA/QC.....5-15
5.4.2 Procedures for Analytical Quality Control.....5-16

APPENDIX A Continuous Monitoring System Performance Evaluation Test Plan

List of Tables

Page

1-1 Applicable HWC MACT Emission Standards....1-4
1-2 Data Used to Establish OPLs....1-7
1-3 Cross References of Performance Test Requirements....1-9

2-1 Technical Information Summary on Unit 4....2-5
2-2 Unit 4 Continuous Emission Monitors....2-15
2-3 Current HWC MACT AWFCO Parameters for Unit 4....2-18

3-1 Summary of Major HAPs Processed....3-1
3-2 Top Volume Liquid Waste Streams....3-3
3-3 Top Bulk Solid Waste Streams....3-3
3-4 Top Containerized Solid Waste Streams....3-4
3-5 Typical Properties for Natural Gas....3-4

4-1 Target Feedrates and Operating Conditions....4-5
4-2 HWC MACT OPLs to be Established During the Comprehensive Performance Test....4-6
4-3 Emission Standards versus Operating Parameters....4-7
4-4 Metals Evaluation Plan....4-12
4-5 Daily Schedule for the Subsequent CPT of Unit 4....4-20

5-1 Measurement Frequency....5-3
5-2 Sampling Methods....5-4
5-3 Summary of Analytical Methods....5-11
5-4 Summary of Matrix Specific QC Sample Requirements....5-14

Figure List

Page

2-1 Unit 4 Process Flow Diagram....2-2
2-2 Hydrated Lime Specifications....2-10
2-3 Carbon Specifications....2-14

1.0 Introduction

1.1 Program Summary [40 CFR § 63.1207(f) and § 63.7(c)(2)(i)]

Veolia ES Technical Solutions, L.L.C. (Veolia) operates three incinerators at its Sauget, Illinois facility. Two of the incinerators are fixed hearth units (Units 2 and 3), and the third incinerator is a rotary kiln unit (Unit 4). All of the incinerators treat certain wastes that are classified as hazardous under state and/or federal regulations, and are subject tothe National Emission Standards for Hazardous Air Pollutants (NESHAPs) for Hazardous Waste Combustors (Title 40 of the Code of Federal Regulations, Part 63 [40 CFR Part 63], Subpart EEE), (i.e., the HWC MACT).

In August and September of 2008, Veolia conducted tests of Units 2, 3, and 4 required by the information collection requests from U.S. EPA Region 5 dated June 5, 2008 and September 12, 2008. Those tests began on August 11, 2008 for Unit 2, August 5, 2008 for Unit 3, and August 21, 2008 for Unit 4. The test plans for these tests were approved by U.S. EPA Region 5. The tests were designed to demonstrate compliance with the applicable emission standards of the HWC MACT for metals codified at 40 CFR § 63.1219(a)(2), 40 CFR § 63.1219(a)(3), and 40 CFR § 63.1219(a)(4) for mercury, cadmium and lead (i.e., Semivolatile Metals – SVM), and arsenic, beryllium, and chromium (i.e., LowVolatility Metals - LVM). The tests also established Operating Parameter Limits (OPLs) for mercury, and SVM and LVM codified at 40 CFR § 63.1209(l) and 40 CFR § 63.1209(n), respectively.

The initial Comprehensive performance tests of Units 2, 3, and 4 commenced on December 8, 2009 for Unit 2; on December 1, 2009 for Unit 3; and on December 16, 2009 for Unit 4. The Comprehensive Performance Tests were performed in accordance with Comprehensive Performance Test Plans approved by U.S. EPA Region 5 on November 25, 2009. The HWC MACT, at 40 CFR § 63.1207(d), states *"The date of commencement of the initial comprehensive performance test is the basis for establishing the deadline to commence the initial confirmatory performance test and the next comprehensive performance test. You may conduct performance testing at any time prior to the required date. The deadline for commencing subsequent confirmatory and comprehensive performance testing is based on the date of commencement of the previous comprehensive performance test."* Veolia Sauget understands that U.S. EPA Region 5's position regarding commencement of the subsequent CPTs is based on the initiation of the metals tests performed in 2008, stating in a letter dated August 3, 2012 —Veolia must submit to EPA a notification of intent to conduct a CPT and a site-specific test plan for the CPT at least one year before the performance test. 40 CFR § 63.1207(e)(1)(i)…by September 5, 2012‖. Veolia submitted to EPA its notification of intent and site-specific test plan for the subsequent CPT by this date.

This document is a Comprehensive Performance Test Plan for Unit 4 for the subsequent comprehensive performance test (CPT). Veolia Sauget started the CPTs of the three incinerators at the Sauget facility on September 4, 2013 with the performance of the RATA of the CO and O_2 continuous monitoring systems (CEMS) of Unit 4. The RATA of the CO and O_2 CEMS of Unit 3 was performed on September 5, 2013, and the RATA of the CO and O_2 CEMS of Unit 2 was performed on September 6, 2013. All of the applicable parameters of the HWC MACT including dioxins/furans, total hydrocarbons (THC), carbon monoxide (CO), particulate matter (PM), hydrogen chloride/chlorine gas (HCl/Cl_2), mercury, SVM, and LVM will be determined during the CPT.

Per 40 CFR §63.1206(b)(7)(i)(A), compliance with the DRE standard is required to be demonstrated only one time, and Veolia Sauget demonstrated DRE during RCRA Trial Burns of Units 2, 3, and 4 performed in January 1993, November 1996, and December 1995, respectively. The HWC MACT requires that DRE only be demonstrated one time as long as—you do not feed hazardous waste at a location in the combustion system other than the normal flame zone‖ (§ 63.1207(c)(2)(iv)). Veolia will not re-demonstrate DRE for Unit 4 in the subsequent CPT. DRE, and the associated OPLs, were demonstrated during the 1995 trial burn, and operations of the incinerator have not significantly changed since that test.

This test (i.e., the subsequent CPT) is designed to demonstrate applicable emission standards and establish OPLs as required by the HWC MACT for dioxins/furans, total hydrocarbons (THC), carbon monoxide (CO), particulate matter (PM), hydrogen chloride/chlorine gas (HCl/Cl_2), mercury, SVM, and LVM. The results of this test will be used to revise the current NOC.

1.2 Facility/Unit Identification

1.2.1 General

This Comprehensive Performance Test Plan has been designed to demonstrate applicable emission standards and establish OPLs as required by the HWC MACT for mercury, SVM, and LVM. This is a commercial hazardous waste incineration facility that treats liquid and solid wastes that are classified as both hazardous and non-hazardous.

1.2.2 Facility ID, Mailing Address, and Primary Contacts

The facility address is:

Veolia ES Technical Solutions
7 Mobile Avenue
Sauget, IL 62201
Facility ID#: ILD098642424

The facility contact is:

Mr. Dave Klarich
Phone: 618-271-2804
Email: David.Klarich@veoliaes.com

1.2.3 Incinerator Overview

Unit 4 is a rotary kilnincineration system with primary and secondary combustion chambers that treats solid wastes as well as aqueous and organic liquids. The process is monitored and controlled by a distributed control system (DCS) capable of continuously monitoring the process to assure all operational parameters are within regulatory and permit limits while waste is being fed to the unit. In addition, this incinerator is equipped with a Continuous Emissions Monitoring System (CEMS) that continuously samples the exhaust gases for carbon monoxide and oxygen in the stack gas exhaust stream.

1.3 Purpose and Objectives of the Performance Test

1.3.1 General

This document presents Veolia's plan for the subsequent CPT for the Final Replacement Standards of the HWC MACT and is designed to demonstrate compliance with the standards and associated OPLs of the HWC MACT for existing incinerators at §63.1219. The CPT is designed to:

- Demonstrate that the incinerator meets the applicable HWC MACT emission limits while treating hazardous waste; and
- Re-establish operating parameter limits (OPLs) on key operating variables that will ensure that the incinerator operates within the HWC MACT emission limits while treating hazardous waste.

The test program will include feeding a variety of liquid and solid waste materials to the incinerator, sampling and analyzing the feed streams, spiking waste feed streams with metals and chlorine,monitoring certain process parameters, and conducting emissions testing. The emissions standards that will be demonstratedunder the HWC MACT regulations are summarized in Table 1-1.

Table 1-1. Applicable HWC MACT Emission Standards

Emissions Parameter	Limit	Citation
Dioxins/Furans (TEQ basis)	≤ 0.40 ng/dscm	40 CFR § 63.1219(a)(1)(i)(B)
Mercury	≤ 130 µg/dscm	40 CFR § 63.1219(a)(2)
Semivolatile Metals (SVM) (Cadmium and Lead)	≤ 230 µg/dscm	40 CFR § 63.1219(a)(3)
Low Volatile Metals (LVM) (Arsenic, Beryllium and Chromium)	≤ 92 µg/dscm	40 CFR § 63.1219(a)(4)
Carbon Monoxide (CO)	≤ 100 ppmv, dry	40 CFR § 63.1219(a)(5)(i)
Total Hydrocarbons(THC)	≤ 10 ppmv, dry	40 CFR § 63.1219(a)(5)(ii)
Hydrogen Chloride & Chlorine (HCl/Cl_2)	≤ 32 ppmv dry, as Cl^-	40 CFR § 63.1219(a)(6)
Particulate Matter (PM)	≤ 0.013 gr/dscf	40 CFR § 63.1219(a)(7)
Destruction and Removal Efficiency (DRE)	≥ 99.99 %	40 CFR § 63.1219(c)(1)

Note: All emission concentrations are corrected to 7% oxygen.

The objectives for the subsequent CPT for the Final Replacement Standards of the HWC MACT are:

- Demonstrate compliance with stack gas emissions less than or equal to the following limits, corrected to 7% O_2:
  - Carbon Monoxide: 100 ppmv, dry;
  - Total Hydrocarbons: 10 ppmv, dry;
  - Dioxins/Furans: 0.40 ng TEQ/dscm;
  - Particulate Matter (PM): 0.013 grains/dscf;
  - Mercury: 130 µg/dscm;
  - Semivolatile Metals (SVM) (Cd and Pb combined): 230 µg /dscm;
  - Low Volatility Metals (LVM) (As, Be and Cr combined): 92 µg /dscm; and
  - Hydrogen Chloride/Chlorine (HCl/Cl_2): 32 ppmv as Cl^- equivalent, dry.
- Compliance with the DRE standard (99.99% DRE) is demonstrated using data from a previous RCRA Trial Burn.
- Establish limits for operating parameters.
- Conduct a Continuous Monitoring System (CMS) performance evaluation test.
- Conduct a Relative Accuracy Test Audit (RATA) for the CO and O_2 Continuous Emissions Monitoring Systems (CEMS) if a RATA of the CO and O_2 CEMS does not occur within 60 days of the CPT.

1.3.2 Test Protocol Summary

A brief description of the objectives of the subsequent CPT is provided below, and a definition of the applicable emission limits and the resulting operating parameter limits (OPLs) are given in Section 4.0. The test condition of the subsequent CPT of Unit 4 will include one mode of operation, and one set of OPLs will be developed.

In the first part of the test, Veolia will demonstrate compliance with the particulate matter standard of the HWC MACT while the plant is operating to establish the maximum ash feedrate and maximum combustion gas flowrate OPLs as required by the HWC MACT for the particulate matter standards. Compliance with the standard for carbon monoxide will also be demonstrated during this test.

In the second part of the test, Veolia will demonstrate compliance, and develop OPLs, with HCl/Cl_2, dioxins/furans, THC, CO, LVM, SVM, and the mercury standards of the HWC MACT while the plant is operating to establish maximum total hazardous waste feedrate, maximum pumpable hazardous waste feedrate, minimum primary combustion chamber (PCC) temperature, minimum secondary combustion chamber (SCC) temperature, maximum LVM, SVM, and Hg feedrates, maximum chlorine feedrate, maximum combustion gas flowrate, and maximum inlet temperature to the baghouse. Ash will be fed to the incinerator at normal (or higher) levels during this test. Compliance with the standard for carbon monoxide will also be demonstrated during this test. Although Veolia will be establishing a minimum PCC temperature during this part of the test, the incinerator will be operated at normal temperatures, which will be higher than the current minimum PCC temperature OPL, and will use the average temperature of the runs to establish the new PCC temperature OPL.

Per 40 CFR §63.1206(b)(7)(i)(A) compliance with the DRE standard is required to be demonstrated only one time and Veolia demonstrated DRE for Unit 4 in a December 1995 RCRA trial burn. Veolia will not re-demonstrate DRE for Unit 4 in the subsequent CPT for the Final Replacement Standards of the HWC MACT. DRE, and the associated OPLs, were demonstrated during the 1995 trial burn, and operations of the incinerator have not significantly changed since that test. The resulting OPLs associated with the standard for DRE, from the NOC, are:

- Maximum Total Pumpable Waste Feedrate to the Kiln 3,312 lb/hr;
- Maximum Total Pumpable Waste Feedrate to the SCC 1,788 lb/hr;
- Maximum Total Waste Feedrate to the Kiln 18,667 lb/hr;
- Maximum Total Waste Feedrate to the SCC 1,788 lb/hr;
- Minimum Stack Gas Flowrate 44,900 acfm;
- Minimum Temperature in the Primary Combustion Chamber 1,415°F; and
- Minimum Temperature in the Secondary Combustion Chamber 1,798°F.

Per 40 CFR §63.1209(i), when an operating parameter applicable to multiple standards is demonstrated in performance tests not performed simultaneously, the most stringent limit applies. The OPLs required for DRE and for dioxins/furans are the same. The OPLs for maximum pumpable hazardous waste feedrate, maximum total hazardous waste feedrate, minimum temperature in the PCC, minimum temperature in the SCC, and maximum stack gas flowrate will be the more stringent demonstrated in the 1993 trial burn and the subsequent CPT. The OPL for maximum stack gas flowrate will be the most stringent demonstrated in the 1993 trial burn and the first and second portions of the subsequent CPT.

THC is typically demonstrated in conjunction with DRE. The OPLs for THC (i.e., minimum combustion chamber temperature in the primary combustion chamber, minimum combustion chamber temperature in the secondary combustion chamber, maximum flue gas flowrate, maximum pumpable hazardous waste feedrate, and maximum total waste feedrate) are the same as the OPLs for DRE (that the same for dioxins/furans). Even though DRE will not be demonstrated, THC will be demonstrated during the subsequent CPT of Unit 4 during the second part of each test run of the CPT.

The CPT will be performed to demonstrate compliance and establish OPLs for targeted standards, recognizing that per 40 CFR §63.1209(h)(1),—if the performance tests…are not performed simultaneously, the most stringent limit for a parameter derived from independent performance tests applies||. Operating conditions during the subsequent CPT represent the —extreme range of normal|| conditions which will allow for establishment of HWC MACT OPLs that provide adequate operational flexibility. The operating parameter data will be used as shown in Table 1-2 to develop HWC MACT OPLs. Wastes utilized during the CPT will be typical of the wastes normally treated in Unit 4. The constituent spiking approaches are presented in Section 4.5. Upon completion of the subsequent CPT, a Notification of Compliance (NOC) will be prepared, and the OPLs of this NOC will replace those in the current NOC.

Table 1-2. Data Used to Establish OPLs

Demonstrated OPLs	Emission Parameters to be Demonstrated During the CPT	
Maximum Pumpable Waste Feedrate	DRE	1995
	THC	✓
	Dioxins/Furans	✓
Maximum Total Waste Feedrate	DRE	1995
	THC	✓
	Dioxins/Furans	✓
Maximum Stack Gas Flowrate	SVM	✓
	LVM	✓
	PM	✓
	HCl/Cl_2	✓
	DRE	1995
	THC	✓
	Dioxins/Furans	✓
Minimum Combustion Chamber Temperature in the Rotary Kiln	DRE	1995
	THC	✓
	Dioxins/Furans	✓
Minimum Combustion Chamber Temperature in the SCC	DRE	1995
	THC	✓
	Dioxins/Furans	✓
Maximum Total Feedrate of LVM (As, Be, Cr)	LVM	✓
Maximum Pumpable Feedrate of LVM (As, Be, Cr)	LVM	✓
Maximum Feedrate of SVM (Pb, Cd)	SVM	✓
Maximum Feedrate of Mercury (Hg)	Hg	✓
Maximum Feedrate of Ash	PM	✓
Maximum Feedrate of Total Chlorine/Chloride	HCl/Cl_2	✓
	LVM	✓
	SVM	✓
Maximum Baghouse Inlet Temperature	THC	✓
	Dioxins/Furans	✓
	LVM	✓
	SVM	✓
Minimum Carbon Feedrate	Dioxins/Furans	✓
	Hg	✓
Minimum Sorbent Feedrate	HCl/Cl_2	✓
Minimum Carrier Fluid Flowrate	HCl/Cl_2	✓

1995 – December 1995 RCRA Trial Burn

1.4 Performance Test Plan Organization

This test plan has been organized in a format typically used for compliance demonstration test programs. Table 1-3 is included so that the requirements in the HWC MACT rule can be cross-referenced with the sections in this plan. The remainder of the document has been organized as follows:

- **Section 2.0** provides a general physical description of the fixed hearth incineration system and associated unit operations (including the air pollution control system) as well as an overview of the automatic waste feed cutoff (AWFCO) system and maintenance procedures.
- **Section 3.0** presents a brief discussion of the physical and chemical parameters of the waste streams treated in the incinerator that impact thermal oxidation and summarizes the hazardous air pollutants presently identified in the waste streams.
- **Section 4.0** presents the Test Protocol including planned feed and operating conditions, rationale for the test design, anticipated test schedule, and final report format.
- **Section 5.0** presents the sampling and analysis that will be performed during the test and provides an overview of the QA/QC protocols that will be followed. A Quality Assurance Project Plan (QAPjP) has been prepared for the tests of Units 2, 3, and 4, and fully describes all sampling and analysis procedures and associated QA/QC protocols. The QAPjP is provided as a separate document.

Appendix A contains the Continuous Monitoring System Performance Evaluation Test Plan (CMS PETP) to be performed in conjunction with the CPT of Unit 4.

Table 1-3. Cross Reference of Performance Test Requirements

Topic	Regulatory Citation	Section in this Document
Program Summary	40 CFR § 63.1207(f) and § 63.7(c)(2)(i)	1.1
Test Schedule	40 CFR § 63.1207(f), (f)(1)(v) and § 63.7(c)(2)(i)	4.11
Data Quality Objectives (DQOs)	40 CFR § 63.1207(f) and § 63.7(c)(2)(i)	QAPjP – 3.0
Internal and External Quality Assurance Plan	40 CFR § 63.1207(f) and § 63.7(c)(2)(i)	QAPjP – 9.0 & 12.0
Analysis of Feedstreams (as fired) Heating value, ash content, semi-volatile metals, low volatile metals, mercury and total chlorine Viscosity Identification and quantification of reasonably expected HAPs	40 CFR § 63.1207(f)(1)(i) 40 CFR § 63.1207(f)(1)(i)(A) 40 CFR § 63.1207(f)(1)(i)(B) 40 CFR § 63.1207(f)(1)(ii)(A) & (B)	3.0
Detailed Engineering Description of Combustor Manufacturer/make/model of HWC Type of HWC Maximum design capacity Feed systems Location of combustion zone temperature device Hazardous waste AWFCO system Design, operation and maintenance of APC Justification of alternative gas flowrate measurement technique Design, operation and maintenance of stack gas monitoring systems	 40 CFR § 63.1207(f)(1)(iii)(A) 40 CFR § 63.1207(f)(1)(iii)(B) 40 CFR § 63.1207(f)(1)(iii)(C) 40 CFR § 63.1207(f)(1)(iii)(D) & (E) 40 CFR § 63.1207(f)(1)(xix) 40 CFR § 63.1207(f)(1)(iii)(F) 40 CFR § 63.1207(f)(1)(iii)(G) 40 CFR § 63.1207(f)(1)(xvii) 40 CFR § 63.1207(f)(1)(iii)(H)	2.0 2.3 2.3 2.3 2.2 2.3.3 2.8 2.5 N/A 2.6
Description of Waste Handling and Blending Operations	40 CFR § 63.1207(f)(1)(ii)(C)	2.2.1
Detailed Test Protocol Including: Description of sampling, monitoring and analytical procedures Description of Planned Feed and Operating conditions during the Performance Test	 40 CFR § 63.1207(f)(1)(iv) 40 CFR § 63.1207(f)(1)(vi) & (vii)	 5.0 4.0
Procedures for Rapidly Stopping Hazardous Waste Feed and Controlling Emissions during Malfunction	40 CFR § 63.1207(f)(1)(viii)	2.3.6
Determination of Hazardous Waste Residence Time	40 CFR § 63.1207(f)(1)(ix)	2.3.4
Metal Feedrate Limit Extrapolation (if used)	40 CFR § 63.1207(f)(1)(x)	4.6
CMS and CEMS performance evaluation plans	40 CFR § 63.8(e)(4) and 1207(b)(1)	Appendix A
Documentation of Expected Levels of Regulated Constituents in Other Feedstreams that are not Analyzed	40 CFR § 63.1207(f)(1)(xi)	3.0
Documentation of Testing during Cleaning Cycle	40 CFR § 63.1207(g)(1)(i)(C)	4.8
Documentation of Conditioning Time Needed to Reach Steady State Prior to Testing	40 CFR § 63.1207(f)(1)(xii)	4.9
Alternative Monitoring Frequency for Wet Scrubbers (if used)	40 CFR § 63.1207(f)(1)(xxiii)	N/A
Other Information Deemed Necessary by the Agency	40 CFR § 63.1207(f)(1)(xxvii)	---

2.0 Engineering Description

2.1 Process Overview

Veolia operates two Fixed Hearth Dual Chambered Incinerators (Units 2 and 3) and one rotary kiln incinerator (Unit 4) at the Sauget, IL facility. The two fixed hearth units are rated at 16 million Btu/hr each. Incineration Unit No. 3 is a mirror image of Unit No. 2. Both of these units have their own waste handling systems as described in the sections that follow. The only difference being Unit No. 2 is equipped with four (4) baghouse modules, while Unit No. 3 is equipped with three (3) baghouse modules. However, each incinerator is operated identically with only three baghouse modules in service during operation. Unit 4 is rated at 50 million Btu/hr and is equipped with its own tank farm system, drum storage, bulk solids storage and feed systems.

A process flow diagram for Unit4 is presented in Figure 2-1.

2.2 Waste Feed Systems [40 CFR § 63.1207(f)(1)(ii)(c) and (f)(1)(iii)(D) and (E)]

2.2.1 Unit 4 Liquid Waste Feed System and Blending Operations

The Unit 4 Rotary Kiln can incinerate any of the waste that Veolia is authorized and permitted to receive. All physical forms of wastes will be handled and fed by the system's waste feed devices. Liquids will be fed to either the kiln or the Secondary Combustion Chamber (SCC). Bulk solid wastes will be fed to the kiln through the ram feeder. Containerized wastes will be fed to the kiln through the ram feeder or the auxiliary ram feeder. This unit can receive any combination of wastes -- liquid, semi-solid, or solid -- with a heat value of up to 50 million Btu/hr.

Unit 4 is supported by storage tanks located in Tank Farm #3. These tanks are used to store the liquid organic waste, aqueous wastes, and pumpable sludges to be fed to the system. Unlike Tank Farm #1, all of the tanks in Tank Farm #3 can be used as feed tanks to the incinerator. Several criteria are important in designing a blend from received wastes. These include compatibility, proper range of heating value, and permit restrictions regarding elemental composition (based on emission limitations). Pumps to transfer these wastes to the system are installed in the tank farm. The material is transferred through aboveground pipelines from the tank farm to the incinerator. Pipelines used to transfer liquid organic waste and aqueous waste are equipped with strainers.

Figure 2-1. Unit 4 Process Flow Diagram

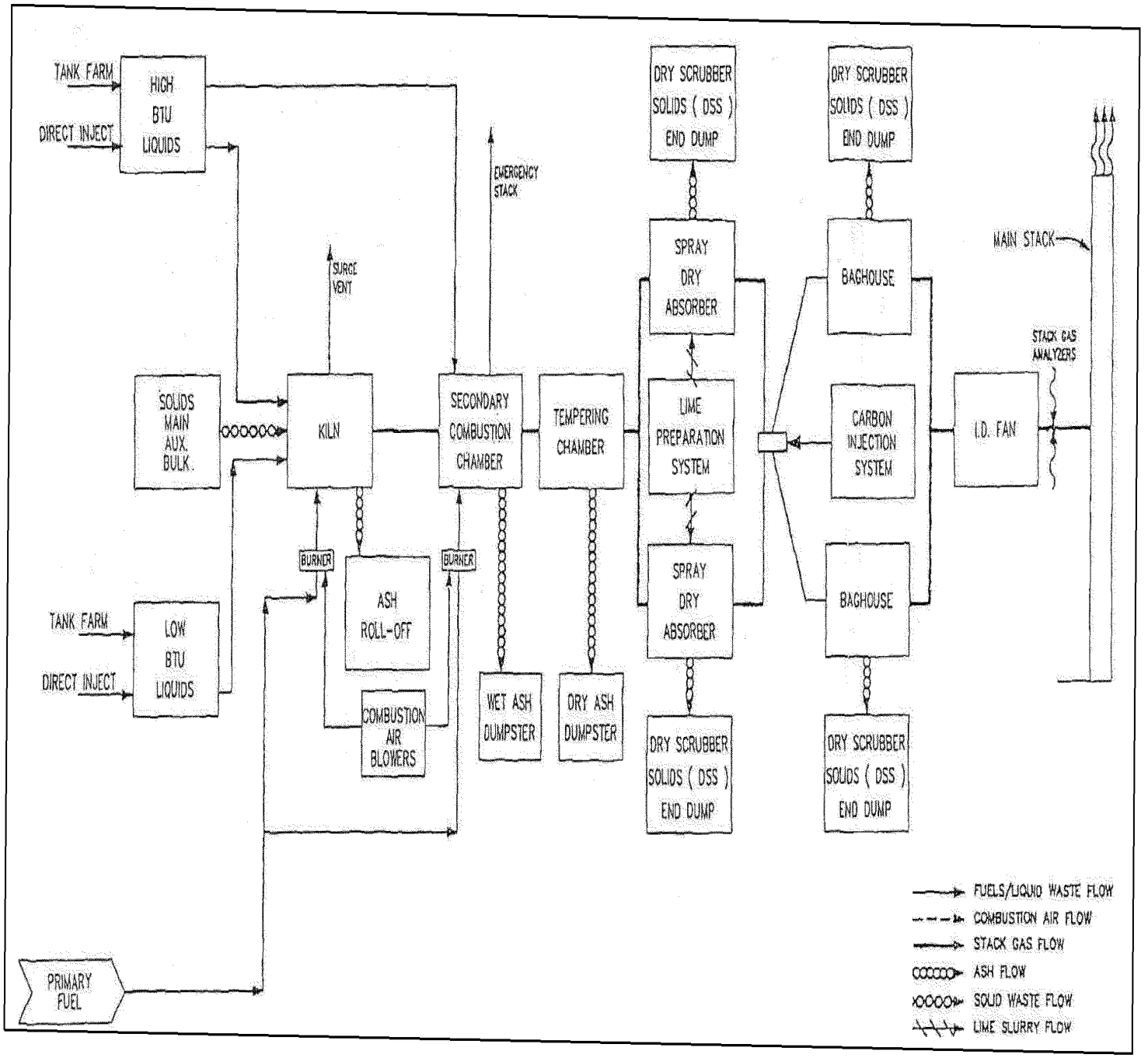

In compliance with the Benzene NESHAP, all tanks are vented to individual carbon adsorption canisters for removal of organics before vapor is discharged to the atmosphere. Each carbon adsorber canister is essentially equivalent to a 55 gallon container or greater, if necessary. All tanks are equipped with conservation vents, in addition to the carbon canister adsorber. All tanks are grounded, and flame arrestors are installed between the carbon adsorbers and the tanks.

2.2.1.1 Organic and Aqueous Liquid Waste Feeds

The liquid waste injectors used in the combustion chambers are air-atomizing injectors. These are used for injection of pumpable sludges, aqueous wastes and organic liquid wastes to the kiln and for injection of organic liquid waste to the SCC. Dual fluid injection nozzles will be used for atomization of the waste. Each of the injectors is rated at 0-300 gph. The liquid waste feed nozzles are served by parallel redundant pumps and recirculation systems with back pressure control.

2.2.1.2 Packaged and Bulk Solids

Containers of wastes are sampled and analyzed after receipt in accordance with the facility's HWC MACT Feedstream Analysis Plan and RCRA Waste Analysis Plan. These wastes can then be delivered directly to Unit 4 or repacked into small combustible containers at the facility. Repackaged containers are delivered to, and staged, in the Container Storage Unit No. 6 adjacent to the Unit 4 incinerator. When scheduled for feeding to the system, the containers of waste are transferred by forklifts to the feed conveyors serving Unit 4.

Bulk solids and non-pumpable wastes are delivered and discharged into waste feed bins in the Bulk Solids Storage Building after being received, sampled, and analyzed. A clamshell operating from an overhead crane is used to transfer these wastes from the bins to the feed hoppers discharging to the system's ram feeder. The weigh hopper is equipped with weigh cells so each charge of waste can be weighed before it is discharged into the ram feeder. Fugitive emissions are controlled by a baghouse, cyclone, and carbon adsorption system connected to this system.

The ram feeder is a 25-inch wide by 42 inch high (inside dimensions) rectangular tube operated by a hydraulically driven ram. The ram tube is equipped with a vertical, hydraulically operated charge door near the kiln end. This door is opened before the ram begins advancing to push a charge into the kiln. After the ram has fully retracted, a limit switch triggers the door to close so as to protect the ram feeder from the kiln's radiant heat. The ram is capable of operating from 0-30 cycles/hour.

The top face of the ram feeder has a 2‘ x 2‘ opening which receives waste charges from the hopper. The ram feeder isolation gate, the charge door, and the ram operate in sequence. At the beginning of a cycle, the ram is fully retracted. On a—start|| command from the operator or the programmable controller, the ram feeder isolation gate opens to receive a charge of waste from the hopper. The gate then closes, the charge door opens, and the ram begins its advance. Once the ram reaches its full extension, it begins to retract. When the ram is fully retracted, the charge door is closed and the cycle can be repeated. This system‘s sequenced operation combined with the negative pressure in the kiln prevent fugitive emissions from escaping the kiln ram feeder system.

The ram feeder also receives containers of wastes delivered by an auxiliary feed system. The auxiliary feed conveyor is capable of handling charge weights of 1 to 100 pounds. The system is capable of handling charge sizes up to 24 inches in diameter and 24 inches tall. The auxiliary feed conveyor is capable of making 60 charges an hour or one complete cycle every minute.

2.2.1.3 Specialty Liquid Feeds

The Specialty Feed System associated with Unit 4 is a Direct Inject Liquid Feed System.

2.3 Manufacturer, Make and Model of the Incinerator [40 CFR § 63.1207(f)(1)(iii)(A)]

2.3.1 Combustion Chamber and Burners [40 CFR §63.1207(f)(1)(iii)(B) and (C)

Unit 4 features a two-stage combustion process. Ignition of waste material takes place in the kiln, or primary combustion chamber (PCC). The current OPL for the minimum temperature of PCC is 1,499°F. A secondary combustion chamber (SCC) serves as an—afterburner|| for process gases and is also permitted to incinerate high Btu liquid waste. Ignition of the waste takes place at temperatures in excess of 1,600°F. The current OPL for the minimum temperature of the SCC is 1,886°F.

The rotary kiln is fabricated of carbon steel. It has approximate dimensions of 8‘8|| O.D. X 35‘ long. It is supported on a one-degree slope by two steel tires or riding rings. Each riding ring rides on two pairs of steel trunnions and have an approximate outside diameter of 9 feet 5 inches. The thickness and face width of the trunnions are approximately 6 inches and 9 inches, respectively. Table 2-1 provides a summary of the incinerator design specifications.

Table 2-1. Technical Information Summary for Unit4

Manufacturer	**Trade Waste Incineration**	
Model No.	TWI-2000, Series 2	
Type	Rotary Kiln	
Date of Manufacture	1989	
Dimensions	**Primary Chamber**	**Secondary Chamber**
External Length	35‘	48‘6‖
External Diameter	8‘8‖	10‘6‖
Internal Diameter	7‘	9‘
Cross-sectional Area	38 square feet	64 square feet
Burners	Primary Chamber Burner	Secondary Chamber Burner
Manufacturer	North American	Trane Thermal
Size	12.0 Million Btu/hr	30 Million Btu/hr
Fuel	Natural Gas	Natural Gas
Prime Mover	Induced Draft Fan 4,000 acfm @ 400 °F saturated, 20 in. water column	

The kiln is lined with approximately 7 ½ inches of dense abrasion-resistant high-alumina firebrick refractory. With this refractory system, the kiln has an inside diameter of approximately 7 feet and a length of approximately 35 feet, an integral cross-section area of approximately 38 square feet and an internal volume of approximately 1,346 cubic feet.

All kiln feeds will enter through the upper kiln face plate which is located on the feed end of the kiln. The plate contains a primary burner, three liquid feed nozzles (for pumpable sludge, aqueous waste, and high Btu liquid waste), a ram feeder and a surge vent.

The primary burner is equivalent to a North American _Fuel Directed‘ burner of 25 MM Btu/hr. and burns No. 2 fuel oil or natural gas. The burner system is supplied with approximately 4,000 acfm combustion air at a static pressure of 20‖ water column (WC). The pilot for the primary burner will burn natural gas.

The fuel system for the kiln (and secondary combustion chamber) is controlled by a Factory Mutual approved burner management system complete with interlocks and safety valves.

2.3.2 Secondary Combustion Chamber

The SCC is a vertical, cylindrical chamber having approximate dimensions of 10‘-6|| O.D. x 71‘ high. It is fabricated of carbon steel and lined with an inner course (hot face) of approximately six inches of high alumina refractory and an outer course of approximately two inches of insulating refractory. With this installed refractory, the SCC has an inside diameter of approximately nine feet. The effective length (gas retention length) of the chamber is approximately 48‘ - 6||. Consequently, the SCC has a cross-section area of 64 square feet and an effective volume of approximately 3,084 cubic feet. At maximum combustion gas flows, the combustion gas residence time is greater than two seconds.

Combustion gases from the kiln enter the bottom of the SCC through a refractory-lined side duct and exit from the top of the SCC through a refractory-lined duct to the tempering chamber. The floor of the chamber is sloped to facilitate the removal of ash and solids through a slag tap.

The SCC is equipped with one burner mounted on the sidewall of the chamber near the bottom. The burner is a Trane Thermal Model, or equivalent, with a design heat release of approximately 30 million Btu/hr. This burner is supplied with No. 2 fuel oil or natural gas and combustion air.

As with the kiln burner, the SCC burner is supplied with atomizing air and is equipped with a burner management system. This system controls the ignition and initiates an automatic shutoff when there is a loss of flame, combustion air supply, and fuel pressure, atomizing air pressure, pilot burner or ID fan.

The SCC burner is a high-intensity, vortex type unit with a spin vane assembly, located within the wind box to impart an intense rotary motion to the combustion air. This rotary motion and the burner design provide complete mixing of air and fuel, and recirculation of the gases within the combustion chamber promotes rapid combustion and high heat intensity.

2.3.3 Location of Combustion Zone Temperature Device [40 CFR § 63.1207(f)(1)(xix)]

The pyrometer that monitors temperature in the rotary kiln is located top-center in the transition section between the rotary kiln and the SCC about two feet downstream from the exit of the kiln. The thermocouple that monitors temperature in the SCC is located on the west side of the chamber near the SCC exit duct.

2.3.4 Hazardous Waste Residence Time [40 CFR § 63.1207(f)(1)(ix)]

The hazardous waste gas residence time for the Unit 4 Rotary Kiln Incinerator is calculated as follows using the OPL for the stack gas flowrate in the current NOC

- Rotary Kiln Volume – 1,346 ft^3;
- Secondary Combustion Chamber Volume – 3,084 ft^3;
- Total Volume – 4,430 ft^3;
- Maximum Flue Gas Flowrate – 37,432 acfm (624 ft^3/sec); and
- Total Combustion Zone Residence Time = (4,430 ft^3) / (624 ft^3/sec = 7.1 sec.

Solids residence time in the Unit 4 kiln is dependent upon the kiln rotation rate, solids bed depth, and a number of other parameters set by design. The maximum solids hazardous waste residence time for the Unit 4 incinerator (i.e., in the rotary kiln) is 30 minutes based on calculations using an equation from Chemical Engineering Handbook, Perry's 5th Edition.

Based on the equation:

$$Ø = [(0.19L)/(NDS)]$$

Where:

Ø is the residence time in minutes,
L is the kiln length in feet,
N is the rotational speed in revolutions per minute,
S is the kiln slope in feet per feet, and
D is the internal diameter in feet.

Inserting the known values for L (35), N (2), S (0.0174), and D (6.5) result in a solids residence time for the rotary kiln of 30 minutes.

2.3.5 Combustion System Leak

The kiln itself is equipped with a double seal system that is comprised of overlapping, adjustable, stainless steel spring plates on both the feed and discharge ends of the kiln. The sealing edges of each plate are fitted with a sintered-metal wear shoe similar to a brake shoe with the inner seal resting on the kiln shell. The powdered metal formulation for the seal shoes include graphite granules, which make the shoes self- lubricating. The void between the seals and the outer shell of the kiln is pressurized to further prevent fugitive emissions. In addition to the kiln seal system, Unit 4 also utilizes an induced draft fan that maintains a vacuum of – 0.5 to – 1.0 inches water column while waste is being fired into the system.

2.3.6 Emergency Safety Vent

Unit 4 is equipped with two emergency vents, one located at the kiln inlet which acts as an emergency pressure relief, the second is located at the top of the SCC as a thermal relief vent.

The emergency vent at the kiln inlet would only be required for an occurrence that overwhelms the ability of the ID fan to control the pressure of the kiln. The vent and chute opening is designed such that waste from the bulk solids chute would not impede the escaping gas flow. A deflector separates the feed flow from the vent opening. The entrainment of solids through the surge vent is minimal. As an extra precaution, the exhaust opening of the vent is angled to provide a horizontal exit, thereby minimizing solids entrainment into the air. The vent is kept closed by weighted louvers. These louvers will open only if the pressure in the kiln suddenly rises beyond the compensating capacity of the ID fan. A limit switch on the louvers will automatically shut off all waste feeds to the kiln and SCC when the vent is opened.

The incinerator is also equipped with an emergency safety vent (ESV) located at the top of the secondary combustion chamber. This ESV is a refractory-lined emergency thermal relief vent (TRV) which is held in the closed position by a pneumatic cylinder. The control valve in the line supplying air to the cylinder and the cylinder vent valve which opens the TRV are located in the control room for each unit. Valve locks (with keys attached) are utilized to deter indiscriminate operation of these valves. Opening of the TRV allows hot combustion gas to vent from the combustion system during emergency shutdown events. The purpose of the TRV is to protect the downstream APCS from excessive temperature situations. A limit switch on the TRV shuts off all waste feeds to the system as it senses that the cap is opening.

2.4 Procedures for Rapidly Stopping Hazardous Waste Feed and Controlling Emissions During Equipment Malfunction [40 CFR §63.1207(f)(1)(viii)]

Equipment malfunctions are identified by the control system, observation of process control variables, or by regular field inspections.

In the event of minor equipment malfunctions (e.g. waste feed or scrubber leaks), the control room operator will be notified. The control room operator will then close the waste feed valves and disable the waste feed pumps.

In the event of major equipment malfunctions (e.g. fire), the emergency stop button located in the control room will be pushed. If this button is pushed, all equipment will switch to its fail-safe position.

The extent to which emissions can be controlled in an equipment malfunction is dependent upon the type of malfunction that occurs. Waste feeds are stopped in equipment malfunctions, and depending on the nature of the malfunction, the air pollution control system remains in operation. Emissions are controlled during malfunctions by stopping all waste feeds (may occur manually or automatically), maintaining combustion zone and scrubber system temperatures within OPLs, keeping the ESV in a closed state, and maintaining negative pressure in the combustion zones.

2.5 Air Pollution Control Equipment [40 CFR §63.1207(f)(1)(iii)(G)]

2.5.1 Air Pollution Control Systems Descriptions

The air pollution control system consists of a tempering chamber, two spray dryer absorbers, and fabric filter baghouse modules. The air pollution control system neutralizes acidic compounds and removes particulate from the exhaust gas. Two subsystems, the spray dryer absorber and the fabric filter, carry out the chemical neutralization and particulate removal functions, respectively. A third subsystem, the lime system, is used to prepare and provide lime slurry to the spray dryer absorber for use in the chemical neutralization process. The induced draft fan and stack provide the mechanical energy required to transport the flue gas through the interconnecting ductwork, to its eventual discharge point to atmosphere.

2.5.1.1 Tempering Chamber

The tempering chamber is a vertical, cylindrical unit designed to cool the combustion gases using a series of internal dual-fluid (water and air) spray nozzles. The combustion gases enter the top of the chamber, flow downward through the spray pattern and exit from the bottom of the chamber. The spray pattern is designed to eliminate direct contact of water with refractory, and the chamber is designed to maintain a dry bottom under all operating conditions. That is, the injection rate of spray water is controlled so that it is completely vaporized and carried out of the chamber in the combustion gases. The tempering chamber is approximately 49‘ high with 11‘ I.D. and is fabricated of ¼ inch nominal plate thickness carbon steel (ASTM A36) and lined with refractory. The spray nozzles and extensions are fabricated of 304 SS material.

The tempering chamber is sized so that a combustion gas retention time of greater than one second will be maintained at all gas flows. Because some molten particulate materials in the combustion gases are cooled in this process unit to below their fusion point, some solids are generated and collected in the chamber.

Therefore, the chamber has a cone bottom and a slide gate to facilitate the removal of solids. These solids are discharged onto a conveyor system, which transports them to a hopper.

2.5.1.2 Lime System

The lime system prepares lime slurry for use in the chemical neutralization process in sufficient supply and concentration to maintain continuous flue gas treatment in the spray dryer absorber. The system has been designed for batch mixing to provide this service. Veolia utilizes hydrated lime as its neutralizing agent in the air pollution control systems. The key neutralization parameter of the hydrated lime is the—CaO Equivalent‖. Figure 2-2 is the specification sheet for the hydrated lime that Veolia uses. Veolia has used this specific product for over 20 years and plans to continue with its use. Although, if Veolia does change suppliers or type of lime in the future, it would have a—CaO Equivalent‖ specification equal to or greater than the 72.6% shown on Figure 2-2.

Figure 2-2. Hydrated Lime Specifications

Mississippi Lime Company
General Offices
Alton, Illinois 62002

MISSISSIPPI ROTARY PLANT

Hydrated Lime

Code MP200

Meets AWWA and Water Chemicals Codex Specifications

Chemical Analysis

$Ca(OH)_2$	96.0%	to	97.2%
CaO Equivalent	72.8	to	73.6
CaO Total	73.8	to	74.3
$CaCO_3$	0.65	to	1.75
$CaSO_4$	0.05	to	0.10
S Equivalent	0.012	to	0.024
SiO_2	0.38	to	0.65
Al_2O_3	0.20	to	0.30
Fe_2O_3	0.07	to	0.10
MgO	0.40	to	0.55
Free H_2O	0.30	to	0.95
P_2O_5	0.008	to	0.012
MnO	0.0015	to	0.0025

Typical Physical Analysis

Minus 100 mesh	100.0%
Minus 200 mesh	98.5
Minus 325 mesh	92.0

Density - Pounds per ft^3 - 20 to 32 (Depending upon degree of compaction)

Hydrated lime is stored in a storage bin above the lime preparation area. The storage bin is sized to hold enough hydrated lime to maintain several days of system operation at the maximum combustion rate of the incinerator. Lime is discharged through the conical storage bin bottom. The flow of the material from the bin is aided by a vibrating—live bottom,‖ or bin activator. A variable speed screw feeder is used to meter the hydrated lime in the proportions required for batch mixing lime slurry. The lime is mixed with water in a tank beneath the lime storage bin. The screw feeder speed and the rate that water is added to the lime slurry tank are variable so that the desired lime solids concentration can be achieved in the tank. The variable feed adjustments allow water and lime to be added to the lime slurry tank at a rate that will allow a batch mode of mixing. An agitator is provided in the slurry tank to mix the water and lime and to maintain the suspension of lime solids. The mixed lime slurry is pumped at a continuous rate of flow through a recirculation loop to the SDA nozzles at a rate of up to 10 gpm to each nozzle.

2.5.1.3 Spray Dry Absorber

Unit 4 is equipped with two Spray Dryer Absorbers (SDA) located immediately downstream of the Tempering Chamber. Each SDA unit is fabricated of 3/8 inch carbon steel. The function of the SDAs is to:

- Further cool the combustion gases from 600 – 800 °F to 300 – 500 °F;
- Neutralize and remove HCl and other acids from the combustion gases; and
- Remove a portion of the particulate (fly ash) from these gases.

Slurry flow to each spray dryer absorber (SDA) is metered by a flow control valve to obtain the proper feed concentration to the spray dryer absorber. Manual adjustment to the flow is made as a function of the SDA outlet temperature and as a function of the output from a hydrochloric acid (HCl) analyzer in the gas duct downstream of the fabric filter. Since the Tempering Chamber accomplishes initial cooling of the gases, no additional water is used in the SDAs for gas temperature control.

The combined units are sized to remove more than 820 lbs/hr of chlorine from the combustion gases. Each SDA is approximately 72‘ high by 10‘7‖ in diameter. Each unit includes a head section, and a 60° conical hopper. Each SDA chamber has one access door in the upper section. Each hopper has one access door, a flanged clean-out port, and a drain connection. The SDA head section consists of a flanged inlet connection and a hot gas inlet plenum. The dual-fluid atomizing nozzles include stainless steel housings and stellited inserts. The nozzles are assembled to permit field removal from the piping. The two lime slurry piping headers have automatic isolation valves.

Combustion gases enter the top of each of these units, flow downward through a central duct and are dispersed symmetrically from this duct into the absorber chamber at a velocity and direction that assures optimal contact with the cloud of atomized lime slurry droplets introduced into the chamber by dual-fluid (lime slurry and air) nozzles. The gases then flow downward through each absorber chamber and exit through a bottom side duct. As the gases contact and pass through the cloud of atomized lime slurry, the water in the slurry evaporates, cooling the gases. Simultaneously, the lime in the slurry reacts with the hydrogen chloride in the gases to produce calcium salts. Some of the resulting dry material, consisting of calcium salts, fly ash and excess lime, falls to the conical bottom of each unit. The dry material from each unit is discharged to a conveyor system which transports it to a dump trailer or equivalent type system.

2.5.1.4 Fabric Filter

Gas exhausted from the spray dryer absorbers is distributed to two fabric filter modules connected in parallel. Each module is divided into three compartments connected in parallel, which contain multiple fabric filter bags through which the combustion gases pass to remove particulates. Within each compartment, the gas is passed through Teflon-coated fiberglass cloth bags. The gas passes from the outside to the inside of the filter bags. Particulate entrained in the gas stream is mechanically deposited on the outside of the filter bags as the gas passes through the cloth.

Each compartment has a clean air plenum and housing section to contain approximately 308 bags. Each bag is approximately 5|| in diameter by 5‘ long. The baghouses are fabricated from 3/16|| mild steel plate, of welded construction, gas tight and stiffened to withstand the maximum operating negative pressure. Each compartment has a tube sheet that supports the bags and provides for top bag/cage removal. Access to the clean air plenum is via a bolted access door. Each trailer mounted unit contains the compressed air headers, gas inlet and outlet manifolds, and the conveyor.

The fabric filter cleaning mechanism utilizes jets of air to clean the filter bags. Periodically, the cleaning sequence will be initiated. The sequence is started when the differential pressure across the filter reaches a predetermined setpoint of approximately 8.0|| w.c. or when the operator initiates a cycle. The controller then sequences to each row of filter bags in each module, releasing a burst of air opposite to the direction of gas flow. The quickly released burst of air dislodges dust cake on the exterior of each bag as it travels from the top to the bottom of the bags. Released from the bag, the dust cake falls by gravity into the hopper at the bottom of the module. From there it is discharged to a conveyor system which transports it to a dump trailer, or equivalent type system.

Treated by the spray dryer absorbers and filtered by the fabric filters, the cleaned flue gas exits the fabric filter compartments to an outlet manifold for exhaust.

2.5.1.5 Carbon Injection

The carbon injection system will air inject activated carbon into the plenum immediately upstream of the baghouses and allow for a more efficient means of controlling dioxin/furan and mercury emissions. This system will be controlled by an existing PLC which will control the input of activated carbon to the baghouse inlet plenum. Two to 20 pounds per hour of powdered activated carbon will be air injected into this plenum and allow for direct contact with the stack gases exiting the SDA's. Figure 2-3 is the specification sheet for the carbon that Veolia uses. If Veolia does change suppliers or type of carbon in the future, it would meet the specifications in Figure 2-3.

The amount of carbon is dosed in a dust-free manner into a low pressure air stream via pneumatic eduction. The eductor uses a blower for the motive air. High and low air pressure switches ensure that the blower is operating correctly and that the carbon delivery system is clear from obstruction. The minimum high pressure setting is 4 psig and the maximum low pressure setting is 1 inch water column. The carbon/air stream will then travel through piping to the injection nozzle into the ductwork. The carbon will contact the gas stream exiting the SDA's and allow for the adsorption of any dioxin/furans and mercury that might be present in this stream. Adsorption will continue as the stack gases proceed through the baghouses. The clean stack gas will exit the final stack via the induced draft fan and the captured solids will be discharged from the baghouses via the screw conveying system into an enclosed dump trailer for disposal at a Subtitle C landfill.

2.5.1.6 Induced Draft Fan and Stack

The induced draft fan and stack are located downstream of the fabric filter. Combustion gases are drawn through the system by a 400 hp induced draft (ID) fan, rated at 53,000 acfm at 400 ^{o}F saturated, and 25|| water column pressure. The induced draft fan provides the mechanism for transporting the incinerator flue gas through the spray dryer absorber, fabric filter, and all interconnecting ducts. The ID fan includes an inlet volume control damper to be used to control the velocity of the gas within the ducting and treatment devices.

Treated gases are exhausted from the induced draft fan to the atmosphere through a 100-ft. high stack. The stack diameter for Unit 4 is 48 inches I.D. The stack is equipped with instrument sampling ports and a sampling platform for emissions testing. Figure 5-1 in the QAPjP provides details on the design and sample port locations and configurations for the stack.

Figure 2-3. Carbon Specifications

Norit Activated Carbon

leading in purification

ISO 9001:2000
FM 36335

DATASHEET

No. 1100
May 2009

DARCO® FGD

POWDERED ACTIVATED CARBON

DARCO FGD is a steam activated carbon manufactured specifically for the removal of heavy metals and other contaminants typically found in incinerator flue gas emission streams. It has been proven in numerous full scale operating facilities to be highly effective for the removal of gaseous mercury, dioxins (PCDD) and furans (PCDF). Its open pore structure and fine particle size permit rapid adsorption, which is critical for high performance in flue gas streams where contact times are short.

DARCO FGD is a free flowing powdered carbon with minimal caking tendencies, which makes it ideal for automatic dosing systems with dry or wet injection directly into the flue gas stream. It is manufactured with a high ignition temperature to permit safe operation at the elevated temperatures inherent in incinerator flue gas streams.

Product Specifications

Bromophenol Blue Number	85 min.
Moisture, % as packed	8 max.
Mesh size (U.S. Sieve Series)	
Less than 325 mesh (45 µm), %	95 min.

Typical Properties*

Iodine number, mg/g	570
Total sulfur, %	1.1
Bulk density, tamped, g/mL	0.51
lb/ft^3	32
Surface area, m^2/g	600
Ignition temperature, °C	400

*For general information only, not to be used as purchase specifications.

Packaging/Transportation

Standard package is 900 lb woven polypropylene bulk bags with a glued plastic liner. Alternate package includes pneumatic bulk trailer.
Activated carbon (NOT REGULATED)
Exempt from DOT, IATA, and IMDG regulations
Import/Export classification: 3802.10.0000 (HS Tariff Classification)
Domestic Freight Classification: NMFC 040560
CAS # 7440-44-0

Material Handling

Wet activated carbon depletes oxygen from air and, therefore, dangerously low levels of oxygen may be encountered. Whenever workers enter a vessel containing activated carbon, the vessel's oxygen content should be determined and work procedures for potentially low oxygen areas should be followed. Appropriate protective equipment should be worn. Avoid inhalation of excessive carbon dust. No problems are known to be associated in handling this material. This product contains silica. Please see the product Material Safety Data Sheet for details. Long-term inhalation of high dust concentrations can lead to respiratory impairment. Use forced ventilation or a dust mask when necessary for protection against airborne dust exposure (see Code of Federal Regulations - Title 29, Subpart Z, par. 1910.1000, Table Z-3).

Note: Any specification given was valid at time of issuance of the publication. However, we maintain a policy of continuous development and reserve the right to amend any specification without notice.

Norit Americas Inc. • 3200 West University Avenue • PO Box 790 • Marshall, TX 75671 USA
Telephone +1 903 923 1000 • +1 800 641 9245 • FAX +1 903 923 1003
www.norit-americas.com • info@norit-americas.com

2.6 Stack Emissions Monitoring [40 CFR §63.1207(f)(1)(iii)(H)]

The continuous emissions monitoring (CEM) system consists of sample probes, sample delivery and conditioning apparatus, and gas analyzers. Samples are extracted from the sampling ports on the stack. A CEM performance test and quality assurance program has been implemented in accordance with the **Appendix to Subpart EEE of Part 63—Quality Assurance Procedures for Continuous Emissions Monitors Used for Hazardous Waste Combustors.**

Responses from each CEMS are fed to the Control System (CS) where the CO hourly rolling average is calculated and interlocked to the waste feed cutoff valves as part of the Automatic Waste Feed Cutoff System (AWFCO) discussed in Section 2.8, below. The following provides a brief description of the CEMS instruments including the operating range and measurement principal.

2.6.1 CEM System Description

The Continuous Emissions Monitoring Systems (CEMS) on Unit 4 analyzes for opacity, carbon monoxide, hydrogen chloride, total hydrocarbons, and oxygen. These monitors, except opacity, are extractive devices mounted in sampling ports on the stack. Table 2-2 summarizes the analyzer specifications.

Table 2-2. Unit 4 Continuous Emission Monitors [1]

Parameter	Current Mfg.	Range	Principle
Oxygen	COSA	0-25%	Electrochemical
Carbon Monoxide	Ecochem MC3	0-200 ppmv 0-3000 ppmv	Infrared
Total Hydrocarbons	Thermoelectron	0-100 ppmv	FID
Hydrogen Chloride	Ecochem MC3	0-1,000 ppmv	Infrared
Opacity	Teledyne	0-100%	White light
Stack Gas Flow	PSE/Rosemount	0-55,000 acfm	Pressure drop

[1] Only the carbon monoxide,oxygen, and stack gas flowrate are parameters, and monitors, regulated and required by the HWC MACT. The other CEMS are required by the RCRA permit for the facility

The opacity monitor continuously measures the stack gas opacity and reports the measurements to an indicator and a recorder. An opacity that exceeds a preset limit triggers an alarm and interlock.

Carbon monoxide and hydrogen chloride are monitored with extractive non-dispersive infrared analyzers. Total hydrocarbons is monitored with an extractive flame ionization detector analyzer. Oxygen is monitored with a zirconium oxide cell.

Stack gas flowrate is continuously monitored as actual cubic feet per minute (acfm) using an Annubar™.

Only the carbon monoxide, oxygen, and stack gasflowrate are parameters, and monitors, regulated and required by the HWC MACTThe other CEMS are required by the RCRA permit for the facility. Thecarbon monoxide and oxygenCEMS have been certified according to the requirements of 40 CFR Part 60, Appendix B, Performance Specification 4B. A Relative Accuracy Test Audit(RATA) of the CO and O_2 CEMS is conducted annually.In addition, a RATA of theCO and O_2 CEMS will be conducted within 60 days of the Comprehensive PerformanceTest to coincide with the performance test as required by Section 5 of the **Appendix to Subpart EEE of Part 63.**

2.7 Process Monitoring and Control

The facility is equipped with a state-of-the-art monitoring and control system, which facilitates compliance with permit conditions, and otherwise, collects process control information, facilitates efficient operation and detects and prevents damage to the facility. The system consists of three major components:

- A human-machine interface (HMI) system;
- Programmable logic controller's (PLCs); and
- A high speed Ethernet cable connects all control system components.

The desired control functions are implemented through the HMI system. All digital control and emergency interlocks are accomplished by the PLC.

The control system is capable of monitoring the "operational envelope" of the incinerator and is capable of performing a number of activities including:

- Control room indication of processor sensors located within the incinerator system (such as pressure indication of the field installed pressure transmitter);
- Process controller for single instrument loops or an individual sub-system, such as a temperature control loop involving a sensor reading from one temperature transmitter affecting the function of one temperature control valve; and
- Alarm for an exceedance of a designated setpoint, such as a high pressure or low temperature.

The process control computer will continuously control and monitor the operation of the incinerator. When out-of-range conditions exist, it will notify the operator of those conditions. The process control computer is programmed to shut-down equipment (i.e., bring the system into a safe mode) when designated parameters are exceeded, which is a protective mechanism against potential equipment damage, operation outside of permit limits, or conditions that might lead to a release to the environment.

Continuous monitoring of the incinerator and scrubber system is an important aspect of the system design. A digital readout of all monitoring instrumentation is displayed on the main control screen. An audible and visual alarm alerts the incinerator operator to significant deviations from normal operating conditions. This system allows an immediate response to adverse conditions by the operator. Automatic waste feed cut-off and incineration shutdown mechanisms are also interlocked with the monitoring system at or prior to reaching permit limit levels. Monitoring methods and calibration frequencies required by the HWC MACT are listed in Table 2-3.

The incinerator has an independent process control computer that interfaces to the Quantum programmable controllers. The process computer is capable of controlling the incinerator in case of a failure in a HMI server. This computer runs a RSVIEW HMI control software that provides operator interface to all instrumentation and controls.

Table 2-3. Current HWC MACT AWFCO Parameters for Unit 4

System	Device	Units
Total Pumpable Waste Feedrate to Primary Combustion Chamber[1]	Mass flow meter/scales	lb/hr
Total Pumpable Waste Feedrate to Secondary Combustion Chamber[1]	Mass flow meter/scales	lb/hr
Total Waste Feedrate to Primary Combustion Chamber[1]	Mass flow meter/scales	lb/hr
Total Waste Feedrate to Secondary Combustion Chamber[1]	Mass flow meter/scales	lb/hr
Total LVM Feedrate [1]	Mass flow meter/scales	lb/hr
Pumpable LVM Feedrate [1]	Mass flow meter/scales	lb/hr
SVM Feedrate [1]	Mass flow meter/scales	lb/hr
Mercury Feedrate [1]	Mass flow meter/scales	lb/hr
Chlorine Feedrate [1]	Mass flow meter/scales	lb/hr
Ash Feedrate [1]	Mass flow meter/scales	lb/hr
Primary Combustion Chamber Temperature	Pyrometer	°F
Secondary Combustion Chamber Temperature	Type K Thermocouple	°F
Primary Combustion Chamber Pressure	Pressure transmitter	in. w.c.
Secondary Combustion Chamber Pressure	Pressure transmitter	in. w.c.
Sorbent Feedrate	Flow Meter	lb/lb Cl_2
Carrier Fluid Flowrate	Flow Meter	gal/lb Cl_2
Baghouse Inlet Temperature (i.e., Spray Dryer Adsorber Outlet Temperature)	Type K Thermocouple	°F
Carbon InjectionFeedrate	Screw Feeder	lb/hr
Stack Gas Flowrate	Annubar	acfm
Stack Carbon Monoxide Corrected to 7% Oxygen	Infrared	ppmv

[1] Feedrate is tabulated within the DAS using measured individual stream feedrates. Total pumpable hazardous waste and total hazardous waste feedrates are summations of the applicable individual waste feedrates. Total LVM, pumpable LVM, SVM, mercury, chlorine, and ash feedrates are calculated based on the stream feedrates and analytical results of the applicable waste streams.

[2] HRA – Hourly Rolling Average

[3] 12-HRA – 12-Hour Rolling Average

2.8 Automatic Waste Feed Cut-off System [40 CFR §63.1207(f)(1)(iii)(F)]

The incinerator has an Automatic Waste Feed Cut-Off (AWFCO) System that will shut waste feeds off in the event certain operating parameters deviate from allowable set points. The PLC continuously monitors operating parameters, making adjustments to the process as needed for proper control. Alarm logic is incorporated into the PLC system to automatically initiate an AWFCO. Table 2-3 summarizes the current HWC MACT AWFCO set points. AWFCO limits have been established based on several factors that are summarized below:

- Regulatory Limits – Established to comply with current limits in the NOC An example of this type of limit is the low temperature limit, below which waste cannot be fed until the proper limit is established.

  In addition, the HWC MACT regulations require that the AWFCO system be interlocked with the span of each process instrument that is part of the Continuous Monitoring System (CMS). A listing of these CMS instruments and their interlocked span setpoints is maintained as part of Veolia's Operating Record.
- Process Safety Limits – Established to assure process equipment is protected and unsafe operating conditions do not occur. An example of this is inadequate excess air in the combustion chamber that can lead to fuel rich conditions.
- Utility or Power Failure – Established to facilitate a controlled shutdown of the process during loss of process air, steam, water or electricityAn example of this is the loss of instrument air that is necessary for certain types of process instruments to function properly. Wastes will not be reintroduced into theincinerator until proper operation of key instruments is reestablished

In addition to the AWFCO system, operators can manually shutdown waste feeds or the entire process should this be needed.

2.8.1 AWFCO System Testing

§63.1206(c)(3)(vii) states—TheAWFCO system and associated alarms must be tested at least weekly to verify operability, unless you document in the operating record that weekly inspections will unduly restrict or upset operations and that less frequent inspections will be adequate. At a minimum, you must conduct operability testing at least monthly.‖Veolia tests the AWFCO systems bi-weekly, as weekly testing would unduly restrict and upset operations.

Waste feeds are ceased when AWFCO operability testing is performed and restarted upon completion of the testing. By ceasing and restarting waste feeds, increased emissions, such as elevated CO concentrations in the stack gas, can occur due to the unsteady state of the operation during these periods Besides incurring downtime, during these testing periods, increased costs are experienced due to much higher natural gas consumption during this idling period to maintain the hourly average combustion zone temperature. By performing the AWFCO testing on a bi-weekly basis, decreased emissions can be achieved and a reduction in fossil fuel usage realized.

The current testing program has been in place under the RCRA permit for over 20 years and has proven to be adequate in detecting problems. This rationale is included in the facility's AWFCO Plan. In some cases this testing occurs more frequently depending on how often actual AWFCOs occur at the unit. When these AWFCOs occur, verification of the system operability is confirmed by the actuation of closed limited switches on the waste feed shutoff valves. Per the required frequency, incinerator personnel check the functionality of AWFCO logic that is part of the incinerator's PLC system to make sure that should process conditions deviate from allowable limits, the computer logic will initiate waste feed shutdowns as required.

This is accomplished by manually simulating process conditions that are outside allowable limits and observing and documenting when the control or block valve software logic on the waste feed line begins to initiate valve closure. Should actual AWFCOs occur during a given testing period, these are documented by operating personnel to satisfy regulatory requirements for system testing. Results of this testing are documented on a separate AWFCO Testing Log and maintained as part of the unit's Operating Record.

2.9 Air Pollution Control Equipment Maintenance Practices [40 CFR §63.1207(f)(1)(iii)(G)]

2.9.1 Program Overview

Veolia utilizes an extensive preventative maintenance (PM) program to keep equipment operational and prevent breakdowns and failures. Based upon the type of equipment and historical operations and maintenance experience, schedules for various inspection and PM activities are followed. This includes aspects such as documenting detailed maintenance histories on equipment, routine inspection and lubrication programs for high wear equipment and non-destructive testing of piping and vessels using techniques like ultrasound to assess integrity. The frequency of these activities varies depending upon the equipment, PM activity and the incinerator's shutdown schedule.

For example, frequent (i.e., weekly) instrument and certain mechanical equipment checks are made for critical process items. Lubrication, vibration analysis and other mechanical integrity checks are done at longer frequencies like monthly or quarterly. Such items as inspecting refractory brick for wear are typically performed when the entire incinerator is shut down for maintenance.

2.9.2 Test Program Preparation Activities

In accordance with the Continuous Monitoring System Performance Evaluation Test Plan (CMS PETP) in Appendix A, prior to testing, instrumentation associated with key parameters of the test will be checked, calibrated, or replaced, as appropriate, to ensure proper operation of the instrumentation during testing (i.e., waste feed flow meters and scales, CEM's, pressure transmitters, thermocouples, stack flow meters, etc.).

3.0 Incinerator Feed Stream Descriptions

3.1 General

Veolia treats a broad range of wastes and thus the individual streams that may make up the incinerator overall feed at any given time can vary greatly, depending on generator production and shipping schedules. Prior to scheduling wastes for shipment to the facility, the waste streams are characterized by the generator and reviewed by Veolia staff. A Waste Profile Number uniquely identifies each different waste stream. This assures that only pre-approved wastes are handled at the facility and that all necessary regulatory, handling, safety and other important information are available to Operations personnel. Organic Hazardous Air Pollutants (HAPs) measured or expected (based on process knowledge) to be present in a source waste at or above approximately 0.1 % by weight are listed in the tables in this section. Organic HAPS not listed are, based on process knowledge, believed to be either completely absent or present in the waste at less than 0.1 % by weight.

In addition to the information below that summarizes the top volume waste streams processed at Veolia, Table 3-1 provides a summary of the major HAPs processed at the facility. Veolia will provide EPA with waste profiles and chemical compositions of the anticipated wastes to be burned during the CPTs about one month prior to testing. Veolia will provide EPA with analytical results performed on any liquid or solid waste stream to be used during the CPT by August 16, 2013. Note that waste streams may be added or removed from this packet by test time. Veolia will notify EPA of any changes made to wastes to be burned during the CPT prior to the test. Veolia will provide those new profiles to EPA prior to the test. The test report will include the waste profiles fed during the testing with the analytical results for the samples obtained during tests for heating value, ash, SVM, LVM, mercury, and total chlorine.

Table 3-1. Summary of Major HAPs Processed

HAP	CAS Number	Annual Pounds Received
Toluene	108-88-3	1,413,638
Styrene	100-42-5	816,986
Methanol	67-56-1	779,318
Acetonitrile	75-05-8	766,568
o-Xylene	95-47-6	506,286
Ethylbenzene	100-41-4	438,753
Atrazine	1912-24-9	356,148
Methyl Isobutyl Ketone	108-10-1	347,681
Triethylamine	121-44-8	212,270
Pyridine	110-86-1	115,835

3.2 High Volume Wastes

3.2.1 Liquid Wastes

Liquid wastes are received at the Sauget facility in tank trucks and drums and are either direct fed through a dedicated line or are blended with other compatible waste streams into the tank farm. Table 3-2 provides a summary of the top volume liquid streams that have been processed in the last year. Liquid wastes can be processed in any one of the three incinerators. These streams can be organic, aqueous or a mixture.

3.2.2 Bulk Solids

Table 3-3 provides a summary of the top bulk solid streams handled at the Sauget facility in the last year. Bulk solids can include streams like contaminated soils, wastewater sludges or manufacturing process solids. These wastes are received at the site primarily in 20 to 40 cubic yard roll-off containers or other similar bulk transport vehicles.

3.2.3 Containerized Waste

Table 3-4 provides a summary of the top containerized waste streams handled at Sauget in the last year. Containerized wastes are received in drums and smaller cartons, boxes or pails and can include materials such as laboratory waste, spent carbon, process residues.

3.2.4 Gaseous Wastes

Small volumes of compressed gases are processed in Unit 4 however these are minimal in comparison to the other waste types that are treated.

3.3 Auxiliary Fuels

Natural gas is used as auxiliary fuel to start-up and obtain desired temperatures in the incinerators. At this time, all incinerators use natural gas as their primary fossil fuel. Typical composition of the natural gas is provided in Table 3-5.

Table 3-2. Top Volume Liquid Waste Streams

Profile	Waste Name	Annual Pounds Received
397628	DE175 - IPA Wash & Filtrate Wash	4,649,673
388522	Mother Liquor Residue	2,246,160
076148	Formulation Aqueous With or Without Sevin	2,096,319
388955	1.51B Waste Organics/MKH Sencor FOE/GAU	1,723,519
388521	Upper Phase (May have cyanide)	1,530,146
697847	1.5B3/B4 Aqueous Waste (Sencor/FOE)	1,405,346
351071	Bulked Liquid for Incin (CWDTWILIQ)	1,345,870
131663	MDU-SIB Recycle Oil	1,299,755
857617	Amine and Water Mixture	1,216,946
097250	Tank Rinsate Aqueous Non-Haz	915,950

Table 3-3. Top Bulk Solid Waste Streams

Profile	Waste Name	Annual Pounds Received
156453	Unused Medication	151,439
393836	Hazardous Contaminated Soil	80,768
410031	Bulked Liq for Incin (CWDTWILIQ)	43,099
175684	Soil Contaminated with Xylene	38,318
251059	Metal Equipment for Cleanout	29,322
360856	Sludge -AG Chemical Hazardous	24,740
208526	Bromoxynil Octanoate; Atrazine	19,992
272684	Exchanger Pad Debris	13,328
076872	Demilitarized BDU-PPE	13,328
197763	Serfene 121 Solids	12,495

Table 3-4. Top Containerized Solid Waste Streams

Profile	Waste Name	Annual Pounds Received
SOL003	Solid Neutral BTU > 5000, Halogen <25%	1,285,211
LOP001	Flammable Loose Pack	821,421
597419	Toxic Solids	724,418
076154	Lab Waste (COM)	679,895
BB1445	PLC-Direct Charge	658,253
LOP003	Non Reg Material - Loose Pack	534,886
387332	Residues (Plastic Bags PPEET)	479,225
502988	Centrum Vitamin Tablet Production Waste	372,184
534022	Centrum Multi-Vitamin	357,357
LIQ003	Liquid BTU 5000-10000 Halogen, 10%	346,820

Table 3-5. Typical Properties for Natural Gas

Component	Units	Value	Component	Units	Value
Methane	mole %	94.428	Heptanes	mole %	0.019
Ethane	mole %	3.081	Octanes	mole %	0.005
Propane	mole %	0.582	Nitrogen	mole %	0.703
Isobutane	mole %	0.087	Carbon Dioxide	mole %	0.824
N-butane	mole %	0.129	Helium	mole %	0.014
Isopentane	mole %	0.040	Hydrogen	mole %	0.023
N-pentane	mole %	0.032	Argon	mole %	0.0
Hexanes	mole %	0.029	Oxygen	mole %	0.004
Parameter	**Units**	**Value**	**Parameter**	**Units**	**Value**
Heat Content, gross, dry	Btu/CF	1040.5	Relative Density	-	0.592
Heat Content, gross, sat.	Btu/CF	1023.6	Wobbe Index	-	1330

4.0 Performance Test Protocol

4.1 General Description

This CPT Plan has been designed to demonstrate compliance with all of the applicable standards of the HWC MACTand to establish OPLs while demonstrating compliance with applicable, and targeted, HWC MACT emissions standards.

During the testing, Veolia will be seeking to establish new Operating Parameter Limits (OPLs) for Unit 4. Due to this, Veolia will adjust the limits at which the AWFCO system activates, except for carbon monoxide. At the end of each day of testing, current AWFCO limits will be reinstated back to currently established limits.

4.2 Performance Standards

This test plan for Unit 4 at Saugethas been designed to demonstrate compliance with the performance standards of the HWC MACT forall of the applicable emission standards including

- Carbon Monoxide: 100 ppmv, dry, corrected to 7% O_2;
- Total Hydrocarbons: 10 ppmv, dry, corrected to 7% O_2;
- Dioxins/Furans: 0.40 ng TEQ/dscm, corrected to 7% O_2;
- Particulate Matter (PM): 0.013 grains/dscf, corrected to 7% O_2;
- Mercury: 130 μg/dscm, corrected to 7% O_2;
- Semivolatile Metals (SVM) (Cd and Pb combined): 230 μg /dscm, corrected to 7% O_2;
- Low Volatility Metals (LVM) (As, Be and Cr combined): 92 μg /dscm, corrected to 7% O_2; and
- Hydrogen Chloride/Chlorine (HCl/Cl_2): 32 ppmv as Cl^- equivalent, dry, corrected to 7% O_2.

A performance evaluation test of the Continuous Monitoring System (CMS) will be performed in association with the CPT (see Appendix A). And a Relative Accuracy Test Audit (RATA) for the CO and O_2 Continuous Emissions Monitoring Systems (CEMS) will be performed to coincide with the CPT (i.e., within 60 days of the CPT).

4.3 Test Condition [40 CFR § 63.1207(f)(1)(vi) and (vii)]

The testing is designed to demonstrate compliance with targeted HWC MACT emissions standards while establishing OPLs required in association with the targeted standard, or standards. There will be one test condition, and one set of OPLs will be established. In the first part of each test run, compliance will be demonstrated with the emission standard for PM, and the OPLs required in association with this emission standard will be developed. In the second part of each test run, compliance will be demonstrated with the emission standards for HCl/Cl_2, dioxins/furans, LVM, SVM, mercury, and THC, and the OPLs required in association with these emission standards will be developed. There will be three test runs performed at the one test condition. Section 4.11 and Table 4-5 present an anticipated daily schedule for the conduct of the subsequent CPT.

4.3.1 Maximum Feedrate of Ash

This part of the CPT is designed to demonstrate compliance with the emission limit and to establish OPLs for the Final Replacement Standard of the HWC MACT for PM.

Unit 4 will be operated at normal combustion zone temperatures with normal waste feedrates. The flue gas flowrate and the ash feedrate will be maximized. The target waste and component feedrates and operating conditions for this portion of the CPT are summarized in Table 4-1 and the proposed operating limits are summarized in Table 4-2. OPLs for the following will be established in this part of the test:

- Maximum Feedrate of Ash; and
- Maximum Stack Gas Flowrate.

Table 4-1 presents the waste feeds that are planned to be fed during the testing along with anticipated feedrates. In the event that selected waste feed materials contain an appreciable quantity of ash, the ash spiking rate may be adjusted to achieve the overall desired feedrate.

Sampling for this portion of the test includes:

- Stack – PM;
- Stack – CO, O_2; and
- Waste Feeds – Ash, Chlorine, Moisture, Heating Value, and Density and Viscosity (Liquids)

The OPLs associated with the emission standard for PM will be developed from this portion of the test using process data collected during the collection of the Method 5 sampling train.

4.3.2 Maximum Feedrate of Metals and Chlorine, Maximum Waste Feedrates, Minimum Carbon Feedrate

This part of the test is designed to demonstrate compliance with the emission limits and to establish OPLs for the Final Replacement Standards of the HWC MACT for HCl/Cl_2, LVM, SVM, mercury, dioxins/furans, and THC.

Unit 4 will be operated at maximum hazardous waste feedrates and normal combustion zone temperatures. Although Veolia will be establishing a minimum PCC temperature during this part of the test, the incinerator will be operated at normal temperatures, which will be higher than the current minimum PCC temperature OPLs, and will use the average temperature of the runs to establish the new PCC temperature OPLs. The feedrates of SVM, LVM, and Hg will be maximized, and the flue gas flowrate and chlorine feedrate will be maximized. The feedrate of carbon will be maximized, and the baghouse inlet temperature will be maximized. The feedrate of ash will be at normal (or higher) levels. The target feedrates and operating conditions for this portion of the CPT are summarized in Table 4-1 and the proposed operating limits are summarized in Table 4-2. OPLs for the following will be established in this part of the test:

- Maximum Pumpable Hazardous Waste Feedrate to the Rotary Kiln;
- Maximum Pumpable Hazardous Waste Feedrate to the SCC;
- Maximum Total Hazardous Waste Feedrate;
- Minimum Rotary Kiln Temperature;
- Minimum SCC Temperature;
- Maximum Stack Gas Flowrate;
- Maximum Feedrate of Pumpable LVM;
- Maximum Feedrate of Total LVM;
- Maximum Feedrate of SVM;

- Maximum Feedrate of Mercury;
- Maximum Feedrate of Chlorine;
- Minimum Sorbent Flowrate to the SDA;
- Minimum Carrier Fluid Flowrate to the SDA;
- Minimum Carbon Feedrate;
- Maximum Baghouse Inlet Temperature

Table 4-1 presents the waste feeds and spiked feed materials that are planned to be fed during the testing along with anticipated feedrates for each. In the event that selected waste feed materials contain an appreciable quantity of chlorine, LVM, SVM, or mercury, the metals or chlorine spiking rates may be adjusted to achieve the overall desired feedrate.

Sampling for this portion of the test includes:

- Stack – Dioxins/Furans
- Stack – LVM, SVM, and Hg
- Stack – CO, O_2
- Stack – THC
- Stack – HCl/Cl_2
- Cr, Pb, Hg, and Chlorine Spiking Materials
- Waste Feeds – Metals (LVM – As, Be, Cr; SVM – Pb, Cd; Hg), Ash, Chlorine, Moisture, Heating Value, and Density and Viscosity (Liquids)

Operation of Unit 4 will remain consistent throughout the collection of the Modified Method 26A (proposed and approved by EPA Region 5), Method 29 and Method 0023A sampling trains. The OPLs associated with the emission standards for HCl/Cl_2, LVM, SVM, Hg, dioxins/furans, and THC will be developed using process data gathered during the collection of the respective Modified Method 26A, Method 29 and Method 0023A sampling trains. The second part of the test is expected to be completed with the completion of sampling of the Method 0023A sampling train. The Method 0023A sampling train is the longer running sampling train, and should be the last one completed.

Table 4-1. Target Feedrates and Operating Conditions

Parameter	Units		Expected Feedrate or Operating Condition to be Demonstrated During the CPT
Pumpable Waste Feed to the Primary Combustion Chamber	lb/hr		3,000 - 4,000
Pumpable Waste Feed to the Secondary Combustion Chamber	lb/hr		800 – 1,500
Solids Waste Feed	lb/hr		7,500 – 10,000
Total Waste Feed to the Primary Combustion Chamber	lb/hr		12,000 – 15,000
Total Waste Feed to the Secondary Combustion Chamber	lb/hr		800 1,500
Stack Gas Flowrate	acfm		35,000 – 40,000
Temperature in the Primary Combustion Chamber	°F		1,500 – 1,700
Temperature in the Secondary Combustion Chamber	°F		1,800 – 1,900
Lead Spike[1]	lb/hr		60 - 65
SemiVolatile Metals Feedrate	lb/hr		60 -65
Chromium Spike[1]	lb/hr		40 - 45
Pumpable Low Volatility Metals Feedrate	lb/hr		40 - 45
Total Low Volatility Metals Feedrate	lb/hr		40 - 45
Mercury Spike[1]	lb/hr		0.02 – 0.06
Mercury Feedrate	lb/hr		0.02 – 0.06
Chlorine Spike[1]	lb/hr		200 - 250
Chlorine Feedrate	lb/hr		200 - 250
Ash Feedrate	lb/hr		5,500 – 6,500
Fabric Filter Inlet Temperature	°F		390 - 425
Carbon InjectionFeedrate	lb/hr		6 - 8
Sorbent Feedrate	lb/lb Cl_2		2.0 – 2.5
Carrier Fluid Flowrate	gal/lb Cl_2		3.0 – 3.5

[1] Rates may be modified based on concentrations in the native waste fed during the CPT.

Table 4-2. HWC MACT OPLS to be Established During the Comprehensive Performance Test

Process Parameter	Units	Averaging Period	How Limit Established	Expected Limit
Maximum Pumpable Waste Feed to the Primary Combustion Chamber [1]	lb/hr	1-hr	Average of maximum HRAs for each run	3,000 – 4,000
Maximum Pumpable Waste Feed to the Secondary Combustion Chamber [1]	lb/hr	1-hr	Average of maximum HRAs for each run	800 – 1,500
Maximum Total Waste Feed to the Primary Combustion Chamber [1]	lb/hr	1-hr	Average of maximum HRAs for each run	12,000 – 15,000
Maximum Total Waste Feed to the Secondary Combustion Chamber [1]	lb/hr	1-hr	Average of maximum HRAs for each run	800 -1,500
Maximum Flue Gas Flowrate [1]	acfm	1-hr	Average of maximum HRAs for each run	35,000 – 40,000
Minimum Temperature in the Primary Combustion Chamber [1]	°F	1-hr	Average of the test run averages	1,500 – 1,700
Minimum Temperature in the Secondary Combustion Chamber [1]	°F	1-hr	Average of the test run averages	1,800 – 1,900
Maximum Total Low Volatility Metals (LVM) Feedrate	lb/hr	12-hr	Average of the average HRAs for each run	40 – 45
Maximum Pumpable LVM Feedrate	lb/hr	12-hr	Average of the average HRAs for each run	40 – 45
Maximum Semivolatile Metals (SVM) Feedrate	lb/hr	12-hr	Average of the average HRAs for each run	60 – 65
Maximum Total Mercury Feedrate	lb/hr	12-hr	Average of the test run averages	0.02 – 0.06
Maximum Chlorine/Chloride Feedrate [2]	lb/hr	12-hr	Average of the test run averages	200 – 250
Maximum Ash Feedrate	lb/hr	12-hr	Average of the average HRAs for each run	5,500 – 6,500
Maximum Fabric Filter Inlet Temperature	°F	1-hr	Average of the test run averages	390 – 435
Minimum Carbon Feedrate	lb/hr	1-hr	Average of the test run averages	6 – 8
Minimum Sorbent Feedrate	lb/lb Cl_2	1-hr	Average of the test run averages	2.0 – 2.5
Minimum Carrier Fluid Flowrate	gal/lb Cl_2	1-hr	Average of the test run averages	3.0 – 3.5

[1] Per 40 CFR 63.1209(i), the most stringent limit derived from independent performance tests (i.e., Data in lieu from the January 1993 RCRA Trial Burn and the subsequent CPT applies.

[2] Per 40 CFR 63.1209(i), the most stringent limit derived from independent performance tests (i.e., the two portions of the subsequent CPT) applies.

4.4 Establishing Operating Parameter Limits

An objective of the subsequent CPT for the Final Replacement Standards is to establish limits for a number of operating parameters while simultaneously demonstrating compliance with the performance standards and emission limits of the HWC MACT. Operating parameter limits established as required by the HWC MACT from the results of the CPT will limit emissions of the regulated parameters, and will ensure compliance with these standards during future operations. Table 4-3 identifies each emission standard and the operating parameter to be monitored to ensure future compliance. The HWC MACT requires operating parameters be established. The operating limit is set as the average of the three runs during the applicable portion of the CPT and the 1995 RCRA Trial Burn, as appropriate per manufacturer specification, or by rule.

Table 4-3. Emission Standards versus Operating Parameters

Emission Standard	Operating Parameter
Carbon Monoxide	Stack CO CEMS concentration
Dioxins/Furans	PCC temperature SCC temperature Flue gas flowrate Total waste feedrate Pumpable waste feedrate Baghouse inlet temperature Carbon feedrate
DRE	PCC temperature SCC temperature Flue gas flowrate Total waste feedrate Pumpable waste feedrate
Total Hydrocarbons (THC)	PCC temperature SCC temperature Flue gas flowrate Total waste feedrate Pumpable waste feedrate
Mercury	Mercury feedrate Carbon feedrate
Particulate Matter	Flue gas flowrate Ash feedrate
Semivolatile Metals Low Volatility Metals	Flue gas flowrate SVM feedrate LVM feedrate (total and pumpable) Total chlorine and chloride feedrate Baghouse inlet temperature
HCl/Cl_2	Flue gas flowrate Total chlorine and chloride feedrate Sorbent feedrate Carrier fluid flowrate

The following operating conditions will be established for the HWC MACT:

Limits on the Combustion Units

The **carbon monoxide (CO) concentration** is established by rule. The HRA limit is 100 ppmv, dry basis, corrected to 7% oxygen, and will be demonstrated during all testing performed.

The **total hydrocarbon (THC) concentration** is established by rule. The limit for THC of 10 ppmv, dry basis, corrected to 7% oxygen will be demonstrated during the dioxins/furans portion of the CPT.

Minimum **combustion chamber temperatures** in the kiln (i.e., the primary combustion chamber) and in the secondary combustion chamber (SCC) will be established during the CPT. The hourly rolling average (HRA) limits are the average of the test run averages from the dioxins/furans tests or the limits set during the 1995 RCRA Trial Burn, whichever is more stringent since DRE is being demonstrated using test results from the 1995 trial burn.

Fugitive emissions are controlled by maintaining a negative pressure on the combustion system and by maintaining totally sealed combustion chambers. The pressure of both the kiln and SCC are monitored.

The maximum **flue gas flowrate**, measured as the stack gas flowrate, will be established during the CPT. Flue gas flowrate is an OPL required by standards to be demonstrated during all testing performed. The HRA limit is the average of the maximum hourly rolling averages for each run, and will be established from data from all tests conducted during the CPT or based on the 1995 RCRA Trial Burn, whichever is most stringent since DRE is being demonstrated using test results from the 1995 trial burn.

Limits on the Feedstreams

The maximum **total hazardous waste feedrates** to the incinerator (both the kiln and SCC) will be established during the dioxins/furans portion of the CPT. The HRA limit is the average of the maximum hourly rolling averages for each run or the limit set during the 1995 RCRA Trial Burn, whichever is more stringent since DRE is being demonstrated using test results from the 1995 trial burn.

The maximum **pumpable hazardous waste feedrates** to the incinerator (both the kiln and SCC) will be established during the dioxins/furans portion of the CPT. The HRA limit is the average of the maximum hourly rolling averages for each run during or the limit set during the 1995 RCRA Trial Burn, whichever is more stringent since DRE is being demonstrated using test results from the 1995 trial burn.

The maximum **feedrate of mercury** will be established during the metals portion of the CPT. The 12-hour rolling average limit is the average of the test run averages. The limit demonstrated during the CPT can be extended by extrapolating the measured total feedrate of mercury and the measured emission concentration of mercury up to 75% of the HWC MACT standard of 130 μg/dscm or three times the spiked feedrate during the testing.

The maximum **feedrate of semivolatile metals (SVM)** (Pb and Cd combined) will be established during the metals portion of the CPT. The 12-hour rolling average limit is the average of the test run averages with the demonstration of maximum feedrate of SVM along with demonstration of higher maximum flue gas flue rate and other associated operating parameter limits. Feedrates for SVM and LVM will be established concurrently. The feedrate of total chlorine/chloride will be maximized as SVM and LVM are demonstrated. A feedrate of total chlorine/chloride will be developed in conjunction with the feedrates of SVM and LVM as an OPL for SVM. The feedrate limit for SVM can be extended by extrapolating the measured total feedrate of SVM and the measured emission concentration of SVM up to 75% of the HWC MACT standard of 230 μg/dscm or 3 times the spiked feedrate during the testing.

The maximum **feedrate of low volatility metals (LVM)** (As, Be, and Cr combined) will be established during the metals portion of the CPT. Feedrate limits will be established for feedrate of LVM in all feedstreams (i.e., total in nonpumpable and pumpable streams) and for feedrate in all pumpable feedstreams. The 12-hour rolling average limits are the averages of the test run averages with the demonstration of maximum feedrate of LVM along with demonstration of higher maximum flue gas flowrate and other associated operating parameter limits. Feedrates for SVM and LVM will be established concurrently. The feedrate of total chlorine/chloride will be maximized as SVM and LVM are demonstrated. A feedrate of total chlorine/chloride will be developed in conjunction with the feedrates of SVM and LVM as an OPL for LVM. The feedrate limit for LVM can be extended by extrapolating measured total feedrate of LVM and the measured emission concentration of LVM up to 75% of the HWC MACT standard of 92 μg/dscm or 3 times the spiked feedrate during the testing.

A maximum **feedrate of total chlorine and chloride** is established during the CPT in association with the establishment of feedrate limits for SVM and LVM, and with demonstration of the emission limit for HCl/Cl_2. The 12-hour rolling average limit is the average of the test run averages during the metals portion or the HCl/Cl_2 portion of the CPT, whichever is more stringent.

A maximum **feedrate of ash** is established during the PM portion of the CPT with demonstration of the emission limit for PM. The 12-hour rolling average limit is the average of the test run averages during the PM portion of the CPT.

Limits on the Spray Dryer Absorbers and Baghouse

The HWC MACT requires that operating parameter limits be established in association with standards for identified parameters. The air pollution control system of Unit 4 includes spray dryer absorbers and a baghouse. The spray dryer absorbers are designed and operated for control of acid gases. The regulated constituents of the HWC MACT for the spray dryer absorbers are HCl/Cl_2. The baghouse is designed and operated for control of entrained solids. The regulated constituents of the HWC MACT for the baghouse are PM, SVM, LVM, and dioxins/furans. Operating parameter limits will be established for components of the air pollution control system in association with the regulated parameters.

A maximum **inlet temperature to dry particulate matter control device (i.e., the baghouse)** is required in association with the standards for SVM and LVM, and dioxins/furans, and will be established during the CPT in association with the establishment of feedrate limits for SVM and LVM, and with demonstration of the emission limit for dioxins/furans. The HRA limit is the average of the test run averages during the SVM and LVM portion or the dioxins/furans portion of the CPT, whichever is more stringent.

The minimum **carbon feedrate to the baghouse** is required in association with the standards for dioxins/furans and mercury and will be established during the HCl/Cl_2 portion of the CPT. The HRA limit is the average of the test run averages during the metals portion or the dioxins/furans portion of the CPT, whichever is more stringent.

The minimum **sorbent feedrate to the absorbers** is required in association with the standard for HCl/Cl_2, and will be established during the HCl/Cl_2 portion of the CPT. The HRA limit is the average of the test run averages.

The minimum **carrier fluid flowrate to the absorbers** is required in association with the standard for HCl/Cl_2, and will be established during the HCl/Cl_2 portion of the CPT. The HRA limit is the average of the test run averages.

4.5 Waste Feed Spiking

In order to demonstrate the required performance criteria for this program, it will be necessary to spike the incinerator feeds with select inorganic constituents. Chlorine and the metals lead, chromium and mercury will be spiked into the incinerator during the second part of each test run. The spiking levels and approach proposed for the CPT have been used successfully in the past for testing at not only Veolia, but for testing at other hazardous waste combustion facilities as well.

Each spiked material will be prepared to a known specification and confirmed by a certificate of analysis. These materials will be prepared and fed in a manner that assures a very consistent feedrate. Feedrates of each spiked compound are to be well above expected levels in native wastes such that the spiked constituent is expected to be the dominant feed of the selected parameter. Waste feeds will be sampled during the test and analyzed. The amounts of the selected parameters in the waste streams will contribute to the OPL for the waste feedrate that constituent

Spiking rates are also selected based on historical performance to assure that emissions can be detected and actual results, versus non-detect results, are used in the calculation of system removal efficiencies (SREs).

A Standard Operating Procedure (SOP) for the preparation of the spiking materials by Veolia is included in the QAPjP. Veolia will prepare the spiking materials in accordance with the referenced QAPjP for purposes of this CPT Plan.

A more detailed description of the spike preparation procedure will be made available for EPA when the spike materials are prepared. This updated document will include, among other things, the certificates of analysis for the spike material, the scale and balance certifications, mass and concentrations of spike materials, and amount of nitric acid added to the mercury spike solution. The final version of this document will be included in the test report. It will also include, among other things, the lab preparation log sheets, spike preparation log sheets, and the incineration charge sheets.

4.5.1 Inorganic Constituents

Several metals will be spiked to the system to establish OPLs for the select constituents and calculate SREs. Regulated metals may be fed at some level in the native waste materials to be used during the test. However, these native concentrations may not be high enough to achieve the desired feedrate limits to be set for the system. Therefore, during the metals portion of the CPT, Veolia plans to spike three surrogate metals at higher than normal rates to ensure that sufficient metals are fed to achieve measurable emissions in the stack emissions.

Table 4-4 provides an overall summary of information relevant to the metals emissions testing. This table shows that at conservative method detection limits for the stack sampling method that will be used to measure metals in the stack gas (i.e., EPA Method 29) and the spiking rates of these metals, a SRE can be calculated greater than SRE measured in previous test programs of Unit 4. These calculations show that the metals spiking rates will result in measurable concentrations in the stack gas and emission rates. This table is only used as a predictive tool, and OPLs will be developed using actual results of the CPT. Two other points are worth noting with regard to Table 4-4:

- The spiked amount for a given metal will be the difference between the desired feed rate limit and the native quantity expected to be fed during the test; and
- Surrogate metals will represent the whole group (in the case of LVM and SVM) and test results for the spiked of these two metals categories will be used to extrapolate to the OPL for the metal feed rate.

The three metals to be spiked are representative of the three classes of metal volatility of the HWC MACT, and therefore can be used to set limits for the HWC MACT metals not spiked.

Table 4-4. Metals Evaluation Plan

	Lead	Chromium	Mercury
Detection Limit (µg)	0.45 (0.2+0.25)[1]	0.50 (0.25+0.25)[1]	1.79 (0.14+0.87+0.085+0.47+0.22)[2]
Sample Volume Collected (dscf)	45	45	45
Stack Detection Limit (µg/m^3)	0.35	0.39	1.40
Stack Flowrate (acfm / dscfm at 12% O_2)	37,432 / 15,056	37,432 / 15,056	37,432 / 15,056
Emission Rate at Detection Limit (lb/hr)	2.0×10^{-5}	2.2×10^{-5}	7.9×10^{-5}
Target Spiking Rate (lb/hr)	60 – 65	40 – 45	0.02 – 0.06
SRE at Detection Limit (%) [3]	99.999987	99.999986	98.49776
Historical SRE (%) [4]	99.99824	99.99919	95.38
Stack Gas Concentration at Expected SRE and Mid-Range of Target Spiking Rate (µg/m^3 at 7% O_2)	30	9.5	51

[1] Detection Limit in Probe and Nozzle Rinse + Acidic Peroxide Impingers of EPA Method 29.

[2] Detection Limit in Probe and Nozzle Rinse + Acidic Peroxide Impingers + Empty Impinger + Acidic Permanganate Impinger + HCl Rinse of EPA Method 29.

[3] Based on the low end target spiking rate .

[4] This SRE is an average of the results from the August/September 2008 test programs.

4.5.2 Spiking for the LVM Category

The LVM category for incinerators includes arsenic, beryllium and chromium. Veolia plans to spike chromium at 40 - 45 lb/hr during all three metals test runs. The SRE demonstrated during the CPT for chromium will be used to establish the feedrate limits for total and pumpable LVM, using extrapolation (see Section 4.6)

Chromium will be spiked as chromic acid (unless another compound of chromium is used, based on availability, and approved by U.S. EPA Region 5) through a liquid feed injector via a pumping station that will monitor the feedrate. Waste chromic acid is treated at Veolia and thus, spiking chromic acid during the CPT is representative of normal operations.

4.5.3 Spiking for the SVM Category

The SVM category for incinerators includes cadmium and lead. Veolia plans to spike lead at 60 - 65 lb/hr during the CPT to establish a SRE for all three metals testruns. The SRE demonstrated during the CPT for lead will be used to establish a SVM feedrate limit, using extrapolation (see Section 4.6)

Lead will be spiked as lead nitrate (unless another compound of lead is used, based on availability, and approved by U.S. EPA Region 5) and fed to the incinerator in small, pre-measured plastic baggies at regular intervals along with other solid waste feeds during the performance test. Lead containing wastes that are normally treated at Veolia are predominantly bulk or containerized solids and thus, this spiking approach during the CPT is representative of normal operations.

4.5.4 Spiking for Mercury

Mercury is the only high volatility metal of the HWC MACT. Veolia plans to spike mercury at approximately 0.02 – 0.06 lb/hr during all three metals test runs. The SRE demonstrated during the CPT for mercury will be used to establish a mercury feedrate limit, using extrapolation (see Section 4.6).

Mercury will be fed as a mercuric nitrate solution (unless another compound of mercury is used, based on availability, and approved by U.S. EPA Region 5) contained in vials fed with solids to the incinerator, and will be fed placing a vial in solids fed to the incinerator at regular intervals during the performance test. Mercury is predominantly present in solid feeds processed at Veolia and using a liquid solution for spiking will provide an easily volatilized form fed along with other solid feeds in a manner that is representative of normal operations.

4.5.5 Spiking for Chlorine Loading

Pursuant to 40 CFR §63.1209(n)(4) and 40 CFR §63.1209(o)(1), Veolia will be establishing a maximum total chlorine and chloride feedrate during the CPT. The maximum chlorine feedrate is an OPL to be established in association with the HWC MACT standards for LVM and SVM, and HCl/Cl_2. In addition to the chlorine being fed to the incinerator from the native wastes, chlorine feed to the incinerator will be supplemented during the second part of the

test, that includes testing for HCl/Cl_2, SVM, LVM, mercury, and dioxins/furans by the spiking of hexachloroethane and/or PVC (unless another chlorinated compound is used, based on availability, and approved by U.S. EPA Region 5) The hexachloroethane and/or PVC will be delivered in small, pre-measured plastic baggies at regular intervals along with other solid waste feeds during the performance test. The spiking will be adjusted based on the total chlorine/chloride content of the native wastes.

Although Veolia believes that the native wastes will contain sufficient chlorine content to comply with the requirement in 40 CFR §63.1207(g)(1)(A) for feeding normal (or higher) levels of chlorine during the test for dioxins/furans, chlorine will be spiked throughout the dioxins/furans testing and the second part of the test to provide a consistent feedrate of chlorine throughout the dioxins/furans sampling The average feedrate of chlorine from December 2012 through May 2013 was 82 lb/hr.

4.5.6 Spiking for Ash Loading

Pursuant to 40 CFR §63.1209(m)(3), Veolia will be establishing a maximum ash feedrate during the CPT. The maximum ash feedrate is an OPL to be established in association with the HWC MACT standard for PM. In addition to the ash being fed to the incinerator from the native wastes, the ash feedrate to the incinerator may be supplemented during the PM portion of the CPT if the ash content of the wastes do not contain a sufficient ash content to meet the targeted feedrate.

Veolia believes that the native wastes will contain sufficient ash content to comply with the requirement in 40 CFR §63.1207 (g) (1)(B) for feeding normal (or higher) levels of ash during the SVM and LVM performance tests. If the native wastes that are going to be fed during the testing do not contain a sufficient ash content to meet this requirement, Veolia may need to spike a high ash material into the solids feeds. The average feedrate of ash from December 2012 through May 2013 was 949 lb/hr.

4.6 Metals Extrapolation Method

As stated previously in this section, chromium (LVM), lead (SVM), and mercury will be spiked into the waste feeds to achieve the desired feedrates of each metals category. Veolia plans to extrapolate to higher feedrate limits than actually fed during the test using the SREs determined during the test This is appropriate since it is generally agreed that SREs at higher feedrates would be at least as good as those observed at the lower level. Any extrapolation performed will take into consideration the HWC MACT standards to ensure full compliance. Based on previous discussions with EPA Region 5, the following approach will be used.

The average feedrates of mercury, LVM, and SVM to Unit 4from December 2012 through May 2013 were:

	Mercury (lbs/hr)	LVM (lbs/hr)	SVM (lbs/hr)
Unit 4	0.00492	2.64	2.67

The maximum feedrates of mercury, LVM, and SVM to Unit4 from mid-February to mid-June 2013 were:

	Mercury (lbs/hr)	LVM (lbs/hr)	SVM (lbs/hr)
Unit 4	0.0209	22.6	22.2

The average SRE for the spiked compoundfor the three runs will be calculated from the feed and emission rates for each run. A feedrate limit will then be calculated for each metal category by dividing the maximum emission rate determined using75% of the emission standard for that category by 1 minus the SRE (as a percentage)for the spiked compound representing that category. A similar approach will be followed for LVM (total and pumpable),SVM (cadmium and lead), and mercury. To further assure that this method is protective, Veolia proposes to limit the maximum feedrate for any one category to 3 times the spiked feedrate during the testing. The OPLs for feedrates of the metals will be established as 12-HRAs. Example calculations are shown below.

Maximum Emission Rate for Extrapolation (lb/hr)

$$= (\text{emission standard } (\mu g/m^3 \text{ @ } 7\% \ O_2) * 0.75 * Q_{stack} \text{ (dscfm @ } 7\% \ O_2) * 0.0283 \ m^3/ft^3 * 60 \text{ min/hr}) / (453.6 \text{ g/lb} * 10^6 \ \mu g/g)$$

Where

Emission standard ($\mu g/m^3$ @ 7% O_2)	=	Applicable HWC MACT emission standard;
0.75	=	75% of the applicable HWC MACT emission standard;
Qstack (dscfm @ 7% O_2)	=	Average stack gas flowrate using the stack gas flowrate from each run normalized to 7% oxygen using the measured oxygen concentration from that run;
0.0283 m^3/ft^3	=	Conversion from cubic feet to cubic meters;
60 min/hr	=	Conversion from minutes to hours; and
453.6 g/lb * 10^6 $\mu g/g$	=	Conversion from micrograms to pounds.

Extrapolated Feedrate (lb/hr)

= Maximum Emission Rate / (1 – (SRE/100))

During the comprehensive performance testing, Veolia will spike metals at feedrates that are at the extreme range of normal. Veolia will feed metals at or above Veolia's defined NOC rates which are well above the average feed over the last five years. These demonstrated feedrates will be incorporated in the subsequent NOC. Veolia will discuss with the Agency any further requirements that may be necessary, such as varied carbon feedrates during mercury and dioxins/furans testing, before extrapolation is requested. Any additional information or testing requirements for extrapolation purposes will be done outside of the CPT to not only satisfy the Agency, but also to avoid conflicts between HWC MACT testing requirements and extrapolation requirements.

4.7 Description, Preparation and Delivery of Feeds for the CPT [40 CFR § 63.1207 (f)(1)(vi) and (vii)]

To the extent possible (and with the exception of the spiked constituents noted above), only normal waste materials processed at the facility will be fed to the incinerator during the test program. Waste materials will be stockpiled to meet the objectives for the target test parameters. These wastes will be characterized in advance of the test and kept until needed. All waste materials will be delivered to the facility in accordance with routine operation and currently permitted procedures as described elsewhere in this document.

4.8 Testing During Cleaning Cycles

40 CFR 63.1207(g)(1)(i)(C) requires that tests for PM, SVM, LVM, mercury, and dioxins/furans include a normal cleaning cycle of the PM control device. The baghouse is the unit of the air pollution control train that is designed and operated to control particulate matter. Testing for PM, SVM, LVM, mercury, and dioxins/furans will be performed during a cleaning cycle of the fabric filter (i.e., baghouse). Testing in all three runs of all tests conducted will include a cleaning cycle of the baghouse.

As discussed in Section 2.5.1 of this plan, jets of air are used to clean the filter bags of the baghouse. Periodically, the cleaning sequence is initiated, either at the end of a 4-hour timed cycle, when the differential pressure across the filter reaches a predetermined setpoint of approximately 7.0|| w.c., or when the operator initiates a cycle. Veolia will ensure that the baghouse undergoes a cleaning cycle during each run of the CPT.

4.9 Conditioning Time Needed to Reach Steady State [40 CFR § 63.1207(f)(1)(xii)]

Since there are no recirculating scrubber flows (the lime slurry to the spray dryer is once-through), the conditioning time prior to sampling for the Veolia units is governed primarily by the gas residence time from the feed point to the sampling locations. This residence time is approximately7.1 seconds (see Section 2.3.4)The incinerator will be operated for 30 minutes at the desired feedrates and operating conditions before sampling begins for a given condition of the testing. This will assure all operating parameters are stabilized at the desired settings to achieve steady state, and that the feedrates of spiking materials have stabilized, before sampling begins.

4.10 AWFCO System During the CPT

The CPT will be conducted at operating conditions at the extreme range of normal. A primary objective of the test is to establish limits for operating parameters that ensure compliance with the emission standards during subsequent operations. The HWC MACT, at 40 CFR 63.1207(h)(1) and (2), waives the OPLs during subsequent performance testing under an approved test plan.

One of the objectives of the subsequent CPT is to establish certain HWC MACT limits at or near the limits in the current NOC. To accomplish operation near current OPLs, Veolia will disable the OPLs in the current NOC during the subsequent CPT.

Veolia currently does not envision pre-testing of Unit 4 prior to the CPT. If pre-testing is deemed to be necessary prior to the CPT, Veolia will request up to a 720-hour pre-testing period in which OPLs would be disengaged. Veolia will notify EPA Region 5 if pre-testing is to be conducted.

4.11 Anticipated Test Schedule

The subsequent CPTof Unit 4 will be performed at one test condition(i.e., one mode of operation), and one set of OPLs will be developed. There are two portions to the test condition. In the first part of the test, Veolia will demonstrate compliance with the particulate matter standard of the HWC MACT while the plant is operating to establish the maximum ash feedrate and maximum combustion gas flowrate OPLs as required by the HWC MACT for the particulate matter standard. In the second part of the test, Veolia will demonstrate compliance, and develop OPLs, with the HCl/Cl_2, LVM, SVM, mercury, dioxins/furans, THC, and CO standards of the HWC MACT while the plant is operating to establish maximum total hazardous waste feedrate, maximum pumpable hazardous waste feedrate, minimum primary combustion chamber (PCC) temperature, minimum secondary combustion chamber (SCC) temperature, maximum LVM, SVM, and Hg feedrates, maximum chlorine feedrate, maximum combustion gas flowrate, and maximum inlet temperature to the baghouse. The carbon feedrate to the baghouse will be minimized.

Both parts of the test condition will include three test runs, or test periods. An individual run of the CPT will be performed over three successive days with the testing for the two portions of the single test condition performed back-to-back on each of the three days. For the first part of the test, target operating conditions (i.e., normal waste feedrates, maximum ash feedrate, and maximum stack gas flowrate) will be established and maintained. Once steady-state operations have been achieved, stack testing for PM will begin along with the sampling of waste feeds. The sampling time of a Method 5 run for PM will be one hour. It is anticipated that a Method 5 run for PM will require approximately one and one-half to two hours to complete. The amount of time needed to complete stack sampling for PM will determine the length of the first part of the test condition. The collection of samples of the waste feeds will be coordinated with the Method 5 stack sampling for PM (i.e., with the first sample collected at the beginning, and then samples collected every 15 minutes until the completion of the Method 5 stack sampling).

Following completion of testing for the first part of the test, the operation of Unit 4 will be adjusted to the target operating conditions for the second portion of the test condition (i.e., maximum waste feedrates, normal temperatures in the PCC and SCC, maximum LVM, SVM, and Hg feedrates, maximum chlorine feedrate, maximum stack gas flowrate, minimum carbon feedrate, normal or higher ash feedrate, and minimum sorbent and carrier fluid flowrates to the SDA). Steady-state operation will be established and maintained, and Cr, Pb, Hg, and chlorine will be spiked for 30 minutes prior to the start of testing. Once steady-state operations have been achieved, stack testing for HCl/Cl_2 using a Modified Method 26A, LVM, SVM, and Hg using Method 29, dioxins/furans using Method 0023A, and THC using a continuous analyzer will begin concurrently along with sampling of waste feeds and the spiking materials.

The sampling time of a Modified Method 26A run for HCl/Cl_2 will be one hour. Since the Modified Method 26A probe will not be moved during its sampling, a Modified Method 26A run for HCl/Cl_2 will be completed in one hour.

The sampling time of a Method 29 run for LVM, SVM, and Hg will be two hours. It is anticipated that a Method 29 run for metals will require approximately two and one-half to three hours to complete.

The sampling time of a Method 0023A run for dioxins/furans will be three hours, and the amount of time to complete a Method 0023A run for dioxins/furans is expected to be approximately three and one-half to four hours.

The collection of samples of the waste feeds will be coordinated with the Modified Method 26A, Method 29 and Method 0023A stack sampling trains for HCl/Cl_2, metals, and dioxins/furans, respectively (i.e., with the first sample collected at the beginning, and then samples collected every 15

minutes until the completion of the Method 0023A stack sampling). Composites of waste feeds will be collected and/or prepared for the periods of time over which the Modified Method 26A, Method 29 and Method 0023A stack sampling trains were collected.

The incinerator will be spiked with Cr, Pb, Hg, and chlorine throughout the second part of the test beginning with the concurrent start of the Modified Method 26A, Method 29 and Method 0023A stack sampling trains through the completion of the stack sampling ending with the completion of the Method 0023A sampling train. While spiking of Cr, Pb, Hg, and chlorine will continue throughout the second portion of the test, sampling of the spiking materials for Cr, Pb, Hg, and chlorine will be coordinated with the Method 29 stack sampling for LVM, SVM, and Hg (i.e., at the beginning, at port change, and at completion of stack sampling). The three individual samples of the liquid spiking solutions of Cr and Hg will be analyzed. The individual samples of the solid spiking materials for Pb and chlorine will be archived (i.e. not analyzed unless results or data indicate the need for analysis). A fourth set of samples of the Cr, Pb, Hg, and chlorine spiking solutions and materials will be collected at the completion of the Method 0023A sampling train for dioxins/furans. This fourth sample of the spiking solutions and materials will be archived. Archived samples will be retained 90 days.

Table 4-5 presents a schedule for the conduct of the subsequent CPT of Unit 4.

In August and September of 2008, Veolia conducted tests of Units 2, 3, and 4 required by the information collection requests from U.S. EPA Region 5 dated June 5, 2008 and September 12, 2008. These tests were designed to demonstrate compliance with the applicable emission standards of the HWC MACT for metals, and began on August 11, 2008 for Unit 2, August 5, 2008 for Unit 3, and August 21, 2008 for Unit 4. The initial Comprehensive Performance Tests of Units 2, 3, and 4 commenced on December 8, 2009 for Unit 2; on December 1, 2009 for Unit 3; and on December 16, 2009 for Unit 4. The HWC MACT, at 40 CFR § 63.1207(d), states "*The date of commencement of the initial comprehensive performance test is the basis for establishing the deadline to commence the initial confirmatory performance test and the next comprehensive performance test. You may conduct performance testing at any time prior to the required date. The deadline for commencing subsequent confirmatory and comprehensive performance testing is based on the date of commencement of the previous comprehensive performance test.*" Veolia Sauget understands that U.S. EPA Region 5's position regarding commencement of the subsequent CPTs is based on the initiation of the metals tests performed in 2008, stating in a letter dated August 3, 2012—Veolia must submit to EPA a notification of intent to conduct a CPT and a site-specific test plan for the CPT at least one year before the performance test. 40 CFR § 63.1207(e)(1)(i)…by September 5, 2012||. Veolia submitted to EPA its notification of intent and site-specific test plan for the subsequent CPT on September 5, 2012.

Table 4-5. Daily Schedule for the Subsequent CPT of Unit 4

Day	Start	Stop	Activity
1	8:00	17:00	On-Site Mobilization
2	6:00	8:00	Unit Line Out – Run 1, First Part of the Test Condition
	8:00	10:00	Run 1, First Part of the Test Condition - Stack Testing for PM - Waste Feed Sampling (Samples Collected Every 15 Minutes; Composited and Individual) ■ First Sample at Start of PM Sampling ■ Last Sample Prior to, or at, Completion of PM Sampling - Chlorine Spike Sampling (3 Samples Archived) ■ Taken from the Solid Waste Feed Container Collected at the Beginning, Mid-Point, and Completion of PM Sampling Train
	10:00	11:00	Unit Line Out, Second Part of the Test Condition
	10:30		Begin Spiking of Chromium, Lead, Mercury, and Chlorine
	11:00	14:00	Run 1, Second Part of the Test Condition - Stack Testing for HCl-Cl_2 (Modified Method 26A), LVM, SVM, and Hg (Method 29), and Dioxins/Furans (Method 0023A) – All Stack Sampling Trains Start Concurrently - Waste Feed Sampling (Samples Collected Every 15 Minutes; Composited and Individual) ■ First Sample at Start of HCl-Cl_2, Metals, Dioxins/Furans Sampling ■ Composite Waste Feed Samples Prepared Over Respective HCl-Cl_2, Metals, and Dioxins/Furans Sampling ■ Last Sample for Composites Collected Prior to, or at, Completion of Respective Sampling Trains for HCl-Cl_2, Metals, and Dioxins/Furans - Cr, Pb, Hg, Chlorine Spike Sampling (3 Cr and Hg Samples Collected and Analyzed; 1 Sample Archived – All 4 Pb and Cl Samples Archived) ■ First Sample at Start of HCl-Cl_2, Metals and Dioxins/Furans Sampling ■ Second Sample at Port Change of Metals Sampling Train ■ Third Sample at Completion of Metals Sampling ■ Fourth Sample at Completion of Dioxins/Furans Sampling (Archived)
	15:00	17:00	Sample Recovery

Table 4-5. (continued) Daily Schedule for the Subsequent CPT of Unit 4

Day	Start	Stop	Activity
3	6:00	8:00	Unit Line Out – Run 2, First Part of the Test Condition
	8:00	10:00	Run 2, First Part of the Test Condition - Stack Testing for PM - Waste Feed Sampling (Samples Collected Every 15 Minutes; Composited and Individual) ■ First Sample at Start of PM Sampling ■ Last Sample Prior to, or at, Completion of PM Sampling - Chlorine Spike Sampling (3 Samples Archived) ■ Taken from the Solid Waste Feed Container Collected at the Beginning, Mid-Point, and Completion of PM Sampling Train
	10:00	11:00	Unit Line Out, Second Part of the Test Condition
	10:30		Begin Spiking of Chromium, Lead, Mercury, and Chlorine
	11:00	14:00	Run 2, Second Part of the Test Condition - Stack Testing for HCl-Cl_2 (Modified Method 26A), LVM, SVM, and Hg (Method 29), and Dioxins/Furans (Method 0023A) – All Stack Sampling Trains Start Concurrently - Waste Feed Sampling (3 Samples Collected Every 15 Minutes; Composited and Individual) ■ First Sample at Start of HCl-Cl_2, Metals, and Dioxins/Furans Sampling ■ Composite Waste Feed Samples Prepared Over Respective HCl-Cl_2, Metals, and Dioxins/Furans Sampling ■ Last Sample for Composites Collected Prior to, or at, Completion of Respective Sampling Trains for HCl-Cl_2, Metals, and Dioxins/Furans - Cr, Pb, Hg and Chlorine Spike Sampling (3 Cr and Hg Samples Collected and Analyzed; 1 Sample Archived – All 4 Pb and Cl Samples Archived) ■ First Sample at Start of HCl-Cl_2, Metals and Dioxins/Furans Sampling ■ Second Sample at Port Change of Metals Sampling Train ■ Third Sample at Completion of Metals Sampling ■ Fourth Sample at Completion of Dioxins/Furans Sampling (Archived)
	15:00	17:00	Sample Recovery

Table 4-5. (continued) Daily Schedule for the Subsequent CPT of Unit 4

Day	Start	Stop	Activity
4	6:00	8:00	Unit Line Out – Run 3, First Part of the Test Condition
	8:00	10:00	Run 3, First Part of the Test Condition - Stack Testing for PM_2 - Waste Feed Sampling (Samples Collected Every 15 Minutes; Composited and Individual) ■ First Sample at Start of PM Sampling ■ Last Sample Prior to, or at, Completion of PM Sampling - Chlorine Spike Sampling (3 Samples Archived) ■ Taken from the Solid Waste Feed Container Collected at the Beginning, Mid-Point, and Completion of PM Sampling Train
	10:00	11:00	Unit Line Out, Second Part of the Test Condition
	10:30		Begin Spiking of Chromium, Lead, Mercury, and Chlorine
	11:00	14:00	Run 3, Second Part of the Test Condition - Stack Testing for HCl-Cl_2 (Modified Method 26A), LVM, SVM, and Hg (Method 29), and Dioxins/Furans (Method 0023A) – All Stack Sampling Trains Start Concurrently - Waste Feed Sampling (3 Samples Collected Every 15 Minutes; Composited and Individual) ■ First Sample at Start of HCl-Cl_2, Metals, and Dioxins/Furans Sampling ■ Composite Waste Feed Samples Prepared Over Respective HCl-Cl_2, Metals, and Dioxins/Furans Sampling ■ Last Sample for Composites Collected Prior to, or at, Completion of Respective Sampling Trains for HCl-Cl_2, Metals, and Dioxins/Furans - Cr, Pb, Hg, Chlorine Spike Sampling (3 Cr and Hg Samples Collected and Analyzed; 1 Sample Archived – All 4 Pb and Cl Samples Archived) ■ First Sample at Start of HCl-Cl_2, Metals and Dioxins/Furans Sampling ■ Second Sample at Port Change of Metals Sampling Train ■ Third Sample at Completion of Metals Sampling ■ Fourth Sample at Completion of Dioxins/Furans Sampling (Archived)
	15:00	17:00	Sample Recovery
5	8:00	17:00	Composite Waste Samples, Pack and Ship Samples, Demobilize, Contingency

4.12 Reporting

A Notification of Compliance (NOC) and test report of the subsequent CPT of Unit 4 will be prepared as separate documents and submitted to EPA Region 5 and Illinois EPA no later than 90 days from completion of the field test program. The test report will provide a complete, concise presentation of the test results and will include all necessary supporting documentation.

An example outline of the NOC is presented below:

Section 1.0, Certification Statement – Statement of compliance as required by 40 CFR 63.1210(d)

Section 2.0, Introduction – Summary of test program

Section 3.0, Unit Description – Brief unit description

Section 4.0, Results of Comprehensive Performance Test – Summary of the results of the Comprehensive Performance Test

Section 5.0, Operating Parameter Limits – Listing of the OPLs established from the Comprehensive Performance Test, and the data, and regulatory requirements, used to establish the OPLs.

Section 6.0, Bases for Establishment of OPLs – Summary of the regulatory requirements of the HWC MACT, and Veolia's approach to address those requirements

An example outline of the test report is presented below:

Section 1.0, Executive Summary – Summary of the test objectives and results

Section 2.0, Process Operations – Brief description of the unit, and the process operating data from the test

Section 3.0, Sampling and Analytical Procedures

Section 4.0, Results – The results of the test

Section 5.0, Calculated Values – Values calculated using the results, operating data, and spiking rates.

Section 6.0, Quality Assurance / Quality Control – Detailed discussion of sampling and analytical QA/QC procedures and results.

APPENDIX A – CEMS RATA Report
APPENDIX B – Spiking Report
APPENDIX C – Process Operating Data
APPENDIX D – CMS Performance Evaluation Test Report
APPENDIX E – Field Logbook
APPENDIX F – Sampling Documentation
APPENDIX G – Analytical Data Reports
APPENDIX H – Data Quality Assessments
APPENDIX I – Sampling Equipment/Instrumentation Calibration Document

5.0 Sampling, Analysis, and Monitoring Procedures

The subsequent CPT of Unit 4 will be performed at one test condition to demonstrate system performance and to establish appropriate operating parameter limits (OPLs) for all of the applicable standards of the HWC MACT. Sections 4.3.1 and 4.3.2 present the tests at which the incinerator will be tested. The CPT will include three replicate sampling runs of the one test condition. Table 5-1 summarizes the parameters that will be measured during the test and the frequency of measurement. URS will perform all on site sampling activities during the CPT.

5.1 Sampling Locations and Procedures

Samples will be collected of solid, liquid, and gas streams during the CPT. This section describes the sampling methods that will be employed. Table 5-2 summarizes the sampling methods for each stream and the parameters that will be determined. Because most of the proposed methods are standard reference methods, only brief, summary type descriptions are presented. More detailed descriptions are presented in the indicated reference documents and in the Quality Assurance Project Plan (QAPjP) for the test.

5.1.1 Liquids Sampling Procedures

Samples of the liquid waste feed and chromium spiking solution will be collected in amber glass bottles with Teflon™ cap liners. The mercury solution samples will remain in the vials in which the mercuric nitrate solution was fed to the incinerator. Pre-cleaned bottles will be purchased and used to collect the samples. The liquid waste feed will be characterized for ash, total chlorine,heat content, moisture, density, and viscosityin the first part of the test. In the second part of the test, composite waste feed samples will be prepared over the respective sampling times of the Modified Method 26A stack sampling for HCl/Cl_2, Method 29 stack sampling for metals, and the Method 0023A stacksampling for dioxins/furans. Each of the composite liquid waste feed samples will be analyzed forash, total chlorine,heat content, moisture, density,and viscosity. The composite liquid waste feed samples collected during the Method 29 stack sampling wil also be analyzed formetals (arsenic, beryllium, chromium, cadmium, lead, and mercury). URS will be collecting the spike and waste samples.

Samples of the liquidwaste feed will be collected (approximately) every 15 minutes during each of the three runs of the CPT beginning at the start of stack sampling through completion of stack sampling for both the first and second parts of the CPT. Individual samples (i.e., sub-samples) will be collected (approximately) every 15 minutes throughout the test. No samples will be collected following the completion of stack sampling for the first part or second part of a run.

Samples of the liquid waste feed will be collected at 15-minute intervals during each run. At the beginning and at 15-minute intervals throughout the collection of the of the Method 5 sampling train of the first part of the test, approximately 500-mL samples of the liquid waste feed stream will be collected. At the beginning and at 15-minute intervals

throughout the collection of the Modified Method 26A sampling train of the second part of the test, approximately 500 mL samples of the liquid waste feed stream will be collected. At the beginning and at 15-minute intervals throughout the collection of the Method 29 sampling train of the second part of the test, approximately 300 mL samples of the liquid waste feed stream will be collected. At the beginning and at 15-minute intervals throughout the collection of the Method 0023A sampling train of the second part of the test, approximately 200 mL samples of the liquid waste feed stream will be collected. The sub-samples will be collected at each designated sampling time, and the collected material (i.e., sub-sample) will be transferred into a larger container, producing a composite sample of the liquid waste feed. The composite liquid waste feed samples from the first part and the second part of the CPT will be analyzed.

In addition to the collection of sub-samples every 15 minutes of the liquid waste that will be used to prepare the composite samples that will be analyzed, individual 500 mL samples will be collected every 15 minutes. The individual 500-mL samples collected every 15 minutes will be archived for further analysis, if required. Archived samples will be retained for 90 days.

Samples of the chromium and mercury spiking solutions will be collected in each run of the second part of the test At the beginning, middle (at port change), and end of the Method 29 sampling of the second part of the test, approximately 125-mL samples of the chromium spiking solution will be collected. At the same frequency, samples of the mercury spiking solution will be collected from randomly selected waste feed containers. The individual samples of the chromium and mercury spiking solutions collected during each run of the test will be analyzed for chromium or mercury, respectively. A fourth sample of the chromium and mercury spiking solutions will be collected at thecompletion of the Method 0023A sampling train. This fourth sample will be archived. Archived samples will be retained for 90 days.

Liquid waste samples will be collected upstream of any metal spiking location using the tap sampling procedure specified in EPA Method S004,—Sampling and Analysis Methods for Hazardous Waste Combustion.|| The sample tap will be flushed each time by allowing the sample to flow briefly before the sample is collected. This will ensure that any stagnant accumulation of solids, or other contaminants that may be present in the tap, does not affect the sample integrity or its representation of the stream being sampled.

Adequate amounts of the samples of the liquid waste feed and the chromium and mercury spiking solutions will be collected such that duplicate samples can be made available tdU.S. EPA Region 5.

Table 5-1. Measurement Frequency

Stream/Parameters	Sample Frequency for the Subsequent CPT	
	First Part	Second Part
Liquid Waste Feed		
Ash	3	3
Chlorine	3	3
Moisture	3	3
Heating Value	3	3
Viscosity, Density	3	3
Metals		3[1]
Solid Waste Feed – Containerized and Bulk		
Ash	3	3
Chlorine	3	3
Moisture	3	3
Heating Value	3	3
Metals		3[1]
Spiking Materials[2]		
Mercury Spiking Solution		3
Lead Solid Spiking Material		3
Chromium Spiking Solution		3
Chlorine Solid Spiking Material (if spiked)		3
Stack Gas		
Metals		3[1]
Particulate Matter	3	
HCl/Cl_2		3
Dioxins/Furans		3
CO_2, O_2	Continuous	Continuous[3]
Total Hydrocarbons		Continuous[3]
Moisture	Concurrent with isokinetic sampling	Concurrent with isokinetic sampling
CO, O_2 [4]	Continuous	Continuous

[1] Analysis is for As, Be, Cd, Cr, Pb, and Hg .

[2] Each collected sample of the mercury and chromium spiking solutions will be analyzed for the target spiking metal. Samples of the lead and chlorine spiking materials will be archived.

[3] Allowing for hourly calibration of the THC monitor.

[4] Plant monitors.

Table 5-2. Sampling Methods

Stream	Sampling Method	Sampling Frequency	Compositing Approach	Analytical Parameters
Liquid Waste Feed	Tap (Method S004)	First part of the test condition - Every 15 Minutes During Method 5 sampling Second part of the test condition - Every 15 Minutes During Modified Method 26A, Method 29, and Method 0023A sampling	Composite all subsamples from each test period	Ash Chlorine Moisture Heating Value Density Viscosity Metals[1]
Containerized Solid Waste Feed	Grab or Scoop (Method S007) – Solids	First part of the test condition - Every 15 Minutes During Method 5 sampling Second part of the test condition - Every 15 Minutes During Modified Method 26A, Method 29, and Method 0023A sampling	Composite all subsamples from each test period	Ash Chlorine Moisture Heating Value Metals[1]
Bulk Solid Waste Feed	Grab or Scoop (Method S007) – Solids	First part of the test condition - Every 15 Minutes During Method 5/26A sampling Second part of the test condition - Every 15 Minutes During Method 0023A sampling	Composite all subsamples from each test period	Ash Chlorine Moisture Heating Value Metals[1]
Chromium Spiking Solution	Tap (Method S004)	Second part of the test condition - Beginning, middle, and end of Method 29 sampling End of Method 0023A sampling	Analyze all subsamples collected during Method 29 sampling Archive subsample collected at end of Method 0023A sampling	Chromium

Table 5-2. (continued) Sampling Methods

Stream	Sampling Method	Sampling Frequency	Compositing Approach	Analytical Parameters
Mercury Spiking Solution	Grab	Second part of the test condition - Beginning, middle, and end of Method 29 sampling End of Method 0023A sampling	Analyze all subsamples collected during Method 29 sampling Archive subsample collected at end of Method 0023A sampling	Mercury
Lead and Chlorine Spiking Materials	Grab	Second part of the test condition - Beginning, middle, and end of Method 29 sampling End of Method 0023A sampling	None - Archive	Archive
Stack Gas	EPA Method 2	Concurrent with isokinetic sampling for EPA Methods 5, 29, and SW-846 Method 0023A	NR	Flowrate
	EPA Method 3A	Concurrent with isokinetic sampling – First and Second Parts of the Test	NR	O_2, CO_2
	EPA Method 4	Concurrent with isokinetic sampling – First and Second Parts of the Test	NR	Moisture
	EPA Method 5	1+ hour collected isokinetically – First Part of the Test	NR	PM
	Modified EPA Method 26A	1+ hour collected isokinetically at single point – Second Part of the Test	NR	HCl/Cl_2
	EPA Method 29	2+ hour collected isokinetically - Second Part of the Test	NR	Metals [1]
	SW-846 Method 0023A	3+ hour collected isokinetically - Second Part of the Test	NR	Dioxins/Furans
	EPA Method 25A	Concurrent with isokinetic sampling – Second Part of the Test	NR	THC
	Plant CEMS	Continuous	NR	CO, O_2

[1] Analysis is for As, Be, Cd, Cr, Pb, and Hg only in samples from the second part of the test condition.

NR = Not Required

5.1.2 Solids Sampling Procedures

Solid wastes are fed to Unit 4 as both containerized and bulk. For the containerized solid waste feedstream, every 15 minutes throughout the test randomly selected container being fed to the incinerator will be collected. Approximately 1-liter samples of bulk solids (Unit 4 only) will be collected every 15 minutes throughout the test from the waste feed bins in the Bulk Solids Storage Building. Grab samples from the waste bins will be collected using a pre-cleaned scoop. Sub-samples of the containerized and bulk solid wastes, respectively, collected from the first part of the test will be composited so that the result is a composite sample for the first part of the test. Sub-samples from the second part of the test will be composited to produce composite samples over the respective sampling times of the Modified Method 26A stack sampling for HCl/Cl_2, Method 29 stack sampling for metals, and the Method 0023A stack sampling for dioxins/furans for the second part of the test. In the preparation of the composite samples of the containerized solid waste that will be analyzed, sub-samples will be taken from the randomly selected containers using a pre-cleaned scoop and combined. In the preparation of the composite samples of the bulk solid waste that will be analyzed, material will be taken from the sub-samples collected at 15-minute intervals and combined. URS will be collecting the spike and waste samples.

Analyses will be performed on the composite samples. All of the composite solid waste feed samples, containerized and bulk, from the first and second parts of the test will be characterized for total chlorine, ash, moisture, and heat content. The composite containerized and bulk solid waste feed samples collected during the Method 29 stack sampling from the second part of the test will also be analyzed for metals (arsenic, beryllium, chromium, cadmium, lead, and mercury).

In addition, approximately 500-mL samples of the randomly selected containerized waste collected every 15 minutes will be taken and archived for further analysis, if required. Following the removal of material from the sub-samples of the bulk solids collected every 15 minutes to prepare the composite sample for the test, the remaining portion of the sub-samples of bulk solid waste will be archived for further analysis, if required. Archived samples will be retained for 90 days.

Samples of the solid waste feeds, containerized and bulk, will be collected (approximately) every 15 minutes during each of the three runs of the CPT beginning at the start of stack sampling through completion of stack sampling for the first and second parts of the CPT. Individual samples (i.e., sub-samples) will be collected (approximately) every 15 minutes throughout the test. No samples will be collected following the completion of stack sampling for the first part or second part of a run.

Spikes of solid lead and chlorine will be added to the containerized solid waste Samples of the chlorine and lead spiking materials will be collected during the Method 29 stack sampling in the second part of the test Three grab samples of the chlorine and lead spiking materials will be collected at the beginning, middle (at port change), and end of the Method 29 sampling of the second part of the test. A fourth sample of the lead and chlorine spiking materials will be collected at the completion of the Method 0023A sampling train in the second part of the test. All samples of the lead and chlorine spiking materials will be archived. Archived samples will be retained for 90 days.

Adequate amounts of the samples of the solid waste feed and the lead and chlorine spiking materials will be collected such that duplicate samples can be made available to EPA Region 5.

5.1.3 Stack Gas Sampling Procedures

The stack gas emissions will be collected for determination of the parameters indicated in Tables 5-1 and 5-2. The methods that will be employed are described below.

5.1.3.1 Sample Port Location

The stack is 100-feet high and has an inside diameter of 48 inches. There are four orthogonal ports located at one level. An additional port located about 4 feet below the upper orthogonal ports, and about 45° between the orthogonal ports, will be used for the Modified Method 26A sampling for HCl/Cl_2. The number of sampling points for the isokinetic sampling by Method 5, Method 29, and Method 0023A will be determined in accordance with EPA Method 1, and is discussed further in the QAPjP.

5.1.3.2 EPA Methods 2 and 4 (Flowrate and Moisture)

Concurrent with the performance of the isokinetic sampling train, measurements will be made to determine gas velocity by 40 CFR Part 60, Appendix A, Method 2, and moisture by Method 4.

5.1.3.3 EPA Method 29 (Metals)

Samples of the stack gas emissions will be collected isokinetically for the HWC MACT metals As, Be, Cd, Cr, Pb, and Hg using Method 29 from 40 CFR Part 60, Appendix A.

This method is basically an EPA Method 5 sampling train with some very specific modifications:

- The nozzle and probe liner will be glass or quartz. All connections will be glass or Teflon;

- The filter will be quartz or glass fiber, with a fritted glass or Teflon support;
- The first impinger will be empty (optional);
- The second and third impingers will contain a nitric acid/hydrogen peroxide solution;
- The fourth impinger will be empty;
- The fifth and sixth impingers will contain acidic potassium permanganate; and
- Modified Greenburg-Smith impinger containing silica gel.

Following sampling, the probe and nozzle of the sampling train will be recovered using a brush containing no metal. The probe and nozzle will be rinsed with 0.1 normal nitric acid.

Sampling will involve collecting samples isokinetically across both diagonals of the stack. The sampling rate for each train will be between 0.5 and 0.75 dry standard cubic feet per minute. A minimum of 45 dry standard cubic feet will be collected over a minimum sampling time of 120 minutes.

5.1.3.4 EPA Method 5 (PM)

Samples for the determination of particulate matter (PM) in stack emissions will be collected in the first part of each run of the test condition using EPA Method 5. This sample train consists of the following components:

- Glass (quartz) nozzle;
- Heated, glass (quartz)-lined probe;
- Heated Teflon mat filter with a Teflon filter support;
- Optional empty knockout impinger;
- Modified Greenburg-Smith impinger containing 100 mL of DI water;
- Greenburg-Smith impinger containing 100 mL of DI water;
- Empty Modified Greenburg-Smith impinger; and
- Modified Greenburg-Smith impinger containing silica gel.

The procedure specified in EPA Method 5 will be used to determine particulate matter. These procedures require the isokinetic extraction of particulate matter on a filter maintained at a controlled temperature between 223°F and 273°F. A Teflon union will be used to connect the quartz nozzle to the quartz probe liner. The particulate mass, which includes all material that condenses at or above the filtration temperature, is determined gravimetrically, after desiccation.

Sampling will involve collecting samples isokinetically across both diagonals of the stack. The sampling rate for each train will be between 0.5 and 0.75 dry standard cubic feet per

minute. A minimum of 30 dry standard cubic feet will be collected over a minimum sampling time of 60 minutes.

5.1.3.5 Modified EPA Method 26A (HCl/Cl_2)

During the second part of the test condition of the CPT, samples for the determination of HCl/Cl_2 in stack emissions will be collected using a modification of EPA Method 26A proposed and approved by EPA Region 5. This sample train consists of the following components:

- Glass (quartz) nozzle;
- Heated, glass (quartz)-lined probe;
- Heated Teflon mat filter with a Teflon® filter support;
- Teflon® transfer line;
- Optional empty knockout impinger;
- Greenburg-Smith impinger containing 100 mL of 0.1 N H_2SO_4;
- Greenburg-Smith impinger containing 100 mL of 0.1 N H_2SO_4;
- Modified Greenburg-Smith impinger containing 100 mL of 0.1 N NaOH;
- Modified Greenburg-Smith impinger containing 100 mL of 0.1 N NaOH; and
- Modified Greenburg-Smith impinger containing silica gel.

The procedures specified in EPA Method 5, as referenced in EPA Method 26A, will be used for the isokinetic collection of the sample except that the sample will be collected at a single point located at the center of the stack. A Teflon® union will be used to connect the glass or quartz nozzle to the glass or quartz probe liner. The filter and probe will be kept at a temperature between 248ºF and 273ºF, and a Teflon®-backed filter will be used, as specified in EPA Method 26A.

Sampling will involve collecting samples isokinetically at a single point at the center of the stack. The sampling rate for each train will be between 0.5 and 0.75 dry standard cubic feet per minute. A minimum of 30 dry standard cubic feet will be collected over a minimum sampling time of 60 minutes.

Chloride analysis will be performed on the impinger contents using ion chromatography according to Method 26A.

5.1.3.6 SW-846 Method 0023A (Dioxins/Furans)

Stack gas emissions samples will be collected for dioxins/furans using SW-846 Method 0023A. The sampling train consists of a heated probe, heated filter, sorbent module, and pumping and metering unit. A gooseneck nozzle of proper size to allow isokinetic sample

collection is attached to the probe. S-type pitot differential pressure is monitored to determine the isokinetic sampling rate.

From the heated filter, sample gas enters the sorbent module. The sorbent module consists of a water-cooled condenser followed by the XAD-2 resin trap. After the resin trap is a dry modified Greenburg-Smith impinger that collects the aqueous condensate. The stem of this impinger is short to reduce carryover of collected aqueous condensate. Following the condensate trap are two impingers containing 100 mL of DI water to collect any mist carryover from the condensate trap and a final impinger containing a desiccant to dry the sample gas before metering. A pump and dry gas meter are used to control and monitor the sample gas flowrate.

Sampling of the stack gases will be conducted in accordance with published protocol. This will involve collecting samples isokinetically across both diagonals of the stack. The sampling rate for each train will be between 0.5 and 0.75 dry standard cubic feet per minute (dscfm). A minimum of 2.5 dry standard cubic meters (88.3 dry standard cubic feet) will be collected over a minimum sampling time of 3 hours.

5.1.3.7 Continuous Emissions Monitoring (THC, CO_2, CO and O_2)

CEMs will be used to monitor the concentrations of THC (total hydrocarbons), CO_2, CO, and O_2 in the stack gas.

CO and O_2 results will be reported for the stack gases from permanent installation CEMS of the incinerator facility. THC, CO_2, and O_2 continuous monitors will be provided by the test contractor conducting the test.

The concentrations of total hydrocarbons (THC), carbon dioxide (CO_2), and oxygen (O_2) in the stack gas will be determined by the test contractor conducting the test using EPA Methods 25A and 3A, respectively. CO_2 and O_2 will be monitored using Method 3A to determine the stack gas composition (i.e., molecular weight) to determine the flowrate of the stack gas. Both of these methods utilize continuous monitors.

5.2 Analysis Procedures

Samples collected during the Comprehensive Performance Test will be analyzed for the parameters specified in Table 5-3. This section describes the analytical methods that will be employed. Since most of the proposed methods are standard reference methods, only brief summary type descriptions are presented. More detailed descriptions can be found in the indicated reference documents and in the QAPjP. All analyses will be performed by Test America Laboratories in Knoxville, TN. Analytical results for the waste feed samples will be reported on an *as-received* or *wet weight* basis. Samples of the waste feed will not be dried prior to analysis.

Table 5-3. Summary of Analytical Methods

Parameter	Stream	Analytical Method
O_2, CO_2	Stack Gas	EPA Method 3A
Moisture	Stack Gas	EPA Method 4
Metals	Waste Feeds, Spiking Solutions, Stack Gas	ICPES - SW-846 Method 6010B CVAAS - Hg, SW-846 Method 7470A or 7471A
Particulate Matter	Stack Gas	Gravimetric - EPA Method 5
HCl/Cl_2	Stack Gas	IC - EPA Method 26A
Dioxins/Furans	Stack Gas	HRGC/MS – SW-846 Method 8290
Composition/Physical Parameters	Waste Feeds	EPA and/or ASTM Standard Methods

5.2.1 Composition and Physical Parameters Analysis

Samples of the waste feeds will be collected for determination of a number of chemical and physical parameters, including:

- Ash;
- Total chlorine;
- Moisture;
- Heating value;
- Density; and
- Viscosity.

These analyses will be performed using appropriate EPA and/or ASTM standard methods.

5.2.2 Metals Analysis

Waste feed samples will be analyzed for metals using a trace level inductively coupled argon plasma emission spectroscopy (ICPES) and atomic absorption spectroscopy. Samples will be prepared for analysis using SW-846 Method 3050B. The metals to be analyzed by ICPES (SW-846 Method 6010B) are arsenic (As), beryllium (Be), cadmium (Cd), chromium (Cr), and lead (Pb). Mercury (Hg) will be analyzed using Method 7471A of SW-846. Spiking solutions of chromium and mercury will be analyzed for chromium and mercury, respectively.

The Method 29 sampling train will be used to collect samples of the stack gas for metals. The samples will be analyzed using ICPES according to SW-846 Method 6010B, and mercury will be analyzed using Method 7470A of SW-846. The metals to be analyzed by ICPES are As, Be, Cd, Cr, and Pb.

5.2.3 Particulate Matter Analysis

The particulate matter concentration of the stack gas will be determined following 40 CFR 60, Appendix A, Method 5 protocols. The wash from the nozzle, probe liner, and glassware prior to the filter on the sampling train will be evaporated, and the mass determined on an analytical balance. The filter will be removed from the sampling train, desiccated, and weighed to determine the mass of particulate on the filter. The combined mass from the filter and the evaporated wash are then related to the total volume of gas sampled to determine the particulate loading.

5.2.4 HCl and Cl_2 Analysis

The sulfuric acid and sodium hydroxide impinger catches and rinses from the Modified Method 26A sampling trains will be analyzed for chloride ion concentrations. Chloride analysis will be performed using EPA Method 26A, an IC technique.

5.2.5 Dioxins/Furans Analysis

Samples of the stack gas collected using SW-846 Method 0023A will be analyzed for dioxins/furans using SW-846 Method 8290, high resolution gas chromatography (HRGC) with high resolution mass spectroscopy (HRMS) analytical technique. The analytical protocol includes quantitation of all dibenzodioxins and dibenzofurans including four or more chlorine atoms. The method provides congener class definition for each of the five congener groups (tetra-, penta-, hexa-, hepta-, and octa-). In addition, each individual isomer containing the 2,3,7,8-substitution pattern will be individually quantified.

5.3 Process Monitoring Procedures

The incinerator system is monitored to ensure that it is operating in accordance with the permitted conditions. During the performance test, the automatic waste feed cutoff system will be operational; however, AWFCO limits in the current NOC will be adjusted or disabled during

the performance testing period, and during up to a 720-hour pre-testing period prior to the test, if pre-testing is conducted. Veolia will notify EPA Region 5 if pre-testing is to be conducted.

5.4 Quality Assurance/Quality Control Procedures

An effective QA/QC strategy is essential to ensure the usefulness and reliability of data collected in any source testing effort. This QA/QC program is documented in a project-specific QAPjP. The QAPjP details QA/QC activities for the Comprehensive Performance Test, as well as specifications for sampling and analysis activities, objectives, and procedures. The QAPjP conforms to the requirements detailed in *Guidance for Quality Assurance Project Plans (QA/G-5).*

The primary objective of the QA/QC effort will be to provide the mechanism whereby the quality of the measurement data is known and documented and is subject to ongoing evaluation throughout the course of the project. To achieve this objective, the QA/QC program must serve two distinct, interrelated functions. One function will be that of providing a QC database which, together with performance audit results, can be used to assess measurement data quality in terms of precision and accuracy. Inherent and implied in this assessment function is a second, parallel function of controlling data quality within prescribed limits of acceptability.

The QAPjP delineates specific sampling and analytical procedures, calibration requirements, internal QC checks, data reduction and validation procedures, and sample custody requirements for each sampling/analytical activity. It also addresses general QA/QC considerations such as:

- Data recording;
- Documentation procedures;
- Project organization and responsibilities;
- Preventative maintenance operations;
- Reporting requirements; and
- Corrective action mechanisms.

In addition to these general considerations, the QAPjP specifies schedules for performance and the duration of sampling (especially for stack gas samples) to provide adequate method detection limits to demonstrate compliance with the metals emission standards. The QAPjP also devotes considerable attention to the internal QC checks that will be used to ensure that the measurement data meet data quality requirements. These QC checks include procedures such as:

- Daily calibration of analytical instruments;
- Calibration of sampling equipment and apparatus; and
- Analytical checks using QC standards to assess bias and precision.

The following sections present a brief overview of the QA/QC activities that are an integral part of the stack test program. Table 5-4 lists specific QA/QC activities that will be performed.

Table 5-4. Summary of Sampling and Analytical QC Requirements[1]

	Field Blank[2]	Trip Blank[3]	Break-Through	Duplicate Sample or Analysis[4,5]	MS/ MSD[6]	LCS/LCSD	Surrogate Spike
Particulate Matter (EPA Method 5)							
Stack Gas	1	1					
HCl/Cl_2 (Modified EPA Method 26A)							
Stack Gas	1	1		All	1	1	
Dioxins/Furans (SW-846 Method 0023A)							
Stack Gas	1	1				1	All
Metals (EPA Method 29)							
Stack Gas	1	1			1	1	
Waste Feeds				1	1	1	
Composition							
Waste Feeds				1	1[7]		

[1] Table indicates number of QC samples planned for the Comprehensive Performance Test, unless otherwise indicated.

[2] Field blanks for gas samples are recovered from assembled trains that have been leak checked but through which no gas sample has passed.

[3] Trip blanks consist of applicable filters, sorbents, and solutions. These will be analyzed only if necessary based on field blank analysis results.

[4] Field duplicates will be collected as duplicate sets of subsamples used to prepare the composite sample.

[5] Field duplicate will be collected of the liquid waste only in the CPT of each unit during the Method 29 sampling.

[6] Matrix spiked samples will be spiked prior to sample preparation (digestion/extraction), except for metals train samples, which will be spiked following digestion.

[7] MS/MSD for chlorine only.

5.4.1 Sampling QA/QC

The QAPjP prescribes QC procedures to be implemented during all sampling activities and specifies guidelines for:

- Equipment calibration;
- Sampling protocol; and
- Sample handling techniques.

The checkout and calibration of sampling equipment is an important function in maintaining data quality. Referenced calibration procedures are prescribed, and the results will be properly documented and retained. Calibrations will be performed prior to field deployment.

Sampling techniques to be used during the Comprehensive Performance Test will be EPA references. Sample collection will be done in accordance with the methods prescribed in the QAPjP. The QA procedure checks will include the use of standard data forms and source sampling data sheet checklists. Other checks will include performance of the following:

- Visual inspections of sampling systems;
- System leak checks before and after sampling;
- Heating system checks;
- Impinger ice checks;
- Isokinetic sampling rate checks; and
- Daily data review and calculation checks.

After the samples have been properly obtained in the field, their subsequent handling during transfer to the analytical laboratories becomes an important factor in the successful performance of a stack test program. All collected samples will be labeled with adequate descriptions of the samples to prevent confusion among multiple samples. Samples will be inventoried against logbook records before shipment. All sample container closures will be taped to ensure against sample leakage during shipment. The frequency of performance of specific activities for this stack testing is presented in Table 5-4.

5.4.2 Procedures for Analytical Quality Control

A regime of analytical QA/QC is specified in the QAPjP. The procedures will use various checks to determine the validity of analyses. These include:

- Calibration standards;
- Certified standards;
- In-lab standards;
- Blanks;
- Spikes; and
- Replicates.

QA begins with the sample log and continues through the reporting of data. The unique identifying number assigned in the field and recorded in the sample log facilitates tracking and identification and prevents mix-ups during the analysis process. Chain-of-custody reports will be used to monitor samples through analytical laboratories.

Chemical characterization of emission and process samples will be performed using standard wet-chemistry, IC, ICPES, AAS, and GC/MS techniques. The accuracy and precision of analyses will be documented through the QA/QC programs specified in the QAPjP. Accuracy will be evaluated by analyzing standards and blank and spiked samples. Precision data will be reported for matrix spike duplicates, analytical duplicate samples, and surrogate spikes.

Appendix A

Continuous Monitoring System Performance Evaluation Test Plan