FREE PHASE RECOVERY SYSTEM DESIGN

AVERY, IDAHO

JULY 1990

POTLATCH CORPORATION

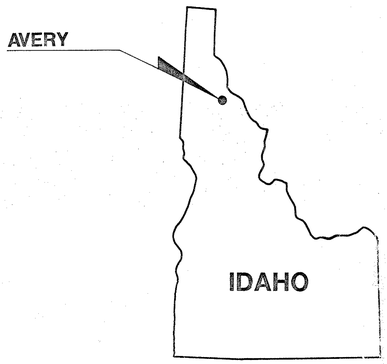

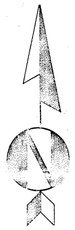

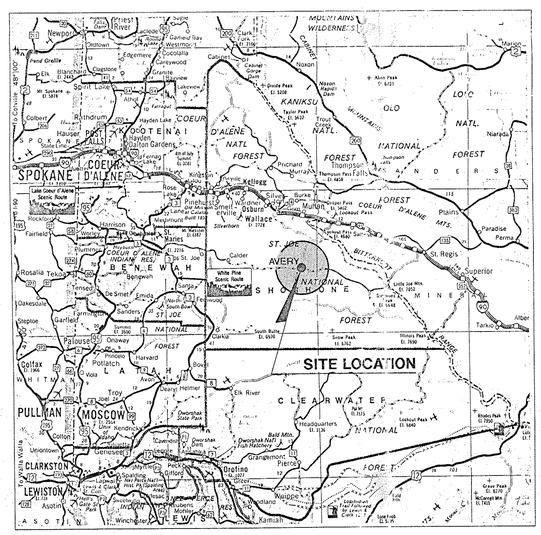

VICINITY MAP

TABLE OF CONTENTS

1. SHEET 1 OF 3 TITLE SHEET
2. SHEET 2 OF 3 SITE PLAN
3. SHEET 3 OF 3 CROSS SECTION/DETAILS

LEGEND

+-	EXISTING ELECTRICAL PANEL BOX
⊠	UTILITY VAULT
—— E ——	ELECTRICAL CONDUIT
—— W ——	WATER LINE
—— O ——	FREE PHASE PIPING
—— C ——	PUMP ELECTRICAL POWER AND CONTROLS CONDUIT

" NOT RELEASED FOR CONSTRUCTION"

DESIGNED BY: LEN J. WEATHERS
DRAWN BY: JUAN A. HERNANDEZ
CHECKED BY: MARK T. OTTEM
CHECKED BY:

POTLATCH CORPORATION

TYPE DRAWING: FINAL X CONST. RECORD
DATE: 7/20/90
JOB NO. 2296-01
SHEET 1 OF 3 SHEETS

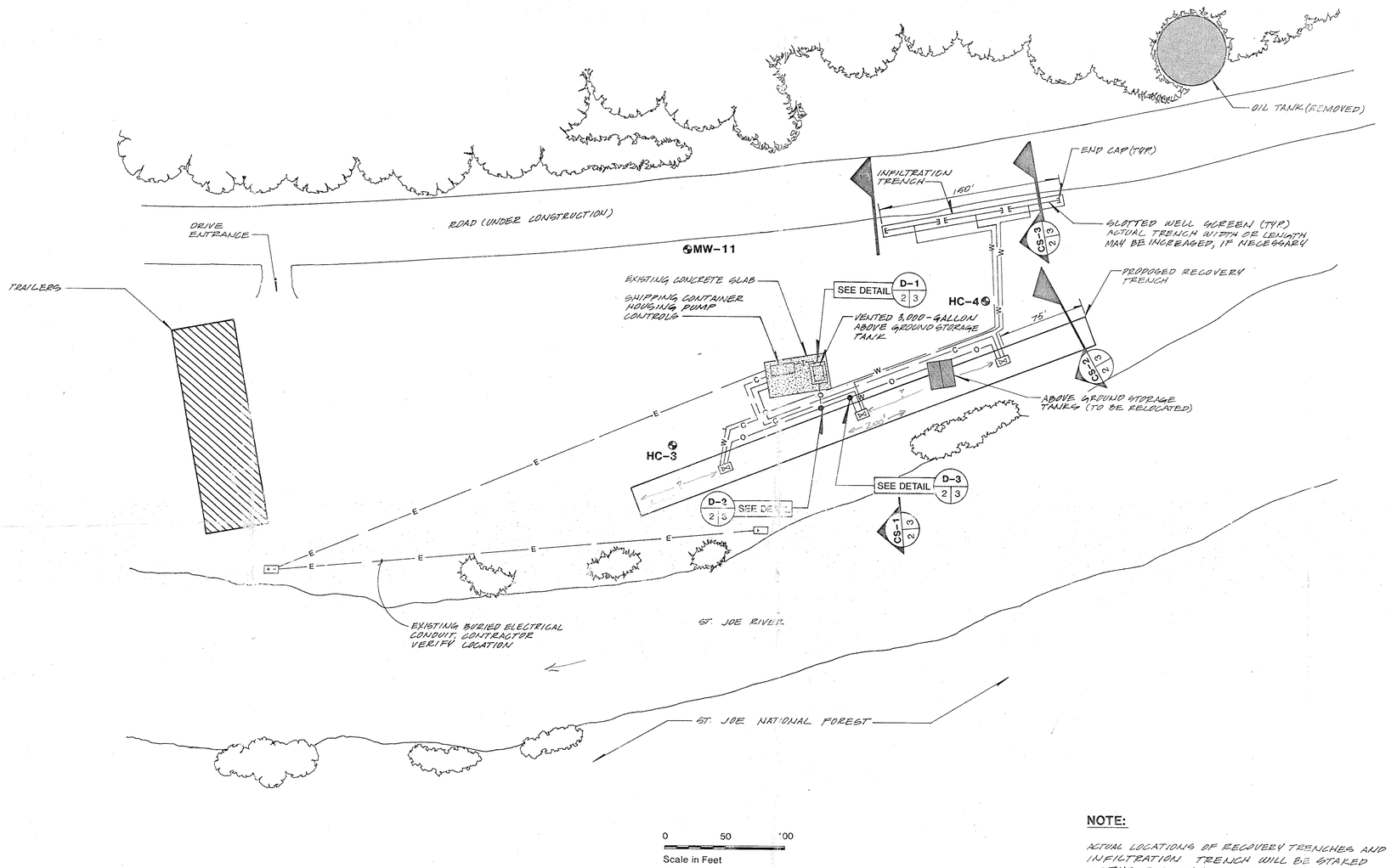

NOTE:

ACTUAL LOCATIONS OF RECOVERY TRENCHES AND INFILTRATION TRENCH WILL BE STAKED IN THE FIELD BY THE ENGINEER.

BENCHMARK: CONCRETE PAD

DESIGNED BY: LEN J. WEAVERS
DRAWN BY: JUAN A. HERNANDEZ
CHECKED BY: MARK T. OTTEN
CHECKED BY:

NO. DATE BY REVISION

HARTCROWSER
Hart Crowser, Inc.
1910 Fairview Avenue East
Seattle, Washington 98102-3699
206.324.9530

FREE PHASE RECOVERY SYSTEM DESIGN

SITE PLAN

POTLATCH CORPORATION

TYPE DRAWING	SHEET
FINAL ✕ CONST. RECORD	2 OF 3 SHEETS
DATE: 7/20/90	
JOB NO. 2296-01	

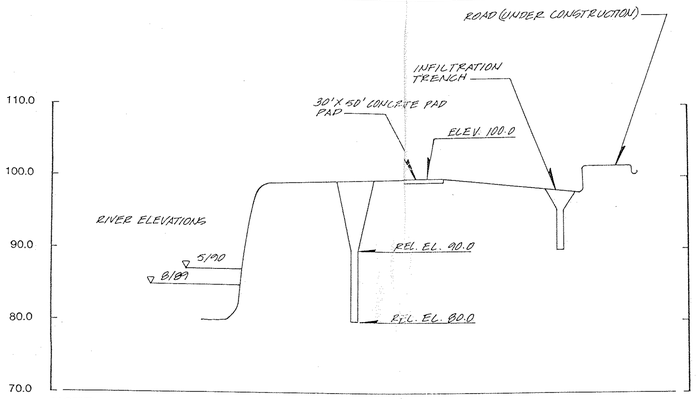

NOTE:

REFERENCE POINT FOR RELATIVE ELEVATIONS IS 30'X50' CONCRETE PAD.

SECTION CS-1 (2|3)

NOT TO SCALE

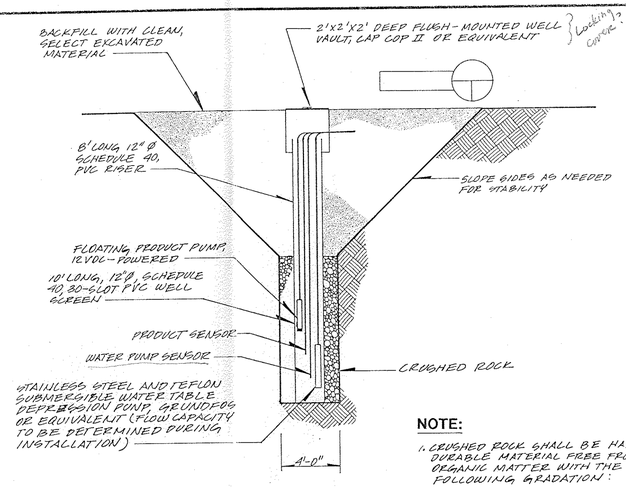

NOTE:

1. CRUSHED ROCK SHALL BE HARD, DURABLE MATERIAL FREE FROM ORGANIC MATTER WITH THE FOLLOWING GRADATION:

US SIEVE SIZE	% FINER
3 INCH	100
1/4 INCH	0-2

SECTION CS-2 (2|3)

NOT TO SCALE

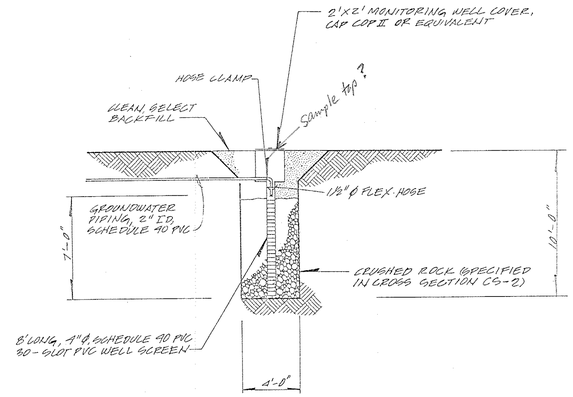

SECTION CS-2 (3|3)

NOT TO SCALE

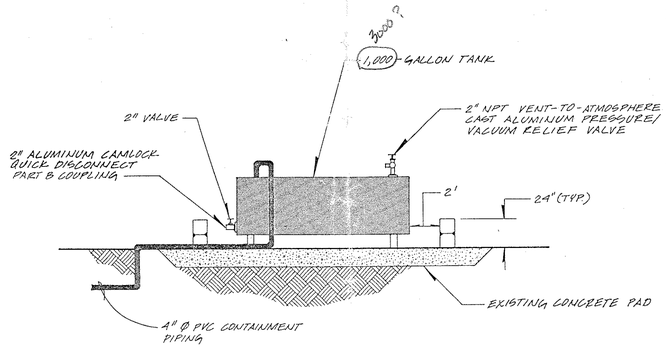

1. CONSTRUCT CONTAINMENT ON ALL SIDES OF TANK (ALONG SIDES OF CONTAINMENT NOT SHOWN IN DRAWING.

TANK AND CONTAINMENT DETAIL (D-1 | 2|3)

NOT TO SCALE

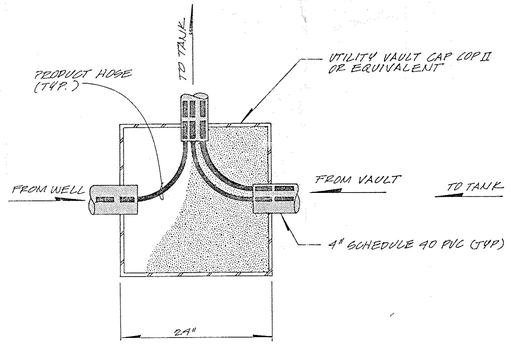

UTILITY VAULT DETAIL (D-2 | 2|3)

NOT TO SCALE

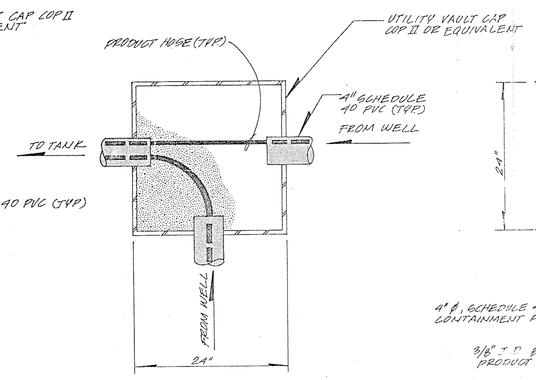

UTILITY VAULT DETAIL (D-3 | 2|3)

NOT TO SCALE

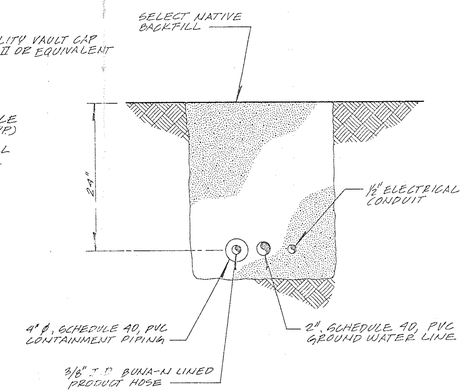

TRENCH DETAIL (D-4 | 3|3)

NOT TO SCALE

BENCHMARK:

NO.	DATE	BY	REVISION

DESIGNED BY: CHECKED BY:
DRAWN BY: CHECKED BY:

HARTCROWSER
Hart Crowser, Inc.
1910 Fairview Avenue East
Seattle, Washington 98102-3699
206.324.9530

FREE PHASE RECOVERY SYSTEM DESIGN

CROSS SECTION/DETAILS

POTLATCH CORPORATION

TYPE DRAWING: PRELIM. / CONST. / RECORD

DATE:

JOB NO.

SHEET 3 OF 3 SHEETS