GC/MS REPORT SUMMARY SHEET

PROJECT Ridgefield SAMPLES ANALYZED 91130150, 2, 4, 6 & 8
91130160, 1, 2, 4, 6 & 8

1. SUMMARY REPORT SHEETS

A) LISTING OF SAMPLES REPORTED..... ✓

B) SURROGATE SUMMARY SHEET..... ✓

C) METHOD BLANK SUMMARY SHEETS

SAMPLES EXTRACTED WITH BLANK..... ✓
COMPOUNDS PRESENT IN BLANK..... NA

D) INTERNAL STANDARD AREA SUMMARY SHEET.... ✓

E) SAMPLE HOLDING TIMES AND DILUTION SUMMARY SHEET..... ✓

F) BFB TUNE/DATE/SAMPLE SUMMARY SHEETS..... ✓

G) MAGNETIC TAPE SUMMARY SHEETS..... NA

2. STANDARDS

A) INITIAL*....(IBM REPORT SHEET)..... ✓

B) ON-GOING*....(IBM REPORT SHEET)..... ✓

3. BFB TUNE CHECK

A) SPECTRUM/ION ABUNDANCE LISTING..... ✓

4. BLANKS

A) BLANK DATA PACKAGE**..... ✓

B) IBM REPORT SHEETS..... ✓

5. SPIKES

A) SPIKE DATA PACKAGE..... ✓

B) IBM REPORT SHEETS..... ✓

6. SAMPLES

A) SAMPLE DATA PACKAGE..... ✓

B) IBM PERORT SHEETS..... ✓

* All Initial and On-going Standard Raw Data Are Stored in Separate Files.
**All Blank Raw Data Are Stored in Separate Files.

USEPA RCRA 3057910

HWV127A1.NAM
07/02/91

A130150.QFD
A130152.QFD
A130152Y.QFD
A130152Z.QFD
A130154.QFD
A130156.QFD
A130158.QFD
A130160.QFD
A130161.QFD
A130162.QFD
A130164.QFD
A130166.QFD
A130168.QFD
ABW1099.QFD
ABW1100.QFD

17WV127A1

WATER SURROGATE PERCENT RECOVERY SUMMARY
(Page 1)

Case No. HWD-127A/1011 Contract Laboratory MANCHESTER LAB Contract No. AGDD3A

SMO TRAFFIC NO.	VOLATILE 1-Bromo-2-Fluoroethane (SS) 86 115	Toluene (d8) (SS) 88 110	p-Bromofluorobenzene (SS) 86 115	1,2-Dichloroethane-d4 (SS) 76 114	1,2-Dichlorobenzene-d4 (SS) 78 123						
A91130150	106	99	100	101							
A91130152	111	100	98	104							
A91130152Y	107	98	99	101							
A91130152Z	98	96	101	98							
A91130154	120*	100	96	108							
A91130156	118*	101	101	111							
A91130158	122*	98	100	111							
A91130160	89	91	100	95							
A91130161	97	90	90	88							
A91130162	111	92	93	104							
A91130164	107	91	91	96							
A91130166	107	91	94	96							
A91130168	108	93	93	96							
ABW1099	92	96	101	97							
ABW1100	104	91	92	98							

advisory only

* VALUES ARE OUTSIDE OF CONTRACT REQUIRED QC LIMITS

Volatiles: 3 out of ~~78~~ 60; outside of QC limits
Semi-Volatiles: 0 out of 0; outside of QC limits
Pesticides: 0 out of 0; outside of QC limits

Comments:

4A
VOLATILE METHOD BLANK SUMMARY

Lab Name: MANCHESTER LAB Contract: AGDD3A

Lab Code: _____ Case No.: HWD-12 SAS No.: 1011 SDG No.: RIDGEF

Lab File ID: A130150 Lab Sample ID: _____

Date Analyzed: _____ Time Analyzed: 1243

Matrix: (soil/water) _____ Level:(low/med) _____

Instrument ID: _____

THIS METHOD BLANK APPLIES TO THE FOLLOWING SAMPLES, MS AND MSD:

	EPA SAMPLE NO.	LAB SAMPLE ID	LAB FILE ID	TIME ANALYZED
01	A91130150		A130150	1243
02	A91130152		A130152	1321
03	A91130154		A130154	1406
04	A91130156		A130156	1445
05	A91130158		A130158	1525
06	ABW1099		ABW1099	1203
07	A91130160		A130160	1142
08	A91130161		A130161	1311
09	A91130162		A130162	1351
10	A91130164		A130164	1431
11	A91130166		A130166	1512
12	A91130168		A130168	1554
13	ABW1100		ABW1100	1103
14	A91130152Y		A130152Y	1058
15	A91130152Z		A130152Z	1135
	ABW1101			

COMMENTS:

FORM IV VOA 1/87 Rev.

8A

VOLATILE INTERNAL STANDARD AREA SUMMARY

Lab Name: MANCHESTER LAB Contract: AGDD3A

Lab Code: _____ Case No.: HWD-12 SAS No.: 1011 SDG No.: RIDGEF

Lab File ID (Standard): AVW1099 Date Analyzed: 04/09/91

Instrument ID: 5100 Time Analyzed: 1038

Matrix:(soil/water) _____ Level:(low/med) _____ Column:(pack/cap) _____

		3 DCB		1		2	
		IS~~1~~3 (~~BCM~~) AREA #	RT	IS~~2~~1 (DFB) AREA #	RT	IS~~3~~2 (CBZ) AREA #	RT
	12 HOUR STD	44100	15.49	106000	7.83	85300	12.35
	UPPER LIMIT	88200		212000		170600	
	LOWER LIMIT	22050		53000		42650	
	EPA SAMPLE NO.						
01	A91130150	47800 *		106000	7.87	85400	12.34
02	A91130152	44300 *		105000	7.87	79600	12.37
03	A91130154	44400 *		104000	7.78	82000	12.34
04	A91130156	41100 *		90600	7.80	72200	12.34
05	A91130158	43800 *		92100	7.77	73800	12.32
06	ABW1099	47200 *		109000	7.88	87400	12.37

IS~~1~~3 (~~BCM~~) = ~~Bromochloromethane~~ DCB 1,4-Dichlorobenzene-d4
IS~~2~~1 (DFB) = 1,4-Difluorobenzene
IS~~3~~2 (CBZ) = Chlorobenzene

UPPER LIMIT = + 100%
of internal standard area.
LOWER LIMIT = - 50%
of internal standard area.

\# Column used to flag internal standard area values with an asterisk

FORM VIII VOA 1/87 Rev.

8A

VOLATILE INTERNAL STANDARD AREA SUMMARY

Lab Name: MANCHESTER LAB Contract: AGDD3A

Lab Code: _____ Case No.: HWD-12 SAS No.: 1011 SDG No.: RIDGEF

Lab File ID (Standard): AVW1100 Date Analyzed: 04/10/91

Instrument ID: 5100 Time Analyzed: 0944

Matrix:(soil/water) _____ Level:(low/med) _____ Column:(pack/cap) _____

		3 DCB		1		2	
		IS~~1~~ (~~BCM~~)		IS~~2~~(DFB)		IS~~3~~(CBZ)	
		AREA #	RT	AREA #	RT	AREA #	RT
	12 HOUR STD	48500	15.49	98600	7.88	79600	12.35
	UPPER LIMIT	97000		197200		159200	
	LOWER LIMIT	24250		49300		39800	
	EPA SAMPLE NO.						
01	A91130160	49900 *		95400	7.87	79700	12.34
02	A91130161	45400 *		103000	7.87	88000	12.34
03	A91130162	54800 *		117000	7.87	93500	12.34
04	A91130164	56700 *		118000	7.77	94600	12.32
05	A91130166	55300 *		110000	7.87	89100	12.32
06	A91130168	55200 *		119000	7.75	93200	12.29
07	ABW1100	57800 *		115000	7.77	95400	12.30

IS~~1~~3 (~~BCM~~ DCB) = ~~Bromochloromethane~~ 1,4-Dichlorobenzene-d4
IS~~2~~1 (DFB) = 1,4-Difluorobenzene
IS~~3~~2 (CBZ) = Chlorobenzene

UPPER LIMIT = + 100% of internal standard area.
LOWER LIMIT = - 50% of internal standard area.

Column used to flag internal standard area values with an asterisk

FORM VIII VOA 1/87 Rev.

8A

VOLATILE INTERNAL STANDARD AREA SUMMARY

Lab Name: MANCHESTER LAB Contract: AGDD3A

Lab Code: _____ Case No.: HWD-12 SAS No.: 1011 SDG No.: RIDGEF

Lab File ID (Standard): AVW1101 Date Analyzed: 04/11/91

Instrument ID: 5100 Time Analyzed: 0946

Matrix:(soil/water) _____ Level:(low/med) _____ Column:(pack/cap) _____

	IS3 (~~BCM~~)		IS1 (DFB)		IS2 (CBZ)	
	AREA #	RT	AREA #	RT	AREA #	RT
12 HOUR STD	47500	15.49	105000	7.82	80500	12.32
UPPER LIMIT	95000		210000		161000	
LOWER LIMIT	23750		52500		40250	
EPA SAMPLE NO.						
01 A91130152Y	46400 *		104000	7.82	80100	12.32
02 A91130152Z	47200 *		100000	7.83	81200	12.32

IS3 (~~BCM~~) = ~~Bromochloromethane~~ 1,4-Dichlorobenzene-d4
IS1 (DFB) = 1,4-Difluorobenzene
IS2 (CBZ) = Chlorobenzene

UPPER LIMIT = + 100% of internal standard area.
LOWER LIMIT = - 50% of internal standard area.

Column used to flag internal standard area values with an asterisk

FORM VIII VOA 1/87 Rev.

Response list; Input file: VZ, 1 ; Output file: VZ, 1

Compound: CI10 1,4-DIFLUOROBENZENE (INTERNAL STANDARD)
Ref. Comp (VZ: 1): CI10 1,4-DIFLUOROBENZENE (INTERNAL STANDARD)
Quantitation mass: 114 Quant. Mass (Ref. Comp.): 114

No.	Date	Time	Area	Area(R)	Amnt (NG)	Amnt(R) (NG)	Resp
1	4/ 9/91	10:38	105543.	105543.	100.000	100.000	1.000
2	4/ 9/91	12:03	109216.	109216.	100.000	100.000	1.000
3	4/ 9/91	12:43	106372.	106372.	100.000	100.000	1.000
4	4/ 9/91	13:21	104772.	104772.	100.000	100.000	1.000
5	4/ 9/91	14:45	90582.	90582.	100.000	100.000	1.000
6	4/ 9/91	14:06	104174.	104174.	100.000	100.000	1.000
7	4/ 9/91	15:25	92098.	92098.	100.000	100.000	1.000

EM=1460

I50%(std): 52772-158314

RESPONSE LIB:VZ,1; MASS: 114 (REF.COMP:VZ,1; MASS: 114)
CMP:CI10 1,4-DIFLUOROBENZENE (INTERNAL STANDARD)
REF:CI10 1,4-DIFLUOROBENZENE (INTERNAL STANDARD)

AREA (AV: 101822.)

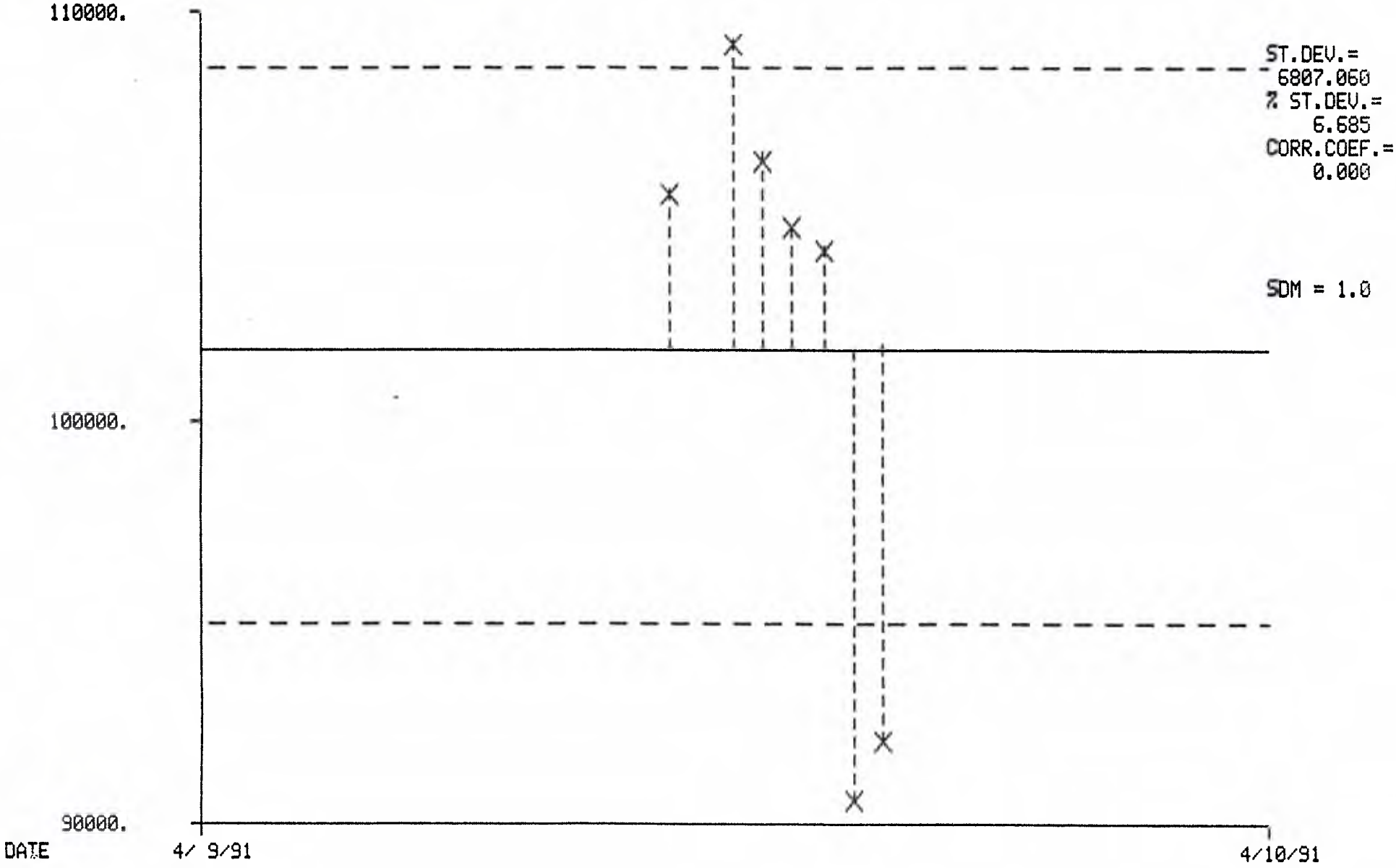

Response list; Input file: VZ, 2 ; Output file: VZ, 2

Compound: CI20 CHLOROBENZENE-D5 (INTERNAL STANDARD)
Ref. Comp (VZ: 2): CI20 CHLOROBENZENE-D5 (INTERNAL STANDARD)
Quantitation mass: 117 Quant. Mass (Ref. Comp.): 117

No.	Date	Time	Area	Area(R)	Amnt (NG)	Amnt(R) (NG)	Resp
1	4/ 9/91	10:38	85337.	85337.	100.000	100.000	1.000
2	4/ 9/91	12:03	87353.	87353.	100.000	100.000	1.000
3	4/ 9/91	12:43	85383.	85383.	100.000	100.000	1.000
4	4/ 9/91	13:21	79638.	79638.	100.000	100.000	1.000
5	4/ 9/91	14:45	72242.	72242.	100.000	100.000	1.000
6	4/ 9/91	14:06	81988.	81988.	100.000	100.000	1.000
7	4/ 9/91	15:25	73841.	73841.	100.000	100.000	1.000

±50%: 42668-128006

RESPONSE LIB:VZ,2; MASS: 117 (REF.COMP:VZ,2; MASS: 117)
CMP:CI20 CHLOROBENZENE-D5 (INTERNAL STANDARD)
REF:CI20 CHLOROBENZENE-D5 (INTERNAL STANDARD)

AREA (AV: 80826.)

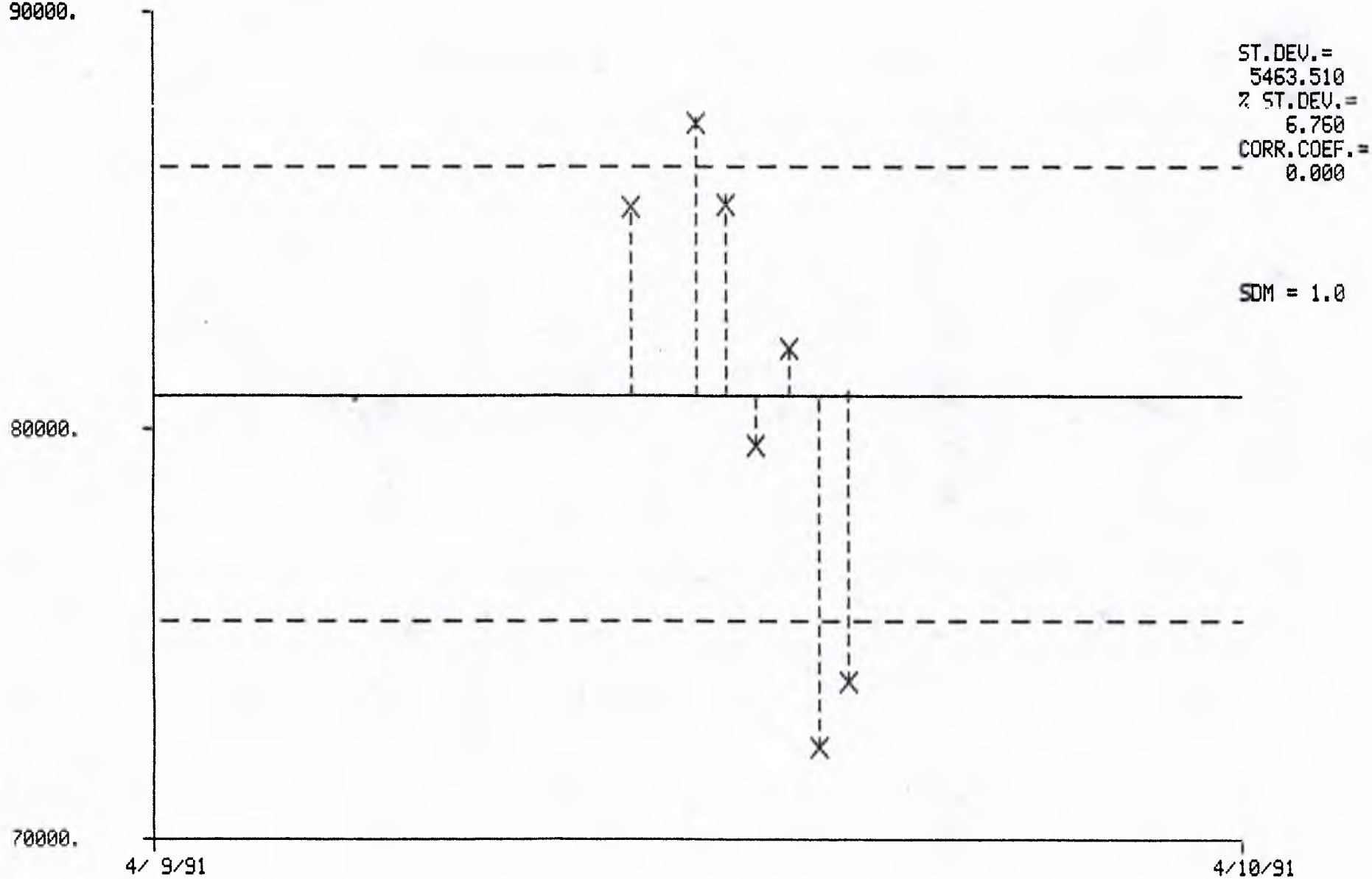

Response list; Input file: VZ, 3 ; Output file: VZ, 3

Compound: CI01 1,4-DICHLOROBENZENE-D4 (INTERNAL STANDARD)
Ref. Comp (VZ: 3): CI01 1,4-DICHLOROBENZENE-D4 (INTERNAL STANDARD)
Quantitation mass: 152 Quant. Mass (Ref. Comp.): 152

No.	Date	Time	Area	Area(R)	Amnt (NG)	Amnt(R) (NG)	Resp
1	4/ 9/91	10:38	44080.	44080.	100.000	100.000	1.000
2	4/ 9/91	12:03	47220.	47220.	100.000	100.000	1.000
3	4/ 9/91	12:43	47754.	47754.	100.000	100.000	1.000
4	4/ 9/91	13:21	44306.	44306.	100.000	100.000	1.000
5	4/ 9/91	14:45	41138.	41138.	100.000	100.000	1.000
6	4/ 9/91	14:06	44444.	44444.	100.000	100.000	1.000
7	4/ 9/91	15:25	43844.	43844.	100.000	100.000	1.000

± 50% 22040-66120

RESPONSE LIB:VZ,3; MASS: 152 (REF.COMP:VZ,3; MASS: 152)
CMP:CI01 1,4-DICHLOROBENZENE-D4 (INTERNAL STANDARD)
REF:CI01 1,4-DICHLOROBENZENE-D4 (INTERNAL STANDARD)

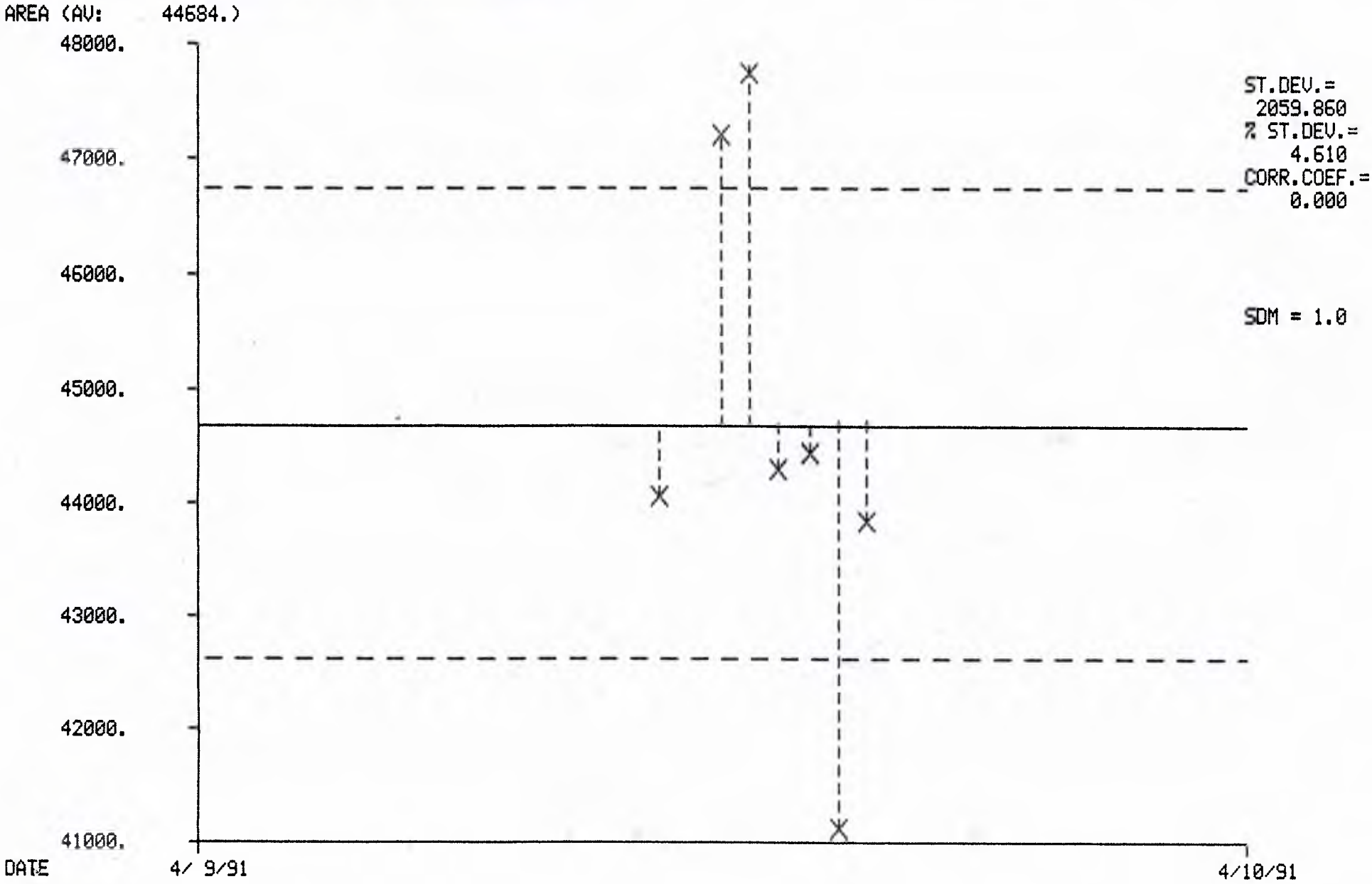

Response list; Input file: VZ, 1 ; Output file: VZ, 1

Compound: CI10 1,4-DIFLUOROBENZENE (INTERNAL STANDARD)
Ref. Comp (VZ: 1): CI10 1,4-DIFLUOROBENZENE (INTERNAL STANDARD)
Quantitation mass: 114 Quant. Mass (Ref. Comp.): 114

No.	Date	Time	Area	Area(R)	Amnt (NG)	Amnt(R) (NG)	Resp
1	4/10/91	9:44	98580.	98580.	100.000	100.000	1.000
2	4/10/91	11:03	114767.	114767.	100.000	100.000	1.000
3	4/10/91	11:42	95412.	95412.	100.000	100.000	1.000
4	4/10/91	13:51	116704.	116704.	100.000	100.000	1.000
5	4/10/91	14:31	117658.	117658.	100.000	100.000	1.000
6	4/10/91	15:12	109919.	109919.	100.000	100.000	1.000
7	4/10/91	15:54	119466.	119466.	100.000	100.000	1.000
8	4/10/91	13:11	110210.	110210.	100.000	100.000	1.000

EM-1460

±50% (Std): 49290-147870

RESPONSE LIB:VZ,1; MASS: 114 (REF.COMP:VZ,1; MASS: 114)
CMP:CI10 1,4-DIFLUOROBENZENE (INTERNAL STANDARD)
REF:CI10 1,4-DIFLUOROBENZENE (INTERNAL STANDARD)

AREA (AV: 110340.)

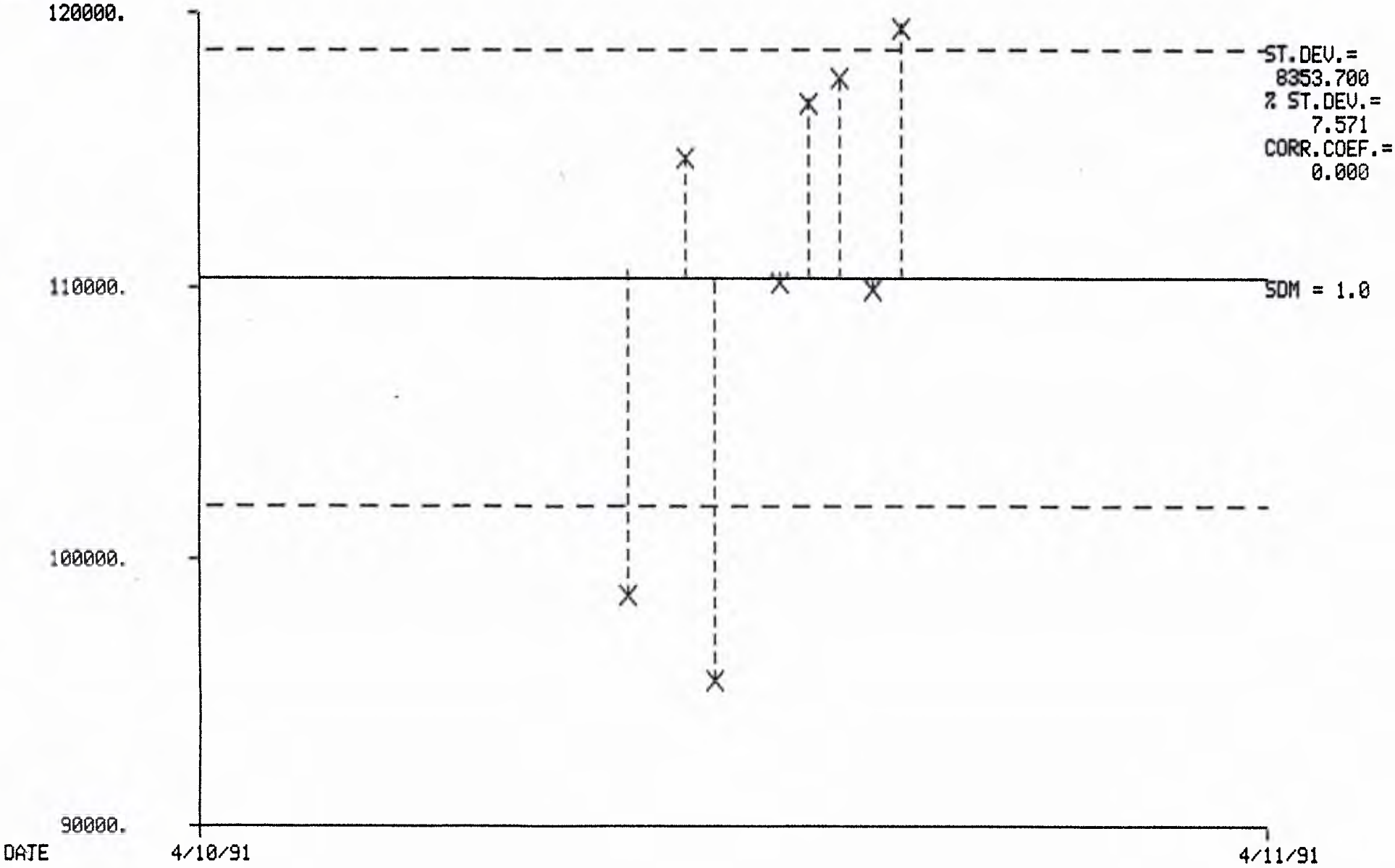

Response list; Input file: VZ, 2 ; Output file: VZ, 2

Compound: CI20 CHLOROBENZENE-D5 (INTERNAL STANDARD)
Ref. Comp (VZ: 2): CI20 CHLOROBENZENE-D5 (INTERNAL STANDARD)
Quantitation mass: 117 Quant. Mass (Ref. Comp.): 117

No.	Date	Time	Area	Area(R)	Amnt (NG)	Amnt(R) (NG)	Resp
1	4/10/91	9:44	79576.	79576.	100.000	100.000	1.000
2	4/10/91	11:03	95417.	95417.	100.000	100.000	1.000
3	4/10/91	11:42	79701.	79701.	100.000	100.000	1.000
4	4/10/91	13:51	93490.	93490.	100.000	100.000	1.000
5	4/10/91	14:31	94550.	94550.	100.000	100.000	1.000
6	4/10/91	15:12	89090.	89090.	100.000	100.000	1.000
7	4/10/91	15:54	93158.	93158.	100.000	100.000	1.000
8	4/10/91	13:11	88464.	88464.	100.000	100.000	1.000

±50%: 39788-119364

RESPONSE LIB:VZ,2; MASS: 117 (REF.COMP:VZ,2; MASS: 117)
CMP:CI20 CHLOROBENZENE-D5 (INTERNAL STANDARD)
REF:CI20 CHLOROBENZENE-D5 (INTERNAL STANDARD)

AREA (AV: 89181.)

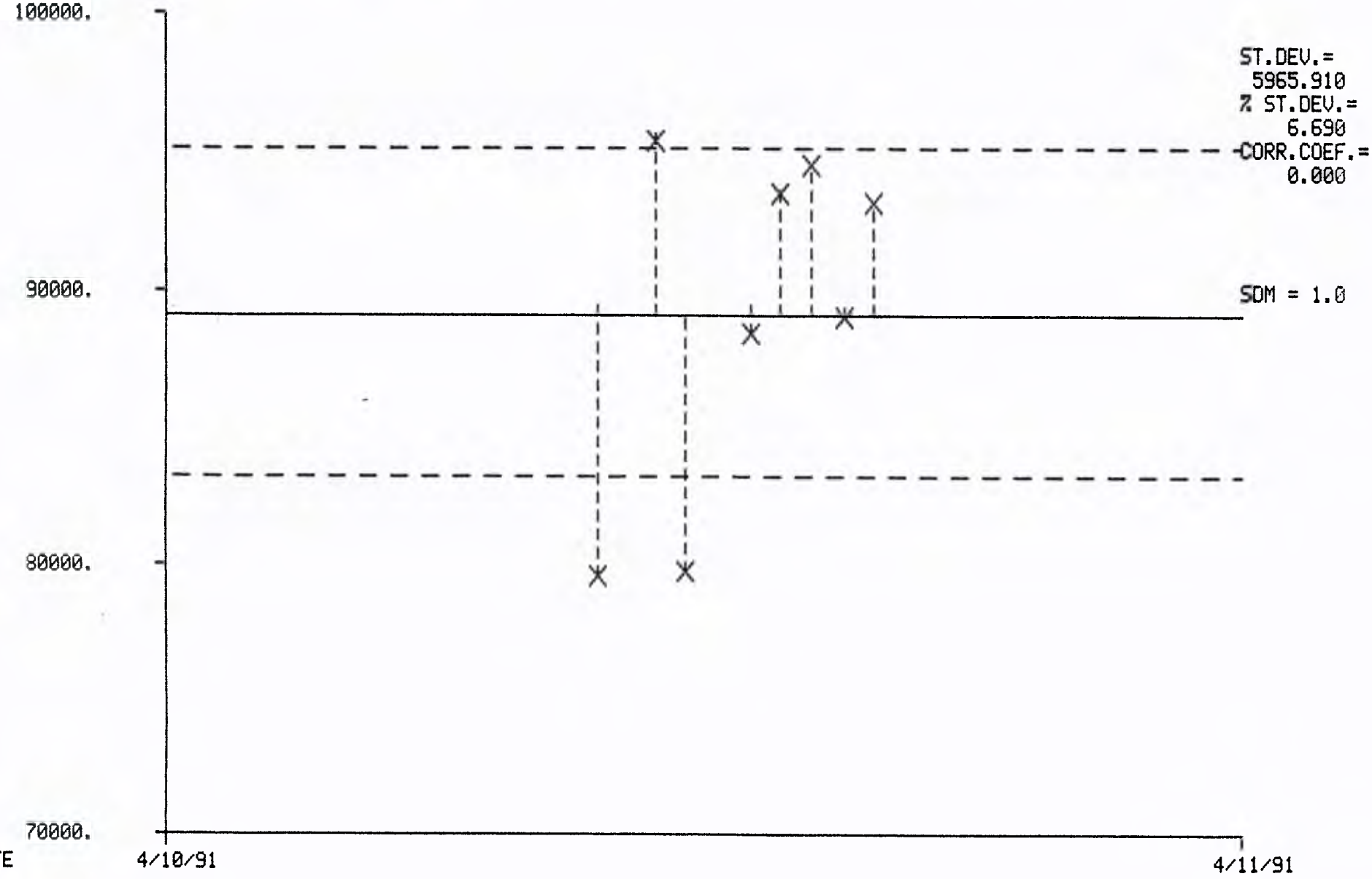

Response list; Input file: VZ, 3 ; Output file: VZ, 3

Compound: CIO1 1,4-DICHLOROBENZENE-D4 (INTERNAL STANDARD)
Ref. Comp (VZ: 3): CIO1 1,4-DICHLOROBENZENE-D4 (INTERNAL STANDARD)
Quantitation mass: 152 Quant. Mass (Ref. Comp.): 152

No.	Date	Time	Area	Area(R)	Amnt (NG)	Amnt(R) (NG)	Resp
1	4/10/91	9:44	48524.	48524.	100.000	100.000	1.000
2	4/10/91	11:03	57798.	57798.	100.000	100.000	1.000
3	4/10/91	11:42	49738.	49738.	100.000	100.000	1.000
4	4/10/91	13:11	45458.	45458.	100.000	100.000	1.000
5	4/10/91	13:51	54796.	54796.	100.000	100.000	1.000
6	4/10/91	14:31	56728.	56728.	100.000	100.000	1.000
7	4/10/91	15:12	55344.	55344.	100.000	100.000	1.000
8	4/10/91	15:54	55186.	55186.	100.000	100.000	1.000

±50%: 24262-72786

RESPONSE LIB:VZ,3; MASS: 152 (REF.COMP:VZ,3; MASS: 152)
CMP:CI01 1,4-DICHLOROBENZENE-D4 (INTERNAL STANDARD)
REF:CI01 1,4-DICHLOROBENZENE-D4 (INTERNAL STANDARD)

AREA (AV: 52946.)

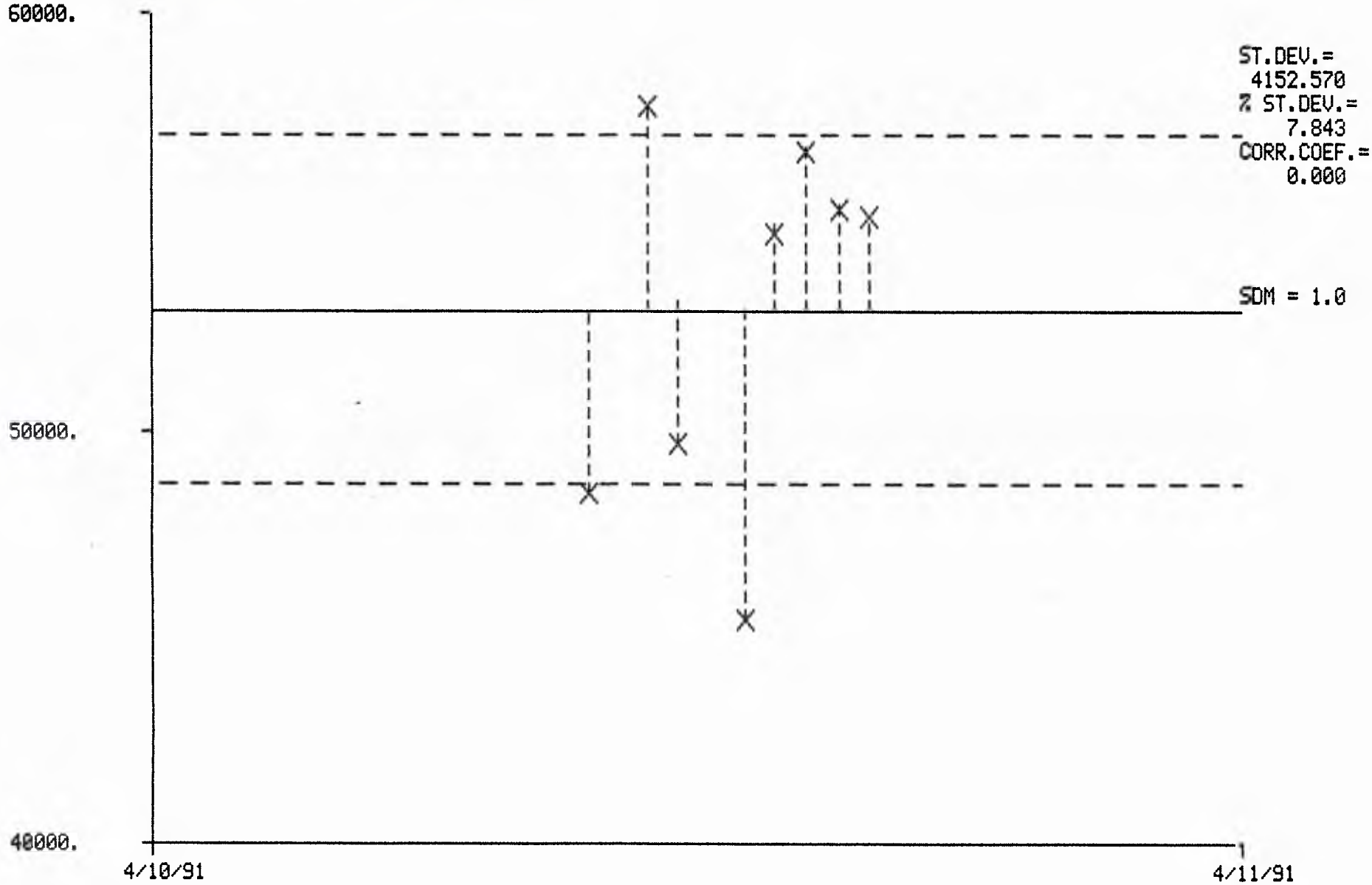

Response list; Input file: VZ, 1 ; Output file: VZ, 1

Compound: CI10 1,4-DIFLUOROBENZENE (INTERNAL STANDARD)
Ref. Comp (VZ: 1): CI10 1,4-DIFLUOROBENZENE (INTERNAL STANDARD)
Quantitation mass: 114 Quant. Mass (Ref. Comp.): 114

No.	Date	Time	Area	Area(R)	Amnt (NG)	Amnt(R) (NG)	Resp
1	4/11/91	9:46	104926.	104926.	100.000	100.000	1.000
2	4/11/91	13:41	100081.	100081.	100.000	100.000	1.000
3	4/11/91	10:58	104218.	104218.	100.000	100.000	1.000
4	4/11/91	11:35	100350.	100350.	100.000	100.000	1.000
5	4/11/91	15:13	98452.	98452.	100.000	100.000	1.000
6	4/11/91	16:00	102018.	102018.	100.000	100.000	1.000
7	4/11/91	14:23	86055.	86055.	100.000	100.000	1.000

EM=1460

I50% (Std): 52463 - 157389

RESPONSE LIB:VZ,1; MASS: 114 (REF.COMP:VZ,1; MASS: 114)
CMP:CI10 1,4-DIFLUOROBENZENE (INTERNAL STANDARD)
REF:CI10 1,4-DIFLUOROBENZENE (INTERNAL STANDARD)

AREA (AV: 99443.)

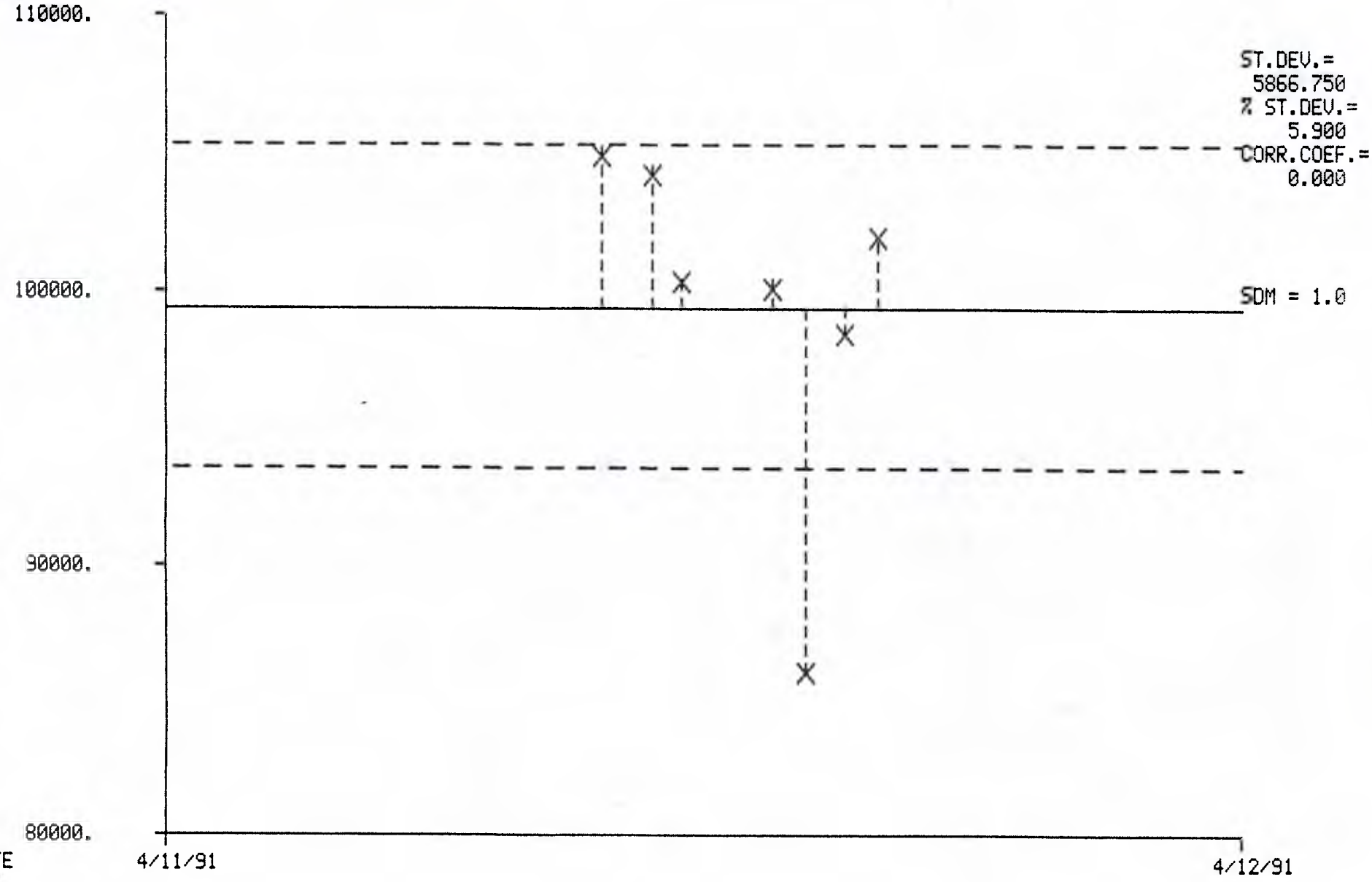

Response list; Input file: VZ, 2 ; Output file: VZ, 2

Compound: CI20 CHLOROBENZENE-D5 (INTERNAL STANDARD)
Ref. Comp (VZ: 2): CI20 CHLOROBENZENE-D5 (INTERNAL STANDARD)
Quantitation mass: 117 Quant. Mass (Ref. Comp.): 117

No.	Date	Time	Area	Area(R)	Amnt (NG)	Amnt(R) (NG)	Resp
1	4/11/91	9:46	80522.	80522.	100.000	100.000	1.000
2	4/11/91	13:41	82542.	82542.	100.000	100.000	1.000
3	4/11/91	10:58	80140.	80140.	100.000	100.000	1.000
4	4/11/91	11:35	81233.	81233.	100.000	100.000	1.000
5	4/11/91	15:13	71124.	71124.	100.000	100.000	1.000
6	4/11/91	16:00	76880.	76880.	100.000	100.000	1.000
7	4/11/91	14:23	63932.	63932.	100.000	100.000	1.000

±50% : 40261-120783

RESPONSE LIB:VZ,2; MASS: 117 (REF.COMP:VZ,2; MASS: 117)
CMP:CI20 CHLOROBENZENE-D5 (INTERNAL STANDARD)
REF:CI20 CHLOROBENZENE-D5 (INTERNAL STANDARD)

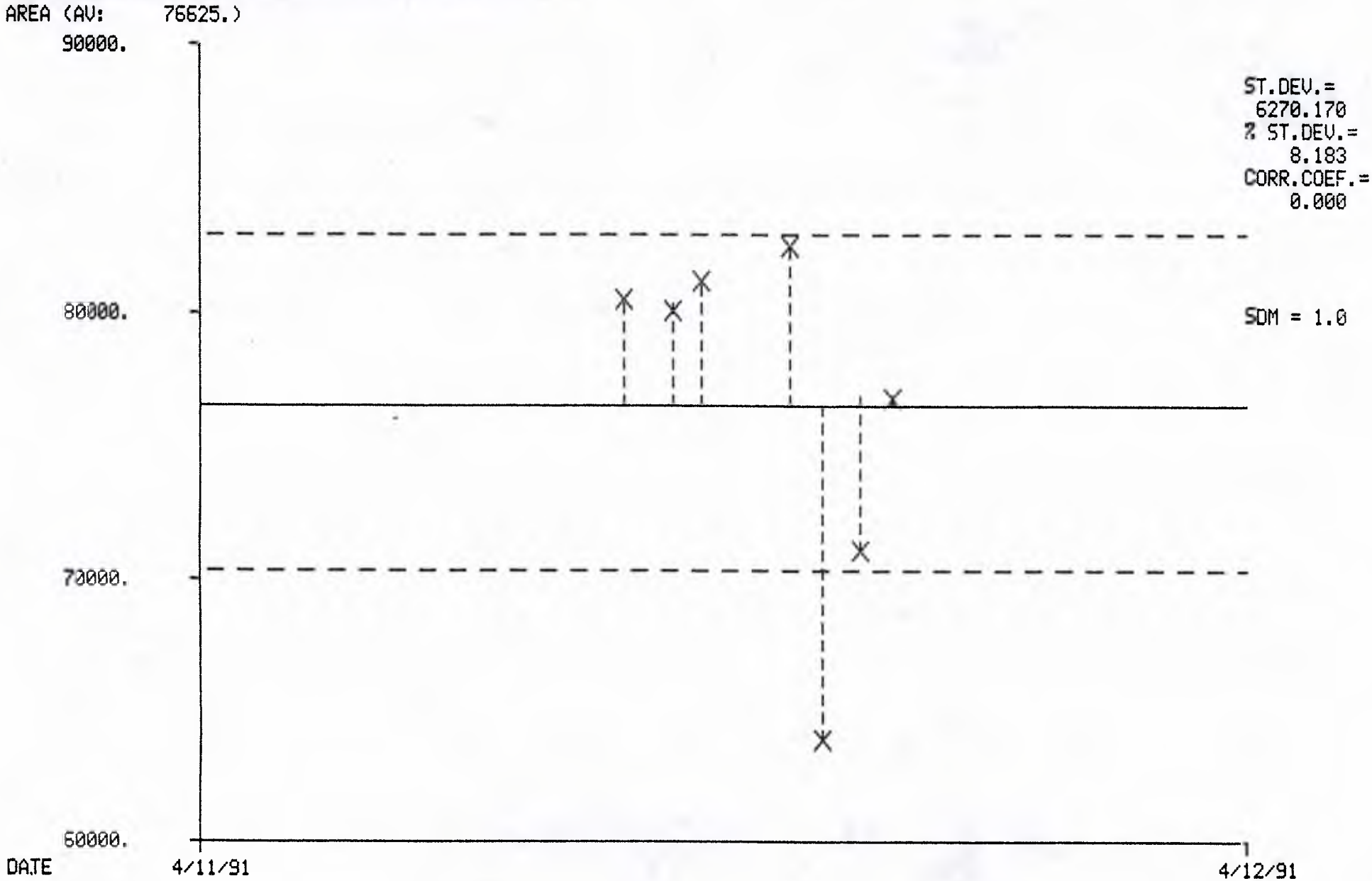

Response list; Input file: VZ, 3 ; Output file: VZ, 3

Compound: CIO1 1,4-DICHLOROBENZENE-D4 (INTERNAL STANDARD)
Ref. Comp (VZ: 3): CIO1 1,4-DICHLOROBENZENE-D4 (INTERNAL STANDARD)
Quantitation mass: 152 Quant. Mass (Ref. Comp.): 152

No.	Date	Time	Area	Area(R)	Amnt (NG)	Amnt(R) (NG)	Resp
1	4/11/91	9:46	47542.	47542.	100.000	100.000	1.000
2	4/11/91	13:41	47038.	47038.	100.000	100.000	1.000
3	4/11/91	10:58	46452.	46452.	100.000	100.000	1.000
4	4/11/91	11:35	47230.	47230.	100.000	100.000	1.000
5	4/11/91	15:13	36190.	36190.	100.000	100.000	1.000
6	4/11/91	16:00	40486.	40486.	100.000	100.000	1.000
7	4/11/91	14:23	31336.	31336.	100.000	100.000	1.000

I50% : 23762-71286

RESPONSE LIB:VZ,3; MASS: 152 (REF.COMP:VZ,3; MASS: 152)
CMP:CI01 1,4-DICHLOROBENZENE-D4 (INTERNAL STANDARD)
REF:CI01 1,4-DICHLOROBENZENE-D4 (INTERNAL STANDARD)

AREA (AV: 42325.)

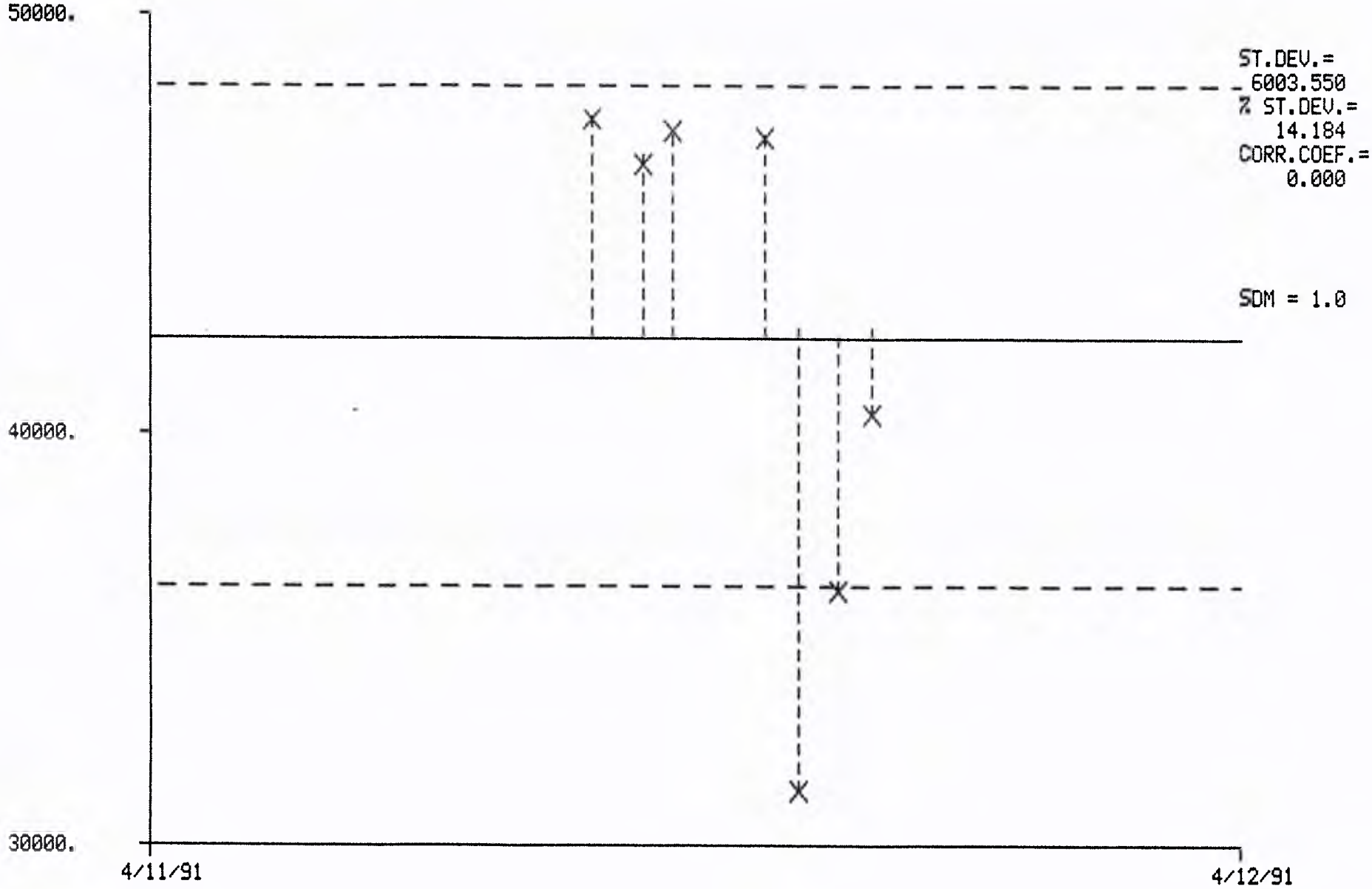

SAMPLE HOLDING TIMES AND DILUTIONS

Laboratory MANCHESTER LAB
Case Number HWD-127A

07/02/91

Sample number	M	L	Rcvd	VOA Anal	VOA Hld	VOA Dil	BNA Extr	BNA Hld	BNA Anal	BNA Hld	BNA Dil	PEST Extr	PEST Hld	PEST Anal	PEST Hld	PEST Dil
A91130150	W	L	03/27	04/09	13	0.200										
A91130152	W	L	03/27	04/09	13	0.200										
A91130154	W	L	03/27	04/09	13	0.200										
A91130156	W	L	03/27	04/09	13	0.200										
A91130158	W	L	03/27	04/09	13	0.200										
A91130160	W	L	03/27	04/10	14	0.200										
A91130161	W	L	03/28	04/10	13	0.200										
A91130162	W	L	03/28	04/10	13	0.200										
A91130164	W	L	03/28	04/10	13	0.200										
A91130166	W	L	03/28	04/10	13	0.200										
A91130168	W	L	03/28	04/10	13	0.200										
A91130152Y	W	L	03/27	04/11	15	0.200										
A91130152Z	W	L	03/27	04/11	15	0.200										

} Spikes - no data qualifiers required

CROSS-REFERENCE OF FILES BY PERFORMANCE TUNE AND DATE ANALYZED

CASE NO HWD-127A CONTRACT AGDD3A
SAS NO 1011 CUSTOMER EPA-BAILEY REPORTED 07/02/91 16:17

TUNE	SAMPLE ID	LAB SAMP ID	FILE NAME	INST	ANALYZED
ABF1099	A91130150		A130150	5100	04/09/91 12:43
	A91130152		A130152	5100	04/09/91 13:21
	A91130154		A130154	5100	04/09/91 14:06
	A91130156		A130156	5100	04/09/91 14:45
	A91130158		A130158	5100	04/09/91 15:25
	ABW1099		ABW1099	5100	04/09/91 12:03
ABF1100	A91130160		A130160	5100	04/10/91 11:42
	A91130161		A130161	5100	04/10/91 13:11
	A91130162		A130162	5100	04/10/91 13:51
	A91130164		A130164	5100	04/10/91 14:31
	A91130166		A130166	5100	04/10/91 15:12
	A91130168		A130168	5100	04/10/91 15:54
	ABW1100		ABW1100	5100	04/10/91 11:03
ABF1101	A91130152Y		A130152Y	5100	04/11/91 10:58
	A91130152Z		A130152Z	5100	04/11/91 11:35

INITIAL CALIBRATION DATA
VOLATILE HSL COMPOUNDS

Min AVE RF for CCC Varies Max %RSD for CCC is 30%

CASE NO AVA1091 LABORATORY MANCHESTER LAB CONTRACT A1091AV
SAS NO REPORTED 04/02/91 14:53 CUSTOMER EPA-10

LAB SAMP ID SAMPLE ID AVA1091
LAB QC ID TYPE IC-AVE
DATA RELEASE AUTHORIZED BY

FILE NAME A1091AV RECEIVED METHOD EPA
TUNE ABF1091 EXTRACTED 04/01/91 13:21 FRACTION VOA
STANDARD A1091AV ANALYZED 04/01/91 16:35 INST 5100
BLANK VERIFIED ANALYST SVP
TAPE/POS BOTTLE

% MOISTURE pH LEVEL
(DECANTED) CLEANUP MATRIX
DIL FACTOR 1.00 EXTRACT METHOD UNITS

SAMPLE: AVA1091, STANDARD, 10NG MOST CPDS/10ML+IS+SS
CONDITIONS: DB-624,30M,0.32MM, 1.8U, 10CC/2MIN,10-102/8C, 102-180/60C & HOL
Average of 6 files.
AVA1091, AVB1091, AVC1091, AVD1091, AVE1091, AVF1091
NG: 10 20 50 100 200 400

CODE	CAS NO	COMPOUND	TYPES	RESP FAC	STD DEV	% SD	FLGS
C010	74-87-3	Chloromethane		0.478 ~~0.417~~	0.055 ~~0.157~~	~~30~~ 11.5	
C011	75-71-8	Dichlorodifluoromethane		1.160 ~~0.974~~	0.210 ~~0.493~~	~~51~~ ~~15~~ 18.1	
C015	74-83-9	Bromomethane	C	0.257	0.044	17	
C020	75-01-4	Vinyl Chloride	C	0.474 ~~0.412~~	0.044 ~~0.157~~	~~38~~ 9.2	
C025	75-00-3	Chloroethane		0.238	0.020	8	
C026	75-69-4	Trichlorofluoromethane		0.494	0.041	8	
C030	75-09-2	Methylene Chloride		0.398	0.058	15	
C035	67-64-1	Acetone		0.168 ~~0.194~~	0.036 ~~0.049~~	~~25~~ 21.3	
C040	75-15-0	Carbon Disulfide		0.898	0.058	6	
C045	75-35-4	1,1-Dichloroethene	C	0.270	0.055	20	
C050	75-34-3	1,1-Dichloroethane	C	0.663	0.030	5	
C055	156-60-5	Trans-1,2-Dichloroethene		0.345	0.020	6	
C056	156-59-2	Cis-1,2-Dichloroethene		0.366	0.051	14	
C057	590-20-7	2,2-Dichloropropane		0.452	0.032	7	
C058	74-97-5	Bromochloromethane	C	0.160	0.020	12	
C060	67-66-3	Chloroform	C	0.619	0.060	10	
C065	107-06-2	1,2-Dichloroethane	C	0.416	0.025	6	
C110	78-93-3	2-Butanone		0.198 ~~0.211~~	0.006 ~~0.022~~	~~10~~ 3.2	
C115	71-55-6	1,1,1-Trichloroethane	C	0.569	0.037	7	
C120	56-23-5	Carbon Tetrachloride	C	0.483	0.048	10	
C121	563-58-6	1,1-Dichloropropene		0.520	0.055	11	
C130	75-27-4	Bromodichloromethane	C	0.563	0.056	10	
C140	78-87-5	1,2-Dichloropropane		0.436	0.030	7	

INITIAL CALIBRATION DATA
VOLATILE HSL COMPOUNDS

Min AVE RF for CCC Varies Max %RSD for CCC is 30%

CASE NO AVA1091 LABORATORY MANCHESTER LAB CONTRACT A1091AV
SAS NO REPORTED 04/02/91 14:53 CUSTOMER EPA-10

CODE	CAS NO	COMPOUND	TYPES	RESP FAC	STD DEV	% SD	FLGS
C141	74-95-3	Dibromomethane		0.274	0.024	9	
C145	10061-02-6	Trans-1,3-Dichloropropene	C	0.481	0.073	15	
C150	79-01-6	Trichloroethene	C	0.384	0.052	14	
C155	124-48-1	Dibromochloromethane	C	0.375	0.069	18	
C156	106-93-4	1,2-Dibromoethane	C	0.336	0.053	16	
C160	79-00-5	1,1,2-Trichloroethane	C	0.317	0.036	11	
C161	142-28-9	1,3-Dichloropropane		0.610	0.054	9	
C165	71-43-2	Benzene	C	1.596	0.118	7	
C170	10061-01-5	cis-1,3-Dichloropropene	C	0.598	0.071	12	
C180	75-25-2	Bromoform	C	0.237	0.041	17	
C210	591-78-6	2-Hexanone		0.323	0.031	10	
C215	108-10-1	4-Methyl-2-Pentanone		0.455	0.018	4	
C220	127-18-4	Tetrachloroethene	C	0.303	0.069	23	
C225	79-34-5	1,1,2,2-Tetrachloroethane	C	0.550	0.105	19	
C226	630-20-6	1,1,1,2-Tetrachloroethane		0.353	0.079	22	
C230	108-88-3	Toluene	C	1.768	0.233	13	
C235	108-90-7	Chlorobenzene	C	1.069	0.171	16	
C240	100-41-4	Ethylbenzene	C	2.049	0.491	24	
C245	100-42-5	Styrene	C	1.132	0.315	28	
C246	108-86-1	Bromobenzene		0.471	0.104	22	
C247	96-18-4	1,2,3-Trichloropropane		0.430	0.054	13	
C248	95-49-8	2-Chlorotoluene		0.498	0.069	14	
C249	106-43-4	4-Chlorotoluene		0.580	0.136	23	
C250	1330-20-7	Total Xylenes	C	0.605	0.139	23	
C251	95-63-6	1,2,4-Trimethylbenzene		2.205	0.467	21	
C252	98-06-6	Tert-Butylbenzene		1.857	0.427	23	
C253	108-67-8	1,3,5-Trimethylbenzene		2.355	0.518	22	
C254	135-98-8	Sec-Butylbenzene		2.967	0.618	21	
C255	99-87-6	p-Isopropyltoluene		2.808	0.365	13	
C256	104-51-8	Butylbenzene		2.974	0.610	21	
C257	96-12-8	1,2-Dibromo-3-chloropropane		0.087	0.006	7	
C258	87-61-6	1,2,3-Trichlorobenzene		0.595	0.125	21	
C259	98-82-8	Isopropylbenzene		2.289	0.519	23	
C260	103-65-1	Propylbenzene		0.562	0.101	18	
C261		Total Xylenes	C	0.773	0.220	28	
C336	541-73-1	1,3-Dichlorobenzene	C	1.039	0.255	25	
C341	106-46-7	1,4-Dichlorobenzene	C	1.278	0.208	16	
C351	95-50-1	1,2-Dichlorobenzene	C	1.080	0.266	25	
C446	120-82-1	1,2,4-Trichlorobenzene		0.728	0.168	23	
C451	91-20-3	Naphthalene		1.303	0.265	20	
C461	87-68-3	Hexachlorobutadiene		0.384	0.083	22	

INITIAL CALIBRATION DATA
VOLATILE HSL COMPOUNDS

Min AVE RF for CCC Varies Max %RSD for CCC is 30%

CASE NO	AVA1091	LABORATORY	MANCHESTER LAB	CONTRACT	A1091AV
SAS NO		REPORTED	04/02/91 14:43	CUSTOMER	EPA-10
LEVEL		MATRIX		UNITS	

CODE	COMPOUND	TYPES	LOW LIMIT	HIGH LIMIT
C010	Chloromethane	V	0.300	
C011	Dichlorodifluoromethane	V	0.300	
C015	Bromomethane	CV		
C020	Vinyl Chloride	CV		
C025	Chloroethane	V		
C026	Trichlorofluoromethane	V		
C030	Methylene Chloride	V		
C035	Acetone	V		
C040	Carbon Disulfide	V		

RESPONSE FACTORS BY COMPOUND CODE

SAMPLE ID	FILE NAME	C010	C011	C015	C020	C025	C026	C030	C035	C040
AVA1091	AVA1091	~~0.112~~	~~0.044~~	0.183	~~0.103~~	0.262	0.463	0.484	~~0.240~~	0.947
AVB1091	AVB1091	0.388	0.808	0.223	0.405	0.201	0.473	0.440	~~0.253~~	0.919
AVC1091	AVC1091	0.519	1.307	0.279	0.511	0.239	0.553	0.412	0.215	0.950
AVD1091	AVD1091	0.496	1.219	0.283	0.492	0.247	0.541	0.376	0.175	0.908
AVE1091	AVE1091	0.520	1.323	0.300	0.505	0.240	0.474	0.352	0.151	0.869
AVD1091	AVF1091	0.465	1.143	0.272	0.459	0.241	0.463	0.327	0.132	0.795
		0.478± 0.055	1.160± 0.210		0.474± 0.044				0.168± 0.036	

CODE	COMPOUND	TYPES	LOW LIMIT	HIGH LIMIT
C045	1,1-Dichloroethene	CV		
C050	1,1-Dichloroethane	CV	0.300	
C055	Trans-1,2-Dichloroethene	V		
C056	Cis-1,2-Dichloroethene	V		
C057	2,2-Dichloropropane	V		
C058	Bromochloromethane	CV		
C060	Chloroform	CV		
C065	1,2-Dichloroethane	CV		
C110	2-Butanone	V		

RESPONSE FACTORS BY COMPOUND CODE

SAMPLE ID	FILE NAME	C045	C050	C055	C056	C057	C058	C060	C065	C110
AVA1091	AVA1091	0.281	0.610	0.308	0.281	0.396	0.132	0.531	0.385	~~0.240~~
AVB1091	AVB1091	0.273	0.667	0.341	0.342	0.439	0.142	0.578	0.392	~~0.236~~
AVC1091	AVC1091	0.308	0.673	0.354	0.358	0.449	0.158	0.597	0.448	0.203
AVD1091	AVD1091	0.311	0.695	0.365	0.394	0.470	0.167	0.657	0.442	0.203
AVE1091	AVE1091	0.283	0.681	0.351	0.409	0.473	0.177	0.668	0.416	0.193
AVD1091	AVF1091	0.161	0.654	0.353	0.415	0.486	0.185	0.683	0.415	0.191
										0.198± 0.006

CODE	COMPOUND	TYPES	LOW LIMIT	HIGH LIMIT
C115	1,1,1-Trichloroethane	CV		
C120	Carbon Tetrachloride	CV		
C121	1,1-Dichloropropene	V		
C130	Bromodichloromethane	CV		

INITIAL CALIBRATION DATA
VOLATILE HSL COMPOUNDS

Min AVE RF for CCC Varies Max %RSD for CCC is 30%

CASE NO	AVA1091	LABORATORY	MANCHESTER LAB	CONTRACT	A1091AV
SAS NO		REPORTED	04/02/91 14:43	CUSTOMER	EPA-10
LEVEL		MATRIX		UNITS	

CODE	COMPOUND	TYPES	LOW LIMIT	HIGH LIMIT
C140	1,2-Dichloropropane	V		
C141	Dibromomethane	V		
C145	Trans-1,3-Dichloropropene	CV		
C150	Trichloroethene	CV		
C155	Dibromochloromethane	CV		

RESPONSE FACTORS BY COMPOUND CODE

SAMPLE ID	FILE NAME	C115	C120	C121	C130	C140	C141	C145	C150	C15
AVA1091	AVA1091	0.501	0.407	0.424	0.464	0.385	0.232	0.374	0.323	0.27
AVB1091	AVB1091	0.559	0.457	0.506	0.537	0.420	0.263	0.418	0.345	0.31
AVC1091	AVC1091	0.567	0.472	0.500	0.564	0.435	0.274	0.469	0.357	0.35
AVD1091	AVD1091	0.605	0.511	0.566	0.603	0.465	0.301	0.528	0.399	0.41
AVE1091	AVE1091	0.588	0.506	0.560	0.602	0.457	0.287	0.546	0.422	0.43
AVD1091	AVF1091	0.594	0.544	0.561	0.607	0.455	0.286	0.550	0.460	0.45

CODE	COMPOUND	TYPES	LOW LIMIT	HIGH LIMIT
C156	1,2-Dibromoethane	CV		
C160	1,1,2-Trichloroethane	CV		
C161	1,3-Dichloropropane	V		
C165	Benzene	CV		
C170	cis-1,3-Dichloropropene	CV		
C180	Bromoform	CV	0.250	
C210	2-Hexanone	V		
C215	4-Methyl-2-Pentanone	V		
C220	Tetrachloroethene	CV		

RESPONSE FACTORS BY COMPOUND CODE

SAMPLE ID	FILE NAME	C156	C160	C161	C165	C170	C180	C210	C215	C22
AVA1091	AVA1091	0.257	0.264	0.539	1.436	0.500	0.181	0.281	0.435	0.23
AVB1091	AVB1091	0.298	0.292	0.553	1.500	0.534	0.212	0.290	0.442	0.24
AVC1091	AVC1091	0.325	0.305	0.603	1.545	0.577	0.221	0.346	0.464	0.26
AVD1091	AVD1091	0.369	0.342	0.665	1.728	0.642	0.257	0.356	0.478	0.32
AVE1091	AVE1091	0.376	0.350	0.650	1.691	0.662	0.256	0.340	0.471	0.34
AVD1091	AVF1091	0.394	0.349	0.650	1.675	0.670	0.296	0.324	0.439	0.41

CODE	COMPOUND	TYPES	LOW LIMIT	HIGH LIMIT
C225	1,1,2,2-Tetrachloroethane	CV	0.300	
C226	1,1,1,2-Tetrachloroethane	V	0.300	
C230	Toluene	CV		
C235	Chlorobenzene	CV	0.300	
C240	Ethylbenzene	CV		
C245	Styrene	CV		
C246	Bromobenzene	V		
C247	1,2,3-Trichloropropane	V		

INITIAL CALIBRATION DATA
VOLATILE HSL COMPOUNDS

Min AVE RF for CCC Varies Max %RSD for CCC is 30%

CASE NO AVA1091
SAS NO
LEVEL

LABORATORY MANCHESTER LAB
REPORTED 04/02/91 14:43
MATRIX

CONTRACT A1091AV
CUSTOMER EPA-10
UNITS

CODE	COMPOUND	TYPES	LOW LIMIT	HIGH LIMIT
C248	2-Chlorotoluene	V		

RESPONSE FACTORS BY COMPOUND CODE

SAMPLE ID	FILE NAME	C225	C226	C230	C235	C240	C245	C246	C247	C248
AVA1091	AVA1091	0.409	0.258	1.475	0.861	1.481	0.729	0.358	0.357	0.483
AVB1091	AVB1091	0.465	0.288	1.591	0.938	1.620	0.873	0.389	0.376	0.413
AVC1091	AVC1091	0.513	0.318	1.637	0.982	1.830	1.014	0.419	0.425	0.446
AVD1091	AVD1091	0.597	0.375	1.897	1.141	2.213	1.238	0.506	0.475	0.516
AVE1091	AVE1091	0.634	0.412	1.939	1.180	2.390	1.391	0.513	0.462	0.524
AVD1091	AVF1091	0.681	0.466	2.069	1.314	2.761	1.550	0.640	0.485	0.609

CODE	COMPOUND	TYPES	LOW LIMIT	HIGH LIMIT
C249	4-Chlorotoluene	V		
C250	Total Xylenes	CV		
C251	1,2,4-Trimethylbenzene	V		
C252	Tert-Butylbenzene	V		
C253	1,3,5-Trimethylbenzene	V		
C254	Sec-Butylbenzene	V		
C255	p-Isopropyltoluene	V		
C256	Butylbenzene	V		
C257	1,2-Dibromo-3-chloropropane	V		

RESPONSE FACTORS BY COMPOUND CODE

SAMPLE ID	FILE NAME	C249	C250	C251	C252	C253	C254	C255	C256	C257
AVA1091	AVA1091	0.415	0.435	1.594	1.284	1.650	2.180	2.309	2.121	0.090
AVB1091	AVB1091	0.436	0.483	1.776	1.598	1.878	2.395	2.478	2.442	0.087
AVC1091	AVC1091	0.543	0.552	2.063	1.629	2.210	2.725	2.725	2.802	0.089
AVD1091	AVD1091	0.659	0.656	2.469	1.971	2.707	3.352	3.226	3.450	0.096
AVE1091	AVE1091	0.693	0.711	2.553	2.362	2.843	3.474	3.102	3.569	0.080
AVD1091	AVF1091	0.734	0.794	2.773	2.299	2.840	3.675	3.010	3.462	0.082

CODE	COMPOUND	TYPES	LOW LIMIT	HIGH LIMIT
C258	1,2,3-Trichlorobenzene	V		
C259	Isopropylbenzene	V		
C260	Propylbenzene	V		
C261	Total Xylenes	CV		
C336	1,3-Dichlorobenzene	CV		
C341	1,4-Dichlorobenzene	CV		
C351	1,2-Dichlorobenzene	CV		
C446	1,2,4-Trichlorobenzene	V		
C451	Naphthalene	V		

INITIAL CALIBRATION DATA
VOLATILE HSL COMPOUNDS

Min AVE RF for CCC Varies Max %RSD for CCC is 30%

CASE NO AVA1091 LABORATORY MANCHESTER LAB CONTRACT A1091AV
SAS NO REPORTED 04/02/91 14:43 CUSTOMER EPA-10
LEVEL MATRIX UNITS

RESPONSE FACTORS BY COMPOUND CODE

SAMPLE ID	FILE NAME	C258	C259	C260	C261	C336	C341	C351	C446	C451
AVA1091	AVA1091	0.477	1.691	0.420	0.501	0.741	1.005	0.741	0.557	1.075
AVB1091	AVB1091	0.474	1.806	0.495	0.580	0.806	1.097	0.818	0.552	1.046
AVC1091	AVC1091	0.515	2.053	0.527	0.691	0.927	1.194	0.996	0.621	1.124
AVD1091	AVD1091	0.646	2.558	0.615	0.847	1.129	1.410	1.251	0.865	1.387
AVE1091	AVE1091	0.682	2.615	0.616	0.953	1.243	1.472	1.357	0.874	1.476
AVD1091	AVF1091	0.776	3.011	0.702	1.067	1.386	1.493	1.317	0.898	1.709

CODE	COMPOUND	TYPES	LOW LIMIT	HIGH LIMIT
C461	Hexachlorobutadiene	V		

RESPONSE FACTORS BY COMPOUND CODE

SAMPLE ID	FILE NAME	C461
AVA1091	AVA1091	0.309
AVB1091	AVB1091	0.295
AVC1091	AVC1091	0.324
AVD1091	AVD1091	0.462
AVE1091	AVE1091	0.444
AVD1091	AVF1091	0.471

Notes and summary data for this report.
Response Factor (number is the amount of ug/L)
AVE RF - Average Response Factor
%RSD - - Percent Relative Standard Deviation
CCC - - Calibration Check Compounds (*)
(1) - - Minimum AVE RF for Bromoform is 0.250

Form VI

CONTINUING CALIBRATION CHECK
VOLATILE HSL COMPOUNDS

Case No: AVW1099 Region: EPA-10 Calibration Date: 04/09/91
Contractor: MANCHESTER LAB Time: 10:38
Contract No: A1091AV Laboratory ID: AVW1099
Instrument ID: 5100 Initial Call. Date: 04/01/91

Minimum RF for CCC Varies 0.1-0.6. Maximum %D for CCC is 30%

Compound	AVE RF	RF(50)	% D	CCC	SPCC
Chloromethane	0.417	0.584	-40.0	—	
Dichlorodifluoromethane	0.974	0.612	37.2	—	
Bromomethane	0.257	0.242	5.8		*
Vinyl Chloride	0.412	0.584	-41.7	—	*
Chloroethane	0.238	0.327	-37.4	—	
Trichlorofluoromethane	0.494	0.437	11.5		
Methylene Chloride	0.398	0.574	-44.2	—	
Acetone	0.194	0.155	20.1		
Carbon Disulfide	0.898	1.144	-27.4	—	
1,1-Dichloroethene	0.270	0.371	-37.4	—	*
1,1-Dichloroethane	0.663	0.999	-50.7	—	*
Trans-1,2-Dichloroethene	0.345	0.376	-9.0		
Cis-1,2-Dichloroethene	0.366	0.429	-17.2		
2,2-Dichloropropane	0.452	0.503	-11.3		
Bromochloromethane	0.160	0.170	-6.2		*
Chloroform	0.619	0.841	-35.9	—	*
1,2-Dichloroethane	0.416	0.593	-42.5	—	*
2-Butanone	0.211	0.218	-3.3		
1,1,1-Trichloroethane	0.569	0.671	-17.9		*
Carbon Tetrachloride	0.483	0.509	-5.4		*
1,1-Dichloropropene	0.520	0.775	-49.0	—	
Bromodichloromethane	0.563	0.815	-44.8	—	*
1,2-Dichloropropane	0.436	0.767	-75.9	—	
Dibromomethane	0.274	0.330	-20.4		
Trans-1,3-Dichloropropene	0.481	0.712	-48.0	—	*
Trichloroethene	0.384	0.439	-14.3		*
Dibromochloromethane	0.375	0.420	-12.0		*
1,2-Dibromoethane	0.336	0.362	-7.7		*
1,1,2-Trichloroethane	0.317	0.371	-17.0		*
1,3-Dichloropropane	0.610	0.866	-42.0	—	
Benzene	1.596	2.309	-44.7	—	*
cis-1,3-Dichloropropene	0.598	0.911	-52.3	—	*
Bromoform	0.237	0.433	-82.7	—	*
2-Hexanone	0.323	0.394	-22.0		
4-Methyl-2-Pentanone	0.455	0.549	-20.7		
Tetrachloroethene	0.303	0.335	-10.6		*
1,1,2,2-Tetrachloroethane	0.550	0.623	-13.3		*
1,1,1,2-Tetrachloroethane	0.353	0.408	-15.6		
Toluene	1.768	2.228	-26.0	—	*
Chlorobenzene	1.069	1.150	-7.6		*
Ethylbenzene	2.049	2.481	-21.1		*
Styrene	1.132	1.156	-2.1		*
Bromobenzene	0.471	0.796	-69.0	—	
1,2,3-Trichloropropane	0.430	0.875	-103.5	—	
2-Chlorotoluene	0.498	0.819	-64.5	—	
4-Chlorotoluene	0.580	0.799	-37.8	—	
Total Xylenes	0.605	0.673	-11.2		*
1,2,4-Trimethylbenzene	2.205	2.924	-32.6	—	
Tert-Butylbenzene	1.857	2.977	-60.3	—	

34

CONTINUING CALIBRATION CHECK
VOLATILE HSL COMPOUNDS

Case No: AVW1099 Region: EPA-10 Calibration Date: 04/09/91
Contractor: MANCHESTER LAB Time: 10:38
Contract No: A1091AV Laboratory ID: AVW1099
Instrument ID: 5100 Initial Cali. Date: 04/01/91

Minimum RF for CCC Varies 0.1-0.6. Maximum %D for CCC is 30%

Compound	AVE RF	RF(50)	% D	CCC	SPCC
1,3,5-Trimethylbenzene	2.355	3.246	-37.8	—	
Sec-Butylbenzene	2.967	4.215	-42.1	—	
p-Isopropyltoluene	2.808	3.067	-9.2		
Butylbenzene	2.974	3.512	-18.1		
1,2-Dibromo-3-chloropropane .	0.087	0.148	-70.1	—	
1,2,3-Trichlorobenzene	0.595	0.564	5.2		
Isopropylbenzene	2.289	3.914	-71.0	—	
Propylbenzene	0.562	0.934	-66.2	—	
Total Xylenes	0.773	0.710	8.2		*
1,3-Dichlorobenzene	1.039	1.532	-47.4	—	*
1,4-Dichlorobenzene	1.278	1.554	-21.6		*
1,2-Dichlorobenzene	1.080	1.456	-34.8	—	*
1,2,4-Trichlorobenzene	0.728	0.751	-3.2		
Naphthalene	1.303	0.830	36.3	—	
Hexachlorobutadiene	0.384	0.508	-32.3	—	

RF(50) - Response Factor from daily standard file at 50 ug/l
AVE RF - Average Response Factor from initial calibration Form VI
%D - - - Percent Difference
CCC - - Calibration Check Compounds (*)
SPCC - - System Performance Check Compounds (**)
(1) - - Mininum RF for Bromoform is 0.250

34

Form VII

CONTINUING CALIBRATION CHECK
VOLATILE HSL COMPOUNDS

Case No: AVW110Ø Region: EPA-1Ø Calibration Date: Ø4/1Ø/91
Contractor: MANCHESTER LAB Time: Ø9:44
Contract No: A1Ø91AV Laboratory ID: AVW11ØØ
Instrument ID: 51ØØ Initial Call. Date: Ø4/Ø1/91

Minimum RF for CCC Varies Ø.1-Ø.6. Maximum %D for CCC is 3Ø%

Compound	AVE RF	RF(5Ø)	% D	CCC	SPCC
Chloromethane	Ø.417	Ø.677	-62.4		
Dichlorodifluoromethane	Ø.974	1.Ø31	-5.9		
Bromomethane	Ø.257	Ø.267	-3.9	*	
Vinyl Chloride	Ø.412	Ø.647	-57.Ø	*	
Chloroethane	Ø.238	Ø.374	-57.1		
Trichlorofluoromethane	Ø.494	Ø.464	6.1		
Methylene Chloride	Ø.398	Ø.554	-39.2		
Acetone	Ø.194	Ø.2Ø2	-4.1		
Carbon Disulfide	Ø.898	1.348	-5Ø.1		
1,1-Dichloroethene	Ø.27Ø	Ø.382	-41.5	*	
1,1-Dichloroethane	Ø.663	Ø.961	-44.9	*	
Trans-1,2-Dichloroethene	Ø.345	Ø.421	-22.Ø		
Cis-1,2-Dichloroethene	Ø.366	Ø.421	-15.Ø		
2,2-Dichloropropane	Ø.452	Ø.53Ø	-17.3		
Bromochloromethane	Ø.16Ø	Ø.166	-3.8	*	
Chloroform	Ø.619	Ø.814	-31.5	*	
1,2-Dichloroethane	Ø.416	Ø.564	-35.6	*	
2-Butanone	Ø.211	Ø.2Ø1	4.7		
1,1,1-Trichloroethane	Ø.569	Ø.625	-9.8	*	
Carbon Tetrachloride	Ø.483	Ø.515	-6.6	*	
1,1-Dichloropropene	Ø.52Ø	Ø.7Ø9	-36.3		
Bromodichloromethane	Ø.563	Ø.767	-36.2	*	
1,2-Dichloropropane	Ø.436	Ø.729	-67.2		
Dibromomethane	Ø.274	Ø.295	-7.7		
Trans-1,3-Dichloropropene	Ø.481	Ø.664	-38.Ø	*	
Trichloroethene	Ø.384	Ø.428	-11.5	*	
Dibromochloromethane	Ø.375	Ø.4Ø9	-9.1	*	
1,2-Dibromoethane	Ø.336	Ø.329	2.1	*	
1,1,2-Trichloroethane	Ø.317	Ø.343	-8.2	*	
1,3-Dichloropropane	Ø.61Ø	Ø.826	-35.4		
Benzene	1.596	2.299	-44.Ø	*	
cis-1,3-Dichloropropene	Ø.598	Ø.854	-42.8	*	
Bromoform	Ø.237	Ø.373	-57.4	*	
2-Hexanone	Ø.323	Ø.367	-13.6		
4-Methyl-2-Pentanone	Ø.455	Ø.5Ø1	-1Ø.1		
Tetrachloroethene	Ø.3Ø3	Ø.351	-15.8	*	
1,1,2,2-Tetrachloroethane	Ø.55Ø	Ø.566	-2.9	*	
1,1,1,2-Tetrachloroethane	Ø.353	Ø.374	-5.9		
Toluene	1.768	2.189	-23.8	*	
Chlorobenzene	1.Ø69	1.131	-5.8	*	
Ethylbenzene	2.Ø49	2.393	-16.8	*	
Styrene	1.132	1.172	-3.5	*	
Bromobenzene	Ø.471	Ø.7Ø1	-48.8		
1,2,3-Trichloropropane	Ø.43Ø	Ø.68Ø	-58.1		
2-Chlorotoluene	Ø.498	Ø.693	-39.2		
4-Chlorotoluene	Ø.58Ø	Ø.733	-26.4		
Total Xylenes	Ø.6Ø5	Ø.648	-7.1	*	
1,2,4-Trimethylbenzene	2.2Ø5	2.731	-23.9		
Tert-Butylbenzene	1.857	2.617	-4Ø.9		

30

CONTINUING CALIBRATION CHECK
VOLATILE HSL COMPOUNDS

Case No: AVW11ØØ Region: EPA-1Ø Calibration Date: Ø4/1Ø/91
Contractor: MANCHESTER LAB Time: Ø9:44
Contract No: A1Ø91AV Laboratory ID: AVW11ØØ
Instrument ID: 51ØØ Initial Call. Date: Ø4/Ø1/91

Minimum RF for CCC Varies Ø.1-Ø.6. Maximum %D for CCC is 3Ø%

Compound	AVE RF	RF(5Ø)	% D	CCC	SPCC
1,3,5-Trimethylbenzene	2.355	2.821	-19.8		
Sec-Butylbenzene	2.967	3.689	-24.3		
p-Isopropyltoluene	2.8Ø8	2.97Ø	-5.8		
Butylbenzene	2.974	3.787	-27.3		
1,2-Dibromo-3-chloropropane .	Ø.Ø87	Ø.131	-5Ø.6		
1,2,3-Trichlorobenzene	Ø.595	Ø.781	-31.3		
Isopropylbenzene	2.289	3.142	-37.3		
Propylbenzene	Ø.562	Ø.8ØØ	-42.3		
Total Xylenes	Ø.773	Ø.7Ø6	8.7	*	
1,3-Dichlorobenzene	1.Ø39	1.4Ø7	-35.4	*	
1,4-Dichlorobenzene	1.278	1.5ØØ	-17.4	*	
1,2-Dichlorobenzene	1.Ø8Ø	1.334	-23.5	*	
1,2,4-Trichlorobenzene	Ø.728	Ø.96Ø	-31.9		
Naphthalene	1.3Ø3	1.416	-8.7		
Hexachlorobutadiene	Ø.384	Ø.567	-47.7		

RF(5Ø) - Response Factor from daily standard file at 5Ø ug/l
AVE RF - Average Response Factor from initial calibration Form VI
%D - - - Percent Difference
CCC - - Calibration Check Compounds (*)
SPCC - - System Performance Check Compounds (**)
(1) - - Mininum RF for Bromoform is Ø.25Ø

30

Form VII

CONTINUING CALIBRATION CHECK
VOLATILE HSL COMPOUNDS

Case No: AVW11Ø1 Region: EPA-1Ø Calibration Date: Ø4/11/91
Contractor: MANCHESTER LAB Time: Ø9:46
Contract No: A1Ø91AV Laboratory ID: AVW11Ø1
Instrument ID: 51ØØ Initial Cali. Date: Ø4/Ø1/91

Minimum RF for CCC Varies Ø.1-Ø.6. Maximum %D for CCC is 3Ø%

Compound	AVE RF	RF(5Ø)	% D	CCC	SPCC
Chloromethane	Ø.417	Ø.749	-79.6		
Dichlorodifluoromethane	Ø.974	1.284	-31.8		
Bromomethane	Ø.257	Ø.292	-13.6	*	
Vinyl Chloride	Ø.412	Ø.687	-66.7	*	
Chloroethane	Ø.238	Ø.385	-61.8		
Trichlorofluoromethane	Ø.494	Ø.553	-11.9		
Methylene Chloride	Ø.398	Ø.543	-36.4		
Acetone	Ø.194	Ø.175	9.8		
Carbon Disulfide	Ø.898	1.481	-64.9		
1,1-Dichloroethene	Ø.27Ø	Ø.428	-58.5	*	
1,1-Dichloroethane	Ø.663	1.Ø41	-57.Ø	*	
Trans-1,2-Dichloroethene	Ø.345	Ø.462	-33.9		
Cis-1,2-Dichloroethene	Ø.366	Ø.5Ø5	-38.Ø		
2,2-Dichloropropane	Ø.452	Ø.594	-31.4		
Bromochloromethane	Ø.16Ø	Ø.193	-2Ø.6	*	
Chloroform	Ø.619	Ø.89Ø	-43.8	*	
1,2-Dichloroethane	Ø.416	Ø.666	-6Ø.1	*	
2-Butanone	Ø.211	Ø.241	-14.2		
1,1,1-Trichloroethane	Ø.569	Ø.7Ø7	-24.3	*	
Carbon Tetrachloride	Ø.483	Ø.595	-23.2	*	
1,1-Dichloropropene	Ø.52Ø	Ø.886	-7Ø.4		
Bromodichloromethane	Ø.563	Ø.892	-58.4	*	
1,2-Dichloropropane	Ø.436	Ø.841	-92.9		
Dibromomethane	Ø.274	Ø.383	-39.8		
Trans-1,3-Dichloropropene	Ø.481	Ø.8Ø5	-67.4	*	
Trichloroethene	Ø.384	Ø.49Ø	-27.6	*	
Dibromochloromethane	Ø.375	Ø.483	-28.8	*	
1,2-Dibromoethane	Ø.336	Ø.423	-25.9	*	
1,1,2-Trichloroethane	Ø.317	Ø.426	-34.4	*	
1,3-Dichloropropane	Ø.61Ø	Ø.993	-62.8		
Benzene	1.596	2.624	-64.4	*	
cis-1,3-Dichloropropene	Ø.598	1.ØØ2	-67.6	*	
Bromoform	Ø.237	Ø.434	-83.1	*	
2-Hexanone	Ø.323	Ø.433	-34.1		
4-Methyl-2-Pentanone	Ø.455	Ø.658	-44.6		
Tetrachloroethene	Ø.3Ø3	Ø.372	-22.8	*	
1,1,2,2-Tetrachloroethane	Ø.55Ø	Ø.697	-26.7	*	
1,1,1,2-Tetrachloroethane	Ø.353	Ø.441	-24.9		
Toluene	1.768	2.454	-38.8	*	
Chlorobenzene	1.Ø69	1.256	-17.5	*	
Ethylbenzene	2.Ø49	2.682	-3Ø.9	*	
Styrene	1.132	1.319	-16.5	*	
Bromobenzene	Ø.471	Ø.816	-73.2		
1,2,3-Trichloropropane	Ø.43Ø	Ø.911	-111.9		
2-Chlorotoluene	Ø.498	Ø.829	-66.5		
4-Chlorotoluene	Ø.58Ø	Ø.859	-48.1		
Total Xylenes	Ø.6Ø5	Ø.744	-23.Ø	*	
1,2,4-Trimethylbenzene	2.2Ø5	3.332	-51.1		
Tert-Butylbenzene	1.857	2.8Ø4	-51.Ø		

47

CONTINUING CALIBRATION CHECK
VOLATILE HSL COMPOUNDS

Case No: AVW11Ø1 Region: EPA-1Ø Calibration Date: Ø4/11/91
Contractor: MANCHESTER LAB Time: Ø9:46
Contract No: A1Ø91AV Laboratory ID: AVW11Ø1
Instrument ID: 51ØØ Initial Cali. Date: Ø4/Ø1/91

Minimum RF for CCC Varies Ø.1-Ø.6. Maximum %D for CCC is 3Ø%

Compound	AVE RF	RF(5Ø)	% D	CCC	SPCC
1,3,5-Trimethylbenzene	2.355	3.487	-48.1		
Sec-Butylbenzene	2.967	4.558	-53.6		
p-Isopropyltoluene	2.8Ø8	3.5Ø9	-25.Ø		
Butylbenzene	2.974	4.437	-49.2		
1,2-Dibromo-3-chloropropane .	Ø.Ø87	Ø.167	-92.Ø		
1,2,3-Trichlorobenzene	Ø.595	Ø.741	-24.5		
Isopropylbenzene	2.289	3.875	-69.3		
Propylbenzene	Ø.562	Ø.974	-73.3		
Total Xylenes	Ø.773	Ø.859	-11.1	*	
1,3-Dichlorobenzene	1.Ø39	1.6Ø5	-54.5	*	
1,4-Dichlorobenzene	1.278	1.7Ø1	-33.1	*	
1,2-Dichlorobenzene	1.Ø8Ø	1.54Ø	-42.6	*	
1,2,4-Trichlorobenzene	Ø.728	Ø.92Ø	-26.4		
Naphthalene	1.3Ø3	1.323	-1.5		
Hexachlorobutadiene	Ø.384	Ø.572	-49.Ø		

RF(5Ø) - Response Factor from daily standard file at 5Ø ug/l
AVE RF - Average Response Factor from initial calibration Form VI
%D - - - Percent Difference
CCC - - Calibration Check Compounds (*)
SPCC - - System Performance Check Compounds (**)
(1) - - Mininum RF for Bromoform is Ø.25Ø

Form VII

47

GC/MS Tuning and Mass Calibration

BROMOFLUOROBENZENE

Case Number:		Laboratory:		Contract:	
Inst ID:	5100	Sens Date:	04/09/91	Sens Time:	9:49:00
Lab ID:	ABF1099	Cali Date:		Analyst:	SVP

Data release authorized by:

_____

m/z	Ion Abundance Criteria	Spec #1045	
50	15 to 40% of mass 95	26.49	
75	30 to 60% of mass 95	50.37	
95	base peak, 100% relative abundance	100.00	
96	5 to 9% of mass 95	7.67	
173	less than 1% of mass 95	0.00	
174	greater than 50% of mass 95	50.45	
175	5 to 9% of mass 174	3.04	(6.02) 1
176	between 95% and 101% of mass 174	49.70	(98.52) 1
177	5 to 9% of mass 176	3.24	(6.52) 2

1 - value in parenthesis is % of mass 174
2 - value in parenthesis is % of mass 176

MID Mass List Data: ABF1099 #1048 Base m/z: 95
04/09/91 9:49:00 + 10:29 Cali: ABF1099 # 4 RIC: 190208.
Sample: ABF1099, BFB CALIBRATION, 50NG/10ML
Conds.: DB-624,30M,0.32MM, 1.8U, 10CC/2MIN,10-102/8C, 102-180/60C & HOLD
#1045 to #1052 Summed - #1042 X1.00

36 0.00 0.00 0. Minima Min inten: 0.
282 # 0 Maxima

Mass		% RA	% RIC	Inten.	Mass		% RA	% RIC	Inten.
36.00?		1.38	0.31	592.	118.00		0.13	0.03	54.
37.00?		9.22	2.08	3960.	119.00		0.35	0.08	150.
38.00?	S	7.24	1.63	3108.	128.00		0.07	0.02	30.
39.00?	S	1.15	0.26	496.	129.00		0.05	0.01	22.
47.00?		3.33	0.75	1428.	130.00		0.10	0.02	44.
48.00?		1.20	0.27	516.	131.00		0.05	0.01	22.
49.00?		6.31	1.42	2708.	135.00		0.02	0.01	10.
50.00?	S	26.49	5.98	11376.	141.00		0.55	0.13	238.
51.00?		8.25	1.86	3544.	143.00		0.49	0.11	210.
52.00?	S	0.28	0.06	120.	147.00	S	0.01	0.00	6.
59.00?		0.43	0.10	184.	148.00		0.14	0.03	58.
60.00?		1.49	0.34	640.	155.00		0.08	0.02	36.
61.00?	S	5.40	1.22	2320.	159.00		0.02	0.01	10.
62.00?		5.42	1.22	2328.	172.00		0.02	0.01	10.
63.00?		4.14	0.93	1778.	174.00	S	50.45	11.39	21664.
64.00?		0.26	0.06	112.	175.00		3.04	0.69	1304.
67.00?		0.11	0.02	46.	176.00		49.70	11.22	21344.
68.00?		13.77	3.11	5912.	177.00	S	3.24	0.73	1390.
69.00	S	10.88	2.46	4672.	207.00		0.12	0.03	50.
70.00		1.21	0.27	518.	221.00		0.02	0.01	10.
73.00	S	6.73	1.52	2888.	282.00		0.03	0.01	12.
74.00	S	17.79	4.02	7640.					
75.00	S	50.37	11.37	21632.					
76.00		4.97	1.12	2136.					
77.00		1.20	0.27	516.					
78.00		0.95	0.21	408.					
79.00		2.18	0.49	938.					
80.00		0.88	0.20	378.					
81.00		2.36	0.53	1014.					
82.00		0.51	0.11	218.					
83.00		0.03	0.01	12.					
86.00		0.02	0.01	10.					
87.00	S	4.38	0.99	1880.					
88.00		5.31	1.20	2280.					
89.00		0.04	0.01	16.					
91.00		0.15	0.03	64.					
92.00		3.01	0.68	1294.					
93.00		4.68	1.06	2008.					
94.00		12.78	2.89	5488.					
95.00	S	100.00	22.58	42944.					
96.00		7.67	1.73	3292.					
97.00		0.20	0.04	84.					
100.00		0.03	0.01	12.					
104.00		0.10	0.02	44.					
106.00		0.21	0.05	90.					
107.00		0.05	0.01	20.					
111.00		0.04	0.01	16.					
115.00		0.02	0.01	10.					
116.00		0.12	0.03	52.					
117.00		0.45	0.10	192.					

MID MASS SPECTRUM
04/09/91 9:49:00 + 10:29
SAMPLE: ABF1099, BFB CALIBRATION, 50NG/10ML
CONDS.: DB-624,30M,0.32MM, 1.8U, 10CC/2MIN,10-102/8C, 102-180/60C & HOLD
GC TEMP: 118 DEG. C
#1045 TO #1052 SUMMED - #1042 X1.00

DATA: ABF1099 #1048
CALI: ABF1099 #4

BASE M/Z: 95
RIC: 190208.

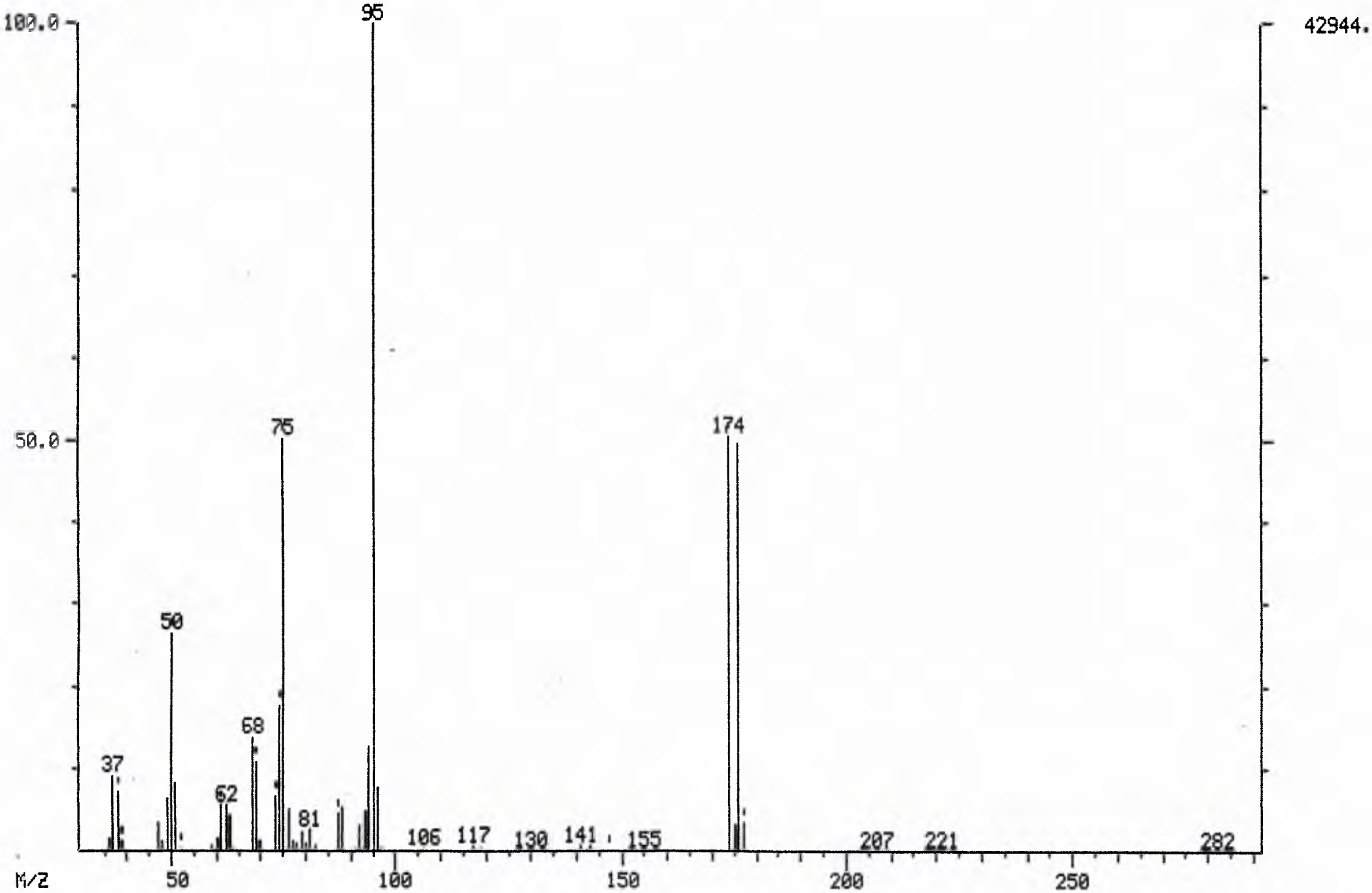

GC/MS Tuning and Mass Calibration

BROMOFLUOROBENZENE

Case Number:		Laboratory:		Contract:	
Inst ID:	5100	Sens Date:	04/10/91	Sens Time:	8:54:00
Lab ID:	ABF1100	Cali Date:		Analyst:	SVP

Data release authorized by: _____

m/z	Ion Abundance Criteria	Spec #1089		
50	15 to 40% of mass 95	26.95		
75	30 to 60% of mass 95	51.74		
95	base peak, 100% relative abundance	100.00		
96	5 to 9% of mass 95	7.94		
173	less than 1% of mass 95	0.00		
174	greater than 50% of mass 95	51.30		
175	5 to 9% of mass 174	3.32	(6.48) 1	
176	between 95% and 101% of mass 174	51.39	(*100.) 1	(100.1% jm)
177	5 to 9% of mass 176	3.75	(7.31) 2	

1 - value in parenthesis is % of mass 174
2 - value in parenthesis is % of mass 176

MID Mass List Data: ABF1100 #1092 Base m/z: 95
04/10/91 8:54:00 + 10:55 Cali: ABF1100 # 9 RIC: 82944.
Sample: ABF1100, BFB CALIBRATION, 50NG/10ML
Conds.: DB-624,30M,0.32MM, 1.8U, 10CC/2MIN,10-102/8C, 102-180/60C & HOLD
#1089 to #1095 Summed - #1085 X1.00

36 0.00 0.00 0. Minima Min inten: 0.
252 # 0 Maxima

Mass		% RA	% RIC	Inten.	Mass	% RA	% RIC	Inten.
36.00?		1.33	0.30	246.	141.00	0.14	0.03	26.
37.00?		8.47	1.88	1562.	143.00	0.29	0.07	54.
38.00?		8.51	1.89	1568.	147.00	0.11	0.02	20.
39.00?	S	2.66	0.59	490.	174.00	51.30	11.40	9456.
40.00?	S	0.28	0.06	52.	175.00	3.32	0.74	612.
42.00?		0.10	0.02	18.	176.00	51.39	11.42	9472.
46.00?		0.05	0.01	10.	177.00	3.75	0.83	692.
47.00?		2.99	0.67	552.	207.00	0.15	0.03	28.
48.00?		0.79	0.18	146.	252.00	0.13	0.03	24.
49.00?		5.87	1.30	1082.				
50.00?		26.95	5.99	4968.				
51.00?		8.13	1.81	1498.				
55.00?	S	0.27	0.06	50.				
56.00?	S	1.64	0.36	302.				
57.00?	S	0.05	0.01	10.				
59.00?		0.07	0.01	12.				
60.00?		0.84	0.19	154.				
61.00?		6.28	1.40	1158.				
62.00?		5.71	1.27	1052.				
63.00?		4.48	1.00	826.				
64.00?		0.13	0.03	24.				
67.00?		0.13	0.03	24.				
68.00?		13.41	2.98	2472.				
69.00		12.15	2.70	2240.				
70.00		0.87	0.19	160.				
72.00		0.12	0.03	22.				
73.00	S	6.83	1.52	1258.				
74.00		17.80	3.95	3280.				
75.00	S	51.74	11.50	9536.				
76.00		4.68	1.04	862.				
77.00		1.32	0.29	244.				
78.00		0.63	0.14	116.				
79.00		2.21	0.49	408.				
80.00		0.56	0.13	104.				
81.00		2.16	0.48	398.				
82.00		0.14	0.03	26.				
87.00		5.95	1.32	1096.				
88.00		5.21	1.16	960.				
89.00		0.07	0.01	12.				
91.00		0.10	0.02	18.				
92.00		2.94	0.65	542.				
93.00		5.06	1.12	932.				
94.00		12.13	2.70	2236.				
95.00		100.00	22.22	18432.				
96.00		7.94	1.77	1464.				
104.00		0.07	0.01	12.				
117.00		0.29	0.07	54.				
128.00		0.05	0.01	10.				
130.00		0.05	0.01	10.				
133.00		0.05	0.01	10.				

MID MASS SPECTRUM
04/10/91 8:54:00 + 10:55
SAMPLE: ABF1100, BFB CALIBRATION, 50NG/10ML
CONDS.: DB-624,30M,0.32MM, 1.8U, 10CC/2MIN,10-102/8C, 102-180/60C & HOLD
GC TEMP: 121 DEG. C
#1089 TO #1095 SUMMED - #1085 X1.00

DATA: ABF1100 #1092
CALI: ABF1100 #9

BASE M/Z: 95
RIC: 82944.

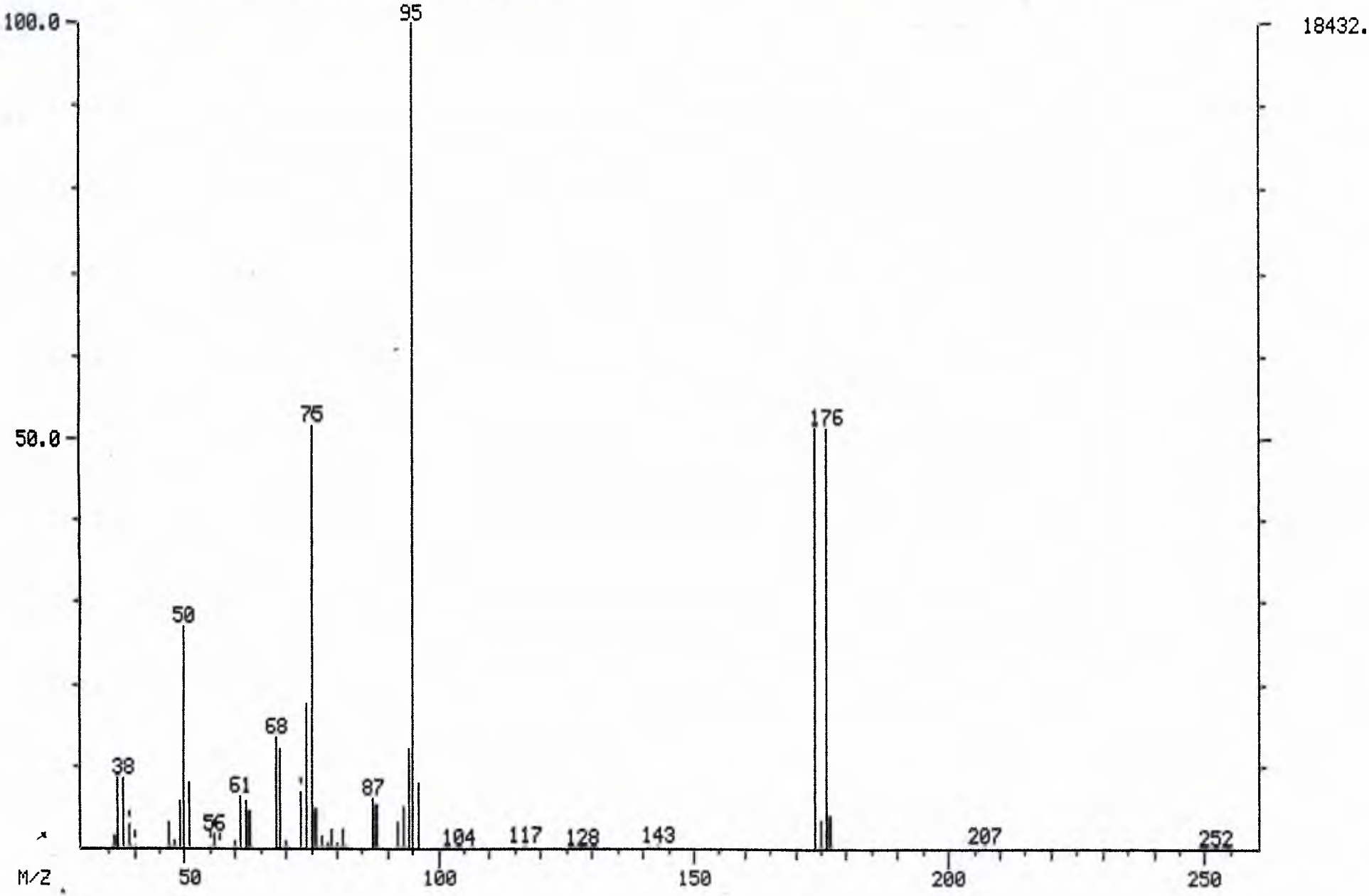

GC/MS Tuning and Mass Calibration

BROMOFLUOROBENZENE

Case Number:		Laboratory:		Contract:	
Inst ID:	5100	Sens Date:	04/11/91	Sens Time:	8:49:00
Lab ID:	ABF1101	Cali Date:		Analyst:	SVP

Data release authorized by: _____

m/z	Ion Abundance Criteria	Spec #1047	
50	15 to 40% of mass 95	26.49	
75	30 to 60% of mass 95	52.02	
95	base peak, 100% relative abundance	100.00	
96	5 to 9% of mass 95	7.48	
173	less than 1% of mass 95	0.00	
174	greater than 50% of mass 95	51.15	
175	5 to 9% of mass 174	3.87	(7.57) 1
176	between 95% and 101% of mass 174	48.94	(95.67) 1
177	5 to 9% of mass 176	3.75	(7.67) 2

1 - value in parenthesis is % of mass 174
2 - value in parenthesis is % of mass 176

MID Mass List Data: ABF1101 #1047 Base m/z: 95
04/17/91 8:49:00 + 10:28 Cali: ABF1101 # 4 RIC: 37696.
Sample: ABF1101, BFB CALIBRATION RUN, 50NG/10ML
Conds.: DB-624,30M,0.32MM, 1.8U, 10CC/2MIN,10-102/8C, 102-180/60C & HOLD
#1047 to #1048 Summed - #1041 X1.00

36 0.00 0.00 0. Minima Min inten: 0.
281 # 0 Maxima

Mass		% RA	% RIC	Inten.
36.00?		1.78	0.39	148.
37.00?		8.61	1.90	716.
38.00?		7.43	1.64	618.
39.00?		3.41	0.75	284.
40.00?	S	0.58	0.13	48.
44.00?	S	0.72	0.16	60.
45.00?	S	0.89	0.20	74.
47.00?		2.81	0.62	234.
48.00?		0.26	0.06	22.
49.00?		6.68	1.47	556.
50.00?		26.49	5.85	2204.
51.00?		8.41	1.86	700.
52.00?		0.12	0.03	10.
53.00?		0.12	0.03	10.
55.00?		0.29	0.06	24.
56.00?		0.94	0.21	78.
57.00?	S	3.41	0.75	284.
58.00?		0.12	0.03	10.
59.00?		0.17	0.04	14.
60.00?		1.25	0.28	104.
61.00?		5.53	1.22	460.
62.00?		4.93	1.09	410.
63.00?		4.04	0.89	336.
64.00?		0.24	0.05	20.
67.00?		0.12	0.03	10.
68.00?		14.06	3.10	1170.
69.00		11.32	2.50	942.
70.00		1.37	0.30	114.
71.00		0.17	0.04	14.
72.00		0.87	0.19	72.
73.00	S	6.08	1.34	506.
74.00		17.16	3.79	1428.
75.00	S	52.02	11.48	4328.
76.00		5.24	1.16	436.
77.00		1.15	0.25	96.
78.00		0.60	0.13	50.
79.00		2.36	0.52	196.
80.00		0.87	0.19	72.
81.00		2.40	0.53	200.
82.00		0.55	0.12	46.
87.00		4.78	1.06	398.
88.00		5.50	1.21	458.
91.00		0.17	0.04	14.
92.00		2.91	0.64	242.
93.00		4.88	1.08	406.
94.00		12.69	2.80	1056.
95.00	S	100.00	22.07	8320.
96.00		7.48	1.65	622.
116.00		0.14	0.03	12.
119.00		0.17	0.04	14.

Maxima Mass	% RA	% RIC	Inten.
131.00	0.14	0.03	12.
141.00	0.31	0.07	26.
143.00	0.34	0.07	28.
147.00	0.14	0.03	12.
155.00	0.12	0.03	10.
172.00	0.12	0.03	10.
174.00	51.15	11.29	4256.
175.00	3.87	0.85	322.
176.00	48.94	10.80	4072.
177.00	3.75	0.83	312.
250.00	0.26	0.06	22.
252.00	0.17	0.04	14.
281.00	0.36	0.08	30.

MID MASS SPECTRUM
04/11/91 8:49:00 + 10:28
SAMPLE: ABF1101, BFB CALIBRATION RUN, 50NG/10ML
CONDS.: DB-624,30M,0.32MM, 1.8U, 10CC/2MIN,10-102/8C, 102-180/60C & HOLD
GC TEMP: 118 DEG. C
#1047 TO #1048 SUMMED - #1041 X1.00

DATA: ABF1101 #1047
CALI: ABF1101 #4

BASE M/Z: 95
RIC: 37696.

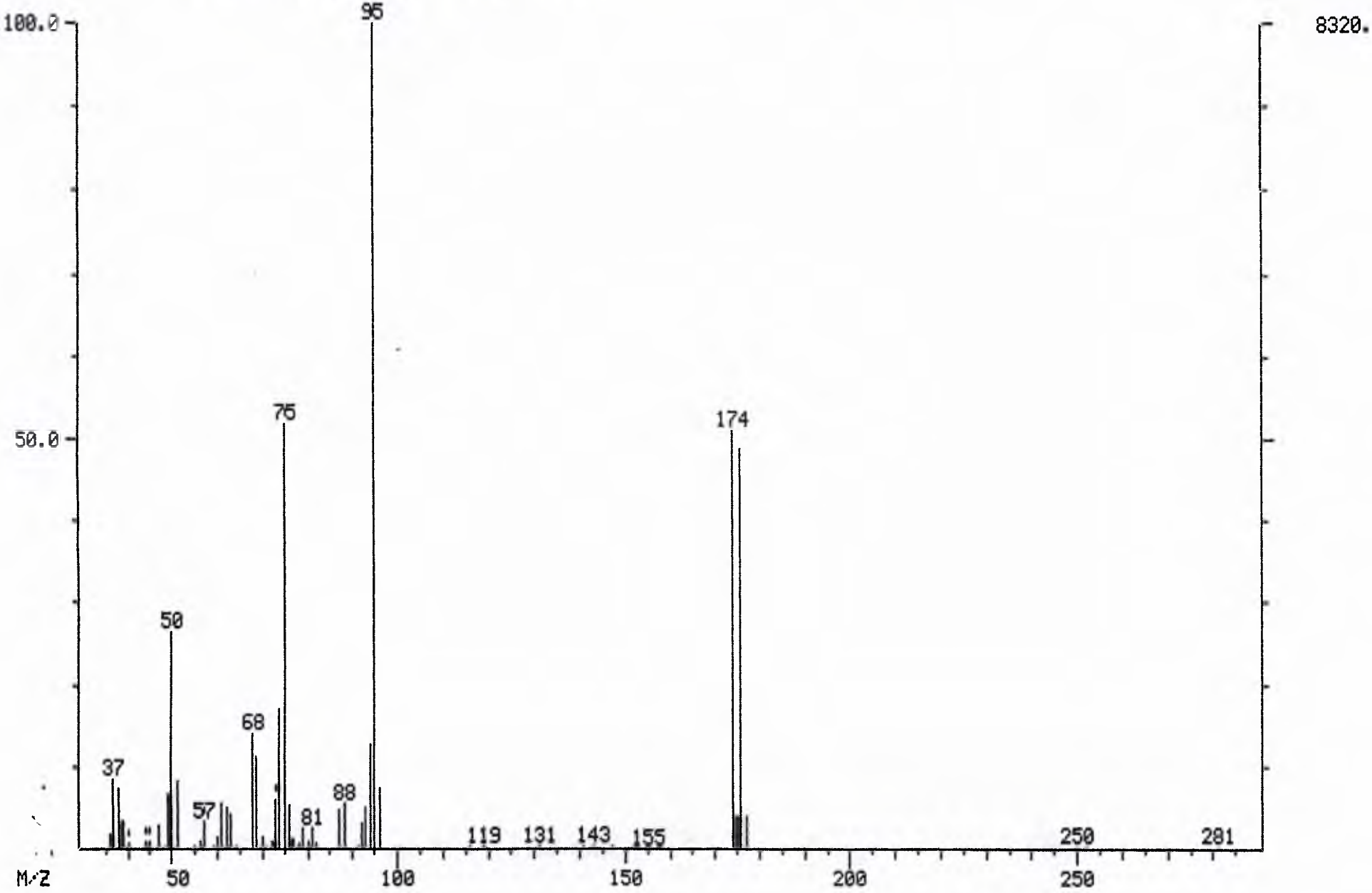

EPA Laboratory Management System
(51) VOA - PP Scan (GCMS)

Sample: ~~91130152~~ ABW1099
Method: EP2-624 GC/MS Purge and Trap Scan
Project: HWD-127A RIDGEFIELD BRICK AND TILE
Station: _____ Source:(23) Well (Test/Observati

Matrix:(10) Water-Total
Officer: Bailey, Marsha
Account: AGDD3A
Field Prep:(__) Unknown

Collected: 91/ 03/ 27
Received: 91/ 03/ 29
Comments: _____

Extracted: 91/04/09 Extractor: _____ Weight/Volume Extracted: _____
Analyzed: 91/04/09 12:03 Analyst: SVP Percent Solids: _____
Reviewed: 91/06/25 By: SVP Final Review: 7/11/91 By: JMB

IBM Report: ___/___/___ By: _____

Sample Volume (ml): 10
Volume Water Aliquated (ml): —
Dilution Factor: —
Tape Identification: 9-1991-5100E1
Tape File Number: 5

Standard Run: ABW1099
Std. Stock Solution #: —
Background Run: ABW1099
Calibration Run: ABF1099
Extraction Solvent: —

Initial Vol. Extraction Solv.(ml): —
Volume Extract Aliquated (ul): —
Total Volume Purged (ml): 10

Dilution Factor: —

Purge Temp. (deg. C): Ambient-H2O
Purge Flow (ml/min): 40
Purge Time (min): 11

Desorb Temp.(deg. C): 220
Desorb Flow (ml/min): 12
Desorb Time (min): 4

Cryo Trap Temp. (deg. C): -150
Cryo Trap Time (min): 4

Instrument: Finnigan
Carrier Gas: Helium
Gas Flow Rate (ml/min): 2
Run Time (min): 20

Column Coating , Film Thickness: DB-624, 1.8 u
Column Inside Diameter (mm): 0.32
Column Length (M): 30
Column Tubing Material: Fused Silica

Start Mass (AMU): 35
AMU/sec: 240
Stop Mass (AMU): 300

Temperature 1,2 (deg. C): 10 , 102
Time 1,2 (min): 2 , 11.5
Ramp Rate 1,2 (deg. C/min): Hold , 8
Temperature 3,4 (deg. C): 120 , 180
Time 3,4 (min): 1 , 5.3
Ramp Rate 3,4 (deg. C/min): 60 , Hold

Injection Port Temp. (deg. C): 200
GC/MS Ionization Mode: E I
Data Acquisition Mode: Acquire
Mass Analyzer (deg. C): 100
Beam Energy (EV): 70
Vacuum (Torr): 0.00001 (10^-5)

(End of Form) 1-APR-91 11:06 91130152

Sample Number
ABW1099

ORGANICS ANALYSIS DATA SHEET
(Page 1)

Laboratory Name: MANCHESTER LAB
Lab Sample ID No:
Sample Matrix: WATER
Data Release Authorized By:

Case No: HWD-127A/1011
QC Report No:
Contract No: AGDD3A
Date Sample Received:

VOLATILE COMPOUNDS

Concentration: LOW
Date Extracted/Prepared:
Date Analyzed: 04/09/91
Conc Factor: 5.000000 pH
Percent Moisture: (Not Decanted)

CAS Number		ug/L	CAS Number		ug/L
74-87-3	Chloromethane	1 U	127-18-4	Tetrachloroethene	1 U
75-71-8	Dichlorodifluoromethane	1 U	79-34-5	1,1,2,2-Tetrachloroethane	1 U
74-83-9	Bromomethane	1 U	630-20-6	1,1,1,2-Tetrachloroethane	1 U
75-01-4	Vinyl Chloride	1 U	108-88-3	Toluene	~~0.03J~~ 1u
75-00-3	Chloroethane	1 U	108-90-7	Chlorobenzene	1 U
75-69-4	Trichlorofluoromethane	1 U	100-41-4	Ethylbenzene	1 U
75-09-2	Methylene Chloride	0.7J	100-42-5	Styrene	1 U
67-64-1	Acetone	~~8~~4.8	108-86-1	Bromobenzene	1 U
75-15-0	Carbon Disulfide	1 U	96-18-4	1,2,3-Trichloropropane	1 U
75-35-4	1,1-Dichloroethene	1 U	95-49-8	2-Chlorotoluene	1 U
75-34-3	1,1-Dichloroethane	1 U	106-43-4	4-Chlorotoluene	1 U
156-60-5	Trans-1,2-Dichloroethene	1 U	1330-20-7	Total Xylenes	0.02J ~~1 U~~
156-59-2	Cis-1,2-Dichloroethene	1 U	95-63-6	1,2,4-Trimethylbenzene	~~0.03J~~ 1u
590-20-7	2,2-Dichloropropane	1 U	98-06-6	Tert-Butylbenzene	1 U
74-97-5	Bromochloromethane	1 U	108-67-8	1,3,5-Trimethylbenzene	1 U
67-66-3	Chloroform	1 U	135-98-8	Sec-Butylbenzene	1 U
107-06-2	1,2-Dichloroethane	1 U	99-87-6	p-Isopropyltoluene	1 U
78-93-3	2-Butanone	0.6J	104-51-8	Butylbenzene	~~0.03J~~ 1u
71-55-6	1,1,1-Trichloroethane	1 U	96-12-8	1,2-Dibromo-3-chloropropane	1 U
56-23-5	Carbon Tetrachloride	1 U	87-61-6	1,2,3-Trichlorobenzene	0.07J
563-58-6	1,1-Dichloropropene	1 U	98-82-8	Isopropylbenzene	1 U
75-27-4	Bromodichloromethane	1 U	103-65-1	Propylbenzene	1 U
78-87-5	1,2-Dichloropropane	1 U		~~Total Xylenes~~	~~0.02J~~
74-95-3	Dibromomethane	1 U	541-73-1	1,3-Dichlorobenzene	0.03J
10061-02-6	Trans-1,3-Dichloropropene	1 U	106-46-7	1,4-Dichlorobenzene	1 U
79-01-6	Trichloroethene	1 U	95-50-1	1,2-Dichlorobenzene	1 U
124-48-1	Dibromochloromethane	1 U	120-82-1	1,2,4-Trichlorobenzene	0.06J
106-93-4	1,2-Dibromoethane	1 U	91-20-3	Naphthalene	~~0.1J~~ 1u
79-00-5	1,1,2-Trichloroethane	1 U	87-68-3	Hexachlorobutadiene	1 U
142-28-9	1,3-Dichloropropane	1 U			%
71-43-2	Benzene	0.03J	-762492	1-Bromo-2-Fluoroethane (SS)	92
10061-01-5	cis-1,3-Dichloropropene	1 U	2747-58-2	Toluene (d8) (SS)	96
75-25-2	Bromoform	1 U	-460-00-4	p-Bromofluorobenzene (SS)	101
591-78-6	2-Hexanone	1 U	17070-07-0	1,2-Dichloroethane-d4 (SS)	97
108-10-1	4-Methyl-2-Pentanone	1 U	~~2199-69-1~~	~~1,2-Dichlorobenzene-d4 (SS)~~	NAF

J - The numerical value is an estimated quantity.
U - Compound analyzed for but not detected. The reported value is the minimum sample PQL.

Form I

Laboratory Name: MANCHESTER LAB
Case No: HWD-127A/1011

Sample Number
ABW1099

TENTATIVELY IDENTIFIED COMPOUNDS
(Page 4)

	CAS Number	Compound Name	Fraction	Scan Num	Estimated Conc ug/L	
1		CI10 1,4-DIFLUOROBENZENE (INTERNAL STANDARD)	VOA		10	J
2		CI20 CHLOROBENZENE-D5 (INTERNAL STANDARD)	VOA		10	J
3		CI30 1,4-DICHLOROBENZENE-D4 (INTERNAL STANDARD)	VOA		10	J
4	541-05-9	CYCLOTRISILOXANE, HEXAMETHYL-	VOA		0.97	J
5	556-67-2	CYCLOTETRASILOXANE, OCTAMETHYL-	VOA		0.39	J

No semi-volatile compounds found.

See page 1A for complete definitions of the data reporting qualifiers.

Form I

EPA Laboratory Management System
(51) VOA - PP Scan (GCMS)

Sample: ~~91130152~~ ABW1100
Method: EP2-624 GC/MS Purge and Trap Scan
Project: HWD-127A RIDGEFIELD BRICK AND TILE
Station: _____ Source:(23) Well (Test/Observati

Matrix:(10) Water-Total
Officer: Bailey, Marsha
Account: AGDD3A
Field Prep:(__) Unknown

Collected: 91/ 03/ 27
Received: 91/ 03/ 29
Comments: _____

Extracted: 91/04/10 Extractor: _____ Weight/Volume Extracted: _____
Analyzed: 91/04/10 11:03 Analyst: SVP Percent Solids: _____
Reviewed: 91/07/01 By: SVP Final Review: 7/11/91 By: JMS
IBM Report: __/__/__ By: _____

Sample Volume (ml): 10
Volume Water Aliquated (ml): —
Dilution Factor: —
Tape Identification: 9-1991-5100E1
Tape File Number: 13

Standard Run: AVW1100
Std. Stock Solution #: —
Background Run: ABW1100
Calibration Run: ABF1100
Extraction Solvent: —

Initial Vol. Extraction Solv.(ml): —
Volume Extract Aliquated (ul): —
Total Volume Purged (ml): ~~5~~ 10

Dilution Factor: —

Purge Temp. (deg. C): Ambient-H2O
Purge Flow (ml/min): 40
Purge Time (min): 11

Desorb Temp.(deg. C): 220
Desorb Flow (ml/min): 12
Desorb Time (min): 4

Cryo Trap Temp. (deg. C): -150
Cryo Trap Time (min): 4

Instrument: Finnigan
Carrier Gas: Helium
Gas Flow Rate (ml/min): 2
Run Time (min): 20

Column Coating , Film Thickness: DB-624, 1.8 u
Column Inside Diameter (mm): 0.32
Column Length (M): 30
Column Tubing Material: Fused Silica

Start Mass (AMU): 35
AMU/sec: 2.0
Stop Mass (AMU): 300

Temperature 1,2 (deg. C): 10 , 102
Time 1,2 (min): 2 , 11.5
Ramp Rate 1,2 (deg. C/min): Hold , 8
Temperature 3,4 (deg. C): 120 , 180
Time 3,4 (min): 1 , 5.3
Ramp Rate 3,4 (deg. C/min): 60 , Hold

Injection Port Temp. (deg. C): 200
GC/MS Ionization Mode: E I
Data Acquisition Mode: Acquire
Mass Analyzer (deg. C): 100
Beam Energy (EV): 70
Vacuum (Torr): 0.00001 (10^-5)

(End of Form) 1-APR-91 11:06 91130152

Sample Number
ABW1100

ORGANICS ANALYSIS DATA SHEET
(Page 1)

Laboratory Name: MANCHESTER LAB
Lab Sample ID No:
Sample Matrix: WATER
Data Release Authorized By:

Case No: HWD-127A/1011
QC Report No:
Contract No: AGDD3A
Date Sample Received:

VOLATILE COMPOUNDS

Concentration: LOW
Date Extracted/Prepared:
Date Analyzed: 04/10/91
Conc Factor: 5.000000 pH
Percent Moisture: (Not Decanted)

CAS Number		ug/L	CAS Number		ug/L
74-87-3	Chloromethane	~~0.04J~~ 1u	127-18-4	Tetrachloroethene	1 U
75-71-8	Dichlorodifluoromethane	1 U	79-34-5	1,1,2,2-Tetrachloroethane	1 U
74-83-9	Bromomethane	1 U	630-20-6	1,1,1,2-Tetrachloroethane	1 U
75-01-4	Vinyl Chloride	1 U	108-88-3	Toluene	0.02J
75-00-3	Chloroethane	1 U	108-90-7	Chlorobenzene	1 U
75-69-4	Trichlorofluoromethane	1 U	100-41-4	Ethylbenzene	1 U
75-09-2	Methylene Chloride	~~0~~ 5.6	100-42-5	Styrene	1 U
67-64-1	Acetone	3.5 ~~4.5~~	108-86-1	Bromobenzene	1 U
75-15-0	Carbon Disulfide	0.1J	96-18-4	1,2,3-Trichloropropane	1 U
75-35-4	1,1-Dichloroethene	1 U	95-49-8	2-Chlorotoluene	1 U
75-34-3	1,1-Dichloroethane	1 U	106-43-4	4-Chlorotoluene	1 U
156-60-5	Trans-1,2-Dichloroethene	1 U	1330-20-7	Total Xylenes	1 U
156-59-2	Cis-1,2-Dichloroethene	1 U	95-63-6	1,2,4-Trimethylbenzene	0.02J
590-20-7	2,2-Dichloropropane	1 U	98-06-6	Tert-Butylbenzene	1 U
74-97-5	Bromochloromethane	1 U	108-67-8	1,3,5-Trimethylbenzene	0.01J
67-66-3	Chloroform	1 U	135-98-8	Sec-Butylbenzene	0.01J
107-06-2	1,2-Dichloroethane	1 U	99-87-6	p-Isopropyltoluene	1 U
78-93-3	2-Butanone	0.9J	104-51-8	Butylbenzene	0.02J
71-55-6	1,1,1-Trichloroethane	1 U	96-12-8	1,2-Dibromo-3-chloropropane	1 U
56-23-5	Carbon Tetrachloride	1 U	87-61-6	1,2,3-Trichlorobenzene	0.07J
563-58-6	1,1-Dichloropropene	1 U	98-82-8	Isopropylbenzene	1 U
75-27-4	Bromodichloromethane	1 U	103-65-1	Propylbenzene	1 U
78-87-5	1,2-Dichloropropane	1 U		~~Total Xylenes~~	~~1 U~~
74-95-3	Dibromomethane	1 U	541-73-1	1,3-Dichlorobenzene	0.03J
10061-02-6	Trans-1,3-Dichloropropene	1 U	106-46-7	1,4-Dichlorobenzene	1 U
79-01-6	Trichloroethene	1 U	95-50-1	1,2-Dichlorobenzene	0.04J
124-48-1	Dibromochloromethane	1 U	120-82-1	1,2,4-Trichlorobenzene	0.05J
106-93-4	1,2-Dibromoethane	1 U	91-20-3	Naphthalene	~~0.08J~~ 1u
79-00-5	1,1,2-Trichloroethane	1 U	87-68-3	Hexachlorobutadiene	1 U
142-28-9	1,3-Dichloropropane	1 U			%
71-43-2	Benzene	~~0.02J~~ 1u	-762492	1-Bromo-2-Fluoroethane (SS)	104
10061-01-5	cis-1,3-Dichloropropene	1 U	2747-58-2	Toluene (d8) (SS)	91
75-25-2	Bromoform	1 U	-460-00-4	p-Bromofluorobenzene (SS)	92
591-78-6	2-Hexanone	1 U	17070-07-0	1,2-Dichloroethane-d4 (SS)	98
108-10-1	4-Methyl-2-Pentanone	1 U	~~2199-69-1~~	~~1,2-Dichlorobenzene-d4 (SS)~~	NAP

J - The numerical value is an estimated quantity.
U - Compound analyzed for but not detected. The reported value is the minimum sample PQL.

Form I

Laboratory Name: MANCHESTER LAB
Case No: HWD-127A/1011

Sample Number
ABW1100

TENTATIVELY IDENTIFIED COMPOUNDS
(Page 4)

	CAS Number	Compound Name	Fraction	Scan Num	Estimated Conc ug/L	
1		CI10 1,4-DIFLUOROBENZENE (INTERNAL STANDARD)	VOA		10	J
2		CI20 CHLOROBENZENE-D5 (INTERNAL STANDARD)	VOA		10	J
3		CI30 1,4-DICHLOROBENZENE-D4 (INTERNAL STANDARD)	VOA		10	J
4	541-05-9	CYCLOTRISILOXANE, HEXAMETHYL-	VOA		1.0	J
5	556-67-2	CYCLOTETRASILOXANE, OCTAMETHYL-	VOA		0.35	J

No semi-volatile compounds found.

See page 1A for complete definitions of the data reporting qualifiers.

Form I

EPA Laboratory Management System
(51) VOA - PP Scan (GCMS)

Sample: ~~91130127~~ ABW1101
Method: EP2-624 GC/MS Purge and Trap Scan
Project: TEC-537A BOISE CASCADE; ST. HELEN'S, OR.
Station: _____ Source:(34) Industrial Effluent

Matrix:(10) Water-Total
Officer: Tangarone, Dan
Account: BCMM912
Field Prep:(__) Unknown

Collected: 91/ 03/ 25
Received: 91/ 03/ 27

Comments: _____

Extracted: __/__/__ Extractor: _____ Weight/Volume Extracted: _____

Analyzed: 4/11/91 13:41 Analyst: SVP Percent Solids: _____

Reviewed: __/__/__ By: _____ Final Review: 5/14/91 By: JMS

IBM Report: __/__/__ By: _____

Sample Volume (ml): 10 ml
Volume Water Aliquated (ml): _____
Dilution Factor: 1m
Tape Identification: 9 X-1991-5100-E AA#1
Tape File Number: 22

Standard Run: AVW1101
Std. Stock Solution #: _____
Background Run: ABW1101
Calibration Run: _____
Extraction Solvent: _____

Initial Vol. Extraction Solv.(ml): _____
Volume Extract Aliquated (ul): _____
Total Volume Purged (ml): 5

Dilution Factor: _____

Purge Temp. (deg. C): Ambient-H2O
Purge Flow (ml/min): 40
Purge Time (min): 11

Desorb Temp.(deg. C): 220
Desorb Flow (ml/min): 12
Desorb Time (min): 4

Cryo Trap Temp. (deg. C): -150
Cryo Trap Time (min): 4

Instrument: Finnigan
Carrier Gas: Helium
Gas Flow Rate (ml/min): 2
Run Time (min): 20

Column Coating , Film Thickness: DB-624, ____ u
Column Inside Diameter (mm):
Column Length (M): 30
Column Tubing Material: Fused Silica

Start Mass (AMU): 35
AMU/sec: 240
Stop Mass (AMU): 300

Temperature 1,2 (deg. C): 10 , 102
Time 1,2 (min): 2 , 11.5
Ramp Rate 1,2 (deg. C/min): Hold , 8
Temperature 3,4 (deg. C): 120 , 180
Time 3,4 (min): 1 , 5.3
Ramp Rate 3,4 (deg. C/min): 60 , Hold

Injection Port Temp. (deg. C): 200
GC/MS Ionization Mode: E I
Data Acquisition Mode: Acquire
Mass Analyzer (deg. C): 100
Beam Energy (EV): 70
Vacuum (Torr): 0.00001 (10^-5)

(End of Form) 28-MAR-91 11:07 91130127

Sample Number
A91BW11Ø1

ORGANICS ANALYSIS DATA SHEET
(Page 1)

Laboratory Name: MANCHESTER LAB
Lab Sample ID No: BLANK
Sample Matrix: WATER
Data Release Authorized By:

Case No: TEC-537A/1Ø11
QC Report No:
Contract No: BCMM912
Date Sample Received: Ø3/25/91

VOLATILE COMPOUNDS

Concentration:
Date Extracted/Prepared:
Date Analyzed: Ø4/11/91
Conc Factor: 1Ø.ØØØØØ pH
Percent Moisture: (Not Decanted)

CAS Number		ug/L	CAS Number		ug/L
74-87-3	Chloromethane	Ø.5U	127-18-4	Tetrachloroethene	Ø.5U
75-71-8	Dichlorodifluoromethane	Ø.5U	79-34-5	1,1,2,2-Tetrachloroethane	Ø.5U
74-83-9	Bromomethane	Ø.5U	63Ø-2Ø-6	1,1,1,2-Tetrachloroethane	Ø.5U
75-Ø1-4	Vinyl Chloride	Ø.5U	1Ø8-88-3	Toluene	Ø.5U
75-ØØ-3	Chloroethane	Ø.5U	1Ø8-9Ø-7	Chlorobenzene	Ø.5U
75-69-4	Trichlorofluoromethane	Ø.5U	1ØØ-41-4	Ethylbenzene	Ø.5U
75-Ø9-2	Methylene Chloride	2	1ØØ-42-5	Styrene	Ø.5U
67-64-1	Acetone	8	1Ø8-86-1	Bromobenzene	Ø.5U
75-15-Ø	Carbon Disulfide	Ø.5U	96-18-4	1,2,3-Trichloropropane	Ø.5U
75-35-4	1,1-Dichloroethene	Ø.5U	95-49-8	2-Chlorotoluene	Ø.5U
75-34-3	1,1-Dichloroethane	Ø.5U	1Ø6-43-4	4-Chlorotoluene	Ø.5U
156-6Ø-5	Trans-1,2-Dichloroethene	Ø.5U	133Ø-2Ø-7	Total Xylenes	Ø.5U
156-59-2	Cis-1,2-Dichloroethene	Ø.5U	95-63-6	1,2,4-Trimethylbenzene	Ø.5U
59Ø-2Ø-7	2,2-Dichloropropane	Ø.5U	98-Ø6-6	Tert-Butylbenzene	Ø.5U
74-97-5	Bromochloromethane	Ø.5U	1Ø8-67-8	1,3,5-Trimethylbenzene	Ø.5U
67-66-3	Chloroform	Ø.5U	135-98-8	Sec-Butylbenzene	Ø.5U
1Ø7-Ø6-2	1,2-Dichloroethane	Ø.5U	99-87-6	p-Isopropyltoluene	Ø.5U
78-93-3	2-Butanone	4	1Ø4-51-8	Butylbenzene	Ø.5U
71-55-6	1,1,1-Trichloroethane	Ø.5U	96-12-8	1,2-Dibromo-3-chloropropane	Ø.5U
56-23-5	Carbon Tetrachloride	Ø.5U	87-61-6	1,2,3-Trichlorobenzene	Ø.3J
563-58-6	1,1-Dichloropropene	Ø.5U	98-82-8	Isopropylbenzene	Ø.5U
75-27-4	Bromodichloromethane	Ø.5U	1Ø3-65-1	Propylbenzene	Ø.5U
78-87-5	1,2-Dichloropropane	Ø.5U		~~Total Xylenes~~	~~Ø.5U~~
74-95-3	Dibromomethane	Ø.5U	541-73-1	1,3-Dichlorobenzene	Ø.5U
1ØØ61-Ø2-6	Trans-1,3-Dichloropropene	Ø.5U	1Ø6-46-7	1,4-Dichlorobenzene	Ø.5U
79-Ø1-6	Trichloroethene	Ø.5U	95-5Ø-1	1,2-Dichlorobenzene	Ø.5U
124-48-1	Dibromochloromethane	Ø.5U	12Ø-82-1	1,2,4-Trichlorobenzene	Ø.3J
1Ø6-93-4	1,2-Dibromoethane	Ø.5U	91-2Ø-3	Naphthalene	Ø.4J
79-ØØ-5	1,1,2-Trichloroethane	Ø.5U	87-68-3	Hexachlorobutadiene	Ø.5U
142-28-9	1,3-Dichloropropane	Ø.5U			%
71-43-2	Benzene	Ø.5U	-762492	1-Bromo-2-Fluoroethane (SS)	91
1ØØ61-Ø1-5	cis-1,3-Dichloropropene	Ø.5U	2747-58-2	Toluene (d8) (SS)	94
75-25-2	Bromoform	Ø.5U	-46Ø-ØØ-4	p-Bromofluorobenzene (SS)	98
591-78-6	2-Hexanone	Ø.5U	17Ø7Ø-Ø7-Ø	1,2-Dichloroethane-d4 (SS)	98
1Ø8-1Ø-1	4-Methyl-2-Pentanone	Ø.5U	2199-69-1	1,2-Dichlorobenzene-d4 (SS	NAF

B - Compound was detected in the QC blank.
J - The numerical value is an estimated quantity.
U - Compound analyzed for but not detected. The reported value is the minimum sample PQL.

Form I

MANCHESTER LAB
TEC-537A/1011

Sample Number
A91BW1101

TENTATIVELY IDENTIFIED COMPOUNDS
(Page 4)

CAS Number	Compound Name	Fraction	Scan Num	Estimated Conc ug/L

No volatile compounds found.
No semi-volatile compounds found.

See page 1A for complete definitions of the data reporting qualifiers.

Form I

WATER MATRIX SPIKE / MATRIX SPIKE DUPLICATE RECOVERY

CASE NO HWD-127A | LABORATORY MANCHESTER LAB | CONTRACT AGDD3A
SAS NO 1011 | REPORTED 07/03/91 08:31 | CUSTOMER EPA-BAILEY

FILE NAME A130152 | SAMPLE ID A91130152 | LEVEL LOW
SPIKE A130152Y | LAB SAMP ID | MATRIX WATER
DUP SPIKE A130152Z | ANALYZED 04/09/91 13:21 | UNITS ug/L

COMPOUND	TYPES	CONC SAMPLE	CONC SPIKED	CONC MS	% REC	CONC MSD	% REC	RPD
Chloromethane	V		23.00 ~~22.00~~	14.90	~~68~~ 65	18.40	~~84~~ 80	~~-21~~ 19
Dichlorodifluoromethane	V		20.00	11.50	58	7.49	37	42
Bromomethane	V		22.00	15.20	69	20.70	94	-31
Vinyl Chloride	V		20.00	13.60	68	16.10	80	-17
Chloroethane	V		21.00	14.80	~~67~~ 70	19.20	~~87~~ 91	-26
Trichlorofluoromethane	V		20.00	13.40	67	19.10	96	-35
Methylene Chloride	V		20.00	19.30	96	24.60	123	-24
Acetone	V		20.00	29.90	150	25.10	126	17
Carbon Disulfide	V	2.03	20.00	15.70	68	19.10	85	-22
1,1-Dichloroethene	V		20.00	15.00	75	18.10	90	-19 >14
1,1-Dichloroethane	V		20.00	17.70	88	18.80	94	-6
Trans-1,2-Dichloroethene	V		20.00	16.10	80	18.00	90	-11
Cis-1,2-Dichloroethene	V		20.00	16.80	84	16.70	84	1
2,2-Dichloropropane	V		20.00	17.10	86	18.00	90	-5
Bromochloromethane	V		20.00	17.20	86	17.60	88	-2
Chloroform	V		20.00	17.80	89	17.60	88	1
1,2-Dichloroethane	V	7.94	20.00	17.50	48	16.90	45	6
2-Butanone	V	8.47	20.00	25.00	83	24.00	78	6
1,1,1-Trichloroethane	V		20.00	17.50	88	16.60	83	5
Carbon Tetrachloride	V		20.00	16.70	84	17.10	86	-2
1,1-Dichloropropene	V		20.00	16.20	81	16.10	80	1
Bromodichloromethane	V		20.00	17.10	86	16.40	82	4
1,2-Dichloropropane	V		20.00	16.90	84	15.90	80	6
Dibromomethane	V		20.00	17.90	90	15.70	78	13
Trans-1,3-Dichloropropene	V		20.00	15.70	78	14.40	72	9
Trichloroethene	V		20.00	17.60	88	16.50	82	6
Dibromochloromethane	V		20.00	16.60	83	15.90	80	4
1,2-Dibromoethane	V		20.00	17.50	88	15.70	78	11
1,1,2-Trichloroethane	V		20.00	17.40	87	15.60	78	11
1,3-Dichloropropane	V		20.00	17.00	85	15.50	78	9
Benzene	V		20.00	16.70	84	16.10	80	4
cis-1,3-Dichloropropene	V		20.00	15.80	79	15.00	75	5
Bromoform	V		20.00	18.00	90	16.90	84	6
2-Hexanone	V		20.00	18.00	90	15.70	78	14
4-Methyl-2-Pentanone	V		20.00	19.60	98	16.60	83	17
Tetrachloroethene	V		20.00	17.60	88	16.60	83	6
1,1,2,2-Tetrachloroethane	V		20.00	17.60	88	16.90	84	4
1,1,1,2-Tetrachloroethane	V		20.00	17.80	89	16.90	84	5
Toluene	V	1.41	20.00	17.70	81	17.60	81	1
Chlorobenzene	V		20.00	17.20	86	17.30	86	-1
Ethylbenzene	V		20.00	16.10	80	16.20	81	-1

WATER MATRIX SPIKE / MATRIX SPIKE DUPLICATE RECOVERY

CASE NO HWD-127A LABORATORY MANCHESTER LAB CONTRACT AGDD3A
SAS NO 1011 REPORTED 07/03/91 08:31 CUSTOMER EPA-BAILEY

COMPOUND	TYPES	CONC SAMPLE	CONC SPIKED	CONC MS	% REC	CONC MSD	% REC	RPD
Styrene	V		20.00	16.00	80	16.40	82	-2
Bromobenzene	V		20.00	17.20	86	17.40	87	-1
1,2,3-Trichloropropane	V		20.00	16.00	80	16.00	80	0
2-Chlorotoluene	V		20.00	17.40	87	17.60	88	-1
4-Chlorotoluene	V		20.00	17.50	88	17.10	86	2
Total Xylenes	V		12.00	9.44	~~79~~ 80	9.84	~~82~~ 81	~~-4~~ 1
1,2,4-Trimethylbenzene	V		20.00	16.70	84	16.60	83	1
Tert-Butylbenzene	V		20.00	16.20	81	16.30	82	-1
1,3,5-Trimethylbenzene	V		20.00	16.20	81	15.90	80	2
Sec-Butylbenzene	V		20.00	15.50	78	15.90	80	-3
p-Isopropyltoluene	V		20.00	16.20	81	15.90	80	2
Butylbenzene	V		20.00	16.60	83	16.00	80	4
1,2-Dibromo-3-chloropropane	V		20.00	19.80	99	18.60	93	6
1,2,3-Trichlorobenzene	V		20.00	22.50	112	20.40	102	10
Isopropylbenzene	V		20.00	16.10	80	16.10	80	0
Propylbenzene	V		20.00	16.50	82	16.70	84	-1
Total Xylenes	V		40.00	32.30	~~81~~	32.40	~~81~~	0
1,3-Dichlorobenzene	V		20.00	17.90	90	17.70	88	1
1,4-Dichlorobenzene	V		20.00	18.30	92	18.10	90	1
1,2-Dichlorobenzene	V		20.00	17.40	87	17.60	88	-1
1,2,4-Trichlorobenzene	V		20.00	21.10	106	19.20	96	9
Naphthalene	BV		20.00	25.00	125	19.70	98	24
Hexachlorobutadiene	V		20.00	18.10	90	18.30	92	-1

Notes and summary data for this report.
% REC = (MS - SAMPLE) / SPIKE * 100
RPD = (MS - MSD) / ((MS + MSD) / 2) * 100
Underlined values are outside of QC limits.

Recovery: Base/Neutrals outside QC limits: 0 of 1

RPD: Base/Neutrals outside QC limits: 0 of 1