IDD 9518
10-1-99
FF#3B

FURNACE #4 SLURRY POT TANK SYSTEM

FIRST AND SECOND PASS SLURRY POTS

V-4213 & V-4214

DESIGN ASSESSMENT AND CERTIFICATION

IN ACCORDANCE WITH

CODE OF FEDERAL REGULATIONS

TITLE 40

PART 265, SUBPART J, SECTION 265.191

FMC CORPORATION
PHOSPHOROUS CHEMICAL DIVISION
POCATELLO, IDAHO
POINT OF GENERATION PROJECT

USEPA RCRA
3001103

FURNACE #4 SLURRY POT TANK SYSTEM
FIRST AND SECOND PASS SLURRY POTS

V-4213 & V-4214

DESIGN ASSESSMENT AND CERTIFICATION

IN ACCORDANCE WITH
CODE OF FEDERAL REGULATIONS

TITLE 40
PART 265, SUBPART J, SECTION 265.191

FMC CORPORATION
PHOSPHOROUS CHEMICAL DIVISION
POCATELLO, IDAHO
POINT OF GENERATION PROJECT

TABLE OF CONTENTS

	Page
1. TANK SYSTEM DESCRIPTION	**1**
2. TANK SYSTEM DESIGN ASSESSMENT	**1**
2.1 WASTE STREAM CHARACTERISTICS	**1**
2.2 MATERIALS OF CONSTRUCTION	**2**
2.2.1 Piping Materials	
2.2.2 Tank Materials	
2.3 TANK DESIGN	**3**
2.4 DESIGN INTEGRITY ANALYSIS	**4**
2.5 LEAK TEST	**5**
3. SECONDARY CONTAINMENT	**5**
4. TANK AUXILIARY EQUIPMENT	**5**
4.1 TANK DISCHARGE PUMP	**5**
4.2 TANK RECIRCULATION PUMP	**5**
4.3 TANK MIXER/AGITATOR	**6**
5. CERTIFICATION OF DESIGN ASSESSMENT (PARA 270.11(D))	**7**

APPENDICES

APPENDIX 1 WASTE CHARACTERISTICS
MATERIAL SAFETY DATA SHEETS

APPENDIX 2 SLURRY POT ANALYSIS
INDEPENDENT SLURRY POT CALCULATIONS

APPENDIX 3 INSPECTION REPORTS
ULTRASONIC INSPECTION REPORTS
SLURRY POT LEAK TEST REPORTS
API LEAK TEST PROCEDURE

APPENDIX 4 PIPING SYSTEM
PIPING STANDARDS & SPECIFICATIONS

APPENDIX 5 AUXILIARY EQUIPMENT
DISCHARGE PUMP
RECIRCULATION PUMP
AGITATOR/MIXER

APPENDIX 6 SLURRY POT SYSTEM DRAWINGS
P&IDs
SLURRY POT DRAWINGS
PIPING DRAWINGS

DESIGN ASSESSMENT

1. TANK SYSTEM DESCRIPTION

V-4213 and V-4214 are the Furnace #4 First and Second Pass Slurry Pots, respectively. These slurry pots are existing, non-pressurized, carbon steel tanks which, collect furnace off gas solids and mix it with water and lime slurry producing a precipitator slurry mixture. The function of the tanks is to render any carry over phosphorus, which may be present in the offgas solid, as non-reactive. In addition, any trace metals that may also be present and are capable of going into solution are also dropped out of the mixture. Each tank is sized to contain 800 gallons (nominal) of fluid. Each pot is equipped with its own agitator, MX-4215 or MX-4216, and a recirculation pump, P-4350 or P-4351.

The slurry mixture is pumped from the slurry pots via dedicated pump P-4217 or P-4218 to either the V-3600 (off-spec slurry) or V-3700 (on-spec slurry) tanks after reaching either a predetermined density, pH level or residence time. If the precipitator slurry mixture is not capable of being pumped, it can be gravity dropped into the V-4400 sump. V-4400 sump also acts as the secondary containment for both V-4213 and V-4214.

The primary leak detection system for each slurry pot is visual detection conducted on a regularly scheduled basis. In addition, the tank is inspected, tested and maintained for integrity on a 6 to 8 month basis as determined by the service history. When a tank reaches its integrity limitations it is replaced or repaired as required. V-4213 and V-4214 tanks are estimated to have been placed into service during 1984.

2. TANK SYSTEM DESIGN ASSESSMENT

2.1 WASTE STREAM CHARACTERISTICS

A description of the characteristics for each liquid waste stream is as follows:

- SDW – Slurry Decant Water

SDW is decant water from Pond 17 which, is heated to a nominal temperature of 140° F in tank Slurry Pot Fill Water Tank, V-9360. The water contains P_4 at the solubility limit of P_4 in water (~3 ppm), and has a pH ranging from 6 – 8. SDW is the primary water supply to the slurry pot used in the mixing process with the offgas solids.

- HCW – Phossy Water, Hot Clarified, Recycle Tank T-5137 Overflow

HCW is hot clarified process water. The water contains P_4 at the solubility limit of P_4 in water (~3 ppm), and has a pH ranging from 6 – 8. The temperature of the phossy water ranges from approximately 120° F to 160° F. Suspended solids are not normally present in this waste stream. It is used as back-up water to supply the slurry pot versus the decant water normally used in the mixing process with the offgas solids.

- PWC – Phossy Water - Cold, Pond 18B

PWC is clarified pond water recycled to the plant from pond 18B. The phosphorus-bearing wastewater streams enter pond 18A where the solids are allowed to settle. The clarified water then overflows to pond 18B. PWC contains P_4 in concentrations at its solubility limit in water (~ 3 ppm) and has a pH ranging from 6.5-8. The temperature of the PWC ranges from ~ 32° F in the winter to 80° F in the summer. This water is used as gland seal for the slurry pot recycle pumps (P-4350/P-4351) and the mixer/agitators (MX-4215/MX4216). In addition, it is used as flush water for the recirculation line during maintenance operations.

- Resulting Mixed Precipitator Slurry

The Precipitator Slurry is a mixture of furnace offgas solids and water (heated slurry decant water or hot clarified phossy water) produced in the Precipitator Slurry Pots. The slurry is normally alkaline with a pH ranging from 8-12. A pH of 11.7 is the desire setpoint. Abnormal furnace upsets result in major air leakage into the furnace offgas system, causing acid formation that can lower the pH of precipitator slurry to a pH of 4. Typically the precipitator slurry contains low concentrations of elemental phosphorus (0-2500 ppm), but can reach concentrations as high as 4 percent by weight if the slurry system is operated with hot clarified phossy water and problems with the clarifier occur. The Precipitator Slurry temperature ranges from 120- 160° F and has a solid concentration normally between 11 - 20 percent by weight.

2.2 MATERIALS OF CONSTRUCTION

2.2.1 Piping Materials

All piping to and from the slurry pots meet the following FMC Engineering Piping Standards: These standards were developed to comply with the requirements of ASME/ANSI Code B31.3 "Chemical Plant and Petroleum Refinery Piping". Specific information for each standard identified is in Appendix 4.

- SDW is transported in pipe meeting FMC piping standard ES-2-3-0. The pipe material is A53-Type E or S carbon steel.

- HCW is transported in pipe meeting FMC piping standard ES-2-3-0. The pipe material is A53-Type E or S carbon steel.

- PWC is transported in pipe meeting the FMC piping standard ES-2-1-0. The pipe material is A53-Type E or S carbon steel.

- Precipitator slurry is transported in pipe meeting the FMC piping standard ES-2-31-0. The pipe material is A53 Type S, Grade B carbon steel.

2.2.2 Tank Materials

The tank is constructed out of carbon steel. This material was selected on the compatibility requirement characteristics of the worst case stream contained by the tank. This material provides acceptable strength, durability and adequate corrosion resistance to the tank.

The specifics for each tank fabrication are as follows:

- The tank shell is a 6-foot out-side to out-side diameter constructed from 3/8-inch thick carbon steel plate. The tank top and bottom are ASME flanged and dished heads fabricated to meet the shell diameter requirements. These units are also constructed from carbon steel. The amount of corrosion allowance included in the material thickness is not documented for these slurry pots.

- The tank nozzle connections are constructed of Sch. 80S carbon steel pipe A53 GR B or A106 GR B with a 150-lb. RFSO carbon steel flange.

- The tank mixer/agitator connection is manufactured from rolled 3/8-inch carbon steel plate with a 150-lb. RFSO carbon steel flange.

2.3 TANK DESIGN

The original engineer's/supplier's design information and calculations used for the construction of the slurry pot tank were not available. In an effort to demonstrate the tank integrity is sufficient for its intended service, a separate calculation was made to determine the acceptable shell thickness limitations for the tank design. Two calculations were conducted in accordance industry standards, including the guidelines outlined in the ASME Boiler and Pressure Vessel Code, Section VIII, Div 1, using FMC's design conditions for each slurry pot tank. One calculation determines the minimum acceptable shell and head thickness, the required reinforcement at the agitator mounting point, and the reinforcement requirements at the inlet and outlet connections that support the slurry pots. The second analysis was done to determine if the slurry pots could resist the stress from the support of the circulation pump. From these analyses the minimum acceptable shell thickness was determined for each of the slurry pots. These minimum values are shown in Table 1. These acceptable minimum shell thickness values are then cross-referenced with FMC's data from a regularly scheduled field analysis that measures the shell thickness of each individual pot along strategic locations of the shell. From this information, it is determined if the tank has an acceptable shell thickness to provide a level of integrity for the intended application. If the shell thickness falls below the calculated minimum thickness allowance, then repairs or replacement are required to the slurry pot.

TABLE 1 – Minimum Acceptable Shell Thickness

Slurry Pot –4213

Location	Minimum Shell Thickness
Shell	0.097 inches
Top	0.122 inches
Bottom	0.115 inches
Pump Support*	0.245 inches

Slurry Pot –4214

Location	Minimum Shell Thickness
Shell	0.097 inches
Top	0.122 inches
Bottom	0.115 inches
Pump Support*	0.220 inches

*NOTE: It is determined that the pump support minimum shell thickness has an area of influence limited to a 10-inch envelope from the gusset. All nozzle connections are outside the limits of this area. As a result, this higher minimum thickness limitation for the pump support does not apply to the remaining tank connections.

The results of these calculations have been compared to the field data measurements for the slurry pots (See Appendix 2 & 3). This comparison determined, that as of this measurement, the slurry pot tanks exhibit sufficient structural strength to ensure they will not collapse. For safety considerations, it is recommended that periodic in field material thickness evaluations be continued and that the collected data be cross referenced to the minimum acceptable shell thickness values to determine if the tank is still acceptable for operation. Should the field measurement prove otherwise, immediate and appropriate action should be taken to correct any inadequacies.

2.4 DESIGN INTEGRITY ANALYSIS

Periodic ultrasonic inspections are conducted to obtain shell thickness data which is used to predict the remaining life of the slurry pot tank. The inspections track the current shell thickness to the survey taken for the initial shell thickness. Any change due to corrosion/erosion wear is documented. From these results, the next ultrasonic inspection is scheduled, as well as, a prediction of the tank's "retirement date". FMC uses this information to track the changes in the slurry pot in order to schedule recommended maintenance, repairs or replacement. The results of the latest field investigations for these slurry pots are in Appendix 3. As previously mentioned, the examination determined that slurry pots, V-4213 and V-4214, currently have sufficient thickness which is adequate for continued operation to the next scheduled inspection.

V-4213 has an estimated 3.2-year life, as of February 2, 1999,. Based on this examination, the tank predicted retirement date is April 29, 2002. The next recommended inspection date is September 10, 2000.

V-4214 has an estimated 2.8-year life, as of February 2, 1999,. Based on this examination, the tank predicted retirement date is November 30, 2000. The next recommended inspection date is June 29, 2000.

2.5 LEAK TEST

An in-service leak test was conducted on the slurry pot tanks using a procedure similar to the recommended practice as identified in the American Petroleum Institute (API) Guide for Inspection of Refinery Equipment, Chapter VIII – Atmospheric and Low-Pressure Tanks (Appendix 3). The results of this test conducted on August 20, 1999 determined that slurry pots V-4213 and V-4214 are not leaking (Appendix 3).

3.0 SECONDARY CONTAINMENT

The V-4400 Wastewater Collection Sump acts as the secondary containment for both V-4213 and V-4214 slurry pots. V-4400 is an existing concrete sump that is lined with two layers of T316L SS diamond plate. A separate design assessment has been prepared for this sump which provides additional information on the design, construction and function of the V-4400 system.

4.0 TANK AUXILIARY EQUIPMENT

4.1 Tank Discharge Pump

Each tank is equipped with a 15 HP, 90 GPM discharge pump, P-4217 or P-4218. This pump is located on a 3" pipe line which pumps precipitator slurry, at 88 ft of head, to either the V-3600 tank or the V-3700 tank. The pump is a horizontal centrifugal slurry pump constructed of 28% chrome for the wetted parts. The shaft is constructed of stainless steel. See Appendix 5 for pump information.

4.2 Tank Recirculation Pump

Each tank is equipped with a 5 HP, 110 GPM recirculation pump, P-4350 or P-4351. This pump is located on a 3" pipeline that recirculates the precipitator slurry, at 42 ft of head. The pump is a horizontal centrifugal slurry pump constructed of 28% chrome for the wetted parts. The shaft is constructed of stainless steel. See Appendix 5 for pump information.

4.3 Tank Mixer/Agitator

Each tank is equipped with a 3 HP mixer MX-4215 or MX-4216. This mixer is a belt driven unit, which is flange connected to an 8-inch nozzle connection on the slurry pot. It enters the pot at a 45° offset angle. The mixer propeller and shaft are of steel construction. See Appendix 5 for additional information.

5. CERTIFICATION OF DESIGN ASSESSMENT (PARA 270.11(D))

Certification for Furnace # 4 Slurry Pot Tank System: V-4213 & V-4214 (as described herein)

I certify under penalty of law that this document was prepared to address the requirements as outlined in the Code of Federal Regulations Title 40, Part 265, Subpart J, Section 265.191. All attachments were gathered and examined under my direction or supervision in accordance with a system designed to assure that qualified personnel properly gather and evaluate the information submitted. Based on my inquiry of the person or persons who manage the system, or those persons directly responsible for gathering the information, the information submitted is, to the best of my knowledge and belief, true, accurate, and complete. I am aware that there are significant penalties for submitting false information, including the possibility of fine and imprisonment for knowing violations.

Signature: _____ Date: 9/27/99
Peter Critikos, P.E.

Title: Sr. Mechanical Engineer

P.E. Registration No.: 9446

Seal:

Raytheon Engineers & Constructors, Inc.
5555 Greenwood Plaza Blvd., Suite 100
Englewood, CO 80111

APPENDICES

APPENDIX 1 WASTE CHARACTERISTICS
MATERIAL SAFETY DATA SHEETS

APPENDIX 2 SLURRY POT ANALYSIS
INDEPENDENT SLURRY POT CALCULATIONS

APPENDIX 3 INSPECTION REPORTS
ULTRASONIC INSPECTION REPORTS
SLURRY POT LEAK TEST REPORTS
API LEAK TEST PROCEDURE

APPENDIX 4 PIPING SYSTEM
PIPING STANDARDS & SPECIFICATIONS

APPENDIX 5 AUXILIARY EQUIPMENT
DISCHARGE PUMP
RECIRCULATION PUMP
AGITATOR/MIXER

APPENDIX 6 SLURRY POT SYSTEM DRAWINGS
P&IDs
SLURRY POT DRAWINGS
PIPING DRAWINGS

APPENDIX 1
WASTE CHARACTERISTICS

APPENDIX 1 WASTE CHARACTERISTICS

MATERIAL SAFETY DATA SHEETS

FMC Phosphorus Chemicals Division
Pocatello

Interoffice

To Route List

Date September 19, 1989

cc Supervisor
Engineers

From W. H. Lee

Subject PROPER DESIGNATION FOR PHOSPHORUS ANALYSES

Recently, in the laboratory, we have received some rather confusing requests for phosphorus analyses. To help us serve you better, I will attempt to explain the various designations.

P_4 is solid, liquid, or gaseous white elemental phosphorus at temperatures below 800°C. Therefore, a request for % elemental P_4 or % total P_4 means the same as % P_4 or % white P_4 and the reported analytical value would be percent white elemental phosphorus. I would suggest using the designation % P_4.

P is the chemical symbol for phosphorus. A request for %P would result in a report of percent total phosphorus calculated as %P. It does not mean percent white phosphorus.

P_2O_5 is the chemical formula for the most abundant product of the chemical reaction between white phosphorus and oxygen. Because of convention, the designation %P_2O_5 means percent total phosphorus calculated as % P_2O_5. It does not represent the percent phosphorus present as P_2O_5.

PO_4^{-3} is the ortho-phosphate ion, which is the most common naturally occurring form of phosphorus. Again, because of convention, a request for %PO_4 or % total PO_4 would result in the percent total phosphorus calculated as %PO_4. However, %o-PO_4 or % ortho PO_4 means the percent phosphorus that is present as the ortho-phosphate ion.

Finally, red P means red elemental phosphorus, a very stable form of elemental phosphorus used in making matches. Should you request an analysis of % Red P, we will throw our hands up in the air and say, "We will guess with you!"

nm

W. Lee

MATERIAL SAFETY DATA 7723 14 0

PHOSPHORUS, ELEMENTAL

NFPA Designation 704

DEGREE OF HAZARD

4 = EXTREME
3 = HIGH
2 = MODERATE
1 = SLIGHT
0 = INSIGNFICANT

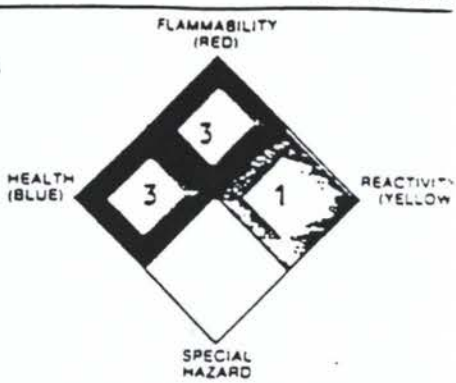

EMERGENCY TELEPHONES:
PLANT: (208) 236-8200 POCATELLO, ID
CHEMTREC: (800) 424-9300 TRANSPORTATION
MEDICAL: (303) 595-9048 ROCKY MTN

REVISION: EFFECTIVE: 10/17/85 PRINTED: 04/29/88

PREPARED FOR USE BY..... ELTON HEWITT

IDENTIFICATION

INFORMATION PROVIDED BY..: FMC CORPORATION
2000 MARKET STREET
PHILADELPHIA PA 19103

PRODUCT INFORMATION

SYNONYMS.....: WHITE PHOSPHORUS, YELLOW PHOSPHORUS
SHIPPING NAME - DOT.....: PHOSPHORUS, WHITE OR YELLOW, IN WATER
IATA.....: PHOSPHORUS, WHITE OR YELLOW, IN WATER
IMCO.....: PHOSPHORUS, WHITE OR YELLOW, IN WATER
FORMULA.....: P4
CHEMICAL FAMILY.....: PHOSPHORUS

PRECAUTIONARY INFORMATION

PRECAUTIONARY STATEMENT..:
(PLEASE USE THIS STATEMENT TO SATISFY THE IN-PLANT LABELING REQUIREMENTS OF THE OSHA HAZARD COMMUNICATIONS STANDARD 29CFR 1910.1200)

HEALTH:
CONTACT WITH SOLID OR LIQUID PHOSPHORUS CAUSES SEVERE BURNS OF SKIN AND EYES.
INHALATION OF SINGLE EXCEEDINGLY HIGH LEVELS OF VAPOR PRODUCES SEVERE LUNG IRRITATION FOLLOWED BY BUILD-UP OF FLUIDS IN LUNG.
CONTINUOUS LONG TERM INHALATION (>0.1 MG/CU. M) WILL RESULT IN CHANGES IN THE JAWBONE STRUCTURE RESULTING IN LOOSENING OF TEETH AND SEVERE PAIN AND SWELLING OF THE JAW.

PHYSICAL:
VAPOR OR LIQUID WILL IMMEDIATELY IGNITE IN AIR.
VERY REACTIVE WITH OXIDIZERS.

MATERIAL SAFETY DATA 7723 14 0

PHOSPHORUS, ELEMENTAL

NFPA Designation 704

DEGREE OF HAZARD

4 = EXTREME
3 = HIGH
2 = MODERATE
1 = SLIGHT
0 = INSIGNFICANT

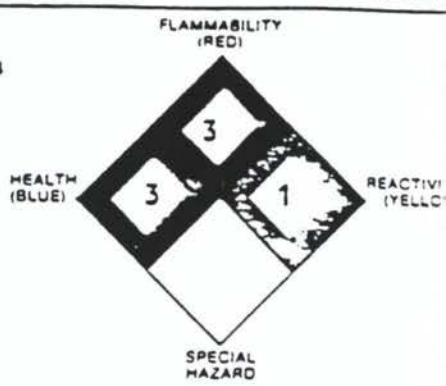

EMERGENCY TELEPHONES:
PLANT: (208) 236-8200 POCATELLO, ID
CHEMTREC: (800) 424-9300 TRANSPORTATION
MEDICAL: (303) 595-9048 ROCKY MTN

REVISION: EFFECTIVE: 10/17/85 PRINTED: 04/29/88

INGREDIENTS

CAS# AND COMPONENT.....: MATERIAL OR COMPONENT: ELEMENTAL PHOSPHORUS WHITE OR YELLOW
PERCENT : 99.9
CAS# : 7723-14-0
HAZARD CLASS : FLAMMABLE
PYROPHORIC
TOXIC

PHYSICAL DATA

MELTING POINT.....:	44.1C
BOILING POINT.....:	280C
VAPOR PRESSURE.....:	1MM @ 76.6C
VAPOR DENSITY (AIR - 1)..:	4.42
ROOM TEMPERATURE APPEARANCE AND STATE:	CUBIC CRYSTALS, COLORLESS OR YELLOW TO BLACK WAX-LIKE SOLID
ODOR.....:	SHARP, PUNGENT
SPECIFIC GRAVITY (H2O =1):	1.82 @ 20C
SOLUBILITY IN H2O % BY WT:	0.0003 @ 20C
% VOLATILES BY VOLUME....:	NOT AVAILABLE
EVAPORATION RATE (BUTYL ACETATE = 1).:	NOT AVAILABLE
PH (AS IS).....:	NOT APPLICABLE
PH (1% SOLUTION).....:	NOT APPLICABLE

FIRE, EXPLOSION AND REACTIVITY DATA

FLASH POINT.....:	IGNITES SPONTANEOUSLY IN AIR
AUTOIGNITION TEMPERATURE.:	86F (30C)
FLAMMABLE LIMITS UPPER..:	NOT KNOWN
(AIR) LOWER..:	APPROX. 3PPM BY VOL
EXTINGUISHING MEDIA.....:	WATER, WATER FOG, FOAM, DIRT, SAND
SPECIAL FIREFIGHTING.....: PROCEDURES	DELUGE WITH WATER, TAKING CARE NOT TO SCATTER, UNTIL FIRE IS EXTINGUISHED AND PHOSPHORUS HAS SOLIDIFIED, THEN COVER WITH WET SAND OR DIRT.

MATERIAL SAFETY DATA 7723 14 0

PHOSPHORUS, ELEMENTAL

NFPA Designation 704

DEGREE OF HAZARD

4 = EXTREME
3 = HIGH
2 = MODERATE
1 = SLIGHT
0 = INSIGNFICANT

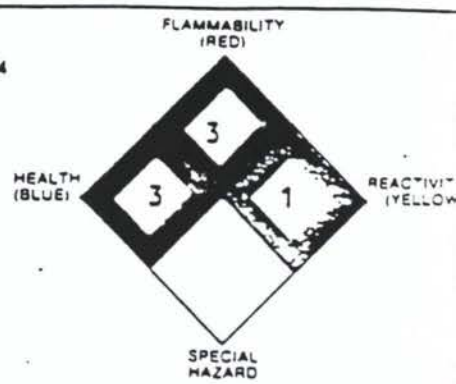

EMERGENCY TELEPHONES:
PLANT: (208) 236-8200 POCATELLO, ID
CHEMTREC: (800) 424-9300 TRANSPORTATION
MEDICAL: (303) 595-9048 ROCKY MTN

REVISION: EFFECTIVE: 10/17/85 PRINTED: 04/29/88

FIRE, EXPLOSION AND REACTIVITY DATA

DEGREE OF FIRE AND EXPLOSION HAZARD	DANGEROUS WHEN EXPOSED TO HEAT OR BY CHEMICAL REACTION WITH OXIDIZERS. IGNITES SPONTANEOUSLY IN AIR. VERY REACTIVE.
STABILITY	STABLE
HAZARDOUS POLYMERIZATION	WILL NOT OCCUR
CONDITIONS TO AVOID	AVOID CONTACT WITH AIR, OXIDIZING MATERIALS.
MAJOR CONTAMINANTS THAT CONTRIBUTE TO INSTABILITY	NONE
INCOMPATIBILITY	AIR, OXIDIZING MATERIALS, ALKALINE HYDROXIDES, HALOGENS AND NITRATES.
HAZARDOUS DECOMPOSITION PRODUCTS	EMITS HIGHLY TOXIC FUMES OF POX. PHOSPHINE, A FLAMMABLE, TOXIC GAS, CAN BE GENERATED WHEN PHOSPHORUS CONTACTS OXIDIZING AGENTS OR WHEN THE PHOSPHORUS WATER COVER IS ALLOWED TO REACH A PH OVER 6.5 AT A TEMP. OF 85C. A PHOSPHINE POLYMER CAN ALSO EXIST IN PHOSPHORUS SO PHOSPHINE MAY ALWAYS BE PRESENT.

ROUTES OF EXPOSURE

EYE CONTACT	SEVERE OCULAR DAMAGE MAY RESULT SOURCE: SAX DATE 1979
SKIN CONTACT	CAUSES SEVERE AND PAINFUL BURNS SOURCE: PATTY DATE: 1981 SOURCE: DANGEROUS PROPERTIES OF INDUSTRIAL MATERIALS - SAX DATE: 1979
SKIN ABSORPTION	MODERATELY HAZARDOUS LD50 (RAT) = 100 MG/KG SOURCE: SAX DATE: 1979
INHALATION	THRESHOLD LIMIT VALUE: AIR 0.1 MG/CU. M SOURCE: ACGIH DATE: 1984 OSHA STANDARD, AIR TWA 0.1 MG/CU. M SOURCE: NIOSH DATE: 1980 HIGHLY TOXIC (LC50 <2MG/L)
INGESTION	EXTREMELY HAZARDOUS LDLO (HUMAN) = 1.4 MG/KG SOURCE: NTIS DOCUMENT AD 778-725 DATE: 1974

PHOSPHORUS, ELEMENTAL

NFPA Designation 704

DEGREE OF HAZARD
4 = EXTREME
3 = HIGH
2 = MODERATE
1 = SLIGHT
0 = INSIGNFICANT

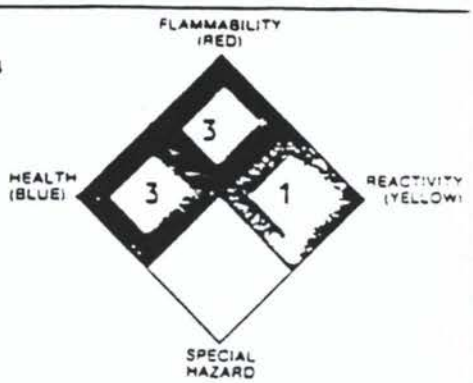

EMERGENCY TELEPHONES:
PLANT: (208) 236-8200 POCATELLO, ID
CHEMTREC: (800) 424-9300 TRANSPORTATION
MEDICAL: (303) 595-9048 ROCKY MTN

REVISION: EFFECTIVE: 10/17/85 PRINTED: 04/29/88

EFFECTS OF OVEREXPOSURE

ACUTE EXPOSURE.....: SOLID OR LIQUID CAUSES SEVERE BURNS OF SKIN. IF INGESTED CAUSES NAUSEA, VOMITING, JAUNDICE, LOW BLOOD PRESSURE, DEPRESSION, DELIRIUM, COMA, DEATH. SYMPTOMS AFTER INGESTION OR INHALATION MAY BE DELAYED FOR FROM A FEW HOURS TO 3 DAYS. A CHARACTERISTIC GARLIC ODOR MAY BE PRESENT ON BREATH OR VOMITUS.

CHRONIC EXPOSURE.....: A FORM OF GENERALIZED WEAKNESS, ACCOMPANIED BY ANEMIA, LOSS OF APPETITE, GASTROINTESTINAL COMPLAINTS, CHRONIC COUGH AND PALLOR HAS BEEN REPORTED TO BE DUE TO SYSTEMIC PHOSPHORUS POISONING. THE MOST COMMON FORM OF CHRONIC POISONING ALSO CAUSES CHANGES IN THE LONG BONES. SERIOUSLY AFFECTED BONES MAY BECOME BRITTLE, LEADING TO SPONTANEOUS FRACTURES. INDUSTRIALLY, NECROSIS OF THE BONE IS SEEN ONLY IN THE JAWBONES. IN SUCH CASES, THE FIRST SYMPTOMS ARE USUALLY TOOTHACHE AND EXCESSIVE SALIVATION, FOLLOWED BY THE LOOSENING OF ONE OR MORE TEETH AND SEVERE PAIN AND SWELLING OF THE JAW. A SUPPURATIVE ULCERATION DEVELOPS IN THE GUMS AROUND THE TOOTH OR TOOTH SOCKET WHICH MAY INVADE THE BONE ITSELF. THERE IS A GRADUAL PROGRESSION OF THE PROCESS UNTIL MOST OF THE AFFECTED BONE IS INVOLVED. IN EXTREME CASES SEVERE FACIAL DEFORMITY MAY RESULT.

EMERGENCY AND FIRST AID PROCEDURES

EYES.....: WASH EYES COPIOUSLY WITH WATER AT LEAST 15 MINUTES. EYELIDS SHOULD BE HELD APART DURING IRRIGATION. KEEP EYES WET WITH WATER UNTIL AN EYE SPECIALIST IS IN ATTENDANCE.

SKIN.....: IMMEDIATELY FLUSH WITH COPIOUS WATER. IF PHOSPHORUS REMAINS IMBEDDED IN THE SKIN, THE CONTAMINATED AREAS SHOULD BE SUBMERGED IN WATER. VISIBLE PIECES OF PHOSPHORUS SHOULD BE REMOVED.

MATERIAL SAFETY DATA 7723 14 0

'PHORUS, ELEMENTAL

NFPA Designation 704

DEGREE OF HAZARD
4 = EXTREME
3 = HIGH
2 = MODERATE
1 = SLIGHT
0 = INSIGNFICANT

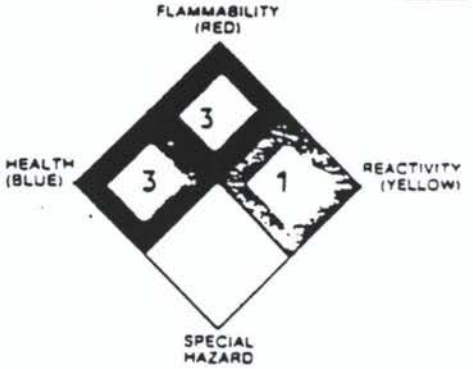

EMERGENCY TELEPHONES:
PLANT: (208) 236-8200 POCATELLO, ID
CHEMTREC: (800) 424-9300 TRANSPORTATION
MEDICAL: (303) 595-9048 ROCKY MTN

REVISION: EFFECTIVE: 10/17/25 PRINTED: 04/29/88

EMERGENCY AND FIRST AID PROCEDURES

INHALATION.....: REMOVE VICTIM IMMEDIATELY TO FRESH AIR. IF BREATHING HAS STOPPED, PERFORM ARTIFICIAL RESPIRATION. CALL A PHYSICIAN.

INGESTION.....: CALL A PHYSICIAN IMMEDIATELY. AVOID CONTACT FROM VOMITUS OR OTHER BODY FLUIDS, SINCE THEY MAY CONTAIN PHOSPHORUS THAT CAN CAUSE BURNS OF EYES AND SKIN. IF THE VICTIM IS CONSCIOUS INDUCE VOMITING BY GIVING LARGE QUANTITIES OF WATER TO DRINK AND HAVING THE PERSON TOUCH BACK OF THROAT WITH HIS FINGER. DO NOT ATTEMPT TO MAKE AN UNCONSCIOUS PERSON VOMIT.

DECONTAMINATION PROCEDURE: KEEP WETTED OR IMMERSED IN WATER UNTIL ALL VISIBLE PHOSPHORUS PICKED OFF AND FLUSHED AWAY.

NOTES TO PHYSICIAN.....: IMMEDIATE GASTRIC LAVAGE WITH 4 LITERS OF POTASSIUM PERMANGANATE (1:5000 OR 2 PERCENT HYDROGEN PEROXIDE FOLLOWED BY ACTIVATED CHARCOAL) SHOULD BE PERFORMED. MINERAL OIL OR PETROLATUM BY MOUTH OR GAVAGE HAS BEEN USED TO PREVENT ABSORPTION AND HASTEN ELIMINATION; A DOSE OF 200-250 ML INITIALLY AND FOLLOWED BY 30 ML EVERY 3 HOURS FOR 48 HOURS IS GIVEN. MAGNESIUM OR SODIUM SULFATE CATHARTICS MAY BE INDICATED, IF NO GI BLEEDING OR DIARRHEA IS PRESENT. TREATMENT IS SYMPTOMATIC AND SUPPORTIVE, WITH ATTENTION TO SHOCK, ACIDOSIS, BLOOD LOSS, CARDIAC ARRHYTHMIAS, SEIZURES, INITIALLY AND HEPATIC AND RENAL FAILURE LATER.

SPECIAL PROTECTION

VENTILATION REQUIREMENTS.: NOTHING SPECIAL ASSUMING PROPER CONTAINMENT OF PHOSPHORUS AT ALL TIMES. USE SELF CONTAINED BEATHING APPARATUS, IF VAPOR IS EXPECTED.

RECOMMENDED PERSONAL.....: SEE BELOW.
PROTECTIVE EQUIPMENT
RESPIRATORY.....: WEAR NIOSH/MSHA APPROVED SELF-CONTAINED BREATHING APPARATUS, NEAR BURNING PHOSPHORUS.

Chemical Safety Data Sheet SD-16

PROPERTIES AND ESSENTIAL INFORMATION

FOR

SAFE HANDLING AND USE

OF

PHOSPHORUS, ELEMENTAL

Chemicals in any form can be safely stored, handled or used if the physical, chemical and hazardous properties are fully understood and the necessary precautions, including the use of proper safeguards and personal protective equipment, are observed.

REVISED 1976

MANUFACTURING CHEMISTS ASSOCIATION

1825 CONNECTICUT AVENUE, N. W. WASHINGTON, D. C. 20009

Chemical Safety Data Sheet

PHOSPHORUS

PREFACE

Phosphorus, elemental, is a solid material at ambient temperatures that ignites spontaneously in air and burns vigorously. It is classified as a flammable solid by Department of Transportation regulations.

Due to its low melting point, 44.1°C (111°F), bulk quantities are usually shipped in a molten form, covered with water, inert gas, or a combination of both.

Phosphorus will cause severe burns on contact with the body or eyes. When burning in air, it emits large volumes of acrid white fumes which are very irritating when breathed.

The full text of this chemical safety data sheet should be consulted for details of the hazards of phosphorus and recommendations for their control.

FIRST AID—SEE PAGE 11

For assistance in the event of any emergency involving this chemical in transportation, call MCA's **Chemical Transportation Emergency Center.**

CHEMTREC

(800) 424-9300 * *(Use 483-7616 in District of Columbia)*

Toll-free, day or night

* Use long distance access number if required.

In CANADA, call Canadian Chemical Producers Association's TEAP (Transportation Emergency Assistance Plan)

TABLE OF CONTENTS

	Page
Introduction	
1. **NAME**	5
2. **PROPERTIES**	5
2.1 Grade and Strength	5
2.2 Important Physical and Chemical Properties	5
3. **TRAINING AND JOB SAFETY**	6
3.1 Employe Education and Training	6
3.2 Safety Review	6
4. **HEALTH HAZARDS—MEDICAL MANAGEMENT, FIRST AID, AND PROTECTIVE EQUIPMENT**	6
4.1 Health Hazards	6
4.2 Medical Management	7
4.3 First Aid	7
4.4 Personal Protective Equipment	8
5. **FIRE HAZARDS, FIRE FIGHTING**	9
5.1 Fire Hazards	9
5.2 Fire Fighting	9
6. **INSTABILITY, REACTIVITY HAZARD AND CONTROL**	9
6.1 Instability Hazards	9
6.2 Reactivity Hazards	9
7. **ENGINEERING CONTROL OF HAZARDS**	9
7.1 Building Design	9
7.2 Equipment Design	9
7.3 Ventilation	10
7.4 Electrical Equipment	10
8. **SHIPPING, LABELING, HANDLING**	10
8.1 Storage	10
8.2 Labeling and Identification	10
8.3 Non-Bulk Containers	12
8.4 Bulk Transport	12
8.5 Shipping	13
9. **WASTE DISPOSAL GUIDELINES AND SPILL CONTROL**	13
10. **TANK AND EQUIPMENT CLEANING AND REPAIRS**	13
10.1 Preparation for the Job	13
10.2 Preparation of the Tank or Equipment	13
10.3 Tank Entry	14
10.4 Emergency Rescue	14
10.5 Cleaning and Repairs to Tank and Equipment	14

Chemical Safety Data Sheet

PHOSPHORUS

1. NAME

Chemical Name:	Phosphorus
Common Name:	Phosphorus, white phosphorus, yellow phosphorus
Formula:	P_4

2. PROPERTIES

2.1 GRADE AND STRENGTH

Elemental white or yellow	99.9% (Amorphous (red) phosphorus is not covered in this data sheet)

2.2 IMPORTANT PHYSICAL AND CHEMICAL PROPERTIES

Physical	Waxy solid
Ignition Temperature	Spontaneously ignites in air
Boiling Point	280.5°C (536.9°F)
Color	Colorless to pale yellow to deep straw (in solid form under water it is chalky white)
Corrosivity	None in absence of air (See 5.2 Reactivity Hazards)
Deliquesence—Hygroscopicity	None
Heat of Combustion	5.9 kilocalories per gram
Heat of Fusion	5.0 calories per gram
Heat of Vaporization	101 calories per gram
Light Sensitivity	Turns red in sunlight
*Melting Point	44.1°C (111°F)
Odor	Mildly characteristic (phossy). Fumes from burning phosphorus are pungent, sharp.
Reactivity	Dangerously so in air or with oxidizing agents (See 5.2 Reactivity Hazards)
Specific Gravity	
at 20°C (68°F) Water	1.8231
at 25°C (77°F) Water	1.8198
at 50°C (122°F) Water	1.737
Solubility in H_2O	0.003% at 20°C (68°F)
Specific Heat	0.19 at 7°C (44.6°F) to 30°C (86°F)
**Thermal Expansion	3.5% at melting point
Vapor Density	(Air = 1) 4.42
Viscosity	1.694 centipoise (pure), 0.967 (saturated with water) at 50°C (122°F)
Threshold Limit Value	0.1 mg/m³ 1974—ACGIH, American Conference of Governmental Industrial Hygienists

* Liquid phosphorus must be super cooled to 39.1°C (102°F) to solidify completely without leaving a liquid core.

** *Caution*—Phosphorus covered with a thin layer of water can shrink away from the sides of the tank car upon solidification, thus draining the water cover from the surface of the phosphorus, leaving it exposed.

3. TRAINING AND JOB SAFETY

3.1 EMPLOYE EDUCATION AND TRAINING

3.1.1 Safe handling of phosphorus depends largely upon the effectiveness of employe education, proper operating procedures, the use of safe equipment and diligent supervision.

3.1.2 This data sheet contains pertinent material that should be included in the employe training activity. Additionally the MCA publications of Case Histories of Accidents in the Chemical Industry provide details of accidents and injuries involving phosphorus that may be useful.

3.1.3 Employes should be instructed in the hazards of this chemical. Speed in stopping the combustion of phosphorus is of primary importance. First-aid treatment should be started at once in all cases of contact with phosphorus, in any form, or serious injury may result. Skin exposure requires the immediate immersion of the affected area in water followed by medical attention. Contaminated clothing should be removed immediately, preferably while showering. Eye exposure requires immediate decontamination with plain water at an eye bath for at least 15 minutes, followed by medical attention.

3.1.4 Employes should shower daily on finishing work. Food should not be stored or eaten near the place where phosphorus is handled. Any abnormal condition of the jaw or mouth should be reported immediately.

3.2 SAFETY REVIEW

For continued safe operation it is important for supervision to execute a thorough process review at regular intervals. For maximum effectiveness, this review should cover all aspects of the operation and should include the participation of selected representatives of operations, maintenance, technical and any other related activities. The MCA publication, "Guidelines for Risk Evaluation and Loss Prevention in Chemical Plants (1970)" may be helpful.

4. HEALTH HAZARDS—MEDICAL MANAGEMENT, FIRST AID, AND PROTECTIVE EQUIPMENT

4.1 HEALTH HAZARDS

Phosphorus ignites spontaneously when exposed to air and contact with the skin or clothing may cause severe burns. If combustion takes place in a confined space, oxygen may be consumed below a safe breathing level. Moderate concentrations of the vapors from burning phosphorus are irritating to the eyes, nose, throat and lungs.

If phosphorus is taken by mouth, it is absorbed from the gastrointestinal tract. It can also be absorbed from the lungs. In the modern utilization of phosphorus in industry, the principal mode of exposure is by inhalation. It is possible that the absorption of the lower oxides might produce edema of the lungs.

After the absorption of a sufficient amount of phosphorus, acute toxic effects are produced in the liver and are accompanied by vomiting and marked weakness. The long continued absorption of phosphorus may result in necrosis of the mandible or maxilla (jawbone) and is known as "phossy jaw."

Phosphine (PH_3) is a highly flammable toxic foul-smelling gas. It may be present in phosphorus as a polymer or generated at low rates at a temperature of 85°C (185°F) and with the water at a pH of 6.5. As the pH of the water increases, the rate of phosphine generation increases. Phosphine, which has a characteristic odor of rotten onions or decaying fish, has a Threshold Limit Value (TLV) of 0.3 ppm. Phosphine can ignite spontaneously in air.

4.1.1 Warning Properties

Elemental phosphorus has no strong warning properties (See 2. Properties—Odor).

4.1.2 Acute Toxicity

4.1.2.1 *Local Effects*

Phosphorus, when in contact with air spontaneously ignites and burns freely and will cause severe local tissue burns if it contacts the skin. Combustion of phosphorus on the skin results in the formation of meta- and ortho-phosphoric acid and small amounts of red phosphorus. These compounds are of no importance clinically, as the heat coagulation of the tissues is the important effect of phosphorus burns. A firm scab is produced and is surrounded by blisters.

Phosphorus is especially hazardous to the eyes and produces severe damage.

4.1.2.2 *Systemic Effects*

4.1.2.2.1 *Phosphorus*

The absorption of phosphorus when taken by mouth may be delayed as much as 2 hours. In a

few hours after ingestion there is an initial stage of local gastrointestinal irritation characterized by nausea, vomiting and severe abdominal pain. The vomitus may have a garlic-like odor and may be phosphorescent (luminous in the dark.)

After 24 to 36 hours, the symptoms subside. After a few hours, or a few days, nausea, vomiting and abdominal pain reappear with diarrhea and abdominal tenderness. The skin becomes jaundiced. The toxic state lasts 2 to 15 days, averaging 8 days. In fatal cases, most deaths occur within 4 to 5 days. The fatal dose is generally about 100 mg, but even 15 mg may produce a severely toxic reaction.

Absorption of phosphorus through the skin following severe burns may produce systemic toxicity.

4.1.2.2.2 *Phospine*

When low concentrations are inhaled, phosphine may cause headache, dizziness, tremors, general fatigue, burning substernal pain, nausea, vomiting and diarrhea. A productive cough with a fluorescent-green sputum, acute dyspnea and pulmonary edema may develop. Death is usually preceded by tonic convulsions which may occur suddenly after the patient has apparently recovered.

Phosphine's characteristic decayed fish odor is barely detectable at concentrations of 1.5 to 3 ppm. Serious effects are produced following exposure to 5 to 10 ppm for several hours. Death occurs following ½ to 1 hour exposure to concentrations of 400 to 600 ppm.

4.1.3 Chronic Toxicity

Chronic poisoning occurs from long continued absorption of phosphorus especially through the lungs but also through the gastrointestinal tract.

A form of generalized weakness, accompanied by anemia, loss of appetite, gastrointestinal complaints, chronic cough and pallor has been reported to be due to systemic phosphorus poisoning. The most common form of chronic poisoning also causes changes in the long bones. Seriously affected bones may become brittle, leading to spontaneous fractures. Industrially, necrosis of the bone is seen only in the jawbones. In such cases, the first symptoms are usually toothache and excessive salivation, followed by the loosening of one or more teeth and severe pain and swelling of the jaw. A suppurative ulceration develops in the gums around the tooth or tooth socket which may invade the bone itself. There is a gradual progression of the process until most of the affected bone is involved. In extreme cases severe facial deformity may result.

The chronic effects produced by phosphine are essentially the same as those produced by phosphorus.

4.2 MEDICAL MANAGEMENT

4.2.1 Physical Examinations

4.2.1.1 *Preplacement Physical Examinations*

Preplacement medical examinations should be directed toward eliminating from exposure to phosphorus those workers with any evidence of history of liver disease and those workers with any of the following dental defects: gingivitis, pyorrhea, carious teeth, exposed sockets and dental cysts. Absence of all natural teeth is no contraindication.

4.2.1.2 *Periodic Examinations*

An annual physical examination should be given to each employe who is frequently exposed to phosphorus. He should be instructed to report any illness he experiences.

4.2.1.3 *Dental Examinations*

Periodic dental examinations are particularly indicated in those who work with phosphorus. The frequency of these examinations is dependent upon the type and degree of exposure. The examination interval therefore may vary from once a year to as frequent as once a month. Undesirable dental conditions should be corrected and the employe should not be allowed to work around phosphorus until the condition has been properly treated. Full mouth dental x-rays should be made before employment. This should be repeated at the discretion of the dentist.

4.3 FIRST AID

4.3.1 General Principles

Speed in stopping the combustion of phosphorus is of primary importance and, secondly, the removal of the material from contact with the skin. First-aid treatment should be started at once in all cases of contact with phosphorus in any form or serious injury may result. Refer all injured persons to qualified personnel even when the injury appears to be slight.

4.3.2 Contact with Skin

Immediate application of water to the area will stop combustion of the phosphorus. This may be accomplished by plunging the affected parts in water or by the copious use of running water. Contaminated clothing should be removed promptly. If available, ice water will help relieve pain and help minimize severity of burn. The area should be irrigated for at least 30 minutes. If small particles of phosphorus are adherent to the skin, they can be seen in a darkened area as they are luminous. The small particles of phosphorus can be removed with tweezers while the part is immersed in water.

It should be borne in mind that following severe burns, and particularly in those involving a large area of the body surface, shock may appear at any time. Shock should be treated promptly. No oil or ointment of any kind should be applied to burned areas without the sanction of the attending physician.

CAUTION: It should be remembered that the phosphorus stops burning after the application of water but when the area dries, due to the evaporation of water, the phosphorus will spontaneously ignite again. Drying may be prevented by covering the area with a cloth wet with water. The phosphorus must be removed as soon as possible.

A physician should be called at the earliest possible moment.

4.3.3 Contact with Eyes

If even minute quantities of phosphorus, either in solid form or in solution, enter the eyes they should be irrigated immediately and copiously with water for a minimum of 15 minutes. The eyelids should be held apart during the irrigation to ensure contact of water with all the tissues of the surface of the eyes and lids. A physician, preferably an eye specialist, should be called in attendance at the first possible moment. If a physician is not immediately available, the eye irrigation should be continued until the services of a physician are available.

Ophthalmologists may be interested in a method of treatment for chemical burns of the eye described by Ralph S. McLaughlin, "Chemical Burns of the Human Cornea," American Journal of Ophthalmology, 29: 1355, 1946.

4.3.4 Ingestion

If phosphorus is swallowed, either in a paste or as "phossy water," a physician should be called immediately. The patient should be made to vomit at once. If necessary, stick finger down the throat to cause vomiting. Repeated vomiting should be encouraged by giving large quantities of fluids. The injurious results of absorption may not occur for a matter of hours, therefore, gastric washing should be carried out whenever a patient is seen. There is no established antidote. Do not give oily cathartics; avoid fatty foods, including milk.

NEVER GIVE ANYTHING BY MOUTH OR ATTEMPT TO CAUSE VOMITING IN AN UNCONSCIOUS PATIENT.

4.3.5 Inhalation

Burning phosphorus in a confined area may cause a depletion of the oxygen from the air to a sufficient extent to cause asphyxiation. The patient should be removed at once to fresh air and effective artificial respiration initiated immediately if breathing has ceased. A physician should be called at once.

4.4 PERSONAL PROTECTIVE EQUIPMENT

4.4.1 Availability and Use

Personal protective equipment cannot be considered as a substitute for tight controls in the handling of phosphorus. The potential risk of contact with phosphorus dictates the need for an adequate supply of approved personal protective equipment be provided and prescribed use enforced.

4.4.2 Eye Protection

Whenever the danger of contact with phosphorus is present, full eye and face protection should be worn. This can best be provided by chemical safety goggles with impact resistant glass or plastic lenses and a full length face shield. A full chemical hood which completely covers the head, face and neck may also be considered.

Approved spectacle-type safety glasses are recommended as minimum eye protection for other work areas.

4.4.3 Respiratory Protection

Entry into bins, hoppers and vessels in phosphorus related operations presents a potential exposure to toxic vapors of phosphorus, phosphine, flouride, carbon monoxide, etc. Unless thorough air sampling indicates the atmosphere is free of toxic vapor and that an adequate oxygen level is assured, maximum respiratory protection in the form of self-contained breathing equipment or a supplied air breathing system should be worn.

In other open work areas where minimal respiratory protection may be indicated, a chemical cartridge-type respirator may suffice.

4.4.4 Head Protection

Approved safety hats should be worn where there is an exposure to head injury.

4.4.5 Foot Protection

Leather or rubber safety shoes with built-in steel toe caps are recommended for workers in all phosphorus related work areas. High top styles are preferred.

4.4.6 Body, Skin and Hand Protection

Because phosphorus ignites in air, contact with the skin may result in very serious burns. Where a potential exposure to phosphorus exists such as opening a line, a protective suit with hood offers ideal protection. However, protective coats, trousers, boots and gloves offer good body protection. The head and face should then be protected by safety hat, chemical goggles and face shield.

Protective suits exposed to phosphorus should be washed immediately with water to remove phosphorus particles.

5. FIRE HAZARDS, FIRE FIGHTING

5.1 FIRE HAZARDS

Phosphorus ignites spontaneously in air and burns vigorously. Fires can be controlled by covering with water, sand, or earth to exclude the air. Foam extinguishers may also be used. Avoid the use of high pressure water streams.

5.2 FIRE FIGHTING

Phosphorus ignites spontaneously upon exposure to air and emits clouds of white acrid fumes. Self-contained breathing equipment is recommended for fire fighting activities.

Large spills of phosphorus should be restricted by damming with earth or sand. A shallow layer of water on the surface of burning phosphorus will effectively extinguish the fire. Water application should be made as softly as possible. High pressure streams scatter molten phosphorus with each of the small particles burning violently. Water application regardless of pressure, should use fog or spray nozzles to provide gentle application. Dry chemical extinguishers are relatively ineffective. Foam extinguishers can be used to bring a spill fire under control.

A leak from a phosphorus line or tank can often be controlled by applying a cooling stream of water at the leak to chill and solidify the liquid phosphorus. Solid phosphorus unless covered with water, sand or earth to exclude the air will slowly melt, and ignite.

Fire hydrants and hose stations should be distributed so that spill fires may be approached from an upwind position.

Except in small confined spaces the use of steam on phosphorus fires should be avoided because it tends to spread the fire and does not aid in cooling the phosphorus.

6. INSTABILITY, REACTIVITY HAZARD AND CONTROL

6.1 INSTABILITY HAZARDS—None

6.2 REACTIVITY HAZARDS

When exposed to air, phosphorus ignites spontaneously and burns vigorously. Phosphine, a flammable, toxic gas, can be generated when phosphorus contacts oxidizing agents or when the phosphorus water cover is allowed to reach a pH over 6.5 at a temperature of 85°C (185°F). A phosphine polymer can also exist in phosphorus so phosphine may always be present. Phosphine can ignite spontaneously.

Hydrogen has also been known to be present above a phosphorus surface. If the phosphorus water cover is allowed to drop below 5.5 pH, the steel container may be attacked chemically and lead to hydrogen generation.

The phosphorus water cover should be controlled between a 5.5-6.5 pH range for maximum safety.

7. ENGINEERING CONTROL OF HAZARDS

7.1 BUILDING DESIGN

Since the production of elemental phosphorus involves operations which create carbon monoxide, phosphine, smoke, dust, molten slag and metal—structures, particularly the furnace plant should be designed to allow as much natural ventilation as possible. To obtain more effective ventilation it may be necessary to provide a fume removal system.

7.2 EQUIPMENT DESIGN

7.2.1 Since elemental phosphorus ignites spontaneously upon exposure to air, it is essential that it be contained or handled in closed systems and stored under a water cover.

7.2.2 Storage tanks may be constructed of concrete or of welded steel without bottom or side outlets.

7.2.2.1 Above grade storage tanks should be placed in retaining basins, also constructed of concrete or of welded steel, without bottom or side outlets.

7.2.2.2 The basins should be large enough to retain the full contents of the tanks or tanks with an allowance for water coverage. Basins should be cleaned periodically of accumulated dirt to retain their original design capacities.

7.2.2.3 Water lines should be installed to the retaining basins to permit flooding.

7.2.2.4 Sealed tanks should be equipped with frangible discs or safety valves and seals set to release at a predetermined pressure. An ample safety factor should be allowed to protect the tank itself. Discharge from these devices should be directed into a retaining basin.

7.2.2.5 Storage tanks should be equipped with heating coils for either hot water or steam.

7.2.3 To avoid corrosion at the water line, all pipe lines should be equipped with non-corrosive sections at those points where the pipes enter the liquid.

7.2.3.1 The pipe used to carry phosphorus being pumped or transferred, should be jacketed with hot water or steam traced to prevent freezing of the phosphorus, and should be installed to allow for expansion and contraction.

7.2.3.2 Pipe lines for phosphorus should be sloped to the outlet to allow maximum drainage. A warm water connection should be made to flush out the lines after use.

7.2.4 Plug or ball valves (all steel) are preferable to other types. Flange shields are suggested for protection in case of gasket failure. Where possible, all connections to valves or tanks should be of the welded flange type. Valves should be hot water jacketed or steam traced.

7.3 VENTILATION

Good ventilation is essential in all phosphorus handling operations. Building design and equipment layout should take full advantage of natural ventilation. However, it may be necessary to provide mechanical ventilation at sources of dusts, fumes and vapors to ensure that a safe atmosphere is being maintained.

7.3.1 Routine air sampling of the work environment for phosphorus * and other potential contaminants, such as phosphine, carbon monoxide and sulfur dioxide is recommended to ensure the adequacy and effectiveness of the ventilation systems and other engineering controls.

7.4 ELECTRICAL EQUIPMENT

General purpose electrical installations are normally used in phosphorus production areas.

* A gas chromatic method of detecting 0.004 mg of elemental phosphorus per cubic meter of air has been developed by C. D. Bohl and E. F. Kaelble and reported in American Industrial Hygiene Association Journal, Volume 34, pp. 306-309. Determination of Elemental Phosphorus in Air by Gas Chromatography, 1973.

8. SHIPPING, LABELING, HANDLING

8.1 STORAGE

8.1.1 Phosphorus is stored under water. In contact with water certain gaseous compounds are formed, and minute particles detach themselves from the main body of the phosphorus which oxidize in the cover water and slowly acidify it. The temperature of the cover water is a factor in the acidification. The process will in time corrode the container above the phosphorus level. The pH of the cover water should be periodically checked for acidity. When the acidity is below pH 5.5, the cover water should be neutralized to pH range 5.5-6.5 with lime, ammonia or soda ash. Tests show that a pH up to 6.5 is a safe limit for alkalinity to avoid the evolution of phosphine. Dry soda ash should never be dumped into the water since this could result in the formation of high pH around the soda ash particles which greatly increases the evolution of phosphine. Soda ash should be dissolved in hot water and the solution pumped into the water and thoroughly mixed.

8.1.2 Storage tanks should be remote from congested areas. Personnel traffic should be restricted to essential workers only.

8.1.3 Mechanical ventilation should be provided where phosphorus is stored or handled inside buildings.

8.2 LABELING AND IDENTIFICATION

8.2.1 DOT Labeling and Identification *

8.2.1.1 Each container shall be marked with the proper shipping name "Phosphorus, white or yellow, dry" or "Phosphorus, white or yellow, in water" per DOT 173.401(a).

8.2.1.2 Outside shipping containers, except bulk containers, must bear the "Flammable Solid" label as described in DOT 173.410.

8.2.1.3 Tank cars and other cars containing one or more containers of phosphorus must bear the DANGEROUS placard per DOT 174.541 (a)(1), (2), (3) and tank cars previously loaded with phosphorus, when shipped filled with water or inert gas, must bear the "Caution—Residual Phosphorus" placard per DOT 174.555.

8.2.1.4 Tank motor vehicles, whether loaded or empty, and other motor vehicles transporting phosphorus, white or yellow, dry or wet, in any quantity of 1000 pounds or more, must be placarded FLAMMABLE per DOT 177.823 (a)(1), (2), (3) and (b) (1).

* DOT Regulations should be checked for changes.

8.2.2 Precautionary Labeling

The Manufacturing Chemists Association recommends that all containers of phosphorus, white or yellow, in water should bear a label as shown. The text is designed for the product as shipped for industrial use. It should be used in addition to or in combination with any specific wording required by law. Since individual statutes, regulations or ordinances may require that particular information be included

PHOSPHORUS
White or Yellow
(For Shipment Under Water)

DANGER! EXTREMELY FLAMMABLE
CATCHES FIRE IF EXPOSED TO AIR
CAUSES SEVERE BURNS
MAY BE FATAL IF SWALLOWED OR INHALED

Contents packed under water and will ignite if water is removed.

Do not get in eyes, on skin, on clothing.

Do not breathe vapor.

Wear heavy protective gloves, goggles, and face shield.

Keep container closed.

Use only with adequate ventilation.

Wash thoroughly after handling.

POISON
Call a Physician

FIRST AID:

In Case of Contact, immediately flush skin or eyes with plenty of water for at least 15 minutes while removing contaminated clothing and shoes. Keep skin area wet until medical attention is obtained. Wash clothing before reuse.

If Swallowed, induce vomiting by sticking finger down throat or by giving soapy water to drink. Repeat until vomit fluid is clear. Never give anything by mouth to an unconscious person.

If Inhaled, remove to fresh air. If not breathing give artificial respiration, preferably mouth-to-mouth. If breathing is difficult, give oxygen.

In Case of: Fire, Spill, or Leak—Cover with water, sand, or earth.

in a label, that certain information be displayed in a particular manner, or that a specific label be affixed to a container, the use of this label will not necessarily ensure compliance with such laws. Such laws include the Federal Hazardous Substances Act; Federal Insecticide, Fungicide and Rodenticide Act; and similar state and municipal legislation.

8.3 NON-BULK CONTAINERS

Phosphorus, white or yellow, is classified by the DOT as a Flammable Solid. As such it must be packed in DOT specification containers when shipped by rail, water, or highway and all DOT regulations governing loading, handling and labeling must be followed.

8.3.1 Type and Size

Authorized containers for phosphorus, white or yellow, are indicated in DOT 173.190. Special reference is made to shipments by rail express. The usual containers used for this commodity are as follows:

8.3.1.1 Phosphorus, white or yellow, wet (shipped under water).

8.3.1.1.1 DOT Spec. 15A or 15B. Wooden boxes with inside containers which must be hermetically sealed (soldered) metal cans, enclosed in other hermetically sealed (soldered) metal cans; or hermetically sealed (soldered) metal cans containing not over 1 pound each, enclosed in other watertight metal cans with screw-top closures; or hermetically sealed (soldered) metal cans enclosed in hermetically sealed (soldered) metal boxlining, DOT Spec. 2F.

8.3.1.1.2 DOT Spec. 5A, 6A, or 6B. Metal barrels or drums, not over 30 gallons capacity each.

8.3.2 When phosphorus is shipped or received in drums, care should be taken to see that all fittings are tight.

8.3.3 The plug in the bung opening should be loosened to prevent rupture of the drum before the material is heated to the proper temperature, i.e., above 44°C (111°F) and below 55°C (131°F), preferably to about 52°C (126°F) before applying water to displace the material.

8.4 BULK TRANSPORT

8.4.1 General

8.4.1.1 Loading and unloading operations should be conducted by fully trained, reliable employes under diligent supervision.

8.4.1.2 Loading and unloading stations should be equipped with emergency showers or tubs of water for emergency immersion of personnel who have come in contact with phosphorus.

8.4.1.3 See that the car or truck is spotted accurately and that the track or road is level. Preferably, loading and unloading operations should be conducted in limited personnel access areas and posted "Authorized Personnel Only."

8.4.1.4 The hand-brake should be set and standard chocks or rail clamps should be installed to block the wheels at the time of loading or unloading.

8.4.1.5 Shipper's instructions for unloading should always be followed and all precautionary markings on both sides of tank or dome should be read and observed.

8.4.1.6 Personnel engaged in connecting, loading or unloading lines or sampling should wear protective clothing (See 4.4 Personal Protective Equipment).

8.4.1.7 In the event of a leak in the tank car or tank truck or the fittings that cannot be stopped by following the instructions from the supplier (which may include a suggestion to play a stream of low pressure cold water on the leak point and through the external coils to freeze the phosphorus) or by simple adjustment or tightening, immediately contact the shipper or MCA CHEMTREC—800-424-9300 for further instructions.

8.4.1.8 Damage Enroute. In case a tank car or tank truck becomes damaged enroute so that it cannot proceed safely to its destination, every effort should be made to park it where it will not endanger people, traffic, or property. The police and fire department should be notified and public warned to stay away. If a leak or spill is involved, follow MCA Chem-Card precautions as available or *contact* shipper or MCA CHEMTREC—800-424-9300 for safe disposal instructions.

8.4.2 Tank Trucks

DOT Spec. MC 310, MC 311, or MC 312. Tank motor vehicles, without bottom outlet and with insulation at least 4 inches in thickness, except that 2 inches of insulation is authorized for tanks equipped with an exterior heating jacket. Interior heating coils are not authorized. The material must be immersed in water or be blanketed with an inert gas and be loaded at a temperature not exceeding 60°C (140°F). After unloading, the tank must be filled to its entire capacity with an inert gas or to its entire capacity with water having a temperature not exceeding 60°C (140°F) or a combination of water and inert gas.

Trucks should have their wheels chocked and jack stands are recommended for trailer support if tractor is removed.

8.4.3 Tank Cars

8.4.3.1 Derails should be placed on the unloading track approximately one car length from the

car being unloaded, unless the car is protected by a closed and locked switch or gate.

8.4.3.2 Metal "CAUTION" signs should be fastened to the track. Signs should be 12"x15", painted light blue. Use the legent "STOP—TANK CAR CONNECTED," with the letters in "STOP" four inches high. Signs are available from safety equipment dealers.

8.4.3.3 DOT Spec. 103, 103W, 111A60-F-1, 111A60-W-1, 111A100-W-1, 111A100-W-3. Tank cars without bottom outlet for discharge of lading and with approved dome fittings, external heater systems, and with insulation at least 3 inches in thickness, except that thickness of insulation may be reduced to 2 inches over external heater coils. Bottom wash-out nozzle of approved design may be applied. Approved clean-out nozzles may be applied to top of tanks to aid in cleaning. These are usually 10 inch I.D. nozzles closed with a bolted blind flange. The material must be immersed in water or be blanketed with an inert gas and be loaded at a temperature not exceeding 60°C (140°F). In cars DOT Spec. 103 and 103-W, the water must be loaded in the dome to not more than 50 percent of the capacity of the dome. In cars DOT Spec. 111A60-F-1, 111A60-W-1, 111A100-W-1, 111A100-W-3 which are without domes, the outage is in the tank shell. Cars without domes must not be loaded to more than 98 percent of shell capacity with phosphorus. The water cover should be adjusted to 99 percent of the shell capacity. Inert gas of appropriate pressure or a combination of gas and water may be used. After unloading, the tank must be filled to its entire capacity with an inert gas or its entire capacity with water at a temperature not exceeding 60°C (140°F). If unloading domeless cars fill with water to 99 percent of the shell capacity or an appropriate amount of inert gas or a combination of both. The unloaded car must be placarded with a caution placard described in DOT sect. 174.555 before being offered for return movement. See DOT Hazardous Material Tariff Section 174.562-66, Section 174.584(F), and 197.202-5 for placarding, billing, and special requirements in addition to Section 173.190.

8.5 SHIPPING

8.5.1 Phosphorus, white or yellow, wet (under water) shipped by rail express must be shipped in DOT Spec. 15A or 15B wooden boxes with inside containers which must be hermetically sealed (soldered) metal cans, containing not over 1 pound each, enclosed in other water-tight metal cans with screw-top closures, or with soldered closures. This method is also authorized for rail, highway, and water shipments.

8.5.2 Phosphorus, white or yellow, dry must be cast solid and shipped in DOT Spec. 6A, 6B, 6C metal barrels or drums not over 30 gallons capacity each.

8.5.3 Phosphorus, white or yellow, dry must not be shipped by rail express.

8.5.4 Unloading areas should be well supplied with tubs of water or emergency showers and eye baths which are easily accessible and plainly marked.

9. WASTE DISPOSAL GUIDELINES AND SPILL CONTROL

9.1 Discarding phosphorus, and materials contaminated with it, is not generally permissible. Contact with the supplier or a waste disposal company is suggested.

9.2 "Phossy water" must meet effluent standards before allowing it to flow out of the plant.

9.3 Solid or pasty residues may be burned subject to air emission standards.

10. TANK AND EQUIPMENT CLEANING AND REPAIRS

10.1 PREPARATION FOR THE JOB

The hazardous nature of tank inspection, cleaning, or repairs requires that the foreman and crew be selected, trained, and drilled carefully. They should be fully familiar with the hazards, and the safeguards necessary for the safe performance of the work.

10.2 PREPARATION OF THE TANK OR EQUIPMENT

Cleaning or making repairs inside a tank may be hazardous even though the tank contained a non-toxic, non-flammable material or even after the tank has been cleaned of toxic or flammable material.

10.2.1 Flush tank with hot water one or more times as needed. Water temperature should be at least 60°C (140°F) for flushing; however some phosphorus handlers use water temperatures as high as 90°C (194°F). Remove the phosphorus water but leave enough to barely cover the residue in the tank. Then add four to six inches of the coldest water available, in order to chill any remaining phosphorus or solid residue in the bottom of the tank.

10.2.2 Run water into the cooling coils of the tank twelve to sixteen hours before the tank is entered. The cooling water should be left on during the entire cleaning operation.

10.2.3 Wherever possible, tanks or vessels should be cleaned from the outside, through clean-out openings.

10.2.4 Pipe lines into or out of the tank or other apparatus should be disconnected, preferably by removing a complete small section, and providing a blank flange on the open end to protect against human error and unsuspected leaks. Valves, cocks, and blank flanges in the pipe line should not be relied upon.

10.2.5 Danger signs should be placed suitably to indicate when workmen are in the tank or other apparatus.

10.2.6 The portable electric lights and power tools should be in good condition and grounded. Low voltage lights are recommended.

10.3 TANK ENTRY

10.3.1 Be sure the tank can be left by the original entrance.

10.3.2 Lock electrical switches in the off position, remove drive belts, and otherwise completely safeguard against accidentally starting the agitating equipment or other moving parts located inside or adjacent to the tank entrance.

10.3.3 Before entering a tank and during the course of the work, tests should be made by a qualified person to determine that no further washing is necessary, that no oxygen deficiency exists and that no harmful gases are present.

10.3.4 The person entering the tank *must wear self-contained or supplied air breathing equipment at all times while in the tank*, together with rescue harness life line and wearing proper personal protective equipment.

10.3.5 One person in the tank at a time usually makes better progress than several. This is also considered safer, as it minimizes fouling of the air hose and life line with the piping or other equipment in the tank. The men should work in relays.

10.4 EMERGENCY RESCUE

10.4.1 Another person provided with the same equipment should be on guard at all times that worker(s) are in the tank. He should keep the man or men in the tank under constant observation. At least two men should be available to aid in rescue if it becomes necessary.

10.4.2 A water hose with a control valve at the outlet should be in a ready position to protect the man in the tank.

10.5 CLEANING AND REPAIRS TO TANK AND EQUIPMENT

10.5.1 When first entering the tank it will be noted that some burning has occurred on the walls leaving deposits of acid. The acid should be washed down into the water to prevent injury to the worker and damage to the equipment.

10.5.2 When the tank is cooled, all solids above the frozen phosphorus should be removed by means of a bucket. Then the solid phosphorus under the water in the bottom of the tank may be chipped and broken up with a chisel-pointed bar. The small pieces of phosphorus should be placed under water in a bucket to prevent burning and the generation of vapor.

10.5.3 Extreme care should be taken in removing buckets not to spill any material on the person in the tank.

APPENDIX 2
SLURRY POT ANALYSIS

APPENDIX 2 SLURRY POT ANALYSIS

INDEPENDENT SLURRY POT CALCULATIONS

Calculation M-101, Slurry Pot Recirculation Pump Support Bracket, 1/26/95, Rev 0

Calculation V-2214-VESSEL, Vessel Design/Analysis for 6'-0" Dia Slurry Pots, including V-1213/14, V-2214, V-3213/14, and V-4213/14, based on FMC Design Criteria and Drawings; 9/13/99, Rev 0.

Please Note:

Calculation, V-2214-Vessel, was conducted to determine the acceptable shell thickness limitations for the slurry pot tank design. This calculation was done specifically for slurry pot vessel V-2214. This slurry pot is has a 6' – 0" out-side-to-outside diameter and a seam –to-seam dimension of 2'-10 ¼". This slurry pot represents the worst case design of all the slurry pots with a 6' – 0" out-side-to-outside diameter but have smaller seam-to-seam dimensions. Therefore, the results determined in this calculation are applicable to the following 6' – 0" out-side-to-outside diameter slurry pots:

V-1213, seam-to-seam dimension: 2'-8"
V-1214, seam-to-seam dimension: 2'-8"
V-3213, seam-to-seam dimension: 2'-8"
V-3214, seam-to-seam dimension: 2'-8"
V-4213, seam-to-seam dimension: 2'-6"
V-4214, seam-to-seam dimension: 2'-8"

This calculation was conducted in accordance industry standards, including the guidelines outlined in the ASME Boiler and Pressure Vessel Code, Section VIII, Div 1, using FMC's design conditions for each slurry pot tank.

The calculation determines the minimum acceptable shell and head thickness, the required reinforcement at the agitator mounting point, and the reinforcement requirements at the inlet and outlet connections that support the slurry pots.

From this analysis the minimum acceptable shell thickness was determined for the slurry pots.

Raytheon Engineers & Constructors	CALCULATION SUMMARY & CONTROL SHEET	CALCULATION SET NO. V-2214 - VESSEL

PRELIM.	FINAL	VOID	REVISION
✓			

Sheet 1 of 2

CLIENT: FMC

PROJECT TITLE:

DISCIPLINE: MECHANICAL

PROJECT NO: 96096.088

SUBJECT: SLURRY POTS OF DIFFERENT FURNACES

COMPLETED BY	CHIEN S. HSU	DATE	8-16-99
CHECKED BY	C. Thomas Lotko	DATE	9/13/99
APPROVED BY	C. Thomas Lotko	DATE	9/13/99

REVISION SUMMARY:

PROFESSIONAL ENGINEER REGISTERED 7667 9/13/99 STATE OF IDAHO C. THOMAS LOTKO II

TOTAL NUMBER OF SHEETS IN THIS ISSUE 105
SHEETS REVISED, ADDED, OR DELETED

PROBLEM STATEMENT:

VESSEL DESIGN/ANALYSIS FOR 6'-0" DIA. SLURRY POTS, INCLUDING V-1213/14 V-2214, V-3213/14, & V-4213/14, BASED ON FMC DESIGN CRITERIA & DRAWINGS.

NOZZLE REINFORCEMENT CALCULATIONS.

LOCAL STRESS ANALYSIS DUE TO EXTERNAL LOADS:

1. N1, AGITATOR MOUNTING NOZZLE, DUE TO AGITATOR LOADS.
2. N7, DRAIN, DUE TO PIPING LOADS.
3. N2, INLET, DUE TO VESSEL OPERATING WEIGHT & SEISMIC LOADS.

RESULTS & CONCLUSIONS:

VESSEL SHELL & HEAD THICKNESS ARE ADEQUATE FOR INTERNAL & EXTERNAL PRESSURE.

NOZZLE REINFORCEMENT ARE ADEQUATE.

NOZZLE DESIGN ARE ADEQUATE FOR EXTERNAL LOADS.

Raytheon Engineers & Constructors	**CALCULATION SUMMARY & CONTROL SHEET**	CALCULATION SET NO. V-2214-VESSEL

PRELIM.	FINAL	VOID	REVISION
V			

Sheet 2 of 2

CLIENT FMC

PROJECT TITLE

DISCIPLINE MECHANICAL

PROJECT NO 96096.088

DESIGN BASIS & ASSUMPTIONS:

DESIGN PRESSURE : 10 PSIG (INTERNAL), 1.8 PSIG (EXTERNAL)
DESIGN TEMPERATURE : 328 °F
CORROSION ALLOWANCE : 1/8"
MATERIALS OF CONSTRUCTION : PLATE - SA-516-70, PIPE - SA-106B/SA-53B
EXTERNAL LOADS: N1 (MIXER) : 750 LB (SHEAR), 1875 FT-LB (BENDING)
N7 (DRAIN) : 2200 LB (TENSION), 1150 FT-LB (BENDING)

UNVERIFIED ASSUMPTIONS/OPEN ITEMS:

STATIC LOADS ONLY. DYNAMIC OR CYCLIC LOADS WILL NOT BE CONSIDERED AND/OR EVALUATED.

REFERENCES:

ASME BOILER AND PRESSURE VESSEL CODE SECTION VIII, DIVISION 1, LATEST ED.
WELDING RESEARCH COUNCIL BULLETIN 107, LOCAL STRESSES IN SPHERICAL AND CYLINDRICAL SHELLS DUE TO EXTERNAL LOADINGS
UBC CODE LATEST EDITION.

ATTACHMENTS (INCLUDING NUMBER OF PAGES):

FMC DRAWING # 300143 REV. 1, 1 PAGE
NOZZLE SCHEDULE, 1 PAGE

COMPUTER PROGRAM DISCLOSURE INFORMATION:

PROGRAM USED (NAME):	REV NO. / ISSUE DATE	RE&C VERIFIED	REMARKS/NUMBER OF PAGES
PVDP		☒ YES ☐ NO	103 PAGES

CHECKED BY [signature] DATE 9/13/99

RUN BY Chian Hsu DATE 8-16-99

CALCULATION SUMMARY

TABLE OF CONTENTS

1. VESSEL DESIGN, PAGES 1 TO 20
2. NOZZLE REINFORCEMENT (N1), PAGES 21 TO 26
3. NOZZLE REINFORCEMENT (N2), PAGES 27 TO 32
4. NOZZLE REINFORCEMENT (N3), PAGES 33 TO 38
5. NOZZLE REINFORCEMENT (N4), PAGES 39 TO 44
6. NOZZLE REINFORCEMENT (N5), PAGES 45 TO 50
7. NOZZLE REINFORCEMENT (N6), PAGES 51 TO 54
8. NOZZLE REINFORCEMENT (N7), PAGES 55 TO 60
9. NOZZLE REINFORCEMENT (N8), PAGES 61 TO 66
10. NOZZLE REINFORCEMENT (M1), PAGES 67 TO 72
11. LOCAL STRESS ANALYSIS (N1), PAGES 73 TO 82
12. LOCAL STRESS ANALYSIS (N7), PAGES 83 TO 92
13. LOCAL STRESS ANALYSIS (N2), PAGES 93 TO 103
14. ATTACHMENT 1, FMC DRAWING #300143, 1 PAGE
15. ATTACHMENT 2, NOZZLE SCHEDULE, 1 PAGE

VESSEL DESIGN

++

..... Pressure Vessel Design Pro Corp. .....

Houston Tx

++

- File name & design pressures (# 1)

File name	= V2214
Cust. name	= FMC
P.O. no.	= 96096.088
Item no.	= V-2214
S/o no.	=
Des. name	= CS HSU
Vess. name	= NO.2 FURNACE 2ND PASS SLURRY POT
Units (E/M)	= E
Mode desired (D/A)	= D
Spc'l requirements	=
Int. press.	= 10
Int. temp.	= 328
Ext. press.	= 1.8
Ext. temp.	= 328

- Liquid levels & flange rating (# 2)

Liq. level #1	= 3.25
Spec. grav.	= 1.13
Liq. level #2	=
Spec. grav.	=
Liq. level #3	=
Spec. grav.	=
Inp. platf/noz (Y/N)	= Y
Ref. file name	= V2214NZ
Flange mat.	= SA 105
Flange rating	= 150
M.A.P. (N&C)	= 285
M.A.W.P. (Des.)	= 221.6

- Wind (# 3)

Wind (Y/N)	= N
Code (ANSI/ASCE/UBC)	=
82/88/91/93/94/95/97	=
Exposure (A/B/C/D)	=
Wind speed	=
Factor Kzt/0	=
Shape factor/Cq/0	=
Factor I/0	=
Gust factor Gh/0	=

++

..... Pressure Vessel Design Pro Corp. .....

Houston Tx

++

Seismic & Weight factors (# 4)

Seismic (Y/N) = Y
Code (ANSI/ASCE/UBC) = UBC
88/91/93/94/95/97/Sf = 97

Seismic zone (0-4) = 2 (ZONE 3 - THIS DOES NOT IMPACT THE VESSEL
Factor Z/Ac/Ca/0 = 0 OR NOZZLE DESIGNS. HAND CALCS. FOR THE
Factor I/Av/Ip/0 = 0 SUPPORTING NOZZLE USE ZONE 3 ∴ RERUNNING
Factor K/Cc/Aa/0 = 0 THIS PROGRAM IS NOT NECESSARY. C.T.)
Factor S/P/Fa/0 = 0
Factor Rw/R or 0 = 0

Input Weights (Y/N) = N
Ship/Empty wt factor = 1/1.1
Oper. wt factor = 1

- Bed packing (# 5)

Bed height (#1) =
Pack. wt. =
Elev. =
Elev. =
Liq. hold up (%) =
Liq. spec. grav. =

Bed height (#2) =
Pack. wt. =
Elev. =
Elev. =
Liq. hold up (%) =
Liq. spec. grav. =

- Additional vertical loads (# 6)

Vert. load #1 = 800
Ecc. mom. arm = 5.25
Dist. from base = 0
Dist. from base = 0

Vert. load #2 = 700
Ecc. mom. arm = 4
Dist. from base = 4
Dist. from base = 1

Vert. load #3 =
Ecc. mom. arm =
Dist. from base =
Dist. from base =

```
+++++++++++++++++++++++++++++++++++++++++++++++++++++++++++++++++++++++++++++++
          .......... Pressure Vessel Design Pro Corp. ..........
                                  Houston Tx
+++++++++++++++++++++++++++++++++++++++++++++++++++++++++++++++++++++++++++++++
```

Additional horizontal loads (# 7)

Hor. load #1 =
Dist. from base =
Dist. from base =

Hor. load #2 =
Dist. from base =
Dist. from base =

Hor. load #3 =
Dist. from base =
Dist. from base =

- Insulation/Eff. dia./Vess. type/Vess. length & size/Grade elev. (# 8)

Insulation thk. = 0

Eff. dia. or 0 = 0

Vess. type (ID/OD) = OD

Vess. size = 72
Vess. length = 3
Vess. length = 1

Mat. req. (Y/N) = N

Grade-btm. base = 0

- Bottom head material & thickness (# 9)

Btm. hd. mat. = SA 516 70
Allow. stress (N&C) = 17500
Allow. stress (Des) = 17500
Yield strength (N&C) = 38000
Mod. elasticity (Des) = 2.872E+07
Joint eff. (%) = 70
Corr. allow. = .0625
Head thk. = .25
Factor B =
Btm. hd. type (1-5) = 2
Knuckle rad. = 4.5
Dish rad. = 72
Head rad./Dia. @ Se =
Head depth/Cone lgth. = 12

```
++++++++++++++++++++++++++++++++++++++++++++++++++++++++++++++++++++++++++++++++++++++++++++++
          .......... Pressure Vessel Design Pro Corp. ..........
                                  Houston Tx
++++++++++++++++++++++++++++++++++++++++++++++++++++++++++++++++++++++++++++++++++++++++++++++

- Top head material & thickness  ( # 10 )

Top hd. mat.          = SA 516 70
Allow. stress (N&C)   = 17500
Allow. stress (Des)   = 17500
Yield strength (N&C)  = 38000
Mod. elasticity (Des) = 2.872E+07
Joint eff. (%)        = 70
Corr. allow.          = .0625
Head thk.             = .25
Factor B              =
Top hd. type (1-5)    = 2
Knuckle rad.          = 4.5
Dish rad.             = 72
Head rad./Dia. @ Se   =
Head depth/Cone lgth. =

- Shell material & thickness  ( # 11 )

Sh. material          = SA 516 70
Allow. stress (N&C)   = 17500
Allow. stress (Des)   = 17500
Yield strength (N&C)  = 38000
Mod. elasticity (Des) = 2.872E+07
Joint eff. (%)        = 70
Corr. allow.          = .0625
Shell thk.            = .25
Factor B              =

Ship. wt.             =
Empty wt.             =
Oper. wt.             =
Test wt.              =

- Support lug/Anchor bolt material & Lug elevation  ( # 12 )

No. of lugs           = 0

Tl.-Btm. base         =
Tl.-Btm. base         =

Lug material          =
Allow. stress (N&C)   =
Allow. stress (Des)   =
Yield strength (Des)  =
Mod. elasticity (Des) =
Corr. allow.          =

Anchor bolt mat.      =
Allow. stress (Tens)  =
```

Bearing pressure & Bolt/Base plate/Top lug/Bearing surface dimensions (# 13)

Bearing press. =
Anchor des. (1/2/3) =
No. of bolts =
Bolt dia. =
Bolt circ. dia. =

Base pl. thk. =
Base pl. width =
Base pl. proj. =

Bearing surface =

Top lug thk. =
Top lug proj. =

- Gusset/Weld/Reinforced pad/Stiffener dimensions (# 14)

Gusset thk. =
Gusset length =
Gusset proj. @ top =

d thk. @ lugs =

With reinf. pad (Y/N) =
Pad thk. =
Pad width =
Pad length =

With stiffeners (Y/N) =
Stiff. thk. =
Stiff. width =

- Vessel stiffeners (# 15)

Stiff. size #1 =
Stiff. width =
No. of stiff. =
Stiff. spacing =
Stiff. spacing =
Aver. spacing =

Sect. length =
Sect. length =
Sect. OD =
Sect. thk. =

r fig. no. =
tor B =

```
*****************************************************************************
          .......... Pressure Vessel Design Pro Corp. ..........
                                Houston Tx
*****************************************************************************
```

External press. calc. & Name plate stamping & Calc. reports (# 16)

Ext. press. calc.	=
+1/3 top hd. (Y/N)	= Y
+1/3 btm hd. (Y/N)	= Y
M.A.P. (N&C)	= 48
M.A.W.P. (Des)	= 34
Hydro test press.	= 73
Calc. report output	=
Int. press. (Y/N)	= Y
Ext. press. (Y/N)	= Y
Lugs design (Y/N)	= N

..... Pressure Vessel Design Pro Corp. .....
Houston Tx

- Nozzle (# 1)

Nozz. mark = N1 (AGITATOR)
Nozz. size (in.) = 15
Rating (150-2500) = 150
Nozz. type (1-3) = 1
With blind (Y/N) = N
Hinge/Davit (H/D) =

Elev. (ft) or (T/B) = 3
Elev. (in.) = 0
Orientation (deg.) =
Nozz. proj. (Cv-FF) =

Nozz. wt. (lbs.) = 284
Reinf. file name =

- Nozzle (# 2)

Nozz. mark = N2 (INLET)
Nozz. size (in.) = 14
Rating (150-2500) = 150
Nozz. type (1-3) = 1
With blind (Y/N) = N
Hinge/Davit (H/D) =

Elev. (ft) or (T/B) = T
Elev. (in.) =
Orientation (deg.) =
Nozz. proj. (Cv-FF) =

Nozz. wt. (lbs.) = 226
Reinf. file name =

- Nozzle (# 3)

Nozz. mark = N3 (FOG CONNECTION)
Nozz. size (in.) = 6
Rating (150-2500) = 150
Nozz. type (1-3) = 1
With blind (Y/N) = N
Hinge/Davit (H/D) =

Elev. (ft) or (T/B) = T
Elev. (in.) =
Orientation (deg.) =
Nozz. proj. (Cv-FF) =

Nozz. wt. (lbs.) = 59
Reinf. file name =

..... Pressure Vessel Design Pro Corp. .....
Houston Tx

- Nozzle (# 4)

Nozz. mark = N4 (PE CONNECTION)
Nozz. size (in.) = 4
Rating (150-2500) = 150
Nozz. type (1-3) = 1
With blind (Y/N) = N
Hinge/Davit (H/D) =

Elev. (ft) or (T/B) = 2
Elev. (in.) = 5
Orientation (deg.) =
Nozz. proj. (Cv-FF) =

Nozz. wt. (lbs.) = 39
Reinf. file name =

- Nozzle (# 5)

Nozz. mark = N5 (PUMP SUCTION)
Nozz. size (in.) = 3
Rating (150-2500) = 150
Nozz. type (1-3) = 2
With blind (Y/N) = N
Hinge/Davit (H/D) =

Elev. (ft) or (T/B) = 2
Elev. (in.) = 4
Orientation (deg.) =
Nozz. proj. (Cv-FF) =

Nozz. wt. (lbs.) = 27
Reinf. file name =

- Nozzle (# 6)

Nozz. mark = N6 (PUMP DISCHARGE)
Nozz. size (in.) = 2
Rating (150-2500) = 150
Nozz. type (1-3) = 2
With blind (Y/N) = N
Hinge/Davit (H/D) =

Elev. (ft) or (T/B) = 2
Elev. (in.) = 6
Orientation (deg.) =
Nozz. proj. (Cv-FF) =

Nozz. wt. (lbs.) = 16
Reinf. file name =

..... Pressure Vessel Design Pro Corp. .....
Houston Tx

Nozzle (# 7)

Nozz. mark = N7 (DRAIN)
Nozz. size (in.) = 10
Rating (150-2500) = 150
Nozz. type (1-3) = 1
With blind (Y/N) = N
Hinge/Davit (H/D) =

Elev. (ft) or (T/B) = B
Elev. (in.) =
Orientation (deg.) =
Nozz. proj. (Cv-FF) =

Nozz. wt. (lbs.) = 123
Reinf. file name =

- Nozzle (# 8)

Nozz. mark = N8 (OUTLET)
Nozz. size (in.) = 4
Rating (150-2500) = 150
Nozz. type (1-3) = 1
With blind (Y/N) = N
Hinge/Davit (H/D) =

Elev. (ft) or (T/B) = B
Elev. (in.) =
Orientation (deg.) =
Nozz. proj. (Cv-FF) =

Nozz. wt. (lbs.) = 39
Reinf. file name =

- Nozzle (# 9)

Nozz. mark = M1
Nozz. size (in.) = 22
Rating (150-2500) = 150
Nozz. type (1-3) = 1
With blind (Y/N) = Y
Hinge/Davit (H/D) = H

Elev. (ft) or (T/B) = 3
Elev. (in.) = 4
Orientation (deg.) =
Nozz. proj. (Cv-FF) =

Nozz. wt. (lbs.) = 978
Reinf. file name =

****

PRESSURE VESSEL DESIGN PRO CORP.
HOUSTON TX

****

----- INTERNAL PRESSURE -----

CUSTOMER NAME : FMC

P.O. NO. : 96096.088

ITEM NO. : V-2214 S/O NO. :

VESS. NAME : NO.2 FURNACE 2ND PASS SLURRY POT

DESIGNER NAME : CS HSU DATE : 08-13-1999

****

72 OD X 3 ft. 1 in. TL-TL

----> DESIGN DATA <----

DES. PRESS. (P) : 10 psi. DESIGN TEMP. : 328 deg. F

ATIC PRESSURE

LIQUID LEVEL # 1 = 3.25 ft.
SPECIFIC GRAVITY = 1.13

----- FLGS -----

FLGS MATERIAL : SA 105
FLGS RATING : 150 #
M.A.W.P. OF FLGS (NEW) : 285 psi.
M.A.W.P. OF FLGS (DES.) : 221.6 psi.

----- HEADS -----

- TOP HEAD
HEAD TYPE : F & D
HD MATERIAL : SA 516 70
ALLOW. STRESS (N & C) : 17500 psi.
ALLOW. STRESS (DES.) : 17500 psi.
J.E. : 70 %
C.A. : .0625 in.
THK. : .25 in.

- BTM. HEAD
HEAD TYPE : F & D
MATERIAL : SA 516 70
ALLOW. STRESS (N & C) : 17500 psi.
ALLOW. STRESS (DES.) : 17500 psi.
J.E. : 70 %
C.A. : .0625 in.

THK. : .25 in.

****

--- SHELL ---

- 3.083333 ft. OF SHELL

SH. MATERIAL : SA 516 70
ALLOW. STRESS (N & C) : 17500 psi.
ALLOW. STRESS (DES.) : 17500 psi.
J.E. : 70 %
C.A. : .0625 in.
THK. : .25 in.

---> VESSEL CONSTRUCTED PER A.S.M.E. SECT. VIII DIV. I <---

ITEM NO. : V-2214 S/O NO. :

****

----> SHELL <----

****

- Section diameter : 72 in.
- Sect. length : 3.083333 ft.

$$THK\ (REQ'D) = \frac{(P + Stp) \times (R)}{(Sd \times E) + (0.4 \times (P + Stp))} + C$$

$$THK\ (REQ'D) = \frac{(10 + 1.591294) \times (36)}{(17500 \times .7) + (0.4 \times (10 + 1.591294))} + .0625$$

THK (REQ'D) = 9.655132E-02 in.

THK USE (ST) = .25 in.

$$M.A.P.\ (NEW) = \frac{Sa \times E \times ST}{R - (0.4 \times ST)}$$

$$M.A.P.\ (NEW) = \frac{17500 \times .7 \times .25}{36 - (0.4 \times .25)}$$

M.A.P. (NEW) = 85.3064 psi.

$$M.A.P.\ (CORR.) = \frac{Sd \times E \times (ST - C)}{(R) - (0.4 \times (ST - C))}$$

$$M.A.P.\ (CORR.) = \frac{17500 \times .7 \times (.25 - .0625)}{(36) - (0.4 \times (.25 - .0625))}$$

M.A.P. (CORR.) = 63.93528 psi. 62.34399 psi. (- 1.591294 Stactic P.)

****

NOMENCLATURE :

Sa = Allow. stress (N&C) Sd = Allow. stress (Des.)

ITEM NO. : V-2214 S/O NO. :

****

----> F & D HEAD <----

****

Lo = 72 Ro = 4.5

Li/Ri = 16.88235 M = 1.763304

$$THK\ (REQ'D) = \frac{(P + Stp) \times (Lo) \times M}{(2 \times Sd \times E) + ((M-0.2) \times (P + Stp))} + C$$

$$THK\ (REQ'D) = \frac{(10 + 1.583644) \times (72) \times 1.763304}{(2 \times 17500 \times .7) + ((1.763304 - .2) \times (10 + 1.583644))} + .0625$$

THK (REQ'D) = .1224816 in.

THK USE = .25 in.

$$M.A.P.\ (NEW) = \frac{2 \times Sa \times E \times HT}{(Lo \times M) - ((M-0.2) \times HT)}$$

$$M.A.P.\ (NEW) = \frac{2 \times 17500 \times .7 \times .25}{(72 \times 1.763304) - ((1.763304 - 0.2) \times .25)}$$

M.A.P. (NEW) = 48.39331 psi.

$$M.A.P.\ (CORR.) = \frac{2 \times Sd \times E \times (HT - C)}{(Lo \times M) + ((M-0.2) \times (HT - C))}$$

$$M.A.P.\ (CORR.) = \frac{2 \times 17500 \times .7 \times (.25 - .0625)}{(72 \times 1.763304) - ((1.763304 - 0.2) \times (.25 - .0625))}$$

M.A.P. (CORR.) = 36.26698 psi. 34.68334 psi. (- 1.583644 Stactic P.)

****

NOMENCLATURE :

= Allow. stress (N&C) Sd = Allow. stress (Des.)

ITEM NO. : V-2214 S/O NO. :

****

----> F & D HEAD <----

****

Lo = 72 Ro = 4.5

Li/Ri = 16.88235 M = 1.763304

$$THK\ (REQ'D) = \frac{(P + Stp) \times (Lo) \times M}{(2 \times Sd \times E) + ((M-0.2) \times (P + Stp))} + C$$

$$THK\ (REQ'D) = \frac{(10 + 8.160487E-02) \times (72) \times 1.763304}{(2 \times 17500 \times .7) + ((1.763304 - .2) \times (10 + 8.160487E-02))} + .0625$$

THK (REQ'D) = .1147088 in.

THK USE = .25 in.

$$M.A.P.\ (NEW) = \frac{2 \times Sa \times E \times HT}{(Lo \times M) - ((M-0.2) \times HT)}$$

$$M.A.P.\ (NEW) = \frac{2 \times 17500 \times .7 \times .25}{(72 \times 1.763304) - ((1.763304 - 0.2) \times .25)}$$

M.A.P. (NEW) = 48.39331 psi.

$$M.A.P.\ (CORR.) = \frac{2 \times Sd \times E \times (HT - C)}{(Lo \times M) + ((M-0.2) \times (HT - C))}$$

$$M.A.P.\ (CORR.) = \frac{2 \times 17500 \times .7 \times (.25 - .0625)}{(72 \times 1.763304) - ((1.763304 - 0.2) \times (.25 - .0625))}$$

M.A.P. (CORR.) = 36.26698 psi. 36.18538 psi. (- 8.160487E-02 Stactic P.)

****

NOMENCLATURE :

Sa = Allow. stress (N&C) Sd = Allow. stress (Des.)

ITEM NO. : V-2214 S/O NO. :

****

***** NAME PLATE STAMPING *****

****

M.A.P. (N & C) = 48 psi. @ Atm. temp. (GOVERNS BY : Bottom Head)

M.A.W.P. (DES.) = 34 psi. @ 328 deg. F (GOVERNS BY : Bottom Head) *

HYDRO TEST PRESS. = 1.5 X M.A.P. (N & C) = 73 psi.

****

* --> M.A.W.P. shown above, excluded static head pressure.
1.8 psi. ext. press. @ 328 deg. F

****

PRESSURE VESSEL DESIGN PRO CORP.
HOUSTON TX

****

----- EXTERNAL PRESSURE -----

CUSTOMER NAME : FMC

P.O. NO. : 96096.088

ITEM NO. : V-2214 S/O NO. :

VESS. NAME : NO.2 FURNACE 2ND PASS SLURRY POT

DESIGNER NAME : CS HSU DATE : 08-13-1999

****

72 in. OD X 3 FT 1 in. TL-TL

----> DESIGN DATA <----

DES. PRESS : 1.8 psi. DES. TEMP. : 328 deg. F

C.A. @ SH : .0625 C.A. @ HDS : .0625

J.E. @ SH : 70 % J.E. @ HDS : 70 %

----- SHELL -----

SH MATERIAL : SA 516 70

ALLOW. STRESS (DES.) : 17500 psi.

SH THK (NEW) : .25 in.

----- HEADS -----

HD MATERIAL : SA 516 70 (Btm.) SA 516 70 (Top)

ALLOW. STRESS (DES.) : 17500 psi. 17500 psi.

HD THK (NEW) : .25 in. .25 in.

ITEM NO. : V-2214 S/O NO. :

****

----> SHELL <----

****

TL TO TL = 37 in.

1/3 OF HD DEPTH = 4 in.

L (USE) = 41 in.

OD = 72 in.

T (CORR.) = .1875 in.

L / OD = 41 / 72 = .5694444

OD / T = 72 / .1875 = 384

3.262111E-04 (FIG. G)

B = 4684.392 psi. (FIG. CS-2) & (UG-23)

PA = (4 X B) / (3 X (OD /T))

PA = (4 X 4684.392) / (3 X (72 / .1875))

PA = 16.26525 psi. @ 328 deg. F

****

ITEM NO. : V-2214 S/O NO. :

****

----> F & D HD (BTM) <----

****

RO = OD = 72 in.

T (CORR.) = .1875 in.

RO / T = 72 / .1875 = 384

A = 0.125 / (RO /T)

A = 0.125 / (72 / .1875) = 3.255208E-04

B = 4674.48 psi. (FIG. CS-2) & (UG-23)

= B / (RO / T)

PA = 4674.48 / (72 / .1875) = 12.17312 psi. @ 328 deg. F

****

ITEM NO. : V-2214 S/O NO. :

****

----> F & D HD (TOP) <----

****

RO = OD = 72 in.

T (CORR.) = .1875 in.

RO / T = 72 / .1875 = 384

A = 0.125 / (RO /T)

A = 0.125 / (72 / .1875) = 3.255208E-04

B = 4674.48 psi. (FIG. CS-2) & (UG-23)

= B / (RO / T)

PA = 4674.48 / (72 / .1875) = 12.17312 psi. @ 328 deg. F

****

NOZZLE REINFORCEMENT (N1)

++

..... Pressure Vessel Design Pro Corp. .....

Houston Tx

++

File name & design pressures (# 1)

File name = V2214N1
Cust. name = FMC
P.O. no. = 96096.088
Item no. = V-2214
S/o no. =
Des. name = CS HSU
Vess. name = NO.2 FURNACE 2ND PASS SLURRY POT
Units (E/M) = E
Mode desired (D/A) = A

M.A.P. = 10/1.8
M.A.W.P. = 10/1.8
Des. temp. = 328

- Vessel & nozzle material (# 2)

Vess. mat. = SA 516 70
Allow. stress (n&c) = 17500
Allow. stress (des.) = 17500
Joint eff. (%) = 100
Corr. allow. = .0625
Vess. thk. = 0.375
Vess. ID = 71.25

Nozz. mk. = N1
Nozz. mat. = SA 516 70
Allow. stress (n&c) = 17500
Allow. stress (des.) = 17500
Joint eff. (%) = 100
Corr. allow. = .0625

- Nozzle location (# 3)

Location (S/H/C) = S
Head type (E/F/H/FLG) =

0.9 use (Y/N) =

Ins. crown rad. =
Ins. kn. rad. =
Factor M use (Y/N) =

Head rad. =

Cone ID (se) =
Cone heigth =
Str. to cone sm. (le) =

- Reinforcing type & material (# 4)

100% reinf. (Y/N) = N
Tr (n&c) =
Tr (des.) =

Nozzle type (R/I) = R

Pad mat. = SA 516 70
Allow. stress (n&c) = 17500
Allow. stress (des.) = 17500

Bevel deg. =
Nut stop/relief (S/R) =
Toler. @ nut stop =
Tol. @ nut space =

- Nozzle with reinforced pad (# 5)

Ins. proj. = 0
Nozzle size = 15
Nozz. thk. = 0.375
Nozz. OD = 21.2132
Nozz. sch. =

With pad (Y/N) = Y
Pad thk. = 0.375
Pad width = 3

Weld thk. (outs.) =
Weld thk. (ins.) =
Weld thk. (pad) =

- Self reinforced nozzle (# 6)

Ins. proj. =
Nozzle size =
Nozz. thk. =
Nozz. OD =
Nozz. Rating/Sch. =

Outs. proj. =
Flange face (1/2/3) =
Dim. a =
Dim. b =
Dim. c =

Weld thk. (outs.) =
Weld thk.(ins.) =

++

..... Pressure Vessel Design Pro Corp. .....

Houston Tx

++

- Calculation reports (# 7)

Weld calc. (Y/N) = X
Calc. report (Y/N) = Y
N&C report (Y/N) = Y
Resuls only (Y/N) = Y
Ext. P calc. (Y/N) = Y

Hill side (Y/N) = N
Ctr-Ctr dim. =

Per 1-7(b) (Y/N) = Y

Des. ext. press. = 2.872E+07
Shell length = 34.25
Tr (ext.) (N&C) = .1875

- (# 8)

****

PRESSURE VESSEL DESIGN PRO CORP.
HOUSTON TX

****

---- NOZZLE REINFORCEMENT ----

CUSTOMER NAME : FMC
P.O. NO. : 96096.088
ITEM NO. : V-2214 S/O NO. :
DESIGNER NAME : CS HSU DATE : 08-13-1999

****

----- PER A.S.M.E. SECT. VIII DIV. I (LATEST ADDENDA) -----

---> DESIGN DATA <----

NOZ. DESCR. : (N1) 15 in. OPENING IN 71.25 in. ID SHELL

MAP & MAWP : 10 psi. (N&C) 10 psi. (DES.)

DES. TEMP. : 328 deg. F

VESSEL :

SHELL MAT. : SA 516 70
ALLOW. STRESS : 17500 psi. (N&C) 17500 psi. (DES.)
THK : .375 in. (N&C) .3125 in. (CORR.)
J.E. @ JUNCTION : 100 (%) C.A. = .0625 in.

NOZZLE :

NECK MAT. : SA 516 70
ALLOW. STRESS : 17500 psi. (N&C) 17500 psi. (DES.)
THK : .375 in. (N&C) .3125 in. (CORR.)
OD : 21.2132 in. ()
ID : 20.4632 in. (N&C) 20.5882 in. (CORR.)
J.E. @ JUNCTION : 100 (%) C.A. = .0625 in.

WELD THK @ NECK : 0 in. (OUTWARD)

REINF. PAD :

PAD : .375 in. THK X 3 in. WIDE W/ 0 in. THK WELD @ PAD
MAT. : SA 516 70
ALLOW. STRESS : 17500 psi. (N&C) 17500 psi. (DES.)

ITEM NO. : V-2214 S/O NO. :
NOZ. MK. : N1

****

---> DESIGN CONDITION <---

LIMITS :

HORIZONTAL LIMIT = 9.9816 in.
VERTICAL LIMIT = .78125 in.

STRENGTH RED. FACTORS :
---
fr (A2,A3 & A43) = 1
fr (A41) = 1
fr (A5 & A42) = 1

tr = 2.039985E-02 in. (Ext. = .125 in.)
trn = 5.884361E-03 in. (Ext. = .106066 in.)

A = .4199962 in. sq. (Ext. = 1.286762 in. sq.)

A1 = 6.013816 in. sq. (Ext. = 3.860287 in. sq.)
A2 = .4790869 in. sq. (Ext. = .3225532 in. sq.)
A3 = 0 in. sq.
A41 = 0 in. sq.
A43 = 0 in. sq.
A42 = 0 in. sq.
A5 = 2.25 in. sq.

AREA AVAIL. (Aa) = 8.742903 in. sq. (Ext. = 6.43284 in. sq.)

===> Aa >= A (OPENING IS ADEQUATELY REINFORCED.) <===

ITEM NO. : V-2214 S/O NO. :
NOZ. MK. : N1

Page 26

****

---> N & C CONDITION <---

LIMITS :

HORIZONTAL LIMIT = 9.8566 in.
VERTICAL LIMIT = .9375 in.

STRENGTH RED. FACTORS :
---
fr (A2,A3 & A43) = 1
fr (A41) = 1
fr (A5 & A42) = 1

tr = 2.036412E-02 in.
trn = 5.848634E-03 in.

A = .4167152 in. sq.

A1 = 7.256985 in. sq.
A2 = .6921588 in. sq.
A3 = 0 in. sq.
A41 = 0 in. sq.
A43 = 0 in. sq.
A42 = 0 in. sq.
A5 = 2.25 in. sq.

AREA AVAIL. (Aa) = 10.19914 in. sq.

===> Aa >= A (OPENING IS ADEQUATELY REINFORCED.) <===

NOZZLE REINFORCEMENT (N2)

++

..... Pressure Vessel Design Pro Corp. .....

Houston Tx

++

- File name & design pressures (# 1)

File name = V2214N2
Cust. name = FMC
P.O. no. = 96096.088
Item no. = V-2214
S/o no. =
Des. name = CS HSU
Vess. name = NO.2 FURNACE 2ND PASS SLURRY POT
Units (E/M) = E
Mode desired (D/A) = A

M.A.P. = 10/1.8
M.A.W.P. = 10/1.8
Des. temp. = 328

- Vessel & nozzle material (# 2)

Vess. mat. = SA 516 70
Allow. stress (n&c) = 17500
Allow. stress (des.) = 17500
Joint eff. (%) = 100
Corr. allow. = .0625
Vess. thk. = 0.375
Vess. ID = 71.25

Nozz. mk. = N2
Nozz. mat. = SA 106 B
Allow. stress (n&c) = 15000
Allow. stress (des.) = 15000
Joint eff. (%) = 100
Corr. allow. = .0625

- Nozzle location (# 3)

Location (S/H/C) = H
Head type (E/F/H/FLG) = F

0.9 use (Y/N) =

Ins. crown rad. = 72
Ins. kn. rad. = 4.5
Factor M use (Y/N) = Y

Head rad. =

Cone ID (se) =
Cone heigth =
Ctr. to cone sm. (le) =

- Reinforcing type & material (# 4)

100% reinf. (Y/N) = N
Tr (n&c) =
Tr (des.) =

Nozzle type (R/I) = R

Pad mat. = SA 516 70
Allow. stress (n&c) = 17500
Allow. stress (des.) = 17500

Bevel deg. =
Nut stop/relief (S/R) =
Toler. @ nut stop =
Tol. @ nut space =

- Nozzle with reinforced pad (# 5)

Ins. proj. = 0
Nozzle size = 14
Nozz. thk. = 0.5
Nozz. OD = 14
Nozz. sch. = XST

With pad (Y/N) = Y
Pad thk. = 0.375
Pad width = 3

Weld thk. (outs.) =
Weld thk. (ins.) =
Weld thk. (pad) =

- Self reinforced nozzle (# 6)

Ins. proj. =
Nozzle size =
Nozz. thk. =
Nozz. OD =
Nozz. Rating/Sch. =

Outs. proj. =
Flange face (1/2/3) =
Dim. a =
Dim. b =
Dim. c =

Weld thk. (outs.) =
Weld thk.(ins.) =

```
++++++++++++++++++++++++++++++++++++++++++++++++++++++++++++++++++++++++++++++++
          .......... Pressure Vessel Design Pro Corp. ..........
                                   Houston Tx
++++++++++++++++++++++++++++++++++++++++++++++++++++++++++++++++++++++++++++++++
```

Calculation reports (# 7)

Weld calc. (Y/N)	= N
Calc. report (Y/N)	= Y
N&C report (Y/N)	= Y
Resuls only (Y/N)	= Y
Ext. P calc. (Y/N)	= Y
Hill side (Y/N)	= N
Ctr-Ctr dim.	=
Per 1-7(b) (Y/N)	= Y
Des. ext. press.	= 2.872E+07
Shell length	= 34.25
Tr (ext.) (N&C)	= .1875

- (# 8)

****

PRESSURE VESSEL DESIGN PRO CORP.
HOUSTON TX

****

---- NOZZLE REINFORCEMENT ----

CUSTOMER NAME : FMC
P.O. NO. : 96096.088
ITEM NO. : V-2214 S/O NO. :
DESIGNER NAME : CS HSU DATE : 08-13-1999

****

----- PER A.S.M.E. SECT. VIII DIV. I (LATEST ADDENDA) -----

---> DESIGN DATA <----

NOZ. DESCR. : (N2) 14 in. OPENING IN 71.25 in. ID F & D HD

MAP & MAWP : 10 psi. (N&C) 10 psi. (DES.)

DES. TEMP. : 328 deg. F

VESSEL :

F & D HD MAT. : SA 516 70
ALLOW. STRESS : 17500 psi. (N&C) 17500 psi. (DES.)
THK : .375 in. (N&C) .3125 in. (CORR.)
INS. CROWN RAD. : 72 in. (N&C) 72.0625 in. (CORR.)
INS. KNUCKLE RAD. : 4.5 in. FACTOR M = 1.75
J.E. @ JUNCTION : 100 (%) C.A. = .0625 in.

NOZZLE :

NECK MAT. : SA 106 B
ALLOW. STRESS : 15000 psi. (N&C) 15000 psi. (DES.)
THK : .5 in. (N&C) .4375 in. (CORR.)
OD : 14 in. (XST)
ID : 13 in. (N&C) 13.125 in. (CORR.)
J.E. @ JUNCTION : 100 (%) C.A. = .0625 in.

WELD THK @ NECK : 0 in. (OUTWARD)

REINF. PAD :

PAD : .375 in. THK X 3 in. WIDE W/ 0 in. THK WELD @ PAD
MAT. : SA 516 70
ALLOW. STRESS : 17500 psi. (N&C) 17500 psi. (DES.)

ITEM NO. : V-2214 S/O NO. :
NOZ. MK. : N2

****

---> DESIGN CONDITION <---

LIMITS :

HORIZONTAL LIMIT = 6.125 in.
VERTICAL LIMIT = .78125 in.

STRENGTH RED. FACTORS :
---
fr (A2,A3 & A43) = .8571429
fr (A41) = .8571429
fr (A5 & A42) = 1

tr = 3.603331E-02 in. (Ext. = .125 in.)
trn = 4.376751E-03 in. (Ext. = .07 in.)

A = .4774414 in. sq. (Ext. = .8359375 in. sq.)

A1 = 3.594067 in. sq. (Ext. = 2.4375 in. sq.)
A2 = .5800758 in. sq. (Ext. = .4921875 in. sq.)
A3 = 0 in. sq.
A41 = 0 in. sq.
A43 = 0 in. sq.
A42 = 0 in. sq.
[illegible] = 2.25 in. sq.

AREA AVAIL. (Aa) = 6.424143 in. sq. (Ext. = 5.179688 in. sq.)

===> Aa >= A (OPENING IS ADEQUATELY REINFORCED.) <===

ITEM NO. : V-2214 S/O NO. :
NOZ. MK. : N2

****

---> N & C CONDITION <---

LIMITS :

HORIZONTAL LIMIT = 6 in.
VERTICAL LIMIT = .9375 in.

STRENGTH RED. FACTORS :
---
fr (A2,A3 & A43) = .8571429
fr (A41) = .8571429
fr (A5 & A42) = 1

tr = 3.600206E-02 in.
trn = 4.335067E-03 in.

A = .4731699 in. sq.

A1 = 4.358545 in. sq.
A2 = .7966043 in. sq.
A3 = 0 in. sq.
A41 = 0 in. sq.
A43 = 0 in. sq.
A42 = 0 in. sq.
A5 = 2.25 in. sq.

AREA AVAIL. (Aa) = 7.405149 in. sq.

===> Aa >= A (OPENING IS ADEQUATELY REINFORCED.) <===

NOZZLE REINFORCEMENT (N3)

++

..... Pressure Vessel Design Pro Corp. .....

Houston Tx

++

File name & design pressures (# 1)

File name = V2214N3
Cust. name = FMC
P.O. no. = 96096.088
Item no. = V-2214
S/o no. =
Des. name = CS HSU
Vess. name = NO.2 FURNACE 2ND PASS SLURRY POT
Units (E/M) = E
Mode desired (D/A) = A

M.A.P. = 10/1.8
M.A.W.P. = 10/1.8
Des. temp. = 328

- Vessel & nozzle material (# 2)

Vess. mat. = SA 516 70
Allow. stress (n&c) = 17500
Allow. stress (des.) = 17500
Joint eff. (%) = 100
Corr. allow. = .0625
Vess. thk. = 0.375
Vess. ID = 71.25

Nozz. mk. = N3
Nozz. mat. = SA 53 B
Allow. stress (n&c) = 15000
Allow. stress (des.) = 15000
Joint eff. (%) = 100
Corr. allow. = .0625

- Nozzle location (# 3)

Location (S/H/C) = H
Head type (E/F/H/FLG) = F

0.9 use (Y/N) =

Ins. crown rad. = 72
Ins. kn. rad. = 4.5
Factor M use (Y/N) = Y

Head rad. =

Cone ID (se) =
Cone heigth =
Str. to cone sm. (le) =

```
+++++++++++++++++++++++++++++++++++++++++++++++++++++++++++++++++++++++++++++++
          .......... Pressure Vessel Design Pro Corp. ..........
                                  Houston Tx
+++++++++++++++++++++++++++++++++++++++++++++++++++++++++++++++++++++++++++++++

- Reinforcing type & material  ( # 4 )

100% reinf. (Y/N)     = N
Tr (n&c)              =
Tr (des.)             =

Nozzle type (R/I)     = R

Pad mat.              = SA 516 70
Allow. stress (n&c)   = 17500
Allow. stress (des.)  = 17500

Bevel deg.            =
Nut stop/relief (S/R) =
Toler. @ nut stop     =
Tol. @ nut space      =

- Nozzle with reinforced pad  ( # 5 )

Ins. proj.            = 0
Nozzle size           = 6
Nozz. thk.            = 0.28
Nozz. OD              = 6.625
Nozz. sch.            = 40

With pad (Y/N)        = Y
Pad thk.              = 0.375
Pad width             = 3


Weld thk. (outs.)     =
Weld thk. (ins.)      =
Weld thk. (pad)       =

- Self reinforced nozzle  ( # 6 )

Ins. proj.            =
Nozzle size           =
Nozz. thk.            =
Nozz. OD              =
Nozz. Rating/Sch.     =

Outs. proj.           =
Flange face (1/2/3)   =
Dim. a                =
Dim. b                =
Dim. c                =

Weld thk. (outs.)     =
Weld thk.(ins.)       =
```

```
++++++++++++++++++++++++++++++++++++++++++++++++++++++++++++++++++++++++++++++++++++++++
          .......... Pressure Vessel Design Pro Corp. ..........
                                  Houston Tx
++++++++++++++++++++++++++++++++++++++++++++++++++++++++++++++++++++++++++++++++++++++++
```

Calculation reports (# 7)

```
Weld calc.   (Y/N)    = N
Calc. report (Y/N)    = Y
N&C report   (Y/N)    = Y
Resuls only (Y/N)     = Y
Ext. P calc. (Y/N)    = Y

Hill side (Y/N)       = N
Ctr-Ctr dim.          =

Per 1-7(b) (Y/N)      = Y

Des. ext. press.      = 2.872E+07
Shell length          = 34.25
Tr (ext.) (N&C)       = .1875
```

- (# 8)

****

PRESSURE VESSEL DESIGN PRO CORP.
HOUSTON TX

****

---- NOZZLE REINFORCEMENT ----

CUSTOMER NAME : FMC
P.O. NO. : 96096.088
ITEM NO. : V-2214 S/O NO. :
DESIGNER NAME : CS HSU DATE : 08-13-1999

****

----- PER A.S.M.E. SECT. VIII DIV. I (LATEST ADDENDA) -----

---> DESIGN DATA <----

NOZ. DESCR. : (N3) 6 in. OPENING IN 71.25 in. ID F & D HD

MAP & MAWP : 10 psi. (N&C) 10 psi. (DES.)

DES. TEMP. : 328 deg. F

VESSEL :

F & D HD MAT. : SA 516 70
ALLOW. STRESS : 17500 psi. (N&C) 17500 psi. (DES.)
THK : .375 in. (N&C) .3125 in. (CORR.)
INS. CROWN RAD. : 72 in. (N&C) 72.0625 in. (CORR.)
INS. KNUCKLE RAD. : 4.5 in. FACTOR M = 1.75
J.E. @ JUNCTION : 100 (%) C.A. = .0625 in.

NOZZLE :

NECK MAT. : SA 53 B
ALLOW. STRESS : 15000 psi. (N&C) 15000 psi. (DES.)
THK : .28 in. (N&C) .2175 in. (CORR.)
OD : 6.625 in. (40)
ID : 6.065 in. (N&C) 6.19 in. (CORR.)
J.E. @ JUNCTION : 100 (%) C.A. = .0625 in.

WELD THK @ NECK : 0 in. (OUTWARD)

REINF. PAD :

PAD : .375 in. THK X 3 in. WIDE W/ 0 in. THK WELD @ PAD
MAT. : SA 516 70
ALLOW. STRESS : 17500 psi. (N&C) 17500 psi. (DES.)

ITEM NO. : V-2214 S/O NO. :
NOZ. MK. : N3

****

---> DESIGN CONDITION <---

LIMITS :

HORIZONTAL LIMIT = 2.8775 in.
VERTICAL LIMIT = .78125 in.

STRENGTH RED. FACTORS :
---
fr (A2,A3 & A43) = .8571429
fr (A41) = .8571429
fr (A5 & A42) = 1

tr = 3.603331E-02 in. (Ext. = .125 in.)
trn = 2.064159E-03 in. (Ext. = 4.140625E-02 in.)

A = .2252854 in. sq. (Ext. = .3946429 in. sq.)

A1 = 1.694148 in. sq. (Ext. = 1.148973 in. sq.)
A2 = .2885301 in. sq. (Ext. = .2358399 in. sq.)
A3 = 0 in. sq.
A41 = 0 in. sq.
A43 = 0 in. sq.
42 = 0 in. sq.
= 2.158125 in. sq.

AREA AVAIL. (Aa) = 4.140803 in. sq. (Ext. = 3.542938 in. sq.)

===> Aa >= A (OPENING IS ADEQUATELY REINFORCED.) <===

ITEM NO. : V-2214 S/O NO. :
NOZ. MK. : N3

****

---> N & C CONDITION <---

LIMITS :

HORIZONTAL LIMIT = 2.7525 in.
VERTICAL LIMIT = .9375 in.

STRENGTH RED. FACTORS :
---
fr (A2,A3 & A43) = .8571429
fr (A41) = .8571429
fr (A5 & A42) = 1

tr = 3.600206E-02 in.
trn = 2.022476E-03 in.

A = .2212327 in. sq.

A1 = 2.028903 in. sq.
A2 = .4467496 in. sq.
A3 = 0 in. sq.
A41 = 0 in. sq.
A43 = 0 in. sq.
A42 = 0 in. sq.
A5 = 2.064375 in. sq.

AREA AVAIL. (Aa) = 4.540027 in. sq.

===> Aa >= A (OPENING IS ADEQUATELY REINFORCED.) <===

NOZZLE REINFORCEMENT (N4)

++

..... Pressure Vessel Design Pro Corp. .....

Houston Tx

++

- File name & design pressures (# 1)

File name = V2214N4
Cust. name = FMC
P.O. no. = 96096.088
Item no. = V-2214
S/o no. =
Des. name = CS HSU
Vess. name = NO.2 FURNACE 2ND PASS SLURRY POT
Units (E/M) = E
Mode desired (D/A) = A

M.A.P. = 10/1.8
M.A.W.P. = 10/1.8
Des. temp. = 328

- Vessel & nozzle material (# 2)

Vess. mat. = SA 516 70
Allow. stress (n&c) = 17500
Allow. stress (des.) = 17500
Joint eff. (%) = 100
Corr. allow. = .0625
ss. thk. = 0.375
ss. ID = 71.25

Nozz. mk. = N4
Nozz. mat. = SA 53 B
Allow. stress (n&c) = 15000
Allow. stress (des.) = 15000
Joint eff. (%) = 100
Corr. allow. = .0625

- Nozzle location (# 3)

Location (S/H/C) = S
Head type (E/F/H/FLG) =

0.9 use (Y/N) =

Ins. crown rad. =
Ins. kn. rad. =
Factor M use (Y/N) =

Head rad. =

Cone ID (se) =
Cone heigth =
tr. to cone sm. (le) =

```
++++++++++++++++++++++++++++++++++++++++++++++++++++++++++++++++++++++++++++++++
          .......... Pressure Vessel Design Pro Corp. ..........
                                  Houston Tx
++++++++++++++++++++++++++++++++++++++++++++++++++++++++++++++++++++++++++++++++

- Reinforcing type & material  ( # 4 )

100% reinf. (Y/N)      = N
Tr (n&c)               =
Tr (des.)              =

Nozzle type (R/I)      = R

Pad mat.               = SA 516 70
Allow. stress (n&c)    = 17500
Allow. stress (des.)   = 17500

Bevel deg.             =
Nut stop/relief (S/R)  =
Toler. @ nut stop      =
Tol. @ nut space       =

- Nozzle with reinforced pad  ( # 5 )

Ins. proj.             = 0
Nozzle size            = 4
Nozz. thk.             = 0.237
Nozz. OD               = 4.5
Nozz. sch.             = 40

With pad (Y/N)         = Y
Pad thk.               = 0.375
Pad width              = 2.25


Weld thk. (outs.)      =
Weld thk. (ins.)       =
Weld thk. (pad)        =

- Self reinforced nozzle  ( # 6 )

Ins. proj.             =
Nozzle size            =
Nozz. thk.             =
Nozz. OD               =
Nozz. Rating/Sch.      =

Outs. proj.            =
Flange face (1/2/3)    =
Dim. a                 =
Dim. b                 =
Dim. c                 =

Weld thk. (outs.)      =
Weld thk.(ins.)        =
```

```
+++++++++++++++++++++++++++++++++++++++++++++++++++++++++++++++++++++++++++++++
          .......... Pressure Vessel Design Pro Corp. ..........
                                  Houston Tx
+++++++++++++++++++++++++++++++++++++++++++++++++++++++++++++++++++++++++++++++
```

- Calculation reports (# 7)

Weld calc. (Y/N)	= N
Calc. report (Y/N)	= Y
N&C report (Y/N)	= Y
Resuls only (Y/N)	= Y
Ext. P calc. (Y/N)	= Y
Hill side (Y/N)	= N
Ctr-Ctr dim.	=
Per 1-7(b) (Y/N)	= Y
Des. ext. press.	= 2.872E+07
Shell length	= 34.25
Tr (ext.) (N&C)	= .1875

- (# 8)

****

PRESSURE VESSEL DESIGN PRO CORP.
HOUSTON TX

****

---- NOZZLE REINFORCEMENT ----

CUSTOMER NAME : FMC
P.O. NO. : 96096.088
ITEM NO. : V-2214 S/O NO. :
DESIGNER NAME : CS HSU DATE : 08-13-1999

****

----- PER A.S.M.E. SECT. VIII DIV. I (LATEST ADDENDA) -----

---> DESIGN DATA <----

NOZ. DESCR. : (N4) 4 in. OPENING IN 71.25 in. ID SHELL

MAP & MAWP : 10 psi. (N&C) 10 psi. (DES.)

DES. TEMP. : 328 deg. F

VESSEL :

SHELL MAT. : SA 516 70
ALLOW. STRESS : 17500 psi. (N&C) 17500 psi. (DES.)
THK : .375 in. (N&C) .3125 in. (CORR.)
J.E. @ JUNCTION : 100 (%) C.A. = .0625 in.

NOZZLE :

NECK MAT. : SA 53 B
ALLOW. STRESS : 15000 psi. (N&C) 15000 psi. (DES.)
THK : .237 in. (N&C) .1745 in. (CORR.)
OD : 4.5 in. (40)
ID : 4.026 in. (N&C) 4.151 in. (CORR.)
J.E. @ JUNCTION : 100 (%) C.A. = .0625 in.

WELD THK @ NECK : 0 in. (OUTWARD)

REINF. PAD :

PAD : .375 in. THK X 2.25 in. WIDE W/ 0 in. THK WELD @ PAD
MAT. : SA 516 70
ALLOW. STRESS : 17500 psi. (N&C) 17500 psi. (DES.)

ITEM NO. : V-2214 S/O NO. :
NOZ. MK. : N4

****

---> DESIGN CONDITION <---

LIMITS :

HORIZONTAL LIMIT = 1.901 in.
VERTICAL LIMIT = .78125 in.

STRENGTH RED. FACTORS :
---
fr (A2,A3 & A43) = .8571429
fr (A41) = .8571429
fr (A5 & A42) = 1

tr = 2.039985E-02 in. (Ext. = .125 in.)
trn = 1.38422E-03 in. (Ext. = .028125 in.)

A = 8.569685E-02 in. sq. (Ext. = .2656696 in. sq.)

A1 = 1.197944 in. sq. (Ext. = .7689643 in. sq.)
A2 = .2318515 in. sq. (Ext. = .1960379 in. sq.)
A3 = 0 in. sq.
A41 = 0 in. sq.
A43 = 0 in. sq.
A42 = 0 in. sq.
[illegible] = 1.42575 in. sq.

AREA AVAIL. (Aa) = 2.855546 in. sq. (Ext. = 2.390752 in. sq.)

===> Aa >= A (OPENING IS ADEQUATELY REINFORCED.) <===

ITEM NO. : V-2214 S/O NO. :
NOZ. MK. : N4

****

---> N & C CONDITION <---

LIMITS :

HORIZONTAL LIMIT = 1.776 in.
VERTICAL LIMIT = .9375 in.

STRENGTH RED. FACTORS :
---
fr (A2,A3 & A43) = .8571429
fr (A41) = .8571429
fr (A5 & A42) = 1

tr = 2.036412E-02 in.
trn = 1.342537E-03 in.

A = .0833649 in. sq.

A1 = 1.40375 in. sq.
A2 = .3787352 in. sq.
A3 = 0 in. sq.
A41 = 0 in. sq.
A43 = 0 in. sq.
[illegible]2 = 0 in. sq.
[illegible] = 1.332 in. sq.

AREA AVAIL. (Aa) = 3.114485 in. sq.

===> Aa >= A (OPENING IS ADEQUATELY REINFORCED.) <===

NOZZLE REINFORCEMENT (N5)

++

..... Pressure Vessel Design Pro Corp. .....

Houston Tx

++

- File name & design pressures (# 1)

File name = V2214N5
Cust. name = FMC
P.O. no. = 96096.088
Item no. = V-2214
S/o no. =
Des. name = CS HSU
Vess. name = NO.2 FURNACE 2ND PASS SLURRY POT
Units (E/M) = E
Mode desired (D/A) = A

M.A.P. = 10/1.8
M.A.W.P. = 10/1.8
Des. temp. = 328

- Vessel & nozzle material (# 2)

Vess. mat. = SA 516 70
Allow. stress (n&c) = 17500
Allow. stress (des.) = 17500
Joint eff. (%) = 100
Corr. allow. = .0625
Vess. thk. = 0.375
Vess. ID = 71.25

Nozz. mk. = N5
Nozz. mat. = SA 53 B
Allow. stress (n&c) = 15000
Allow. stress (des.) = 15000
Joint eff. (%) = 100
Corr. allow. = .0625

- Nozzle location (# 3)

Location (S/H/C) = S
Head type (E/F/H/FLG) =

0.9 use (Y/N) =

Ins. crown rad. =
Ins. kn. rad. =
Factor M use (Y/N) =

Head rad. =

Cone ID (se) =
Cone heigth =
Ctr. to cone sm. (le) =

```
++++++++++++++++++++++++++++++++++++++++++++++++++++++++++++++++++++++++++++++++
          .......... Pressure Vessel Design Pro Corp. ..........
                                 Houston Tx
++++++++++++++++++++++++++++++++++++++++++++++++++++++++++++++++++++++++++++++++

- Reinforcing type & material  ( # 4 )

100% reinf. (Y/N)      = N
Tr (n&c)               =
Tr (des.)              =

Nozzle type (R/I)      = R

Pad mat.               = SA 516 70
Allow. stress (n&c)    = 17500
Allow. stress (des.)   = 17500

Bevel deg.             =
Nut stop/relief (S/R)  =
Toler. @ nut stop      =
Tol. @ nut space       =

- Nozzle with reinforced pad  ( # 5 )

Ins. proj.             = 12
Nozzle size            = 3
Nozz. thk.             = 0.216
Nozz. OD               = 3.5
Nozz. sch.             = 40

[illegible] pad (Y/N)        = Y
Pad thk.               = 0.375
Pad width              = 2


Weld thk. (outs.)      =
Weld thk. (ins.)       =
Weld thk. (pad)        =

- Self reinforced nozzle  ( # 6 )

Ins. proj.             =
Nozzle size            =
Nozz. thk.             =
Nozz. OD               =
Nozz. Rating/Sch.      =

Outs. proj.            =
Flange face (1/2/3)    =
Dim. a                 =
Dim. b                 =
Dim. c                 =

Weld thk. (outs.)      =
[illegible] thk.(ins.)       =
```

```
++++++++++++++++++++++++++++++++++++++++++++++++++++++++++++++++++++++++++++++++++++
          .......... Pressure Vessel Design Pro Corp. ..........
                                 Houston Tx
++++++++++++++++++++++++++++++++++++++++++++++++++++++++++++++++++++++++++++++++++++
```

- Calculation reports (# 7)

```
Weld calc.   (Y/N)    = N
Calc. report (Y/N)    = Y
N&C report   (Y/N)    = Y
Resuls only (Y/N)     = Y
Ext. P calc. (Y/N)    = Y

Hill side (Y/N)       = N
Ctr-Ctr dim.          =

Per 1-7(b) (Y/N)      = Y

Des. ext. press.      = 2.872E+07
Shell length          = 34.25
Tr (ext.) (N&C)       = .1875
```

- (# 8)

****

PRESSURE VESSEL DESIGN PRO CORP.
HOUSTON TX

****

---- NOZZLE REINFORCEMENT ----

CUSTOMER NAME : FMC
P.O. NO. : 96096.088
ITEM NO. : V-2214 S/O NO. :
DESIGNER NAME : CS HSU DATE : 08-13-1999

****

----- PER A.S.M.E. SECT. VIII DIV. I (LATEST ADDENDA) -----

---> DESIGN DATA <----

NOZ. DESCR. : (N5) 3 in. OPENING IN 71.25 in. ID SHELL

MAP & MAWP : 10 psi. (N&C) 10 psi. (DES.)

DES. TEMP. : 328 deg. F

VESSEL :

SHELL MAT. : SA 516 70
ALLOW. STRESS : 17500 psi. (N&C) 17500 psi. (DES.)
THK : .375 in. (N&C) .3125 in. (CORR.)
J.E. @ JUNCTION : 100 (%) C.A. = .0625 in.

NOZZLE :

NECK MAT. : SA 53 B
ALLOW. STRESS : 15000 psi. (N&C) 15000 psi. (DES.)
THK : .216 in. (N&C) .1535 in. (CORR.)
OD : 3.5 in. (40)
ID : 3.068 in. (N&C) 3.193 in. (CORR.)
J.E. @ JUNCTION : 100 (%) C.A. = .0625 in.

WELD THK @ NECK : 0 in. (OUTWARD)

INS. PROJ. : 12 in. W/ 0 in. THK WELD (INWARD)

REINF. PAD :

PAD : .375 in. THK X 2 in. WIDE W/ 0 in. THK WELD @ PAD
MAT. : SA 516 70
ALLOW. STRESS : 17500 psi. (N&C) 17500 psi. (DES.)

ITEM NO. : V-2214 S/O NO. :
NOZ. MK. : N5

Page 49

****

---> DESIGN CONDITION <---

LIMITS :

HORIZONTAL LIMIT = 1.443 in.
VERTICAL LIMIT = .75875 in.

STRENGTH RED. FACTORS :
---
fr (A2,A3 & A43) = .8571429
fr (A41) = .8571429
fr (A5 & A42) = 1

tr = 2.039985E-02 in. (Ext. = .125 in.)
trn = 1.064759E-03 in. (Ext. = .035 in.)

A = .0660314 in. sq. (Ext. = .2050446 in. sq.)

A1 = .9198651 in. sq. (Ext. = .5904643 in. sq.)
A2 = .1982747 in. sq. (Ext. = .1541347 in. sq.)
A3 = 5.986501E-02 in. sq.
A41 = 0 in. sq.
A43 = 3.348214E-03 in. sq.
[illegible] = 0 in. sq.
[illegible] 1.08225 in. sq.

AREA AVAIL. (Aa) = 2.263603 in. sq. (Ext. = 1.890062 in. sq.)

===> Aa >= A (OPENING IS ADEQUATELY REINFORCED.) <===

ITEM NO. : V-2214 S/O NO. :
NOZ. MK. : N5

Page 50

****

---> N & C CONDITION <---

LIMITS :

HORIZONTAL LIMIT = 1.318 in.
VERTICAL LIMIT = .915 in.

STRENGTH RED. FACTORS :
---
fr (A2,A3 & A43) = .8571429
fr (A41) = .8571429
fr (A5 & A42) = 1

tr = 2.036412E-02 in.
trn = 1.023076E-03 in.

A = 6.373389E-02 in. sq.

A1 = 1.066137 in. sq.
A2 = .3372067 in. sq.
A3 = .1999543 in. sq.
A41 = 0 in. sq.
A43 = 0 in. sq.
[illegible] = 0 in. sq.
[illegible] = .9885001 in. sq.

AREA AVAIL. (Aa) = 2.591798 in. sq.

===> Aa >= A (OPENING IS ADEQUATELY REINFORCED.) <===

NOZZLE REINFORCEMENT (N6)


```
++++++++++++++++++++++++++++++++++++++++++++++++++++++++++++++++++++++++++++++++++++
          .......... Pressure Vessel Design Pro Corp. ..........
                                Houston Tx
++++++++++++++++++++++++++++++++++++++++++++++++++++++++++++++++++++++++++++++++++++

- File name & design pressures  ( # 1 )

File name              = V2214N6
Cust. name             = FMC
P.O. no.               = 96096.088
Item no.               = V-2214
S/o no.                =
Des. name              = CS HSU
Vess. name             = NO.2 FURNACE 2ND PASS SLURRY POT
Units (E/M)            = E
Mode desired (D/A)     = A


M.A.P.                 = 10/1.8
M.A.W.P.               = 10/1.8
Des. temp.             = 328

- Vessel & nozzle material  ( # 2 )

Vess. mat.             = SA 516 70
Allow. stress (n&c)    = 17500
Allow. stress (des.)   = 17500
Joint eff. (%)         = 100
Corr. allow.           = .0625
[illegible]. thk.            = 0.375
[illegible]s. ID              = 71.25

Nozz. mk.              = N6
Nozz. mat.             = SA 53 B
Allow. stress (n&c)    = 15000
Allow. stress (des.)   = 15000
Joint eff. (%)         = 100
Corr. allow.           = .0625

- Nozzle location  ( # 3 )

Location (S/H/C)       = S
Head type (E/F/H/FLG) =

0.9 use (Y/N)          =

Ins. crown rad.        =
Ins. kn. rad.          =
Factor M use (Y/N)     =

Head rad.              =

Cone ID (se)           =
Cone heigth            =
[illegible] to cone sm. (le) =
```

- Reinforcing type & material (# 4)

100% reinf. (Y/N) = N
Tr (n&c) =
Tr (des.) =

Nozzle type (R/I) = R

Pad mat. =
Allow. stress (n&c) =
Allow. stress (des.) =

Bevel deg. =
Nut stop/relief (S/R) =
Toler. @ nut stop =
Tol. @ nut space =

- Nozzle with reinforced pad (# 5)

Ins. proj. = 0
Nozzle size = 2
Nozz. thk. = 0.218
Nozz. OD = 2.375
Nozz. sch. = 80

[illegible]h pad (Y/N) = N
Pad thk. =
Pad width =

Weld thk. (outs.) =
Weld thk. (ins.) =
Weld thk. (pad) =

- Self reinforced nozzle (# 6)

Ins. proj. =
Nozzle size =
Nozz. thk. =
Nozz. OD =
Nozz. Rating/Sch. =

Outs. proj. =
Flange face (1/2/3) =
Dim. a =
Dim. b =
Dim. c =

Weld thk. (outs.) =
[illegible]ld thk.(ins.) =

```
++++++++++++++++++++++++++++++++++++++++++++++++++++++++++++++++++++++++++++++++
          .......... Pressure Vessel Design Pro Corp. ..........
                                Houston Tx
++++++++++++++++++++++++++++++++++++++++++++++++++++++++++++++++++++++++++++++++
```

- Calculation reports (# 7)

Weld calc. (Y/N)	= N
Calc. report (Y/N)	= Y
N&C report (Y/N)	= Y
Resuls only (Y/N)	= Y
Ext. P calc. (Y/N)	= Y
Hill side (Y/N)	= N
Ctr-Ctr dim.	=
Per 1-7(b) (Y/N)	= Y
Des. ext. press.	= 2.872E+07
Shell length	= 34.25
Tr (ext.) (N&C)	= .1875

- (# 8)

****

PRESSURE VESSEL DESIGN PRO CORP.
HOUSTON TX

****

---- NOZZLE REINFORCEMENT ----

CUSTOMER NAME : FMC
P.O. NO. : 96096.088
ITEM NO. : V-2214 S/O NO. :
DESIGNER NAME : CS HSU DATE : 08-13-1999

****

----- PER A.S.M.E. SECT. VIII DIV. I (LATEST ADDENDA) -----

---> DESIGN DATA <----

NOZ. DESCR. : (N6) 2 in. OPENING IN 71.25 in. ID SHELL

MAP & MAWP : 10 psi. (N&C) 10 psi. (DES.)

DES. TEMP. : 328 deg. F

VESSEL :

SHELL MAT. : SA 516 70
ALLOW. STRESS : 17500 psi. (N&C) 17500 psi. (DES.)
THK : .375 in. (N&C) .3125 in. (CORR.)
J.E. @ JUNCTION : 100 (%) C.A. = .0625 in.

NOZZLE :

NECK MAT. : SA 53 B
ALLOW. STRESS : 15000 psi. (N&C) 15000 psi. (DES.)
THK : .218 in. (N&C) .1555 in. (CORR.)
OD : 2.375 in. (80)
ID : 1.939 in. (N&C) 2.064 in. (CORR.)
J.E. @ JUNCTION : 100 (%) C.A. = .0625 in.

WELD THK @ NECK : 0 in. (OUTWARD)

---> Reinforced calculations not required per code.

NOZZLE REINFORCEMENT (N7)

++

..... Pressure Vessel Design Pro Corp. .....

Houston Tx

++

- File name & design pressures (# 1)

File name = V2214N7
Cust. name = FMC
P.O. no. = 96096.088
Item no. = V-2214
S/o no. =
Des. name = CS HSU
Vess. name = NO.2 FURNACE 2ND PASS SLURRY POT
Units (E/M) = E
Mode desired (D/A) = A

M.A.P. = 10/1.8
M.A.W.P. = 10/1.8
Des. temp. = 328

- Vessel & nozzle material (# 2)

Vess. mat. = SA 516 70
Allow. stress (n&c) = 17500
Allow. stress (des.) = 17500
Joint eff. (%) = 100
Corr. allow. = .0625
Vess. thk. = 0.375
Vess. ID = 71.25

Nozz. mk. = N7
Nozz. mat. = SA 53 B
Allow. stress (n&c) = 15000
Allow. stress (des.) = 15000
Joint eff. (%) = 100
Corr. allow. = .0625

- Nozzle location (# 3)

Location (S/H/C) = H
Head type (E/F/H/FLG) = F

0.9 use (Y/N) =

Ins. crown rad. = 72
Ins. kn. rad. = 4.5
Factor M use (Y/N) = Y

Head rad. =

Cone ID (se) =
Cone heigth =
Str. to cone sm. (le) =

```
++++++++++++++++++++++++++++++++++++++++++++++++++++++++++++++++++++++++++++++++++++
          .......... Pressure Vessel Design Pro Corp. ..........
                                  Houston Tx
++++++++++++++++++++++++++++++++++++++++++++++++++++++++++++++++++++++++++++++++++++

- Reinforcing type & material  ( # 4 )

100% reinf. (Y/N)      = N
Tr (n&c)               =
Tr (des.)              =

Nozzle type (R/I)      = R

Pad mat.               = SA 516 70
Allow. stress (n&c)    = 17500
Allow. stress (des.)   = 17500

Bevel deg.             =
Nut stop/relief (S/R)  =
Toler. @ nut stop      =
Tol. @ nut space       =

- Nozzle with reinforced pad  ( # 5 )

Ins. proj.             = 0
Nozzle size            = 10
Nozz. thk.             = 0.365
Nozz. OD               = 10.75
Nozz. sch.             = 40

[illegible]th pad (Y/N)        = Y
Pad thk.               = 0.375
Pad width              = 3


Weld thk. (outs.)      =
Weld thk. (ins.)       =
Weld thk. (pad)        =

- Self reinforced nozzle  ( # 6 )

Ins. proj.             =
Nozzle size            =
Nozz. thk.             =
Nozz. OD               =
Nozz. Rating/Sch.      =

Outs. proj.            =
Flange face (1/2/3)    =
Dim. a                 =
Dim. b                 =
Dim. c                 =

Weld thk. (outs.)      =
[illegible]ld thk.(ins.)       =
```

```
++++++++++++++++++++++++++++++++++++++++++++++++++++++++++++++++++++++++++++++++++++++++
          .......... Pressure Vessel Design Pro Corp. ..........
                                  Houston Tx
++++++++++++++++++++++++++++++++++++++++++++++++++++++++++++++++++++++++++++++++++++++++

- Calculation reports  ( # 7 )

Weld calc.   (Y/N)    = N
Calc. report (Y/N)    = Y
N&C report   (Y/N)    = Y
Resuls only (Y/N)     = Y
Ext. P calc. (Y/N)    = Y

Hill side (Y/N)       = N
Ctr-Ctr dim.          =

Per 1-7(b) (Y/N)      = Y

Des. ext. press.      = 2.872E+07
Shell length          = 34.25
Tr (ext.) (N&C)       = .1875

-   ( # 8 )
```

****

PRESSURE VESSEL DESIGN PRO CORP.
HOUSTON TX

****

---- NOZZLE REINFORCEMENT ----

CUSTOMER NAME : FMC
P.O. NO. : 96096.088
ITEM NO. : V-2214 S/O NO. :
DESIGNER NAME : CS HSU DATE : 08-13-1999

****

----- PER A.S.M.E. SECT. VIII DIV. I (LATEST ADDENDA) -----

---> DESIGN DATA <----

NOZ. DESCR. : (N7) 10 in. OPENING IN 71.25 in. ID F & D HD

MAP & MAWP : 10 psi. (N&C) 10 psi. (DES.)

DES. TEMP. : 328 deg. F

VESSEL :

F & D HD MAT. : SA 516 70
ALLOW. STRESS : 17500 psi. (N&C) 17500 psi. (DES.)
THK : .375 in. (N&C) .3125 in. (CORR.)
INS. CROWN RAD. : 72 in. (N&C) 72.0625 in. (CORR.)
INS. KNUCKLE RAD. : 4.5 in. FACTOR M = 1.75
J.E. @ JUNCTION : 100 (%) C.A. = .0625 in.

NOZZLE :

NECK MAT. : SA 53 B
ALLOW. STRESS : 15000 psi. (N&C) 15000 psi. (DES.)
THK : .365 in. (N&C) .3025 in. (CORR.)
OD : 10.75 in. (40)
ID : 10.02 in. (N&C) 10.145 in. (CORR.)
J.E. @ JUNCTION : 100 (%) C.A. = .0625 in.

WELD THK @ NECK : 0 in. (OUTWARD)

REINF. PAD :

PAD : .375 in. THK X 3 in. WIDE W/ 0 in. THK WELD @ PAD
MAT. : SA 516 70
ALLOW. STRESS : 17500 psi. (N&C) 17500 psi. (DES.)

ITEM NO. : V-2214 S/O NO. :
NOZ. MK. : N7

****

---> DESIGN CONDITION <---

LIMITS :

HORIZONTAL LIMIT = 4.770001 in.
VERTICAL LIMIT = .78125 in.

STRENGTH RED. FACTORS :
---
fr (A2,A3 & A43) = .8571429
fr (A41) = .8571429
fr (A5 & A42) = 1

tr = 3.603331E-02 in. (Ext. = .125 in.)
trn = 3.38302E-03 in. (Ext. = .0671875 in.)

A = .3686723 in. sq. (Ext. = .6448661 in. sq.)

A1 = 2.78086 in. sq. (Ext. = 1.885982 in. sq.)
A2 = .4006031 in. sq. (Ext. = .3151507 in. sq.)
A3 = 0 in. sq.
A41 = 0 in. sq.
A43 = 0 in. sq.
= 0 in. sq.
= 2.25 in. sq.

AREA AVAIL. (Aa) = 5.431463 in. sq. (Ext. = 4.451133 in. sq.)

===> Aa >= A (OPENING IS ADEQUATELY REINFORCED.) <===

ITEM NO. : V-2214 S/O NO. :
NOZ. MK. : N7

****

---> N & C CONDITION <---

LIMITS :

HORIZONTAL LIMIT = 4.645001 in.
VERTICAL LIMIT = .9375 in.

STRENGTH RED. FACTORS :
---
fr (A2,A3 & A43) = .8571429
fr (A41) = .8571429
fr (A5 & A42) = 1

tr = 3.600206E-02 in.
trn = 3.341337E-03 in.

A = .3644951 in. sq.

A1 = 3.361407 in. sq.
A2 = .5812371 in. sq.
A3 = 0 in. sq.
A41 = 0 in. sq.
A43 = 0 in. sq.
= 0 in. sq.
= 2.25 in. sq.

AREA AVAIL. (Aa) = 6.192644 in. sq.

===> Aa >= A (OPENING IS ADEQUATELY REINFORCED.) <===

NOZZLE REINFORCEMENT (N8)

++

..... Pressure Vessel Design Pro Corp. .....

Houston Tx

++

- File name & design pressures (# 1)

File name = V2214N8
Cust. name = FMC
P.O. no. = 96096.088
Item no. = V-2214
S/o no. =
Des. name = CS HSU
Vess. name = NO.2 FURNACE 2ND PASS SLURRY POT
Units (E/M) = E
Mode desired (D/A) = A

M.A.P. = 10/1.8
M.A.W.P. = 10/1.8
Des. temp. = 328

- Vessel & nozzle material (# 2)

Vess. mat. = SA 516 70
Allow. stress (n&c) = 17500
Allow. stress (des.) = 17500
Joint eff. (%) = 100
Corr. allow. = .0625
Ves. thk. = 0.375
Ves. ID = 71.25

Nozz. mk. = N8
Nozz. mat. = SA 53 B
Allow. stress (n&c) = 15000
Allow. stress (des.) = 15000
Joint eff. (%) = 100
Corr. allow. = .0625

- Nozzle location (# 3)

Location (S/H/C) = H
Head type (E/F/H/FLG) = F

0.9 use (Y/N) =

Ins. crown rad. = 72
Ins. kn. rad. = 4.5
Factor M use (Y/N) = Y

Head rad. =

Cone ID (se) =
Cone heigth =
Ctr. to cone sm. (le) =

- Reinforcing type & material (# 4)

100% reinf. (Y/N) = N
Tr (n&c) =
Tr (des.) =

Nozzle type (R/I) = R

Pad mat. = SA 516 70
Allow. stress (n&c) = 17500
Allow. stress (des.) = 17500

Bevel deg. =
Nut stop/relief (S/R) =
Toler. @ nut stop =
Tol. @ nut space =

- Nozzle with reinforced pad (# 5)

Ins. proj. = 0
Nozzle size = 4
Nozz. thk. = 0.237
Nozz. OD = 4.5
Nozz. sch. = 40

th pad (Y/N) = N
Pad thk. =
Pad width =

Weld thk. (outs.) =
Weld thk. (ins.) =
Weld thk. (pad) =

- Self reinforced nozzle (# 6)

Ins. proj. =
Nozzle size =
Nozz. thk. =
Nozz. OD =
Nozz. Rating/Sch. =

Outs. proj. =
Flange face (1/2/3) =
Dim. a =
Dim. b =
Dim. c =

Weld thk. (outs.) =
ld thk.(ins.) =

++

..... Pressure Vessel Design Pro Corp. .....

Houston Tx

++

Calculation reports (# 7)

Weld calc. (Y/N)	= N
Calc. report (Y/N)	= Y
N&C report (Y/N)	= Y
Resuls only (Y/N)	= Y
Ext. P calc. (Y/N)	= Y
Hill side (Y/N)	= N
Ctr-Ctr dim.	=
Per 1-7(b) (Y/N)	= Y
Des. ext. press.	= 2.872E+07
Shell length	= 34.25
Tr (ext.) (N&C)	= .1875

- (# 8)

****

PRESSURE VESSEL DESIGN PRO CORP.
HOUSTON TX

****

---- NOZZLE REINFORCEMENT ----

CUSTOMER NAME : FMC
P.O. NO. : 96096.088
ITEM NO. : V-2214 S/O NO. :
DESIGNER NAME : CS HSU DATE : 08-13-1999

****

----- PER A.S.M.E. SECT. VIII DIV. I (LATEST ADDENDA) -----

---> DESIGN DATA <----

NOZ. DESCR. : (N8) 4 in. OPENING IN 71.25 in. ID F & D HD

MAP & MAWP : 10 psi. (N&C) 10 psi. (DES.)

DES. TEMP. : 328 deg. F

VESSEL :

F D HD MAT. : SA 516 70
ALLOW. STRESS : 17500 psi. (N&C) 17500 psi. (DES.)
THK : .375 in. (N&C) .3125 in. (CORR.)
INS. CROWN RAD. : 72 in. (N&C) 72.0625 in. (CORR.)
INS. KNUCKLE RAD. : 4.5 in. FACTOR M = 1.75
J.E. @ JUNCTION : 100 (%) C.A. = .0625 in.

NOZZLE :

NECK MAT. : SA 53 B
ALLOW. STRESS : 15000 psi. (N&C) 15000 psi. (DES.)
THK : .237 in. (N&C) .1745 in. (CORR.)
OD : 4.5 in. (40)
ID : 4.026 in. (N&C) 4.151 in. (CORR.)
J.E. @ JUNCTION : 100 (%) C.A. = .0625 in.

WELD THK @ NECK : 0 in. (OUTWARD)

ITEM NO. : V-2214 S/O NO. :
NOZ. MK. : N8

****

---> DESIGN CONDITION <---

LIMITS :

HORIZONTAL LIMIT = 1.901 in.
VERTICAL LIMIT = .43625 in.

STRENGTH RED. FACTORS :
---
fr (A2,A3 & A43) = .8571429
fr (A41) = .8571429

tr = 3.603331E-02 in. (Ext. = .125 in.)
trn = 1.38422E-03 in. (Ext. = .028125 in.)

A = .1513708 in. sq. (Ext. = .2656696 in. sq.)

A1 = 1.133829 in. sq. (Ext. = .7689643 in. sq.)
A2 = .1294659 in. sq. (Ext. = .1094676 in. sq.)
A3 = 0 in. sq.
A41 = 0 in. sq.
A43 = 0 in. sq.

AVAIL. (AA) = A1 + A2 + A3 + A41 + A43
= 1.133829 + .1294659 + 0 + 0 + 0
= 1.263295 in. sq. (Ext. = .8784319 in. sq.)

===> Aa >= A (OPENING IS ADEQUATELY REINFORCED.) <===

ITEM NO. : V-2214 S/O NO. :
NOZ. MK. : N8

****

---> N & C CONDITION <---

LIMITS :

HORIZONTAL LIMIT = 1.776 in.
VERTICAL LIMIT = .5925 in.

STRENGTH RED. FACTORS :
---
fr (A2,A3 & A43) = .8571429
fr (A41) = .8571429

tr = 3.600206E-02 in.
trn = 1.342537E-03 in.

A = .1473822 in. sq.

A1 = 1.341851 in. sq.
A2 = .2393607 in. sq.
A3 = 0 in. sq.
A41 = 0 in. sq.
A43 = 0 in. sq.

Aa AVAIL. (AA) = A1 + A2 + A3 + A41 + A43
= 1.341851 + .2393607 + 0 + 0 + 0
= 1.581211 in. sq.

===> Aa >= A (OPENING IS ADEQUATELY REINFORCED.) <===

NOZZLE REINFORCEMENT (M1)

..... Pressure Vessel Design Pro Corp. .....
Houston Tx

- File name & design pressures (# 1)

File name = V2214M1
Cust. name = FMC
P.O. no. = 96096.088
Item no. = V-2214
S/o no. =
Des. name = CS HSU
Vess. name = NO.2 FURNACE 2ND PASS SLURRY POT
Units (E/M) = E
Mode desired (D/A) = A

M.A.P. = 10/1.8
M.A.W.P. = 10/1.8
Des. temp. = 328

- Vessel & nozzle material (# 2)

Vess. mat. = SA 516 70
Allow. stress (n&c) = 17500
Allow. stress (des.) = 17500
Joint eff. (%) = 100
Corr. allow. = .0625
Vess. thk. = 0.375
Vess. ID = 71.25

Nozz. mk. = M1
Nozz. mat. = SA 53 B
Allow. stress (n&c) = 15000
Allow. stress (des.) = 15000
Joint eff. (%) = 100
Corr. allow. = .0625

- Nozzle location (# 3)

Location (S/H/C) = S
Head type (E/F/H/FLG) =

0.9 use (Y/N) =

Ins. crown rad. =
Ins. kn. rad. =
Factor M use (Y/N) =

Head rad. =

Cone ID (se) =
Cone heigth =
Dist. to cone sm. (le) =

..... Pressure Vessel Design Pro Corp. .....
Houston Tx

- Reinforcing type & material (# 4)

100% reinf. (Y/N) = N
Tr (n&c) =
Tr (des.) =

Nozzle type (R/I) = R

Pad mat. = SA 516 70
Allow. stress (n&c) = 17500
Allow. stress (des.) = 17500

Bevel deg. =
Nut stop/relief (S/R) =
Toler. @ nut stop =
Tol. @ nut space =

- Nozzle with reinforced pad (# 5)

Ins. proj. = 0
Nozzle size = 22
Nozz. thk. = 0.375
Nozz. OD = 22
Nozz. sch. = STD

[illegible]h pad (Y/N) = N
Pad thk. =
Pad width =

Weld thk. (outs.) =
Weld thk. (ins.) =
Weld thk. (pad) =

- Self reinforced nozzle (# 6)

Ins. proj. =
Nozzle size =
Nozz. thk. =
Nozz. OD =
Nozz. Rating/Sch. =

Outs. proj. =
Flange face (1/2/3) =
Dim. a =
Dim. b =
Dim. c =

Weld thk. (outs.) =
[illegible]ld thk.(ins.) =

..... Pressure Vessel Design Pro Corp. .....
Houston Tx

- Calculation reports (# 7)

Weld calc. (Y/N) = N
Calc. report (Y/N) = Y
N&C report (Y/N) = Y
Resuls only (Y/N) = Y
Ext. P calc. (Y/N) = Y

Hill side (Y/N) = N
Ctr-Ctr dim. =

Per 1-7(b) (Y/N) = Y

Des. ext. press. = 2.872E+07
Shell length = 34.25
Tr (ext.) (N&C) = .1875

- (# 8)

****

PRESSURE VESSEL DESIGN PRO CORP.
HOUSTON TX

****

---- NOZZLE REINFORCEMENT ----

CUSTOMER NAME : FMC
P.O. NO. : 96096.088
ITEM NO. : V-2214 S/O NO. :
DESIGNER NAME : CS HSU DATE : 08-13-1999

****

----- PER A.S.M.E. SECT. VIII DIV. I (LATEST ADDENDA) -----

---> DESIGN DATA <----

NOZ. DESCR. : (M1) 22 in. OPENING IN 71.25 in. ID SHELL

MAP & MAWP : 10 psi. (N&C) 10 psi. (DES.)

DES. TEMP. : 328 deg. F

VESSEL :

SHELL MAT. : SA 516 70
ALLOW. STRESS : 17500 psi. (N&C) 17500 psi. (DES.)
THK : .375 in. (N&C) .3125 in. (CORR.)
J.E. @ JUNCTION : 100 (%) C.A. = .0625 in.

NOZZLE :

NECK MAT. : SA 53 B
ALLOW. STRESS : 15000 psi. (N&C) 15000 psi. (DES.)
THK : .375 in. (N&C) .3125 in. (CORR.)
OD : 22 in. (STD)
ID : 21.25 in. (N&C) 21.375 in. (CORR.)
J.E. @ JUNCTION : 100 (%) C.A. = .0625 in.

WELD THK @ NECK : 0 in. (OUTWARD)

ITEM NO. : V-2214 S/O NO. :
NOZ. MK. : M1

****

---> DESIGN CONDITION <---

LIMITS :

HORIZONTAL LIMIT = 10.375 in.
VERTICAL LIMIT = .78125 in.

STRENGTH RED. FACTORS :
---
fr (A2,A3 & A43) = .8571429
fr (A41) = .8571429

tr = 2.039985E-02 in. (Ext. = .125 in.)
trn = 7.127851E-03 in. (Ext. = .11 in.)

A = .4378682 in. sq. (Ext. = 1.347098 in. sq.)

A1 = 6.217561 in. sq. (Ext. = 3.991072 in. sq.)
A2 = .4089806 in. sq. (Ext. = .2712054 in. sq.)
A3 = 0 in. sq.
A41 = 0 in. sq.
A43 = 0 in. sq.

AVAIL. (AA) = A1 + A2 + A3 + A41 + A43
= 6.217561 + .4089806 + 0 + 0 + 0
= 6.626541 in. sq. (Ext. = 4.262277 in. sq.)

===> Aa >= A (OPENING IS ADEQUATELY REINFORCED.) <===

ITEM NO. : V-2214 S/O NO. :
NOZ. MK. : M1

****

---> N & C CONDITION <---

LIMITS :

HORIZONTAL LIMIT = 10.25 in.
VERTICAL LIMIT = .9375 in.

STRENGTH RED. FACTORS :
---
fr (A2,A3 & A43) = .8571429
fr (A41) = .8571429

tr = 2.036412E-02 in.
trn = 7.086168E-03 in.

A = .4349195 in. sq.

A1 = 7.498015 in. sq.
A2 = .5912901 in. sq.
A3 = 0 in. sq.
A41 = 0 in. sq.
A43 = 0 in. sq.

AVAIL. (AA) = A1 + A2 + A3 + A41 + A43
= 7.498015 + .5912901 + 0 + 0 + 0
= 8.089306 in. sq.

===> Aa >= A (OPENING IS ADEQUATELY REINFORCED.) <===

LOCAL STRESS ANALYSIS (N1)

..... Pressure Vessel Design Pro Corp. .....
Houston Tx

- File name & Design pressures (# 1)

File name = V2214AGT
Cust. name = FMC
P.O. no. = 96096.088
Item no. = V-2214
S/o no. =
Des. name = CS HSU
Unit (E/M) = E

MAP (n&c) = 10
MAWP (des.) = 10
Des. temp. = 328

Attach. loc. (S/H) = S

- Vess. material & Attachment dimensions (# 2)

Vess. mat. = SA 516 70
Allow. stress (des.) = 17500
Vess. thk./Pad thk. = 0.375/0.375
Corr. allow. = 0.0625
Shell ID or Head rad. = 71.25

Attach. mark = N1
Attach. type (C/R) = C
Attach. ID = 20.4632
Attach. OD/Pad OD = 21.2132/27.2132
Rad. @ nozz. interf. =
Hollow or Solid (1/2) = 1
Dim. Cl/Clp =
Dim. Cc/Ccp =

- Forces & Moments (Spherical) (# 3)

Radial load P =
Shear load V1 =
Shear load V2 =

Moment M1 =
Moment M2 =
Moment MT =

Factor Kn or 0 =
Factor Kb or 0 =
Factor Iv or 0 =

Output (S/P) =

..... Pressure Vessel Design Pro Corp. .....
Houston Tx

- Forces & Moments (Cylindrical) (# 4)

Radial load P	=
Shear load Vc	=
Shear load Vl	= 750
Moment Ml	= 22500
Moment Mc	=
Moment MT	=
Factor Kn or 0	= 0
Factor Kb or 0	= 0
Factor Iv or 0	= 0
Output (S/P)	= P

- (# 5)

****

PRESSURE VESSEL DESIGN PRO CORP.
HOUSTON TX

****

--- COMPUTATION OF LOCAL STRESSES ---

CUSTOMER NAME : FMC

P.O. NO. : 96096.088

ITEM NO. : V-2214 S/O NO. :

DESIGNER NAME : CS HSU DATE : 08-16-1999

****

--- Stresses in Cylindrical Shell ---
(@ Attachment)

Attachment Mk. : N1

M.A.W.P. : 10 psi.
Des. temp. : 328 deg. F

Vessel

Cyl. ID. : 71.25 in. Cyl. mean rad. : 36.03125 in. (corr.)
Cyl. thk. : .75 in. (.6875 in. (corr.))
Material : SA 516 70
Allow. stress : 17500 psi.

Attachment

Shape : Cylindrical
OD : 21.2132 in. Outs. rad. : 10.6066 in.
Rad. @ nozz. interface : .375 in.

Loads & Moments

Radial load P : 0 lb.
Shear load Vc : 0 lb.
Shear load Vl : 750 lb.
Moment Mc : 0 in.-lb.
Moment Ml : 22500 in.-lb.
Moment Mt : 0 in.-lb.

Stress coefficient factors

Kn : 1.759371	Kb : 1.470885	Iv : 1	
C1a : 3.098061	C1b : 6.046403	C2a : 6.096363E-02	C2b : 1.839334E-02
C3 : 1.832772	C4 : 6.302309E-02	C5 : 4.152959	C6 : 1.602309E-02
L1a : 3.098061	L1b : 6.046403	L2a : 4.148067E-02	L2b : .035
L3 : 4.886038	L4 : 2.642248E-02	L5 : 2.034232	L6 : .025734

Item no. : V-2214 S/o no. :

Page 76

****

[illegible]metric parameters

Gamma = Rm/T = 36.03125 / .6875
= 52.40909

Ã = .875(Ro/Rm) = .875 (10.6066 / 36.03125)
= .2575757

Circumferential stresses : (@ Attachment)

Membrane due to P (İc1) = Kn(C1x)(P/(Rm(T)))
= 1.759371 (C1x) (0 / (36.03125 (.6875)))
= 0 psi. (0 psi.)

Bending due to P (İc2) = Kb(C2x)(6(P)/(T^2))
= 1.470885 (C2x) (6 (0) / (.6875 ^ 2))
= 0 psi. (0 psi.)

Membrane due to Mc (İc3) = Kn(C3)(Mc/((Rm^2)(Ã)(T)))
= 1.759371 (1.832772) (0 / ((36.03125 ^ 2) (.2575757) (.6875)))
= 0 psi.

Bending due to Mc (İc4) = Kb(C4)(6(Mc)/((T^2)(Rm)(Ã)))
= 1.470885 (6.302309E-02) (6 (0) / ((.6875) (36.03125) (.2575757)))
= 0 psi.

Membrane due to Ml (İc5) = Kn(C5)(Ml/((Rm^2)(Ã)(T)))
= 1.759371 (4.152959) (22500 / ((36.03125 ^ 2) (.2575757) (.6875)))
= 715 psi.

Bending due to Ml (İc6) = Kb(C6)(6(Ml)/((T^2)(Rm)(Ã)))
= 1.470885 (1.602309E-02) (6 (22500) / ((.6875 ^ 2) (36.03125) (.2575757)))
= 725 psi.

Press. stress (İc7) = Dp(Rm)(Iv)/(T)
= 10 (36.03125) (1) / (.6875)
= 524 psi.

Stresses	Au	Al	Bu	Bl	Cu	Cl	Du	Dl
-σc 1	0	0	0	0	0	0	0	0
-σc 2	0	0	0	0	0	0	0	0
-σc 3	0	0	0	0	0	0	0	0
-σc 4	0	0	0	0	0	0	0	0
-σc 5	-715	-715	715	715	0	0	0	0
-σc 6	-725	725	725	-725	0	0	0	0
[illegible]	-1440	10	1440	-10	0	0	0	0
[illegible]	524	524	524	524	524	524	524	524
-σct	-916	534	1964	514	524	524	524	524

↕

****

metric parameters

Gamma = 52.40909

B = .2575757

Longitudinal stresses : (@ Attachment)

Membrane due to P ($\sigma l1$) = Kn(L1x)(P/(Rm(T)))
= 1.759371 (L1x) (0 / (36.03125 (.6875)))
= 0 psi. (0 psi.)

Bending due to P ($\sigma l2$) = Kb(L2x)(6(P)/(T^2))
= 1.470885 (L2x) (6 (0) / (.6875 ^ 2))
= 0 psi. (0 psi.)

Membrane due to Mc ($\sigma l3$) = Kn(L3)(Mc/((Rm^2)(B)(T)))
= 1.759371 (4.886038) (0 / ((36.03125 ^ 2) (.2575757) (.6875)))
= 0 psi.

Bending due to Mc ($\sigma l4$) = Kb(L4)(6(Mc)/((T^2)(Rm)(B)))
= 1.470885 (2.642248E-02) (6 (0) / ((.6875 ^ 2) (36.03125) (.2575757)))
= 0 psi.

mbrane due to Ml ($\sigma l5$) = Kn(L5)(Ml/((Rm^2)(B)(T)))
= 1.759371 (2.034232) (22500 / ((36.03125 ^ 2) (.2575757) (.6875)))
= 350 psi.

Bending due to Ml ($\sigma l6$) = Kb(L6)(6(Ml)/((T^2)(Rm)(B)))
= 1.470885 (.025734) (6 (22500) / ((.6875 ^ 2) (36.03125) (.2575757)))
= 1165 psi.

Press. stress ($\sigma l7$) = Dp(Rm)(Iv)/(2(T))
= 10 (36.03125) (1) / (2 (.6875))
= 262 psi.

Stresses	Au	Al	Bu	Bl	Cu	Cl	Du	Dl
-σl 1	0	0	0	0	0	0	0	0
-σl 2	0	0	0	0	0	0	0	0
-σl 3	0	0	0	0	0	0	0	0
-σl 4	0	0	0	0	0	0	0	0
-σl 5	-350	-350	350	350	0	0	0	0
-σl 6	-1165	1165	1165	-1165	0	0	0	0
-σl	-1515	815	1515	-815	0	0	0	0
-σp	262	262	262	262	262	262	262	262
t	-1253	1077	1777	-553	262	262	262	262

Item no. : V-2214 S/o no. :

Page 78

****

Shear stresses : (@ Attachment)

Shear due to Vl (σs1) = Vl/(3.1416(Ro)(T))
= 750 / (3.1416 (10.6066) (.6875))
= 33 psi.

Shear due to Vc (σs2) = Vc/(3.1416(Ro)(T))
= 0 / (3.1416 (10.6066) (.6875))
= 0 psi.

Shear due to Mt (σs3) = Mt/(3.1416(Ro^2)(2)(T))
= 0 / (3.1416 (10.6066 ^ 2) (2) (.6875))
= 0 psi.

Stresses	Au	Al	Bu	Bl	Cu	Cl	Du	Dl
-σs 1	0	0	0	0	-33	-33	33	33
-σs 2	0	0	0	0	0	0	0	0
-σs 3	0	0	0	0	0	0	0	0
-σst	0	0	0	0	-33	-33	33	33

‡‡

Combined stress intensity :

- When σst = 0

σ (comb.) = The larger of :
1) σct
2) σlt
3) σlt - σct

- When σst <> 0

σ (comb.) = The larger of :
1) 0.5[σlt+σct+Sqr.((σlt-σct)^2+4(σst^2))]
2) 0.5[σlt+σct-Sqr.((σlt-σct)^2+4(σst^2))]
3) Sqr.((σlt-σct)^2+4(σst^2)))

Stresses	Au	Al	Bu	Bl	Cu	Cl	Du	Dl
-σs (comb.)	-1254	1077	1964	-1068	528	528	528	528

‡‡

****

PRESSURE VESSEL DESIGN PRO CORP.
HOUSTON TX

****

--- COMPUTATION OF LOCAL STRESSES ---

CUSTOMER NAME : FMC

P.O. NO. : 96096.088

ITEM NO. : V-2214 S/O NO. :

DESIGNER NAME : CS HSU DATE : 08-16-1999

****

--- Stresses in Cylindrical Shell ---
(@ Pad outer edge)

Attachment Mk. : N1

M.A.W.P. : 10 psi.
Des. temp. : 328 deg. F

Vessel

Cyl. ID. : 71.25 in. Cyl. mean rad. : 35.84375 in. (corr.)
Cyl. thk. : .375 in. (.3125 in. (corr.))
Material : SA 516 70
Allow. stress : 17500 psi.

Attachment

Shape : Cylindrical
OD : 27.2132 in. Outs. rad. : 13.6066 in.
Rad. @ nozz. interface : .375 in.

Loads & Moments

Radial load P : 0 lb.
Shear load Vc : 0 lb.
Shear load Vl : 750 lb.
Moment Mc : 0 in.-lb.
Moment Ml : 22500 in.-lb.
Moment Mt : 0 in.-lb.

Stress coefficient factors

Kn : 1.454862	Kb : 1.250597	Iv : 1	
C1a : 2.279193	C1b : 7.643965	C2a : .06147	C2b : 5.083483E-03
C3 : 2.235146	C4 : 5.166394E-02	C5 : 4.28363	C6 : 6.157282E-03
L1a : 2.279193	L1b : 7.643965	L2a : 1.489799E-02	L2b : .041412
L3 : 9.693491	L4 : 1.966393E-02	L5 : 2.330939	L6 : 1.176885E-02

****

metric parameters

Gamma = Rm/T = 35.84375 / .3125
= 114.7

Ā = .875(Ro/Rm) = .875 (13.6066 / 35.84375)
= .3321576

Circumferential stresses : (@ Pad outer edge)

Membrane due to P (İc1) = Kn(C1x)(P/(Rm(T)))
= 1.454862 (C1x) (0 / (35.84375 (.3125)))
= 0 psi. (0 psi.)

Bending due to P (İc2) = Kb(C2x)(6(P)/(T^2))
= 1.250597 (C2x) (6 (0) / (.3125 ^ 2))
= 0 psi. (0 psi.)

Membrane due to Mc (İc3) = Kn(C3)(Mc/((Rm^2)(Ā)(T)))
= 1.454862 (2.235146) (0 / ((35.84375 ^ 2) (.3321576) (.3125)))
= 0 psi.

Bending due to Mc (İc4) = Kb(C4)(6(Mc)/((T^2)(Rm)(Ā)))
= 1.250597 (5.166394E-02) (6 (0) / ((.3125) (35.84375) (.3321576)))
= 0 psi.

Membrane due to Ml (İc5) = Kn(C5)(Ml/((Rm^2)(Ā)(T)))
= 1.454862 (4.28363) (22500 / ((35.84375 ^ 2) (.3321576) (.3125)))
= 1051 psi.

Bending due to Ml (İc6) = Kb(C6)(6(Ml)/((T^2)(Rm)(Ā)))
= 1.250597 (6.157282E-03) (6 (22500) / ((.3125 ^ 2) (35.84375) (.3321576)))
= 894 psi.

Press. stress (İc7) = Dp(Rm)(Iv)/(T)
= 10 (35.84375) (1) / (.3125)
= 1147 psi.

Stresses	Au	Al	Bu	Bl	Cu	Cl	Du	Dl
-σc 1	0	0	0	0	0	0	0	0
-σc 2	0	0	0	0	0	0	0	0
-σc 3	0	0	0	0	0	0	0	0
-σc 4	0	0	0	0	0	0	0	0
-σc 5	-1051	-1051	1051	1051	0	0	0	0
-σc 6	-894	894	894	-894	0	0	0	0
	-1945	-157	1945	157	0	0	0	0
	1147	1147	1147	1147	1147	1147	1147	1147
-σct	-798	990	3092	1304	1147	1147	1147	1147

‡

Item no. : V-2214 S/o no. :

Page 81

****

ometric parameters

Gamma = 114.7

B = .3321576

Longitudinal stresses : (@ Pad outer edge)

Membrane due to P (σl1) = Kn(L1x)(P/(Rm(T)))
= 1.454862 (L1x) (0 / (35.84375 (.3125)))
= 0 psi. (0 psi.)

Bending due to P (σl2) = Kb(L2x)(6(P)/(T^2))
= 1.250597 (L2x) (6 (0) / (.3125 ^ 2))
= 0 psi. (0 psi.)

Membrane due to Mc (σl3) = Kn(L3)(Mc/((Rm^2)(B)(T)))
= 1.454862 (9.693491) (0 / ((35.84375 ^ 2) (.3321576) (.3125)))
= 0 psi.

Bending due to Mc (σl4) = Kb(L4)(6(Mc)/((T^2)(Rm)(B)))
= 1.250597 (1.966393E-02) (6 (0) / ((.3125 ^ 2) (35.84375) (.3321576)))
= 0 psi.

Membrane due to Ml (σl5) = Kn(L5)(Ml/((Rm^2)(B)(T)))
= 1.454862 (2.330939) (22500 / ((35.84375 ^ 2) (.3321576) (.3125)))
= 572 psi.

Bending due to Ml (σl6) = Kb(L6)(6(Ml)/((T^2)(Rm)(B)))
= 1.250597 (1.176885E-02) (6 (22500) / ((.3125 ^ 2) (35.84375) (.3321576)))
= 1709 psi.

Press. stress (σl7) = Dp(Rm)(Iv)/(2(T))
= 10 (35.84375) (1) / (2 (.3125))
= 574 psi.

Stresses	Au	Al	Bu	Bl	Cu	Cl	Du	Dl
-σl 1	0	0	0	0	0	0	0	0
-σl 2	0	0	0	0	0	0	0	0
-σl 3	0	0	0	0	0	0	0	0
-σl 4	0	0	0	0	0	0	0	0
-σl 5	-572	-572	572	572	0	0	0	0
-σl 6	-1709	1709	1709	-1709	0	0	0	0
-σl	-2281	1137	2281	-1137	0	0	0	0
-σp	574	574	574	574	574	574	574	574
lt	-1707	1711	2855	-563	574	574	574	574

****

ear stresses : (@ Pad outer edge)

Shear due to Vl (σs1) = Vl/(3.1416(Ro)(T))
= 750 / (3.1416 (13.6066) (.3125))
= 56 psi.

Shear due to Vc (σs2) = Vc/(3.1416(Ro)(T))
= 0 / (3.1416 (13.6066) (.3125))
= 0 psi.

Shear due to Mt (σs3) = Mt/(3.1416(Ro^2)(2)(T))
= 0 / (3.1416 (13.6066 ^ 2) (2) (.3125))
= 0 psi.

Stresses	Au	Al	Bu	Bl	Cu	Cl	Du	Dl
-σs 1	0	0	0	0	-56	-56	56	56
-σs 2	0	0	0	0	0	0	0	0
-σs 3	0	0	0	0	0	0	0	0
-σst	0	0	0	0	-56	-56	56	56

‡‡

Combined stress intensity :

---

hen σst = 0

σ (comb.) = The larger of :
1) σct
2) σlt
3) σlt - σct

- When σst <> 0

σ (comb.) = The larger of :
1) 0.5[σlt+σct+Sqr.((σlt-σct)^2+4(σst^2))]
2) 0.5[σlt+σct-Sqr.((σlt-σct)^2+4(σst^2))]
3) Sqr.((σlt-σct)^2+4(σst^2)))

Stresses	Au	Al	Bu	Bl	Cu	Cl	Du	Dl
-σs (comb.)	-1708	1711	3092	-1868	1152	1152	1152	1152

‡‡

LOCAL STRESS ANALYSIS (N7)

..... Pressure Vessel Design Pro Corp. .....
Houston Tx

- File name & Design pressures (# 1)

File name = V2214DRN
Cust. name = FMC
P.O. no. = 96096.088
Item no. = V-2214
S/o no. =
Des. name = CS HSU
Unit (E/M) = E

MAP (n&c) = 10
MAWP (des.) = 10
Des. temp. = 328

Attach. loc. (S/H) = H

- Vess. material & Attachment dimensions (# 2)

Vess. mat. = SA 516 70
Allow. stress (des.) = 17500
Vess. thk./Pad thk. = 0.375/0.375
Corr. allow. = 0.0625
Shell ID or Head rad. = 71.25

Attach. mark = N7
Attach. type (C/R) = C
Attach. ID = 10.02
Attach. OD/Pad OD = 10.75/16.75
Rad. @ nozz. interf. =
Hollow or Solid (1/2) = 1
Dim. Cl/Clp =
Dim. Cc/Ccp =

- Forces & Moments (Spherical) (# 3)

Radial load P = 2200
Shear load V1 =
Shear load V2 =

Moment M1 = 13800
Moment M2 =
Moment MT =

Factor Kn or 0 = 0
Factor Kb or 0 = 0
Factor Iv or 0 = 0

Output (S/P) = P

Forces & Moments (Cylindrical) (# 4)

Radial load P	= 460
Shear load Vc	=
Shear load Vl	= 460
Moment Ml	= 22500
Moment Mc	=
Moment MT	=
Factor Kn or 0	= 0
Factor Kb or 0	= 0
Factor Iv or 0	= 0
Output (S/P)	= P

- (# 5)

****

PRESSURE VESSEL DESIGN PRO CORP.
HOUSTON TX

****

--- COMPUTATION OF LOCAL STRESSES ---

CUSTOMER NAME : FMC

P.O. NO. : 96096.088

ITEM NO. : V-2214 S/O NO. :

DESIGNER NAME : CS HSU DATE : 08-16-1999

****

--- Stresses in Spherical head ---
(@ Attachment)

Attachment Mk. : N7

M.A.W.P. : 10 psi.
Des. temp. : 328 deg. F

Vessel
---
d rad. : 71.25 in. Head mean rad. : 71.65625 in. (corr.)
d thk. : .75 in. (.6875 in. (corr.))
Material : SA 516 70
Allow. stress : 17500 psi.

Attachment

Shape : Cylindrical
OD : 10.75 in. Outs. rad. : 5.375 in.
Rad. @ nozz. interface : .375 in.

Loads & Moments

Radial load P : 2200 lb.
Shear load V1 : 0 lb.
Shear load V2 : 0 lb.
Moment M1 : 13800 in.-lb.
Moment M2 : 0 in.-lb.
Moment Mt : 0 in.-lb.

Stress coefficient factors

Kn : 1.759371	Kb : 1.470885	Iv : 1	
R1 : 3.483746E-02	R2 : 3.141853E-02	R3 : .0517756	R4 : 6.392491E-02
T1 : .1369678	T2 : 2.107777E-02	T3 : .1378333	T4 : 4.789065E-02

Item no. : V-2214 S/o no. :

****

metric parameters

U = Ro/(Sqr.(Rm(T)))
= 5.375 / (Sqr. (71.65625 (.6875))) = .7657995

Tx = rm/t = 5.22375 / .3024998 = 17.26861

p = T/t = .6875 / .3024998 = 2.272729

Radial stresses : (@ Attachment)

Membrane due to P (Ír1) = Kn(R1)(P/(T^2))
= 1.759371 (3.483746E-02) (2200 / (.6875 ^ 2))
= 285 psi.

Bending due to P (Ír2) = Kb(R2)(6(P)/(T^2))
= 1.470885 (3.141853E-02) (6 (2200) / (.6875
^ 2))
= 1291 psi.

Membrane due to M1 (Ír3) = Kn(R3)(M1/((T^2)(Sqr.(Rm(T)))))
= 1.759371 (.0517756) (13800 / ((.6875
^ 2) (Sqr. (71.65625 (.6875)))))
= 379 psi.

ding due to M1 (Ír4) = Kb(R4)(6(M1)/((T^2)(Sqr.(Rm(T))))
= 1.470885 (6.392491E-02) (6 (13800) / ((.6875
^ 2) (Sqr. (71.65625 (.6875))))
= 2347 psi.

Membrane due to M2 (Ír5) = Kn(R3)(M2/((T^2)(Sqr.(Rm(T)))))
= 1.759371 (.0517756) (0 / ((.6875 ^ 2) (Sqr. (
71.65625 (.6875)))))
= 0 psi.

Bending due to M2 (Ír6) = Kb(R4)(6(M2)/((T^2)(Sqr.(Rm(T))))
= 1.470885 (6.392491E-02) (6 (0) / ((.6875
^ 2) (Sqr. (71.65625 (.6875))))
= 0 psi.

Press. stress (Ír7) = Dp(Rm)(Iv)/(2(T))
= 10 (71.65625) (1) / (2 (.6875))
= 521 psi.

Stresses	Au	Al	Bu	Bl	Cu	Cl	Du	Dl
-σr 1	-285	-285	-285	-285	-285	-285	-285	-285
-σr 2	-1291	1291	-1291	1291	-1291	1291	-1291	1291
-σr 3	0	0	0	0	-379	-379	379	379
-σr 4	0	0	0	0	-2347	2347	2347	-2347
-σr 5	0	0	0	0	0	0	0	0
r 6	0	0	0	0	0	0	0	0
-σr	-1576	1006	-1576	1006	-4302	2974	1150	-962
-σp	521	521	521	521	521	521	521	521
-σrt	-1055	1527	-1055	1527	-3781	3495	1671	-441

****

metric parameters

U = .7657995
Tx = 17.26861
p = 2.272729

Tangential stresses : (@ Attachment)

Membrane due to P (σt1) = Kn(T1)(P/(T^2))
= 1.759371 (.1369678) (2200 / (.6875 ^ 2))
= 1122 psi.

Bending due to P (σt2) = Kb(T2)(6(P)/(T^2))
= 1.470885 (2.107777E-02) (6 (2200) / (.6875
^ 2))
= 866 psi.

Membrane due to M1 (σt3) = Kn(T3)(M1/((T^2)(Sqr.(Rm(T)))))
= 1.759371 (.1378333) (13800 / ((.6875
^ 2) (Sqr. (71.65625 (.6875)))))
= 1009 psi.

Bending due to M1 (σt4) = Kb(T4)(6(M1)/((T^2)(Sqr.(Rm(T))))
= 1.470885 (4.789065E-02) (6 (13800) / ((.6875
^ 2) (Sqr. (71.65625 (.6875))))
= 1758 psi.

Membrane due to M2 (σt5) = Kn(T3)(M2/((T^2)(Sqr.(Rm(T)))))
= 1.759371 (.1378333) (0 / ((.6875 ^ 2) (Sqr. (
71.65625 (.6875)))))
= 0 psi.

Bending due to M2 (σt6) = Kb(T4)(6(M2)/((T^2)(Sqr.(Rm(T))))
= 1.470885 (4.789065E-02) (6 (0) / ((.6875
^ 2) (Sqr. (71.65625 (.6875))))
= 0 psi.

Press. stress (σt7) = Dp(Rm)(Iv)/(2(T))
= 10 (71.65625) (1) / (2 (.6875))
= 521 psi.

Stresses	Au	Al	Bu	Bl	Cu	Cl	Du	Dl
-σt 1	-1122	-1122	-1122	-1122	-1122	-1122	-1122	-1122
-σt 2	-866	866	-866	866	-866	866	-866	866
-σt 3	0	0	0	0	-1009	-1009	1009	1009
-σt 4	0	0	0	0	-1758	1758	1758	-1758
-σt 5	0	0	0	0	0	0	0	0
-σt 6	0	0	0	0	0	0	0	0
-σt	-1988	-256	-1988	-256	-4755	493	779	-1005
-σp	521	521	521	521	521	521	521	521
-σtt	-1467	265	-1467	265	-4234	1014	1300	-484

Item no. : V-2214 S/o no. :

****

ear stresses : (@ Attachment)

Shear due to V1 ($\sigma s1$) = V1/(3.1416(Ro)(T))
= 0 / (3.1416 (5.375) (.6875))
= 0 psi.

Shear due to V2 ($\sigma s2$) = V2/(3.1416(Ro)(T))
= 0 / (3.1416 (5.375) (.6875))
= 0 psi.

Shear due to Mt ($\sigma s3$) = Mt/(3.1416(Ro^2)(2)(T))
= 0 / (3.1416 (5.375 ^ 2) (2) (.6875))
= 0 psi.

Stresses	Au	Al	Bu	Bl	Cu	Cl	Du	Dl
-σs 1	0	0	0	0	0	0	0	0
-σs 2	0	0	0	0	0	0	0	0
-σs 3	0	0	0	0	0	0	0	0
-σst	0	0	0	0	0	0	0	0

‡‡

Combined stress intensity : (@ Attachment)

---

hen σst = 0

σ (comb.) = The larger of :
1) σrt
2) σtt
3) σrt - σtt

- When σst <> 0

σ (comb.) = The larger of :
1) 0.5[σrt+σtt+Sqr.((σrt-σtt)^2+4(σst^2))]
2) 0.5[σrt+σtt-Sqr.((σrt-σtt)^2+4(σst^2))]
3) Sqr.((σct-σtt)^2+4(σst^2)))

Stresses	Au	Al	Bu	Bl	Cu	Cl	Du	Dl
-σs (comb.)	-1468	1527	-1468	1527	-4235	3495	1671	-485

‡‡

****

PRESSURE VESSEL DESIGN PRO CORP.
HOUSTON TX

****

--- COMPUTATION OF LOCAL STRESSES ---

CUSTOMER NAME : FMC

P.O. NO. : 96096.088

ITEM NO. : V-2214 S/O NO. :

DESIGNER NAME : CS HSU DATE : 08-16-1999

****

--- Stresses in Spherical head ---
(@ Pad outer edge)

Attachment Mk. : N7

M.A.W.P. : 10 psi.
Des. temp. : 328 deg. F

Vessel
---
ad rad. : 71.25 in. Head mean rad. : 71.46875 in. (corr.)
ad thk. : .375 in. (.3125 in. (corr.))
Material : SA 516 70
Allow. stress : 17500 psi.

Attachment

Shape : Cylindrical
OD : 16.75 in. Outs. rad. : 8.375 in.
Rad. @ nozz. interface : .375 in.

Loads & Moments

Radial load P : 2200 lb.
Shear load V1 : 0 lb.
Shear load V2 : 0 lb.
Moment M1 : 13800 in.-lb.
Moment M2 : 0 in.-lb.
Moment Mt : 0 in.-lb.

Stress coefficient factors

Kn : 1.454862 Kb : 1.250597 Iv : 1
R1 : 2.209713E-02 R2 : 1.626684E-02 R3 : 1.872819E-02 R4 : 2.188655E-02
T1 : .025 T2 : 5.727186E-03 T3 : .018 T4 : 6.718464E-03

Item no. : V-2214 S/o no. :

****

metric parameters

U = Ro/(Sqr.(Rm(T)))
= 8.375 / (Sqr. (71.46875 (.3125))) = 1.772155

Tx = rm/t = 6.72375 / 3.3025 = 2.035958

p = T/t = .3125 / 3.3025 = 9.462529E-02

Radial stresses : (@ Pad outer edge)

Membrane due to P (Ír1) = Kn(R1)(P/(T^2))
= 1.454862 (2.209713E-02) (2200 / (.3125 ^ 2))
= 724 psi.

Bending due to P (Ír2) = Kb(R2)(6(P)/(T^2))
= 1.250597 (1.626684E-02) (6 (2200) / (.3125
^ 2))
= 2750 psi.

Membrane due to M1 (Ír3) = Kn(R3)(M1/((T^2)(Sqr.(Rm(T)))))
= 1.454862 (1.872819E-02) (13800 / ((.3125
^ 2) (Sqr. (71.46875 (.3125)))))
= 815 psi.

ding due to M1 (Ír4) = Kb(R4)(6(M1)/((T^2)(Sqr.(Rm(T))))
= 1.250597 (2.188655E-02) (6 (13800) / ((.3125
^ 2) (Sqr. (71.46875 (.3125))))
= 4911 psi.

Membrane due to M2 (Ír5) = Kn(R3)(M2/((T^2)(Sqr.(Rm(T)))))
= 1.454862 (1.872819E-02) (0 / ((.3125
^ 2) (Sqr. (71.46875 (.3125)))))
= 0 psi.

Bending due to M2 (Ír6) = Kb(R4)(6(M2)/((T^2)(Sqr.(Rm(T))))
= 1.250597 (2.188655E-02) (6 (0) / ((.3125
^ 2) (Sqr. (71.46875 (.3125))))
= 0 psi.

Press. stress (Ír7) = Dp(Rm)(Iv)/(2(T))
= 10 (71.46875) (1) / (2 (.3125))
= 1144 psi.

Stresses	Au	Al	Bu	Bl	Cu	Cl	Du	Dl
-σr 1	-724	-724	-724	-724	-724	-724	-724	-724
-σr 2	-2750	2750	-2750	2750	-2750	2750	-2750	2750
-σr 3	0	0	0	0	-815	-815	815	815
-σr 4	0	0	0	0	-4911	4911	4911	-4911
-σr 5	0	0	0	0	0	0	0	0
-σr 6	0	0	0	0	0	0	0	0
-σr	-3474	2026	-3474	2026	-9200	6122	2252	-2070
-σp	1144	1144	1144	1144	1144	1144	1144	1144
-σrt	-2330	3170	-2330	3170	-8056	7266	3396	-926

Item no. : V-2214 S/o no. :

****

metric parameters

U = 1.772155
Tx = 2.035958
p = 9.462529E-02

Tangential stresses : (@ Pad outer edge)

Membrane due to P ($\sigma t1$) = Kn(T1)(P/(T^2))
= 1.454862 (.025) (2200 / (.3125 ^ 2))
= 819 psi.

Bending due to P ($\sigma t2$) = Kb(T2)(6(P)/(T^2))
= 1.250597 (5.727186E-03) (6 (2200) / (.3125
^ 2))
= 968 psi.

Membrane due to M1 ($\sigma t3$) = Kn(T3)(M1/((T^2)(Sqr.(Rm(T)))))
= 1.454862 (.018) (13800 / ((.3125 ^ 2) (Sqr. (
71.46875 (.3125)))))
= 783 psi.

Bending due to M1 ($\sigma t4$) = Kb(T4)(6(M1)/((T^2)(Sqr.(Rm(T))))
= 1.250597 (6.718464E-03) (6 (13800) / ((.3125
^ 2) (Sqr. (71.46875 (.3125))))
= 1507 psi.

Membrane due to M2 ($\sigma t5$) = Kn(T3)(M2/((T^2)(Sqr.(Rm(T)))))
= 1.454862 (.018) (0 / ((.3125 ^ 2) (Sqr. (
71.46875 (.3125)))))
= 0 psi.

Bending due to M2 ($\sigma t6$) = Kb(T4)(6(M2)/((T^2)(Sqr.(Rm(T))))
= 1.250597 (6.718464E-03) (6 (0) / ((.3125
^ 2) (Sqr. (71.46875 (.3125))))
= 0 psi.

Press. stress ($\sigma t7$) = Dp(Rm)(Iv)/(2(T))
= 10 (71.46875) (1) / (2 (.3125))
= 1144 psi.

Stresses	Au	Al	Bu	Bl	Cu	Cl	Du	Dl
-σt 1	-819	-819	-819	-819	-819	-819	-819	-819
-σt 2	-968	968	-968	968	-968	968	-968	968
-σt 3	0	0	0	0	-783	-783	783	783
-σt 4	0	0	0	0	-1507	1507	1507	-1507
-σt 5	0	0	0	0	0	0	0	0
-σt 6	0	0	0	0	0	0	0	0
-σt	-1787	149	-1787	149	-4077	873	503	-575
-σp	1144	1144	1144	1144	1144	1144	1144	1144
-σtt	-643	1293	-643	1293	-2933	2017	1647	569

:

****

Shear stresses : (@ Pad outer edge)

Shear due to V1 ($\sigma s1$) = V1/(3.1416(Ro)(T))
= 0 / (3.1416 (8.375) (.3125))
= 0 psi.

Shear due to V2 ($\sigma s2$) = V2/(3.1416(Ro)(T))
= 0 / (3.1416 (8.375) (.3125))
= 0 psi.

Shear due to Mt ($\sigma s3$) = Mt/(3.1416(Ro^2)(2)(T))
= 0 / (3.1416 (8.375 ^ 2) (2) (.3125))
= 0 psi.

Stresses	Au	Al	Bu	Bl	Cu	Cl	Du	Dl
-σs 1	0	0	0	0	0	0	0	0
-σs 2	0	0	0	0	0	0	0	0
-σs 3	0	0	0	0	0	0	0	0
-σst	0	0	0	0	0	0	0	0

‡‡

Combined stress intensity : (@ Pad outer edge)

- When σst = 0

σ (comb.) = The larger of :
1) σrt
2) σtt
3) σrt - σtt

- When σst <> 0

σ (comb.) = The larger of :
1) 0.5[σrt+σtt+Sqr.((σrt-σtt)^2+4(σst^2))]
2) 0.5[σrt+σtt-Sqr.((σrt-σtt)^2+4(σst^2))]
3) Sqr.((σct-σtt)^2+4(σst^2)))

Stresses	Au	Al	Bu	Bl	Cu	Cl	Du	Dl
-σs (comb.)	-2331	3170	-2331	3170	-8057	7266	3396	-1496

‡‡

Form 5007 (Rev. 9/95)

Raytheon Engineers & Constructors	GENERAL COMPUTATION SHEET	CALCULATION SET NO.			REV.	COMP. BY	CHK'D. BY
		PRELIM.	FINAL	VOID	ϕ	CSH DATE 8-13-99	DATE
PROJECT FMC		SHEET 93 OF				DATE	DATE
SUBJECT NO 2 FURNACE 2ND PASS SLURRY POT		J.O. 96096.033					

N2 EXTERNAL LOADS

§. DESIGN CONDITIONS:

ASSUME THE WORSE CASE THAT VESSEL/POT IS SUPPORTED BY INLET NOZZLE N2, 14", ONLY.
BASED ON THE ASSUMPTION MENSIONED ABOVE, THE STRESS ANALYSIS AT NOZZLE/HEAD JOINT WILL BE EVALUATED PER THE FOLLOWING LOADS:

DEAD WEIGHT (VESSEL & NOZZLES) : $W_D = 4090$ LBS
LIQUID CONTENT WEIGHT : $W_C = 8230$ LBS (S.G. = 1.13)
AGITATOR WEIGHT : $W_A = 700$ LBS
PUMP WEIGHT : $W_P = 800$ LBS
PIPING LOAD @ BTM, DRAIN NOZZLE : $W_{P1} = 2200$ LBS
TOTAL DEAD WT $(W) = W_D + W_C + W_A + W_P + W_{P1} = 16020$ LBS

SEISMIC LOAD : (BASED ON UBC CODE)

$$V = \frac{ZIC}{R_W} W$$

$$= \frac{(0.3)(1.0)(2.75)}{4}(13820)$$

$$= 2850 \text{ LB}$$

$Z = 0.3$ (ZONE 3)
$I = 1.0$
$C = 2.75$
$R_W = 4$
$W = W_D + W_C + W_A + W_P = 13820$ LBS

$$C = \frac{1.25S}{T^{2/3}}$$

$$= \frac{(1.25)(1.2)}{(0.117)^{2/3}}$$

$= 6.27 > 2.75$, USE 2.75

$$T = C_T H^{3/4}$$

$$= (0.035)(5.0)^{3/4}$$

$$= 0.117 \text{ SEC.}$$

$S = 1.2$

$$M = V \times ARM$$

$$= (2850)(2.5)$$

$$= 7125 \text{ FT-LB} = 85500 \text{ IN-LB}$$

LOCAL STRESS ANALYSIS (N2)

..... Pressure Vessel Design Pro Corp. .....
Houston Tx

- File name & Design pressures (# 1)

File name = V2214SUP
Cust. name = FMC
P.O. no. = 96096.088
Item no. = V-2214
S/o no. =
Des. name = CS HSU
Unit (E/M) = E

MAP (n&c) = 10
MAWP (des.) = 10
Des. temp. = 328

Attach. loc. (S/H) = H

- Vess. material & Attachment dimensions (# 2)

Vess. mat. = SA 516 70
Allow. stress (des.) = 17500
Vess. thk./Pad thk. = 0.375/0.375
Corr. allow. = 0.0625
Shell ID or Head rad. = 71.25

Attach. mark = N2
Attach. type (C/R) = C
Attach. ID = 13
Attach. OD/Pad OD = 14/20
Rad. @ nozz. interf. =
Hollow or Solid (1/2) = 1
Dim. Cl/Clp =
Dim. Cc/Ccp =

- Forces & Moments (Spherical) (# 3)

Radial load P = 16020
Shear load V1 = 0
Shear load V2 = 0

Moment M1 = 85500
Moment M2 = 0
Moment MT = 0

Factor Kn or 0 = 0
Factor Kb or 0 = 0
Factor Iv or 0 = 0

Output (S/P) = P

..... Pressure Vessel Design Pro Corp. .....
Houston Tx

Forces & Moments (Cylindrical) (# 4)

Radial load P	=
Shear load Vc	=
Shear load Vl	= 750
Moment Ml	= 22500
Moment Mc	=
Moment MT	=
Factor Kn or 0	= 0
Factor Kb or 0	= 0
Factor Iv or 0	= 0
Output (S/P)	= P

- (# 5)

****

PRESSURE VESSEL DESIGN PRO CORP.
HOUSTON TX

****

--- COMPUTATION OF LOCAL STRESSES ---

CUSTOMER NAME : FMC

P.O. NO. : 96096.088

ITEM NO. : V-2214 S/O NO. :

DESIGNER NAME : CS HSU DATE : 08-16-1999

****

--- Stresses in Spherical head ---
(@ Attachment)

Attachment Mk. : N2

M.A.W.P. : 10 psi.
Des. temp. : 328 deg. F

Vessel

Head rad. : 71.25 in. Head mean rad. : 71.65625 in. (corr.)
Head thk. : .75 in. (.6875 in. (corr.))
Material : SA 516 70
Allow. stress : 17500 psi.

Attachment

Shape : Cylindrical
OD : 14 in. Outs. rad. : 7 in.
Rad. @ nozz. interface : .375 in.

Loads & Moments

Radial load P : 16020 lb.
Shear load V1 : 0 lb.
Shear load V2 : 0 lb.
Moment M1 : 85500 in.-lb.
Moment M2 : 0 in.-lb.
Moment Mt : 0 in.-lb.

Stress coefficient factors

Kn : 1.759371	Kb : 1.470885	Iv : 1	
R1 : 2.491521E-02	R2 : 3.640958E-02	R3 : 3.401551E-02	R4 : 5.991575E-02
T1 : .102268	T2 : 1.425405E-02	T3 : .1028471	T4 : 2.766207E-02

****

metric parameters

U = Ro/(Sqr.(Rm(T)))
= 7 / (Sqr. (71.65625 (.6875))) = .9973203

Tx = rm/t = 6.78125 / .4375 = 15.5

p = T/t = .6875 / .4375 = 1.571429

Radial stresses : (@ Attachment)

Membrane due to P (Ír1) = Kn(R1)(P/(T^2))
= 1.759371 (2.491521E-02) (16020 / (.6875 ^ 2))
= 1486 psi.

Bending due to P (Ír2) = Kb(R2)(6(P)/(T^2))
= 1.470885 (3.640958E-02) (6 (16020) / (.6875
^ 2))
= 10891 psi.

Membrane due to M1 (Ír3) = Kn(R3)(M1/((T^2)(Sqr.(Rm(T)))))
= 1.759371 (3.401551E-02) (85500 / ((.6875
^ 2) (Sqr. (71.65625 (.6875)))))
= 1542 psi.

ding due to M1 (Ír4) = Kb(R4)(6(M1)/((T^2)(Sqr.(Rm(T))))
= 1.470885 (5.991575E-02) (6 (85500) / ((.6875
^ 2) (Sqr. (71.65625 (.6875))))
= 13628 psi.

Membrane due to M2 (Ír5) = Kn(R3)(M2/((T^2)(Sqr.(Rm(T)))))
= 1.759371 (3.401551E-02) (0 / ((.6875
^ 2) (Sqr. (71.65625 (.6875)))))
= 0 psi.

Bending due to M2 (Ír6) = Kb(R4)(6(M2)/((T^2)(Sqr.(Rm(T))))
= 1.470885 (5.991575E-02) (6 (0) / ((.6875
^ 2) (Sqr. (71.65625 (.6875))))
= 0 psi.

Press. stress (Ír7) = Dp(Rm)(Iv)/(2(T))
= 10 (71.65625) (1) / (2 (.6875))
= 521 psi.

Stresses	Au	Al	Bu	Bl	Cu	Cl	Du	Dl
-σr 1	-1486	-1486	-1486	-1486	-1486	-1486	-1486	-1486
-σr 2	-10891	10891	-10891	10891	-10891	10891	-10891	10891
-σr 3	0	0	0	0	-1542	-1542	1542	1542
-σr 4	0	0	0	0	-13628	13628	13628	-13628
-σr 5	0	0	0	0	0	0	0	0
-σr 6	0	0	0	0	0	0	0	0
-σr	-12377	9405	-12377	9405	-27547	21491	2793	-2681
-σp	521	521	521	521	521	521	521	521
-σrt	-11856	9926	-11856	9926	-27026	22012	3314	-2160

< 3S = 52500 PSI OK

Item no. : V-2214 S/o no. :

Page 98

****

metric parameters

U = .9973203
Tx = 15.5
p = 1.571429

Tangential stresses : (@ Attachment)

Membrane due to P ($\sigma t1$) = Kn(T1)(P/(T^2))
= 1.759371 (.102268) (16020 / (.6875 ^ 2))
= 6098 psi.

Bending due to P ($\sigma t2$) = Kb(T2)(6(P)/(T^2))
= 1.470885 (1.425405E-02) (6 (16020) / (.6875
^ 2))
= 4264 psi.

Membrane due to M1 ($\sigma t3$) = Kn(T3)(M1/((T^2)(Sqr.(Rm(T)))))
= 1.759371 (.1028471) (85500 / ((.6875
^ 2) (Sqr. (71.65625 (.6875)))))
= 4663 psi.

Bending due to M1 ($\sigma t4$) = Kb(T4)(6(M1)/((T^2)(Sqr.(Rm(T))))
= 1.470885 (2.766207E-02) (6 (85500) / ((.6875
^ 2) (Sqr. (71.65625 (.6875))))
= 6292 psi.

Membrane due to M2 ($\sigma t5$) = Kn(T3)(M2/((T^2)(Sqr.(Rm(T)))))
= 1.759371 (.1028471) (0 / ((.6875 ^ 2) (Sqr. (
71.65625 (.6875)))))
= 0 psi.

Bending due to M2 ($\sigma t6$) = Kb(T4)(6(M2)/((T^2)(Sqr.(Rm(T))))
= 1.470885 (2.766207E-02) (6 (0) / ((.6875
^ 2) (Sqr. (71.65625 (.6875))))
= 0 psi.

Press. stress ($\sigma t7$) = Dp(Rm)(Iv)/(2(T))
= 10 (71.65625) (1) / (2 (.6875))
= 521 psi.

Stresses	Au	Al	Bu	Bl	Cu	Cl	Du	Dl
-σt 1	-6098	-6098	-6098	-6098	-6098	-6098	-6098	-6098
-σt 2	-4264	4264	-4264	4264	-4264	4264	-4264	4264
-σt 3	0	0	0	0	-4663	-4663	4663	4663
-σt 4	0	0	0	0	-6292	6292	6292	-6292
-σt 5	0	0	0	0	0	0	0	0
-σt 6	0	0	0	0	0	0	0	0
-σt	-10362	-1834	-10362	-1834	-21317	-205	593	-3463
[illegible]	521	521	521	521	521	521	521	521
-σtt	-9841	-1313	-9841	-1313	-20796	316	1114	-2942

$< 3S = 52500$ PSI OK

Item no. : V-2214 S/o no. :

****

ar stresses : (@ Attachment)

Shear due to V1 (σs1) = V1/(3.1416(Ro)(T))
= 0 / (3.1416 (7) (.6875))
= 0 psi.

Shear due to V2 (σs2) = V2/(3.1416(Ro)(T))
= 0 / (3.1416 (7) (.6875))
= 0 psi.

Shear due to Mt (σs3) = Mt/(3.1416(Ro^2)(2)(T))
= 0 / (3.1416 (7 ^ 2) (2) (.6875))
= 0 psi.

Stresses	Au	Al	Bu	Bl	Cu	Cl	Du	Dl
-σs 1	0	0	0	0	0	0	0	0
-σs 2	0	0	0	0	0	0	0	0
-σs 3	0	0	0	0	0	0	0	0
-σst	0	0	0	0	0	0	0	0

‡‡

Combined stress intensity : (@ Attachment)
---

hen σst = 0

σ (comb.) = The larger of :
1) σrt
2) σtt
3) σrt - σtt

- When σst <> 0

σ (comb.) = The larger of :
1) 0.5[σrt+σtt+Sqr.((σrt-σtt)^2+4(σst^2))]
2) 0.5[σrt+σtt-Sqr.((σrt-σtt)^2+4(σst^2))]
3) Sqr.((σct-σtt)^2+4(σst^2)))

Stresses	Au	Al	Bu	Bl	Cu	Cl	Du	Dl
-σs (comb.)	-11857	11239	-11857	11239	-27027	22012	3314	-2943

‡‡

****

PRESSURE VESSEL DESIGN PRO CORP.
HOUSTON TX

****

--- COMPUTATION OF LOCAL STRESSES ---

CUSTOMER NAME : FMC

P.O. NO. : 96096.088

ITEM NO. : V-2214 S/O NO. :

DESIGNER NAME : CS HSU DATE : 08-16-1999

****

--- Stresses in Spherical head ---
(@ Pad outer edge)

Attachment Mk. : N2

M.A.W.P. : 10 psi.
Des. temp. : 328 deg. F

Vessel
---
ad rad. : 71.25 in. Head mean rad. : 71.46875 in. (corr.)
d thk. : .375 in. (.3125 in. (corr.))
Material : SA 516 70
Allow. stress : 17500 psi.

Attachment

Shape : Cylindrical
OD : 20 in. Outs. rad. : 10 in.
Rad. @ nozz. interface : .375 in.

Loads & Moments

Radial load P : 16020 lb.
Shear load V1 : 0 lb.
Shear load V2 : 0 lb.
Moment M1 : 85500 in.-lb.
Moment M2 : 0 in.-lb.
Moment Mt : 0 in.-lb.

Stress coefficient factors

Kn : 1.454862 Kb : 1.250597 Iv : 1
R1 : 1.595491E-02 R2 : 1.208639E-02 R3 : 1.133365E-02 R4 : 1.533949E-02
T1 : 2.105517E-02 T2 : 5.55182E-03 T3 : 1.339311E-02 T4 : 4.629686E-03

****

ometric parameters

U = Ro/(Sqr.(Rm(T)))
= 10 / (Sqr. (71.46875 (.3125))) = 2.116006

Tx = rm/t = 8.28125 / 3.4375 = 2.409091

p = T/t = .3125 / 3.4375 = 9.090909E-02

Radial stresses : (@ Pad outer edge)

Membrane due to P (Ír1) = Kn(R1)(P/(T^2))
= 1.454862 (1.595491E-02) (16020 / (.3125 ^ 2))
= 3808 psi.

Bending due to P (Ír2) = Kb(R2)(6(P)/(T^2))
= 1.250597 (1.208639E-02) (6 (16020) / (.3125
^ 2))
= 14877 psi.

Membrane due to M1 (Ír3) = Kn(R3)(M1/((T^2)(Sqr.(Rm(T)))))
= 1.454862 (1.133365E-02) (85500 / ((.3125
^ 2) (Sqr. (71.46875 (.3125)))))
= 3055 psi.

nding due to M1 (Ír4) = Kb(R4)(6(M1)/((T^2)(Sqr.(Rm(T))))
= 1.250597 (1.533949E-02) (6 (85500) / ((.3125
^ 2) (Sqr. (71.46875 (.3125))))
= 21324 psi.

Membrane due to M2 (Ír5) = Kn(R3)(M2/((T^2)(Sqr.(Rm(T)))))
= 1.454862 (1.133365E-02) (0 / ((.3125
^ 2) (Sqr. (71.46875 (.3125)))))
= 0 psi.

Bending due to M2 (Ír6) = Kb(R4)(6(M2)/((T^2)(Sqr.(Rm(T))))
= 1.250597 (1.533949E-02) (6 (0) / ((.3125
^ 2) (Sqr. (71.46875 (.3125))))
= 0 psi.

Press. stress (Ír7) = Dp(Rm)(Iv)/(2(T))
= 10 (71.46875) (1) / (2 (.3125))
= 1144 psi.

Stresses	Au	Al	Bu	Bl	Cu	Cl	Du	Dl
-σr 1	-3808	-3808	-3808	-3808	-3808	-3808	-3808	-3808
-σr 2	-14877	14877	-14877	14877	-14877	14877	-14877	14877
-σr 3	0	0	0	0	-3055	-3055	3055	3055
-σr 4	0	0	0	0	-21324	21324	21324	-21324
-σr 5	0	0	0	0	0	0	0	0
-σr 6	0	0	0	0	0	0	0	0
-σr	-18685	11069	-18685	11069	-43064	29338	5694	-7200
-σp	1144	1144	1144	1144	1144	1144	1144	1144
-σrt	-17541	12213	-17541	12213	-41920	30482	6838	-6056

< 3S = 52500 PSI OK

Item no. : V-2214 S/o no. :

****

ometric parameters

U = 2.116006
Tx = 2.409091
p = 9.090909E-02

Tangential stresses : (@ Pad outer edge)

Membrane due to P (σt1) = Kn(T1)(P/(T^2))
= 1.454862 (2.105517E-02) (16020 / (.3125 ^ 2))
= 5025 psi.

Bending due to P (σt2) = Kb(T2)(6(P)/(T^2))
= 1.250597 (5.55182E-03) (6 (16020) / (.3125
^ 2))
= 6834 psi.

Membrane due to M1 (σt3) = Kn(T3)(M1/((T^2)(Sqr.(Rm(T)))))
= 1.454862 (1.339311E-02) (85500 / ((.3125
^ 2) (Sqr. (71.46875 (.3125)))))
= 3610 psi.

Bending due to M1 (σt4) = Kb(T4)(6(M1)/((T^2)(Sqr.(Rm(T))))
= 1.250597 (4.629686E-03) (6 (85500) / ((.3125
^ 2) (Sqr. (71.46875 (.3125))))
= 6436 psi.

Membrane due to M2 (σt5) = Kn(T3)(M2/((T^2)(Sqr.(Rm(T)))))
= 1.454862 (1.339311E-02) (0 / ((.3125
^ 2) (Sqr. (71.46875 (.3125)))))
= 0 psi.

Bending due to M2 (σt6) = Kb(T4)(6(M2)/((T^2)(Sqr.(Rm(T))))
= 1.250597 (4.629686E-03) (6 (0) / ((.3125
^ 2) (Sqr. (71.46875 (.3125))))
= 0 psi.

Press. stress (σt7) = Dp(Rm)(Iv)/(2(T))
= 10 (71.46875) (1) / (2 (.3125))
= 1144 psi.

Stresses	Au	Al	Bu	Bl	Cu	Cl	Du	Dl
-σt 1	-5025	-5025	-5025	-5025	-5025	-5025	-5025	-5025
-σt 2	-6834	6834	-6834	6834	-6834	6834	-6834	6834
-σt 3	0	0	0	0	-3610	-3610	3610	3610
-σt 4	0	0	0	0	-6436	6436	6436	-6436
-σt 5	0	0	0	0	0	0	0	0
-σt 6	0	0	0	0	0	0	0	0
-σt	-11859	1809	-11859	1809	-21905	4635	-1813	-1017
-σp	1144	1144	1144	1144	1144	1144	1144	1144
-σtt	-10715	2953	-10715	2953	-20761	5779	-669	127

<3S = 52500 PSI OK

Item no. : V-2214 S/o no. :

****

ear stresses : (@ Pad outer edge)

Shear due to V1 ($\sigma s1$) = V1/(3.1416(Ro)(T))
= 0 / (3.1416 (10) (.3125))
= 0 psi.

Shear due to V2 ($\sigma s2$) = V2/(3.1416(Ro)(T))
= 0 / (3.1416 (10) (.3125))
= 0 psi.

Shear due to Mt ($\sigma s3$) = Mt/(3.1416(Ro^2)(2)(T))
= 0 / (3.1416 (10 ^ 2) (2) (.3125))
= 0 psi.

Stresses	Au	Al	Bu	Bl	Cu	Cl	Du	Dl
-σs 1	0	0	0	0	0	0	0	0
-σs 2	0	0	0	0	0	0	0	0
-σs 3	0	0	0	0	0	0	0	0
-σst	0	0	0	0	0	0	0	0

‡‡

Combined stress intensity : (@ Pad outer edge)

When σst = 0

σ (comb.) = The larger of :
1) σrt
2) σtt
3) σrt - σtt

- When σst <> 0

σ (comb.) = The larger of :
1) 0.5[σrt+σtt+Sqr.((σrt-σtt)^2+4(σst^2))]
2) 0.5[σrt+σtt-Sqr.((σrt-σtt)^2+4(σst^2))]
3) Sqr.((σct-σtt)^2+4(σst^2)))

Stresses	Au	Al	Bu	Bl	Cu	Cl	Du	Dl
-σs (comb.)	-17542	12213	-17542	12213	-41921	30482	7507	-6184

‡‡

ATTACHMENT 1

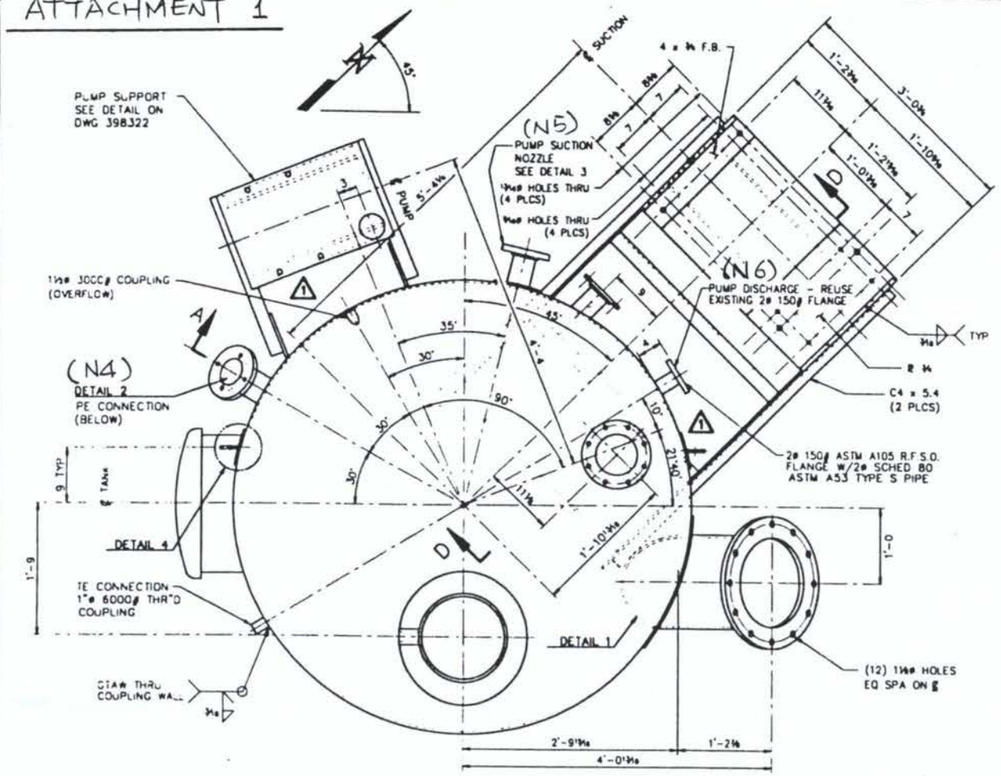

PLAN VIEW V-2214

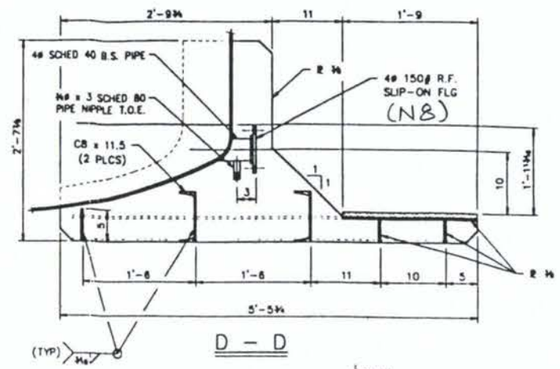

D – D

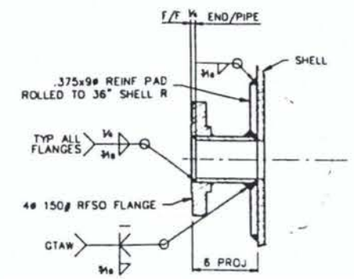

DETAIL 2
PE CONNECTION
NO SCALE

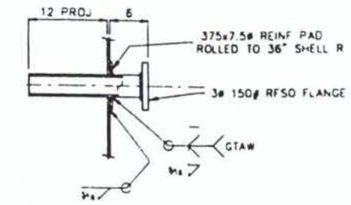

DETAIL 3
PUMP SUCTION

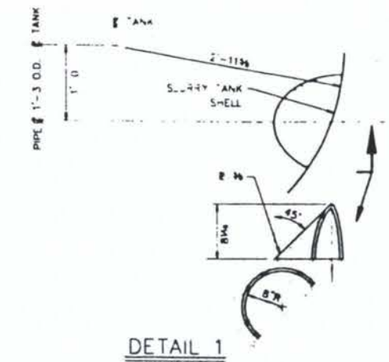

DETAIL 1
NO SCALE

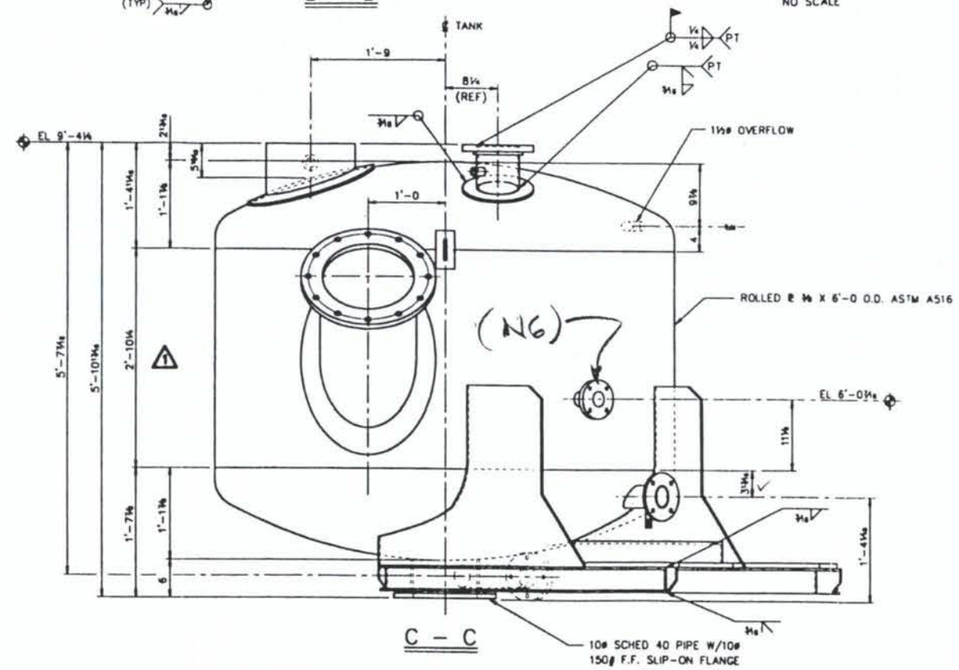

C – C

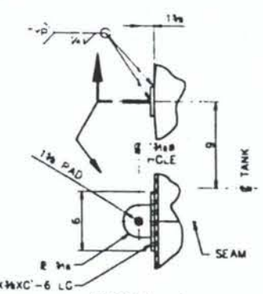

DETAIL 4
1½"=1'-0

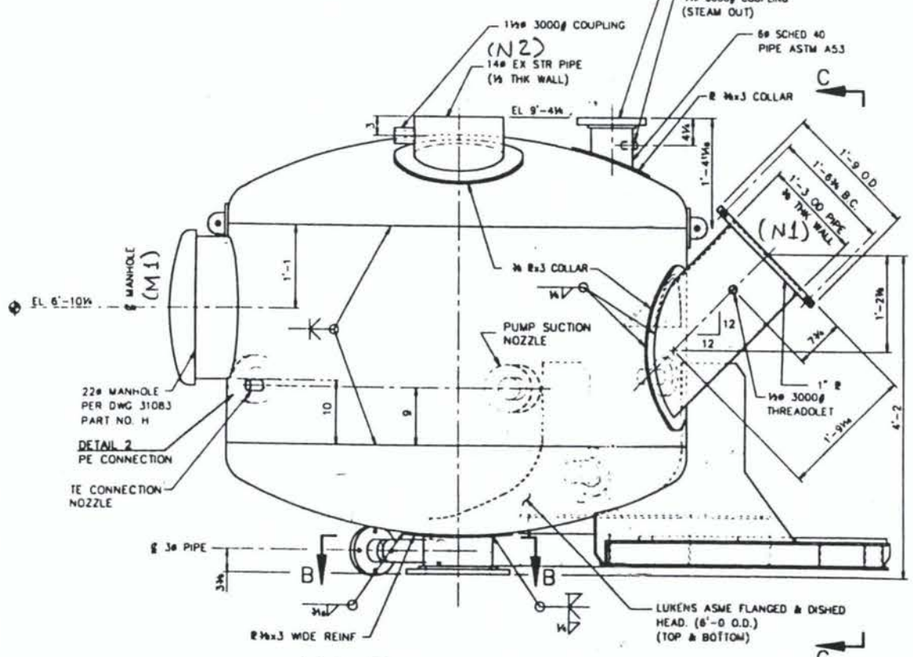

ELEVATION – SLURRY TANK

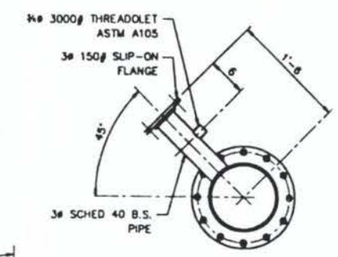

B – B

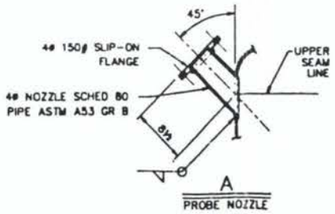

A
PROBE NOZZLE

NOTE:
SOME DESIGN INFORMATION ON THIS DRAWING IS BASED ON FURNACE No.3 OVERHAUL, AFE C95-02. DIFFERENCES BETWEEN THE No.3 FURNACE AND THIS DRAWING ARE CHANGES AS DIRECTED BY FMC FOR FURNACE No.2 OVERHAUL, C97-08.

NOTES:

1. STRUCTURAL STEEL SHAPES & PLATES SHALL CONFORM TO ASTM A36 U.N.
2. WELDING ELECTRODES SHALL BE E70XX PER AWS A5.1 OR A5.5.
3. STRUCTURAL STEEL SHALL BE SHOP PRIMED AND SHOP PAINTED WITH FIELD TOUCH-UP BY ERECTOR.
4. ALL WELDS FOR NEW NOZZLES SHALL BE MADE USING THE GTAW PROCESS.
5. ALL NEW NOZZLE/COUPLING OPENINGS SHALL BE DRILLED OR CUT TO MATCH THE BORE OF THE NOZZLE/COUPLING. IF FLAME CUT, CARE SHALL BE TAKEN TO INSURE CUT-OUTS MATCH THE NOZZLE/COUPLING I.D.
6. ITEMS NOTED NEW ARE FOR THE 98 OVERHAUL ALL OTHERS ARE EXISTING
7. ALL MATERIAL FABRICATION & INSPECTION SHALL CONFORM TO SPECIFICATION NO. ME-2025(C97-08)

NR	ZONE	REVISIONS	DATE	BY	APVD
1		REMOVED NOZZLES, FLANGES ON HEADS SHORTENED AND RELATED DIMENSIONS REVISED	08/10/98	DBA	
0		APPROVED FOR CONSTRUCTION	07/01/98	DBA	AJP
A		ISSUED FOR APPROVAL	04/13/98	DBA	AJP

REVISION APPROVAL RECORD — REV 1

DISCIPLINE	REVIEWED	DATE	DISCIPLINE	REVIEWED	DATE
CIVIL	—	—	PIPING		
STRUCTURAL	FJV	8-10-98	ELECTRICAL	GDB	8/10/98
HVAC	—	—	ARCHITECTURAL	—	—
MECHANICAL	[illegible]	8/10/98	INST & CONTROL	[illegible]	[illegible]
PROCESS	—	—	ENVIRONMENTAL	—	—
NUCLEAR	—	—	GEN. ARRANG.	—	—

Day Dixon Engineers & Constructors
A Construction of Design and DEAR

DRAWING STATUS

STATUS	REV	DATE	SDE	PEM
ISSUED FOR APPROVAL	A	04/13/98	WWS	DEW
APPROVED FOR CONSTRUCTION	0	07/01/98	WWS	DEW
REVISED & APPROVED FOR CONSTRUCTION	1	8/10/98	[illegible]	[illegible]

NOT APPROVED FOR CONSTRUCTION UNLESS SIGNED & DATED
DESTROY ALL PRINTS BEARING EARLIER DATE &/OR REV. NO.

FMC — PHOSPHORUS CHEMICAL DIVISION
FMC CORPORATION
POCATELLO, IDAHO

REFERENCE DRAWINGS	
300065	ARR 2nd PASS DRY BOTTOM
300105	SCREW CONVEYOR
300069	SLURRY VENT

C97-08 — SCALE 1"=1'-0

DETAILS
2ND PASS SLURRY TANK
NO. 2 FURNACE (WEST)
1998 OVERHAUL
PHOSPHORUS DEPT

DRAWN TCM 12/03/97 — APPROVED
CHECKED DBA 04/08/98 — APPROVED

THIS PRINT AND ALL INFORMATION THEREON IS OUR PROPERTY, IS CONFIDENTIAL AND MUST NOT BE MADE PUBLIC OR COPIED UNLESS AUTHORIZED BY US. IT IS SUBJECT TO RETURN ON DEMAND. PHOSPHORUS CHEMICAL DIVISION

DRAWING IDENTIFIER

PLANT	SITE	DRAWING NO	DISC	REV
P	FN	300143	M	1

PRINT DATE

ATTACHMENT 2

CLIENT: FMC
PROJECT:
SUBJECT: SLURRY POT ASSESMENT
TANK: V-2214, NO.2 FURNACE 2ND PASS SLURRY POT

8/16/99

NOZZLE SCHEDULE

MK	SIZE	SERVICE	NECK	REINFORCING PAD	LOCATION
N1	15" O.D.	AGITATOR	3/8"	3/8" t X 21" O.D.	SHELL
N2	14"	INLET	SCH XST (0.5")	3/8" t X 20" O.D.	TOP HEAD
N3	6"	FOG CONN.	SCH 40 (0.28")	3/8" t X 12 5/8" O.D.	TOP HEAD
N4	4"	PE CONN.	SCH 40 (0.237")	3/8" t X 9" O.D.	SHELL
N5	3"	PUMP SUCTION	SCH 40 (0.216")	3/8" t X 7 1/2" O.D.	SHELL
N6	2"	PUMP DISCHARGE	SCH 80 (0.218")	NO PAD	SHELL
N7	10"	DRAIN	SCH 40 (0.375")	NO PAD	BTM HEAD
N8	4"	OUTLET	SCH 40 (0.237")	NO PAD	BTM HEAD
M1	22"	MANWAY	SCH STD (0.375")	NO PAD	SHELL

Form 5007 (Rev. 9/95)

Raytheon Engineers & Constructors	GENERAL COMPUTATION SHEET	CALCULATION SET NO.			REV.	COMP. BY CSH	CHK'D. BY
		PRELIM.	FINAL	VOID	4	DATE 9-16-99	DATE
PROJECT FMC		SHEET 1 OF 2				DATE	DATE
SUBJECT		J.O. 96096.088					

§. DESIGN CRITERIA/REFERENCES:

ASME CODE SECT. VIII DIV. 1
WELDING RESEARCH COUNCIL (WRC) BULLETIN 107
PRESSURE VESSEL DESIGN HANDBOOK, 2ND EDITION

§. STRESS CONSIDERATION:

- PER ASME CODE UG-40, LIMITS OF REINFORCEMENT, MEASURED PARALLEL TO SHELL WALL, SHALL BE AT A DISTANCE, ON EACH SIDE OF OPENING, EQUAL TO THE GREATER OF THE FOLLOWING:
  1) THE DIA. d OF THE FINISHED OPENING : $d = 3.193''$
  2) $R_n + t + t_n = (3.193/2) + 0.375 + 0.216 = 2.1875''$
  ∴ FOR PUMP SUCTION, 3", THE LIMITS OF REINFORCEMENT = 3.193"

- PER PRESSURE VESSEL DESIGN HANDBOOK, PARA 7.5.3, PAGE 209, THE WIDTH OF REINFORCING PAD, UNLESS INTERMEDIATE WELDS ARE USED, SHALL NOT EXCEED
  1) $16t_p = (16)(0.375) = 6''$
  2) $16(t - C.A) = (16)(0.375 - 0.0625) = 5''$
  $6/2 = 3'' < 3.193''$ MENTIONED ABOVE, USE 3.193"

- PER ASME CODE UG-29, STIFFENING RINGS FOR CYLINDRICAL SHELL UNDER EXTERNAL PRESSURE, THE SHELL SECTION USED SHALL NOT BE GREATER THAN $1.1\sqrt{Dt_s} = (1.1)\sqrt{(72)(0.3125)} = 5.22''$

- RE &C/STEARNS-ROGER REFERENCE, ANALYSIS FOR EXTERNAL LOADS ON PRESSURE VESSELS SPECIFIED " THE SHELL STRESSES DUE TO LOCAL LOAD TEND TOWARD ZERO WITHIN A DISTANCE OF
  $2 \text{ TO } 3 \times \sqrt{RT} = 6.7'' \sim 10''$

Form 5007 (Rev. 9/95)

Raytheon Engineers & Constructors	GENERAL COMPUTATION SHEET	CALCULATION SET NO.			REV.	COMP. BY	CHK'D. BY
		PRELIM.	FINAL	VOID	Φ	CSH DATE 9-16-99	DATE
PROJECT		SHEET 2 OF 2				DATE	DATE
SUBJECT		J.O. 96096.088					

§. DISTANCE BETWEEN NOZZLE & PUMP SUPPORT GUSSETS:

ANGLE BETWEEN NOZZLE O.D. & GUSSET IS 26°

ARC LENGTH $= (72)(\pi)\left(\frac{26}{360}\right) = 16.34'' > 10 + 3.193 = 13.193''$

∴ STRESSES WILL NOT INFLUENCE EACH OTHER.

§. CONCLUSION:

DUE TO THE DISCUSSION ABOVE, PUMP SUCTION (3") AND PUMP SUPPORT GUSSETS SHOULD BE EVALUATED INDIVIDUALLY.
BASED ON VESSEL CALCULATION CRITERIA, D.P = 10 PSIG & CA = 1/16",
THE SHELL THICKNESS SHOULD BE 0.0966".
THE CORRODED THICKNESS MEASURED IS 0.213" > 0.0966"

- THE EXISTING CORRODED THICKNESS IS ADEQUATE FOR INTERNAL PRESSURE & NOZZLE REINFORCEMENT.
- THE DISTANCE BETWEEN MEASURED POINT AND PUMP SUPPORT GUSSET IS OUT OF LIMITS OF REINFORCEMENT, THE MINIMUM SHELL THICKNESS OF 0.220" IS NOT APPLICABLE.

§. DISCUSSION:

FOR THE SAFETY CONSIDERATION, RE&C RECOMMENDS THAT SHELL THICKNESS IN THE DISTANCE OF 10" FROM GUSSET SHOULD BE EVALUTED AGAIN.

FORM 5610 REV. 3/93

Raytheon
Engineers & Constructors
A Consolidation of Badger and UE&C

CALCULATION SUMMARY & CONTROL SHEET

CALCULATION SET NO.			
M-101			
PRELIM.	FINAL	VOID	REVISION
	✓		0

DISCIPLINE MECHANICAL
J.O. 9353.001

PROJECT TITLE FMC NOSAP

STRUCTURE OR SYSTEM _____ DESIGN CLASSIFICATION _____

SUBJECT SLURRY POT RECIRC. PUMP SUPPORT BRACKET

COMPLETED BY Myron R. Schultz DATE 1/26/95

CHECKED BY C. Thomas Lotko DATE 1/26/95

APPROVED BY C. Thomas Lotko DATE 1/26/95
SDE OR MGR OF STAFF GROUP

DISTRIBUTION _____

REASON FOR REVISION:

TOTAL NUMBER OF SHEETS IN THIS ISSUE 192

SHEETS REVISED, ADDED OR DELETED

PROBLEM STATEMENT:
DETERMINE IF SLURRY POT SHELLS ARE ADEQUATE TO SUPPORT CIRCULATION PUMP SUPPORTS.

SUMMARY CONCLUSIONS:
SLURRY POTS ARE ADEQUATE PROVIDED THAT SLURRY POT SHELL THICKNESSES DO CORRODE/ERODE BELOW THE FOLLOWING:

SLURRY POT	MIN. THK.
V-1213 (FURN. 1, 1ST PASS) W	.290"
V-1214 (FURN. 1, 2ND PASS) E	.290"
V-2213 (FURN. 2, 1ST PASS) E	.280"
V-2214 (FURN. 2, 2ND PASS) W	.290"
V-3213 (FURN. 3, 1ST PASS) W	.290"
V-3214 (FURN. 3, 2ND PASS) E	.290"
V-4213 (FURN. 4, 1ST PASS) E	.245"
V-4214 (FURN. 4, 2ND PASS) W	.220"

PROFESSIONAL ENGINEER REGISTERED C. Thomas Lotko 7667 1/26/95 STATE OF IDAHO C. THOMAS LOTKO II

A5353017/1

FORM 5610 REV. 3/93

CALCULATION SUMMARY & CONTROL SHEET

CALCULATION SET NO.			
101			
PRELIM.	FINAL	VOID	REVISION
	✓		0

DISCIPLINE MECHANICAL

J.O. 9353.001

PROJECT TITLE FMC NOSAP

DESIGN BASIS:

- LOADS PROVIDED IN STRUCTURAL CALCULATIONS
- 2 PSIG INTERNAL PRESSURE RESULTING FROM STATIC HEAD
- MATL. LISTED ON FMC DRAWINGS
- THICKNESS CHECK PROVIDED IN RACHEL FERGUSON MEMO, DATED 10/27/94 AND SUBSEQUENT UPDATE RCD. 11/8/94.

UNVERIFIED ASSUMPTIONS/OPEN ITEMS:

REFERENCES: (SPECIFICATIONS, DRAWINGS, CODES, CALCULATIONS, TEXTS, REPORTS, COMPUTER DATA, FSAR, ETC.)

DRAWING	32470, REV. 15	FOR	V-1213
	32793, REV. 12		V-1214
	392824, REV. 0		V-2213
	392824, REV. 0		V-2214
	394914, REV. 0		V-3213
	35329, REV. 7		V-3214
	395613, REV. 2		V-4213
	395614, REV. 1		V-4214

STRUCTURAL CALCULATIONS FOR SLURRY POT PUMP BRACKETS, DATED 9/16/94, CHK'D. 12/7/94, REV. 0

COMPUTER PROGRAM DISCLOSURE INFORMATION:

PROGRAM USED: (NAME)	REV. NO.	REV. DATE	PROGRAM TYPE	UE&C VERIFIED
				☐ YES ☐ NO

ANALYSIS DESCRIPTION	RUN NO.	RESULT

The attached computer output has been reviewed, the input data checked, and the results approved for release.

INPUT CRITERIA BY _____ DATE _____ CHECKED BY _____ DATE _____

RUN BY _____ DATE _____ APPROVED BY _____ DATE _____

A0393017.2

FORM 5007 REV. 4/91

Raytheon
Engineers & Constructors

GENERAL COMPUTATION SHEET

CALCULATION SET NO.			REV	COMP. BY	CHK'D BY
M-101			0	M. Schulze DATE 12/21/94	[illegible] DATE 1/25/95
PRELIM	FINAL	VOID			
SHEET	OF			DATE	DATE
J.O. 9353.001					

PROJECT FMC CORP.

SUBJECT SLURRY POT PUMP BRACKETS

FURNACE NO.	SLURRY POT	SHELL MAT'L.	PUMP BRACKET TYPE (NOTE 1)	SLURRY POT O. DIA.	SLURRY POT WALL THK. (NEW)	LIQUID HEAD (NOTE 2)	CALCULATED MINIMUM WALL THK. TO BE ALLOWED
1	EAST	SA36	1	72"	3/8"	USE 2 PSI	0.290" NOTE 3
1	WEST	↓	1	↓	↓	↓	0.290" NOTE 3
2	EAST	↓	2	↓	↓	↓	0.280" SEE P.89 *
2	WEST	↓	1	↓	↓	↓	0.290" NOTE 3
3	EAST	↓	1	↓	↓	↓	0.290" NOTE 3
3	WEST	↓	1	↓	↓	↓	0.290" NOTE 3
4	EAST	SA516-70	2	↓	↓	↓	0.245" SEE P.122 *
4	WEST	SA516-70	1	↓	↓	↓	0.220" SEE P.155

NOTES:

1. SEE SHEETS 3 & 4.
2. 4 FT. LIQUID × 1.13 S.G / 2.31 FT/PSI = 1.96 PSI USE 2 PSI
3. BASED ON CALCULATIONS FOR FURNACE #1-EAST SLURRY POT, WHICH HAD THE MOST SEVERE LOAD CONDITION. SEE P.41.

FORM 5007 REV. 4/91

United Engineers & Constructors
A Raytheon Company

GENERAL COMPUTATION SHEET

CALCULATION SET NO			REV	COMP. BY	CHK'D BY
M-101			0	M. SCHULTZ DATE 12/16/94	DATE 1/25/95
PRELIM	FINAL	VOID			
SHEET OF				DATE	DATE
J.O. 9353.001					

PROJECT FMC CORP

SUBJECT SLURRY POT PUMP BRACKETS

FURNACE NO.	SLURRY TANK	JOINT NO.	LOAD NO.	LOAD TYPE	LOAD COMPONENTS P (K)	Vc (K)	VL (K)	Mc (IN-K)	ML (IN-K)	MT (IN-K)	
1	EAST	1	6	DL+LL	0	0	.88	0	-19.4	4.9	*
		1	8	DL+SEIS.	.16	.22	1.02	1.34	-22.5	5.68	*
		6	7	DL+SEIS.	.14	-.22	.76	-1.23	-16.96	-6.68	*
	WEST	6	6	DL+LL	0	0	.88	0	-15.77	-10.40	
		6	7	DL+SEIS.	.08	-.17	1.02	-.67	-18.36	-12.06	
2	EAST	14	6	DL+LL	.01	-.02	1.02	-.02	-21.66	9.22	⊙
		14	7	DL+SEIS.	.25	.32	.40	-.03	-38.80	21.70	⊙
	WEST	6	6	DL+LL	0	0	.88	0	-14.58	-4.95	
		6	7	DL+SEIS	.11	-.21	1.02	-.87	-16.96	-5.75	
3	EAST	1	6	DL+LL	0	0	.88	0	-15.22	10.03	
		1	7	DL+SEIS.	.08	.17	1.02	.71	-17.70	11.67	
	WEST	1	7	DL+SEIS.	.10	.18	.75	.73	-13.53	7.35	
		6	6	DL+LL	0	0	.88	0	-13.97	-1.88	
		6	8	DL+SEIS.	.14	-.23	1.02	-1.03	-16.24	-2.19	
4	EAST	14	6	DL+LL	.01	-.02	1.02	-.02	-21.91	8.60	**
		14	7	DL+SEIS.	.25	.31	.40	-.03	-39.41	20.61	**
	WEST	1	7	DL+SEIS.	.13	.21	.75	1.07	-15.54	6.66	
		6	6	DL+LL	0	0	.88	0	-17.60	-3.91	**
		6	8	DL+SEIS.	.16	-.22	1.02	-1.21	-20.46	-4.54	**

THESE LOAD CONDITIONS ARE JUDGED TO BE THE MOST SEVERE, FOR EACH POT.

SLURRY POTS FOR FURNACES #1 EAST #1 WEST, #2 WEST, #3 EAST, & #3 WEST ARE ALL A36 MATERIAL, WITH SIMILAR PUMP BRACKET TYPE 1. LOADS MARKED (*) FOR SLURRY POT #1 EAST ARE JUDGED THE HIGHEST FOR ALL THESE SLURRY POTS, & THE MINIMUM THK. FOR ALL THESE POTS WILL BE BASED ON THESE MAXIMUM LOADS.

SLURRY POT FOR FURNACE #2 EAST IS A36 MATERIAL, BUT HAS PUMP BRACKET TYPE 2. MINIMUM THK. FOR THIS POT WILL BE CALCULATED SEPARATELY

SLURRY POT FOR FURNACE #4 EAST IS A516-70 MATERIAL & HAS PUMP BRACKET TYPE 2. MINIMUM THK. FOR THIS POT WIL BE CALCULATED SEPARATELY.

SLURRY POT FOR FURNACE #4 WEST IS A516-70 MATERIAL & HAS PUMP BRACKET TYPE 1. MINIMUM THK. FOR THIS POT WILL BE CALCULATED SEPARATELY.

FORM 5007 REV. 4/91

United Engineers & Constructors
A Raytheon Company

GENERAL COMPUTATION SHEET

CALCULATION SET NO.			REV	COMP. BY	CHK'D BY
M-101			0	M. Schulte DATE 12/16/94	C.T. DATE 1/25/95
PRELIM.	FINAL	VOID			
SHEET	OF			DATE	DATE
J.O. 9353.001					

PROJECT FMC CORP.

SUBJECT SLURRY POT PUMP BRACKETS

PUMP BRACKET TYPE I

FURNACE #1 EAST & WEST POT
FURNACE #2 WEST POT
FURNACE #3 EAST & WEST POT
FURNACE #4 WEST POT

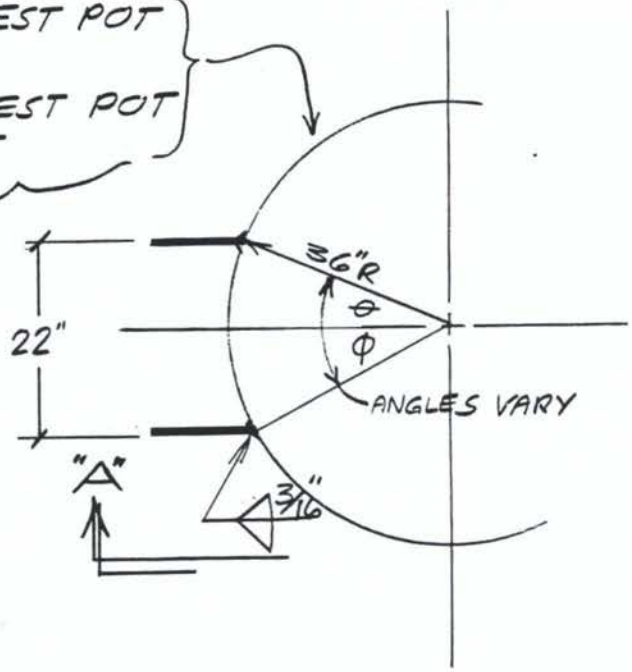

PLAN

ASSUME THE GUSSET IS SUPPORTED ON 15½" LENGTH OF SHELL, ONLY. (CONSERVATIVE SINCE GUSSET IS ALSO WELDED TO HEAD.)

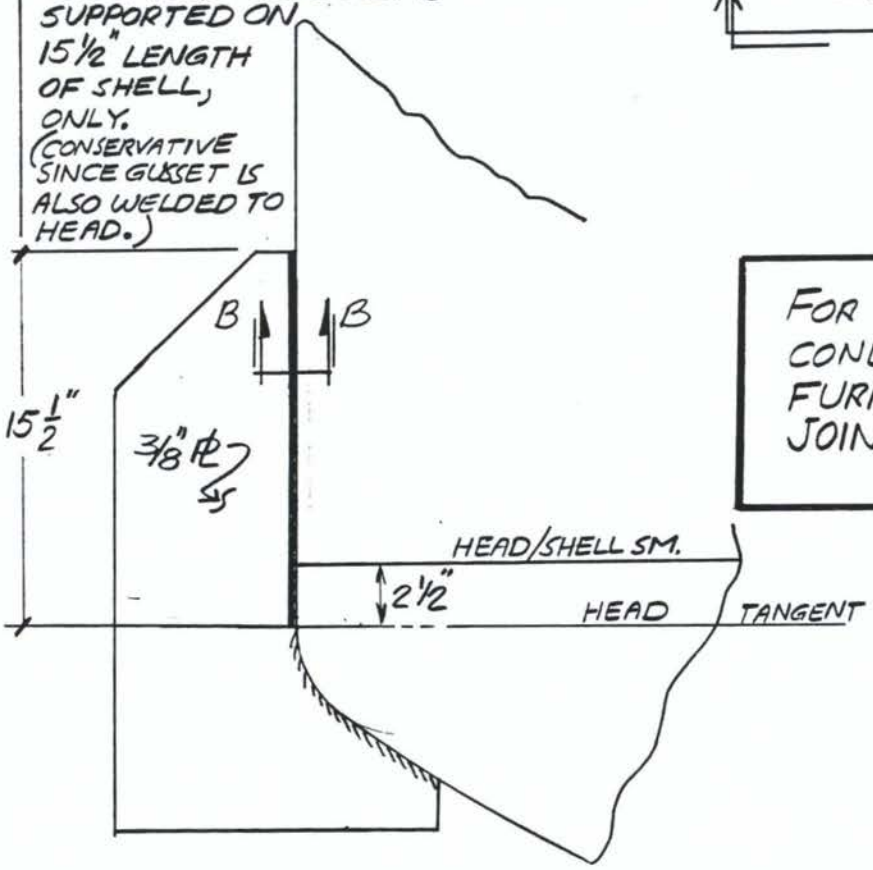

ELEVATION "A-A"

FOR MOST SEVERE LOAD CONDITION - USE LOAD ON FURNACE #1 - EAST POT JOINT #1 - LOAD #8

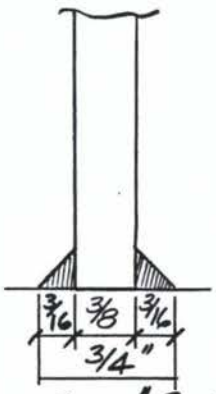

SECT. "B-B"

FORM 5007 REV. 4/91

United Engineers & Constructors
A Raytheon Company

GENERAL COMPUTATION SHEET

CALCULATION SET NO.			REV	COMP. BY	CHK'D BY
M-101			0	M. SCHULTZ DATE 12/16/94	C.T. DATE 1/25/95
PRELIM	FINAL	VOID			
SHEET	OF			DATE	DATE
J.O. 9353.001					

PROJECT FMC CORP

SUBJECT SLURRY POT PUMP BRACKETS

PUMP BRACKET TYPE 2

FURNACE #2 EAST POT
FURNACE #4 EAST POT

ASSUME THIS IS THE GUSSET LENGTH AT THE SHELL ATTACHMENT.

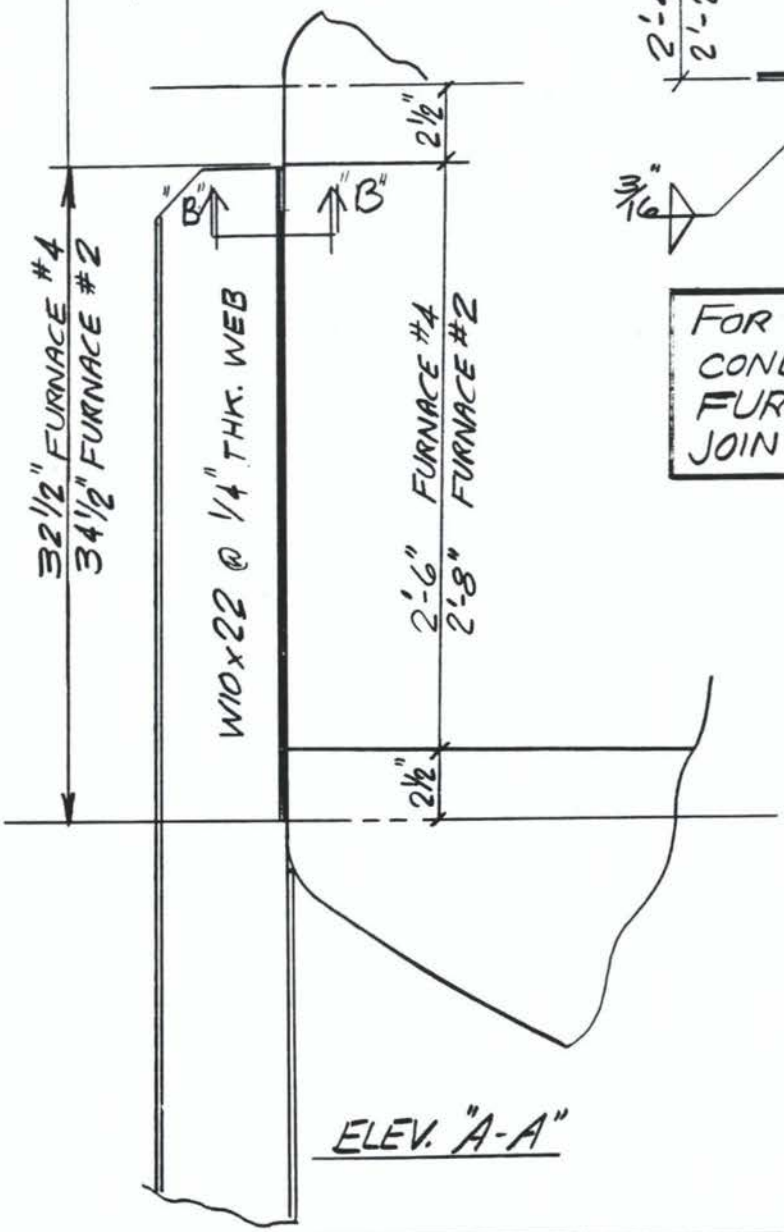

ELEV. "A-A"

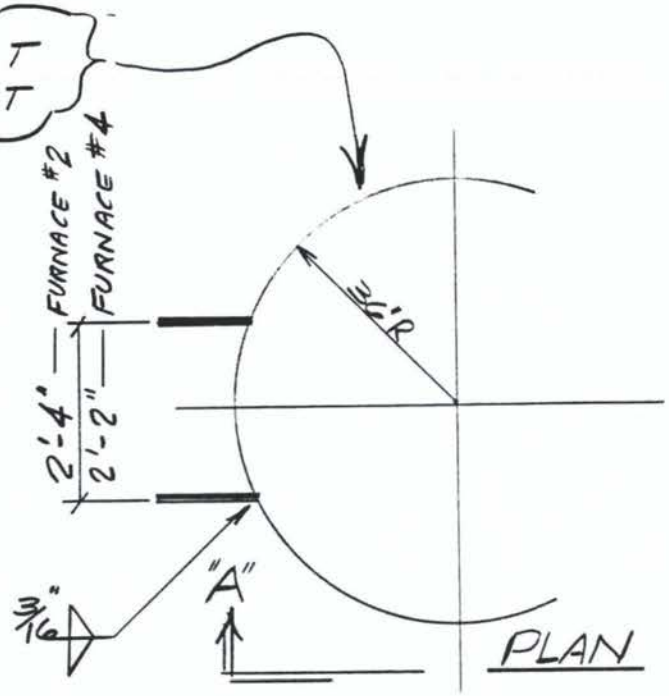

PLAN

FOR MOST SEVERE LOAD CONDITION - USE LOADS ON FURNACE #2 - EAST POT JOINT #14 - LOAD #6 & #7

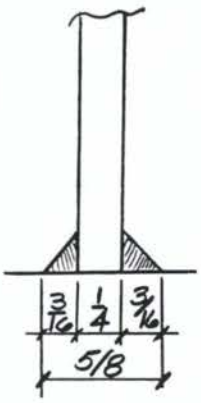

SECT. "B-B"

FORM 5007 REV. 4/91

Raytheon
Engineers & Constructors

GENERAL COMPUTATION SHEET

CALCULATION SET NO			REV	COMP BY	CHK'D BY
M-101			0	M. Schult	[illegible]
PRELIM	FINAL	VOID		DATE 12/14/94	DATE 1/25/95
SHEET	OF			DATE	DATE
J.O. 9353.001					

PROJECT FMC CORP.

SUBJECT SLURRY POT PUMP BRACKETS

THE FOLLOWING PAGES SHOW THE TRANSFORMATION FROM STRUCTURAL CALCULATED LOADS TO MECHANICAL LOADS APPLIED TO THE EQUIPMENT AT THE BRACKET ATTACHMENT.

THE LOAD TRANSFORMATION IS REQUIRED IN ORDER TO USE PRESSURE VESSEL DESIGN PRO CORP. PC PROGRAM FOR APPLICATION & ANALYSIS OF LOADS IN ACCORDANCE WITH WELDING RESEARCH COUNCIL BULLETIN WRC-107.

FORM 5007 REV. 4/91

United Engineers & Constructors
A Raytheon Company

GENERAL COMPUTATION SHEET

CALCULATION SET NO.			REV.	COMP. BY	CHK'D BY
M-101			0	M. SCHULTZ	C.T. [illegible]
PRELIM.	FINAL	VOID		DATE 12/14/94	DATE 1/25/95
SHEET _ OF				DATE	DATE
J.O. 9353.001					

PROJECT FMC CORP.

SUBJECT SLURRY POT PUMP BRACKETS

FURNACE #1- EAST POT

FURNACE #1-EAST

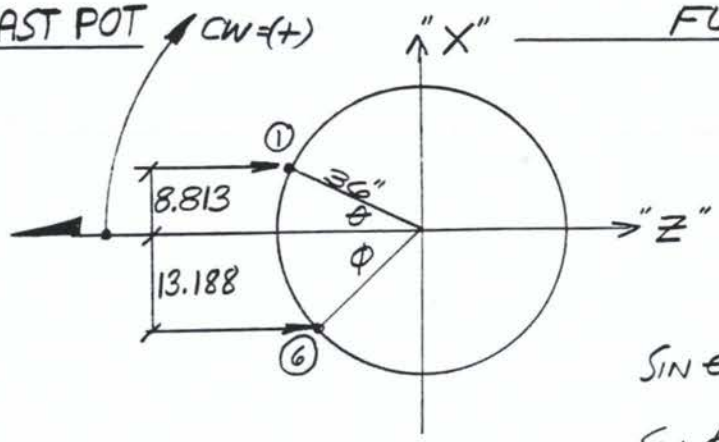

$$\sin\theta = \frac{8.813''}{36''} \qquad \theta = 14.17^\circ$$

$$\sin\phi = \frac{13.188''}{36''} \qquad \phi = 21.49^\circ$$

$$\phi' = 360^\circ - 21.49^\circ = 338.51^\circ$$

SLURRY POT PUMP BRACKET (FMCP-F1E)
* FURNACE NO 1 - EAST POT

SUPPORT REACTIONS -UNIT KIPS INCH STRUCTURE TYPE = SPACE

JOINT	LOAD	FORCE-X	FORCE-Y	FORCE-Z	MOM-X	MOM-Y	MOM Z
1	1	0.00	0.78	0.00	17.71	0.00	0.00
	2	0.00	0.10	0.00	2.30	0.00	0.00
	3	0.00	-0.16	0.00	-3.54	0.00	0.00
	4	-0.23	0.42	-0.28	9.74	1.79	0.01
	5	0.00	0.00	-0.27	-6.19	0.00	0.00
	6 (DL+LL)	0.00	0.88	0.00	20.01	0.00	0.00
	7 (DL+SEIS)	0.17	0.38	0.21	8.63	-1.34	-0.01
	8	-0.17	1.02	-0.21	23.25	1.34	0.01
	9	0.00	0.70	0.20	20.58	0.00	0.00
6	1	0.00	0.49	0.00	11.60	0.00	0.00
	2	0.00	0.10	0.00	2.45	0.00	0.00
	3	0.00	-0.10	0.00	-2.32	0.00	0.00
	4	-0.20	-0.42	0.28	-10.38	1.64	0.01
	5	0.00	0.00	-0.16	-3.66	0.00	0.00
	6 (DL+LL)	0.00	0.59	0.00	14.05	0.00	0.00
	7 (DL+SEIS)	0.15	0.76	-0.21	18.23	-1.23	0.00
	8	-0.15	0.12	0.21	2.66	1.23	0.01
	9	0.00	0.44	0.12	13.19	0.00	0.00

********** END OF LATEST ANALYSIS RESULT **********

70. LOAD LIST 1 TO 5
71. PRINT JOINT DISPLACEMENTS LIST 3 4

STEARNS-ROGER DIV.¶ TRANSFORMATION OF COORDINATES PROGRAM

DATE 12-15-1994
TIME 14:09:59

FURNACE #1 - EAST POT
JOINT #1 - LOAD #6
(DL+LL)

VERTICAL VESSEL

NOZZLE ORIENTATION = 14.17 DEG

PIPING LOADS :

FX0 =	0.00 LBS	MX0 =	1667.50 FT-LBS
FY0 =	880.00 LBS	MY0 =	0.00 FT-LBS
FZ0 =	0.00 LBS	MZ0 =	0.00 FT-LBS

TRANSLATION OF ROTATED LOADS = 0.00 IN

SECONDARY ROTATION AROUND HORIZONTAL = 0.00 DEG

ROTATED AND/OR TRANSLATED LOADS :

P (Z) =	0.00 KIPS	MC(Y) =	0.00 IN-KIPS
VC(X) =	0.00 KIPS	ML(X) =	-19.40 IN-KIPS
VL(Y) =	0.88 KIPS	MT(Z) =	4.90 IN-KIPS

STEARNS-ROGER DIV.¶ TRANSFORMATION OF COORDINATES PROGRAM

DATE 12-14-1994
TIME 08:58:23

VERTICAL VESSEL

FURNACE #1 - EAST POT - 2ND PASS
JOINT #6, LOAD #7
(DL + SEISMIC)

NOZZLE ORIENTATION = 338.51 DEG

PIPING LOADS :

FX0 =	150.00 LBS	MX0 =	1519.16 FT-LBS
FY0 =	760.00 LBS	MY0 =	-102.50 FT-LBS
FZ0 =	-210.00 LBS	MZ0 =	0.00 FT-LBS

TRANSLATION OF ROTATED LOADS = 0.00 IN

SECONDARY ROTATION AROUND HORIZONTAL = 0.00 DEG

ROTATED AND/OR TRANSLATED LOADS :

P (Z) =	0.14 KIPS	MC(Y) =	-1.23 IN-KIPS
VC(X) =	-0.22 KIPS	ML(X) =	-16.96 IN-KIPS
VL(Y) =	0.76 KIPS	MT(Z) =	-6.68 IN-KIPS

STEARNS-ROGER DIV.¶ TRANSFORMATION OF COORDINATES PROGRAM

DATE 12-14-1994
TIME 08:52:01

VERTICAL VESSEL

FURNACE #1- EAST POT - 2ND PASS
JOINT #1, LOAD #8
(DL+SEISMIC)

NOZZLE ORIENTATION = 14.17 DEG

PIPING LOADS :

FXO =	-170.00 LBS	MXO =	1937.50 FT-LBS	23,250/12
FYO =	1020.00 LBS	MYO =	111.67 FT-LBS	1,340/12
FZO =	-210.00 LBS	MZO =	0.83 FT-LBS	10/12

TRANSLATION OF ROTATED LOADS = 0.00 IN

SECONDARY ROTATION AROUND HORIZONTAL = 0.00 DEG

ROTATED AND/OR TRANSLATED LOADS :

P (Z) =	0.16 KIPS	MC(Y) =	1.34	IN-KIPS
VC(X) =	0.22 KIPS	ML(X) =	-22.55	IN-KIPS
VL(Y) =	1.02 KIPS	MT(Z) =	5.68	IN-KIPS

FORM 5007 REV. 4/91

United Engineers & Constructors
A Raytheon Company

GENERAL COMPUTATION SHEET

CALCULATION SET NO.			REV	COMP. BY	CHK'D BY
M-101			0	M. SCHULTZ	C. T. [illegible]
PRELIM.	FINAL	VOID		DATE 12/14/94	DATE 1/25/95
SHEET	OF			DATE	DATE
J.O. 9353.001					

PROJECT FMC CORP.

SUBJECT SLURRY POT PUMP BRACKETS

FURNACE #1 - WEST POT

FURNACE #1 - WEST

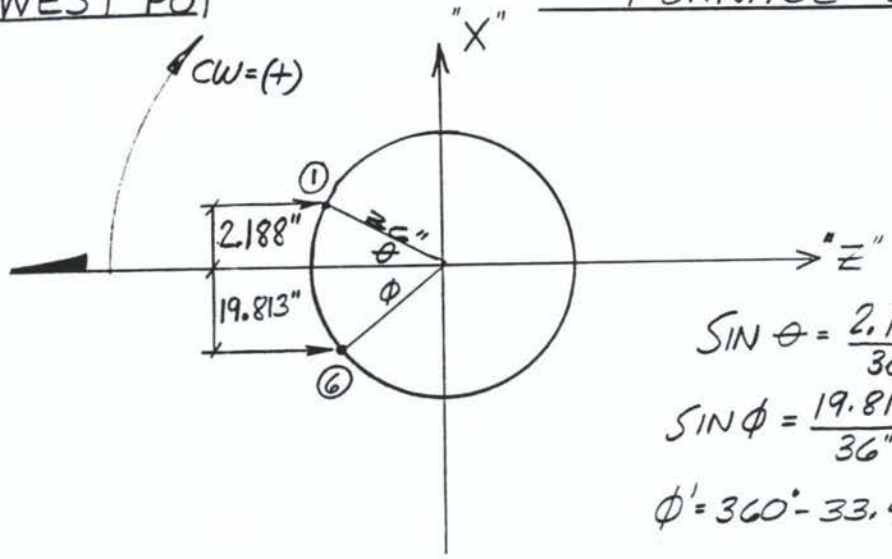

$$\sin\theta = \frac{2.188''}{36} \quad \theta = 3.48^\circ$$

$$\sin\phi = \frac{19.813''}{36''} \quad \phi = 33.4^\circ$$

$$\phi' = 360^\circ - 33.4^\circ = 326.6^\circ$$

SLURRY POT PUMP BRACKET (FMCP-F1W)
* FURNACE NO 1 - WEST POT

SUPPORT REACTIONS -UNIT KIPS INCH STRUCTURE TYPE = SPACE

JOINT	LOAD	FORCE-X	FORCE-Y	FORCE-Z	MOM-X	MOM-Y	MOM Z
1	1	0.00	0.48	0.00	7.41	0.00	-0.01
	2	0.00	0.10	0.00	1.58	0.00	0.00
	3	0.00	-0.10	0.00	-1.48	0.00	0.00
	4	-0.30	0.43	-0.22	6.68	1.40	0.01
	5	0.00	0.00	-0.16	-3.66	0.00	0.00
	6	0.00	0.58	0.00	8.99	0.00	-0.01
	7	0.22	0.11	0.16	1.66	-1.05	-0.01
	8	0.00	0.43	0.12	9.42	0.00	-0.01
6	1	0.00	0.78	0.00	16.72	0.00	0.00
	2	0.00	0.10	0.00	2.17	0.00	0.00
	3	0.00	-0.16	0.00	-3.34	0.00	0.00
	4	-0.13	-0.43	0.22	-9.23	0.90	0.00
	5	0.00	0.00	-0.26	-6.18	0.00	0.00
	6 (DL+LL)	0.00	0.88	0.00	18.89	0.00	0.00
	7 (DL+SEIS)	0.10	1.02	-0.16	21.97	-0.67	-0.01
	8	0.00	0.70	0.20	19.68	0.00	-0.01

********** END OF LATEST ANALYSIS RESULT **********

68. LOAD LIST 1 TO 5
69. PRINT JOINT DISPLACEMENTS LIST 3 4

STEARNS-ROGER DIV.¶ TRANSFORMATION OF COORDINATES PROGRAM

DATE 01-10-1995
TIME 08:22:39

FURNACE #1 - WEST POT
JOINT #6 - LOAD #6
(DL+LL)

VERTICAL VESSEL

STRESS WILL NOT BE CALCULATED FOR THIS CASE.
LOADS ARE LOW.

NOZZLE ORIENTATION = 326.60 DEG

PIPING LOADS :

FXO =	0.00 LBS	MXO =	1574.17 FT-LBS
FYO =	880.00 LBS	MYO =	0.00 FT-LBS
FZO =	0.00 LBS	MZO =	0.00 FT-LBS

TRANSLATION OF ROTATED LOADS = 0.00 IN

SECONDARY ROTATION AROUND HORIZONTAL = 0.00 DEG

ROTATED AND/OR TRANSLATED LOADS :

P (Z) =	0.00 KIPS	MC(Y) =	0.00 IN-KIPS
VC(X) =	0.00 KIPS	ML(X) =	-15.77 IN-KIPS
VL(Y) =	0.88 KIPS	MT(Z) =	-10.40 IN-KIPS

STEARNS-ROGER DIV.¶ TRANSFORMATION OF COORDINATES PROGRAM

DATE 12-14-1994
TIME 11:54:27

VERTICAL VESSEL

FURNACE #1 - WEST POT - 1ST PASS
JOINT #6 - LOAD #7
(DL+SEISMIC)

NOZZLE ORIENTATION = 326.68 DEG

PIPING LOADS :

FX0 =	100.00 LBS	MX0 =	1830.83 FT-LBS
FY0 =	1020.00 LBS	MY0 =	-55.83 FT-LBS
FZ0 =	-160.00 LBS	MZ0 =	-0.83 FT-LBS

TRANSLATION OF ROTATED LOADS = 0.00 IN

SECONDARY ROTATION AROUND HORIZONTAL = 0.00 DEG

ROTATED AND/OR TRANSLATED LOADS :

P (Z) =	0.08 KIPS	MC(Y) =	-0.67 IN-KIPS
VC(X) =	-0.17 KIPS	ML(X) =	-18.36 IN-KIPS
VL(Y) =	1.02 KIPS	MT(Z) =	-12.06 IN-KIPS

FORM 5007 REV. 4/91

United Engineers & Constructors
A Raytheon Company

GENERAL COMPUTATION SHEET

CALCULATION SET NO.			REV.	COMP. BY	CHK'D BY
M-101			0	M. SCHULTZ DATE 12/15/94	C.T. [illegible] DATE 11/25/95
PRELIM.	FINAL	VOID			
SHEET	OF			DATE	DATE
J.O. 9353.001					

PROJECT FMC, CORP.

SUBJECT SLURRY POT PUMP BRACKETS

FURNACE #2 - EAST POT

FURNACE #2-EAST

$\sin\theta = \frac{14'}{36''}$ $\theta = 22.89°$

$\alpha_{(13)} = 180° - 22.89° = 157.11°$

$\alpha_{(14)} = 180° + 22.89° = 202.89°$

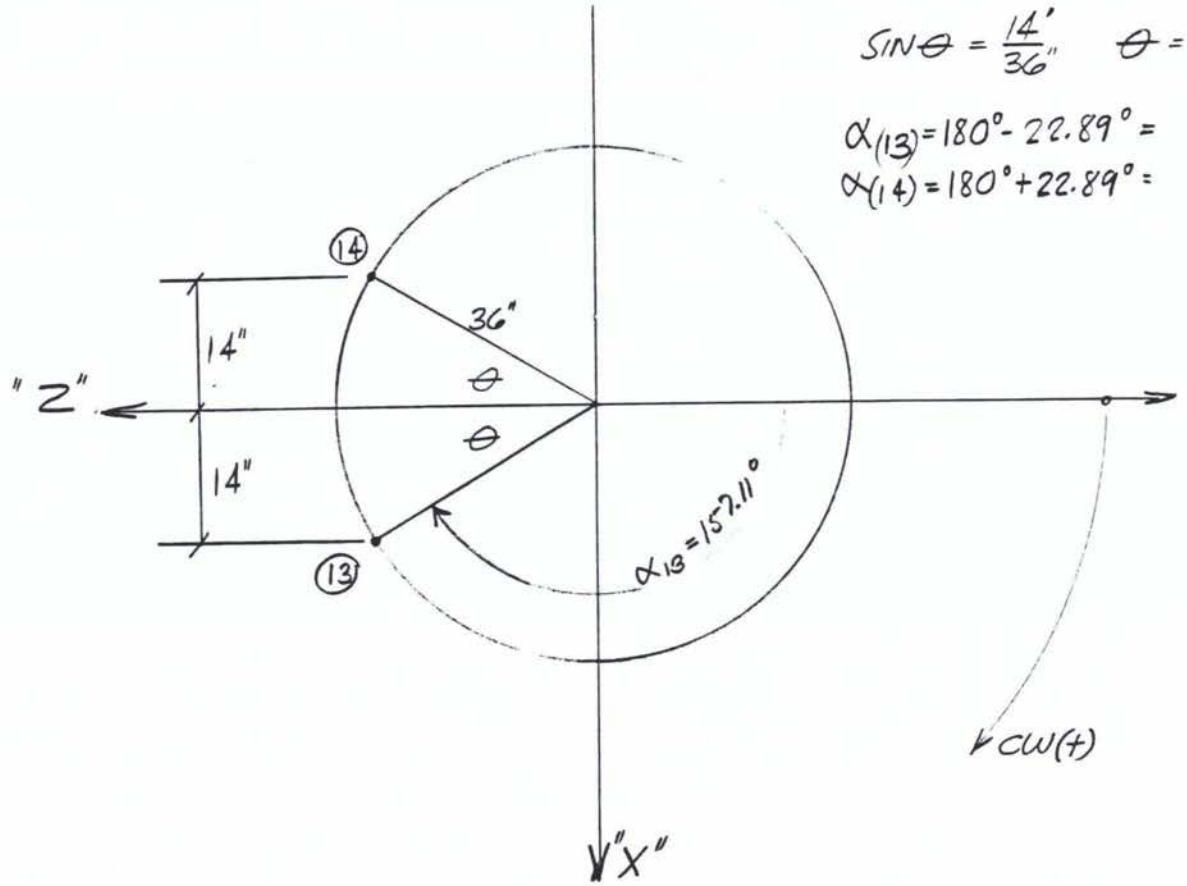

LET THESE RUNS ESTABLISH MIN. THK. FOR:

FURNACE #2 EAST POT

SLURRY POT PUMP BRACKET (FMCP-F4E)
* FURNACE (4) - EAST SLURRY POT
(2)

SUPPORT REACTIONS -UNIT KIPS INCH STRUCTURE TYPE = SPACE

JOINT	LOAD	FORCE-X	FORCE-Y	FORCE-Z	MOM-X	MOM-Y	MOM Z
13	1	0.02	0.65	0.00	-15.04	0.01	-0.42
	2	0.00	0.08	0.00	-2.35	0.00	-0.06
	3	0.00	-0.13	0.00	3.01	0.00	0.08
	4	-0.24	-0.54	0.46	-34.58	-0.05	-1.83
	5	0.00	0.00	-0.22	7.46	-0.01	0.00
	6	0.02	0.73	0.00	-17.39	0.01	-0.49
	7	0.20	0.99	-0.35	12.40	0.04	1.00
	8	0.01	0.59	-0.16	-7.94	0.00	-0.38
14	1	-0.02	0.89	0.00	-20.28	-0.02	0.11
	2	0.00	0.12	0.00	-3.25	0.00	0.01
	3	0.00	-0.18	0.00	4.06	0.00	-0.02
	4	-0.28	0.54	-0.46	34.58	0.02	-6.52
	5	0.00	0.00	-0.31	14.83	0.02	-0.02
	6 (DL+LL)	-0.02	1.02	0.00	-23.54	-0.02	0.11
	7 (DL+SELS)	0.20	0.40	0.35	-44.19	-0.03	4.99
	8	-0.01	0.80	-0.23	-7.13	0.00	0.08

********** END OF LATEST ANALYSIS RESULT **********

78. LOAD LIST 6 TO 8
79. PRINT JOINT DISPLACEMENTS

STEARNS-ROGER DIV.¶ TRANSFORMATION OF COORDINATES PROGRAM

DATE 12-15-1994
TIME 15:36:38

FURNACE #2 - EAST POT
JOINT #14 - LOAD #6
(DL+LL)

VERTICAL VESSEL

NOZZLE ORIENTATION = 202.80 DEG

PIPING LOADS :

FXO =	-20.00 LBS	MXO =	-1961.67 FT-LBS
FYO =	1020.00 LBS	MYO =	-1.67 FT-LBS
FZO =	0.00 LBS	MZO =	9.17 FT-LBS

TRANSLATION OF ROTATED LOADS = 0.00 IN

SECONDARY ROTATION AROUND HORIZONTAL = 0.00 DEG

ROTATED AND/OR TRANSLATED LOADS :

P (Z) =	0.01 KIPS	MC(Y) =	-0.02 IN-KIPS
VC(X) =	-0.02 KIPS	ML(X) =	-21.66 IN-KIPS
VL(Y) =	1.02 KIPS	MT(Z) =	9.22 IN-KIPS

STEARNS-ROGER DIV.¶ TRANSFORMATION OF COORDINATES PROGRAM

DATE 12-15-1994
TIME 15:38:43

VERTICAL VESSEL

FURNACE #2 - EAST POT
JOINT #14 - LOAD #7
(DL+SEISMIC)

NOZZLE ORIENTATION = 202.80 DEG

PIPING LOADS :

FXO =	200.00 LBS	MXO =	-3682.50 FT-LBS
FYO =	400.00 LBS	MYO =	-2.50 FT-LBS
FZO =	350.00 LBS	MZO =	415.83 FT-LBS

TRANSLATION OF ROTATED LOADS = 0.00 IN

SECONDARY ROTATION AROUND HORIZONTAL = 0.00 DEG

ROTATED AND/OR TRANSLATED LOADS :

P (Z) =	0.25 KIPS	MC(Y) =	-0.03 IN-KIPS
VC(X) =	0.32 KIPS	ML(X) =	-38.80 IN-KIPS
VL(Y) =	0.40 KIPS	MT(Z) =	21.72 IN-KIPS

FORM 5007 REV. 4/91

United Engineers & Constructors
A Raytheon Company

GENERAL COMPUTATION SHEET

CALCULATION SET NO.			REV	COMP. BY	CHK'D BY
M-101			0	M. SCHULTE DATE 12/15/94	C.T. DATE 1/25/95
PRELIM.	FINAL	VOID			
SHEET	OF			DATE	DATE
J.O. 9353.001					

PROJECT FMC, CORP.

SUBJECT SLURRY POT PUMP BRACKETS

FURNACE #2-WEST POT

FURNACE #2-WEST

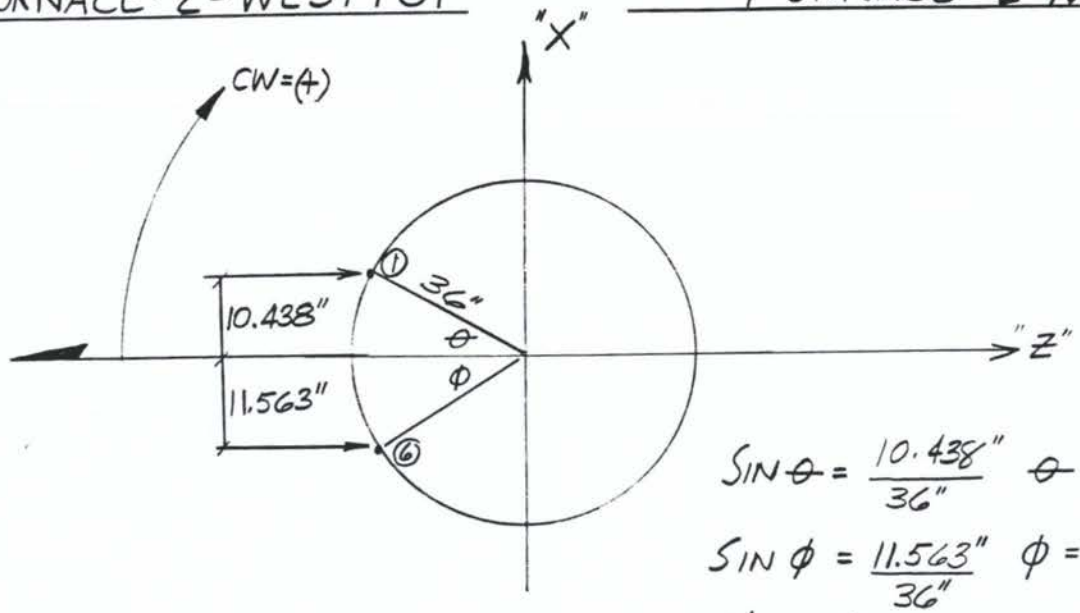

$\sin\theta = \frac{10.438''}{36''}$ $\theta = 16.85°$

$\sin\phi = \frac{11.563''}{36''}$ $\phi = 18.73°$

$\phi' = 360° - 18.73° = 341.27°$

SLURRY POT PUMP BRACKET (FMCP-F2W)
* FURNACE NO 2 - WEST POT

SUPPORT REACTIONS -UNIT KIPS INCH STRUCTURE TYPE = SPACE

JOINT	LOAD	FORCE-X	FORCE-Y	FORCE-Z	MOM-X	MOM-Y	MOM Z
1	1	0.00	0.48	0.00	8.35	0.00	0.00
	2	0.00	0.10	0.00	1.78	0.00	0.00
	3	0.00	-0.10	0.00	-1.67	0.00	0.00
	4	-0.21	0.43	-0.22	7.53	1.17	0.01
	5	0.00	0.00	-0.16	-3.66	0.00	0.00
	6	0.00	0.58	0.00	10.12	0.00	0.00
	7	0.16	0.11	0.17	1.86	-0.87	-0.01
	8	0.00	0.43	0.12	10.26	0.00	0.00
6	1	0.00	0.78	0.00	13.62	0.00	0.00
	2	0.00	0.10	0.00	1.77	0.00	0.00
	3	0.00	-0.16	0.00	-2.72	0.00	0.00
	4	-0.21	-0.43	0.22	-7.53	1.17	0.00
	5	0.00	0.00	-0.26	-6.19	0.00	0.00
	6 (DL+LL)	**0.00**	**0.88**	**0.00**	**15.40**	**0.00**	**0.00**
	7 (DL+SEIS)	**0.16**	**1.02**	**-0.17**	**17.91**	**-0.87**	**0.00**
	8	0.00	0.70	0.20	16.90	0.00	0.00

********** END OF LATEST ANALYSIS RESULT **********

68. LOAD LIST 1 TO 5
69. PRINT JOINT DISPLACEMENTS LIST 3 4

STEARNS-ROGER DIV.¶ TRANSFORMATION OF COORDINATES PROGRAM

DATE 12-15-1994
TIME 08:53:12

VERTICAL VESSEL

FURNACE #2 - WEST POT
JOINT #6 - LOAD #7
(DL+SEIS)

NOZZLE ORIENTATION = 341.27 DEG

PIPING LOADS :

FX0 =	160.00 LBS	MX0 =	1492.50 FT-LBS	17910/12
FY0 =	1020.00 LBS	MY0 =	-72.50 FT-LBS	-870/12
FZ0 =	-170.00 LBS	MZ0 =	0.00 FT-LBS	

TRANSLATION OF ROTATED LOADS = 0.00 IN

SECONDARY ROTATION AROUND HORIZONTAL = 0.00 DEG

ROTATED AND/OR TRANSLATED LOADS :

P (Z) =	0.11 KIPS	MC(Y) =	-0.87 IN-KIPS
VC(X) =	-0.21 KIPS	ML(X) =	-16.96 IN-KIPS
VL(Y) =	1.02 KIPS	MT(Z) =	-5.75 IN-KIPS

STEARNS-ROGER DIV.¶ TRANSFORMATION OF COORDINATES PROGRAM

DATE 12-15-1994
TIME 14:26:37

VERTICAL VESSEL

FURNACE #2-WEST POT
JOINT #6 - LOAD #6
(DL+LL)

NOZZLE ORIENTATION = 341.27 DEG

PIPING LOADS :

FXO =	0.00 LBS	MXO =	1283.33 FT-LBS
FYO =	880.00 LBS	MYO =	0.00 FT-LBS
FZO =	0.00 LBS	MZO =	0.00 FT-LBS

TRANSLATION OF ROTATED LOADS = 0.00 IN

SECONDARY ROTATION AROUND HORIZONTAL = 0.00 DEG

ROTATED AND/OR TRANSLATED LOADS :

P (Z) =	0.00 KIPS	MC(Y) =	0.00 IN-KIPS
VC(X) =	0.00 KIPS	ML(X) =	-14.58 IN-KIPS
VL(Y) =	0.88 KIPS	MT(Z) =	-4.95 IN-KIPS

FORM 5007 REV. 4/91

United Engineers & Constructors
A Raytheon Company

GENERAL COMPUTATION SHEET

CALCULATION SET NO.			REV	COMP. BY	CHK'D BY
F M-101			0	M. Schultz DATE 12/15/94	C.T. [illegible] DATE 1/25/95
PRELIM	FINAL	VOID			
SHEET OF				DATE	DATE
J.O. 9353001					

PROJECT FMC, CORP.

SUBJECT SLURRY POT PUMP BRACKETS

FURNACE #3 - EAST POT

FURNACE #3 - EAST

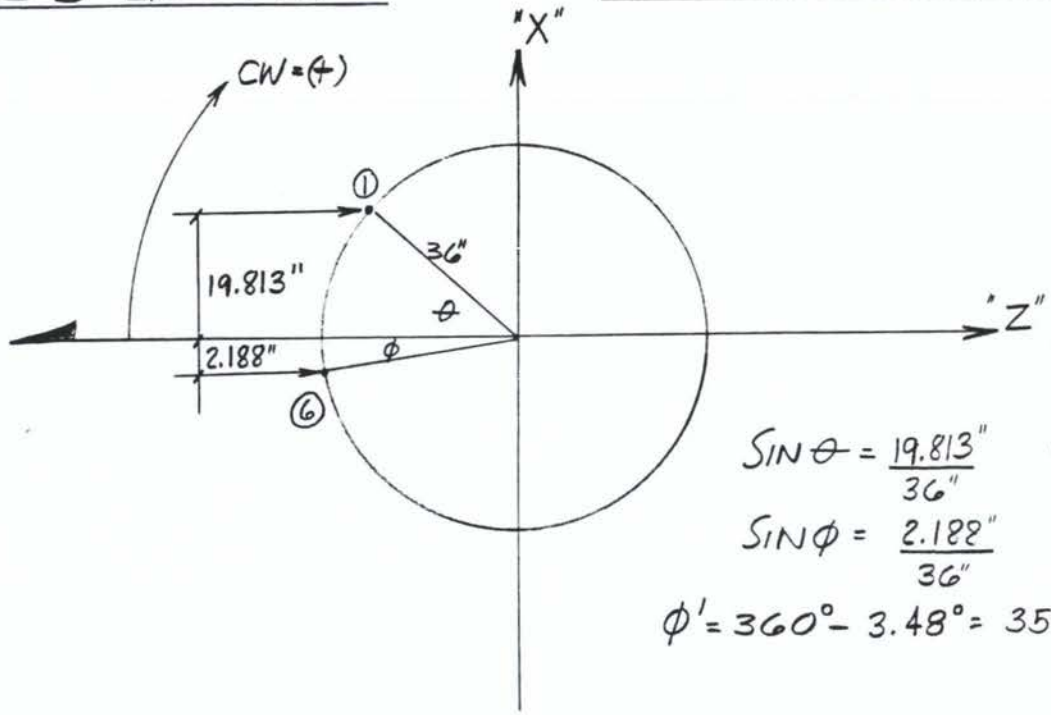

$\sin\theta = \frac{19.813''}{36''}$ $\theta = 33.39°$

$\sin\phi = \frac{2.188''}{36''}$ $\phi = 3.48°$

$\phi' = 360° - 3.48° = 356.52°$

SLURRY POT PUMP BRACKET (FMCP-F3E)
* FURNACE NO 3 - EAST POT

SUPPORT REACTIONS -UNIT KIPS INCH STRUCTURE TYPE = SPACE

JOINT	LOAD	FORCE-X	FORCE-Y	FORCE-Z	MOM-X	MOM-Y	MOM Z
1	1	0.00	0.78	0.00	16.14	0.00	0.00
	2	0.00	0.10	0.00	2.10	0.00	0.00
	3	0.00	-0.16	0.00	-3.23	0.00	0.00
	4	-0.14	0.43	-0.22	8.91	0.94	0.00
	5	0.00	0.00	-0.26	-6.19	0.00	0.00
	6	0.00	0.88	0.00	18.23	0.00	0.00
	7	-0.10	1.02	-0.16	21.20	0.71	0.01
	8	0.00	0.70	0.20	19.16	0.00	0.01
6	1	0.00	0.48	0.00	7.52	0.00	0.01
	2	0.00	0.10	0.00	1.60	0.00	0.00
	3	0.00	-0.10	0.00	-1.50	0.00	0.00
	4	-0.29	-0.43	0.22	-6.78	1.37	0.01
	5	0.00	0.00	-0.16	-3.66	0.00	0.00
	6	0.00	0.58	0.00	9.13	0.00	0.01
	7	-0.22	0.11	0.16	1.68	1.03	0.01
	8	0.00	0.43	0.12	9.52	0.00	0.01

********** END OF LATEST ANALYSIS RESULT **********

68. LOAD LIST 1 TO 5
69. PRINT JOINT DISPLACEMENTS LIST 3 4

STEARNS-ROGER DIV.¶ TRANSFORMATION OF COORDINATES PROGRAM

DATE 12-15-1994
TIME 09:41:53

FURNACE #3 - EAST POT
JOINT #1 - LOAD #7
(DL + SEISMIC)

VERTICAL VESSEL

NOZZLE ORIENTATION = 33.39 DEG

PIPING LOADS :

FXO =	-100.00 LBS	MXO =	1766.67 FT-LBS
FYO =	1020.00 LBS	MYO =	59.17 FT-LBS
FZO =	-160.00 LBS	MZO =	0.00 FT-LBS

TRANSLATION OF ROTATED LOADS = 0.00 IN

SECONDARY ROTATION AROUND HORIZONTAL = 0.00 DEG

ROTATED AND/OR TRANSLATED LOADS :

P (Z) =	0.08 KIPS	MC(Y) =	0.71 IN-KIPS
VC(X) =	0.17 KIPS	ML(X) =	-17.70 IN-KIPS
VL(Y) =	1.02 KIPS	MT(Z) =	11.67 IN-KIPS

STEARNS-ROGER DIV.¶ TRANSFORMATION OF COORDINATES PROGRAM

DATE 12-15-1994
TIME 14:30:57

FURNACE #3 - EAST POT
JOINT #1 - LOAD #6
(DL+LL)

VERTICAL VESSEL

NOZZLE ORIENTATION = 33.39 DEG

PIPING LOADS :

FXO =	0.00 LBS	MXO =	1519.17 FT-LBS
FYO =	880.00 LBS	MYO =	0.00 FT-LBS
FZO =	0.00 LBS	MZO =	0.00 FT-LBS

TRANSLATION OF ROTATED LOADS = 0.00 IN

SECONDARY ROTATION AROUND HORIZONTAL = 0.00 DEG

ROTATED AND/OR TRANSLATED LOADS :

P (Z) =	0.00 KIPS	MC(Y) =	0.00 IN-KIPS
VC(X) =	0.00 KIPS	ML(X) =	-15.22 IN-KIPS
VL(Y) =	0.88 KIPS	MT(Z) =	10.03 IN-KIPS

FORM 5007 REV. 4/91

United Engineers & Constructors
A Raytheon Company

GENERAL COMPUTATION SHEET

CALCULATION SET NO			REV	COMP. BY	CHK'D BY
M-101			0	M. SHULR DATE 12/15/94	C.T. DATE 1/25/95
PRELIM	FINAL	VOID			
SHEET	OF			DATE	DATE
J.O. 9353001					

PROJECT FMC, CORP.

SUBJECT SLURRY POT PUMP BRACKETS

FURNACE #3 - WEST POT

FURNACE #3-WEST

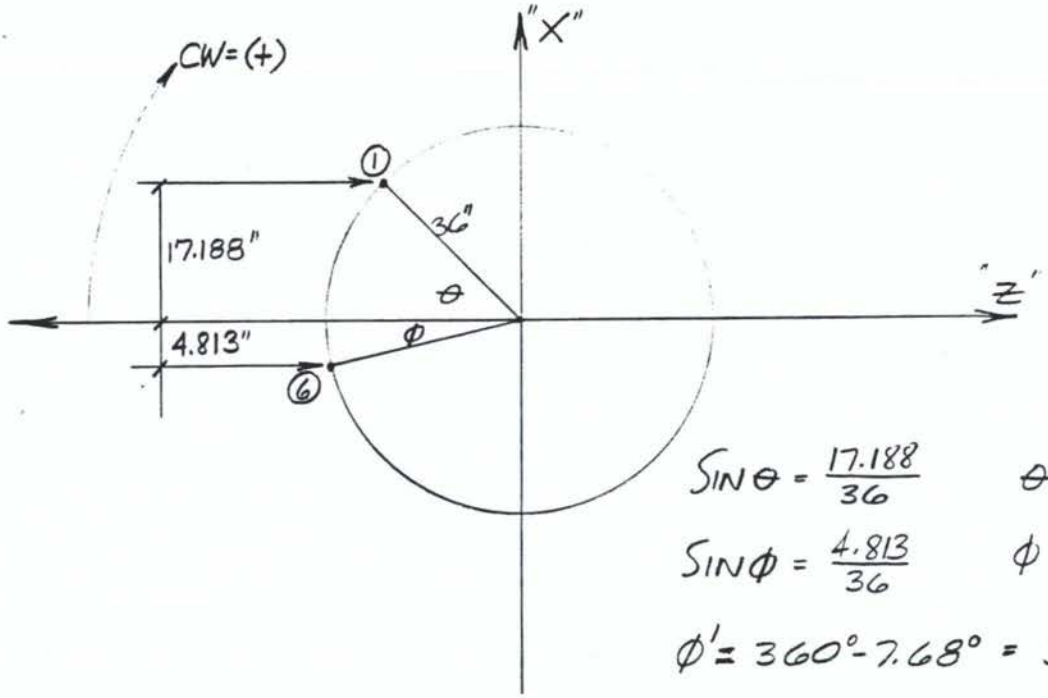

$\sin\theta = \frac{17.188}{36}$ $\theta = 28.52°$

$\sin\phi = \frac{4.813}{36}$ $\phi = 7.68°$

$\phi' = 360° - 7.68° = 352.32°$

SLURRY POT PUMP BRACKET (FMCP-F3W)
* FURNACE NO 3 - WEST POT

SUPPORT REACTIONS -UNIT KIPS INCH STRUCTURE TYPE = SPACE

JOINT	LOAD	FORCE-X	FORCE-Y	FORCE-Z	MOM-X	MOM-Y	MOM Z
1	1	0.00	0.48	0.00	9.78	0.00	0.00
	2	0.00	0.10	0.00	2.07	0.00	0.00
	3	0.00	-0.10	0.00	-1.96	0.00	0.00
	4	-0.15	0.43	-0.22	8.80	0.98	0.01
	5	0.00	0.00	-0.16	-3.65	0.00	0.00
	6	0.00	0.58	0.00	11.85	0.00	0.00
	7 (DL+SEIS)	-0.11	0.75	-0.17	15.40	0.73	0.00
	8	0.11	0.11	0.17	2.20	-0.73	0.00
	9	0.00	0.43	0.12	11.54	0.00	0.00
6	1	0.00	0.78	0.00	12.47	0.00	0.00
	2	0.00	0.10	0.00	1.63	0.00	0.00
	3	0.00	-0.16	0.00	-2.49	0.00	0.00
	4	-0.28	-0.43	0.22	-6.89	1.37	0.01
	5	0.00	0.00	-0.26	-6.20	0.00	0.00
	6 (DL+LL)	0.00	0.88	0.00	14.10	0.00	0.00
	7	-0.21	0.38	0.17	6.05	1.03	0.01
	8 (DL+SEIS)	0.21	1.02	-0.17	16.39	-1.03	0.00
	9	0.00	0.70	0.20	15.87	0.00	0.00

********** END OF LATEST ANALYSIS RESULT **********

70. LOAD LIST 1 TO 5
71. PRINT JOINT DISPLACEMENTS LIST 3 4

STEARNS-ROGER DIV.¶ TRANSFORMATION OF COORDINATES PROGRAM

DATE 12-15-1994
TIME 14:41:29

VERTICAL VESSEL

FURNACE #3 - WEST POT
JOINT #6 - LOAD #6
(DL+LL)

NOZZLE ORIENTATION = 352.32 DEG

PIPING LOADS :

FXO =	0.00 LBS	MXO =	1175.00 FT-LBS
FYO =	880.00 LBS	MYO =	0.00 FT-LBS
FZO =	0.00 LBS	MZO =	0.00 FT-LBS

TRANSLATION OF ROTATED LOADS = 0.00 IN

SECONDARY ROTATION AROUND HORIZONTAL = 0.00 DEG

ROTATED AND/OR TRANSLATED LOADS :

P (Z) =	0.00 KIPS	MC(Y) =	0.00 IN-KIPS
VC(X) =	0.00 KIPS	ML(X) =	-13.97 IN-KIPS
VL(Y) =	0.88 KIPS	MT(Z) =	-1.88 IN-KIPS

STEARNS-ROGER DIV.¶ TRANSFORMATION OF COORDINATES PROGRAM

DATE 12-15-1994
TIME 11:21:15

FURNACE #3 - WEST POT
JOINT #6 - LOAD #8
(DL+SEISMIC)

VERTICAL VESSEL

NOZZLE ORIENTATION = 352.32 DEG

PIPING LOADS :

FXO =	210.00 LBS	MXO =	1365.83 FT-LBS
FYO =	1020.00 LBS	MYO =	-85.83 FT-LBS
FZO =	-170.00 LBS	MZO =	0.00 FT-LBS

TRANSLATION OF ROTATED LOADS = 0.00 IN

SECONDARY ROTATION AROUND HORIZONTAL = 0.00 DEG

ROTATED AND/OR TRANSLATED LOADS :

P (Z) =	0.14 KIPS	MC(Y) =	-1.03 IN-KIPS
VC(X) =	-0.23 KIPS	ML(X) =	-16.24 IN-KIPS
VL(Y) =	1.02 KIPS	MT(Z) =	-2.19 IN-KIPS

STEARNS-ROGER DIV.¶ TRANSFORMATION OF COORDINATES PROGRAM

DATE 12-15-1994
TIME 11:16:51

FURNACE #3 - WEST POT
JOINT #1 - LOAD #7
(DL + SEISMIC)

VERTICAL VESSEL

NOZZLE ORIENTATION = 28.52 DEG

PIPING LOADS :

FXO =	-110.00 LBS	MXO =	1283.33 FT-LBS
FYO =	750.00 LBS	MYO =	60.83 FT-LBS
FZO =	-170.00 LBS	MZO =	0.00 FT-LBS

TRANSLATION OF ROTATED LOADS = 0.00 IN

SECONDARY ROTATION AROUND HORIZONTAL = 0.00 DEG

ROTATED AND/OR TRANSLATED LOADS :

P (Z) =	0.10 KIPS	MC(Y) =	0.73 IN-KIPS
VC(X) =	0.18 KIPS	ML(X) =	-13.53 IN-KIPS
VL(Y) =	0.75 KIPS	MT(Z) =	7.35 IN-KIPS

FORM 5007 REV. 4/91

United Engineers & Constructors
A Raytheon Company

GENERAL COMPUTATION SHEET

CALCULATION SET NO			REV	COMP. BY	CHK'D BY
M-101			0	M. Shute	[illegible]
PRELIM	FINAL	VOID		DATE 12/15/94	DATE 12/25/95
SHEET	OF			DATE	DATE
J.O. 9353 001					

PROJECT FMC, CORP.

SUBJECT SLURRY POT PUMP BRACKETS

FURNACE #4 - EAST POT

FURNACE #4 - EAST

$\sin\theta = \frac{13''}{36''}$ $\theta = 21.17°$

$\alpha_{(13)} = 180° - 21.17° = 158.83°$

$\alpha_{(14)} = 180° + 21.17° = 201.17°$

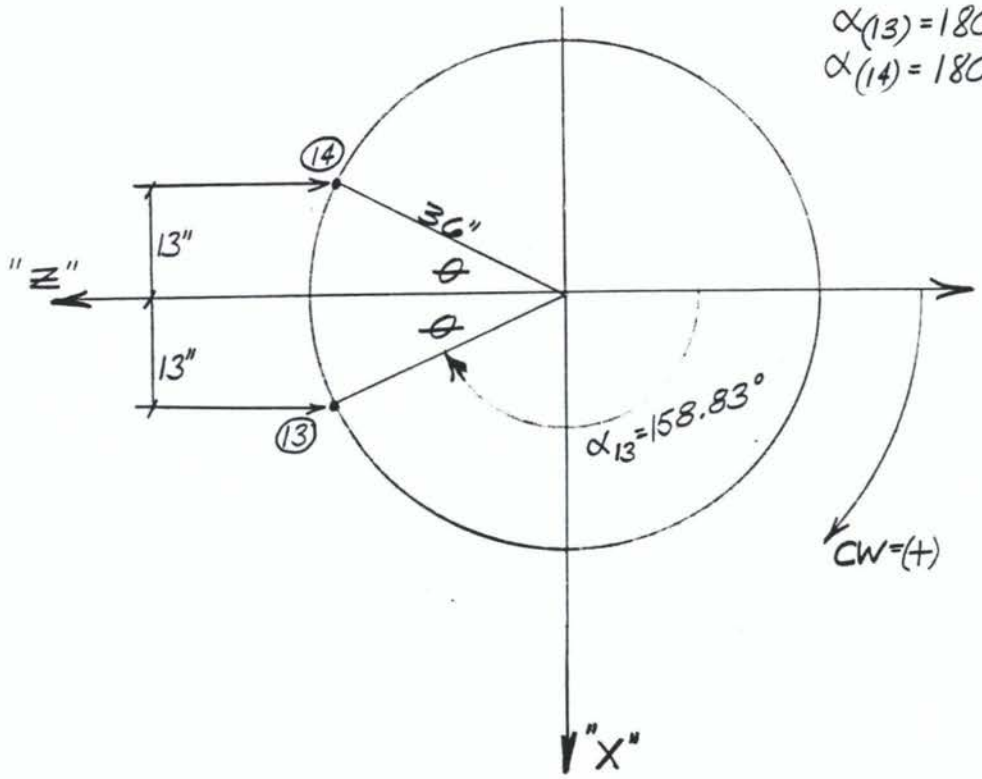

SLURRY POT PUMP BRACKET (FMCP-F4E)
* FURNACE 4 - EAST SLURRY POT

SUPPORT REACTIONS -UNIT KIPS INCH STRUCTURE TYPE = SPACE

JOINT	LOAD	FORCE-X	FORCE-Y	FORCE-Z	MOM-X	MOM-Y	MOM Z
13	1	0.02	0.65	0.00	-15.04	0.01	-0.42
	2	0.00	0.08	0.00	-2.35	0.00	-0.06
	3	0.00	-0.13	0.00	3.01	0.00	0.08
	4	-0.24	-0.54	0.46	-34.58	-0.05	-1.83
	5	0.00	0.00	-0.22	7.46	-0.01	0.00
	6	0.02	0.73	0.00	-17.39	0.01	-0.49
	7	0.20	0.99	-0.35	12.40	0.04	1.00
	8	0.01	0.59	-0.16	-7.94	0.00	-0.38
14	1	-0.02	0.89	0.00	-20.28	-0.02	0.11
	2	0.00	0.12	0.00	-3.25	0.00	0.01
	3	0.00	-0.18	0.00	4.06	0.00	-0.02
	4	-0.28	0.54	-0.46	34.58	0.02	-6.52
	5	0.00	0.00	-0.31	14.83	0.02	-0.02
	6 (DL+LL)	**-0.02**	**1.02**	**0.00**	**-23.54**	**-0.02**	**0.11**
	7 (DL+SEIS)	**0.20**	**0.40**	**0.35**	**-44.19**	**-0.03**	**4.99**
	8	-0.01	0.80	-0.23	-7.13	0.00	0.08

********** END OF LATEST ANALYSIS RESULT **********

78. LOAD LIST 6 TO 8
79. PRINT JOINT DISPLACEMENTS

STEARNS-ROGER DIV.¶ TRANSFORMATION OF COORDINATES PROGRAM

DATE 12-15-1994
TIME 14:52:15

VERTICAL VESSEL

FURNACE #4 - EAST POT
JOINT #14 - LOAD #6
(DL+LL)

NOZZLE ORIENTATION = 201.17 DEG

PIPING LOADS :

FXO =	-20.00 LBS	MXO =	-1961.67 FT-LBS
FYO =	1020.00 LBS	MYO =	-1.67 FT-LBS
FZO =	0.00 LBS	MZO =	9.17 FT-LBS

TRANSLATION OF ROTATED LOADS = 0.00 IN

SECONDARY ROTATION AROUND HORIZONTAL = 0.00 DEG

ROTATED AND/OR TRANSLATED LOADS :

P (Z) =	0.01 KIPS	MC(Y) =	-0.02 IN-KIPS
VC(X) =	-0.02 KIPS	ML(X) =	-21.91 IN-KIPS
VL(Y) =	1.02 KIPS	MT(Z) =	8.60 IN-KIPS

STEARNS-ROGER DIV.¶ TRANSFORMATION OF COORDINATES PROGRAM

DATE 12-15-1994
TIME 14:57:26

VERTICAL VESSEL

FURNACE #4 - EAST POT
JOINT #14 - LOAD #7
(DL+SEISMIC)

NOZZLE ORIENTATION = 201.17 DEG

PIPING LOADS :

FXO =	200.00 LBS	MXO =	-3682.50 FT-LBS
FYO =	400.00 LBS	MYO =	-2.50 FT-LBS
FZO =	350.00 LBS	MZO =	415.83 FT-LBS

TRANSLATION OF ROTATED LOADS = 0.00 IN

SECONDARY ROTATION AROUND HORIZONTAL = 0.00 DEG

ROTATED AND/OR TRANSLATED LOADS :

P (Z) =	0.25 KIPS	MC(Y) =	-0.03 IN-KIPS
VC(X) =	0.31 KIPS	ML(X) =	-39.41 IN-KIPS
VL(Y) =	0.40 KIPS	MT(Z) =	20.61 IN-KIPS

FORM 5007 REV. 4/91

United Engineers & Constructors
A Raytheon Company

GENERAL COMPUTATION SHEET

CALCULATION SET NO.			REV.	COMP. BY	CHK'D BY
M-101			0	M. Schulz DATE 12/15/94	C.T. DATE 1/25/95
PRELIM	FINAL	VOID			
SHEET	OF			DATE	DATE
J.O. 9353001					

PROJECT FMC, CORP.

SUBJECT SLURRY POT PUMP BRACKETS

FURNACE #4 - WEST POT

FURNACE #4 - WEST

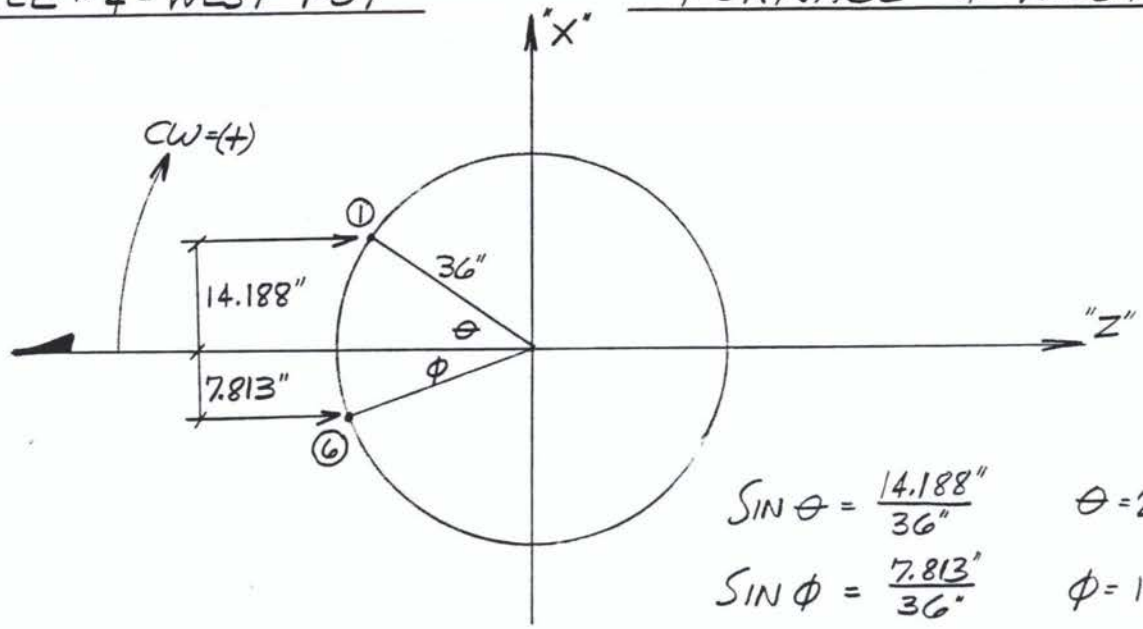

$$\sin\theta = \frac{14.188''}{36''} \qquad \theta = 23.21^\circ$$

$$\sin\phi = \frac{7.813''}{36''} \qquad \phi = 12.53^\circ$$

$$\phi' = 360^\circ - 12.53^\circ = 347.47^\circ$$

SLURRY POT PUMP BRACKET (FMCP-F4W)
* FURNACE NO 4 - WEST POT

SUPPORT REACTIONS -UNIT KIPS INCH STRUCTURE TYPE = SPACE

JOINT	LOAD	FORCE-X	FORCE-Y	FORCE-Z	MOM-X	MOM-Y	MOM Z
1	1	0.00	0.48	0.00	10.75	0.00	0.00
	2	0.00	0.10	0.00	2.27	0.00	0.00
	3	0.00	-0.10	0.00	-2.15	0.00	0.00
	4	-0.19	0.42	-0.26	9.64	1.42	0.01
	5	0.00	0.00	-0.16	-3.66	0.00	0.00
	6	0.00	0.58	0.00	13.02	0.00	0.00
	7 (DL+SEISMIC)	-0.14	0.75	-0.20	16.91	1.07	0.00
	8	0.14	0.12	0.20	2.44	-1.07	-0.01
	9	0.00	0.44	0.12	12.42	0.00	0.00
6	1	0.00	0.78	0.00	15.96	0.00	0.00
	2	0.00	0.10	0.00	2.08	0.00	0.00
	3	0.00	-0.16	0.00	-3.19	0.00	0.00
	4	-0.24	-0.42	0.26	-8.79	1.62	0.01
	5	0.00	0.00	-0.26	-6.19	0.00	0.00
	6 (DL+LL)	0.00	0.88	0.00	18.03	0.00	0.00
	7	-0.18	0.38	0.20	7.77	1.21	0.01
	8 (DL+SEIS)	0.18	1.02	-0.20	20.96	-1.21	-0.01
	9	0.00	0.70	0.20	19.01	0.00	0.00

********** END OF LATEST ANALYSIS RESULT **********

70. LOAD LIST 1 TO 5
71. PRINT JOINT DISPLACEMENTS LIST 3 4

STEARNS-ROGER DIV.¶ TRANSFORMATION OF COORDINATES PROGRAM

DATE 12-15-1994
TIME 11:54:16

FURNACE #4 - WEST POT
JOINT #1 - LOAD #7
(DL + SEISMIC)

VERTICAL VESSEL

NOZZLE ORIENTATION = 23.21 DEG

PIPING LOADS :

FX0 =	-140.00 LBS	MX0 =	1409.17 FT-LBS
FY0 =	750.00 LBS	MY0 =	89.17 FT-LBS
FZ0 =	-200.00 LBS	MZ0 =	0.00 FT-LBS

TRANSLATION OF ROTATED LOADS = 0.00 IN

SECONDARY ROTATION AROUND HORIZONTAL = 0.00 DEG

ROTATED AND/OR TRANSLATED LOADS :

P (Z) =	0.13 KIPS	MC(Y) =	1.07 IN-KIPS
VC(X) =	0.21 KIPS	ML(X) =	-15.54 IN-KIPS
VL(Y) =	0.75 KIPS	MT(Z) =	6.66 IN-KIPS

STEARNS-ROGER DIV.¶ TRANSFORMATION OF COORDINATES PROGRAM

DATE 12-15-1994
TIME 14:46:18

FURNACE #4 - WEST POT
JOINT # 6 - LOAD #6
(DL+LL)

VERTICAL VESSEL

NOZZLE ORIENTATION = 347.47 DEG

PIPING LOADS :

FXO =	0.00 LBS	MXO =	1502.50 FT-LBS
FYO =	880.00 LBS	MYO =	0.00 FT-LBS
FZO =	0.00 LBS	MZO =	0.00 FT-LBS

TRANSLATION OF ROTATED LOADS = 0.00 IN

SECONDARY ROTATION AROUND HORIZONTAL = 0.00 DEG

ROTATED AND/OR TRANSLATED LOADS :

P (Z) =	0.00 KIPS	MC(Y) =	0.00 IN-KIPS
VC(X) =	0.00 KIPS	ML(X) =	-17.60 IN-KIPS
VL(Y) =	0.88 KIPS	MT(Z) =	-3.91 IN-KIPS

STEARNS-ROGER DIV.¶ TRANSFORMATION OF COORDINATES PROGRAM

DATE 12-15-1994
TIME 11:58:49

FURNACE #4 - WEST POT
JOINT #6 - LOAD #8
(DL + SEISMIC)

VERTICAL VESSEL

NOZZLE ORIENTATION = 347.47 DEG

PIPING LOADS :

FXO =	180.00 LBS	MXO =	1746.67 FT-LBS
FYO =	1020.00 LBS	MYO =	-100.83 FT-LBS
FZO =	-200.00 LBS	MZO =	-0.83 FT-LBS

TRANSLATION OF ROTATED LOADS = 0.00 IN

SECONDARY ROTATION AROUND HORIZONTAL = 0.00 DEG

ROTATED AND/OR TRANSLATED LOADS :

P (Z) =	0.16 KIPS	MC(Y) =	-1.21 IN-KIPS
VC(X) =	-0.22 KIPS	ML(X) =	-20.46 IN-KIPS
VL(Y) =	1.02 KIPS	MT(Z) =	-4.54 IN-KIPS

FORM 5007 REV. 4/91

Raytheon
Engineers & Constructors

GENERAL COMPUTATION SHEET

CALCULATION SET NO.			REV	COMP. BY	CHK'D BY
M-101			0	M. SCHULTZ DATE 12/20/94	C.T. DATE 1/25/95
PRELIM.	FINAL	VOID			
SHEET	OF			DATE	DATE
J.O. 9353.001					

PROJECT FMC CORP

SUBJECT SLURRY POT PUMP BRACKETS

FURNACE #1 - EAST POT

JOINT #1 - LOAD #6 (DL+LL)

3/8" THK. SHELL IS OK

.250" THK. SHELL IS MINIMUM ALLOWABLE:

MAX. MEMBRANE STRESS (CIRCUMF.)

287 PSI + 11,579 PSI = 11,866 PSI < 1.1 x 12,700 = 13,970 PSI ✓

MAX. SURFACE STRESS (LONGIT.)

144 PSI + 38,296 = 38440 PSI ≈ 3.0 x 12,700 = 38,100 PSI ✓

JOINT #1 - LOAD #8 (DL + SEISMIC)

3/8" THK. SHELL IS OK

0.290" THK. SHELL IS MINIMUM ALLOWABLE:

MAX. MEMBRANE STRESS (CIRCUMF.)

247 PSI + 9836 PSI - 325 PSI = 9,758 PSI < 1.1 x 12,700 = 13,970 PSI ✓

-325 PSI - 9836 PSI = -10,161 PSI ✓

MAX. SURFACE STRESS (LONGIT.)

-38,023 PSI = -38,023 PSI < 3.0 x 12700 = 38,100 PSI ✓

JOINT #6 - LOAD #7 (DL+SEISMIC)

3/8" THK. SHELL IS OK

0.240" THK. SHELL IS MINIMUM ALLOWABLE:

MAX. MEMBRANE STRESS (CIRCUMF.)

299 PSI + 11,030 PSI - 407 PSI = 10,922 PSI < 1.1 x 12,700 = 13,970 PSI ✓

- 11,030 PSI - 407 PSI = -11,437 PSI ✓

MAX. SURFACE STRESS (LONGIT.)

- 37,847 PSI = -37,847 PSI < 3.0 x 12,700 = 38,100 PSI ✓

CRITICAL LOAD CONDITION - MIN. THK. = 0.290"

APPLIES TO FURNACE #1 EAST & WEST POT
FURNACE #2 WEST POT
FURNACE #3 EAST & WEST POT

FORM 5007 REV. 4/91

United Engineers & Constructors
A Raytheon Company

GENERAL COMPUTATION SHEET

CALCULATION SET NO			REV	COMP. BY	CHK'D BY
M-101			0	M. SCHULTZ	C.T. [illegible]
PRELIM	FINAL	VOID		DATE 12/14/94	DATE 1/25/95
SHEET	OF			DATE	DATE
J.O. 9353.001					

PROJECT FMC CORP.

SUBJECT SLURRY POT PUMP BRACKETS

FURNACE #1 - EAST POT

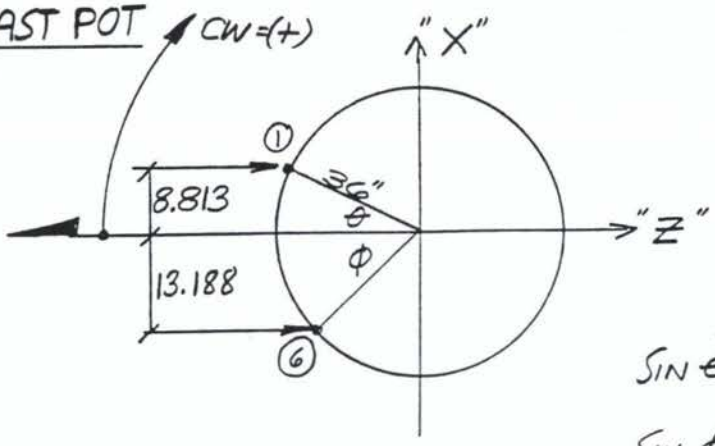

$\sin\theta = \frac{8.813''}{36''}$ $\theta = 14.17°$

$\sin\phi = \frac{13.188''}{36''}$ $\phi = 21.49°$

$\phi' = 360° - 21.49° = 338.51°$

LET THESE RUNS ESTABLISH MIN. THK. FOR:

FURNACE #1 EAST POT
FURNACE #1 WEST POT
FURNACE #2 WEST POT
FURNACE #3 EAST POT
FURNACE #3 WEST POT

SLURRY POT PUMP BRACKET (FMCP-F1E)
* FURNACE NO 1 - EAST POT

SUPPORT REACTIONS -UNIT KIPS INCH STRUCTURE TYPE = SPACE

JOINT	LOAD	FORCE-X	FORCE-Y	FORCE-Z	MOM-X	MOM-Y	MOM Z
1	1	0.00	0.78	0.00	17.71	0.00	0.00
	2	0.00	0.10	0.00	2.30	0.00	0.00
	3	0.00	-0.16	0.00	-3.54	0.00	0.00
	4	-0.23	0.42	-0.28	9.74	1.79	0.01
	5	0.00	0.00	-0.27	-6.19	0.00	0.00
	6 (DL+LL)	0.00	0.88	0.00	20.01	0.00	0.00
	7 (DL+SEIS)	0.17	0.38	0.21	8.63	-1.34	-0.01
	8	-0.17	1.02	-0.21	23.25	1.34	0.01
	9	0.00	0.70	0.20	20.58	0.00	0.00
6	1	0.00	0.49	0.00	11.60	0.00	0.00
	2	0.00	0.10	0.00	2.45	0.00	0.00
	3	0.00	-0.10	0.00	-2.32	0.00	0.00
	4	-0.20	-0.42	0.28	-10.38	1.64	0.01
	5	0.00	0.00	-0.16	-3.66	0.00	0.00
	6 (DL+LL)	0.00	0.59	0.00	14.05	0.00	0.00
	7 (DL+SEIS)	0.15	0.76	-0.21	18.23	-1.23	0.00
	8	-0.15	0.12	0.21	2.66	1.23	0.01
	9	0.00	0.44	0.12	13.19	0.00	0.00

********** END OF LATEST ANALYSIS RESULT **********

70. LOAD LIST 1 TO 5
71. PRINT JOINT DISPLACEMENTS LIST 3 4

STEARNS-ROGER DIV.¶ TRANSFORMATION OF COORDINATES PROGRAM

DATE 12-15-1994
TIME 14:09:59

FURNACE #1 - EAST POT
JOINT #1 - LOAD #6
(DL+LL) S_A = 1.15m & 3.05m

VERTICAL VESSEL

NOZZLE ORIENTATION = 14.17 DEG

PIPING LOADS :

FXO =	0.00 LBS	MXO =	1667.50 FT-LBS
FYO =	880.00 LBS	MYO =	0.00 FT-LBS
FZO =	0.00 LBS	MZO =	0.00 FT-LBS

TRANSLATION OF ROTATED LOADS = 0.00 IN

SECONDARY ROTATION AROUND HORIZONTAL = 0.00 DEG

ROTATED AND/OR TRANSLATED LOADS :

P (Z) =	0.00 KIPS	MC(Y) =	0.00 IN-KIPS
VC(X) =	0.00 KIPS	ML(X) =	-19.40 IN-KIPS
VL(Y) =	0.88 KIPS	MT(Z) =	4.90 IN-KIPS

****

PRESSURE VESSEL DESIGN PRO CORP.
HOUSTON TX

****

--- COMPUTATION OF LOCAL STRESSES ---

CUSTOMER NAME : FMC CORP.

P.O. NO. : 9353001

ITEM NO. : F#1-EAST S/O NO. : .375

DESIGNER NAME : M.SCHULTZ DATE : 12-19-1994

****

--- Stresses in Cylindrical Shell ---

Attachment Mk. :JT1LD6

M.A.W.P. : 2 psi.
Des. temp. : 100 deg. F

Vessel

Cyl. ID. : 71.25 in. Cyl. mean rad. : 35.8125 in. (corr.)
Cyl. thk. : .375 in. (.375 in. (corr.))
Material : SA 36
Allow. stress : 12700 psi.

Attachment

Shape : Rectangular
Cl : 7.75 in.
Cc : .1875 in.

Loads & Moments

Radial load P : 0 lb.
Shear load Vc : 0 lb.
Shear load Vl : 880 lb.
Moment Mc : 0 in.-lb.
Moment Ml :-19400 in.-lb.
Moment Mt : 4900 in.-lb.

Stress coefficient factors

Kn : 1	Kb : 1	Iv : 1	
C1a : 16.4399	C1b : 16.78083	C2a : .218978	C2b : .1604909
C3 : 7.754372E-02	C4 : .1009	C5 : 7.252811	C6 : 2.568189E-02
L1a : 17.85809	L1b : 17.25823	L2a : .1679735	L2b : .1235527
L3 : .3252309	L4 : .06	L5 : .6576346	L6 : 6.549262E-02
K1(Nf) : .91	K1(Nx) : 1.68	K1(Mf) : 1.76	K1(Mx) : 1.2
K2(Nf) : 1.48	K2(Nx) : 1.2	K2(Mf) : .88	K2(Mx) : 1.25
Kc(é) : 1.005836	Kc(Mf) : 1.278839	Kc(Mx) : 1.646668	
Cc(Nf) : .15	Cc(Nx) : .44		

Kl(é) : 1.334016 Kl(Mf) : 2.069142 Kl(Mx) : 1.198229
Cl(Nf) : .77 Cl(Nx) : .24

Item no. : F#1-EAST S/o no. : .375

****

Geometric parameters

Gamma = Rm/T = 35.8125 / .375
= 95.5

á1x = Cc/Rm = .1875 / 35.8125 = 5.235602E-03
á2x = Cl/Rm = 7.75 / 35.8125 = .2164049
áx = á1x/á2x = 5.235602E-03 / .2164049 = 2.419355E-02

á1 : 5.468157E-02 á2 : 2.840488E-02 á3 : 1.810228E-02
á4 : .0231499 á5 : 6.258932E-02 á6 : .1295062

Circumferential stresses :

Membrane due to P (åc1) = Kn(C1x)(P/(Rm(T)))
= 1 (C1x) (0 / (35.8125 (.375)))
= 0 psi. (0 psi.)

Bending due to P (åc2) = Kb(C2x)(6(P)/(T^2))
= 1 (C2x) (6 (0) / (.375 ^ 2))
= 0 psi. (0 psi.)

Membrane due to Mc (åc3) = Kn(C3)(Mc/((Rm^2)(á)(T)))
= 1 (7.754372E-02) (0 / ((35.8125 ^ 2) (1.810228E-02) (.375)))
= 0 psi.

Bending due to Mc (åc4) = Kb(C4)(6(Mc)/((T^2)(Rm)(á)))
= 1 (.1009) (6 (0) / ((.375 ^ 2) (35.8125) (.0231499)))
= 0 psi.

Membrane due to Ml (åc5) = Kn(C5)(Ml/((Rm^2)(á)(T)))
= 1 (7.252811) (-19400 / ((35.8125 ^ 2) (6.258932E-02) (.375)))
=-4675 psi.

Bending due to Ml (åc6) = Kb(C6)(6(Ml)/((T^2)(Rm)(á)))
= 1 (2.568189E-02) (6 (-19400) / ((.375 ^ 2) (35.8125) (.1295062)))
=-4584 psi.

Press. stress (åc7) = Dp(Rm)(Iv)/(T)
= 2 (35.8125) (1) / (.375)
= 191 psi.

Stresses	Au	Al	Bu	Bl	Cu	Cl	Du	Dl
-åc 1	0	0	0	0	0	0	0	0
-åc 2	0	0	0	0	0	0	0	0
-åc 3	0	0	0	0	0	0	0	0
-åc 4	0	0	0	0	0	0	0	0
-åc 5	4675	4675	-4675	-4675	0	0	0	0
-åc 6	4584	-4584	-4584	4584	0	0	0	0
-åc	9259	91	-9259	-91	0	0	0	0
-åp	191	191	191	191	191	191	191	191

-åct	9450	282	-9068	100	191	191	191	191

Item no. : F#1-EAST S/o no. : .375

****

eometric parameters

Gamma = 95.5

áx1 : 5.235602E-03
áx2 : .2164049
áx : 2.419355E-02

á1 : 4.241911E-02 á2 : 4.460884E-02 á3 : 1.810228E-02
á4 : 2.980845E-02 á5 : 6.258932E-02 á6 : 7.499635E-02

Longitudinal stresses :

Membrane due to P (ål1) = Kn(L1x)(P/(Rm(T)))
= 1 (L1x) (0 / (35.8125 (.375)))
= 0 psi. (0 psi.)

Bending due to P (ål2) = Kb(L2x)(6(P)/(T^2))
= 1 (L2x) (6 (0) / (.375 ^ 2))
= 0 psi. (0 psi.)

Membrane due to Mc (ål3) = Kn(L3)(Mc/((Rm^2)(á)(T)))
= 1 (.3252309) (0 / ((35.8125 ^ 2) (1.810228E-02) (.375)))
= 0 psi.

Bending due to Mc (ål4) = Kb(L4)(6(Mc)/((T^2)(Rm)(á)))
= 1 (.06) (6 (0) / ((.375 ^ 2) (35.8125) (2.980845E-02)))
= 0 psi.

Membrane due to Ml (ål5) = Kn(L5)(Ml/((Rm^2)(á)(T)))
= 1 (.6576346) (-19400 / ((35.8125 ^ 2) (6.258932E-02) (.375)))
=-425 psi.

Bending due to Ml (ål6) = Kb(L6)(6(Ml)/((T^2)(Rm)(á)))
= 1 (6.549262E-02) (6 (-19400) / ((.375 ^ 2) (35.8125) (7.499635E-02)))
=-20185 psi.

Press. stress (ål7) = Dp(Rm)(Iv)/(2(T))
= 2 (35.8125) (1) / (2 (.375))
= 96 psi.

Stresses	Au	Al	Bu	Bl	Cu	Cl	Du	Dl
-ål 1	0	0	0	0	0	0	0	0
-ål 2	0	0	0	0	0	0	0	0
-ål 3	0	0	0	0	0	0	0	0
-ål 4	0	0	0	0	0	0	0	0
-ål 5	425	425	-425	-425	0	0	0	0
ål 6	20185	-20185	-20185	20185	0	0	0	0
-ål	20610	-19760	-20610	19760	0	0	0	0
-åp	96	96	96	96	96	96	96	96

$S_S = 20{,}610 + 96 = 20{,}706 < (3)(12{,}700)$

-ålt	20706	-19664	-20514	19856	96	96	96	96

Item no. : F#1-EAST S/o no. : .375

****

Shear stresses :

Shear due to Vl (ås1) = Vl/(4(Cl)(T))
= 880 / (4 (7.75) (.375))
= 76 psi.

Shear due to Vc (ås2) = Vc/(4(Cc)(T))
= 0 / (4 (.1875) (.375))
= 0 psi.

Shear due to Mt (ås3) = 0 psi.

Stresses	Au	Al	Bu	Bl	Cu	Cl	Du	Dl
-ås 1	0	0	0	0	-76	-76	76	76
-ås 2	0	0	0	0	0	0	0	0
-ås 3	0	0	0	0	0	0	0	0
-åst	0	0	0	0	-76	-76	76	76

Combined stress intensity :

- When åst = 0

å (comb.) = The larger of :
1) åct
2) ålt
3) ålt - åct

- When åst <> 0

å (comb.) = The larger of :
1) 0.5[ålt+åct+Sqr.((ålt-åct)^2+4(åst^2))]
2) 0.5[ålt+åct-Sqr.((ålt-åct)^2+4(åst^2))]
3) Sqr.((ålt-åct)^2+4(åst^2)))

Stresses	Au	Al	Bu	Bl	Cu	Cl	Du	Dl
-ås (comb.)	20706	-19947	-20515	19856	233	233	233	233

****

PRESSURE VESSEL DESIGN PRO CORP.
HOUSTON TX

****

--- COMPUTATION OF LOCAL STRESSES ---

CUSTOMER NAME : FMC CORP.

P.O. NO. : 9353001

ITEM NO. : F#1-EAST S/O NO. : .250

DESIGNER NAME : M.SCHULTZ DATE : 12-19-1994

****

--- Stresses in Cylindrical Shell ---

Attachment Mk. :JT1LD6

M.A.W.P. : 2 psi.
Des. temp. : 100 deg. F

Vessel

Cyl. ID. : 71.5 in. Cyl. mean rad. : 35.875 in. (corr.)
Cyl. thk. : .25 in. (.25 in. (corr.))
Material : SA 36
Allow. stress : 12700 psi.

Attachment

Shape : Rectangular
Cl : 7.75 in.
Cc : .1875 in.

Loads & Moments

Radial load P : 0 lb.
Shear load Vc : 0 lb.
Shear load Vl : 880 lb.
Moment Mc : 0 in.-lb.
Moment Ml :-19400 in.-lb.
Moment Mt : 4900 in.-lb.

Stress coefficient factors

Kn : 1	Kb : 1	Iv : 1	
C1a : 22.80354	C1b : 24.10236	C2a : .2000007	C2b : .1472699
C3 : 8.754589E-02	C4 : .1	C5 : 11.99788	C6 : 1.950315E-02
L1a : 24.18951	L1b : 25.62597	L2a : .1442487	L2b : .1043262
L3 : .6710563	L4 : .06	L5 : .3234119	L6 : .0544575
K1(Nf) : .91	K1(Nx) : 1.68	K1(Mf) : 1.76	K1(Mx) : 1.2
K2(Nf) : 1.48	K2(Nx) : 1.2	K2(Mf) : .88	K2(Mx) : 1.25
Kc(é) : .9744348	Kc(Mf) : 1.220256	Kc(Mx) : 1.531245	
Cc(Nf) : .09	Cc(Nx) : .44		

Kl(é) : 1.396394 Kl(Mf) : 2.051188 Kl(Mx) : 1.19129
Cl(Nf) : .8 Cl(Nx) : .07

Item no. : F#1-EAST S/o no. : .250

****

Geometric parameters

Gamma = Rm/T = 35.875 / .25
= 143.5

á1x = Cc/Rm = .1875 / 35.875 = 5.226481E-03
á2x = Cl/Rm = 7.75 / 35.875 = .2160279
áx = á1x/á2x = 5.226481E-03 / .2160279 = 2.419355E-02

á1 : .0545863 á2 : 2.835539E-02 á3 : 1.807074E-02
á4 : 2.205094E-02 á5 : 6.248028E-02 á6 : .1281588

Circumferential stresses :

Membrane due to P (åc1) = Kn(C1x)(P/(Rm(T)))
= 1 (C1x) (0 / (35.875 (.25)))
= 0 psi. (0 psi.)

Bending due to P (åc2) = Kb(C2x)(6(P)/(T^2))
= 1 (C2x) (6 (0) / (.25 ^ 2))
= 0 psi. (0 psi.)

Membrane due to Mc (åc3) = Kn(C3)(Mc/((Rm^2)(á)(T)))
= 1 (8.754589E-02) (0 / ((35.875 ^ 2) (1.807074E-02) (.25)))
= 0 psi.

Bending due to Mc (åc4) = Kb(C4)(6(Mc)/((T^2)(Rm)(á)))
= 1 (.1) (6 (0) / ((.25 ^ 2) (35.875) (2.205094E-02)))
= 0 psi.

Membrane due to Ml (åc5) = Kn(C5)(Ml/((Rm^2)(á)(T)))
= 1 (11.99788) (-19400 / ((35.875 ^ 2) (6.248028E-02) (.25)))
=-11579 psi.

Bending due to Ml (åc6) = Kb(C6)(6(Ml)/((T^2)(Rm)(á)))
= 1 (1.950315E-02) (6 (-19400) / ((.25 ^ 2) (35.875) (.1281588)))
=-7901 psi.

Press. stress (åc7) = Dp(Rm)(Iv)/(T)
= 2 (35.875) (1) / (.25)
= 287 psi.

Stresses	Au	Al	Bu	Bl	Cu	Cl	Du	Dl
-åc 1	0	0	0	0	0	0	0	0
-åc 2	0	0	0	0	0	0	0	0
-åc 3	0	0	0	0	0	0	0	0
-åc 4	0	0	0	0	0	0	0	0
-åc 5	11579	11579	-11579	-11579	0	0	0	0
-åc 6	7901	-7901	-7901	7901	0	0	0	0
-åc	19480	3678	-19480	-3678	0	0	0	0
-åp	287	287	287	287	287	287	287	287

$S_m = 11,579 + 287 = 11,866 < (1.1)(12700) = 13,970$

-act	19767	3965	-19193	-3391	287	287	287	287

Item no. : F#1-EAST S/o no. : .250

****

Geometric parameters

Gamma = 143.5

áx1 : 5.226481E-03
áx2 : .2160279
áx : 2.419355E-02

á1 : 4.234521E-02 á2 : 4.453111E-02 á3 : 1.807074E-02
á4 : 2.767074E-02 á5 : 6.248028E-02 á6 : 7.443215E-02

Longitudinal stresses :

Membrane due to P (ål1) = Kn(L1x)(P/(Rm(T)))
= 1 (L1x) (0 / (35.875 (.25)))
= 0 psi. (0 psi.)

Bending due to P (ål2) = Kb(L2x)(6(P)/(T^2))
= 1 (L2x) (6 (0) / (.25 ^ 2))
= 0 psi. (0 psi.)

Membrane due to Mc (ål3) = Kn(L3)(Mc/((Rm^2)(á)(T)))
= 1 (.6710563) (0 / ((35.875 ^ 2) (1.807074E-02) (.25)))
= 0 psi.

Bending due to Mc (ål4) = Kb(L4)(6(Mc)/((T^2)(Rm)(á)))
= 1 (.06) (6 (0) / ((.25 ^ 2) (35.875) (2.767074E-02)))
= 0 psi.

Membrane due to Ml (ål5) = Kn(L5)(Ml/((Rm^2)(á)(T)))
= 1 (.3234119) (-19400 / ((35.875 ^ 2) (6.248028E-02) (.25)))
=-313 psi.

Bending due to Ml (ål6) = Kb(L6)(6(Ml)/((T^2)(Rm)(á)))
= 1 (.0544575) (6 (-19400) / ((.25 ^ 2) (35.875) (7.443215E-02)))
=-37983 psi.

Press. stress (ål7) = Dp(Rm)(Iv)/(2(T))
= 2 (35.875) (1) / (2 (.25))
= 144 psi.

Stresses	Au	Al	Bu	Bl	Cu	Cl	Du	Dl
-ål 1	0	0	0	0	0	0	0	0
-ål 2	0	0	0	0	0	0	0	0
-ål 3	0	0	0	0	0	0	0	0
-ål 4	0	0	0	0	0	0	0	0
-ål 5	313	313	-313	-313	0	0	0	0
ål 6	37983	-37983	-37983	37983	0	0	0	0
-ål	38296	-37670	-38296	37670	0	0	0	0
-åp	144	144	144	144	144	144	144	144

$S_s = 38296 + 144 = 38{,}440 \approx (3)\,12{,}700 = 38{,}100$

-ålt	38440	-37526	-38152	37814	144	144	144	144

Item no. : F#1-EAST S/o no. : .250

****

Shear stresses :

Shear due to Vl (ås1) = Vl/(4(Cl)(T))
= 880 / (4 (7.75) (.25))
= 114 psi.

Shear due to Vc (ås2) = Vc/(4(Cc)(T))
= 0 / (4 (.1875) (.25))
= 0 psi.

Shear due to Mt (ås3) = 0 psi.

Stresses	Au	Al	Bu	Bl	Cu	Cl	Du	Dl
-ås 1	0	0	0	0	-114	-114	114	114
-ås 2	0	0	0	0	0	0	0	0
-ås 3	0	0	0	0	0	0	0	0
-åst	0	0	0	0	-114	-114	114	114

Combined stress intensity :

- When åst = 0

å (comb.) = The larger of :
1) åct
2) ålt
3) ålt - åct

- When åst <> 0

å (comb.) = The larger of :
1) 0.5[ålt+åct+Sqr.((ålt-åct)^2+4(åst^2))]
2) 0.5[ålt+åct-Sqr.((ålt-åct)^2+4(åst^2))]
3) Sqr.((ålt-åct)^2+4(åst^2)))

Stresses	Au	Al	Bu	Bl	Cu	Cl	Du	Dl
-ås (comb.)	38440	-41492	-38153	41205	350	350	350	350

STEARNS-ROGER DIV.¶ TRANSFORMATION OF COORDINATES PROGRAM

DATE 12-14-1994
TIME 08:52:01

VERTICAL VESSEL

FURNACE #1- EAST POT - 2ND PASS
JOINT #1, LOAD #8
(DL+SEISMIC) $S_A = 1.1S_m$ $\leq 3.0S_m$

NOZZLE ORIENTATION = 14.17 DEG

PIPING LOADS :

FXO =	-170.00 LBS	MXO =	1937.50 FT-LBS	23,250/12
FYO =	1020.00 LBS	MYO =	111.67 FT-LBS	1,340/12
FZO =	-210.00 LBS	MZO =	0.83 FT-LBS	10/12

TRANSLATION OF ROTATED LOADS = 0.00 IN

SECONDARY ROTATION AROUND HORIZONTAL = 0.00 DEG

ROTATED AND/OR TRANSLATED LOADS :

P (Z) =	0.16 KIPS	MC(Y) =	1.34	IN-KIPS
VC(X) =	0.22 KIPS	ML(X) =	-22.55	IN-KIPS
VL(Y) =	1.02 KIPS	MT(Z) =	5.68	IN-KIPS

****

PRESSURE VESSEL DESIGN PRO CORP.
HOUSTON TX

****

--- COMPUTATION OF LOCAL STRESSES ---

CUSTOMER NAME : FMC CORP.

P.O. NO. : 9353001

ITEM NO. : F#1-EAST S/O NO. : .375

DESIGNER NAME : M.SCHULTZ DATE : 12-19-1994

****

--- Stresses in Cylindrical Shell ---

Attachment Mk. : JT1LD8

M.A.W.P. : 2 psi.
Des. temp. : 100 deg. F

Vessel

Cyl. ID. : 71.25 in. Cyl. mean rad. : 35.8125 in. (corr.)
Cyl. thk. : .375 in. (.375 in. (corr.))
Material : SA 36
Allow. stress : 12700 psi.

Attachment

Shape : Rectangular
Cl : 7.75 in.
Cc : .1875 in.

Loads & Moments

Radial load P : 160 lb.
Shear load Vc : 220 lb.
Shear load Vl : 1020 lb.
Moment Mc : 1340 in.-lb.
Moment Ml :-22550 in.-lb.
Moment Mt : 5680 in.-lb.

Stress coefficient factors

Kn : 1	Kb : 1	Iv : 1	
C1a : 16.4399	C1b : 16.78083	C2a : .218978	C2b : .1604909
C3 : 7.754372E-02	C4 : .1009	C5 : 7.252811	C6 : 2.568189E-02
L1a : 17.85809	L1b : 17.25823	L2a : .1679735	L2b : .1235527
L3 : .3252309	L4 : .06	L5 : .6576346	L6 : 6.549262E-02
K1(Nf) : .91	K1(Nx) : 1.68	K1(Mf) : 1.76	K1(Mx) : 1.2
K2(Nf) : 1.48	K2(Nx) : 1.2	K2(Mf) : .88	K2(Mx) : 1.25
Kc(é) : 1.005836	Kc(Mf) : 1.278839	Kc(Mx) : 1.646668	
Cc(Nf) : .15	Cc(Nx) : .44		

Kl(é) : 1.334016 Kl(Mf) : 2.069142 Kl(Mx) : 1.198229
Cl(Nf) : .77 Cl(Nx) : .24

Item no. : F#1-EAST S/o no. : .375

****

eometric parameters

Gamma = Rm/T = 35.8125 / .375
= 95.5

á1x = Cc/Rm = .1875 / 35.8125 = 5.235602E-03
á2x = Cl/Rm = 7.75 / 35.8125 = .2164049
áx = á1x/á2x = 5.235602E-03 / .2164049 = 2.419355E-02

á1 : 5.468157E-02 á2 : 2.840488E-02 á3 : 1.810228E-02
á4 : .0231499 á5 : 6.258932E-02 á6 : .1295062

Circumferential stresses :

Membrane due to P (åc1) = Kn(C1x)(P/(Rm(T)))
= 1 (C1x) (160 / (35.8125 (.375)))
= 196 psi. (200 psi.)

Bending due to P (åc2) = Kb(C2x)(6(P)/(T^2))
= 1 (C2x) (6 (160) / (.375 ^ 2))
= 1495 psi. (1096 psi.)

Membrane due to Mc (åc3) = Kn(C3)(Mc/((Rm^2)(á)(T)))
= 1 (7.754372E-02) (1340 / ((35.8125 ^ 2) (1.810228E-02) (.375)))
= 12 psi.

Bending due to Mc (åc4) = Kb(C4)(6(Mc)/((T^2)(Rm)(á)))
= 1 (.1009) (6 (1340) / ((.375 ^ 2) (35.8125) (.0231499)))
= 6958 psi.

Membrane due to Ml (åc5) = Kn(C5)(Ml/((Rm^2)(á)(T)))
= 1 (7.252811) (-22550 / ((35.8125 ^ 2) (6.258932E-02) (.375)))
=-5434 psi.

Bending due to Ml (åc6) = Kb(C6)(6(Ml)/((T^2)(Rm)(á)))
= 1 (2.568189E-02) (6 (-22550) / ((.375 ^ 2) (35.8125) (.1295062)))
=-5329 psi.

Press. stress (åc7) = Dp(Rm)(Iv)/(T)
= 2 (35.8125) (1) / (.375)
= 191 psi.

Stresses	Au	Al	Bu	Bl	Cu	Cl	Du	Dl
-åc 1	-200	-200	-200	-200	-196	-196	-196	-196
-åc 2	-1096	1096	-1096	1096	-1495	1495	-1495	1495
-åc 3	0	0	0	0	-12	-12	12	12
-åc 4	0	0	0	0	-6958	6958	6958	-6958
-åc 5	5434	5434	-5434	-5434	0	0	0	0
-åc 6	5329	-5329	-5329	5329	0	0	0	0
-åc	9467	1001	-12059	791	-8661	8245	5279	-5647
-åp	191	191	191	191	191	191	191	191

-åct	9658	1192	-11868	982	-8470	8436	5470	-5456

Item no. : F#1-EAST S/o no. : .375

****

Geometric parameters

Gamma = 95.5

áx1 : 5.235602E-03
áx2 : .2164049
áx : 2.419355E-02

á1 : 4.241911E-02 á2 : 4.460884E-02 á3 : 1.810228E-02
á4 : 2.980845E-02 á5 : 6.258932E-02 á6 : 7.499635E-02

Longitudinal stresses :

Membrane due to P (ål1) = Kn(L1x)(P/(Rm(T)))
= 1 (L1x) (160 / (35.8125 (.375)))
= 213 psi. (206 psi.)

Bending due to P (ål2) = Kb(L2x)(6(P)/(T^2))
= 1 (L2x) (6 (160) / (.375 ^ 2))
= 1147 psi. (843 psi.)

Membrane due to Mc (ål3) = Kn(L3)(Mc/((Rm^2)(á)(T)))
= 1 (.3252309) (1340 / ((35.8125 ^ 2) (1.810228E-02) (.375)))
= 50 psi.

Bending due to Mc (ål4) = Kb(L4)(6(Mc)/((T^2)(Rm)(á)))
= 1 (.06) (6 (1340) / ((.375 ^ 2) (35.8125) (2.980845E-02)))
= 3213 psi.

Membrane due to Ml (ål5) = Kn(L5)(Ml/((Rm^2)(á)(T)))
= 1 (.6576346) (-22550 / ((35.8125 ^ 2) (6.258932E-02) (.375)))
=-494 psi.

Bending due to Ml (ål6) = Kb(L6)(6(Ml)/((T^2)(Rm)(á)))
= 1 (6.549262E-02) (6 (-22550) / ((.375 ^ 2) (35.8125) (7.499635E-02)))
=-23462 psi.

Press. stress (ål7) = Dp(Rm)(Iv)/(2(T))
= 2 (35.8125) (1) / (2 (.375))
= 96 psi.

Stresses	Au	Al	Bu	Bl	Cu	Cl	Du	Dl
-ål 1	-213	-213	-213	-213	-206	-206	-206	-206
-ål 2	-1147	1147	-1147	1147	-843	843	-843	843
-ål 3	0	0	0	0	-50	-50	50	50
-ål 4	0	0	0	0	-3213	3213	3213	-3213
-ål 5	494	494	-494	-494	0	0	0	0
-ål 6	23462	-23462	-23462	23462	0	0	0	0
-ål	22596	-22034	-25316	23902	-4312	3800	2214	-2526
-åp	96	96	96	96	96	96	96	96

-ålt	22692	-21938	-25220	23998	-4216	3896	2310	-2430

Item no. : F#1-EAST S/o no. : .375

****

Shear stresses :

Shear due to Vl (ås1) = Vl/(4(Cl)(T))
= 1020 / (4 (7.75) (.375))
= 88 psi.

Shear due to Vc (ås2) = Vc/(4(Cc)(T))
= 220 / (4 (.1875) (.375))
= 782 psi.

Shear due to Mt (ås3) = 0 psi.

Stresses	Au	Al	Bu	Bl	Cu	Cl	Du	Dl
-ås 1	0	0	0	0	-88	-88	88	88
-ås 2	782	782	-782	-782	0	0	0	0
-ås 3	0	0	0	0	0	0	0	0
-åst	782	782	-782	-782	-88	-88	88	88

Combined stress intensity :

- When åst = 0

å (comb.) = The larger of :
1) åct
2) ålt
3) ålt - åct

- When åst <> 0

å (comb.) = The larger of :
1) 0.5[ålt+åct+Sqr.((ålt-åct)^2+4(åst^2))]
2) 0.5[ålt+åct-Sqr.((ålt-åct)^2+4(åst^2))]
3) Sqr.((ålt-åct)^2+4(åst^2)))

Stresses	Au	Al	Bu	Bl	Cu	Cl	Du	Dl
-ås (comb.)	22739	23183	-25267	24025	-8473	8438	5472	-5460

****

PRESSURE VESSEL DESIGN PRO CORP.
HOUSTON TX

****

--- COMPUTATION OF LOCAL STRESSES ---

CUSTOMER NAME : FMC CORP.

P.O. NO. : 9353001

ITEM NO. : F#1-EAST S/O NO. : .290

DESIGNER NAME : M.SCHULTZ DATE : 12-19-1994

****

--- Stresses in Cylindrical Shell ---

Attachment Mk. : JT1LD8

M.A.W.P. : 2 psi.
Des. temp. : 100 deg. F

Vessel

Cyl. ID. : 71.42 in. Cyl. mean rad. : 35.855 in. (corr.)
Cyl. thk. : .29 in. (.29 in. (corr.))
Material : SA 36
Allow. stress : 12700 psi.

Attachment

Shape : Rectangular
Cl : 7.75 in.
Cc : .1875 in.

Loads & Moments

Radial load P : 160 lb.
Shear load Vc : 220 lb.
Shear load Vl : 1020 lb.
Moment Mc : 1340 in.-lb.
Moment Ml :-22550 in.-lb.
Moment Mt : 5680 in.-lb.

Stress coefficient factors

Kn : 1	Kb : 1	Iv : 1	
C1a : 20.28941	C1b : 21.10213	C2a : .2078744	C2b : .151832
C3 : 7.031596E-02	C4 : .1	C5 : 10.16516	C6 : 2.191402E-02
L1a : 21.71166	L1b : 22.14284	L2a : .1543033	L2b : .1118637
L3 : .5245329	L4 : .06	L5 : .2693445	L6 : 5.919533E-02
K1(Nf) : .91	K1(Nx) : 1.68	K1(Mf) : 1.76	K1(Mx) : 1.2
K2(Nf) : 1.48	K2(Nx) : 1.2	K2(Mf) : .88	K2(Mx) : 1.25
Kc(é) : .9847822	Kc(Mf) : 1.242233	Kc(Mx) : 1.572507	
Cc(Nf) : .09	Cc(Nx) : .44		

Kl(é) : 1.371823 Kl(Mf) : 2.055064 Kl(Mx) : 1.19129
Cl(Mf) : .8 Cl(Mx) : .07

Item no. : F#1-EAST S/o no. : .290

****

Geometric parameters

Gamma = Rm/T = 35.855 / .29
= 123.6379

á1x = Cc/Rm = .1875 / 35.855 = 5.229396E-03
á2x = Cl/Rm = 7.75 / 35.855 = .2161484
áx = á1x/á2x = 5.229396E-03 / .2161484 = 2.419355E-02

á1 : 5.461674E-02 á2 : .0283712 á3 : 1.808082E-02
á4 : 2.246059E-02 á5 : 6.251513E-02 á6 : .1284726

Circumferential stresses :

Membrane due to P (åc1) = Kn(C1x)(P/(Rm(T)))
= 1 (C1x) (160 / (35.855 (.29)))
= 312 psi. (325 psi.)

Bending due to P (åc2) = Kb(C2x)(6(P)/(T^2))
= 1 (C2x) (6 (160) / (.29 ^ 2))
= 2373 psi. (1733 psi.)

Membrane due to Mc (åc3) = Kn(C3)(Mc/((Rm^2)(á)(T)))
= 1 (7.031596E-02) (1340 / ((35.855 ^ 2) (1.808082E-02) (.29)))
= 14 psi.

Bending due to Mc (åc4) = Kb(C4)(6(Mc)/((T^2)(Rm)(á)))
= 1 (.1) (6 (1340) / ((.29 ^ 2) (35.855) (2.246059E-02)))
= 11871 psi.

Membrane due to Ml (åc5) = Kn(C5)(Ml/((Rm^2)(á)(T)))
= 1 (10.16516) (-22550 / ((35.855 ^ 2) (6.251513E-02) (.29)))
=-9836 psi.

Bending due to Ml (åc6) = Kb(C6)(6(Ml)/((T^2)(Rm)(á)))
= 1 (2.191402E-02) (6 (-22550) / ((.29 ^ 2) (35.855) (.1284726)))
=-7655 psi.

Press. stress (åc7) = Dp(Rm)(Iv)/(T)
= 2 (35.855) (1) / (.29)
= 247 psi.

Stresses	Au	Al	Bu	Bl	Cu	Cl	Du	Dl
-åc 1	-325	-325	-325	-325	-312	-312	-312	-312
-åc 2	-1733	1733	-1733	1733	-2373	2373	-2373	2373
-åc 3	0	0	0	0	-14	-14	14	14
-åc 4	0	0	0	0	-11871	11871	11871	-11871
åc 5	9836	9836	-9836	-9836	0	0	0	0
-åc 6	7655	-7655	-7655	7655	0	0	0	0
-åc	15433	3589	-19549	-773	-14570	13918	9200	-9796
-åp	247	247	247	247	247	247	247	247

-âct	15680	3836	-19302	-526	-14323	14165	9447	-9549

Item no. : F#1-EAST S/o no. : .290

****

Geometric parameters

Gamma = 123.6379

áx1 : 5.229396E-03
áx2 : .2161484
áx : 2.419355E-02

á1 : 4.236882E-02 á2 : 4.455595E-02 á3 : 1.808082E-02
á4 : 2.843222E-02 á5 : 6.251513E-02 á6 : 7.447368E-02

Longitudinal stresses :

Membrane due to P (ål1) = Kn(L1x)(P/(Rm(T)))
= 1 (L1x) (160 / (35.855 (.29)))
= 334 psi. (341 psi.)

Bending due to P (ål2) = Kb(L2x)(6(P)/(T^2))
= 1 (L2x) (6 (160) / (.29 ^ 2))
= 1761 psi. (1277 psi.)

Membrane due to Mc (ål3) = Kn(L3)(Mc/((Rm^2)(á)(T)))
= 1 (.5245329) (1340 / ((35.855 ^ 2) (1.808082E-02) (.29)))
= 104 psi.

Bending due to Mc (ål4) = Kb(L4)(6(Mc)/((T^2)(Rm)(á)))
= 1 (.06) (6 (1340) / ((.29 ^ 2) (35.855) (2.843222E-02)))
= 5627 psi.

Membrane due to Ml (ål5) = Kn(L5)(Ml/((Rm^2)(á)(T)))
= 1 (.2693445) (-22550 / ((35.855 ^ 2) (6.251513E-02) (.29)))
=-262 psi.

Bending due to Ml (ål6) = Kb(L6)(6(Ml)/((T^2)(Rm)(á)))
= 1 (5.919533E-02) (6 (-22550) / ((.29 ^ 2) (35.855) (7.447368E-02)))
=-35666 psi.

Press. stress (ål7) = Dp(Rm)(Iv)/(2(T))
= 2 (35.855) (1) / (2 (.29))
= 124 psi.

Stresses	Au	Al	Bu	Bl	Cu	Cl	Du	Dl
-ål 1	-334	-334	-334	-334	-341	-341	-341	-341
-ål 2	-1761	1761	-1761	1761	-1277	1277	-1277	1277
-ål 3	0	0	0	0	-104	-104	104	104
-ål 4	0	0	0	0	-5627	5627	5627	-5627
-ål 5	262	262	-262	-262	0	0	0	0
-ål 6	35666	-35666	-35666	35666	0	0	0	0
-ål	33833	-33977	-38023	36831	-7349	6459	4113	-4587
-åp	124	124	124	124	124	124	124	124

-ålt	33957	-33853	-37899	36955	-7225	6583	4237	-4463

Item no. : F#1-EAST S/o no. : .290

****

Shear stresses :

Shear due to Vl (ås1) = Vl/(4(Cl)(T))
= 1020 / (4 (7.75) (.29))
= 113 psi.

Shear due to Vc (ås2) = Vc/(4(Cc)(T))
= 220 / (4 (.1875) (.29))
= 1011 psi.

Shear due to Mt (ås3) = 0 psi.

Stresses	Au	Al	Bu	Bl	Cu	Cl	Du	Dl
-ås 1	0	0	0	0	-113	-113	113	113
-ås 2	1011	1011	-1011	-1011	0	0	0	0
-ås 3	0	0	0	0	0	0	0	0
-åst	1011	1011	-1011	-1011	-113	-113	113	113

Combined stress intensity :

- When åst = 0

å (comb.) = The larger of :
1) åct
2) ålt
3) ålt - åct

- When åst <> 0

å (comb.) = The larger of :
1) 0.5[ålt+åct+Sqr.((ålt-åct)^2+4(åst^2))]
2) 0.5[ålt+åct-Sqr.((ålt-åct)^2+4(åst^2))]
3) Sqr.((ålt-åct)^2+4(åst^2)))

Stresses	Au	Al	Bu	Bl	Cu	Cl	Du	Dl
-ås (comb.)	34013	37743	-37955	37535	-14326	14167	9449	-9553

STEARNS-ROGER DIV.¶ TRANSFORMATION OF COORDINATES PROGRAM

DATE 12-14-1994
TIME 08:58:23

VERTICAL VESSEL

FURNACE #1 - EAST POT - 2ND PASS
JOINT #6, LOAD #7
(DL + SEISMIC) $S_A = 1.1 S_m$ & $3.0 S_m$

NOZZLE ORIENTATION = 338.51 DEG

PIPING LOADS :

FXO =	150.00 LBS	MXO =	1519.16 FT-LBS
FYO =	760.00 LBS	MYO =	-102.50 FT-LBS
FZO =	-210.00 LBS	MZO =	0.00 FT-LBS

TRANSLATION OF ROTATED LOADS = 0.00 IN

SECONDARY ROTATION AROUND HORIZONTAL = 0.00 DEG

ROTATED AND/OR TRANSLATED LOADS :

P (Z) =	0.14 KIPS	MC(Y) =	-1.23 IN-KIPS
VC(X) =	-0.22 KIPS	ML(X) =	-16.96 IN-KIPS
VL(Y) =	0.76 KIPS	MT(Z) =	-6.68 IN-KIPS

****

PRESSURE VESSEL DESIGN PRO CORP.
HOUSTON TX

****

--- COMPUTATION OF LOCAL STRESSES ---

CUSTOMER NAME : FMC CORP.

P.O. NO. : 9353001

ITEM NO. : F#1-EAST S/O NO. : .375

DESIGNER NAME : M.SCHULTZ DATE : 12-19-1994

****

--- Stresses in Cylindrical Shell ---

Attachment Mk. : JT6LD7

M.A.W.P. : 2 psi.
Des. temp. : 100 deg. F

Vessel

Cyl. ID. : 71.25 in. Cyl. mean rad. : 35.8125 in. (corr.)
Cyl. thk. : .375 in. (.375 in. (corr.))
Material : SA 36
Allow. stress : 12700 psi.

Attachment

Shape : Rectangular
Cl : 7.75 in.
Cc : .1875 in.

Loads & Moments

Radial load P : 140 lb.
Shear load Vc :-220 lb.
Shear load Vl : 760 lb.
Moment Mc :-1230 in.-lb.
Moment Ml :-16960 in.-lb.
Moment Mt :-6680 in.-lb.

Stress coefficient factors

Kn : 1	Kb : 1	Iv : 1	
C1a : 16.4399	C1b : 16.78083	C2a : .218978	C2b : .1604909
C3 : 7.754372E-02	C4 : .1009	C5 : 7.252811	C6 : 2.568189E-02
L1a : 17.85809	L1b : 17.25823	L2a : .1679735	L2b : .1235527
L3 : .3252309	L4 : .06	L5 : .6576346	L6 : 6.549262E-02
K1(Nf) : .91	K1(Nx) : 1.68	K1(Mf) : 1.76	K1(Mx) : 1.2
K2(Nf) : 1.48	K2(Nx) : 1.2	K2(Mf) : .88	K2(Mx) : 1.25
Kc(é) : 1.005836	Kc(Mf) : 1.278839	Kc(Mx) : 1.646668	
Cc(Nf) : .15	Cc(Nx) : .44		

Kl(é) : 1.334016 Kl(Mf) : 2.069142 Kl(Mx) : 1.198229
Cl(Nf) : .77 Cl(Nx) : .24

Item no. : F#1-EAST S/o no. : .375

****

Geometric parameters

Gamma = Rm/T = 35.8125 / .375
= 95.5

á1x = Cc/Rm = .1875 / 35.8125 = 5.235602E-03
á2x = Cl/Rm = 7.75 / 35.8125 = .2164049
áx = á1x/á2x = 5.235602E-03 / .2164049 = 2.419355E-02

á1 : 5.468157E-02 á2 : 2.840488E-02 á3 : 1.810228E-02
á4 : .0231499 á5 : 6.258932E-02 á6 : .1295062

Circumferential stresses :

Membrane due to P (åc1) = Kn(C1x)(P/(Rm(T)))
= 1 (C1x) (140 / (35.8125 (.375)))
= 171 psi. (175 psi.)

Bending due to P (åc2) = Kb(C2x)(6(P)/(T^2))
= 1 (C2x) (6 (140) / (.375 ^ 2))
= 1308 psi. (959 psi.)

Membrane due to Mc (åc3) = Kn(C3)(Mc/((Rm^2)(á)(T)))
= 1 (7.754372E-02) (-1230 / ((35.8125 ^ 2) (1.810228E-02) (.375)))
=-12 psi.

Bending due to Mc (åc4) = Kb(C4)(6(Mc)/((T^2)(Rm)(á)))
= 1 (.1009) (6 (-1230) / ((.375 ^ 2) (35.8125) (.0231499)))
=-6388 psi.

Membrane due to Ml (åc5) = Kn(C5)(Ml/((Rm^2)(á)(T)))
= 1 (7.252811) (-16960 / ((35.8125 ^ 2) (6.258932E-02) (.375)))
=-4087 psi.

Bending due to Ml (åc6) = Kb(C6)(6(Ml)/((T^2)(Rm)(á)))
= 1 (2.568189E-02) (6 (-16960) / ((.375 ^ 2) (35.8125) (.1295062)))
=-4008 psi.

Press. stress (åc7) = Dp(Rm)(Iv)/(T)
= 2 (35.8125) (1) / (.375)
= 191 psi.

Stresses	Au	Al	Bu	Bl	Cu	Cl	Du	Dl
-åc 1	-175	-175	-175	-175	-171	-171	-171	-171
-åc 2	-959	959	-959	959	-1308	1308	-1308	1308
-åc 3	0	0	0	0	12	12	-12	-12
-åc 4	0	0	0	0	6388	-6388	-6388	6388
-åc 5	4087	4087	-4087	-4087	0	0	0	0
-åc 6	4008	-4008	-4008	4008	0	0	0	0
-åc	6961	863	-9229	705	4921	-5239	-7879	7513
-åp	191	191	191	191	191	191	191	191

-åct	7152	1054	-9038	896	5112	-5048	-7688	7704

Item no. : F#1-EAST S/o no. : .375

****

Geometric parameters

Gamma = 95.5

áx1 : 5.235602E-03
áx2 : .2164049
áx : 2.419355E-02

á1 : 4.241911E-02 á2 : 4.460884E-02 á3 : 1.810228E-02
á4 : 2.980845E-02 á5 : 6.258932E-02 á6 : 7.499635E-02

Longitudinal stresses :

Membrane due to P (ål1) = Kn(L1x)(P/(Rm(T)))
= 1 (L1x) (140 / (35.8125 (.375)))
= 186 psi. (180 psi.)

Bending due to P (ål2) = Kb(L2x)(6(P)/(T^2))
= 1 (L2x) (6 (140) / (.375 ^ 2))
= 1003 psi. (738 psi.)

Membrane due to Mc (ål3) = Kn(L3)(Mc/((Rm^2)(á)(T)))
= 1 (.3252309) (-1230 / ((35.8125 ^ 2) (1.810228E-02) (.375)))
=-47 psi.

Bending due to Mc (ål4) = Kb(L4)(6(Mc)/((T^2)(Rm)(á)))
= 1 (.06) (6 (-1230) / ((.375 ^ 2) (35.8125) (2.980845E-02)))
=-2951 psi.

Membrane due to Ml (ål5) = Kn(L5)(Ml/((Rm^2)(á)(T)))
= 1 (.6576346) (-16960 / ((35.8125 ^ 2) (6.258932E-02) (.375)))
=-372 psi.

Bending due to Ml (ål6) = Kb(L6)(6(Ml)/((T^2)(Rm)(á)))
= 1 (6.549262E-02) (6 (-16960) / ((.375 ^ 2) (35.8125) (7.499635E-02)))
=-17646 psi.

Press. stress (ål7) = Dp(Rm)(Iv)/(2(T))
= 2 (35.8125) (1) / (2 (.375))
= 96 psi.

Stresses	Au	Al	Bu	Bl	Cu	Cl	Du	Dl
-ål 1	-186	-186	-186	-186	-180	-180	-180	-180
-ål 2	-1003	1003	-1003	1003	-738	738	-738	738
-ål 3	0	0	0	0	47	47	-47	-47
-ål 4	0	0	0	0	2951	-2951	-2951	2951
-ål 5	372	372	-372	-372	0	0	0	0
-ål 6	17646	-17646	-17646	17646	0	0	0	0
-ål	16829	-16457	-19207	18091	2080	-2346	-3916	3462
-åp	96	96	96	96	96	96	96	96

-ålt	16925	-16361	-19111	18187	2176	-2250	-3820	3558

Item no. : F#1-EAST S/o no. : .375

****

Shear stresses :

Shear due to Vl (ås1) = Vl/(4(Cl)(T))
= 760 / (4 (7.75) (.375))
= 65 psi.

Shear due to Vc (ås2) = Vc/(4(Cc)(T))
=-220 / (4 (.1875) (.375))
=-783 psi.

Shear due to Mt (ås3) = 0 psi.

Stresses	Au	Al	Bu	Bl	Cu	Cl	Du	Dl
-ås 1	0	0	0	0	-65	-65	65	65
-ås 2	-783	-783	783	783	0	0	0	0
-ås 3	0	0	0	0	0	0	0	0
-åst	-783	-783	783	783	-65	-65	65	65

Combined stress intensity :

- When åst = 0

å (comb.) = The larger of :
1) åct
2) ålt
3) ålt - åct

- When åst <> 0

å (comb.) = The larger of :
1) 0.5[ålt+åct+Sqr.((ålt-åct)^2+4(åst^2))]
2) 0.5[ålt+åct-Sqr.((ålt-åct)^2+4(åst^2))]
3) Sqr.((ålt-åct)^2+4(åst^2)))

Stresses	Au	Al	Bu	Bl	Cu	Cl	Du	Dl
-ås (comb.)	16987	17485	-19172	18222	5113	-5051	-7690	7705

****

PRESSURE VESSEL DESIGN PRO CORP.
HOUSTON TX

****

--- COMPUTATION OF LOCAL STRESSES ---

CUSTOMER NAME : FMC CORP.

P.O. NO. : 9353001

ITEM NO. : F#1-EAST S/O NO. : .240

DESIGNER NAME : M.SCHULTZ DATE : 12-19-1994

****

--- Stresses in Cylindrical Shell ---

Attachment Mk. : JT6LD7

M.A.W.P. : 2 psi.
Des. temp. : 100 deg. F

Vessel

Cyl. ID. : 71.52 in. Cyl. mean rad. : 35.88 in. (corr.)
Cyl. thk. : .24 in. (.24 in. (corr.))
Material : SA 36
Allow. stress : 12700 psi.

Attachment

Shape : Rectangular
Cl : 7.75 in.
Cc : .1875 in.

Loads & Moments

Radial load P : 140 lb.
Shear load Vc :-220 lb.
Shear load Vl : 760 lb.
Moment Mc :-1230 in.-lb.
Moment Ml :-16960 in.-lb.
Moment Mt :-6680 in.-lb.

Stress coefficient factors

Kn : 1	Kb : 1	Iv : 1	
C1a : 23.56326	C1b : 25.00883	C2a : .1976185	C2b : .1458864
C3 : 9.274808E-02	C4 : .1	C5 : 12.55153	C6 : .0188458
L1a : 24.93766	L1b : 26.6784	L2a : .1412049	L2b : .1020461
L3 : .715303	L4 : .06	L5 : .3397461	L6 : 5.302475E-02
K1(Nf) : .91	K1(Nx) : 1.68	K1(Mf) : 1.76	K1(Mx) : 1.2
K2(Nf) : 1.48	K2(Nx) : 1.2	K2(Mf) : .88	K2(Mx) : 1.25
Kc(é) : .9713089	Kc(Mf) : 1.213618	Kc(Mx) : 1.518781	
Cc(Nf) : .09	Cc(Nx) : .44		

Kl(é) : 1.403817 Kl(Mí) : 2.050017 Kl(Mx) : 1.19129
Cl(Ní) : .8 Cl(Nx) : .07

Item no. : F#1-EAST S/o no. : .240

****

metric parameters

Gamma = Rm/T = 35.88 / .24
= 149.5

á1x = Cc/Rm = .1875 / 35.88 = 5.225753E-03
á2x = Cl/Rm = 7.75 / 35.88 = .2159978
áx = á1x/á2x = 5.225753E-03 / .2159978 = 2.419355E-02

á1 : .0545787 á2 : 2.835144E-02 á3 : 1.806823E-02
á4 : 2.192792E-02 á5 : 6.247158E-02 á6 : .1280678

Circumferential stresses :

Membrane due to P (åc1) = Kn(C1x)(P/(Rm(T)))
= 1 (C1x) (140 / (35.88 (.24)))
= 383 psi. (407 psi.)

Bending due to P (åc2) = Kb(C2x)(6(P)/(T^2))
= 1 (C2x) (6 (140) / (.24 ^ 2))
= 2882 psi. (2128 psi.)

Membrane due to Mc (åc3) = Kn(C3)(Mc/((Rm^2)(á)(T)))
= 1 (9.274808E-02) (-1230 / ((35.88 ^ 2) (1.806823E-02) (.24)))
=-21 psi.

Bending due to Mc (åc4) = Kb(C4)(6(Mc)/((T^2)(Rm)(á)))
= 1 (.1) (6 (-1230) / ((.24 ^ 2) (35.88) (2.192792E-02)))
=-16286 psi.

Membrane due to Ml (åc5) = Kn(C5)(Ml/((Rm^2)(á)(T)))
= 1 (12.55153) (-16960 / ((35.88 ^ 2) (6.247158E-02) (.24)))
=-11030 psi.

Bending due to Ml (åc6) = Kb(C6)(6(Ml)/((T^2)(Rm)(á)))
= 1 (.0188458) (6 (-16960) / ((.24 ^ 2) (35.88) (.1280678)))
=-7247 psi.

Press. stress (åc7) = Dp(Rm)(Iv)/(T)
= 2 (35.88) (1) / (.24)
= 299 psi.

Stresses	Au	Al	Bu	Bl	Cu	Cl	Du	Dl
-åc 1	-407	-407	-407	-407	-383	-383	-383	-383
-åc 2	-2128	2128	-2128	2128	-2882	2882	-2882	2882
-åc 3	0	0	0	0	21	21	-21	-21
-åc 4	0	0	0	0	16286	-16286	-16286	16286
-åc 5	11030	11030	-11030	-11030	0	0	0	0
-åc 6	7247	-7247	-7247	7247	0	0	0	0
-åc	15742	5504	-20812	-2062	13042	-13766	-19572	18764
-åp	299	299	299	299	299	299	299	299

-åct	16041	5803	-20513	-1763	13341	-13467	-19273	19063

Item no. : F#1-EAST S/o no. : .240

****

ometric parameters

Gamma = 149.5

áx1 : 5.225753E-03
áx2 : .2159978
áx : 2.419355E-02

á1 : 4.233932E-02 á2 : 4.452492E-02 á3 : 1.806823E-02
á4 : 2.744168E-02 á5 : 6.247158E-02 á6 : 7.442179E-02

Longitudinal stresses :

Membrane due to P (ål1) = Kn(L1x)(P/(Rm(T)))
= 1 (L1x) (140 / (35.88 (.24)))
= 405 psi. (434 psi.)

Bending due to P (ål2) = Kb(L2x)(6(P)/(T^2))
= 1 (L2x) (6 (140) / (.24 ^ 2))
= 2059 psi. (1488 psi.)

Membrane due to Mc (ål3) = Kn(L3)(Mc/((Rm^2)(á)(T)))
= 1 (.715303) (-1230 / ((35.88 ^ 2) (1.806823E-02) (.24)))
=-159 psi.

Bending due to Mc (ål4) = Kb(L4)(6(Mc)/((T^2)(Rm)(á)))
= 1 (.06) (6 (-1230) / ((.24 ^ 2) (35.88) (2.744168E-02)))
=-7809 psi.

Membrane due to Ml (ål5) = Kn(L5)(Ml/((Rm^2)(á)(T)))
= 1 (.3397461) (-16960 / ((35.88 ^ 2) (6.247158E-02) (.24)))
=-300 psi.

Bending due to Ml (ål6) = Kb(L6)(6(Ml)/((T^2)(Rm)(á)))
= 1 (5.302475E-02) (6 (-16960) / ((.24 ^ 2) (35.88) (7.442179E-02)))
=-35083 psi.

Press. stress (ål7) = Dp(Rm)(Iv)/(2(T))
= 2 (35.88) (1) / (2 (.24))
= 149 psi.

Stresses	Au	Al	Bu	Bl	Cu	Cl	Du	Dl
-ål 1	-405	-405	-405	-405	-434	-434	-434	-434
-ål 2	-2059	2059	-2059	2059	-1488	1488	-1488	1488
-ål 3	0	0	0	0	159	159	-159	-159
-ål 4	0	0	0	0	7809	-7809	-7809	7809
-ål 5	300	300	-300	-300	0	0	0	0
-ål 6	35083	-35083	-35083	35083	0	0	0	0
-ål	32919	-33129	-37847	36437	6046	-6596	-9890	8704
-åp	149	149	149	149	149	149	149	149

-ålt	33068	-32980	-37698	36586	6195	-6447	-9741	8853

Item no. : F#1-EAST S/o no. : .240

****

Shear stresses :

Shear due to Vl (ås1) = Vl/(4(Cl)(T))
= 760 / (4 (7.75) (.24))
= 102 psi.

Shear due to Vc (ås2) = Vc/(4(Cc)(T))
=-220 / (4 (.1875) (.24))
=-1223 psi.

Shear due to Mt (ås3) = 0 psi.

Stresses	Au	Al	Bu	Bl	Cu	Cl	Du	Dl
-ås 1	0	0	0	0	-102	-102	102	102
-ås 2	-1223	-1223	1223	1223	0	0	0	0
-ås 3	0	0	0	0	0	0	0	0
-åst	-1223	-1223	1223	1223	-102	-102	102	102

Combined stress intensity :

- When åst = 0

å (comb.) = The larger of :
1) åct
2) ålt
3) ålt - åct

- When åst <> 0

å (comb.) = The larger of :
1) 0.5[ålt+åct+Sqr.((ålt-åct)^2+4(åst^2))]
2) 0.5[ålt+åct-Sqr.((ålt-åct)^2+4(åst^2))]
3) Sqr.((ålt-åct)^2+4(åst^2)))

Stresses	Au	Al	Bu	Bl	Cu	Cl	Du	Dl
-ås (comb.)	33155	38860	-37786	38427	13342	-13469	-19275	19064

FORM 5007 REV. 4/91

Raytheon
Engineers & Constructors

GENERAL COMPUTATION SHEET

CALCULATION SET NO			REV	COMP BY	CHK'D BY
M-101			0	M. Schultz DATE 12/20/94	[illegible] DATE 1/25/95
PRELIM	FINAL	VOID			
SHEET	OF			DATE	DATE
J.O 9353.001					

PROJECT FMC CORP.

SUBJECT SLURRY POT PUMP BRACKETS

/FURNACE #2-EAST POT/

JOINT #14 - LOAD #6 (DL+LL)

3/8" THK. SHELL IS OK

.200" THK SHELL IS MINIMUM ALLOWABLE:

MAX. MEMBRANE STRESS (CIRCUMF.)

359 PSI + 13,655 - 39 PSI = 13,975 PSI ≈ 1.1(12,700) = 13,970 PSI ✓

MAX. SURFACE STRESS (LONGIT.)

-22,292 PSI < 3.0(12,700) = 38,100 PSI ✓

JOINT #14 - LOAD #7 (DL+SEISMIC)

3/8" THK. SHELL IS OK

.280" THK. SHELL IS MINIMUM ALLOWABLE:

MAX. MEMBRANE STRESS (CIRCUMF.)

-520 PSI - 13,228 PSI = -13,748 PSI < 1.1(12,700) = 13,970 ✓

-520 PSI + 13,228 PSI + 256 PSI = +12964 PSI ✓

MAX. SURFACE STRESS (LONGIT.)

- 29,454 PSI = -29,454 PSI < 3(12,700) = 38,100 PSI

CRITICAL LOAD CONDITION - MIN. THK. = 0.280"

APPLIES TO FURNACE #2 - EAST POT

United Engineers & Constructors
A Raytheon Company

GENERAL COMPUTATION SHEET

CALCULATION SET NO.			REV	COMP. BY	CHK'D BY
M-101"			0	M. SCHULTZ	C7
PRELIM	FINAL	VOID		DATE 12/15/94	DATE 1/25/95
SHEET	OF			DATE	DATE
J.O. 9353.001					

PROJECT FMC, CORP.

SUBJECT SLURRY POT PUMP BRACKETS

FURNACE #2 - EAST POT

$\sin\theta = \frac{14'}{36''}$ $\theta = 22.89°$

$\alpha_{(13)} = 180° - 22.89° = 157.11°$

$\alpha_{(14)} = 180° + 22.89° = 202.89°$

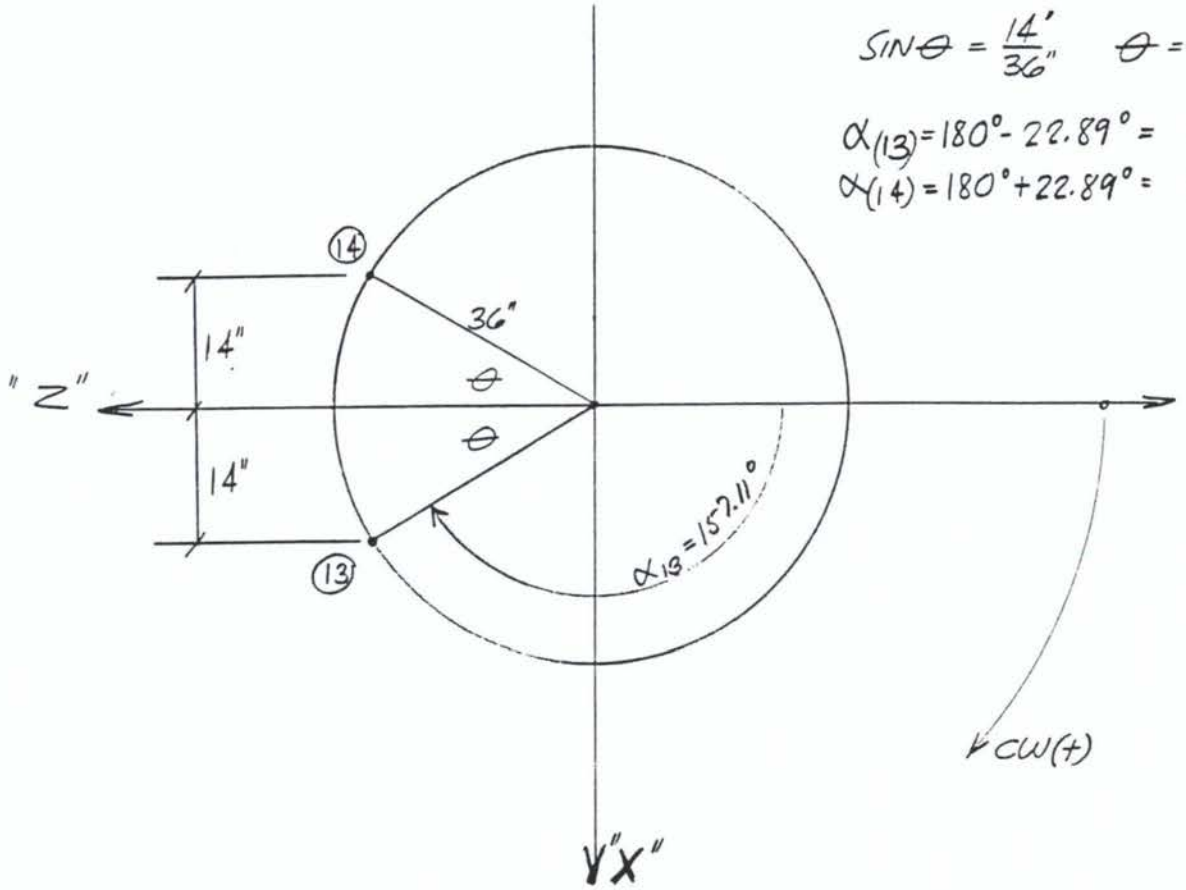

LET THESE RUNS ESTABLISH MIN. THK. FOR:

FURNACE #2 EAST POT

SLURRY POT PUMP BRACKET (FMCP-F4E)
* FURNACE ~~4~~ 2 - EAST SLURRY POT

SUPPORT REACTIONS -UNIT KIPS INCH STRUCTURE TYPE = SPACE

JOINT	LOAD	FORCE-X	FORCE-Y	FORCE-Z	MOM-X	MOM-Y	MOM Z
13	1	0.02	0.65	0.00	-15.04	0.01	-0.42
	2	0.00	0.08	0.00	-2.35	0.00	-0.06
	3	0.00	-0.13	0.00	3.01	0.00	0.08
	4	-0.24	-0.54	0.46	-34.58	-0.05	-1.83
	5	0.00	0.00	-0.22	7.46	-0.01	0.00
	6	0.02	0.73	0.00	-17.39	0.01	-0.49
	7	0.20	0.99	-0.35	12.40	0.04	1.00
	8	0.01	0.59	-0.16	-7.94	0.00	-0.38
14	1	-0.02	0.89	0.00	-20.28	-0.02	0.11
	2	0.00	0.12	0.00	-3.25	0.00	0.01
	3	0.00	-0.18	0.00	4.06	0.00	-0.02
	4	-0.28	0.54	-0.46	34.58	0.02	-6.52
	5	0.00	0.00	-0.31	14.83	0.02	-0.02
	6 (DL+LL)	**-0.02**	**1.02**	**0.00**	**-23.54**	**-0.02**	**0.11**
	7 (DL+SEIS)	**0.20**	**0.40**	**0.35**	**-44.19**	**-0.03**	**4.99**
	8	-0.01	0.80	-0.23	-7.13	0.00	0.08

********** END OF LATEST ANALYSIS RESULT **********

78. LOAD LIST 6 TO 8
79. PRINT JOINT DISPLACEMENTS

STEARNS-ROGER DIV.¶ TRANSFORMATION OF COORDINATES PROGRAM

DATE 12-15-1994
TIME 15:36:38

FURNACE #2 - EAST POT
JOINT #14 - LOAD #6
(DL+LL) $S_A = 1.1S_m \leq 3.0S_m$

VERTICAL VESSEL

NOZZLE ORIENTATION = 202.80 DEG

PIPING LOADS :

FXO =	-20.00 LBS	MXO =	-1961.67 FT-LBS
FYO =	1020.00 LBS	MYO =	-1.67 FT-LBS
FZO =	0.00 LBS	MZO =	9.17 FT-LBS

TRANSLATION OF ROTATED LOADS = 0.00 IN

SECONDARY ROTATION AROUND HORIZONTAL = 0.00 DEG

ROTATED AND/OR TRANSLATED LOADS :

P (Z) =	0.01 KIPS	MC(Y) =	-0.02 IN-KIPS
VC(X) =	-0.02 KIPS	ML(X) =	-21.66 IN-KIPS
VL(Y) =	1.02 KIPS	MT(Z) =	9.22 IN-KIPS

****

PRESSURE VESSEL DESIGN PRO CORP.
HOUSTON TX

****

--- COMPUTATION OF LOCAL STRESSES ---

CUSTOMER NAME : FMC CORP.

P.O. NO. : 9353001

ITEM NO. : F#2-EAST S/O NO. : .375

DESIGNER NAME : M.SCHULTZ DATE : 12-19-1994

****

--- Stresses in Cylindrical Shell ---

Attachment Mk. : JT14LD6

M.A.W.P. : 2 psi.
Des. temp. : 100 deg. F

Vessel

Cyl. ID. : 71.25 in. Cyl. mean rad. : 35.8125 in. (corr.)
Cyl. thk. : .375 in. (.375 in. (corr.))
Material : SA 36
Allow. stress : 12700 psi.

Attachment

Shape : Rectangular
Cl : 17.25 in.
Cc : .125 in.

Loads & Moments

Radial load P : 10 lb.
Shear load Vc :-20 lb.
Shear load Vl : 1020 lb.
Moment Mc :-20 in.-lb.
Moment Ml :-21660 in.-lb.
Moment Mt : 9220 in.-lb.

Stress coefficient factors

Kn : 1	Kb : 1	Iv : 1	
C1a : 14.69529	C1b : 16.23275	C2a : .1946482	C2b : .1438118
C3 : 7.697482E-02	C4 : .1009	C5 : 8.300258	C6 : 1.462491E-02
L1a : 16.83805	L1b : 17.02763	L2a : .1434798	L2b : .1039827
L3 : .3232207	L4 : .06	L5 : .84346	L6 : 4.130381E-02
K1(Nf) : .91	K1(Nx) : 1.68	K1(Mf) : 1.76	K1(Mx) : 1.2
K2(Nf) : 1.48	K2(Nx) : 1.2	K2(Mf) : .88	K2(Mx) : 1.25
Kc(é) : 1.008052	Kc(Mf) : 1.287217	Kc(Mx) : 1.66028	
Cc(Nf) : .15	Cc(Nx) : .44		

Kl(é) : 1.345913 Kl(Mf) : 2.104697 Kl(Mx) : 1.204513
Cl(Nf) : .77 Cl(Nx) : .24

Item no. : F#2-EAST S/o no. : .375

****

metric parameters

Gamma = Rm/T = 35.8125 / .375
= 95.5

á1x = Cc/Rm = .125 / 35.8125 = 3.490401E-03
á2x = Cl/Rm = 17.25 / 35.8125 = .4816754
áx = á1x/á2x = 3.490401E-03 / .4816754 = 7.246377E-03

á1 : 6.705466E-02 á2 : .03449 á3 : 1.803717E-02
á4 : 2.321776E-02 á5 : 9.320976E-02 á6 : .1961783

Circumferential stresses :

Membrane due to P (åc1) = Kn(C1x)(P/(Rm(T)))
= 1 (C1x) (10 / (35.8125 (.375)))
= 11 psi. (12 psi.)

Bending due to P (åc2) = Kb(C2x)(6(P)/(T^2))
= 1 (C2x) (6 (10) / (.375 ^ 2))
= 83 psi. (61 psi.)

Membrane due to Mc (åc3) = Kn(C3)(Mc/((Rm^2)(á)(T)))
= 1 (7.697482E-02) (-20 / ((35.8125 ^ 2) (1.803717E-02) (.375)))
=-1 psi.

Bending due to Mc (åc4) = Kb(C4)(6(Mc)/((T^2)(Rm)(á)))
= 1 (.1009) (6 (-20) / ((.375 ^ 2) (35.8125) (2.321776E-02)))
=-105 psi.

Membrane due to Ml (åc5) = Kn(C5)(Ml/((Rm^2)(á)(T)))
= 1 (8.300258) (-21660 / ((35.8125 ^ 2) (9.320976E-02) (.375)))
=-4011 psi.

Bending due to Ml (åc6) = Kb(C6)(6(Ml)/((T^2)(Rm)(á)))
= 1 (1.462491E-02) (6 (-21660) / ((.375 ^ 2) (35.8125) (.1961783)))
=-1925 psi.

Press. stress (åc7) = Dp(Rm)(Iv)/(T)
= 2 (35.8125) (1) / (.375)
= 191 psi.

Stresses	Au	Al	Bu	Bl	Cu	Cl	Du	Dl
-åc 1	-12	-12	-12	-12	-11	-11	-11	-11
-åc 2	-61	61	-61	61	-83	83	-83	83
-åc 3	0	0	0	0	1	1	-1	-1
-åc 4	0	0	0	0	105	-105	-105	105
-åc 5	4011	4011	-4011	-4011	0	0	0	0
-åc 6	1925	-1925	-1925	1925	0	0	0	0
-åc	5863	2135	-6009	-2037	12	-32	-200	176
-åp	191	191	191	191	191	191	191	191

-act	6054	2326	-5818	-1846	203	159	-9	367

Item no. : F#2-EAST S/o no. : .375

****

metric parameters

Gamma = 95.5

áx1 : 3.490401E-03
áx2 : .4816754
áx : 7.246377E-03

á1 : 5.185783E-02 á2 : 5.457154E-02 á3 : 1.803717E-02
á4 : 2.994676E-02 á5 : 9.320976E-02 á6 : .1122724

Longitudinal stresses :

Membrane due to P (ål1) = Kn(L1x)(P/(Rm(T)))
= 1 (L1x) (10 / (35.8125 (.375)))
= 13 psi. (13 psi.)

Bending due to P (ål2) = Kb(L2x)(6(P)/(T^2))
= 1 (L2x) (6 (10) / (.375 ^ 2))
= 61 psi. (44 psi.)

Membrane due to Mc (ål3) = Kn(L3)(Mc/((Rm^2)(á)(T)))
= 1 (.3232207) (-20 / ((35.8125 ^ 2) (1.803717E-02) (.375)))
=-2 psi.

ding due to Mc (ål4) = Kb(L4)(6(Mc)/((T^2)(Rm)(á)))
= 1 (.06) (6 (-20) / ((.375 ^ 2) (35.8125) (2.994676E-02)))
=-49 psi.

Membrane due to Ml (ål5) = Kn(L5)(Ml/((Rm^2)(á)(T)))
= 1 (.84346) (-21660 / ((35.8125 ^ 2) (9.320976E-02) (.375)))
=-409 psi.

Bending due to Ml (ål6) = Kb(L6)(6(Ml)/((T^2)(Rm)(á)))
= 1 (4.130381E-02) (6 (-21660) / ((.375 ^ 2) (35.8125) (.1122724)))
=-9495 psi.

Press. stress (ål7) = Dp(Rm)(Iv)/(2(T))
= 2 (35.8125) (1) / (2 (.375))
= 96 psi.

Stresses	Au	Al	Bu	Bl	Cu	Cl	Du	Dl
-ål 1	-13	-13	-13	-13	-13	-13	-13	-13
-ål 2	-61	61	-61	61	-44	44	-44	44
-ål 3	0	0	0	0	2	2	-2	-2
-ål 4	0	0	0	0	49	-49	-49	49
-ål 5	409	409	-409	-409	0	0	0	0
-ål 6	9495	-9495	-9495	9495	0	0	0	0
-ål	9830	-9038	-9978	9134	-6	-16	-108	78
-åp	96	96	96	96	96	96	96	96

-ålt	9926	-8942	-9882	9230	90	80	-12	174

Item no. : F#2-EAST S/o no. : .375

****

ear stresses :

Shear due to Vl (ås1) = Vl/(4(Cl)(T))
= 1020 / (4 (17.25) (.375))
= 39 psi.

Shear due to Vc (ås2) = Vc/(4(Cc)(T))
=-20 / (4 (.125) (.375))
=-108 psi.

Shear due to Mt (ås3) = 0 psi.

Stresses	Au	Al	Bu	Bl	Cu	Cl	Du	Dl
-ås 1	0	0	0	0	-39	-39	39	39
-ås 2	-108	-108	108	108	0	0	0	0
-ås 3	0	0	0	0	0	0	0	0
-åst	-108	-108	108	108	-39	-39	39	39

Combined stress intensity :

- When åst = 0

comb.) = The larger of :
) åct
2) ålt
3) ålt - åct

- When åst <> 0

å (comb.) = The larger of :
1) 0.5[ålt+åct+Sqr.((ålt-åct)^2+4(åst^2))]
2) 0.5[ålt+åct-Sqr.((ålt-åct)^2+4(åst^2))]
3) Sqr.((ålt-åct)^2+4(åst^2)))

Stresses	Au	Al	Bu	Bl	Cu	Cl	Du	Dl
-ås (comb.)	9929	11270	-9886	11078	215	175	78	375

****

PRESSURE VESSEL DESIGN PRO CORP.
HOUSTON TX

****

--- COMPUTATION OF LOCAL STRESSES ---

CUSTOMER NAME : FMC CORP.

P.O. NO. : 9353001

ITEM NO. : F#2-EAST S/O NO. : .20000

DESIGNER NAME : M.SCHULTZ DATE : 12-19-1994

****

--- Stresses in Cylindrical Shell ---

Attachment Mk. : JT14LD6

M.A.W.P. : 2 psi.
Des. temp. : 100 deg. F

Vessel

Cyl. ID. : 71.6 in. Cyl. mean rad. : 35.9 in. (corr.)
Cyl. thk. : .2 in. (.2 in. (corr.))
Material : SA 36
Allow. stress : 12700 psi.

Attachment

Shape : Rectangular
Cl : 17.25 in.
Cc : .125 in.

Loads & Moments

Radial load P : 10 lb.
Shear load Vc :-20 lb.
Shear load Vl : 1020 lb.
Moment Mc :-20 in.-lb.
Moment Ml :-21660 in.-lb.
Moment Mt : 9220 in.-lb.

Stress coefficient factors

Kn : 1	Kb : 1	Iv : 1	
C1a : 23.75517	C1b : 27.90683	C2a : .1708822	C2b : .1184849
C3 : .1210046	C4 : .1	C5 : 15.10861	C6 : 9.68625E-03
L1a : 27.53272	L1b : 29.88587	L2a : .1150381	L2b : 7.988606E-02
L3 : 1.004711	L4 : .06	L5 : .5125719	L6 : 2.659184E-02
K1(Nf) : .91	K1(Nx) : 1.68	K1(Mf) : 1.76	K1(Mx) : 1.2
K2(Nf) : 1.48	K2(Nx) : 1.2	K2(Mf) : .88	K2(Mx) : 1.25
Kc(é) : .9560968	Kc(Mf) : 1.186134	Kc(Mx) : 1.465296	
Cc(Nf) : .09	Cc(Nx) : .44		

Kl(é) : 1.456635 Kl(Mf) : 2.079143 Kl(Mx) : 1.197391
Cl(Mf) : .8 Cl(Mx) : .07

Item no. : F#2-EAST S/o no. : .20000

****

ometric parameters

Gamma = Rm/T = 35.9 / .2
= 179.5

á1x = Cc/Rm = .125 / 35.9 = 3.481894E-03
á2x = Cl/Rm = 17.25 / 35.9 = .4805014
áx = á1x/á2x = 3.481894E-03 / .4805014 = 7.246377E-03

á1 : 6.689123E-02 á2 : 3.440594E-02 á3 : 1.799321E-02
á4 : 2.134235E-02 á5 : 9.298259E-02 á6 : .1933241

Circumferential stresses :

Membrane due to P (åc1) = Kn(C1x)(P/(Rm(T)))
= 1 (C1x) (10 / (35.9 (.2)))
= 33 psi. (39 psi.)

Bending due to P (åc2) = Kb(C2x)(6(P)/(T^2))
= 1 (C2x) (6 (10) / (.2 ^ 2))
= 256 psi. (178 psi.)

Membrane due to Mc (åc3) = Kn(C3)(Mc/((Rm^2)(á)(T)))
= 1 (.1210046) (-20 / ((35.9 ^ 2) (1.799321E-02
) (.2)))
=-2 psi.

Bending due to Mc (åc4) = Kb(C4)(6(Mc)/((T^2)(Rm)(á)))
= 1 (.1) (6 (-20) / ((.2 ^ 2) (35.9) (
2.134235E-02)))
=-393 psi.

Membrane due to Ml (åc5) = Kn(C5)(Ml/((Rm^2)(á)(T)))
= 1 (15.10861) (-21660 / ((35.9 ^ 2) (
9.298259E-02) (.2)))
=-13655 psi.

Bending due to Ml (åc6) = Kb(C6)(6(Ml)/((T^2)(Rm)(á)))
= 1 (9.68625E-03) (6 (-21660) / ((.2 ^ 2) (35.9
) (.1933241)))
=-4535 psi.

Press. stress (åc7) = Dp(Rm)(Iv)/(T)
= 2 (35.9) (1) / (.2)
= 359 psi.

Stresses	Au	Al	Bu	Bl	Cu	Cl	Du	Dl
-åc 1	-39	-39	-39	-39	-33	-33	-33	-33
-åc 2	-178	178	-178	178	-256	256	-256	256
-åc 3	0	0	0	0	2	2	-2	-2
-åc 4	0	0	0	0	393	-393	-393	393
-åc 5	13655	13655	-13655	-13655	0	0	0	0
-åc 6	4535	-4535	-4535	4535	0	0	0	0
-åc	17973	9259	-18407	-8981	106	-168	-684	614
-åp	359	359	359	359	359	359	359	359

-âct	18332	9618	-18048	-8622	465	191	-325	973

Item no. : F#2-EAST S/o no. : .20000

****

metric parameters

Gamma = 179.5

áx1 : 3.481894E-03
áx2 : .4805014
áx : 7.246377E-03

á1 : 5.173143E-02 á2 : 5.443854E-02 á3 : 1.799321E-02
á4 : 2.636538E-02 á5 : 9.298259E-02 á6 : .1113366

Longitudinal stresses :

Membrane due to P (ål1) = Kn(L1x)(P/(Rm(T)))
= 1 (L1x) (10 / (35.9 (.2)))
= 38 psi. (42 psi.)

Bending due to P (ål2) = Kb(L2x)(6(P)/(T^2))
= 1 (L2x) (6 (10) / (.2 ^ 2))
= 173 psi. (120 psi.)

Membrane due to Mc (ål3) = Kn(L3)(Mc/((Rm^2)(á)(T)))
= 1 (1.004711) (-20 / ((35.9 ^ 2) (1.799321E-02
) (.2)))
=-5 psi.

Bending due to Mc (ål4) = Kb(L4)(6(Mc)/((T^2)(Rm)(á)))
= 1 (.06) (6 (-20) / ((.2 ^ 2) (35.9) (
2.636538E-02)))
=-191 psi.

Membrane due to Ml (ål5) = Kn(L5)(Ml/((Rm^2)(á)(T)))
= 1 (.5125719) (-21660 / ((35.9 ^ 2) (
9.298259E-02) (.2)))
=-464 psi.

Bending due to Ml (ål6) = Kb(L6)(6(Ml)/((T^2)(Rm)(á)))
= 1 (2.659184E-02) (6 (-21660) / ((.2 ^ 2) (
35.9) (.1113366)))
=-21617 psi.

Press. stress (ål7) = Dp(Rm)(Iv)/(2(T))
= 2 (35.9) (1) / (2 (.2))
= 179 psi.

Stresses	Au	Al	Bu	Bl	Cu	Cl	Du	Dl
-ål 1	-38	-38	-38	-38	-42	-42	-42	-42
-ål 2	-173	173	-173	173	-120	120	-120	120
-ål 3	0	0	0	0	5	5	-5	-5
-ål 4	0	0	0	0	191	-191	-191	191
-ål 5	464	464	-464	-464	0	0	0	0
-ål 6	21617	-21617	-21617	21617	0	0	0	0
-ål	21870	-21018	-22292	21288	34	-108	-358	264
-åp	179	179	179	179	179	179	179	179

-ålt	22049	-20839	-22113	21467	213	71	-179	443

Item no. : F#2-EAST S/o no. : .20000

****

stresses :

Shear due to Vl (ås1) = Vl/(4(Cl)(T))
= 1020 / (4 (17.25) (.2))
= 74 psi.

Shear due to Vc (ås2) = Vc/(4(Cc)(T))
=-20 / (4 (.125) (.2))
=-201 psi.

Shear due to Mt (ås3) = 0 psi.

Stresses	Au	Al	Bu	Bl	Cu	Cl	Du	Dl
-ås 1	0	0	0	0	-74	-74	74	74
-ås 2	-201	-201	201	201	0	0	0	0
-ås 3	0	0	0	0	0	0	0	0
-åst	-201	-201	201	201	-74	-74	74	74

Combined stress intensity :

- When åst = 0

mb.) = The larger of :
ct
2) ålt
3) ålt - åct

- When åst <> 0

å (comb.) = The larger of :
1) 0.5[ålt+åct+Sqr.((ålt-åct)^2+4(åst^2))]
2) 0.5[ålt+åct-Sqr.((ålt-åct)^2+4(åst^2))]
3) Sqr.((ålt-åct)^2+4(åst^2)))

Stresses	Au	Al	Bu	Bl	Cu	Cl	Du	Dl
-ås (comb.)	22060	30460	-22124	30092	485	226	-357	983

STEARNS-ROGER DIV.¶ TRANSFORMATION OF COORDINATES PROGRAM

DATE 12-15-1994
TIME 15:38:43

VERTICAL VESSEL

FURNACE #2 - EAST POT
JOINT #14 - LOAD #7
(DL+SEISMIC) S_A = 1.1Sm ≤ 3.0Sm

NOZZLE ORIENTATION = 202.80 DEG

PIPING LOADS :

FXO =	200.00 LBS	MXO =	-3682.50 FT-LBS
FYO =	400.00 LBS	MYO =	-2.50 FT-LBS
FZO =	350.00 LBS	MZO =	415.83 FT-LBS

TRANSLATION OF ROTATED LOADS = 0.00 IN

SECONDARY ROTATION AROUND HORIZONTAL = 0.00 DEG

ROTATED AND/OR TRANSLATED LOADS :

P (Z) =	0.25 KIPS	MC(Y) =	-0.03 IN-KIPS
VC(X) =	0.32 KIPS	ML(X) =	-38.80 IN-KIPS
VL(Y) =	0.40 KIPS	MT(Z) =	21.72 IN-KIPS

****

PRESSURE VESSEL DESIGN PRO CORP.
HOUSTON TX

****

--- COMPUTATION OF LOCAL STRESSES ---

CUSTOMER NAME : FMC CORP.

P.O. NO. : 9353001

ITEM NO. : F#2-EAST S/O NO. : .375

DESIGNER NAME : M.SCHULTZ DATE : 12-19-1994

****

--- Stresses in Cylindrical Shell ---

Attachment Mk. : JT14LD7

M.A.W.P. : 2 psi.
Des. temp. : 100 deg. F

Vessel

Cyl. ID. : 71.25 in. Cyl. mean rad. : 35.8125 in. (corr.)
Cyl. thk. : .375 in. (.375 in. (corr.))
Material : SA 36
Allow. stress : 12700 psi.

Attachment

Shape : Rectangular
Cl : 17.25 in.
Cc : .125 in.

Loads & Moments

Radial load P : 250 lb.
Shear load Vc : 320 lb.
Shear load Vl : 400 lb.
Moment Mc :-30 in.-lb.
Moment Ml :-38800 in.-lb.
Moment Mt : 21720 in.-lb.

Stress coefficient factors

Kn : 1	Kb : 1	Iv : 1	
C1a : 14.69529	C1b : 16.23275	C2a : .1946482	C2b : .1438118
C3 : 7.697482E-02	C4 : .1009	C5 : 8.300258	C6 : 1.462491E-02
L1a : 16.83805	L1b : 17.02763	L2a : .1434798	L2b : .1039827
L3 : .3232207	L4 : .06	L5 : .84346	L6 : 4.130381E-02
K1(Nf) : .91	K1(Nx) : 1.68	K1(Mf) : 1.76	K1(Mx) : 1.2
K2(Nf) : 1.48	K2(Nx) : 1.2	K2(Mf) : .88	K2(Mx) : 1.25
Kc(é) : 1.008052	Kc(Mf) : 1.287217	Kc(Mx) : 1.66028	
Cc(Nf) : .15	Cc(Nx) : .44		

Kl(é) : 1.345913 Kl(Mf) : 2.104697 Kl(Mx) : 1.204513
Cl(Mf) : .77 Cl(Mx) : .24

Item no. : F#2-EAST S/o no. : .375

****

ometric parameters

Gamma = Rm/T = 35.8125 / .375
= 95.5

á1x = Cc/Rm = .125 / 35.8125 = 3.490401E-03
á2x = Cl/Rm = 17.25 / 35.8125 = .4816754
áx = á1x/á2x = 3.490401E-03 / .4816754 = 7.246377E-03

á1 : 6.705466E-02 á2 : .03449 á3 : 1.803717E-02
á4 : 2.321776E-02 á5 : 9.320976E-02 á6 : .1961783

Circumferential stresses :

Membrane due to P (åc1) = Kn(C1x)(P/(Rm(T)))
= 1 (C1x) (250 / (35.8125 (.375)))
= 274 psi. (302 psi.)

Bending due to P (åc2) = Kb(C2x)(6(P)/(T^2))
= 1 (C2x) (6 (250) / (.375 ^ 2))
= 2076 psi. (1534 psi.)

Membrane due to Mc (åc3) = Kn(C3)(Mc/((Rm^2)(á)(T)))
= 1 (7.697482E-02) (-30 / ((35.8125 ^ 2) (1.803717E-02) (.375)))
=-1 psi.

Bending due to Mc (åc4) = Kb(C4)(6(Mc)/((T^2)(Rm)(á)))
= 1 (.1009) (6 (-30) / ((.375 ^ 2) (35.8125) (2.321776E-02)))
=-156 psi.

Membrane due to Ml (åc5) = Kn(C5)(Ml/((Rm^2)(á)(T)))
= 1 (8.300258) (-38800 / ((35.8125 ^ 2) (9.320976E-02) (.375)))
=-7185 psi.

Bending due to Ml (åc6) = Kb(C6)(6(Ml)/((T^2)(Rm)(á)))
= 1 (1.462491E-02) (6 (-38800) / ((.375 ^ 2) (35.8125) (.1961783)))
=-3447 psi.

Press. stress (åc7) = Dp(Rm)(Iv)/(T)
= 2 (35.8125) (1) / (.375)
= 191 psi.

Stresses	Au	Al	Bu	Bl	Cu	Cl	Du	Dl
-åc 1	-302	-302	-302	-302	-274	-274	-274	-274
-åc 2	-1534	1534	-1534	1534	-2076	2076	-2076	2076
-åc 3	0	0	0	0	1	1	-1	-1
-åc 4	0	0	0	0	156	-156	-156	156
-åc 5	7185	7185	-7185	-7185	0	0	0	0
-åc 6	3447	-3447	-3447	3447	0	0	0	0
-åc	8796	4970	-12468	-2506	-2193	1647	-2507	1957
-åp	191	191	191	191	191	191	191	191

-âct	8987	5161	-12277	-2315	-2002	1838	-2316	2148

Item no. : F#2-EAST S/o no. : .375

****

Geometric parameters

Gamma = 95.5

áx1 : 3.490401E-03
áx2 : .4816754
áx : 7.246377E-03

á1 : 5.185783E-02 á2 : 5.457154E-02 á3 : 1.803717E-02
á4 : 2.994676E-02 á5 : 9.320976E-02 á6 : .1122724

Longitudinal stresses :

Membrane due to P (ål1) = Kn(L1x)(P/(Rm(T)))
= 1 (L1x) (250 / (35.8125 (.375)))
= 313 psi. (317 psi.)

Bending due to P (ål2) = Kb(L2x)(6(P)/(T^2))
= 1 (L2x) (6 (250) / (.375 ^ 2))
= 1530 psi. (1109 psi.)

Membrane due to Mc (ål3) = Kn(L3)(Mc/((Rm^2)(á)(T)))
= 1 (.3232207) (-30 / ((35.8125 ^ 2) (1.803717E-02) (.375)))
=-2 psi.

Bending due to Mc (ål4) = Kb(L4)(6(Mc)/((T^2)(Rm)(á)))
= 1 (.06) (6 (-30) / ((.375 ^ 2) (35.8125) (2.994676E-02)))
=-73 psi.

Membrane due to Ml (ål5) = Kn(L5)(Ml/((Rm^2)(á)(T)))
= 1 (.84346) (-38800 / ((35.8125 ^ 2) (9.320976E-02) (.375)))
=-731 psi.

Bending due to Ml (ål6) = Kb(L6)(6(Ml)/((T^2)(Rm)(á)))
= 1 (4.130381E-02) (6 (-38800) / ((.375 ^ 2) (35.8125) (.1122724)))
=-17007 psi.

Press. stress (ål7) = Dp(Rm)(Iv)/(2(T))
= 2 (35.8125) (1) / (2 (.375))
= 96 psi.

Stresses	Au	Al	Bu	Bl	Cu	Cl	Du	Dl
-ål 1	-313	-313	-313	-313	-317	-317	-317	-317
-ål 2	-1530	1530	-1530	1530	-1109	1109	-1109	1109
-ål 3	0	0	0	0	2	2	-2	-2
-ål 4	0	0	0	0	73	-73	-73	73
-ål 5	731	731	-731	-731	0	0	0	0
-ål 6	17007	-17007	-17007	17007	0	0	0	0
-ål	15895	-15059	-19581	17493	-1351	721	-1501	863
-åp	96	96	96	96	96	96	96	96

-ålt	15991	-14963	-19485	17589	-1255	817	-1405	959

Item no. : F#2-EAST S/o no. : .375

****

Shear stresses :

Shear due to Vl (ås1) = Vl/(4(Cl)(T))
= 400 / (4 (17.25) (.375))
= 15 psi.

Shear due to Vc (ås2) = Vc/(4(Cc)(T))
= 320 / (4 (.125) (.375))
= 1707 psi.

Shear due to Mt (ås3) = 0 psi.

Stresses	Au	Al	Bu	Bl	Cu	Cl	Du	Dl
-ås 1	0	0	0	0	-15	-15	15	15
-ås 2	1707	1707	-1707	-1707	0	0	0	0
-ås 3	0	0	0	0	0	0	0	0
-åst	1707	1707	-1707	-1707	-15	-15	15	15

Combined stress intensity :

- When åst = 0

å (comb.) = The larger of :
1) åct
2) ålt
3) ålt - åct

- When åst <> 0

å (comb.) = The larger of :
1) 0.5[ålt+åct+Sqr.((ålt-åct)^2+4(åst^2))]
2) 0.5[ålt+åct-Sqr.((ålt-åct)^2+4(åst^2))]
3) Sqr.((ålt-åct)^2+4(åst^2)))

Stresses	Au	Al	Bu	Bl	Cu	Cl	Du	Dl
-ås (comb.)	16385	20412	-19870	20195	-2003	1838	-2317	2148

****

PRESSURE VESSEL DESIGN PRO CORP.
HOUSTON TX

****

--- COMPUTATION OF LOCAL STRESSES ---

CUSTOMER NAME : FMC CORP.

P.O. NO. : 9353001

ITEM NO. : F#2-EAST S/O NO. : .280

DESIGNER NAME : M.SCHULTZ DATE : 01-10-1995

****

--- Stresses in Cylindrical Shell ---

Attachment Mk. : JT14LD7

M.A.W.P. : 2 psi.
Des. temp. : 100 deg. F

Vessel

Cyl. ID. : 71.44 in. Cyl. mean rad. : 35.86 in. (corr.)
Cyl. thk. : .28 in. (.28 in. (corr.))
Material : SA 36
Allow. stress : 12700 psi.

Attachment

Shape : Rectangular
Cl : 17.25 in.
Cc : .125 in.

Loads & Moments

Radial load P : 250 lb.
Shear load Vc : 320 lb.
Shear load Vl : 400 lb.
Moment Mc :-30 in.-lb.
Moment Ml :-38800 in.-lb.
Moment Mt : 21720 in.-lb.

Stress coefficient factors

Kn : 1	Kb : 1	Iv : 1	
C1a : 18.34744	C1b : 20.89945	C2a : .1834893	C2b : .1342495
C3 : 7.359894E-02	C4 : .1	C5 : 11.42641	C6 : .0124718
L1a : 21.51096	L1b : 22.21207	L2a : .1317938	L2b : 9.280605E-02
L3 : .553916	L4 : .06	L5 : .3537108	L6 : 3.497706E-02
K1(Nf) : .91	K1(Nx) : 1.68	K1(Mf) : 1.76	K1(Mx) : 1.2
K2(Nf) : 1.48	K2(Nx) : 1.2	K2(Mf) : .88	K2(Mx) : 1.25
Kc(é) : .9839353	Kc(Mf) : 1.244606	Kc(Mx) : 1.57475	
Cc(Nf) : .09	Cc(Nx) : .44		

Kl(é) : 1.390746 Kl(Mf) : 2.089354 Kl(Mx) : 1.197391
Cl(Nf) : .8 Cl(Nx) : .07

Item no. : F#2-EAST S/o no. : .280

****

Geometric parameters

Gamma = Rm/T = 35.86 / .28
= 128.0714

á1x = Cc/Rm = .125 / 35.86 = 3.485778E-03
á2x = Cl/Rm = 17.25 / 35.86 = .4810374
áx = á1x/á2x = 3.485778E-03 / .4810374 = 7.246377E-03

á1 : 6.696583E-02 á2 : 3.444431E-02 á3 : 1.801328E-02
á4 : 2.241943E-02 á5 : 9.308631E-02 á6 : .1944903

Circumferential stresses :

Membrane due to P (åc1) = Kn(C1x)(P/(Rm(T)))
= 1 (C1x) (250 / (35.86 (.28)))
= 457 psi. (520 psi.)

Bending due to P (åc2) = Kb(C2x)(6(P)/(T^2))
= 1 (C2x) (6 (250) / (.28 ^ 2))
= 3511 psi. (2569 psi.)

Membrane due to Mc (åc3) = Kn(C3)(Mc/((Rm^2)(á)(T)))
= 1 (7.359894E-02) (-30 / ((35.86 ^ 2) (1.801328E-02) (.28)))
=-1 psi.

Bending due to Mc (åc4) = Kb(C4)(6(Mc)/((T^2)(Rm)(á)))
= 1 (.1) (6 (-30) / ((.28 ^ 2) (35.86) (2.241943E-02)))
=-287 psi.

Membrane due to Ml (åc5) = Kn(C5)(Ml/((Rm^2)(á)(T)))
= 1 (11.42641) (-38800 / ((35.86 ^ 2) (9.308631E-02) (.28)))
=-13228 psi.

Bending due to Ml (åc6) = Kb(C6)(6(Ml)/((T^2)(Rm)(á)))
= 1 (.0124718) (6 (-38800) / ((.28 ^ 2) (35.86) (.1944903)))
=-5311 psi.

Press. stress (åc7) = Dp(Rm)(Iv)/(T)
= 2 (35.86) (1) / (.28)
= 256 psi.

Stresses	Au	Al	Bu	Bl	Cu	Cl	Du	Dl
-åc 1	-520	-520	-520	-520	-457	-457	-457	-457
-åc 2	-2569	2569	-2569	2569	-3511	3511	-3511	3511
-åc 3	0	0	0	0	1	1	-1	-1
-åc 4	0	0	0	0	287	-287	-287	287
-åc 5	13228	13228	-13228	-13228	0	0	0	0
-åc 6	5311	-5311	-5311	5311	0	0	0	0
-åc	15450	9966	-21628	-5868	-3680	2768	-4256	3340
-åp	256	256	256	256	256	256	256	256

-act	15706	10222	-21372	-5612	-3424	3024	-4000	3596

-ålt	23466	-23462	-29326	27690	-2061	1219	-2341	1483

Item no. : F#2-EAST S/o no. : .280

****

ar stresses :

Shear due to Vl (ås1) = Vl/(4(Cl)(T))
= 400 / (4 (17.25) (.28))
= 21 psi.

Shear due to Vc (ås2) = Vc/(4(Cc)(T))
= 320 / (4 (.125) (.28))
= 2286 psi.

Shear due to Mt (ås3) = 0 psi.

Stresses	Au	Al	Bu	Bl	Cu	Cl	Du	Dl
-ås 1	0	0	0	0	-21	-21	21	21
-ås 2	2286	2286	-2286	-2286	0	0	0	0
-ås 3	0	0	0	0	0	0	0	0
-åst	2286	2286	-2286	-2286	-21	-21	21	21

Combined stress intensity :

- When åst = 0

comb.) = The larger of :
åct
2) ålt
3) ålt - åct

- When åst <> 0

å (comb.) = The larger of :
1) 0.5[ålt+åct+Sqr.((ålt-åct)^2+4(åst^2))]
2) 0.5[ålt+åct-Sqr.((ålt-åct)^2+4(åst^2))]
3) Sqr.((ålt-åct)^2+4(åst^2)))

Stresses	Au	Al	Bu	Bl	Cu	Cl	Du	Dl
-ås (comb.)	24089	33993	-29937	33614	-3425	3024	-4001	3596

Raytheon
Engineers & Constructors

GENERAL COMPUTATION SHEET

CALCULATION SET NO			REV	COMP BY	CHK'D BY
M-101			0	M. SCHARTZ DATE 12/20/94	C.T. DATE 1/25/95
PRELIM	FINAL	VOID			
SHEET OF				DATE	DATE
J.O 9353.001					

PROJECT FMC, CORP.

SUBJECT SLURRY POT PUMP BRACKETS

FURNACE #4 - EAST POT

JOINT #14 - LOAD #6 (DL+LL)

3/8" THK. SHELL IS OK.

.175" THK. SHELL IS MINIMUM ALLOWABLE:

MAX. MEMBRANE STRESS (CIRCUMF.)

410 PSI + 18700 PSI - 50 PSI = 19,060 PSI < 1.1(17,500) = 19,250

MAX. SURFACE STRESS (LONGIT.)

205 PSI + 28,105 PSI = 28,310 PSI < 3(17,500) = 52,500

JOINT #14 - LOAD #7 (DL+SEISMIC)

3/8" THK. SHELL IS OK.

.245" THK SHELL IS MINIMUM ALLOWABLE:

MAXIMUM MEMBRANE STRESS (CIRCUMF)

+297 - 667 + 18,503 = +18,133 PSI < 19,250 PSI

-667 - 18,503 = -19,170 ≈ 19,250 PSI

MAXIMUM SURFACE STRESS (LONGIT.)

-39,120 PSI < 3(17500) = 52,500

CRITICAL LOAD CONDITION - MIN. THK. = 0.245"

APPLIES TO FURNACE #4 - EAST POT

FORM 5007 REV. 4/91

United Engineers & Constructors
A Raytheon Company

GENERAL COMPUTATION SHEET

CALCULATION SET NO.			REV	COMP. BY	CHK'D BY
M-101			0	M. Schultz	C.T. [illegible]
PRELIM	FINAL	VOID		DATE 12/15/94	DATE 1/25/95
SHEET	OF			DATE	DATE
J.O. 9353.001					

PROJECT FMC, CORP.

SUBJECT SLURRY POT PUMP BRACKETS

FURNACE #4 - EAST POT

$\sin\theta = \frac{13''}{36''}$ $\theta = 21.17°$

$\alpha_{(13)} = 180° - 21.17° = 158.83°$

$\alpha_{(14)} = 180° + 21.17° = 201.17°$

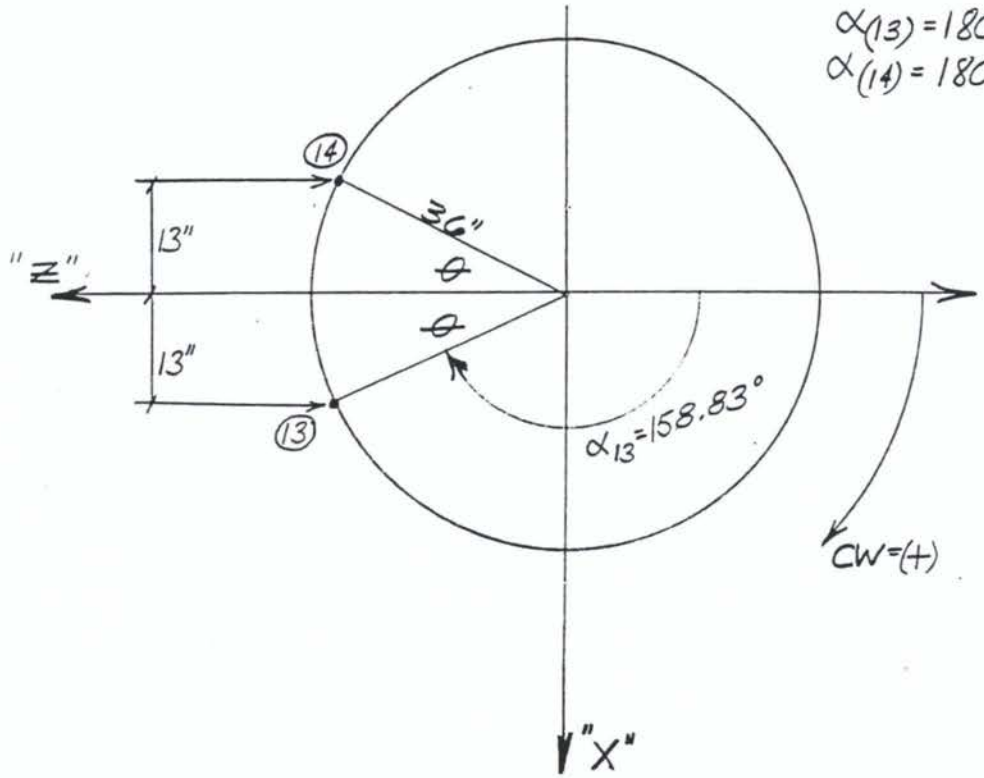

LET THESE RUNS ESTABLISH MIN. THK. FOR:

FURNACE #4 - EAST POT

SLURRY POT PUMP BRACKET (FMCP-F4E)
* FURNACE 4 - EAST SLURRY POT

SUPPORT REACTIONS -UNIT KIPS INCH STRUCTURE TYPE = SPACE

JOINT	LOAD	FORCE-X	FORCE-Y	FORCE-Z	MOM-X	MOM-Y	MOM Z
13	1	0.02	0.65	0.00	-15.04	0.01	-0.42
	2	0.00	0.08	0.00	-2.35	0.00	-0.06
	3	0.00	-0.13	0.00	3.01	0.00	0.08
	4	-0.24	-0.54	0.46	-34.58	-0.05	-1.83
	5	0.00	0.00	-0.22	7.46	-0.01	0.00
	6	0.02	0.73	0.00	-17.39	0.01	-0.49
	7	0.20	0.99	-0.35	12.40	0.04	1.00
	8	0.01	0.59	-0.16	-7.94	0.00	-0.38
14	1	-0.02	0.89	0.00	-20.28	-0.02	0.11
	2	0.00	0.12	0.00	-3.25	0.00	0.01
	3	0.00	-0.18	0.00	4.06	0.00	-0.02
	4	-0.28	0.54	-0.46	34.58	0.02	-6.52
	5	0.00	0.00	-0.31	14.83	0.02	-0.02
	6 (DL+LL)	**-0.02**	**1.02**	**0.00**	**-23.54**	**-0.02**	**0.11**
	7 (DL+SEIS)	**0.20**	**0.40**	**0.35**	**-44.19**	**-0.03**	**4.99**
	8	-0.01	0.80	-0.23	-7.13	0.00	0.08

********** END OF LATEST ANALYSIS RESULT **********

78. LOAD LIST 6 TO 8
79. PRINT JOINT DISPLACEMENTS

STEARNS-ROGER DIV.¶ TRANSFORMATION OF COORDINATES PROGRAM

DATE 12-15-1994
TIME 14:52:15

VERTICAL VESSEL

FURNACE #4 - EAST POT
JOINT #14 - LOAD #6
(DL+LL) $S_A = 1.1S_m$ & $3.0S_m$

NOZZLE ORIENTATION = 201.17 DEG

PIPING LOADS :

FXO =	-20.00 LBS	MXO =	-1961.67 FT-LBS
FYO =	1020.00 LBS	MYO =	-1.67 FT-LBS
FZO =	0.00 LBS	MZO =	9.17 FT-LBS

TRANSLATION OF ROTATED LOADS = 0.00 IN

SECONDARY ROTATION AROUND HORIZONTAL = 0.00 DEG

ROTATED AND/OR TRANSLATED LOADS :

P (Z) =	0.01 KIPS	MC(Y) =	-0.02 IN-KIPS
VC(X) =	-0.02 KIPS	ML(X) =	-21.91 IN-KIPS
VL(Y) =	1.02 KIPS	MT(Z) =	8.60 IN-KIPS

****

PRESSURE VESSEL DESIGN PRO CORP.
HOUSTON TX

****

--- COMPUTATION OF LOCAL STRESSES ---

CUSTOMER NAME : FMC CORP.

P.O. NO. : 9353001

ITEM NO. : F#4-EAST S/O NO. : .375

DESIGNER NAME : M.SCHULTZ DATE : 12-19-1994

****

--- Stresses in Cylindrical Shell ---

Attachment Mk. : JT14LD6

M.A.W.P. : 2 psi.
Des. temp. : 100 deg. F

Vessel

Cyl. ID. : 71.25 in. Cyl. mean rad. : 35.8125 in. (corr.)
Cyl. thk. : .375 in. (.375 in. (corr.))
Material : SA 516-70
Allow. stress : 17500 psi.

Attachment

Shape : Rectangular
Cl : 16.25 in.
Cc : .125 in.

Loads & Moments

Radial load P : 10 lb.
Shear load Vc :-20 lb.
Shear load Vl : 1020 lb.
Moment Mc :-20 in.-lb.
Moment Ml :-21910 in.-lb.
Moment Mt : 8600 in.-lb.

Stress coefficient factors

Kn : 1	Kb : 1	Iv : 1	
C1a : 14.97504	C1b : 16.25617	C2a : .1985132	C2b : .1460175
C3 : 7.386857E-02	C4 : .1009	C5 : 8.278334	C6 : 1.562734E-02
L1a : 17.05382	L1b : 17.16138	L2a : .1464124	L2b : .106738
L3 : .3122448	L4 : .06	L5 : .8214218	L6 : 4.350224E-02
K1(Nf) : .91	K1(Nx) : 1.68	K1(Mf) : 1.76	K1(Mx) : 1.2
K2(Nf) : 1.48	K2(Nx) : 1.2	K2(Mf) : .88	K2(Mx) : 1.25
Kc(é) : 1.007994	Kc(Mf) : 1.286997	Kc(Mx) : 1.659922	
Cc(Nf) : .15	Cc(Nx) : .44		

Kl(é) : 1.3456 Kl(Mf) : 2.103761 Kl(Mx) : 1.204348
Cl(Nf) : .77 Cl(Nx) : .24

Item no. : F#4-EAST S/o no. : .375

****

Geometric parameters

Gamma = Rm/T = 35.8125 / .375
= 95.5

á1x = Cc/Rm = .125 / 35.8125 = 3.490401E-03
á2x = Cl/Rm = 16.25 / 35.8125 = .4537522
áx = á1x/á2x = 3.490401E-03 / .4537522 = 7.692308E-03

á1 : 6.507067E-02 á2 : 3.347821E-02 á3 : 1.768167E-02
á4 : 2.275625E-02 á5 : 8.957173E-02 á6 : .1884376

Circumferential stresses :

Membrane due to P (åc1) = Kn(C1x)(P/(Rm(T)))
= 1 (C1x) (10 / (35.8125 (.375)))
= 11 psi. (12 psi.)

Bending due to P (åc2) = Kb(C2x)(6(P)/(T^2))
= 1 (C2x) (6 (10) / (.375 ^ 2))
= 85 psi. (62 psi.)

Membrane due to Mc (åc3) = Kn(C3)(Mc/((Rm^2)(á)(T)))
= 1 (7.386857E-02) (-20 / ((35.8125 ^ 2) (1.768167E-02) (.375)))
=-1 psi.

Bending due to Mc (åc4) = Kb(C4)(6(Mc)/((T^2)(Rm)(á)))
= 1 (.1009) (6 (-20) / ((.375 ^ 2) (35.8125) (2.275625E-02)))
=-107 psi.

Membrane due to Ml (åc5) = Kn(C5)(Ml/((Rm^2)(á)(T)))
= 1 (8.278334) (-21910 / ((35.8125 ^ 2) (8.957173E-02) (.375)))
=-4211 psi.

Bending due to Ml (åc6) = Kb(C6)(6(Ml)/((T^2)(Rm)(á)))
= 1 (1.562734E-02) (6 (-21910) / ((.375 ^ 2) (35.8125) (.1884376)))
=-2166 psi.

Press. stress (åc7) = Dp(Rm)(Iv)/(T)
= 2 (35.8125) (1) / (.375)
= 191 psi.

Stresses	Au	Al	Bu	Bl	Cu	Cl	Du	Dl
-åc 1	-12	-12	-12	-12	-11	-11	-11	-11
-åc 2	-62	62	-62	62	-85	85	-85	85
-åc 3	0	0	0	0	1	1	-1	-1
-åc 4	0	0	0	0	107	-107	-107	107
-åc 5	4211	4211	-4211	-4211	0	0	0	0
-åc 6	2166	-2166	-2166	2166	0	0	0	0
-åc	6303	2095	-6451	-1995	12	-32	-204	180
-åp	191	191	191	191	191	191	191	191

-åct	6494	2286	-6260	-1804	203	159	-13	371

Item no. : F#4-EAST S/o no. : .375

****

Geometric parameters

Gamma = 95.5

áx1 : 3.490401E-03
áx2 : .4537522
áx : 7.692308E-03

á1 : 5.032752E-02 á2 : 5.296022E-02 á3 : 1.768167E-02
á4 : 2.935018E-02 á5 : 8.957173E-02 á6 : .1078755

Longitudinal stresses :

Membrane due to P (ål1) = Kn(L1x)(P/(Rm(T)))
= 1 (L1x) (10 / (35.8125 (.375)))
= 13 psi. (13 psi.)

Bending due to P (ål2) = Kb(L2x)(6(P)/(T^2))
= 1 (L2x) (6 (10) / (.375 ^ 2))
= 62 psi. (46 psi.)

Membrane due to Mc (ål3) = Kn(L3)(Mc/((Rm^2)(á)(T)))
= 1 (.3122448) (-20 / ((35.8125 ^ 2) (1.768167E-02) (.375)))
=-2 psi.

Bending due to Mc (ål4) = Kb(L4)(6(Mc)/((T^2)(Rm)(á)))
= 1 (.06) (6 (-20) / ((.375 ^ 2) (35.8125) (2.935018E-02)))
=-50 psi.

Membrane due to Ml (ål5) = Kn(L5)(Ml/((Rm^2)(á)(T)))
= 1 (.8214218) (-21910 / ((35.8125 ^ 2) (8.957173E-02) (.375)))
=-419 psi.

Bending due to Ml (ål6) = Kb(L6)(6(Ml)/((T^2)(Rm)(á)))
= 1 (4.350224E-02) (6 (-21910) / ((.375 ^ 2) (35.8125) (.1078755)))
=-10528 psi.

Press. stress (ål7) = Dp(Rm)(Iv)/(2(T))
= 2 (35.8125) (1) / (2 (.375))
= 96 psi.

Stresses	Au	Al	Bu	Bl	Cu	Cl	Du	Dl
-ål 1	-13	-13	-13	-13	-13	-13	-13	-13
-ål 2	-62	62	-62	62	-46	46	-46	46
-ål 3	0	0	0	0	2	2	-2	-2
-ål 4	0	0	0	0	50	-50	-50	50
-ål 5	419	419	-419	-419	0	0	0	0
-ål 6	10528	-10528	-10528	10528	0	0	0	0
-ål	10872	-10060	-11022	10158	-7	-15	-111	81
-åp	96	96	96	96	96	96	96	96

-ålt	10968	-9964	-10926	10254	89	81	-15	177

Item no. : F#4-EAST S/o no. : .375

****

Shear stresses :

Shear due to Vl (ås1) = Vl/(4(Cl)(T))
= 1020 / (4 (16.25) (.375))
= 42 psi.

Shear due to Vc (ås2) = Vc/(4(Cc)(T))
=-20 / (4 (.125) (.375))
=-108 psi.

Shear due to Mt (ås3) = 0 psi.

Stresses	Au	Al	Bu	Bl	Cu	Cl	Du	Dl
-ås 1	0	0	0	0	-42	-42	42	42
-ås 2	-108	-108	108	108	0	0	0	0
-ås 3	0	0	0	0	0	0	0	0
-åst	-108	-108	108	108	-42	-42	42	42

Combined stress intensity :

- When åst = 0

å (comb.) = The larger of :
1) åct
2) ålt
3) ålt - åct

- When åst <> 0

å (comb.) = The larger of :
1) 0.5[ålt+åct+Sqr.((ålt-åct)^2+4(åst^2))]
2) 0.5[ålt+åct-Sqr.((ålt-åct)^2+4(åst^2))]
3) Sqr.((ålt-åct)^2+4(åst^2)))

Stresses	Au	Al	Bu	Bl	Cu	Cl	Du	Dl
-ås (comb.)	10971	12252	-10929	12060	217	177	84	380

****

PRESSURE VESSEL DESIGN PRO CORP.
HOUSTON TX

****

--- COMPUTATION OF LOCAL STRESSES ---

CUSTOMER NAME : FMC CORP.

P.O. NO. : 9353001

ITEM NO. : F#4-EAST S/O NO. : .175

DESIGNER NAME : M.SCHULTZ DATE : 12-19-1994

****

--- Stresses in Cylindrical Shell ---

Attachment Mk. : JT14LD6

M.A.W.P. : 2 psi.
Des. temp. : 100 deg. F

Vessel

Cyl. ID. : 71.65 in. Cyl. mean rad. : 35.9125 in. (corr.)
Cyl. thk. : .175 in. (.175 in. (corr.))
Material : SA 516-70
Allow. stress : 17500 psi.

Attachment

Shape : Rectangular
Cl : 16.25 in.
Cc : .125 in.

Loads & Moments

Radial load P : 10 lb.
Shear load Vc :-20 lb.
Shear load Vl : 1020 lb.
Moment Mc :-20 in.-lb.
Moment Ml :-21910 in.-lb.
Moment Mt : 8600 in.-lb.

Stress coefficient factors

Kn : 1	Kb : 1	Iv : 1	
C1a : 26.82052	C1b : 31.69997	C2a : .1688022	C2b : .1121872
C3 : .141452	C4 : .1	C5 : 17.20537	C6 : 9.019107E-03
L1a : 30.63355	L1b : 33.76146	L2a : .1101177	L2b : 7.694434E-02
L3 : 1.212499	L4 : 5.994786E-02	L5 : .5868015	L6 : 2.480922E-02
K1(Nf) : .91	K1(Nx) : 1.68	K1(Mf) : 1.76	K1(Mx) : 1.2
K2(Nf) : 1.48	K2(Nx) : 1.2	K2(Mf) : .88	K2(Mx) : 1.25
Kc(é) : .9421803	Kc(Mf) : 1.156768	Kc(Mx) : 1.410371	
Cc(Nf) : .09	Cc(Nx) : .44		

Kl(é) : 1.489136 Kl(Mf) : 2.073119 Kl(Mx) : 1.197231
Cl(Nf) : .8 Cl(Nx) : .07

Item no. : F#4-EAST S/o no. : .175

****

Geometric parameters

Gamma = Rm/T = 35.9125 / .175
= 205.2143

á1x = Cc/Rm = .125 / 35.9125 = 3.480682E-03
á2x = Cl/Rm = 16.25 / 35.9125 = .4524887
áx = á1x/á2x = 3.480682E-03 / .4524887 = 7.692308E-03

á1 : 6.488946E-02 á2 : 3.338498E-02 á3 : 1.763242E-02
á4 : 2.039662E-02 á5 : 8.932231E-02 á6 : .1851758

Circumferential stresses :

Membrane due to P (åc1) = Kn(C1x)(P/(Rm(T)))
= 1 (C1x) (10 / (35.9125 (.175)))
= 43 psi. (50 psi.)

Bending due to P (åc2) = Kb(C2x)(6(P)/(T^2))
= 1 (C2x) (6 (10) / (.175 ^ 2))
= 331 psi. (220 psi.)

Membrane due to Mc (åc3) = Kn(C3)(Mc/((Rm^2)(á)(T)))
= 1 (.141452) (-20 / ((35.9125 ^ 2) (1.763242E-02) (.175)))
=-2 psi.

Bending due to Mc (åc4) = Kb(C4)(6(Mc)/((T^2)(Rm)(á)))
= 1 (.1) (6 (-20) / ((.175 ^ 2) (35.9125) (2.039662E-02)))
=-536 psi.

Membrane due to Ml (åc5) = Kn(C5)(Ml/((Rm^2)(á)(T)))
= 1 (17.20537) (-21910 / ((35.9125 ^ 2) (8.932231E-02) (.175)))
=-18700 psi.

Bending due to Ml (åc6) = Kb(C6)(6(Ml)/((T^2)(Rm)(á)))
= 1 (9.019107E-03) (6 (-21910) / ((.175 ^ 2) (35.9125) (.1851758)))
=-5823 psi.

Press. stress (åc7) = Dp(Rm)(Iv)/(T)
= 2 (35.9125) (1) / (.175)
= 410 psi.

Stresses	Au	Al	Bu	Bl	Cu	Cl	Du	Dl
-åc 1	-50	-50	-50	-50	-43	-43	-43	-43
-åc 2	-220	220	-220	220	-331	331	-331	331
-åc 3	0	0	0	0	2	2	-2	-2
-åc 4	0	0	0	0	536	-536	-536	536
-åc 5	18700	18700	-18700	-18700	0	0	0	0
-åc 6	5823	-5823	-5823	5823	0	0	0	0
-åc	24253	13047	-24793	-12707	164	-246	-912	822
-åp	410	410	410	410	410	410	410	410

-åct	24663	13457	-24383	-12297	574	164	-502	1232

Item no. : F#4-EAST S/o no. : .175

****

Geometric parameters

Gamma = 205.2143

áx1 : 3.480682E-03
áx2 : .4524887
áx : 7.692308E-03

á1 : 5.018737E-02 á2 : 5.281274E-02 á3 : 1.763242E-02
á4 : 2.486826E-02 á5 : 8.932231E-02 á6 : .1069394

Longitudinal stresses :

Membrane due to P (ål1) = Kn(L1x)(P/(Rm(T)))
= 1 (L1x) (10 / (35.9125 (.175)))
= 49 psi. (54 psi.)

Bending due to P (ål2) = Kb(L2x)(6(P)/(T^2))
= 1 (L2x) (6 (10) / (.175 ^ 2))
= 216 psi. (151 psi.)

Membrane due to Mc (ål3) = Kn(L3)(Mc/((Rm^2)(á)(T)))
= 1 (1.212499) (-20 / ((35.9125 ^ 2) (1.763242E-02) (.175)))
=-7 psi.

Bending due to Mc (ål4) = Kb(L4)(6(Mc)/((T^2)(Rm)(á)))
= 1 (5.994786E-02) (6 (-20) / ((.175 ^ 2) (35.9125) (2.486826E-02)))
=-264 psi.

Membrane due to Ml (ål5) = Kn(L5)(Ml/((Rm^2)(á)(T)))
= 1 (.5868015) (-21910 / ((35.9125 ^ 2) (8.932231E-02) (.175)))
=-639 psi.

Bending due to Ml (ål6) = Kb(L6)(6(Ml)/((T^2)(Rm)(á)))
= 1 (2.480922E-02) (6 (-21910) / ((.175 ^ 2) (35.9125) (.1069394)))
=-27731 psi.

Press. stress (ål7) = Dp(Rm)(Iv)/(2(T))
= 2 (35.9125) (1) / (2 (.175))
= 205 psi.

Stresses	Au	Al	Bu	Bl	Cu	Cl	Du	Dl
-ål 1	-49	-49	-49	-49	-54	-54	-54	-54
-ål 2	-216	216	-216	216	-151	151	-151	151
-ål 3	0	0	0	0	7	7	-7	-7
-ål 4	0	0	0	0	264	-264	-264	264
-ål 5	639	639	-639	-639	0	0	0	0
-ål 6	27731	-27731	-27731	27731	0	0	0	0
-ål	28105	-26925	-28635	27259	66	-160	-476	354
-åp	205	205	205	205	205	205	205	205

-ålt	28310	-26720	-28430	27464	271	45	-271	559

Item no. : F#4-EAST S/o no. : .175

****

Shear stresses :

Shear due to Vl (ås1) = Vl/(4(Cl)(T))
= 1020 / (4 (16.25) (.175))
= 90 psi.

Shear due to Vc (ås2) = Vc/(4(Cc)(T))
=-20 / (4 (.125) (.175))
=-230 psi.

Shear due to Mt (ås3) = 0 psi.

Stresses	Au	Al	Bu	Bl	Cu	Cl	Du	Dl
-ås 1	0	0	0	0	-90	-90	90	90
-ås 2	-230	-230	230	230	0	0	0	0
-ås 3	0	0	0	0	0	0	0	0
-åst	-230	-230	230	230	-90	-90	90	90

Combined stress intensity :

- When åst = 0

å (comb.) = The larger of :
1) åct
2) ålt
3) ålt - åct

- When åst <> 0

å (comb.) = The larger of :
1) 0.5[ålt+åct+Sqr.((ålt-åct)^2+4(åst^2))]
2) 0.5[ålt+åct-Sqr.((ålt-åct)^2+4(åst^2))]
3) Sqr.((ålt-åct)^2+4(åst^2)))

Stresses	Au	Al	Bu	Bl	Cu	Cl	Du	Dl
-ås (comb.)	28324	40180	-28444	39764	599	216	-534	1244

STEARNS-ROGER DIV.¶ TRANSFORMATION OF COORDINATES PROGRAM

DATE 12-15-1994
TIME 14:57:26

VERTICAL VESSEL

FURNACE #4 - EAST POT
JOINT #14 - LOAD #7
(DL+SEISMIC) $S_A = 1.1S_m$ & $3.0S_m$

NOZZLE ORIENTATION = 201.17 DEG

PIPING LOADS :

FXO =	200.00 LBS	MXO =	-3682.50 FT-LBS
FYO =	400.00 LBS	MYO =	-2.50 FT-LBS
FZO =	350.00 LBS	MZO =	415.83 FT-LBS

TRANSLATION OF ROTATED LOADS = 0.00 IN

SECONDARY ROTATION AROUND HORIZONTAL = 0.00 DEG

ROTATED AND/OR TRANSLATED LOADS :

P (Z) =	0.25 KIPS	MC(Y) =	-0.03 IN-KIPS
VC(X) =	0.31 KIPS	ML(X) =	-39.41 IN-KIPS
VL(Y) =	0.40 KIPS	MT(Z) =	20.61 IN-KIPS

****

PRESSURE VESSEL DESIGN PRO CORP.
HOUSTON TX

****

--- COMPUTATION OF LOCAL STRESSES ---

CUSTOMER NAME : FMC CORP

P.O. NO. : 9353001

ITEM NO. : F#4-EAST S/O NO. : .375

DESIGNER NAME : M.SCHULTZ DATE : 12-21-1994

****

--- Stresses in Cylindrical Shell ---

Attachment Mk. : JT14LD7

M.A.W.P. : 2 psi.
Des. temp. : 100 deg. F

Vessel

Cyl. ID. : 71.25 in. Cyl. mean rad. : 35.8125 in. (corr.)
Cyl. thk. : .375 in. (.375 in. (corr.))
Material : SA 516 70
Allow. stress : 17500 psi.

Attachment

Shape : Rectangular
Cl : 16.25 in.
Cc : .125 in.

Loads & Moments

Radial load P : 250 lb.
Shear load Vc : 310 lb.
Shear load Vl : 400 lb.
Moment Mc :-30 in.-lb.
Moment Ml :-39410 in.-lb.
Moment Mt : 20610 in.-lb.

Stress coefficient factors

Kn : 1	Kb : 1	Iv : 1	
C1a : 14.97504	C1b : 16.25617	C2a : .1985132	C2b : .1460175
C3 : 7.386857E-02	C4 : .1009	C5 : 8.278334	C6 : 1.562734E-02
L1a : 17.05382	L1b : 17.16138	L2a : .1464124	L2b : .106738
L3 : .3122448	L4 : .06	L5 : .8214218	L6 : 4.350224E-02
K1(Nf) : .91	K1(Nx) : 1.68	K1(Mf) : 1.76	K1(Mx) : 1.2
K2(Nf) : 1.48	K2(Nx) : 1.2	K2(Mf) : .88	K2(Mx) : 1.25
Kc(é) : 1.007994	Kc(Mf) : 1.286997	Kc(Mx) : 1.659922	
Cc(Nf) : .15	Cc(Nx) : .44		

Kl(é) : 1.3456 Kl(Mf) : 2.103761 Kl(Mx) : 1.204348
Cl(Nf) : .77 Cl(Nx) : .24

Item no. : F#4-EAST S/o no. : .375

****

Geometric parameters

Gamma = Rm/T = 35.8125 / .375
= 95.5

á1x = Cc/Rm = .125 / 35.8125 = 3.490401E-03
á2x = Cl/Rm = 16.25 / 35.8125 = .4537522
áx = á1x/á2x = 3.490401E-03 / .4537522 = 7.692308E-03

á1 : 6.507067E-02 á2 : 3.347821E-02 á3 : 1.768167E-02
á4 : 2.275625E-02 á5 : 8.957173E-02 á6 : .1884376

Circumferential stresses :

Membrane due to P (åc1) = Kn(C1x)(P/(Rm(T)))
= 1 (C1x) (250 / (35.8125 (.375)))
= 279 psi. (303 psi.)

Bending due to P (åc2) = Kb(C2x)(6(P)/(T^2))
= 1 (C2x) (6 (250) / (.375 ^ 2))
= 2117 psi. (1558 psi.)

Membrane due to Mc (åc3) = Kn(C3)(Mc/((Rm^2)(á)(T)))
= 1 (7.386857E-02) (-30 / ((35.8125 ^ 2) (1.768167E-02) (.375)))
=-1 psi.

Bending due to Mc (åc4) = Kb(C4)(6(Mc)/((T^2)(Rm)(á)))
= 1 (.1009) (6 (-30) / ((.375 ^ 2) (35.8125) (2.275625E-02)))
=-159 psi.

Membrane due to Ml (åc5) = Kn(C5)(Ml/((Rm^2)(á)(T)))
= 1 (8.278334) (-39410 / ((35.8125 ^ 2) (8.957173E-02) (.375)))
=-7574 psi.

Bending due to Ml (åc6) = Kb(C6)(6(Ml)/((T^2)(Rm)(á)))
= 1 (1.562734E-02) (6 (-39410) / ((.375 ^ 2) (35.8125) (.1884376)))
=-3895 psi.

Press. stress (åc7) = Dp(Rm)(Iv)/(T)
= 2 (35.8125) (1) / (.375)
= 191 psi.

Stresses	Au	Al	Bu	Bl	Cu	Cl	Du	Dl
-åc 1	-303	-303	-303	-303	-279	-279	-279	-279
-åc 2	-1558	1558	-1558	1558	-2117	2117	-2117	2117
-åc 3	0	0	0	0	1	1	-1	-1
-åc 4	0	0	0	0	159	-159	-159	159
-åc 5	7574	7574	-7574	-7574	0	0	0	0
-åc 6	3895	-3895	-3895	3895	0	0	0	0
-åc	9608	4934	-13330	-2424	-2236	1680	-2556	1996
-åp	191	191	191	191	191	191	191	191

-åct	9799	5125	-13139	-2233	-2045	1871	-2365	2187

Item no. : F#4-EAST S/o no. : .375

****

Geometric parameters

Gamma = 95.5

áx1 : 3.490401E-03
áx2 : .4537522
áx : 7.692308E-03

á1 : 5.032752E-02 á2 : 5.296022E-02 á3 : 1.768167E-02
á4 : 2.935018E-02 á5 : 8.957173E-02 á6 : .1078755

Longitudinal stresses :

Membrane due to P (ål1) = Kn(L1x)(P/(Rm(T)))
= 1 (L1x) (250 / (35.8125 (.375)))
= 317 psi. (319 psi.)

Bending due to P (ål2) = Kb(L2x)(6(P)/(T^2))
= 1 (L2x) (6 (250) / (.375 ^ 2))
= 1562 psi. (1139 psi.)

Membrane due to Mc (ål3) = Kn(L3)(Mc/((Rm^2)(á)(T)))
= 1 (.3122448) (-30 / ((35.8125 ^ 2) (1.768167E-02) (.375)))
=-2 psi.

Bending due to Mc (ål4) = Kb(L4)(6(Mc)/((T^2)(Rm)(á)))
= 1 (.06) (6 (-30) / ((.375 ^ 2) (35.8125) (2.935018E-02)))
=-74 psi.

Membrane due to Ml (ål5) = Kn(L5)(Ml/((Rm^2)(á)(T)))
= 1 (.8214218) (-39410 / ((35.8125 ^ 2) (8.957173E-02) (.375)))
=-752 psi.

Bending due to Ml (ål6) = Kb(L6)(6(Ml)/((T^2)(Rm)(á)))
= 1 (4.350224E-02) (6 (-39410) / ((.375 ^ 2) (35.8125) (.1078755)))
=-18935 psi.

Press. stress (ål7) = Dp(Rm)(Iv)/(2(T))
= 2 (35.8125) (1) / (2 (.375))
= 96 psi.

Stresses	Au	Al	Bu	Bl	Cu	Cl	Du	Dl
-ål 1	-317	-317	-317	-317	-319	-319	-319	-319
-ål 2	-1562	1562	-1562	1562	-1139	1139	-1139	1139
-ål 3	0	0	0	0	2	2	-2	-2
-ål 4	0	0	0	0	74	-74	-74	74
-ål 5	752	752	-752	-752	0	0	0	0
-ål 6	18935	-18935	-18935	18935	0	0	0	0
-ål	17808	-16938	-21566	19428	-1382	748	-1534	892
-åp	96	96	96	96	96	96	96	96

-ålt	17904	-16842	-21470	19524	-1286	844	-1438	988

Item no. : F#4-EAST S/o no. : .375

****

Shear stresses :

Shear due to Vl (ås1) = Vl/(4(Cl)(T))
= 400 / (4 (16.25) (.375))
= 16 psi.

Shear due to Vc (ås2) = Vc/(4(Cc)(T))
= 310 / (4 (.125) (.375))
= 1653 psi.

Shear due to Mt (ås3) = 0 psi.

Stresses	Au	Al	Bu	Bl	Cu	Cl	Du	Dl
-ås 1	0	0	0	0	-16	-16	16	16
-ås 2	1653	1653	-1653	-1653	0	0	0	0
-ås 3	0	0	0	0	0	0	0	0
-åst	1653	1653	-1653	-1653	-16	-16	16	16

Combined stress intensity :

- When åst = 0

å (comb.) = The larger of :
1) åct
2) ålt
3) ålt - åct

- When åst <> 0

å (comb.) = The larger of :
1) 0.5[ålt+åct+Sqr.((ålt-åct)^2+4(åst^2))]
2) 0.5[ålt+åct-Sqr.((ålt-åct)^2+4(åst^2))]
3) Sqr.((ålt-åct)^2+4(åst^2)))

Stresses	Au	Al	Bu	Bl	Cu	Cl	Du	Dl
-ås (comb.)	18228	22214	-21787	22007	-2046	1871	-2366	2187

****

PRESSURE VESSEL DESIGN PRO CORP.
HOUSTON TX

****

--- COMPUTATION OF LOCAL STRESSES ---

CUSTOMER NAME : FMC CORP

P.O. NO. : 9353001

ITEM NO. : F#4-EAST S/O NO. : .245

DESIGNER NAME : M.SCHULTZ DATE : 01-25-1995

****

--- Stresses in Cylindrical Shell ---

Attachment Mk. : JT14LD7

M.A.W.P. : 2 psi.
Des. temp. : 100 deg. F

Vessel

Cyl. ID. : 72.51 in. Cyl. mean rad. : 36.3775 in. (corr.)
Cyl. thk. : .245 in. (.245 in. (corr.))
Material : SA 516 70
Allow. stress : 17500 psi.

Attachment

Shape : Rectangular
Cl : 16.25 in.
Cc : .125 in.

Loads & Moments

Radial load P : 250 lb.
Shear load Vc : 310 lb.
Shear load Vl : 400 lb.
Moment Mc :-30 in.-lb.
Moment Ml :-39410 in.-lb.
Moment Mt : 20610 in.-lb.

Stress coefficient factors

Kn : 1	Kb : 1	Iv : 1	
C1a : 21.02693	C1b : 23.78591	C2a : .1816435	C2b : .1329535
C3 : 8.466295E-02	C4 : .1	C5 : 13.42208	C6 : 1.188602E-02
L1a : 24.78852	L1b : 25.80077	L2a : .127991	L2b : 8.952862E-02
L3 : .665332	L4 : .06	L5 : .4113222	L6 : 3.378801E-02
K1(Nf) : .91	K1(Nx) : 1.68	K1(Mf) : 1.76	K1(Mx) : 1.2
K2(Nf) : 1.48	K2(Nx) : 1.2	K2(Mf) : .88	K2(Mx) : 1.25
Kc(é) : .9728607	Kc(Mf) : 1.221228	Kc(Mx) : 1.531042	
Cc(Nf) : .09	Cc(Nx) : .44		

Kl(é) : 1.416515 Kl(Mf) : 2.084379 Kl(Mx) : 1.197231
Cl(Nf) : .8 Cl(Nx) : .07

Item no. : F#4-EAST S/o no. : .245

****

Geometric parameters

Gamma = Rm/T = 36.3775 / .245
= 148.4796

á1x = Cc/Rm = .125 / 36.3775 = 3.43619E-03
á2x = Cl/Rm = 16.25 / 36.3775 = .4467047
áx = á1x/á2x = 3.43619E-03 / .4467047 = 7.692308E-03

á1 : .06406 á2 : 3.295823E-02 á3 : 1.740703E-02
á4 : 2.125795E-02 á5 : 8.818053E-02 á6 : .1838016

Circumferential stresses :

Membrane due to P (åc1) = Kn(C1x)(P/(Rm(T)))
= 1 (C1x) (250 / (36.3775 (.245)))
= 590 psi. (667 psi.)

Bending due to P (åc2) = Kb(C2x)(6(P)/(T^2))
= 1 (C2x) (6 (250) / (.245 ^ 2))
= 4539 psi. (3322 psi.)

Membrane due to Mc (åc3) = Kn(C3)(Mc/((Rm^2)(á)(T)))
= 1 (8.466295E-02) (-30 / ((36.3775 ^ 2) (1.740703E-02) (.245)))
=-1 psi.

Bending due to Mc (åc4) = Kb(C4)(6(Mc)/((T^2)(Rm)(á)))
= 1 (.1) (6 (-30) / ((.245 ^ 2) (36.3775) (2.125795E-02)))
=-389 psi.

Membrane due to Ml (åc5) = Kn(C5)(Ml/((Rm^2)(á)(T)))
= 1 (13.42208) (-39410 / ((36.3775 ^ 2) (8.818053E-02) (.245)))
=-18503 psi.

Bending due to Ml (åc6) = Kb(C6)(6(Ml)/((T^2)(Rm)(á)))
= 1 (1.188602E-02) (6 (-39410) / ((.245 ^ 2) (36.3775) (.1838016)))
=-7004 psi.

Press. stress (åc7) = Dp(Rm)(Iv)/(T)
= 2 (36.3775) (1) / (.245)
= 297 psi.

Stresses	Au	Al	Bu	Bl	Cu	Cl	Du	Dl
-åc 1	-667	-667	-667	-667	-590	-590	-590	-590
-åc 2	-3322	3322	-3322	3322	-4539	4539	-4539	4539
-åc 3	0	0	0	0	1	1	-1	-1
-åc 4	0	0	0	0	389	-389	-389	389
-åc 5	18503	18503	-18503	-18503	0	0	0	0
-åc 6	7004	-7004	-7004	7004	0	0	0	0
-åc	21518	14154	-29496	-8844	-4739	3561	-5519	4337
-åp	297	297	297	297	297	297	297	297

-åct	21815	14451	-29199	-8547	-4442	3858	-5222	4634

Item no. : F#4-EAST S/o no. : .245

****

metric parameters

Gamma = 148.4796

ax1 : 3.43619E-03
ax2 : .4467047
ax : 7.692308E-03

a1 : 4.954584E-02 a2 : 5.213766E-02 a3 : 1.740703E-02
a4 : 2.665089E-02 a5 : 8.818053E-02 a6 : .1055724

Longitudinal stresses :

Membrane due to P (al1) = Kn(L1x)(P/(Rm(T)))
= 1 (L1x) (250 / (36.3775 (.245)))
= 695 psi. (724 psi.)

Bending due to P (al2) = Kb(L2x)(6(P)/(T^2))
= 1 (L2x) (6 (250) / (.245 ^ 2))
= 3198 psi. (2237 psi.)

Membrane due to Mc (al3) = Kn(L3)(Mc/((Rm^2)(a)(T)))
= 1 (.665332) (-30 / ((36.3775 ^ 2) (1.740703E-02) (.245)))
=-5 psi.

Bending due to Mc (al4) = Kb(L4)(6(Mc)/((T^2)(Rm)(a)))
= 1 (.06) (6 (-30) / ((.245 ^ 2) (36.3775) (2.665089E-02)))
=-187 psi.

Membrane due to Ml (al5) = Kn(L5)(Ml/((Rm^2)(a)(T)))
= 1 (.4113222) (-39410 / ((36.3775 ^ 2) (8.818053E-02) (.245)))
=-568 psi.

Bending due to Ml (al6) = Kb(L6)(6(Ml)/((T^2)(Rm)(a)))
= 1 (3.378801E-02) (6 (-39410) / ((.245 ^ 2) (36.3775) (.1055724)))
=-34659 psi.

Press. stress (al7) = Dp(Rm)(Iv)/(2(T))
= 2 (36.3775) (1) / (2 (.245))
= 148 psi.

Stresses	Au	Al	Bu	Bl	Cu	Cl	Du	Dl
-al 1	-695	-695	-695	-695	-724	-724	-724	-724
-al 2	-3198	3198	-3198	3198	-2237	2237	-2237	2237
-al 3	0	0	0	0	5	5	-5	-5
-al 4	0	0	0	0	187	-187	-187	187
-al 5	568	568	-568	-568	0	0	0	0
-al 6	34659	-34659	-34659	34659	0	0	0	0
-al	31334	-31588	-39120	36594	-2769	1331	-3153	1695
-ap	148	148	148	148	148	148	148	148

-ålt	31482	-31440	-38972	36742	-2621	1479	-3005	1843

Item no. : F#4-EAST S/o no. : .245

****

Shear stresses :

Shear due to Vl (ås1) = Vl/(4(Cl)(T))
= 400 / (4 (16.25) (.245))
= 25 psi.

Shear due to Vc (ås2) = Vc/(4(Cc)(T))
= 310 / (4 (.125) (.245))
= 2531 psi.

Shear due to Mt (ås3) = 0 psi.

Stresses	Au	Al	Bu	Bl	Cu	Cl	Du	Dl
-ås 1	0	0	0	0	-25	-25	25	25
-ås 2	2531	2531	-2531	-2531	0	0	0	0
-ås 3	0	0	0	0	0	0	0	0
-åst	2531	2531	-2531	-2531	-25	-25	25	25

Combined stress intensity :

- When åst = 0

å (comb.) = The larger of :
1) åct
2) ålt
3) ålt - åct

- When åst <> 0

å (comb.) = The larger of :
1) 0.5[ålt+åct+Sqr.((ålt-åct)^2+4(åst^2))]
2) 0.5[ålt+åct-Sqr.((ålt-åct)^2+4(åst^2))]
3) Sqr.((ålt-åct)^2+4(åst^2)))

Stresses	Au	Al	Bu	Bl	Cu	Cl	Du	Dl
-ås (comb.)	32105	46169	-39590	45571	-4443	3858	-5223	4634

Raytheon
Engineers & Constructors

GENERAL COMPUTATION SHEET

CALCULATION SET NO			REV	COMP BY	CHK'D BY
M-101			0	M. Schultz DATE 12/20/94	C.T. [illegible] DATE 1/25/95
PRELIM	FINAL	VOID			
SHEET	OF			DATE	DATE
J.O. 9353.001					

PROJECT FMC, CORP.

SUBJECT SLURRY POT PUMP BRACKETS

FURNACE #4 - WEST POT

JOINT #6 - LOAD #6 (DL+LL)

3/8" THK. SHELL IS OK.

.190" THK. SHELL IS MINIMUM ALLOWABLE:

MAX. MEMBRANE STRESS (CIRCUMF.)

378 PSI + 18,988 PSI = 19,366 PSI ≈ 1.1(17500) = 19,250 PSI ✓

MAX. SURFACE STRESS = (LONGIT.)

189 PSI + 52,361 PSI = 52,550 PSI ≈ 3.0(17500) = 52,500 ✓

JOINT #6 - LOAD #8 (DL + SEISMIC)

3/8" THK. SHELL IS OK.

.220" THK. SHELL IS MINIMUM ALLOWABLE:

MAX. MEMBRANE STRESS (CIRCUMF.)

326 PSI − 548 PSI + 16,082 PSI = 15,860 PSI < 1.1(17,500) = 19,250 ✓

−548 PSI − 16,082 PSI = −16,630

MAX SURFACE STRESS (LONGIT.)

PSI = −52,221 PSI < 3.0(17,500) = 52,500

CRITICAL LOAD CONDITION - MIN. THK. = 0.220"

APPLIES TO FURNACE #4 - WEST POT

FORM 5007 REV. 4/91

United Engineers & Constructors
A Raytheon Company

GENERAL COMPUTATION SHEET

CALCULATION SET NO			REV	COMP BY	CHK'D BY
M-101			0	M. Schultz	C.T. [illegible]
PRELIM	FINAL	VOID		DATE 12/15/94	DATE 1/25/95
SHEET	OF			DATE	DATE
J.O. 9353.001					

PROJECT FMC, CORP.

SUBJECT SLURRY POT PUMP BRACKETS

FURNACE #4 - WEST POT

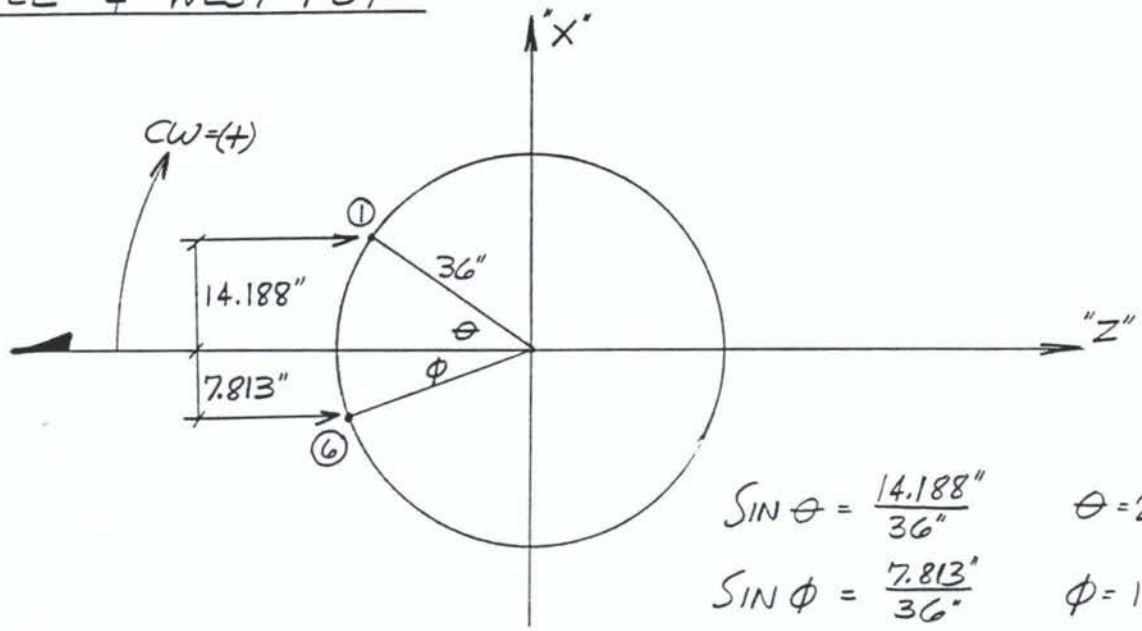

$\sin\theta = \frac{14.188''}{36''}$ $\theta = 23.21°$

$\sin\phi = \frac{7.813''}{36''}$ $\phi = 12.53°$

$\phi' = 360° - 12.53° = 347.47°$

~~12/5/94~~
~~PAGE NO. 30-3~~
M-101, P.161 OF 192

SLURRY POT PUMP BRACKET (FMCP-F4W)
* FURNACE NO 4 - WEST POT

SUPPORT REACTIONS -UNIT KIPS INCH STRUCTURE TYPE = SPACE

JOINT	LOAD	FORCE-X	FORCE-Y	FORCE-Z	MOM-X	MOM-Y	MOM Z
1	1	0.00	0.48	0.00	10.75	0.00	0.00
	2	0.00	0.10	0.00	2.27	0.00	0.00
	3	0.00	-0.10	0.00	-2.15	0.00	0.00
	4	-0.19	0.42	-0.26	9.64	1.42	0.01
	5	0.00	0.00	-0.16	-3.66	0.00	0.00
	6	0.00	0.58	0.00	13.02	0.00	0.00
	7 (DL+SEISMIC)	-0.14	0.75	-0.20	16.91	1.07	0.00
	8	0.14	0.12	0.20	2.44	-1.07	-0.01
	9	0.00	0.44	0.12	12.42	0.00	0.00
6	1	0.00	0.78	0.00	15.96	0.00	0.00
	2	0.00	0.10	0.00	2.08	0.00	0.00
	3	0.00	-0.16	0.00	-3.19	0.00	0.00
	4	-0.24	-0.42	0.26	-8.79	1.62	0.01
	5	0.00	0.00	-0.26	-6.19	0.00	0.00
	6 (DL+LL)	0.00	0.88	0.00	18.03	0.00	0.00
	7	-0.18	0.38	0.20	7.77	1.21	0.01
	8 (DL+SEIS)	0.18	1.02	-0.20	20.96	-1.21	-0.01
	9	0.00	0.70	0.20	19.01	0.00	0.00

********** END OF LATEST ANALYSIS RESULT **********

70. LOAD LIST 1 TO 5
71. PRINT JOINT DISPLACEMENTS LIST 3 4

STEARNS-ROGER DIV.¶ TRANSFORMATION OF COORDINATES PROGRAM

DATE 12-15-1994
TIME 14:46:18

FURNACE #4 - WEST POT
JOINT #6 - LOAD #6
(DL+LL)

VERTICAL VESSEL

NOZZLE ORIENTATION = 347.47 DEG

PIPING LOADS :

FXO =	0.00 LBS	MXO =	1502.50 FT-LBS
FYO =	880.00 LBS	MYO =	0.00 FT-LBS
FZO =	0.00 LBS	MZO =	0.00 FT-LBS

TRANSLATION OF ROTATED LOADS = 0.00 IN

SECONDARY ROTATION AROUND HORIZONTAL = 0.00 DEG

ROTATED AND/OR TRANSLATED LOADS :

P (Z) =	0.00 KIPS	MC(Y) =	0.00 IN-KIPS
VC(X) =	0.00 KIPS	ML(X) =	-17.60 IN-KIPS
VL(Y) =	0.88 KIPS	MT(Z) =	-3.91 IN-KIPS

****

PRESSURE VESSEL DESIGN PRO CORP.
HOUSTON TX

****

--- COMPUTATION OF LOCAL STRESSES ---

CUSTOMER NAME : FMC CORP

P.O. NO. : 9353.001

ITEM NO. : F#4-WEST S/O NO. : .375

DESIGNER NAME : M.SCHULTZ DATE : 12-20-1994

****

--- Stresses in Cylindrical Shell ---

Attachment Mk. : JT6LD6

M.A.W.P. : 2 psi.
Des. temp. : 100 deg. F

Vessel

Cyl. ID. : 71.25 in. Cyl. mean rad. : 35.8125 in. (corr.)
Cyl. thk. : .375 in. (.375 in. (corr.))
Material : SA 516 70
Allow. stress : 17500 psi.

Attachment

Shape : Rectangular
Cl : 7.75 in.
Cc : .1875 in.

Loads & Moments

Radial load P : 0 lb.
Shear load Vc : 0 lb.
Shear load Vl : 880 lb.
Moment Mc : 0 in.-lb.
Moment Ml :-17600 in.-lb.
Moment Mt :-3910 in.-lb.

Stress coefficient factors

Kn : 1	Kb : 1	Iv : 1	
C1a : 16.4399	C1b : 16.78083	C2a : .218978	C2b : .1604909
C3 : 7.754372E-02	C4 : .1009	C5 : 7.252811	C6 : 2.568189E-02
L1a : 17.85809	L1b : 17.25823	L2a : .1679735	L2b : .1235527
L3 : .3252309	L4 : .06	L5 : .6576346	L6 : 6.549262E-02
K1(Nf) : .91	K1(Nx) : 1.68	K1(Mf) : 1.76	K1(Mx) : 1.2
K2(Nf) : 1.48	K2(Nx) : 1.2	K2(Mf) : .88	K2(Mx) : 1.25
Kc(é) : 1.005836	Kc(Mf) : 1.278839	Kc(Mx) : 1.646668	
Cc(Nf) : .15	Cc(Nx) : .44		

Kl(é) : 1.334016 Kl(Mf) : 2.069142 Kl(Mx) : 1.198229
Cl(Nf) : .77 Cl(Nx) : .24

Item no. : F#4-WEST S/o no. : .375

****

ometric parameters

Gamma = Rm/T = 35.8125 / .375
= 95.5

á1x = Cc/Rm = .1875 / 35.8125 = 5.235602E-03
á2x = Cl/Rm = 7.75 / 35.8125 = .2164049
áx = á1x/á2x = 5.235602E-03 / .2164049 = 2.419355E-02

á1 : 5.468157E-02 á2 : 2.840488E-02 á3 : 1.810228E-02
á4 : .0231499 á5 : 6.258932E-02 á6 : .1295062

Circumferential stresses :

Membrane due to P (åc1) = Kn(C1x)(P/(Rm(T)))
= 1 (C1x) (0 / (35.8125 (.375)))
= 0 psi. (0 psi.)

Bending due to P (åc2) = Kb(C2x)(6(P)/(T^2))
= 1 (C2x) (6 (0) / (.375 ^ 2))
= 0 psi. (0 psi.)

Membrane due to Mc (åc3) = Kn(C3)(Mc/((Rm^2)(á)(T)))
= 1 (7.754372E-02) (0 / ((35.8125 ^ 2) (1.810228E-02) (.375)))
= 0 psi.

Bending due to Mc (åc4) = Kb(C4)(6(Mc)/((T^2)(Rm)(á)))
= 1 (.1009) (6 (0) / ((.375 ^ 2) (35.8125) (.0231499)))
= 0 psi.

Membrane due to Ml (åc5) = Kn(C5)(Ml/((Rm^2)(á)(T)))
= 1 (7.252811) (-17600 / ((35.8125 ^ 2) (6.258932E-02) (.375)))
=-4242 psi.

Bending due to Ml (åc6) = Kb(C6)(6(Ml)/((T^2)(Rm)(á)))
= 1 (2.568189E-02) (6 (-17600) / ((.375 ^ 2) (35.8125) (.1295062)))
=-4159 psi.

Press. stress (åc7) = Dp(Rm)(Iv)/(T)
= 2 (35.8125) (1) / (.375)
= 191 psi.

Stresses	Au	Al	Bu	Bl	Cu	Cl	Du	Dl
-åc 1	0	0	0	0	0	0	0	0
-åc 2	0	0	0	0	0	0	0	0
-åc 3	0	0	0	0	0	0	0	0
-åc 4	0	0	0	0	0	0	0	0
-åc 5	4242	4242	-4242	-4242	0	0	0	0
-åc 6	4159	-4159	-4159	4159	0	0	0	0
-åc	8401	83	-8401	-83	0	0	0	0
-åp	191	191	191	191	191	191	191	191

-act	8592	274	-8210	108	191	191	191	191

Item no. : F#4-WEST S/o no. : .375

****

ometric parameters

Gamma = 95.5

áx1 : 5.235602E-03
áx2 : .2164049
áx : 2.419355E-02

á1 : 4.241911E-02 á2 : 4.460884E-02 á3 : 1.810228E-02
á4 : 2.980845E-02 á5 : 6.258932E-02 á6 : 7.499635E-02

Longitudinal stresses :

Membrane due to P (ål1) = Kn(L1x)(P/(Rm(T)))
= 1 (L1x) (0 / (35.8125 (.375)))
= 0 psi. (0 psi.)

Bending due to P (ål2) = Kb(L2x)(6(P)/(T^2))
= 1 (L2x) (6 (0) / (.375 ^ 2))
= 0 psi. (0 psi.)

Membrane due to Mc (ål3) = Kn(L3)(Mc/((Rm^2)(á)(T)))
= 1 (.3252309) (0 / ((35.8125 ^ 2) (1.810228E-02) (.375)))
= 0 psi.

ending due to Mc (ål4) = Kb(L4)(6(Mc)/((T^2)(Rm)(á)))
= 1 (.06) (6 (0) / ((.375 ^ 2) (35.8125) (2.980845E-02)))
= 0 psi.

Membrane due to Ml (ål5) = Kn(L5)(Ml/((Rm^2)(á)(T)))
= 1 (.6576346) (-17600 / ((35.8125 ^ 2) (6.258932E-02) (.375)))
=-386 psi.

Bending due to Ml (ål6) = Kb(L6)(6(Ml)/((T^2)(Rm)(á)))
= 1 (6.549262E-02) (6 (-17600) / ((.375 ^ 2) (35.8125) (7.499635E-02)))
=-18312 psi.

Press. stress (ål7) = Dp(Rm)(Iv)/(2(T))
= 2 (35.8125) (1) / (2 (.375))
= 96 psi.

Stresses	Au	Al	Bu	Bl	Cu	Cl	Du	Dl
-ål 1	0	0	0	0	0	0	0	0
-ål 2	0	0	0	0	0	0	0	0
-ål 3	0	0	0	0	0	0	0	0
-ål 4	0	0	0	0	0	0	0	0
ål 5	386	386	-386	-386	0	0	0	0
l 6	18312	-18312	-18312	18312	0	0	0	0
-ål	18698	-17926	-18698	17926	0	0	0	0
-åp	96	96	96	96	96	96	96	96

-ålt	18794	-17830	-18602	18022	96	96	96	96

Item no. : F#4-WEST S/o no. : .375

****

Shear stresses :

Shear due to Vl (ås1) = Vl/(4(Cl)(T))
= 880 / (4 (7.75) (.375))
= 76 psi.

Shear due to Vc (ås2) = Vc/(4(Cc)(T))
= 0 / (4 (.1875) (.375))
= 0 psi.

Shear due to Mt (ås3) = 0 psi.

Stresses	Au	Al	Bu	Bl	Cu	Cl	Du	Dl
-ås 1	0	0	0	0	-76	-76	76	76
-ås 2	0	0	0	0	0	0	0	0
-ås 3	0	0	0	0	0	0	0	0
-åst	0	0	0	0	-76	-76	76	76

Combined stress intensity :

- When åst = 0

å (comb.) = The larger of :
1) åct
2) ålt
3) ålt - åct

- When åst <> 0

å (comb.) = The larger of :
1) 0.5[ålt+åct+Sqr.((ålt-åct)^2+4(åst^2))]
2) 0.5[ålt+åct-Sqr.((ålt-åct)^2+4(åst^2))]
3) Sqr.((ålt-åct)^2+4(åst^2)))

Stresses	Au	Al	Bu	Bl	Cu	Cl	Du	Dl
-ås (comb.)	18794	-18105	-18603	18022	233	233	233	233

****

PRESSURE VESSEL DESIGN PRO CORP.
HOUSTON TX

****

--- COMPUTATION OF LOCAL STRESSES ---

CUSTOMER NAME : FMC CORP

P.O. NO. : 9353.001

ITEM NO. : F#4-WEST S/O NO. : .190

DESIGNER NAME : M.SCHULTZ DATE : 12-20-1994

****

--- Stresses in Cylindrical Shell ---

Attachment Mk. : JT6LD6

M.A.W.P. : 2 psi.
Des. temp. : 100 deg. F

Vessel

Cyl. ID. : 71.62 in. Cyl. mean rad. : 35.905 in. (corr.)
Cyl. thk. : .19 in. (.19 in. (corr.))
Material : SA 516 70
Allow. stress : 17500 psi.

Attachment

Shape : Rectangular
Cl : 7.75 in.
Cc : .1875 in.

Loads & Moments

Radial load P : 0 lb.
Shear load Vc : 0 lb.
Shear load Vl : 880 lb.
Moment Mc : 0 in.-lb.
Moment Ml :-17600 in.-lb.
Moment Mt :-3910 in.-lb.

Stress coefficient factors

Kn : 1	Kb : 1	Iv : 1	
C1a : 27.8891	C1b : 30.90211	C2a : .1897126	C2b : .1302496
C3 : .1311907	C4 : .1	C5 : 16.4961	C6 : 1.585486E-02
L1a : 31.29509	L1b : 32.82476	L2a : .1357579	L2b : 9.411623E-02
L3 : 1.104026	L4 : .06	L5 : .4582869	L6 : .0473144
K1(Nf) : .91	K1(Nx) : 1.68	K1(Mf) : 1.76	K1(Mx) : 1.2
K2(Nf) : 1.48	K2(Nx) : 1.2	K2(Mf) : .88	K2(Mx) : 1.25
Kc(é) : .9507444	Kc(Mf) : 1.169942	Kc(Mx) : 1.436777	
Cc(Nf) : .09	Cc(Nx) : .44		

Kl(é) : 1.45265 Kl(Mf) : 2.042313 Kl(Mx) : 1.19129
Cl(Nf) : .8 Cl(Nx) : .07

Item no. : F#4-WEST S/o no. : .190

****

eometric parameters

Gamma = Rm/T = 35.905 / .19
= 188.9737

á1x = Cc/Rm = .1875 / 35.905 = 5.222113E-03
á2x = Cl/Rm = 7.75 / 35.905 = .2158474
áx = á1x/á2x = 5.222113E-03 / .2158474 = 2.419355E-02

á1 : 5.454069E-02 á2 : .0283317 á3 : 1.805565E-02
á4 : 2.112406E-02 á5 : 6.242807E-02 á6 : .1274977

Circumferential stresses :

Membrane due to P (åc1) = Kn(C1x)(P/(Rm(T)))
= 1 (C1x) (0 / (35.905 (.19)))
= 0 psi. (0 psi.)

Bending due to P (åc2) = Kb(C2x)(6(P)/(T^2))
= 1 (C2x) (6 (0) / (.19 ^ 2))
= 0 psi. (0 psi.)

Membrane due to Mc (åc3) = Kn(C3)(Mc/((Rm^2)(á)(T)))
= 1 (.1311907) (0 / ((35.905 ^ 2) (1.805565E-02
) (.19)))
= 0 psi.

Bending due to Mc (åc4) = Kb(C4)(6(Mc)/((T^2)(Rm)(á)))
= 1 (.1) (6 (0) / ((.19 ^ 2) (35.905) (
2.112406E-02)))
= 0 psi.

Membrane due to Ml (åc5) = Kn(C5)(Ml/((Rm^2)(á)(T)))
= 1 (16.4961) (-17600 / ((35.905 ^ 2) (
6.242807E-02) (.19)))
=-18988 psi.

Bending due to Ml (åc6) = Kb(C6)(6(Ml)/((T^2)(Rm)(á)))
= 1 (1.585486E-02) (6 (-17600) / ((.19 ^ 2) (
35.905) (.1274977)))
=-10132 psi.

Press. stress (åc7) = Dp(Rm)(Iv)/(T)
= 2 (35.905) (1) / (.19)
= 378 psi.

Stresses	Au	Al	Bu	Bl	Cu	Cl	Du	Dl
-åc 1	0	0	0	0	0	0	0	0
-åc 2	0	0	0	0	0	0	0	0
-åc 3	0	0	0	0	0	0	0	0
-åc 4	0	0	0	0	0	0	0	0
-åc 5	18988	18988	-18988	-18988	0	0	0	0
-åc 6	10132	-10132	-10132	10132	0	0	0	0
-åc	29120	8856	-29120	-8856	0	0	0	0
-åp	378	378	378	378	378	378	378	378

-âct	29498	9234	-28742	-8478	378	378	378	378

Item no. : F#4-WEST S/o no. : .190

****

ometric parameters

Gamma = 188.9737

áx1 : 5.222113E-03
áx2 : .2158474
áx : 2.419355E-02

á1 : 4.230982E-02 á2 : 4.449391E-02 á3 : 1.805565E-02
á4 : 2.594194E-02 á5 : 6.242807E-02 á6 : 7.436996E-02

Longitudinal stresses :

Membrane due to P (ål1) = Kn(L1x)(P/(Rm(T)))
= 1 (L1x) (0 / (35.905 (.19)))
= 0 psi. (0 psi.)

Bending due to P (ål2) = Kb(L2x)(6(P)/(T^2))
= 1 (L2x) (6 (0) / (.19 ^ 2))
= 0 psi. (0 psi.)

Membrane due to Mc (ål3) = Kn(L3)(Mc/((Rm^2)(á)(T)))
= 1 (1.104026) (0 / ((35.905 ^ 2) (1.805565E-02
) (.19)))
= 0 psi.

ending due to Mc (ål4) = Kb(L4)(6(Mc)/((T^2)(Rm)(á)))
= 1 (.06) (6 (0) / ((.19 ^ 2) (35.905) (
2.594194E-02)))
= 0 psi.

Membrane due to Ml (ål5) = Kn(L5)(Ml/((Rm^2)(á)(T)))
= 1 (.4582869) (-17600 / ((35.905 ^ 2) (
6.242807E-02) (.19)))
=-528 psi.

Bending due to Ml (ål6) = Kb(L6)(6(Ml)/((T^2)(Rm)(á)))
= 1 (.0473144) (6 (-17600) / ((.19 ^ 2) (35.905
) (7.436996E-02)))
=-51833 psi.

Press. stress (ål7) = Dp(Rm)(Iv)/(2(T))
= 2 (35.905) (1) / (2 (.19))
= 189 psi.

Stresses	Au	Al	Bu	Bl	Cu	Cl	Du	Dl
-ål 1	0	0	0	0	0	0	0	0
-ål 2	0	0	0	0	0	0	0	0
-ål 3	0	0	0	0	0	0	0	0
-ål 4	0	0	0	0	0	0	0	0
-ål 5	528	528	-528	-528	0	0	0	0
-ål 6	51833	-51833	-51833	51833	0	0	0	0
-ål	52361	-51305	-52361	51305	0	0	0	0
-åp	189	189	189	189	189	189	189	189

-ålt	52550	-51116	-52172	51494	189	189	189	189

Item no. : F#4-WEST S/o no. : .190

****

Shear stresses :

Shear due to Vl (ås1) = Vl/(4(Cl)(T))
= 880 / (4 (7.75) (.19))
= 149 psi.

Shear due to Vc (ås2) = Vc/(4(Cc)(T))
= 0 / (4 (.1875) (.19))
= 0 psi.

Shear due to Mt (ås3) = 0 psi.

Stresses	Au	Al	Bu	Bl	Cu	Cl	Du	Dl
-ås 1	0	0	0	0	-149	-149	149	149
-ås 2	0	0	0	0	0	0	0	0
-ås 3	0	0	0	0	0	0	0	0
-åst	0	0	0	0	-149	-149	149	149

Combined stress intensity :

- When åst = 0

å (comb.) = The larger of :
1) åct
2) ålt
3) ålt - åct

- When åst <> 0

å (comb.) = The larger of :
1) 0.5[ålt+åct+Sqr.((ålt-åct)^2+4(åst^2))]
2) 0.5[ålt+åct-Sqr.((ålt-åct)^2+4(åst^2))]
3) Sqr.((ålt-åct)^2+4(åst^2)))

Stresses	Au	Al	Bu	Bl	Cu	Cl	Du	Dl
-ås (comb.)	52550	-60351	-52173	59972	460	460	460	460

STEARNS-ROGER DIV.¶ TRANSFORMATION OF COORDINATES PROGRAM

DATE 12-15-1994
TIME 11:58:49

FURNACE #4 - WEST POT
JOINT #6 - LOAD #8
(DL + SEISMIC) $S_M = 1.1 \times S_m$ $S_s = 3 \times S_m$

VERTICAL VESSEL

NOZZLE ORIENTATION = 347.47 DEG

PIPING LOADS :

FX0 =	180.00 LBS	MX0 =	1746.67 FT-LBS
FY0 =	1020.00 LBS	MY0 =	-100.83 FT-LBS
FZ0 =	-200.00 LBS	MZ0 =	-0.83 FT-LBS

TRANSLATION OF ROTATED LOADS = 0.00 IN

SECONDARY ROTATION AROUND HORIZONTAL = 0.00 DEG

ROTATED AND/OR TRANSLATED LOADS :

P (Z) =	0.16 KIPS	MC(Y) =	-1.21 IN-KIPS
VC(X) =	-0.22 KIPS	ML(X) =	-20.46 IN-KIPS
VL(Y) =	1.02 KIPS	MT(Z) =	-4.54 IN-KIPS

****

PRESSURE VESSEL DESIGN PRO CORP.
HOUSTON TX

****

--- COMPUTATION OF LOCAL STRESSES ---

CUSTOMER NAME : FMC CORP

P.O. NO. : 9353.001

ITEM NO. : F#4-WEST S/O NO. : .375

DESIGNER NAME : M.SCHULTZ DATE : 12-20-1994

****

--- Stresses in Cylindrical Shell ---

Attachment Mk. : JT6LD8

M.A.W.P. : 2 psi.
Des. temp. : 100 deg. F

Vessel

Cyl. ID. : 71.25 in. Cyl. mean rad. : 35.8125 in. (corr.)
Cyl. thk. : .375 in. (.375 in. (corr.))
Material : SA 516 70
Allow. stress : 17500 psi.

Attachment

Shape : Rectangular
Cl : 7.75 in.
Cc : .1875 in.

Loads & Moments

Radial load P : 160 lb.
Shear load Vc :-220 lb.
Shear load Vl : 1020 lb.
Moment Mc :-1210 in.-lb.
Moment Ml :-20460 in.-lb.
Moment Mt :-4540 in.-lb.

Stress coefficient factors

Kn : 1	Kb : 1	Iv : 1	
C1a : 16.4399	C1b : 16.78083	C2a : .218978	C2b : .1604909
C3 : 7.754372E-02	C4 : .1009	C5 : 7.252811	C6 : 2.568189E-02
L1a : 17.85809	L1b : 17.25823	L2a : .1679735	L2b : .1235527
L3 : .3252309	L4 : .06	L5 : .6576346	L6 : 6.549262E-02
K1(Nf) : .91	K1(Nx) : 1.68	K1(Mf) : 1.76	K1(Mx) : 1.2
K2(Nf) : 1.48	K2(Nx) : 1.2	K2(Mf) : .88	K2(Mx) : 1.25
Kc(é) : 1.005836	Kc(Mf) : 1.278839	Kc(Mx) : 1.646668	
Cc(Nf) : .15	Cc(Nx) : .44		

Kl(é) : 1.334016 Kl(Mf) : 2.069142 Kl(Mx) : 1.198229
Cl(Nf) : .77 Cl(Nx) : .24

Item no. : F#4-WEST S/o no. : .375

****

Geometric parameters

Gamma = Rm/T = 35.8125 / .375
= 95.5

á1x = Cc/Rm = .1875 / 35.8125 = 5.235602E-03
á2x = Cl/Rm = 7.75 / 35.8125 = .2164049
áx = á1x/á2x = 5.235602E-03 / .2164049 = 2.419355E-02

á1 : 5.468157E-02 á2 : 2.840488E-02 á3 : 1.810228E-02
á4 : .0231499 á5 : 6.258932E-02 á6 : .1295062

Circumferential stresses :

Membrane due to P (åc1) = Kn(C1x)(P/(Rm(T)))
= 1 (C1x) (160 / (35.8125 (.375)))
= 196 psi. (200 psi.)

Bending due to P (åc2) = Kb(C2x)(6(P)/(T^2))
= 1 (C2x) (6 (160) / (.375 ^ 2))
= 1495 psi. (1096 psi.)

Membrane due to Mc (åc3) = Kn(C3)(Mc/((Rm^2)(á)(T)))
= 1 (7.754372E-02) (-1210 / ((35.8125 ^ 2) (1.810228E-02) (.375)))
=-12 psi.

Bending due to Mc (åc4) = Kb(C4)(6(Mc)/((T^2)(Rm)(á)))
= 1 (.1009) (6 (-1210) / ((.375 ^ 2) (35.8125) (.0231499)))
=-6284 psi.

Membrane due to Ml (åc5) = Kn(C5)(Ml/((Rm^2)(á)(T)))
= 1 (7.252811) (-20460 / ((35.8125 ^ 2) (6.258932E-02) (.375)))
=-4931 psi.

Bending due to Ml (åc6) = Kb(C6)(6(Ml)/((T^2)(Rm)(á)))
= 1 (2.568189E-02) (6 (-20460) / ((.375 ^ 2) (35.8125) (.1295062)))
=-4835 psi.

Press. stress (åc7) = Dp(Rm)(Iv)/(T)
= 2 (35.8125) (1) / (.375)
= 191 psi.

Stresses	Au	Al	Bu	Bl	Cu	Cl	Du	Dl
-åc 1	-200	-200	-200	-200	-196	-196	-196	-196
-åc 2	-1096	1096	-1096	1096	-1495	1495	-1495	1495
-åc 3	0	0	0	0	12	12	-12	-12
-åc 4	0	0	0	0	6284	-6284	-6284	6284
åc 5	4931	4931	-4931	-4931	0	0	0	0
-åc 6	4835	-4835	-4835	4835	0	0	0	0
-åc	8470	992	-11062	800	4605	-4973	-7987	7571
-åp	191	191	191	191	191	191	191	191

-åct	8661	1183	-10871	991	4796	-4782	-7796	7762

Item no. : F#4-WEST S/o no. : .375

****

Geometric parameters

Gamma = 95.5

áx1 : 5.235602E-03
áx2 : .2164049
áx : 2.419355E-02

á1 : 4.241911E-02 á2 : 4.460884E-02 á3 : 1.810228E-02
á4 : 2.980845E-02 á5 : 6.258932E-02 á6 : 7.499635E-02

Longitudinal stresses :

Membrane due to P (ål1) = Kn(L1x)(P/(Rm(T)))
= 1 (L1x) (160 / (35.8125 (.375)))
= 213 psi. (206 psi.)

Bending due to P (ål2) = Kb(L2x)(6(P)/(T^2))
= 1 (L2x) (6 (160) / (.375 ^ 2))
= 1147 psi. (843 psi.)

Membrane due to Mc (ål3) = Kn(L3)(Mc/((Rm^2)(á)(T)))
= 1 (.3252309) (-1210 / ((35.8125 ^ 2) (1.810228E-02) (.375)))
=-46 psi.

Bending due to Mc (ål4) = Kb(L4)(6(Mc)/((T^2)(Rm)(á)))
= 1 (.06) (6 (-1210) / ((.375 ^ 2) (35.8125) (2.980845E-02)))
=-2903 psi.

Membrane due to Ml (ål5) = Kn(L5)(Ml/((Rm^2)(á)(T)))
= 1 (.6576346) (-20460 / ((35.8125 ^ 2) (6.258932E-02) (.375)))
=-448 psi.

Bending due to Ml (ål6) = Kb(L6)(6(Ml)/((T^2)(Rm)(á)))
= 1 (6.549262E-02) (6 (-20460) / ((.375 ^ 2) (35.8125) (7.499635E-02)))
=-21288 psi.

Press. stress (ål7) = Dp(Rm)(Iv)/(2(T))
= 2 (35.8125) (1) / (2 (.375))
= 96 psi.

Stresses	Au	Al	Bu	Bl	Cu	Cl	Du	Dl
-ål 1	-213	-213	-213	-213	-206	-206	-206	-206
-ål 2	-1147	1147	-1147	1147	-843	843	-843	843
-ål 3	0	0	0	0	46	46	-46	-46
-ål 4	0	0	0	0	2903	-2903	-2903	2903
-ål 5	448	448	-448	-448	0	0	0	0
-ål 6	21288	-21288	-21288	21288	0	0	0	0
-ål	20376	-19906	-23096	21774	1900	-2220	-3998	3494
-åp	96	96	96	96	96	96	96	96

-ält	20472	-19810	-23000	21870	1996	-2124	-3902	3590

Item no. : F#4-WEST S/o no. : .375

****

Shear stresses :

Shear due to Vl (ås1) = Vl/(4(Cl)(T))
= 1020 / (4 (7.75) (.375))
= 88 psi.

Shear due to Vc (ås2) = Vc/(4(Cc)(T))
=-220 / (4 (.1875) (.375))
=-783 psi.

Shear due to Mt (ås3) = 0 psi.

Stresses	Au	Al	Bu	Bl	Cu	Cl	Du	Dl
-ås 1	0	0	0	0	-88	-88	88	88
-ås 2	-783	-783	783	783	0	0	0	0
-ås 3	0	0	0	0	0	0	0	0
-åst	-783	-783	783	783	-88	-88	88	88

Combined stress intensity :

- When åst = 0

å (comb.) = The larger of :
1) åct
2) ålt
3) ålt - åct

- When åst <> 0

å (comb.) = The larger of :
1) 0.5[ålt+åct+Sqr.((ålt-åct)^2+4(åst^2))]
2) 0.5[ålt+åct-Sqr.((ålt-åct)^2+4(åst^2))]
3) Sqr.((ålt-åct)^2+4(åst^2)))

Stresses	Au	Al	Bu	Bl	Cu	Cl	Du	Dl
-ås (comb.)	20524	21051	-23051	21899	4799	-4786	-7799	7764

****

PRESSURE VESSEL DESIGN PRO CORP.
HOUSTON TX

****

--- COMPUTATION OF LOCAL STRESSES ---

CUSTOMER NAME : FMC CORP

P.O. NO. : 9353.001

ITEM NO. : F#4-WEST S/O NO. : .22

DESIGNER NAME : M.SCHULTZ DATE : 01-25-1995

****

--- Stresses in Cylindrical Shell ---

Attachment Mk. : JT6LD8

M.A.W.P. : 2 psi.
Des. temp. : 100 deg. F

Vessel

Cyl. ID. : 71.57 in. Cyl. mean rad. : 35.895 in. (corr.)
Cyl. thk. : .22 in. (.22 in. (corr.))
Material : SA 516 70
Allow. stress : 17500 psi.

Attachment

Shape : Rectangular
Cl : 7.75 in.
Cc : .1875 in.

Loads & Moments

Radial load P : 160 lb.
Shear load Vc :-220 lb.
Shear load Vl : 1020 lb.
Moment Mc :-1210 in.-lb.
Moment Ml :-20460 in.-lb.
Moment Mt :-4540 in.-lb.

Stress coefficient factors

Kn : 1	Kb : 1	Iv : 1	
C1a : 25.06905	C1b : 27.051	C2a : .19484	C2b : .1405478
C3 : .105988	C4 : .1	C5 : 13.91269	C6 : 1.780453E-02
L1a : 27.12423	L1b : 28.81219	L2a : .1392084	L2b : 9.925683E-02
L3 : .8488396	L4 : .06	L5 : .3806117	L6 : 5.102649E-02
K1(Nf) : .91	K1(Nx) : 1.68	K1(Mf) : 1.76	K1(Mx) : 1.2
K2(Nf) : 1.48	K2(Nx) : 1.2	K2(Mf) : .88	K2(Mx) : 1.25
Kc(é) : .964193	Kc(Mf) : 1.198505	Kc(Mx) : 1.490405	
Cc(Nf) : .09	Cc(Nx) : .44		

Kl(é) : 1.420715 Kl(Mf) : 2.047351 Kl(Mx) : 1.19129
Cl(Nf) : .8 Cl(Nx) : .07

Item no. : F#4-WEST S/o no. : .22

****

Geometric parameters

Gamma = Rm/T = 35.895 / .22
= 163.1591

á1x = Cc/Rm = .1875 / 35.895 = 5.223569E-03
á2x = Cl/Rm = 7.75 / 35.895 = .2159075
áx = á1x/á2x = 5.223569E-03 / .2159075 = 2.419355E-02

á1 : 5.455589E-02 á2 : 2.833959E-02 á3 : 1.806068E-02
á4 : .0216458 á5 : 6.244545E-02 á6 : .1278478

Circumferential stresses :

Membrane due to P (åc1) = Kn(C1x)(P/(Rm(T)))
= 1 (C1x) (160 / (35.895 (.22)))
= 508 psi. (548 psi.)

Bending due to P (åc2) = Kb(C2x)(6(P)/(T^2))
= 1 (C2x) (6 (160) / (.22 ^ 2))
= 3865 psi. (2788 psi.)

Membrane due to Mc (åc3) = Kn(C3)(Mc/((Rm^2)(á)(T)))
= 1 (.105988) (-1210 / ((35.895 ^ 2) (1.806068E-02) (.22)))
=-26 psi.

Bending due to Mc (åc4) = Kb(C4)(6(Mc)/((T^2)(Rm)(á)))
= 1 (.1) (6 (-1210) / ((.22 ^ 2) (35.895) (.0216458)))
=-19307 psi.

Membrane due to Ml (åc5) = Kn(C5)(Ml/((Rm^2)(á)(T)))
= 1 (13.91269) (-20460 / ((35.895 ^ 2) (6.244545E-02) (.22)))
=-16082 psi.

Bending due to Ml (åc6) = Kb(C6)(6(Ml)/((T^2)(Rm)(á)))
= 1 (1.780453E-02) (6 (-20460) / ((.22 ^ 2) (35.895) (.1278478)))
=-9841 psi.

Press. stress (åc7) = Dp(Rm)(Iv)/(T)
= 2 (35.895) (1) / (.22)
= 326 psi.

Stresses	Au	Al	Bu	Bl	Cu	Cl	Du	Dl
-åc 1	548	-548	548	-548	-508	-508	-508	-508
-åc 2	-2788	2788	-2788	2788	-3865	3865	-3865	3865
-åc 3	0	0	0	0	26	26	-26	-26
-åc 4	0	0	0	0	19307	-19307	-19307	19307
åc 5	16082	16082	-16082	-16082	0	0	0	0
-åc 6	9841	-9841	-9841	9841	0	0	0	0
-åc	22587	8481	-29259	-4001	14960	-15924	-23706	22638
-åp	326	326	326	326	326	326	326	326

-åct	22913	8807	-28933	-3675	15286	-15598	-23380	22964

Item no. : F#4-WEST S/o no. : .22

****

Geometric parameters

Gamma = 163.1591

áx1 : 5.223569E-03
áx2 : .2159075
áx : 2.419355E-02

á1 : 4.232162E-02 á2 : 4.450631E-02 á3 : 1.806068E-02
á4 : 2.691772E-02 á5 : 6.244545E-02 á6 : 7.439066E-02

Longitudinal stresses :

Membrane due to P (ål1) = Kn(L1x)(P/(Rm(T)))
= 1 (L1x) (160 / (35.895 (.22)))
= 550 psi. (584 psi.)

Bending due to P (ål2) = Kb(L2x)(6(P)/(T^2))
= 1 (L2x) (6 (160) / (.22 ^ 2))
= 2761 psi. (1969 psi.)

Membrane due to Mc (ål3) = Kn(L3)(Mc/((Rm^2)(á)(T)))
= 1 (.8488396) (-1210 / ((35.895 ^ 2) (1.806068E-02) (.22)))
=-202 psi.

Bending due to Mc (ål4) = Kb(L4)(6(Mc)/((T^2)(Rm)(á)))
= 1 (.06) (6 (-1210) / ((.22 ^ 2) (35.895) (2.691772E-02)))
=-9316 psi.

Membrane due to Ml (ål5) = Kn(L5)(Ml/((Rm^2)(á)(T)))
= 1 (.3806117) (-20460 / ((35.895 ^ 2) (6.244545E-02) (.22)))
=-441 psi.

Bending due to Ml (ål6) = Kb(L6)(6(Ml)/((T^2)(Rm)(á)))
= 1 (5.102649E-02) (6 (-20460) / ((.22 ^ 2) (35.895) (7.439066E-02)))
=-48469 psi.

Press. stress (ål7) = Dp(Rm)(Iv)/(2(T))
= 2 (35.895) (1) / (2 (.22))
= 163 psi.

Stresses	Au	Al	Bu	Bl	Cu	Cl	Du	Dl
-ål 1	-550	-550	-550	-550	-584	-584	-584	-584
-ål 2	-2761	2761	-2761	2761	-1969	1969	-1969	1969
-ål 3	0	0	0	0	202	202	-202	-202
-ål 4	0	0	0	0	9316	-9316	-9316	9316
-ål 5	441	441	-441	-441	0	0	0	0
-ål 6	48469	-48469	-48469	48469	0	0	0	0
-ål	45599	-45817	-52221	50239	6965	-7729	-12071	10499
-åp	163	163	163	163	163	163	163	163

-ålt	45762	-45654	-52058	50402	7128	-7566	-11908	10662

Item no. : F#4-WEST S/o no. : .22

****

Shear stresses :

Shear due to Vl (ås1) = Vl/(4(Cl)(T))
= 1020 / (4 (7.75) (.22))
= 150 psi.

Shear due to Vc (ås2) = Vc/(4(Cc)(T))
=-220 / (4 (.1875) (.22))
=-1334 psi.

Shear due to Mt (ås3) = 0 psi.

Stresses	Au	Al	Bu	Bl	Cu	Cl	Du	Dl
-ås 1	0	0	0	0	-150	-150	150	150
-ås 2	-1334	-1334	1334	1334	0	0	0	0
-ås 3	0	0	0	0	0	0	0	0
-åst	-1334	-1334	1334	1334	-150	-150	150	150

Combined stress intensity :

- When åst = 0

å (comb.) = The larger of :
1) åct
2) ålt
3) ålt - åct

- When åst <> 0

å (comb.) = The larger of :
1) 0.5[ålt+åct+Sqr.((ålt-åct)^2+4(åst^2))]
2) 0.5[ålt+åct-Sqr.((ålt-åct)^2+4(åst^2))]
3) Sqr.((ålt-åct)^2+4(åst^2)))

Stresses	Au	Al	Bu	Bl	Cu	Cl	Du	Dl
-ås (comb.)	45840	54526	-52136	54143	15289	-15602	-23383	22966

APPENDIX 3
INSPECTION REPORTS

APPENDIX 3 INSPECTION REPORTS

ULTRASONIC INSPECTION REPORTS

Furnace # 4, East Slurry Pot, V-4213, UltraPIPE Inspection Data Management, 2/2/99
Furnace # 4, West Slurry Pot, V-4214, UltraPIPE Inspection Data Management, 2/2/99

SLURRY POT LEAK TEST REPORTS

QA/QC Equipment Condition Report, #4 Furnace Precipitators Slurry Pots, August 20, 1999

API LEAK TEST PROCEDURE

Guide for Inspection of Refinery Equipment, Chapter XIII-Atmospheric and Low-Pressure Storage Tanks, 4th Edition, April 1981; Section 13.4.5 Testing of Tanks.

FMC CORPORATION
POCATELLO, ID
QA/QC GROUP
UltraPIPE Inspection Data Management

Corrosion Monitoring Eq/Circ ID Analysis Report Report Date: 2/2/99

(Report in Inches, Corrosion Rates in MPY)
Analysis: Statistical/Straight Line

AREA: FURNACE
Eq/Circ ID: 4FCE E SLURY POT V-4213
Eq Type: VESSEL
Class: 1
RBI:
Design Code: S8/D1

Flange Rating: 285 lb/
Design Pressure: 6 lb/in²
Design Temperature: 300 °F

Description: #4 FURNACE E SLURRY TANK

TML No.	Location Desc	Ctn TML	First Survey Thick	Nt	First Date	Near Survey Thick	Nt	Near Date	Last Survey Thick	Nt	Last Date	Shrt Term Rate	Long Term Rate	Best Rate	Retirement Thickness		Rep TML CR	TML Retirement Date	TML Inspection Date
1.01	N. INLET NOZZLE	N	0.500	NM	1/1/92			N/A	0.418		1/28/99	N/A	12	N/A	0.187	S	12	3/9/16	1/28/04
1.02	E. INLET NOZZLE	N	0.500	NM	1/1/92			N/A	0.500		1/28/99	N/A	0	N/A	0.187	S	1	4/5/22	1/28/04
1.03	S. INLET NOZZLE	N	0.500	NM	1/1/92			N/A	0.412		1/28/99	N/A	12	N/A	0.187	S	12	9/28/15	1/28/04
1.04	W. INLET NOZZLE	N	0.500	NM	1/1/92			N/A	0.406		1/28/99	N/A	13	N/A	0.187	S	13	4/19/15	1/28/04
2.01	N. 6" BYPASS NOZ	N	0.432	NM	1/1/92			N/A	0.340		1/28/99	N/A	13	N/A	0.125	S	13	1/1/15	1/28/04
2.02	E. 6" BYPASS NOZ	N	0.432	NM	1/1/92			N/A	0.375		1/28/99	N/A	8	N/A	0.125	S	8	8/5/17	1/28/04
2.03	S. 6" BYPASS NOZ	N	0.432	NM	1/1/92			N/A	0.366		1/28/99	N/A	9	N/A	0.125	S	9	12/4/16	1/28/04
2.04	W. 6" BYPASS NOZ	N	0.432	NM	1/1/92			N/A	0.349		1/28/99	N/A	12	N/A	0.125	S	12	9/1/15	1/28/04
3.01	N. SLRY MIX NOZ	N	0.375	NM	1/1/92			N/A	0.341		1/28/99	N/A	5	N/A	0.187	S	5	6/26/10	1/28/04
3.02	E. SLRY MIX NOZ	N	0.375	NM	1/1/92			N/A	0.374		1/28/99	N/A	0	N/A	0.187	S	1	12/4/12	1/28/04
3.03	S. SLRY MIX NOZ	N	0.375	NM	1/1/92			N/A	0.368		1/28/99	N/A	1	N/A	0.187	S	1	6/25/12	1/28/04
3.04	W. SLRY MIX NOZ	N	0.375	NM	1/1/92			N/A	0.340		1/28/99	N/A	5	N/A	0.187	S	5	5/30/10	1/28/04
4.01	N. TOP HEAD	N	0.375	NM	1/1/92			N/A	0.370		1/28/99	N/A	1	N/A	0.200	S	1	9/1/11	1/28/04
4.02	E. TOP HEAD	N	0.375	NM	1/1/92			N/A	0.371		1/28/99	N/A	1	N/A	0.200	S	1	9/28/11	1/28/04
4.03	S. TOP HEAD	N	0.375	NM	1/1/92			N/A	0.366		1/28/99	N/A	1	N/A	0.200	S	1	5/16/11	1/28/04
4.04	W. TOP HEAD	N	0.375	NM	1/1/92			N/A	0.359		1/28/99	N/A	2	N/A	0.200	S	2	11/8/10	1/28/04
5.01	N. TOP SHELL	N	0.375	NM	1/1/92			N/A	0.374		1/28/99	N/A	0	N/A	0.200	S	1	12/19/11	1/28/04
5.02	E. TOP SHELL	N	0.375	NM	1/1/92			N/A	0.342		1/28/99	N/A	5	N/A	0.200	S	5	8/5/09	1/28/04
5.03	S. TOP SHELL	N	0.375	NM	1/1/92			N/A	0.325		1/28/99	N/A	7	N/A	0.200	S	7	5/2/08	9/15/03
5.04	W. TOP SHELL	N	0.375	NM	1/1/92			N/A	0.377		1/28/99	N/A	0	N/A	0.200	S	1	3/9/12	1/28/04
6.01	N. BTM SHELL	N	0.375	NM	1/1/92			N/A	0.381		1/28/99	N/A	0	N/A	0.200	S	1	6/25/12	1/28/04
6.02	E. BTM SHELL	N	0.375	NM	1/1/92			N/A	0.363		1/28/99	N/A	2	N/A	0.200	S	2	2/24/11	1/28/04
6.03	S. BTM SHELL	N	0.375	NM	1/1/92			N/A	0.289		1/28/99	N/A	12	N/A	0.200	S	12	9/1/05	5/16/02
6.04	W. BTM SHELL	N	0.375	NM	1/1/92			N/A	0.309		1/28/99	N/A	9	N/A	0.200	S	9	2/24/07	2/11/03
7.01	N. BTM HEAD	N	0.375	NM	1/1/92			N/A	0.314		1/28/99	N/A	9	N/A	0.200	S	9	7/9/07	4/19/03

FMC CORPORATION
POCATELLO, ID
QA/QC GROUP
UltraPIPE Inspection Data Management

Corrosion Monitoring Eq/Circ ID Analysis Report

Report Date: 2/2/99

(Report in Inches, Corrosion Rates in MPY)
Analysis: Statistical/Straight Line

AREA: FURNACE
Eq/Circ ID: 4FCE E SLURY POT
Eq Type: VESSEL
Class: 1
RBI:
Design Code: S8/D1

Flange Rating: 285 lb/
Design Pressure: 6 lb/in²
Design Temperature: 300 °F

Description: #4 FURNACE E SLURRY TANK

TML No.	Location Desc	Ctn TML	First Survey Thick	Nt	First Date	Near Survey Thick	Nt	Near Date	Last Survey Thick	Nt	Last Date	Shrt Term Rate	Long Term Rate	Best Rate	Retirement Thickness		Rep TML CR	TML Retirement Date	TML Inspection Date
7.02	E. BTM HEAD	N	0.375	NM	1/1/92			N/A	0.283		1/28/99	N/A	13	N/A	0.200	S	13	3/23/05	2/24/02
7.03	S. BTM HEAD	N	0.375	NM	1/1/92			N/A	0.283		1/28/99	N/A	13	N/A	0.200	S	13	3/23/05	2/24/02
7.04	W. BTM HEAD	Y *	0.375	NM	1/1/92			N/A	0.255		1/28/99	N/A	17	N/A	0.200	S	17	4/24/02	9/10/00
8.01	N. OUTLET NOZ	N	0.365	NM	1/1/92			N/A	0.282		1/28/99	N/A	12	N/A	0.190	S	12	11/21/05	6/26/02
8.02	E. OUTLET NOZ	N	0.365	NM	1/1/92			N/A	0.266		1/28/99	N/A	14	N/A	0.190	S	14	7/3/04	10/16/01
8.03	S. OUTLET NOZ	N	0.365	NM	1/1/92			N/A	0.280		1/28/99	N/A	12	N/A	0.190	S	12	9/28/05	5/30/02
8.04	W. OUTLET NOZ	N	0.365	NM	1/1/92			N/A	0.288		1/28/99	N/A	11	N/A	0.190	S	11	5/2/06	9/15/02

FMC CORPORATION
POCATELLO, ID
QA/QC GROUP
UltraPIPE Inspection Data Management

Report Date: 2/2/99

(Report in Inches, Corrosion Rates in MPY)
Analysis: Statistical/Straight Line

AREA: FURNACE
Eq/Circ ID: 4FCE E SLURY POT
Design Code: S8/D1
Eq Type: VESSEL
Class: 1
RBI:

Flange Rating: 285 lb/
Design Pressure: 6 lb/in²
Design Temperature: 300 °F

Description: #4 FURNACE E SLURRY TANK

TML Corrosion Rates are each the Maximum of:

(A) -- Calculated Corrosion Rates x 1.00	:	Varies
(B) -- Default Corrosion Rate	:	1.0 MPY

Representative Corrosion Rate is the Maximum of:

(A) -- Average Corrosion Rate x 1.10	:	8.1 MPY
(B) -- Average Max 25.0% of TMLs, Min of 2	:	13.5 MPY
(C) -- Formula Corrosion Rate (Sigma = 1.28)	:	9.1 MPY
(D) -- Default Corrosion Rate	:	2.0 MPY

Representative Corrosion Rate = 13.5 MPY

TML thickness readings taken above 150.0 °F have been compensated by 1% per 100.0 °F
TML thickness readings have been compensated for growths.

TML Life calculations are based on the maximum of the Rep. TML CR and the RCR using Short Term, Long Term, and Best Fit Corrosion Rates.

Nominal thickness is used for TML corrosion rate calculations with less than 3 surveys.

TML Inspection dates are:
(A) -- Minimum(TML Life / 2.00, 5.0 years)

Eq/Circ ID Estimated life = 3.2 years.
(Estimated Life is based on the average of the earliest 1 TML retirement dates.)

Predicted Eq/Circ ID Retirement date is 04/24/2002

Recommended Eq/Circ U/T Inspection Date is 09/10/2000
U/T Inspection Date is the minimum(Remaining life / 2.0, 5.0 years).

Caution TML Logic: TML Corrosion Rate > 15.00 MPY .OR. TML Remaining Life < 1 Years.
There are 1 Caution TMLs in this Eq/Circ ID.

FMC CORPORATION
POCATELLO, ID
QA/QC GROUP
UltraPIPE Inspection Data Management

Corrosion Monitoring Eq/Circ ID Analysis Report

Report Date: 2/2/99

(Report in Inches, Corrosion Rates in MPY)
Analysis: Statistical/Straight Line

AREA: FURNACE
Eq/Circ ID: 4FCE W SLURY POT V-4214
Eq Type: VESSEL
Class: 1
RBI:
Design Code: S8/D1

Flange Rating: 285 lb/
Design Pressure: 6 lb/in²
Design Temperature: 300 °F

Description: #4 FURNACE W SLURRY TANK

TML No.	Location Desc	Ctn TML	First Survey Thick	Nt	First Date	Near Survey Thick	Nt	Near Date	Last Survey Thick	Nt	Last Date	Shrt Term Rate	Long Term Rate	Best Rate	Retirement Thickness		Rep TML CR	TML Retirement Date	TML Inspection Date
1.01	N. INLET NOZZLE	Y	0.500	NM	1/1/92			N/A	0.320		1/28/99	N/A	25	N/A	0.187	S	25	12/6/03	7/3/01
1.02	E. INLET NOZZLE	Y	0.500	NM	1/1/92			N/A	0.312		1/28/99	N/A	27	N/A	0.187	S	27	8/21/03	5/10/01
1.03	S. INLET NOZZLE	Y	0.500	NM	1/1/92			N/A	0.310		1/28/99	N/A	27	N/A	0.187	S	27	7/26/03	4/27/01
1.04	W. INLET NOZZLE	Y	0.500	NM	1/1/92			N/A	0.346		1/28/99	N/A	22	N/A	0.187	S	22	11/17/04	12/23/01
2.01	N. 6" BYPASS NOZ	Y	0.432	NM	1/1/92			N/A	0.230		1/28/99	N/A	29	N/A	0.125	S	29	9/30/02	11/29/00
2.02	E. 6" BYPASS NOZ	Y *	0.432	NM	1/1/92			N/A	0.213		1/28/99	N/A	31	N/A	0.125	S	31	11/30/01	6/30/00
2.03	S 6" BYPASS NOZ	Y	0.432	NM	1/1/92			N/A	0.214		1/28/99	N/A	31	N/A	0.125	S	31	12/18/01	7/9/00
2.04	W. 6" BYPASS NOZ	Y	0.432	NM	1/1/92			N/A	0.234		1/28/99	N/A	28	N/A	0.125	S	28	12/20/02	1/8/01
3.01	N. SLRY MIX NOZ	N	0.375	NM	1/1/92			N/A	0.365		1/28/99	N/A	1	N/A	0.187	S	1	7/28/05	4/29/02
3.02	E. SLRY MIX NOZ	N	0.375	NM	1/1/92			N/A	0.359		1/28/99	N/A	2	N/A	0.187	S	2	5/9/05	3/20/02
3.03	S. SLRY MIX NOZ	N	0.375	NM	1/1/92			N/A	0.359		1/28/99	N/A	2	N/A	0.187	S	2	5/9/05	3/20/02
3.04	W. SLRY MIX NOZ	N	0.375	NM	1/1/92			N/A	0.368		1/28/99	N/A	1	N/A	0.187	S	1	9/6/05	5/19/02
4.01	N. TOP HEAD	N	0.375	NM	1/1/92			N/A	0.347		1/28/99	N/A	4	N/A	0.200	S	4	6/10/04	10/4/01
4.02	E. TOP HEAD	N	0.375	NM	1/1/92			N/A	0.381		1/28/99	N/A	0	N/A	0.200	S	1	9/6/05	5/19/02
4.03	S. TOP HEAD	N	0.375	NM	1/1/92			N/A	0.375		1/28/99	N/A	0	N/A	0.200	S	1	6/18/05	4/9/02
4.04	W. TOP HEAD	N	0.375	NM	1/1/92			N/A	0.344		1/28/99	N/A	4	N/A	0.200	S	4	5/1/04	9/14/01
5.01	N. TOP SHELL	N	0.375	NM	1/1/92			N/A	0.349		1/28/99	N/A	4	N/A	0.200	S	4	7/6/04	10/17/01
5.02	E. TOP SHELL	N	0.375	NM	1/1/92			N/A	0.371		1/28/99	N/A	1	N/A	0.200	S	1	4/25/05	3/13/02
5.03	S. TOP SHELL	N	0.375	NM	1/1/92			N/A	0.381		1/28/99	N/A	0	N/A	0.200	S	1	9/6/05	5/19/02
5.04	W. TOP SHELL	N	0.375	NM	1/1/92			N/A	0.363		1/28/99	N/A	2	N/A	0.200	S	2	1/9/05	1/19/02
6.01	N. BTM SHELL	N	0.375	NM	1/1/92			N/A	0.372		1/28/99	N/A	0	N/A	0.200	S	1	5/9/05	3/20/02
6.02	E. BTM SHELL	N	0.375	NM	1/1/92			N/A	0.379		1/28/99	N/A	0	N/A	0.200	S	1	8/10/05	5/5/02
6.03	S. BTM SHELL	N	0.375	NM	1/1/92			N/A	0.378		1/28/99	N/A	0	N/A	0.200	S	1	7/28/05	4/29/02
6.04	W. BTM SHELL	N	0.375	NM	1/1/92			N/A	0.376		1/28/99	N/A	0	N/A	0.200	S	1	7/1/05	4/15/02
7.01	N. BTM HEAD	N	0.375	NM	1/1/92			N/A	0.375		1/28/99	N/A	0	N/A	0.200	S	1	6/18/05	4/9/02

FMC CORPORATION
POCATELLO, ID
QA/QC GROUP
UltraPIPE Inspection Data Management

Corrosion Monitoring Eq/Circ ID Analysis Report

Report Date: 2/2/99

(Report in Inches, Corrosion Rates in MPY)
Analysis: Statistical/Straight Line

AREA: FURNACE
Eq/Circ ID: 4FCE W SLURY POT
Eq Type: VESSEL
Class: 1
RBI:
Design Code: S8/D1

Flange Rating: 285 lb/
Design Pressure: 6 lb/in²
Design Temperature: 300 °F

Description: #4 FURNACE W SLURRY TANK

TML No.	Location Desc	Ctn TML	First Survey Thick	Nt	First Date	Near Survey Thick	Nt	Near Date	Last Survey Thick	Nt	Last Date	Shrt Term Rate	Long Term Rate	Best Rate	Retirement Thickness		Rep TML CR	TML Retirement Date	TML Inspection Date
7.02	E. BTM HEAD	N	0.375	NM	1/1/92			N/A	0.373		1/28/99	N/A	0	N/A	0.200	S	1	5/22/05	3/26/02
7.03	S. BTM HEAD	N	0.375	NM	1/1/92			N/A	0.375		1/28/99	N/A	0	N/A	0.200	S	1	6/18/05	4/9/02
7.04	W. BTM HEAD	N	0.375	NM	1/1/92			N/A	0.371		1/28/99	N/A	1	N/A	0.200	S	1	4/25/05	3/13/02
8.01	N. OUTLET NOZ	N	0.365	NM	1/1/92			N/A	0.331		1/28/99	N/A	5	N/A	0.190	S	5	3/22/04	8/25/01
8.02	E. OUTLET NOZ	N	0.365	NM	1/1/92			N/A	0.313		1/28/99	N/A	7	N/A	0.190	S	7	7/26/03	4/27/01
8.03	S. OUTLET NOZ	N	0.365	NM	1/1/92			N/A	0.332		1/28/99	N/A	5	N/A	0.190	S	5	4/4/04	9/1/01
8.04	W. OUTLET NOZ	N	0.365	NM	1/1/92			N/A	0.310		1/28/99	N/A	8	N/A	0.190	S	8	6/16/03	4/7/01

FMC CORPORATION
POCATELLO, ID
QA/QC GROUP
UltraPIPE Inspection Data Management

Report Date: 2/2/99

(Report in Inches, Corrosion Rates in MPY)
Analysis: Statistical/Straight Line

AREA: FURNACE
Eq/Circ ID: 4FCE W SLURY POT
Design Code: S8/D1
Eq Type: VESSEL
Class: 1
RBI:

Flange Rating: 285 lb/
Design Pressure: 6 lb/in²
Design Temperature: 300 °F

Description: #4 FURNACE W SLURRY TANK

TML Corrosion Rates are each the Maximum of:

(A) -- Calculated Corrosion Rates x 1.00	:	Varies
(B) -- Default Corrosion Rate	:	1.0 MPY

Representative Corrosion Rate is the Maximum of:

(A) -- Average Corrosion Rate x 1.10	:	9.5 MPY
(B) -- Average Max 25.0% of TMLs, Min of 2	:	27.4 MPY
(C) -- Formula Corrosion Rate (Sigma = 1.28)	:	10.5 MPY
(D) -- Default Corrosion Rate	:	2.0 MPY

Representative Corrosion Rate = 27.4 MPY

TML thickness readings taken above 150.0 °F have been compensated by 1% per 100.0 °F
TML thickness readings have been compensated for growths.

TML Life calculations are based on the maximum of the Rep. TML CR and the RCR using Short Term, Long Term, and Best Fit Corrosion Rates.

Nominal thickness is used for TML corrosion rate calculations with less than 3 surveys.

TML Inspection dates are:
(A) -- Minimum(TML Life / 2.00, 5.0 years)

Eq/Circ ID Estimated life = 2.8 years.
(Estimated Life is based on the average of the earliest 1 TML retirement dates.)

Predicted Eq/Circ ID Retirement date is 11/30/2001

Recommended Eq/Circ U/T Inspection Date is 06/29/2000
U/T Inspection Date is the minimum(Remaining life / 2.0, 5.0 years).

Caution TML Logic: TML Corrosion Rate > 15.00 MPY .OR. TML Remaining Life < 1 Years.
There are 8 Caution TMLs in this Eq/Circ ID.

FMC

QA/QC Equipment Condition Report.

To: Richard Brooks

From: Rod Thompson

CC: RLR

Date: August 20, 1999

Re: # 4 Furnace Precipitators Slurry Pots.

---

4 Furnace 1st and 2nd pass Slurry Pots were filled water and checked for leaks 08/19/99. No leaks were detected at this time.

Attached is the Ultra-pipe corrosion report summary of the Ultra-sonic inspection that was completed on these pots 02/11/1999.

4 Furnace 1st pass. Slurry Pot V-4213

TML Inspection date is:
(A) – Minimum(TML Life / 2.00, 5.0 years)

Eq/Circ ID Estimated life = 3.2 years.
(Estimated Life is based on the average of the earliest 1 TML retirement dates.)
Predicted Eq/Circ ID Retirement date is 04/24/2002
Recommended Eq/Circ U/T Inspection Date is 09/10/2000
U/T Inspection Date is the minimum(Remaining life / 2.0, 5.0 years).
Caution TML Logic: TML Corrosion Rate > 15.00 MPY .OR. TML Remaining Life < 1 Years.
There are 1 Caution TMLs in this Eq/Circ ID.

4 Furnace 2nd pass. Slurry Pot V-4214

TML Inspection date is:
(A) – Minimum(TML Life / 2.00, 5.0 years)

Eq/Circ ID Estimated life = 2.8 years.
(Estimated Life is based on the average of the earliest 1 TML retirement dates.)
Predicted Eq/Circ ID Retirement date is 11/30/2001
Recommended Eq/Circ U/T Inspection Date is 06/29/2000
U/T Inspection Date is the minimum(Remaining life / 2.0, 5.0 years).
Caution TML Logic: TML Corrosion Rate > 15.00 MPY .OR. TML Remaining Life < 1 Years.
There are 8 Caution TMLs in this Eq/Circ ID.

Itpm Inspector

Rod Thompson

Guide for Inspection of Refinery Equipment

Chapter XIII—Atmospheric and Low-Pressure Storage Tanks

Refining Department

FOURTH EDITION, APRIL 1981

OFFICIAL PUBLICATION

REG. U.S. PATENT OFFICE

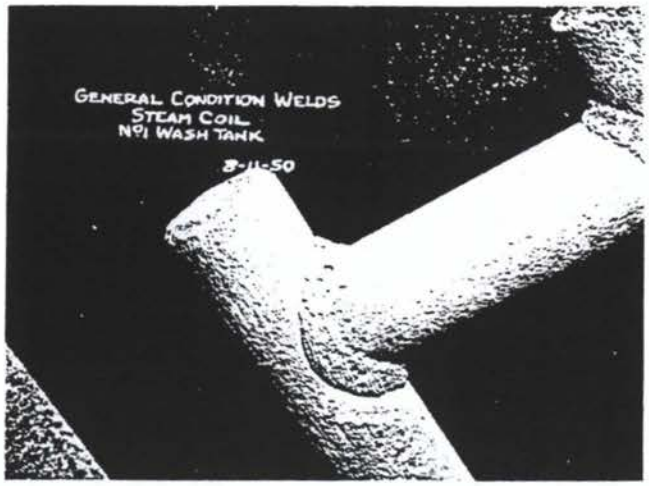

Figure 59—Example of Corrosion of Steam Heating Coil

opened joint. Gasket surfaces of opened flanges should be checked for corrosion, and the flange faces should be checked for distortion by using a flange square. Nozzle thickness can be calculated by measuring the inside and outside diameters. This method avoids breaking the joints. As corrosion may be greater on one side of the nozzle, a visual check for ecentricity of the nozzle interior should accompany these measurements and calculations.

13.4.5 TESTING OF TANKS

When storage tanks are built, they are tested in accordance with the standard to which they were constructed. The same methods later can be used to inspect for leaks and to check repair work. When major repairs or rebuilding have been done, such as the installation of a new tank bottom or replacement of large sections of shell plate, the need for a test should be considered. High quality materials, design details, fabrication procedures, or nondestructive examination may be considered in lieu of testing. If the repairs have not made the tank as strong as a new tank, the water height for the test should be limited in accordance with the lower strength conditions.

The word *testing* as used in this section applies only to the process of filling the tank with a liquid or gaseous fluid, at the appropriate pressure, to test it for strength and leaks.

Atmospheric storage tanks, which are designed to withstand no more than 0.5 pounds per square feet gage pressure over the static pressure of the liquid contained in the tanks, are normally tested only by filling the tanks with water. The strength of the lower portions of a tank is thus tested at a pressure that depends on the depth of water above. All exposed portions of the tank can be checked for leaks; up to the water level even serious leaks in bottoms resting on pads can be detected. For certain high-strength and alloy steels, consideration should be given to water ingredients and contaminants, such as chlorides, to avoid the possibility of stress corrosion cracking (see Chapter II, *"Conditions Causing Deterioration or Failures"*). Consideration should also be given to the notch toughness of the shell material at the air and water temperature existing at the time of the test. A discussion of notch toughness and brittle failures also can be found in Chapter II. If water is not available and if the roof of the tank is reasonably airtight or can be made so, a slight air pressure not exceeding 2 inches of water pressure may be applied to the inside of the tank. This type of test is of very little use as a strength test and is used only in inspection for leaks. Soap solution is applied to the outside surface of all suspected areas of the tank, especially on the seams, so that the air escaping through the leaks will produce soap bubbles, thus disclosing the leaks. Roof seams can be effectively vacuum-tested in the same manner.

Low-pressure storage tanks can be tested in the same manner as atmospheric storage tanks, but at slightly higher pressures, depending upon their design (see API Standard 620).

Pneumatic testing can be used when water or other suitable liquid is unavailable, when a tank is unstable when filled with liquid, or when a trace of water cannot be tolerated in the normally stored product. If a tank is seriously corroded, this method should be avoided; however, if it is necessary to use the method, the greatest caution should be exercised. Inspection for leaks can most easily be made by soaping the outside seams of the tank and looking for soap bubbles, as in atmospheric tanks.

13.4.6 DETERMINATION OF LIMITS

The inspection of storage tanks is much more valuable when the limits of corrosion and other forms of deterioration that can safely be tolerated are known for the tank being inspected. There are two aspects to consider when inspecting a tank: (1) the rate at which deterioration is proceeding, and (2) the safe limit of deterioration. For the most common form of deterioration, metal corrosion, the rate of metal loss in a tank in any given service can be obtained by plotting the metal thickness at two or more inspections against the inspection dates, as shown in Figure 60. An extension of the line drawn through the plotted points will indicate, with reasonable accuracy, the time at which the metal will reach the limit of deterioration. Most other forms of deterioration—such as mechanical damage from wind, cracking of the tank metal, and operating failure of accessories—do not take place at a steady rate; in fact, they are unpredictable. If the safe limit of deterioration is known, knowing how long the tank will take to

APPENDIX 4
PIPING SYSTEM

APPENDIX 4 PIPING SYSTEM

PIPING STANDARDS & SPECIFICATIONS

FMC's Engineering Standards, February 22, 1990
- ES-2-0.0-0 through ES-2-0.4-0, General Information
- ES-2-1-0 For Cold Phossy Water
- ES-2-3-0 For Hot Phossy Water
- ES-2-31-0 For Furnace Precipitator Slurry

FMC Phosphorus Chemicals Division
Pocatello

Interoffice

To Pocatello Engineering Department Standards Distribution

Date February 22, 1990

cc

From Engineering Piping Standards Committee

Subject NEW PIPING MATERIAL STANDARDS

Attached are the new Engineering Piping Standards (ES-2-0.0 through 95).

Please remove the entire Piping section in your Engineering Standards book and insert these new standards.

The General Notes (ES-2-0.1) provide clarification to help understand the new material standards.

All of the plant piping material standards have been revised to comply with ASME/ANSI Code B31.3 "Chemical Plant and Petroleum Refinery Piping".

The new standards apply to all new construction and should be applied to repair work as appropriate.

Work will continue on defining the fabrication, inspection and testing upgrades. As a minimum see ES-2-0.2 through ES-2-0.4.

- Some of the main changes to the material specifications are:
  - o All 1-1/2" and smaller threaded carbon steel pipe will be Sch 80. We currently use only Sch 80 nipples.
  - o Cast iron body valves will be replaced by cast steel bodies in most cases.
- Stores items will be changed to be consistent with the standards.
- Since there are major changes in the standards, meetings are being planned to give an overview and answer questions about the new standards. This will take place by the end of the Second Quarter, 1990.

If you have any questions before the overview meetings, contact one of the Engineering Piping Standards committee members (PSGSchoen, RDPatton, DLHorak, ETSmith, RHMiller, or AJPotzman).

nm

FMC - POCATELLO ENGINEERING STANDARD

Number: ES-2-0.0-0
Original Issue Date: 2/90
Revision Date:
Page: 1 of 2
Approval: WSM/PSS

TITLE: PIPING STANDARDS INDEX

NUMBER	TITLE	CATEGORY
ES-2-0.0-0	Index	
ES-2-0.1-0	General Notes	
ES-2-0.2-0	Category D - Construction Specifications and Notes	
ES-2-0.3-0	General Requirements - Construction Specifications and Notes	
ES-2-0.4-0	Category M - Construction Specifications and Notes	
	WATER	
ES-2-1-0	Cold Phossy Water	GEN
ES-2-2-0	Hot Phossy Water from P_4 Sumps	GEN
ES-2-3-0	Hot Phossy Water	GEN
ES-2-4-0	Fresh Water	D
ES-2-4-0	Industrial Waste Water	D
ES-2-5-0	Potable Water	*
ES-2-7-0	Furnace Cooling Water, Brass Piping	D
ES-2-10-0	Furnace, Calciner & P_4 Dock Scrubber Slurry	GEN
ES-2-35-0	Safety Shower	D
ES-2-52-0	Boiler Feed Water	GEN
	LIQUID PHOSPHORUS, CENTRIFUGE PRODUCT, SLUDGE	
ES-2-20-0	Hot Water Jacketed	M
ES-2-22-0	Non-Jacketed	M
	SLURRY	
ES-2-31-0	Furnace Precipitator Slurry	GEN
ES-2-32-0	Slaked Lime Slurry	GEN
	GASES	
ES-2-4-0	Nitrogen	D
ES-2-4-0	Plant Air	D
ES-2-35-0	Instrument Air	D
ES-2-35-0	Breathing Air	D
ES-2-36-0	CO Gas	M
ES-2-39-0	Natural Gas, Medium Pressure	GEN/*
ES-2-40-0	Natural Gas, Low Pressure	GEN/*
ES-2-41-0	Oxygen	GEN
ES-2-42-0	Inert Gas	GEN
	STEAM	
ES-2-51-0	Steam	D
ES-2-52-0	Superheated Steam	GEN
ES-2-52-0	Boilerhouse Steam	GEN
	MISCELLANEOUS	
ES-2-56-0	Fuel Oil	GEN/*

* See specific standard for code.

TITLE: GENERAL NOTES - PIPING STANDARDS

These notes are written with the intention of giving the user some clarification as to the abbreviations, piping grades, and other information contained within the piping standards. Codes such as ANSI B31.1, ANSI B31.3, NFPA 54/ANSI Z223.1, and others have been used as a basis for development of these piping standards. Copies of these codes are available in the Engineering Department Library and should be consulted when the piping standards do not contain the desired information.

- Most of the piping standards are based on ASME/ANSI B31.3 Chemical Plant and Petroleum Refinery Piping. In this code three piping categories are presented according to hazard.

  Category D Fluid Service - Nonflammable, nontoxic, and not damaging to the human tissues
  - Does not exceed 150 psig
  - Design temperature is between -20 and +366 degrees F

  General Requirements - General fluid, exposure to small quantities will not result in serious irreversible harm

  Category M Fluid Service - Exposure to a small quantity can produce serious irreversible harm to persons on breathing or bodily contact

- Piping is normally specified by ASTM specifications. The following is a brief description of a few common carbon steel pipe specifications. They are listed in order of the "higher quality" pipe first. Generally pipe listed first may be substituted for pipe listed later.

  ASTM A106 Grade B - Seamless carbon steel pipe for high temperature service

  ASTM A53 Type S Grade B - Seamless steel pipe

  ASTM A53 Type E Grade B - Electric-resistance welded steel pipe

  ASTM A53 Type F - Furnace Butt-welded (continuous welded) steel pipe
  - Use only on Category D fluid service

  ASTM A120 - This specification was discontinued in 1988 and replaced by ASTM A53

- For testing piping systems, refer to ES-2-0.2 through ES-2-0.4 or the appropriate code. For ANSI B31.1 or ANSI B31.3, Chapter 6 "Inspection and Examination" includes information on testing.

- The following are abbreviations used throughout the Piping Standards:

ANSI - American National Standards Institute
API - American Petroleum Institute
ASME - The American Society of Mechanical Engineers
ASNT - American Society for Nondestructive Testing
ASTM - American Society for Testing and Materials
AWWA - American Water Works Association
AWS - American Welding Society
MSS - Manufacturers Standardization Society of the Valve and Fitting Industry, Inc.
NFPA - National Fire Protection Association
SAE - Society of Automotive Engineers

BW - Butt weld
CI - Cast iron
CS - Carbon steel
CWP - Cold water pressure
FF - Flat face (flange)
MI - Malleable iron
RF - Raised face (flange)
NPT - National pipe thread
Sch - Schedule
SS - Stainless steel
SW - Socket weld
WOG - Water, oil or gas
WSP - Working steam pressure

CONSTRUCTION SPECIFICATIONS

TITLE: ANSI/ASME B31.3 CATEGORY D FLUIDS
(Non flammable, non toxic, and not damaging to human tissue. 150 psig max. -20 degF to +366 degF)

COMPONENTS: Supplier shall certify that components comply with the designated grades or specifications.

FABRICATION: AND ERECTION Components used in fabrication shall be certified to comply with the designated grades of specifications.

TESTING: Leak testing is required per ANSI/ASME B31.3 Section 345.7. Responsibility for leak testing shall be specified by FMC. An initial service leak test may be performed by gradually increasing the service fluid pressure in steps, starting at 25 psi or less, until design pressure is reached. Hold the pressure at each step long enough to equalize strains and check for leaks.

CONSTRUCTION SPECIFICATIONS

TITLE: ANSI/ASME B31.3 GENERAL REQUIREMENTS FLUIDS
(Exposure to small quantities will not result in serious irreversible harm)

COMPONENTS: Supplier shall certify to FMC that components comply with the designated grades or specifications.

FABRICATION: AND ERECTION Components and fabrication shall be certified to comply with the designated grades or specifications. Fabricator shall supply current records of the welding procedures, welder performance qualifications, and welder identification symbols.

TESTING: Leak testing is required per ANSI/ASME B31.3 Section 345. Responsibility for leak testing shall be specified by FMC.

A hydrostatic leak test may be performed by gradually increasing the water pressure in steps, starting at 25 psig or less, until 150% of the design pressure is reached. Hold the pressure at each step long enough to equalize strains and check for leaks. Piping shall be isolated from vessels and equipment prior to testing. See ANSI/ASME B31.3 Sec 345 for alternate testing techniques.

FMC - POCATELLO ENGINEERING STANDARD

Number: ES-2-0.4-0
Original Issue Date: 2/90
Revision Date:
Page: 1 of 1
Approval: WSM / [illegible]

CONSTRUCTION SPECIFICATION

TITLE: ANSI/ASME B31.3 CATEGORY M FLUIDS
(Exposure to a small quantity can produce serious irreversible harm to persons upon breathing or bodily contact.)

COMPONENTS: Supplier shall certify to FMC that components comply with the designated grades or specifications.

FABRICATION: AND ERECTION Components, fabrication, erection, and examination shall be certified to comply with the designated grades or specifications as well as the requirements of ANSI/ASME B31.3, category M. Fabricator shall maintain and submit current records of the welding and examination procedures, welder and examiner performance qualifications, and welder identification symbols.

TESTING: Leak testing is required per ANSI/ASME B31.3 Section 345. Fabricator shall be responsible for leak testing of fabricated components or assemblies. Responsibility for leak testing of erected lines shall be specified by FMC.

A hydrostatic leak test may be performed by gradually increasing the water pressure in steps, starting at 25 psig or less, until 150% of the design pressure is reached. Hold the pressure at each step long enough to equalize strains and check for leaks. Piping shall be isolated from vessels and equipment prior to testing.

Note: Hydrostatic leak test does <u>not</u> apply to CO lines.

See ANSI/ASME B31.3 Sec 345 for alternate testing techniques.

FMC - POCATELLO ENGINEERING STANDARD

Number: ES-2-1-0
Original Issue Date: 2/90
Revision Date:
Page: 1 of 3
Approval: WSM/PSES

TITLE: COLD PHOSSY WATER

Service and Design:	Cold Phossy Water, Below 100°F and 150 psig. Above ground.
Applicable Codes & Standards:	ANSI B31.3 General Requirements.
Color Code:	Yellow
Construction:	1 1/2" or below - NPT 2" and up - Welded and flanged.
Piping:	1 1/2" or below ANSI B36.10, Sch. 80, ASTM A53 Type E or S, Grade B. 2" and up - ANSI B36.10, Sch. 40, ASTM A53 Type E or S, Grade B Beveled End.
Elbows, Tees. etc.:	1 1/2" or below - Malleable Iron Threaded, Class 300, ANSI B16.3 2" and up - Sch. 40, Buttweld, ANSI B16.9, ASTM A234 Grade WPB
Nipples:	1 1/2" or below - ANSI B36.10, Sch. 80, ASTM A106, Grade B NPT.
Bushings:	1 1/2" or below - 3000# Forged Steel, Hexagon, Screwed, ANSI B16.11, ASTM A105
Plugs:	1 1/2" or below - 3000# Forged Steel Square Head, Solid Plug, ANSI B16.11, ASTM A105
Couplings:	1 1/2" or below - Malleable Iron Threaded, Class 300, ANSI B16.3
Unions:	1 1/2" or below - Malleable Iron Threaded, Class 300, ANSI B16.39, Ground Joint, Bronze to Iron Seat
Thread Compound:	Rector Seal 100W Teflon paste pipe thread Compound
Flanges:	150# Raised Face, Forged Steel ASTM A105, ANSI B16.5. If slip on flanges are used, they must be welded on both sides. (NOTE: Use flat-face flanges when mating with a flat-faced flanged component.)
Flange Guards:	Not normally used.
Gaskets:	ANSI B16.21 Ring gaskets, 1/16" thick, Garlock Blueguard 3400 (Note: For flat-face flanges use full face gaskets.)

Bolting:	ASTM A307 Grade B Heavy Hex Head & Heavy Hex Nuts.
Gate Valves:	1 1/2" and below - 125# Bronze, Screwed, Rising Stem Solid Disc, Screwed Bonnet, Meeting MSS-SP80, Crane #428 - NO SUBSTITUTES! 2" and up - 150# Cast Steel, Flanged, OS&Y 4 bolt Bonnet, Flexible Wedge Disc, Crane #47XU meeting API 600
Check Valves:	1 1/2" and below - 200# Strataflo Model 400 Bronze Body with stainless steel Poppet, Screwed. 2" and up - 150# Cast Steel, Flanged, Swing Check, Crane #147X. ANSI B16.34
Globe Valves:	Not normally used.
Butterfly Valves:	* 3" and over - high performance, double offset stem and disc, wafer style, Class 150, Carbon Steel Body and 316 Stainless Steel Disc, XOMOX Figure 801-B-6-ST1 meeting ANSI B16.34, API 609
Ball Valves:	* 1 1/2" and below-150psi WSP Bronze unibody construction, NPT, 316SS Ball and stem, Durafill seats, low Profile Oval handle. Watts #B6100-SS-02-OL 2" and up - 150# Ductile Iron Body, Flanged, Reinforced TFE seats, SS Trim, McCanna #S 151-DI-R-S6, meeting MSS-SP72
Plug Valves:	2" and up - 150# Flanged, Ductile Iron Body, 316SS Trim, Teflon sleeve and diaphragm, meeting API 593 and ANSI B16.10; Tufline Fig. 067
Other Valves:	Not normally used.
Branch Connections:	Use Tee, Lateral, Cross or 3000# ASTM A105 Forged Steel Integrally Reinforced Branch Connection Fitting (Weld-o-let, thread-o-let, etc.). If branch size is $\leq$ 2" and $\leq$ 1/4 the line size, then a 3000# ASTM A105 Forged steel coupling may be used. Other branch connections must comply with ANSI B31.3 Section 304.3.
Tubing:	Not normally used.
Welding:	Per approved welding procedure. For FMC Maintenance use WPS ASME 111 in accordance with PQT 4111 for 2 1/2" and over with PQT 3111 for 3/4" thru 2".

* Preferred type of valve for this service.

TITLE: COLD PHOSSY WATER

Construction Specifications: See ES-2-0.3

Notes: See ES-2-0.3

FMC - POCATELLO ENGINEERING STANDARD

Number: ES-2-3-0
Original Issue Date: 2/90
Revision Date:
Page: 1 of 3
Approval: WSM / FSS

TITLE: HOT PHOSSY WATER

Service and Design:	Hot Phossy water above 100°F, below 150 psig. Above ground. (For hot phossy water originating from the furnace P_4 sumps see ES-2-2).
Applicable codes & Standards:	ANSI B31.3 General Requirements.
Color Code:	Yellow.
Construction:	1 1/2" or below - NPT. 2" and up - Welded and Flanged.
Piping:	1 1/2" or below - ANSI B36.10, Sch 80, ASTM A53 - Type E or S grade B. Over 2" - ANSI B36.10, Sch 40, ASTM A53 Type E or S Grade B, beveled ends.
Elbows Tees Etc.:	1 1/2" or below - 3000# Forged Steel, ASTM A105 Gr. 2 NPT, ANSI B16.11 2" and up- Buttweld-Schedule 40, ANSI B16.9, ASTM A234 Grade WPB
Nipples:	1 1/2" or below - ANSI B36.10, Schedule 80, ASTM A106, grade B NPT.
Bushings:	1 1/2" or below - 3000# Forged Steel, hexagon, screwed, ANSI B16.11, ASTM A105
Plugs:	1 1/2" or below - 3000# Forged Steel, square head, solid plug, ANSI B16.11, ASTM A105
Couplings:	1 1/2" or below - 3000# Forged Steel, ASTM A105 Gr. 2, ANSI B16.11
Unions:	1 1/2" or below - 3000# Forged Steel, ASTM A105 Gr. 2, Meeting MSS-SP83
Thread Compound:	Rector seal 100W Teflon paste pipe thread compound.
Flanges:	150# raised face, forged steel, ASTM A105, ANSI B16.5 If slip on flanges are used, they must be welded on both sides. (NOTE: Use flat-face flanges when mating with a flat-face flanged component)

Flange Guards:	Ramco teflon "Spra-Gard" to match flange sizes.
Gaskets:	Lamons style WR chlorocarb spiral wound gasket with 316 winding and carbon steel centering ring, meeting API 601.
Bolting:	ASTM A307 Grade B heavy Hex head and heavy hex nuts
Gate Valves:	1 1/2" and below - 125# bronze, screwed, rising stem Solid Disc, screwed bonnet, meeting MSS-SP80, Crane #428 NO SUBSTITUTES 2" and up - 150# cast steel, flanged, OS&Y, flexible wedge disc, 4 bolt bonnet, Crane #47XU, meeting API 600
Check Valves:	Do Not Use
Globe Valves:	Not Normally Used
Butterfly Valves: *	3" and above - High performance, Double offset stem and Disc, wafer style, Class 150, carbon steel body and 316 stainless steel disc, XOMOX FIGURE 801-B-6-FT1, Meeting ANSI B16.34, API 609 & API 607 fire safe
Ball Valves: *	1 1/2" or below threaded - 150 PSI WSP min., NPT Bronze unibody construction 316 stainless steel ball and stem, Durafill seats, Low profile oval handle. Watts B6100-SS-02-OL. 2" and above - 150#, Ductile Iron Body, Flanged, reinforced TFE Seats, SS trim, McCanna S-151-DI-R-S6, meeting MSS-SP72.
Plug Valves:	2" and above - 150# Flanged, Ductile iron body, 316 SS trim, Teflon sleeve and diaphragm, meeting API 593 and ANSI B16.10; Tufline fig. 067.
Other Valves:	Not Normally used.
Branch Connections:	Use Tee, Lateral, Cross or 3000# ASTM A105 Forged steel Integrally reinforced branch connection fitting (weld-o-let, thread-o-let, etc.) If branch size is $\leq$ 2" and $\leq$ 1/4 the line size, then a 3000# ASTM A105 Forged steel coupling may be used. Other branch connections must comply with ANSI B31.3 section 304.3
Tubing:	Not normally used.
Welding:	Per approved welding procedure. For FMC Maintenance use WPS ASME 111 in accordance with PQT 4111 for 2 1/2" and over and PQT 3111 for 3/4" thru 2"

*Preferred type of valve for this service.

TITLE: HOT PHOSSY WATER

Construction
Specifications: See ES-2-0.3

Notes: See ES-2-0.3

TITLE: FURNACE PRECIPITATOR SLURRY

Service and Design:	Furnace Precipitator Slurry - Below 100 psig, Below 328°F.
Applicable Codes & Standards:	ANSI B31.3 General requirements.
Color Code:	Yellow
Construction:	1 1/2" and below - NPT 2" and up - Welded and Flanged
Piping:	All sizes: ANSI B36.10, Sch 80, ASTM A53 Type S, Grade B.
Elbows, Tees. etc.:	1 1/2" and below - 3000# Forged Steel, ASTM A105 GR2, NPT, ANSI B16.11. 2" and up - Buttweld, Sch. 80, ANSI B16.9 ASTM A234 Grade WPB. NOTE: Use Long Radius Elbows whenever possible.
Nipples:	1 1/2" and below - ANSI B36.10, Sch. 80, ASTM A106, Grade WPB.
Bushings:	1 1/2" and below - 3000# Forged Steel, Screwed, Soild Plug, ANSI B16.11, ASTM A105.
Plugs:	1 1/2" and below - 3000# Forged Steel, square head, Soild Plug, ANSI B16.11, ASTM A105.
Couplings:	1 1/2" and below - 3000# Forged Steel, ASTM A105 Grade 2, ANSI B16.11.
Unions:	1 1/2" and below - 3000# Forged Steel,ASTM A105 Grade 2, MSS SP-83.
Thread Compound:	Rector Seal 100W Teflon paste pipe thread compound.
Flanges:	150# Raised Face, Forged Steel, ASTM A105, ANSI B16.5. If slip on flanges are used, they must be welded on both sides. (NOTE: Use Flat face flanges when mating with a flat face flanged component.)
Flange Guards:	Ramco Teflon "Spra-Gard" to match flange size.

Gaskets:	Lamons Style WR Chlorocarb Spiral Wound Gasket, with 316 winding and Carbon Steel Centering Ring, API 601.
Bolting:	ASTM A307, Grade B, Heavy Hex Head with Heavy Hex Nuts.
Gate Valves:	2" and up - #150 Cast Steel, Flanged, OS & Y, Flexible Wedge Disc, 4-Bolt Bonnet, API 600, Crane #47XU. 2" to 8" - 150 PSI CWP Knife Gate Valve, 316 S.S. Body, Seats, Gate and Flanges, Molded Elastomer Packing, ITT Fabri-Valve #37R.
Check Valves:	Do Not Use.
Globe Valves:	Do Not Use.
Butterfly Valves:	Do Not Use.
Ball Valves:	1 1/2" or below - 150# WSP min, NPT, Bronze, Unibody Construction, 316 stainless steel Ball and Stem, Durafill seats, Low Profile Oval Handle, Watts B6100-SS-02-OL. 2" and up - Not Normally Used.
Plug Valves:	Not Normaly Used.
Other Valves:	150# Carbon Steel, API 607 Fire Safe.
Branch Connections:	Use Tee, Lateral, Cross or 3000# Forged ASTM A105 Forged Steel Integrally Reinforced Branch Connection Fitting (Weld-o-let, thread-o-let, etc.) If branch size is ≤ 2" and ≤ 1/4 line size, then 3000# ASTM A105 Forged steel coupling may be used. Other Branch connections must comply with ANSI B31.3 Section 304.3. (NOTE: Branch connections should point up. Use minimum distance possible between header and branch valve.)
Tubing:	Not normally used.
Welding:	Per approved welding procedure. For FMC Maintenance use WPS ASME 111 in accordance with PQT 4111 for NPS 2 1/2" and over and PQT 3111 for NPS 3/4" thru 2".

Construction
Specifications: See ES-2-0.3

Notes: See ES-2-0.3

APPENDIX 5
AUXILIARY EQUIPMENT

APPENDIX 5 AUXILIARY EQUIPMENT

DISCHARGE PUMP
WEMCO Slurry Pump, Model No. 3 x 2 W-C

RECIRCULATION PUMP
Warman Horizontal Centrifugal Slurry Pump, Model No. 3/2 C-AH metal Lined, PDDI, Class 9A

AGITATOR/MIXER
LIGHTNIN Mixer, Model No. 108-VSE-3

ENVIROTECH WEMCO

DIVISION ENVIROTECH CORPORATION
P.O. BOX 15610 · SACRAMENTO, CA 95813
CABLE ADDRESS "WEMACHY"
TEL: (916) 444-7160 · TELEX 377423

WEMCO

SALES ORDER

GSD-102 5M-5-74

MAKE REMITTANCE TO ABOVE

FMC CORPORATION
PHOSPHORUS CHEMICALS DIVISION
P.O. BOX 4111
POCATELLO, ID 83201

FMC CORPORATION
PHOSPHORUS CHEMICALS DIVISION
HIGHWAY 30 WEST OF CITY
POCATELLO, ID 83201

SHIP VIA:
PREPAID ☐ COLLECT ☒
F.O.B. SACRAMENTO, CA.
TERMS: NET 30 DAYS

G ☐ Y ☐ W ☐
1.
2.
3.
4.
5.

DISTRIBUTION: RMN

REC'D	TYPED OR WRITTEN	WRITTEN BY
12/24/80	1/7/81 EE	THC

SCHEDULED	WK.	SHIPPED
4-20-81		

ORDER NO.	TERRITORY CODE	CUSTOMER CODE	CUST. ORDER NO.	INVOICE NO.	DATE INVOICED
	C0243 ID	15600	PC18610		

SEND___COPIES INVOICE.___B.L.

S.I.	DESCRIPTION	UNIT PRICE	AMOUNT
	3 X 2 MODEL W-C WEMCO SLURRY PUMP MATERIAL: HI-CHROME WITH HI-CHROME CENTRIFUGAL SEAL IMPELLER DIA. FULL CONDITIONS: 90 GPM OF 1.05 S.G. SLURRY AGAINST 88' TDH AT 1750 RPM S/N 8195499-1 ROTATION: CW VIEWED FROM PUMP SHAFT EXTENSION COMPLETE WITH COMMON PUMP AND BASE AND OVERHEAD MOTOR MOUNT AND BELT GUARD CONSTANT SPEED V-BELT PUMP SHEAVE: 8.0 OD 2B GROOVE 1 3/4 BORE 3/8 X 3/16 KW MOTOR SHEAVE: 8.0 OD 2B GROOVE 1 5/8 BORE 3/8 X 3/16 KW B60 MATCHED BELTS HORIZONTAL MOTOR: 15 HP 1750 RPM T.E.F.C. FRAME NO. 284U 3 PHASE, 60 CYCLE, 460 VOLTS 2 belts ? Space Already in Part ?		

AUG 31 '99 11:09AM FMC ENV & ENG DEPTS
EMCO
SHEET
ersedes P5-D210
ed July 1, 1970
WEMCO SLURRY PUMP
TYPE W - GENERAL ARRANGEMENT
P5-D210
DATE: 3/31/80

PUMP SIZE SUCTION/DISCHARGE	DIMENSIONS IN INCHES A	B	C	D	E	F	G	H	K	L	N	P	Q	R	U	W	RA	RB	RC	SA MIN	SA MAX	BB	CC	WEIGHT
3X2X9 WC	2	1¼	6⅞	12⅝	5 1/16	8⅝	10⅛	7	16	1½	28⅜	4	1¾	¾SQ	¾	1	4 13/16	9¼	6⅞	21	25¾	38¼	21 15/16	286
4X3X10½ WC	2	1¼	6⅞	12⅝	5⅞	11	10⅛	7	16	6	31⅞	4	1¾	¾SQ	¾	1	4 13/16	10⅝	7¾	19½	25¾	41¾	23⅜	286
6X4X15⅝ WD	2¼	1½	8⅜	14¼	9	14	13	8½	19⅜	7¾	38¼	5	2⅝	⅝SQ	⅞	⅞	6¼	12½	11⅝	26¾	31⅝	45¾	28⅞	365
8X6X15½ WD	2¼	1½	8⅜	14¼	11	13	13	8½	19⅜	7¾	39¼	6	2⅝	⅝SQ	⅞	⅞	6¼	13 1/16	12⅜	26¾	31⅝	46⅛	31⅞	365
8X6X22 WE	2⅜	2⅛	10⅛	17⅝	12½	18⅞	18	10¾	24½	8¾	48⅝	6	3¼	¾SQ	1⅛	1¼	8¾	16	15¾	40½	45⅛	54⅞	37½	444
8X6X22 WF	2⅜	2⅝	13¾	23⅞	12½	18⅞	24⅝	15	33¾	8¾	56¼	6½	4¼	1SQ	1⅜	1⅝	11	17 5/16	15¾	42½	50⅝	61⅛	39⅝	①
② 10X8X22½ WF	2¾	2⅝	13¾	23⅞	15	18⅞	24⅝	15	33¾	12⅝	60½	6½	4¼	1SQ	1⅜	1⅝	11	17½	17 1/16	42½	50⅝	65	43¾	①

② SUCTION FLANGE DETAIL

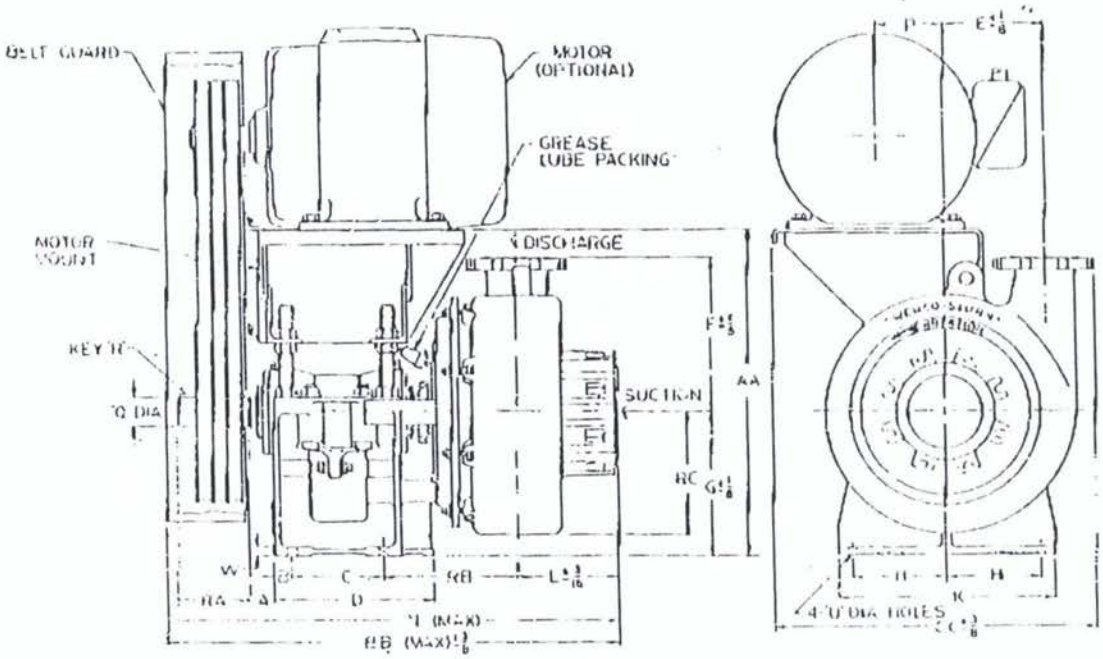

FLANGES MATE TO ANSI CLASS 125 FLANGES						
DIMENSIONS IN INCHES	FLANGE SIZE 2	3	4	6	8	10
DIAMETER	6	7½	9	11	13½	16
THICKNESS	5/8	3/4	5/16	11/16	11/16	13/16
BOLT CIRCLE	4¾	6	7½	9½	11¾	14¼
NO OF SLOTS	4	4	8	8	8	12
DIA OF SLOTS	3/4	3/4	3/4	7/8	7/8	1

① CONSULT FACTORY FOR MAX MOTOR SIZE.
② SUCTION FLANGE AS SHOWN IN DETAIL.

CERTIFIED CORRECT FOR CONSTRUCTION

By E. Thoreson da

Date 3-13-81

1. Dimensions are not for installation purposes unless certified.
2. Pump and accessories are designed for continuous service.
3. Discharge may be rotated in steps of 45°.
4. Clockwise rotation, as shown, only rotation available.

WEMCO SLURRY PUMP

TYPE W

WITH OVERHEAD MOTOR MOUNT

GENERAL ARRANGEMENT

SER No. 8195499-1

WEMCO DATA SHEET

Supersedes P5-D206 & D206.1

Dated December 15, 1968

WEMCO SLURRY PUMP

TYPE W - GENERAL ASSEMBLY

P5-D206

DATE: July 1, 1970

	REF NO	PART DESCRIPTION	MATL	QTY
	001	ADJUSTING SCREW	STL	1
	003	BASE	C I	1
	004	BEARING HOUSING	C I	1
(1)	005	BEARING HOUSING ASSEM		1
	009	BEARING		2
	011	CLAMP WASHER	STL	4
	012	CLAMP BOLT & NUT	STL	4
	015	VOLUTE BOLT	STL	1
	024	END COVER	C I	2
	025	SHIM SET	PLAST	1
	027	END COVER CAPSCREW	STL	1
	028	EXPELLER	C I	1
	029	EXPELLER RING	C I	1
	032	FRAME PLATE ADAPTER	C I	1
	033	FRAME PLATE BOLT	STL	3
	040	FR PL LOWER INSERT BOLT	STL	2
	041	FR PL LOWER INSERT	M	1
	044	GLAND	C I	1
	045	GLAND BOLT	STL	2
	046	GREASE RETAINER	C I	2
	061	LOCKNUT & WASHER	STL	1
	062	LABYRINTH	C I	2
	063	LANTERN RING	BRZ	1
	064	IMPELLER GASKET	PAPER	1
	067	NECK RING	BRZ	1
	070	PULLEY KEY	CRS	1
	073	SHAFT	STL	1
	075	SHAFT SLEEVE	ST STL	
	108	PISTON RING	C I	4
	109	SLEEVE O-RING	NEOP	2
	110	VOLUTE	M	1
	111	PACKING RINGS	AIR DRIVEN	2
	122	RING SEAL	NEOP	1
	124	VOLUTE SEAL	NEOP	1
	147	IMPELLER	M	1
GLAND SEAL	018	STUFFING BOX	C I	1
	111	PACKING RINGS	AIR DRIVEN	4
	117	SHAFT SPACER	STL	1
	118	LANTERN RESTRICTOR	BRZ	1

M = 28% CHROME IRON

NOTES

(1) BEARING HOUSING ASSEMBLY (005) CONSISTS OF THE FOLLOWING REF NOS. 004, 009, 024, 025, 027, 046, 061, 062, 063, 070, 073, 108 & 109.

2. PUMP SIZE, MODEL & SERIAL NO MUST BE SPECIFIED WHEN ORDERING SPARE PARTS.

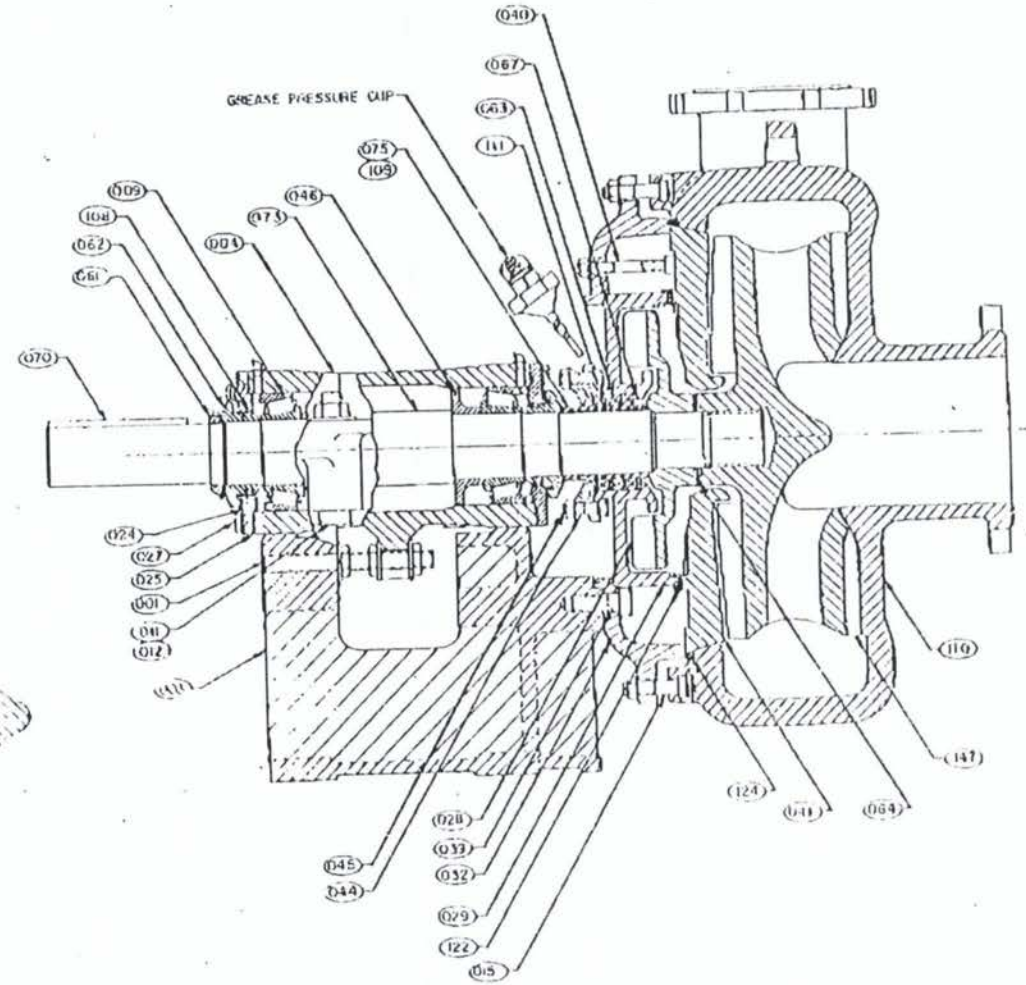

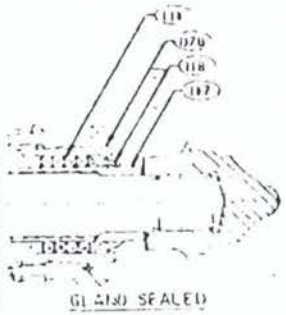

WEMCO SLURRY PUMP

TYPE W

4 x 3, 6 x 4, 8 x 6, 10 x 8

General Assembly

SER. No. 8195499-1

WEMCO
DATA SHEET
Supersedes P5-D20
dated 6/30/79

WEMCO SLURRY PUMP

PERFORMANCE CURVE

DATE: 3/31/80

P5-D20

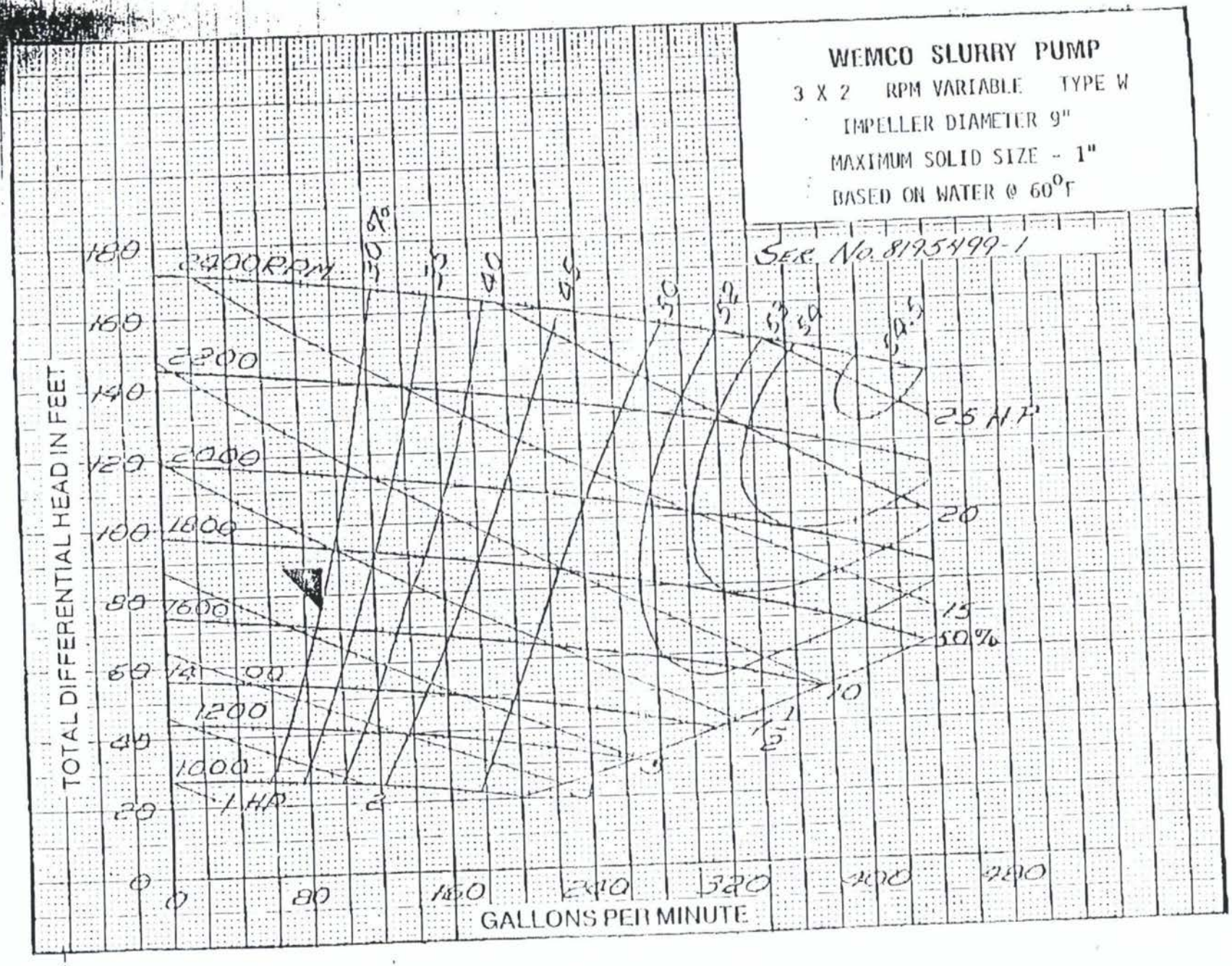

PARTS LIST

WEMCO SLURRY PUMP

Circuled Items Required / ADA 1/2/32

Customer: FMC Corporation

Type Pump: 3 x 2 "WC"

Pump Serial Number: 8195499-1-2

Drawing Number: _____

Ref. No.	Qty.	Description	Part No.	Price
1	1	Adjusting Screw	222145, 231100, 233030	3.00
3	1	Base	18490	796.00
4	1	Bearing Housing	27059	530.00
9	2	Bearing	100206, 100207	56.00
11	4	Clamp Washer	233525	17.00
12	4	Clamp Bolt and Nut	206201, 231520	6.00
15	-	Volute Bolt	202135, 230905, 232855	4.00
24	2	End Cover	47665	63.00
25	1	Shim Set	81811	5.00
27	-	End Cover Capscrew	200605, 232510	13.00
*28	1	Expeller	27098A	256.00
29	1	Expeller Ring	27097A	439.00
32	1	Frame Plate Adapter	62314A	318.00
39	3	Frame Plate Bolt	222160, 231020, 202185	5.00
40	4	Fr. Pl. Liner Insert Bolt	203690, 231151, 233105	5.00
41	1	Fr. Pl. Liner Insert	27099A	258.00
*44	1	Gland	26989A	73.00
45	2	Gland Bolt	200421, 230280, 232320	2.00
46	2	Grease Retainer	81812	41.00
61	1	Locknut and Washer	251640, 252320	14.00
62	2	Labyrinth	81821	77.00
*63	1	Lantern Ring	81810	45.00
*64	1	Impeller Gasket	145023	3.00

PARTS LIST

WEMCO SLURRY PUMP

Customer: FMC Corporation

Type Pump: 3 X 2 "WC"

Pump Serial Number: 8195499-1-2

Drawing Number: _____

Ref. No.	Qty.	Description	Part No.	Price
67	1	Neck Ring	68458-1	15.00
70	1	Pulley Key	237080	8.00
73	1	Shaft	26961	300.00
* 75	1	Shaft Sleeve	81822	120.00
78	1	Stuffing Box	---	
103	1	Piston Ring	181069	21.00
109	2	Sleeve O-Ring	142108	5.00
*110	1	Volute	56203A	670.00
111	4	Packing Rings	145074	6.00
117	1	Shaft Spacer	---	
118	1	Lantern Restrictor	---	
122	1	Ring Seal	81863	20.00
*124	1	Volute Seal	142132	9.00
*147	1	Impeller	18561A	468.00

For additional information use WEMCO Data Sheet P5-D210.

* Recommended spare parts.

8339A

ALL PRICES FOB SACRAMENTO, CALIF. - SUBJECT TO CHANGE WITHOUT NOTICE -

NOT SUBJECT TO DISCOUNT

This sheet is the property of Envirotech Corp., WEMCO Division, 701 North 8 Street, Sacramento, California, and is loaned under the express condition that it is not to be used in any manner directly or indirectly detrimental to Envirotech Corporation.

WEMCO
DATA SHEET

Supersedes P5-D206 & D206.1
Dated December 15, 1968

WEMCO SLURRY PUMP

TYPE W - GENERAL ASSEMBLY

P5-D206

DATE: July 1, 1970

REF. NO.	PART DESCRIPTION	MATL	NO.
001	ADJUSTING SCREW	STL	-
003	BASE	C I	1
004	BEARING HOUSING	C I	-
(1) 005	BEARING HOUSING ASSEM	-	1
009	BEARING	-	2
011	CLAMP WASHER	STL	4
012	CLAMP BOLT & NUT	STL	4
015	VOLUTE BOLT	STL	-
024	END COVER	C I	2
025	SHIM SET	PLAST	-
027	END COVER CAPSCREW	STL	-
028	EXPELLER	C I	1
029	EXPELLER RING	C I	-
032	FRAME PLATE ADAPTER	C I	-
039	FRAME PLATE BOLT	STL	3
040	FR PL LINER INSERT BOLT	STL	4
041	FR PL LINER INSERT	*	1
044	GLAND	C I	1
045	GLAND BOLT	STL	2
046	GREASE RETAINER	C I	2
061	LOCKNUT & WASHER	STL	1
062	LABYRINTH	C I	2
063	LANTERN RING	BRZ	-
064	IMPELLER GASKET	FIBER	1
067	NECK RING	BRZ	1
070	PULLEY KEY	CRS	1
073	SHAFT	STL	1
075	SHAFT SLEEVE	ST STL	-
108	PISTON RING	C I	2
109	SLEEVE O RING	NEOP	2
110	VOLUTE	*	-
111	PACKING RINGS	316 GRAPHITE	2
122	RING SEAL	NEOP	-
124	VOLUTE SEAL	NEOP	1
147	IMPELLER	*	-
GLAND SEAL 078	STUFFING BOX	C I	1
111	PACKING RINGS	316 GRAPHITE	4
117	SHAFT SPACER	STL	1
118	LANTERN RESTRICTOR	BRZ	1

* 28% CHROME IRON

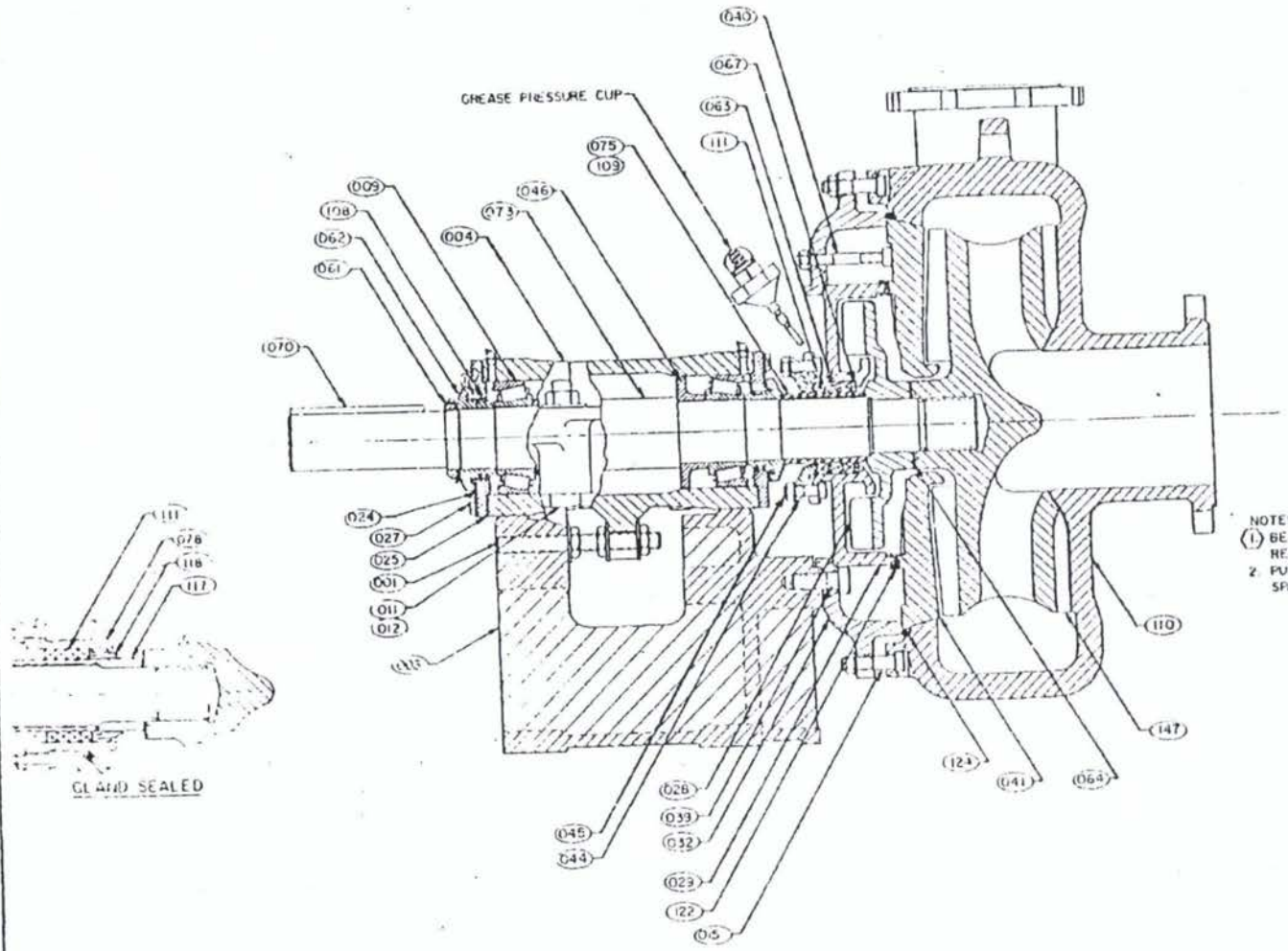

NOTES
(1) BEARING HOUSING ASSEMBLY (005) CONSISTS OF THE FOLLOWING REF NOS. 004, 009, 024, 025, 027, 046, 061, 062, 064, 070, 073, 108 & 109
2. PUMP SIZE, MODEL & SERIAL NO MUST BE SPECIFIED WHEN ORDERING SPARE PARTS.

WEMCO SLURRY PUMP

TYPE W

4 x 3, 6 x 4, 8 x 6, 10 x 8

General Assembly

SER. No. 8195499-1

WEMCO
DATA SHEET
Supersedes P5-D20
dated 6/30/79

WEMCO SLURRY PUMP
PERFORMANCE CURVE

DATE: 3/31/80

P5-D20

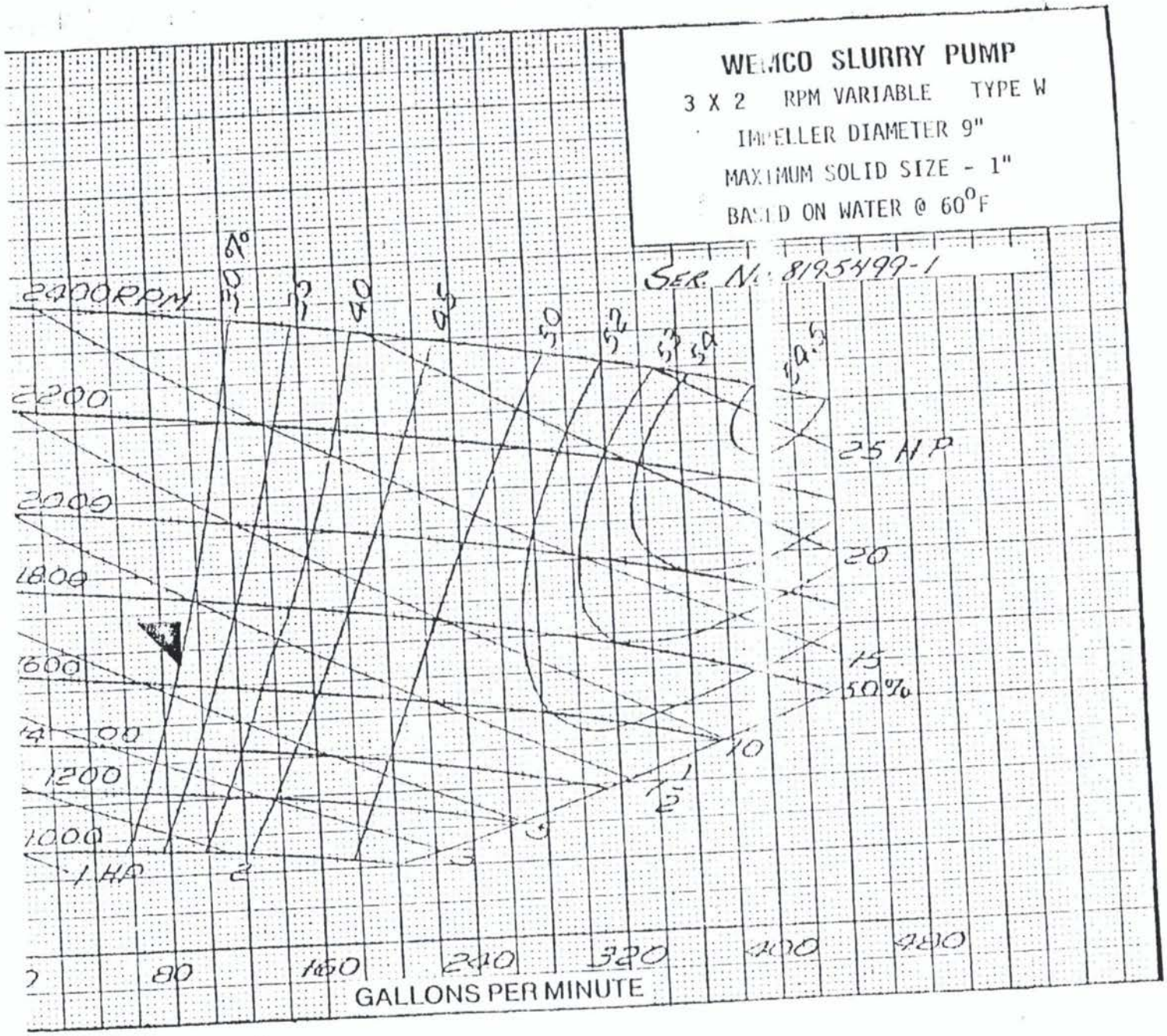

WEMCO
DATA SHEET
Supersedes P5-D20
dated 6/30/79

WEMCO SLURRY PUMP
PERFORMANCE CURVE

DATE: 3/31/80

P5-D20

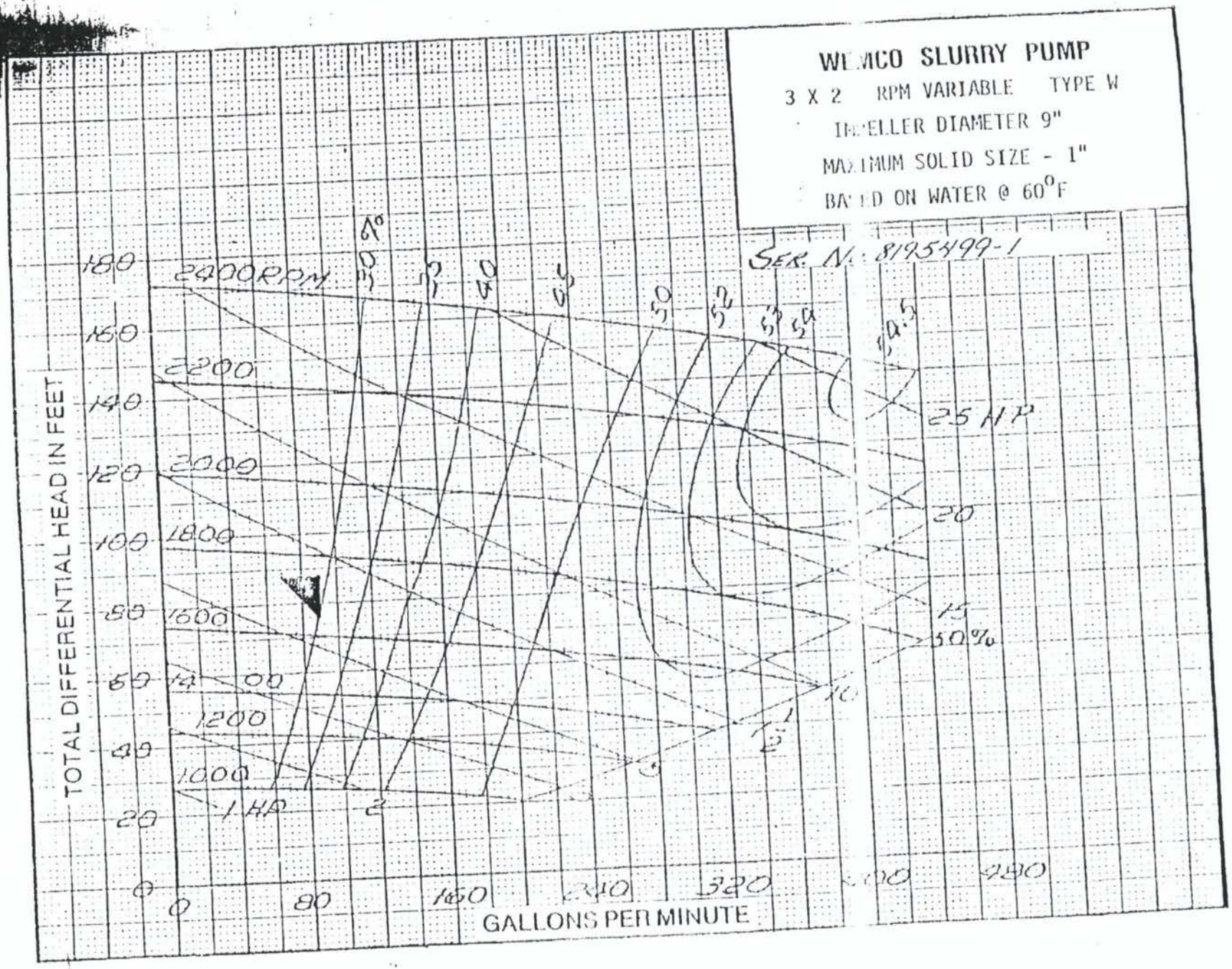

NOSAP Slurry Recirculation Pumps

Equipment Number: 62-1120, 62-1120A, 62-2120, 62-2120A, 62-3120, 62-3120A, 62-4120, 62-4120A
P&ID Equipment Number: P-1350,1351,2350,2351,3350,3351,4350,4351
Reference Drawings: 398260, 398261, 398262, 398263, 398264, 398266
Equipment Brand: Warman Horizontal centrifugal Sluury Pumps
Equipment Model: 3/2 C-AH metal lined, PDDI, class 9A
Specifications: 110 gpm @ 42 ft.
Other Items not Directly Supplied by Warman
Motor:184T,TEFC-XEX, 5HP, 1800 RPM, 3Phase, 60Hz, 460volt
Coupling: Belt Drive
Seal: Stuffing Box

Recommended Preventive Maintenance: Lubricate bearings every 6 months. Inspect belts every 3 months.

Recommended Preventive Maintenance:

Spare Parts in Stores:

Equipmnet Item	Part Number	Stores Number
Woods V-belts	VW AX56	
Woods Motor Sheave	VW 4.6 PDXB2	
Woods Motor Bushing	VW SDS-1.125"	
Woods Pump Sheave	VW 6.8 PDXB2	
Woods Pump Bushing	VW SDS-42mm	
Frame Plate Liner Insert	2041A05	
Intake Joint Ring	2060S01	SEE 62-8205
Volute Liner	2110A05	SEE 62-8205
Volute Frame Seal	2125S01	SEE 62-8205
Discharge Joint Ring	2132S01-L	SEE 62-8205
Gland Split W/bolts/nuts	044C23	
GlAND bolt w/nut/washer	045C23	
Shaft Sleeve	075C21	
Stuffing Box	078C02	
Shaft O-Ring	109S51	SEE 62-8205
Gland Packing	111Q31	
Shaft Spacer	117C21	
Lantern Restrictor	118P50-1	
Seal Ring	122R11	
O-Ring Impeller Seal	217S51	SEE 62-8205
Bearing Assembly -10 Seal	005-MM10	SEE 62-8205

REV. 2 - ADDED NO. 2 OF 10' @ 110GPM/42' TDH. 11-30-94
REV. 1 - IMPELLER CHANGED FROM CLOSED TO OPEN SPEED CHANGED A. RESULT. 10-24-94 B.W.H.

* GUIDE LINE ONLY, CONSULT FACTORY WHEN APPROACHING THESE LIMITS 4U

WARMAN INTERNATIONAL INC.								PERFORMANCE CURVES
PUMP			IMPELLER C2127 LP				SHAFT SEAL GLAND	A4-67232
SIZE	FRAME	TYPE	VANES	TYPE	MAT'L	VANE DIA.	LINER MAT'L METAL	
3/2	C	AH		PADDLE	METAL	229 mm 9.0 IN		EFFECTIVE FROM DECEMBER 1989
APPROXIMATE PERFORMANCE FOR CLEAR WATER CORRECTIONS MUST BE MADE FOR THE SPECIFIC GRAVITY AND VISCOSITY OF THE MIXTURE TOGETHER WITH OTHER EFFECTS OF SOLIDS						NORM MAX RPM * 2400	NORM MAX HP * HP = 40 KW = 30	MAX PARTICLE SIZE 36 .mm 1.4 in. SPHERE

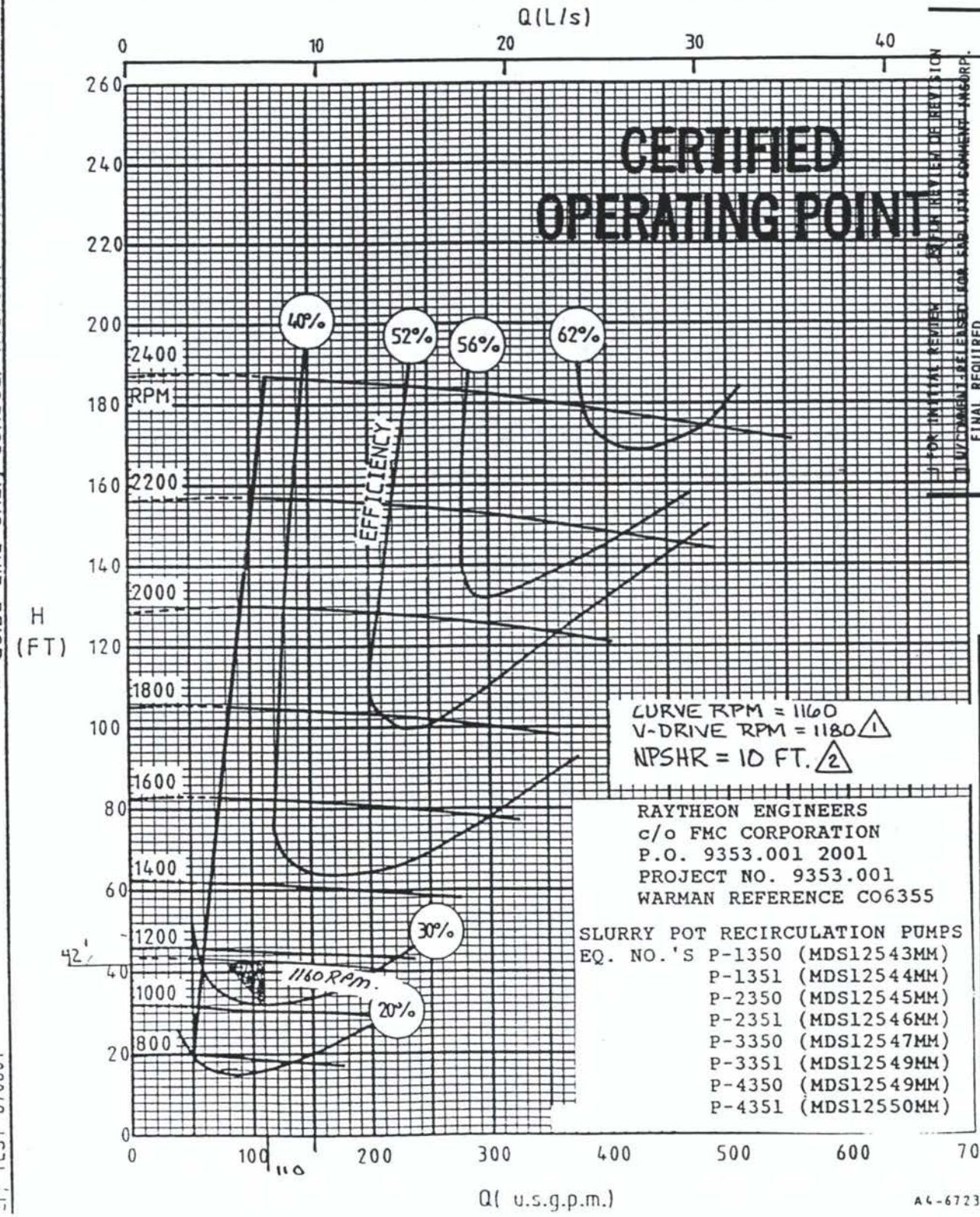

RAYTHEON ENGINEERS
c/o FMC CORPORATION
P.O. 9353.001 2001
PROJECT NO. 9353.001
WARMAN REFERENCE CO6355

SLURRY POT RECIRCULATION PUMPS
EQ. NO.'S P-1350 (MDS12543MM)
P-1351 (MDS12544MM)
P-2350 (MDS12545MM)
P-2351 (MDS12546MM)
P-3350 (MDS12547MM)
P-3351 (MDS12549MM)
P-4350 (MDS12549MM)
P-4351 (MDS12550MM)

☐ FOR INITIAL REVIEW ☒ FOR REVIEW OF REVISION
☐ W/COMMENT-RELEASED FOR FAB WITH COMMENT INCORP.
FINAL REQUIRED
☐ NO COMMENT-RELEASED FOR FAB-FINAL REQUIRED
☐ NOT RELEASED FOR FAB REVISE & RESUBMIT FOR
☒ REVIEW
☒ FINAL-NO RETURN REQ'D ☐ FOR INFO-NO RETURN REQ'D
BY [signature] DATE 12/16/94
REVIEW DOES NOT RELIEVE CONTRACTOR FROM RESPONSIBILITY FOR COMPLIANCE WITH THE CONTRACT DOCUMENTS.

RAYTHEON ENGINEERS & CONSTRUCTORS
PROJECT NO 9353.001
RECEIVED 12/13/94
FILE NO 9
PO NO 2001
REQN OR TASK 2001
TAG NO P-1350,1/2350,1/3350,1/4350,1

EF; TEST 870601

A4-67232/2

WARMAN INTERNATIONAL, INC.

SLIP ON FLANGES

Pump Model No. 3/2 CAH

SUBMITTED FOR INFORMATION ONLY

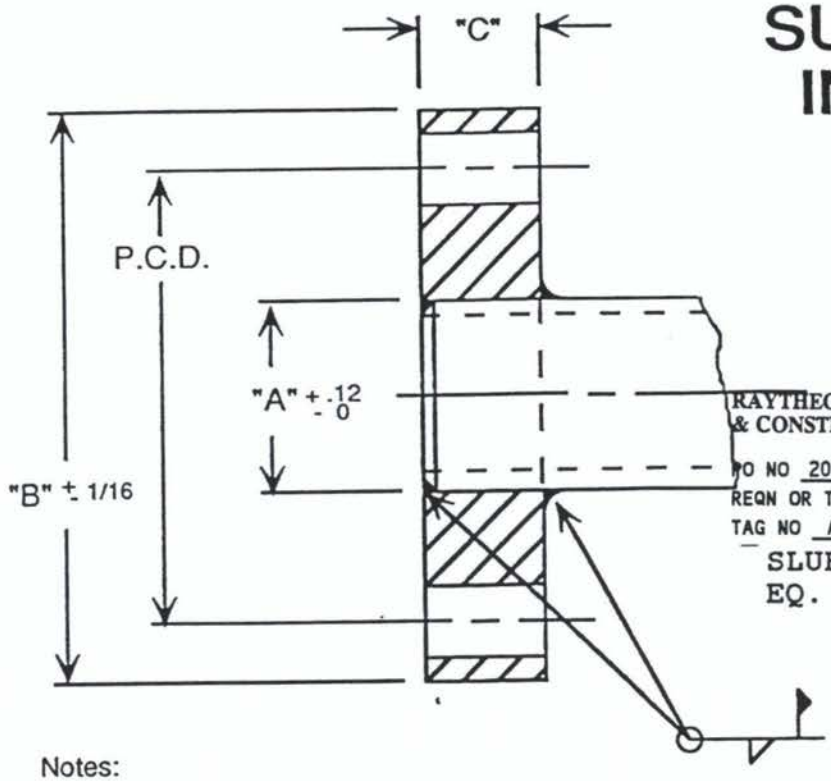

RAYTHEON ENGINEERS
c/o FMC CORPORATION
P.O. 9353.001 2001
PROJECT NO. 9353.001
WARMAN REFERENCE CO6355

RAYTHEON ENGINEERS & CONSTRUCTORS ORIG

PROJECT NO 9353001
PO NO 2001 RECEIVED 10/06/94
REQN OR TASK 2001 FILE NO 19
TAG NO ALL

SLURRY POT RECIRCULATION PUMPS
EQ. NO.'S P-1350 (MDS12543MM)
P-1351 (MDS12544MM)
P-2350 (MDS12545MM)
P-2351 (MDS12546MM)
P-3350 (MDS12547MM)
P-3351 (MDS12549MM)
P-4350 (MDS12549MM)
P-4351 (MDS12550MM)

WASTE SLURRY TRANSFER PUMPS
EQ. NO.'S P-3700-A (MDS12551MM)
P-3700-B (MDS12552MM)

Notes:

1. Customer to furnish necessary flange bolts. Type 4140 are recommended.
2. Customer to furnish pipe as required. Weld all around as indicated.
3. Material:
   Warman Adapter Flange
   ASTM-A-36 Mild Steel
4. Ref: Pump outline dimensional drawing for mating flange details.
5. All dimensions below are in inches.

☒ FOR INITIAL REVIEW ☐ FOR REVIEW OF REVISION
☐ W/COMMENT-RELEASED FOR FAB WITH COMMENT INCORP. FINAL REQUIRED
☐ NO COMMENT-RELEASED FOR FAB-FINAL REQUIRED
☐ NOT RELEASED FOR FAB - REVISE & RESUBMIT FOR REVIEW
☒ FINAL-NO RETURN REQ'D ☐ FOR INFO-NO RETURN REQ'D
BY [illegible] DATE 11/21/94
REVIEW DOES NOT RELIEVE CONTRACTOR FROM RESPONSIBILITY FOR COMPLIANCE WITH THE CONTRACT DOCUMENTS.

		FLANGE DATA				BOLT DATA		PIPE
Flange	Warman Part Number	A	B	C	P.C.D.	Size	Qty.	Nom. Size
Intake	ZIF 30MS	3.56	8-1/2	1	7	5/8" UNC x 2-1/4 LG	4	3"
Discharge	ZDF 30MS	2.44	7-1/4	3/4	5-3/4	5/8" UNC x 2-1/4 LG	4	2"

UMP SIZE	"A"	"B"	"C"	TAP SIZE
5/1 BAH	7-3/4 [197]	2" [52]	55°	1/8 NPT
1.5 BAH	8-1/8 [206]	"	"	"
/2 CAH	10-7/8 [275]	2-1/2 [65]	"	1/4 NPT
/3 CAH	12-1/2 [318]	2-3/8 [62]	35°	"

PUMP SIZE	"A"	"B"	"C"	TAP SIZE
12/10 FAH	26" [662]	6-1/2 [166]	45°	1" NPT
12/10 GAH	"	"	"	"
12/10 STAH	"	"	"	"
12/10 TAH	"	"	"	"

RAYTHEON ENGINEERS ORIG
& CONSTRUCTORS
PROJECT NO 9353001
PO NO 2001 RECEIVED 10/06/94
REQN OR TASK 2001 FILE NO 6
TAG NO P-1350,1/2350,1/3350,1/4350,1

RAYTHEON ENGINEERS
c/o FMC CORPORATION
P.O. 9353.001 2001
PROJECT NO. 9353.001
WARMAN REFERENCE CO6355

SLURRY POT RECIRCULATION PUMPS
EQ. NO.'S P-1350 (MDS12543MM) P-3350 (MDS12547MM)
P-1351 (MDS12544MM) P-3351 (MDS12549MM)
P-2350 (MDS12545MM) P-4350 (MDS12549MM)
P-2351 (MDS12546MM) P-4351 (MDS12550MM)

☒ FOR INITIAL REVIEW ☐ FOR REVIEW OF REVISION
☐ W/COMMENT-RELEASED FOR FAB WITH COMMENT INCORP. FINAL REQUIRED
☐ NO COMMENT-RELEASED FOR FAB-FINAL REQUIRED
☐ NOT RELEASED FOR FAB - REVISE & RESUBMIT FOR REVIEW
☒ FINAL-NO RETURN REQ'D ☐ FOR INFO-NO RETURN REQ'D
BY [signature] DATE 11/24/94
REVIEW DOES NOT RELIEVE CONTRACTOR FROM RESPONSIBILITY FOR COMPLIANCE WITH THE CONTRACT DOCUMENTS.

DIMENSIONS GIVEN IN INCHES & [mm]

TAP SIZE - STANDARD POSITION OF CONNECTION INDEPENDANT OF PUMP DISCHARGE FLANGE

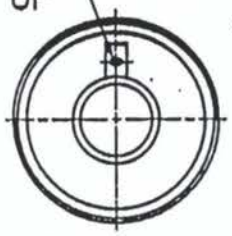

VIEW "X - X"

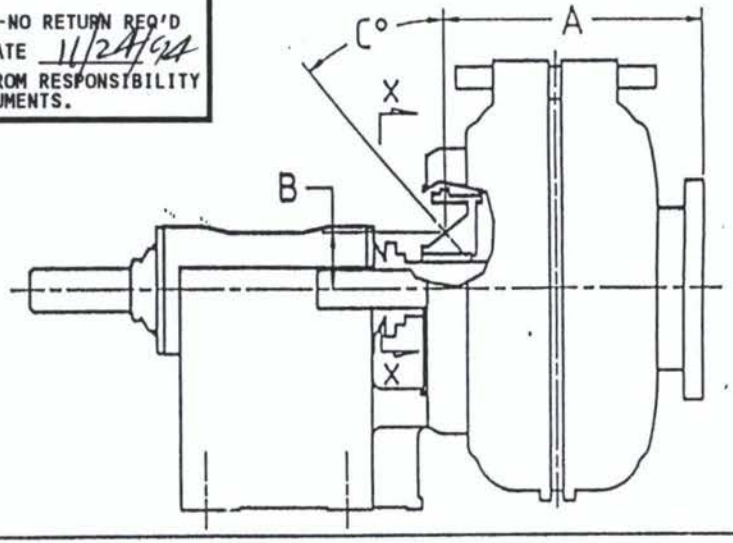

SUBMITTED FOR INFORMATION ONLY

WARMAN INTERNATIONAL LTD. [illegible] is the owner of the copyright subsisting in this drawing and those specifications and instructions. They must not be used, reproduced or copied in whole or in part, in any form or by any [illegible] any the information therein contained, which is confidential to WARMAN INTERNATIONAL LTD. be disclosed to any person, [illegible] the prior written consent of WARMAN INTERNATIONAL LTD. [illegible] has been delivered and received on the express conditions that it may be used only for the specific purpose for which [illegible] provided, and not be used in any way which may injure or cause loss directly or indirectly to WARMAN INTERNATIONAL [illegible] reached corporation and will be returned to WARMAN INTERNATIONAL LTD. immediately on completion of the task for which [illegible] provided, or on demand.

DESCRIPTION	BY	DATE
ADDED 75 BGP & 100 CGP DETAIL DIMENSIONS TO SHEET 5 OF 5	JHB	2-1-94
REVISED 8/6 THH DIMS. & REMOVED DETAIL FROM SHEET 1; ADDED SHEETS 4 & 5	DZ	1-11-94

REVISIONS

APP.	[signature]
CHECK	JCV
DRN.	DCZ
DATE	9-9-91
SCALE	-----

POSITION OF GLAND WATER CONNECTION FOR WARMAN SERIES "AH" PUMPS

WARMAN INTERNATIONAL INC.

OFFICE OF ORIGIN : MADISON

Warman CAE-CAD-CAM

A3-110 -0-370194

SHEET 2 OF 5

REV. 2

RAYTHEON ENGINEERS
c/o FMC CORPORATION
P.O. 9353.001 2001
PROJECT NO. 9353.001
WARMAN REFERENCE C06355

USER/LOCATION
USER REF
PUMP ID. 032CAHCCCQ-127 WARMAN REF PUMP DESC. 3/2CAH SLURRY PUMP/PDIL I DATE 10/24/94 CLASS 9A

DESCRIPTION		PART NO.	NO. PER PUMP	WEIGHT	GROUP 1 PRICE	RECOMMENDED SPARES PER OPER. PUMP
FRAME PLATE LINER INSERT	C	2041A05	1	14.7	291.60	
INTAKE JOINT RING	C	2060S01	1	.2	37.80	
VOLUTE LINER	C	2110A05	1	55.0	551.70	
VOLUTE FRAME SEAL	C	2125S01	1	.2	42.30	
DISCHARGE JOINT RING	C	2132S01-L	1	.5	52.20	
GLAND SPLIT W/BOLTS/NUTS	C	044C23	1	2.0	138.60	
GLAND BOLT W/NUT&WASHER	C	045C23	2	.2	9.00	
SHAFT SLEEVE	C	075C21	1	1.2	145.80	
STUFFING BOX	C	078C02	1	13.5	302.40	
SHAFT O-RING	C	109S51	2	.2	2.25	
GLAND PACKING	C	111Q31	4	.2	3.69	
SHAFT SPACER	C	117C21	1	.7	171.90	
LANTERN RESTRICTOR	C	118P50-1	1	.2	123.30	
SEAL RING	C	122R11	1	.2	35.10	
O-RING IMPELLER SEAL	C	217S51	1	.2	5.22	
PIPE PLUG 1/4"NPT	ZPL	20MS	1	.2	.27	
COVER PLATE BOLT W/2 NUTS	C	015E66	4	1.2	55.80	
FRAME PLATE STUD W/2 NUTS	C	039E62	3	1.0	25.20	
COVER PLATE	C	2013D21	1	50.5	646.20	
FRAME PLATE	C	2032D21	1	47.5	752.40	
ADJUSTING BOLT W/3-ZNT &	C	001E62	1	1.0	27.00	
BASE	C	003D21	1	92.0	834.30	
CLAMP WASHER	C	011E62	4	.2	6.84	
CLAMP BOLT W/NUT	C	012E62	4	1.0	6.84	
SHAFT WRENCH METRIC	C	306-M65978	1	8.7	167.40	
BEARING ASSEMBLY MOD.METR	C	005-MM10	1	75.0	1,037.70	
GREASE CAP PVC	A	365P30	2	.2	.45	
END COVER SET SCREW	B	027E62	8	.2	.45	
BEARING HOUSING	C	004G01	1	33.0	367.20	
BEARING	C	009	2	3.0	40.50	
END COVER	C	024D81-10	2	3.0	104.40	
END COVER SHIM SET 9 P	C	025	1	.2	16.20	
GREASE RETAINER	C	046G01	2	1.0	44.10	
LABYRINTH LOCKNUT	C	061E62	1	.5	37.80	
LABYRINTH	C	062D81-10	2	1.2	47.70	
SHAFT KEY METRIC	C	070E02-M	1	.2	12.60	
SHAFT METRIC	C	073E05-M	1	20.0	337.50	
BRNG.SEAL RING CRW4007	C	089S10-10	2	.2	12.60	
PISTON RING HOOK STYLE	C	108G01-H	4	.2	7.92	
GREASE ZERK 1/4"-28 TH	ZFF	250MS	2	.2	1.98	
PIPE PLUG 1/4"NPT	ZPL	20MS	2	.2	.27	

***** PRICES ARE FOB SHIPPING POINT AND ARE SUBJECT *****
***** TO CHANGE WITHOUT NOTICE ***** 10/24/94 *****

SLURRY POT RECIRCULATION PUMPS
EQ. NO.'S P-1350 (MDS125-3MM)
P-1351 (MDS125-4MM)
P-2350 (MDS125-5MM)
P-2351 (MDS125-6MM)
P-3350 (MDS125-7MM)
P-3351 (MDS125-9MM)
P-4350 (MDS125-9MM)
P-4351 (MDS125-9MM)

RAYTHEON ENGINEERS & CONSTRUCTORS ORIG
PROJECT NO 9353001
PO NO 2001 RECEIVED 11/03/94
REQN OR TASK 2001 FILE NO 11
TAG NO P-1350,1/2350,1/3350,1/4350,1
☒ FOR INITIAL REVIEW ☐ FOR REVIEW OF REVISION
☐ COMMENT-RELEASED FOR FAB WITH COMMENT INCORP. FINAL REQUIRED
☐ NO COMMENT-RELEASED FOR FAB-FINAL REQUIRED
☐ NOT RELEASED FOR FAB - REVISE & RESUBMIT FOR REVIEW
☒ FINAL-NO RETURN REQ'D ☐ FOR INFO-NO RETURN REQ'D
BY DATE 11/21/94
REVIEW DOES NOT RELIEVE CONTRACTOR FROM RESPONSIBILITY FOR COMPLIANCE WITH THE CONTRACT DOCUMENTS.

WM - AM177

Warman

Installation, Operation & Maintenance Manual

R[illegible]EON ENGINEERS ORIG
[illegible]ONSTRUCTORS
[illegible] 2001 [illegible] 9353001
[illegible] 10/06/94
[illegible] OR TASK 2001 [illegible]
[illegible] NO ALL
☒ FOR INITIAL REVIEW ☐ FOR REVIEW OF REVISION
☐ W/COMMENT-RELEASED FOR FAB WITH COMMENT INCORP FINAL REQUIRED
☐ NO COMMENT-RELEASED FOR FAB FINAL REQUIRED
☐ NOT RELEASED FOR FAB - REVISE & RESUBMIT FOR REVIEW
☒ FINAL-NO RETURN REQ'D ☐ FOR INFO-NO RETURN REQ'D
BY [illegible] DATE [illegible]
REVIEW DOES NOT RELIEVE CONTRACTOR FROM RESPONSIBILITY FOR COMPLIANCE WITH THE CONTRACT DOCUMENTS

Model AH AHP AHU L

Horizontal Centrifugal Slurry Pumps

WARMAN SERIES 'A' SLURRY PUMP

ASSEMBLY AND MAINTENANCE INSTRUCTIONS

September 1991

Performance that pays.
WARMAN INTERNATIONAL, INC.
2701 South Stoughton Road, P.O. Box 7610, Madison, WI 53707-7610, 608/221-2261, FAX 608/221-3003

PUMP INDENTIFICATION

PUMP IDENTIFICATION CODE

Every Warman Pump has a nameplate attached to the base. The pump serial number and identification code are stamped on the nameplate.

The pump identification code is made up of digits and letters arranged as follows:

Digits	Digits	Letters	Letters
(A) Intake Diameter	(B) Discharge Diameter	(C) Frame Size	(D) Wet End Type

A. The intake diameter is expressed in inches, such as 1.5, 2, 4, 10, 20, 36, etc.

B. The discharge diameter is also expressed in inches, such as 1, 1.5, 3, 8, 18, 36, etc. Note: Series 'A', Type 'L' pumps are identified by discharge diameter expressed in millimeters - the intake diameter is not specified.

C. The frame of the pump consists of the base and the bearing assembly. The size of a frame is identified by one or two letters, such as B, C, D, ST, etc.

D. The type of pump wet end is identified by one or two letters. Some of these are:

AH, HH, L, M - Slurry Pumps with replaceable liners.

D, G - Dredge Pumps and Gravel Pumps.

S, SH - Heavy-Duty Solution Pumps.

Examples:

2/1.5 BAH:
- 2" intake diameter
- 1.5" discharge diameter
- B = frame size
- AH = slurry pump with replaceable liners

10/8 FG:
- 10" intake diameter
- 8" discharge diameter
- F = frame size
- G = gravel duty wet end.

250 FL:
- 250 mm discharge diameter
- F = frame size
- L = slurry pump with replaceable liners.

SPARE PARTS

STOCK LEVELS

Spare parts for Warman Pumps consist mainly of liners, impellers, bearings, shaft sleeves, seals, and shaft seal parts. Depending on the expected life of each part, you should keep a number of spares of each in stock to ensure a minimum of downtime. Major plants typically stock an additional bearing assembly for every ten (or less) pumps of the same size. This enables a quick exchange of the bearing assembly in any one of the pumps. Often this operation is carried out when wearing parts are being replaced. The removed bearing assembly can then be inspected in a workshop, overhauled if required, and kept ready for the next pump. In this way, damage is prevented and all pumps are always kept in optimum conditions with a minimum of downtime.

PART NUMBERS

Warman pump parts are described by a part number consisting of three segments.

1. The (1) to (5) digit alpha or alpha/numeric prefix which references the relative pump or frame size of the part.

2. The (3) digit numeric "basic part number" which indicated the part type.

3. The (3) digit alpha/numeric material code.

The following are example part numbers:

Prefix	Basic Number	Material Code
F6 For 8/6 FAH	147 Impeller F6147A03	A03 Ni-Hard
E4 For 6/4 EAH	110 Volute Liner E4110A05	A05 Hi-Chrome

You can use Warman components diagrams to determine part numbers for your pump minus the material code. Warman recommended spare parts lists should be used to verify the complete part number for your pump, including material codes.

If you have any question concerning the proper part number or material code for your application, please contact your Warman representative or the factory.

The following list depicts the basic part number and description for most Warman pump parts. This list will be useful in identifying basic part numbers referenced in the body of this text.

Basic Part Number	Part Name	Page Number
001	Adjusting Screw or Adjusting CAM	IV-1
003	Base	IV-1
004	Bearing Housing	II-2
005	Bearing Assembly	IV-1
008	Bearing Sleeve	III-2
009	Bearing	II-2
009D	Bearing (Drive End)	II-2
011	Clamp Washer	IV-1
012	Clamp Bolt	IV-1
013	Cover Plate	VI-1
015	Cover Plate Bolt	VI-2
017	Cover Plate Liner	VI-6
018	Cover Plate Liner -Throatbush Type	VI-7
023	Cover Plate Liner Set Screw or Stud	VI-6
024	End Cover	II-3
025	Shim Set	II-2
026	Frame Plate Liner Stud	VI-6
027	End Cover Set Screw	III-3
028	Expeller	V-6
029	Expeller Ring	V-6
029R	Expeller Ring	V-11
032	Frame Plate	VI-2
034	Frame Plate Bolt	—
036	Frame Plate Liner	VI-6
039	Frame Plate Stud	IV-2
040	Frame Plate Liner Insert Bolt	VI-1
041	Frame Plate Liner Insert	VI-1
044	Gland	V-1
045	Gland Bolt	V-1
046	Grease Retainer	II-2
060	Intake Joint	—
061	Labyrinth Locknut	II-6
062	Labyrinth	II-6
063	Lantern Ring	V-6
064	Impeller O-Ring	VI-1
067	Neck Ring	V-6
070	Shaft Key	VI-2
073	Shaft	II-2
075	Shaft Sleeve	V-1
078	Stuffing Box	V-1
079	Expeller Ring Stud	V-11
083	Throatbush	VI-3
085	Cotter	—

Basic Part Number	Part Name	Page Number
089	Bearing Seal	—
090	Shaft Seal	V-10
108	Piston Ring	III-5
109	Shaft Sleeve O-Ring	V-1
110	Volute Liner	VI-1
111	Packing	V-1
117	Shaft Spacer	V-1
118	Lantern Restrictor	V-1
122	Seal Ring	VI-1
124	Volute Liner Seal	VI-1
125	Volute Liner Seal	VI-1
126	Gland Clamp Bolt	V-1
132	Discharge Joint	V-6
138	Grease Cup Adaptor	V-6
147	Impeller	VI-1
179	Shaft Sleeve Spacer	—
217	Impeller O-Ring	VI-6
239	Release Collar	—
241	Lip Seal Gland	V-10
—	Grease Nipple	—
varies	Impeller	V I-1

PUMP ASSEMBLY TOOLS LIST

Basic Part Number	Part Name	Page Number
301	Piston Ring Compressor	II-6
302	Lifting Tube	—
303	Locating Nut	—
304	Volute Lifting Beam	—
305	"C" Spanner	II-7
306	Shaft Wrench	VI-2
307	Lifting Plate	II-5
310	Stuffing Box and Expeller Ring Lifting Beam	V-3
311	Shaft Lifting Nut	III-3

WARMAN PATENTS

To assure optimum performance of Warman pumps and to protect our customers from unknowledgeable, and hence dubious, attempts by others to produce apparent replacement parts for Warman Pumps, the following is advised.

Various Warman pump parts are patented under active U.S.A. patents. There are more Warman Pump patent applications are pending. Any attempt by others to produce pump parts which are patented by Warman will result in vigorous prosecution by Warman to the fullest extent that U.S.A. patent law allows.

REV. A 8/17/94 HJS

Raytheon Engineers & Constructors
A Consortium of Bechtel and UE&C

INDUCTION MOTOR DATA SHEET

CLIENT FMC CORP
PROJECT NOSAP
S-R JOB NO. 9353.001
ITEM NO. P-1350 1/S; P-2350 1/S; P-3350 1/S; P-4350 1/S; P-1351 1/S; P-2351 1/S; P-3351 1/S; P-4351 1/S

APPLICATION: SLURRY POT RECIRC PUMPS
MOTOR MANUFACTURER:
NO. REQ'D: 8

CONDITIONS OF SERVICE AND CONSTRUCTION FEATURES

NAMEPLATE HP 5 SYN SPEED 1800 RPM
VOLTS 460 PHASE 3 HZ 60
SERVICE FACTOR 1.15 TEMPERATURE RISE 80 °C
MULTISPEED:
☐ SINGLE WINDING ☐ TWO WINDING
☐ VARIABLE TORQUE ☐ CONSTANT HORSEPOWER
☐ CONSTANT TORQUE ☐
LOCATION: ALTITUDE 6600 FT DESIGN MAX. SITE TEMP. °C
AREA CLASSIFICATION: N/A CLASS
GROUP DIVISION
OPERATING ATMOSPHERE
ENCLOSURE: ☐ OPEN-DRIPPROOF ☐ TENV
☐ FORCED VENTILATED ■ TEFC
☐ WEATHER PROTECTED (I) (II) ■ MILL & CHEMICAL RESISTANT
☐ EXPLOSION PROOF WITH "T" CODE MARKING
☐ DUST-IGN. PROOF ☐
STARTING CONDITIONS:
☐ LOADED ☐ UNLOADED
■ FULL VOLTAGE ☐ REDUCED VOLTAGE
MINIMUM STARTING VOLTAGE, % OF RATED 80%
INSULATION: F ☐ ENCAPSULATED ☐ VPI ■ MFGRS. STANDARD
ROTATION FACING END OPP. DRIVE: ■ CLOCKWISE
☐ COUNTERCLOCKWISE
BEARINGS: ☐ ANTI FRICTION ☐ SPLIT SLEEVE
■ GREASE LUB. ☐ OIL LUB.
MOUNTING: ■ HORIZONTAL ☐ VERTICAL SOLID SHAFT
☐ VERTICAL HOLLOW SHAFT
DRIVE SYSTEM: ☐ DIRECT COUPLED ☐ GEAR UNIT
■ V BELTS ☐ CHAIN
☐ HALF COUPLING PRESSED ON BY MOTOR SUPPLIER
■ SHEAVE PRESSED ON BY ~~MOTOR~~ SUPPLIER (BY WARMAN)

ACCESSORY EQUIPMENT

☐ BASE PLATE SOLE PLATE BY:
☐ COUPLING FURN. BY:
☐ SPACE HEATER VOLTS PHASE
☐ AIR FILTERS ☐ GUARD SCREENS
☐ STATOR WINDING TEMPERATURE DETECTORS
☐ 120 OHM RTD. 2 PER PHASE. WIRED TO J.B.
☐ THERMOSTAT. 1 PER MOTOR. WIRED TO J.B.
☐ DRAIN/BREATHER
☐ CTS FOR DIFFERENTIAL PROTECTION. RATIO
☐ BEARING TEMPERATURE DETECTORS
☐ 120 OHM RTD. 1 PER BEARING. WIRED TO J.B.
☐ THERMOCOUPLE. 1 PER BEARING. WIRED TO J.B.
☐ BEARING OIL SUMP HEATERS
☐ BEARING VIBRATION DETECTORS
☐ SURGE CAPACITOR MTD. IN TERMINAL BOX
☐ MOTOR CONTROLLER BY MOTOR SUPPLIER
TERMINAL BOX:
■ SIZED FOR MOTOR LEADS ONLY
☐ OVERSIZED FOR MOTOR LEADS WITH STRESS CONES
☐ GROUND LUG MOUNTED INSIDE SIZE AWG

DATA SUPPLIED BY MOTOR MANUFACTURER OR BIDDER

FRAME NO. 184T NEMA DESIGN B
MOTOR TEMPERATURE RISE °C INSULATION CLASS

LOAD	1/2	3/4	FL	SF
EFFICIENCY	89.7	90.0	89.0	
CURRENT	3.5	4.7	6.1	
POWER FACTOR	75.2	83.4	86.4	
KW LOSSES				

LOCKED-ROTOR TORQUE 31.0 %
BREAKDOWN TORQUE 43.6 %
PULL-UP TORQUE 29.0 %
LOCKED-ROTOR CURRENT 45.0 %
LOCKED-ROTOR KVA CODE LETTER
LOCKED-ROTOR WITHSTAND TIME SEC. (COLD) SEC. (HOT)
SUCCESSIVE STARTING LIMITATIONS
FL SPEED 1748 RPM
FAN ROTATION: ☐ UNIDIRECTIONAL ☐ REVERSIBLE
LOAD WK² LB-FT²
ROTOR WK² LB-FT²
LOAD CAPABILITY WK² LB-FT²
SPACE HEATER WATTS N/A
MOTOR NET WEIGHT 121 LBS.
MAX. ERECTION WEIGHT 121 LBS.
MAX. OVERALL FT.: L 17.12" W 13.19" H 11.88"

ADDITIONAL SPECIFICATION REQUIREMENTS OR REMARKS:

REF: SAEC. ES-3-2-1
1- Must be Mill & Chemical Duty rated.
2- Insulation cannot contain silicone.
3. Fans shall be constructed of metal.

RAYTHEON ENGINEERS
c/o FMC CORPORATION
P.O. 9353.001 2001
PROJECT NO. 9353.001
WARMAN REFERENCE CO635

SLURRY POT RECIRCULATION PUMPS
P.O. NO.'S P-1350 (MDS12543MM)
P-1351 (MDS12544MM)
P-2350 (MDS12545MM)
P-2351 (MDS12546MM)
P-3350 (MDS12547MM)
P-3351 (MDS12549MM)
P-4350 (MDS12549MM)
P-4351 (MDS12550MM)

☒ FOR REVIEW OF REVISION
☐ W/COMMENT-RELEASED FOR FAB WITH COMMENT INCORP.
☐ FINAL REQUIRED
☐ NO COMMENT-RELEASED FOR FAB-FINAL REQUIRED
☐ NOT RELEASED FOR FAB - REVISE & RESUBMIT FOR REVIEW
☐ FINAL/NO RETURN REQ'D ☐ FOR INFO-NO RETURN REQ'D
DATE 11/21/94
BY
REVIEW DOES NOT RELIEVE CONTRACTOR FROM RESPONSIBILITY FOR COMPLIANCE WITH THE CONTRACT DOCUMENTS.

RAYTHEON ENGINEERS & CONSTRUCTORS ORIG
PROJECT NO 9353001
RECEIVED 11/03/94
FILE NO 10
PO NO 2001
REQN OR TASK 2001
TAG NO P-1350,1/2350,1/3350,1/4350,1

DUTY MASTER ALTERNATING CURRENT MOTORS

SQUIRREL-CAGE INDUCTION
X/T CONSTRUCTION

ENCLOSURE: TOTALLY ENCLOSED
MOUNTING: FOOT

COOLING: FAN COOLED

FRAMES 180T THRU 210T

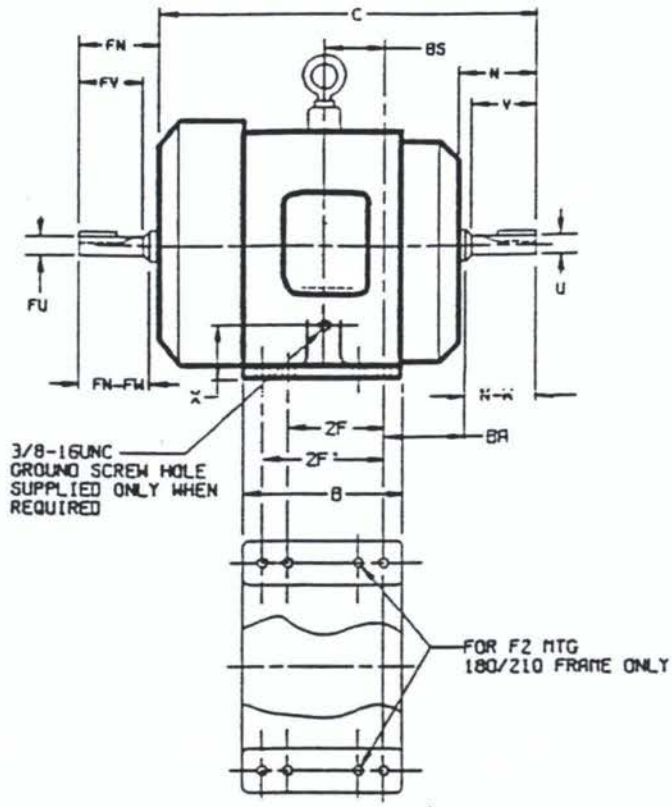

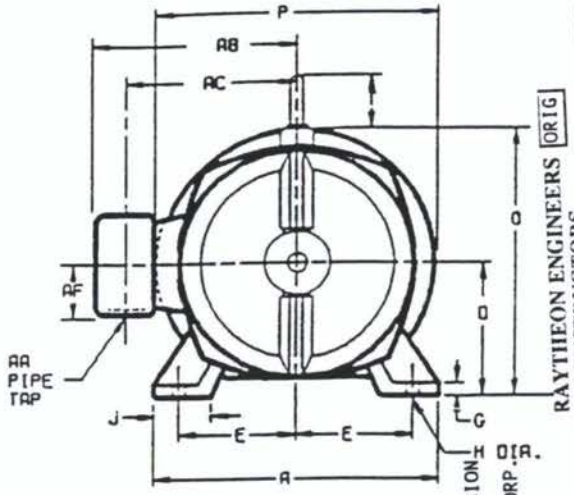

* STANDARD FRAMES HAVE 8 HOLES FOR DUAL MOUNTING AND F-2 CONVERSION

** LONG FRAMES HAVE 6 HOLES FOR DUAL MOUNTING. NOT SUITABLE FOR F-2 CONVERSION

SUBMITTED FOR INFORMATION ONLY

DIMENSIONS ARE IN INCHES

FRAME	A	D(3)	E	G	H	J	O	P	T	CAST IRON TERMINAL BOX AA	AB	AC	AF	BA	X
180T-L180T	9.00	4.50	3.75	.44	.44	1.75	9.88	9.50	2.00	1	8.44	6.69	2.12	2.75	1.25
210T-L210T	10.50	5.25	4.25	.44	.44	2.00	11.25	11.00	2.00	1	9.31	7.56	2.12	3.50	1.25
(1)															

FRAME SIZE	FOOT MTG PROV	C	BS	B	ZF	ZF*	D.E. SHAFT AND KEY N	N-W	U(2)	V	SQ.	LGTH.	FRONT END SHAFT AND KEY FN	FW-FW	FU(2)	FV	SQ.	LGTH.	WEIGHT LBS. (4)
180T	182T *	15.62	2.75	7.00	4.50	----	3.00	2.75	1.1250	2.50	.250	1.75	3.12	2.25	.8750	2.00	.188	1.38	86
	184T *				----	5.50													91
L180T	L182T **	17.12	3.50	8.50	4.50	----	3.00	2.75	1.1250	2.50	.250	1.75	3.12	2.25	.8750	2.00	.188	1.38	116
	L184T **				----	5.50													121
210T	213T *	19.31	3.50	8.50	5.50	----	3.62	3.38	1.3750	3.12	.312	2.38	3.75	2.75	1.1250	2.50	.250	1.75	135
	215T *				----	7.00													145
L210T	L213T **	20.19	3.94	9.12	5.50	----	3.62	3.38	1.3750	3.12	.312	2.38	3.75	2.75	1.1250	2.50	.250	1.75	175
	L215T **				----	7.00													185
(1)																			

(1) SPECIAL DIMENSIONS ON THIS LINE

(2) "U" AND "FU" MAY VARY +.0000. -.0005

(3) "D" MAY VARY +.00. -.03

(4) MOTOR WEIGHTS MAY VARY BY 15% FOR NON-STANDARD RATINGS.

STANDARD DOUBLE SHAFT SUPPLIED ONLY WHEN SPECIFIED.

TERMINAL BOX LOCATED ON OPPOSITE SIDE WHEN F-2. W-1. W-4. W-5. W-7 OR C-1 MOUNTING IS SPECIFIED.

MAXIMUM PERMISSIBLE SHAFT RUNOUT WHEN MEASURED AT END OF STANDARD SHAFT EXTENSION IS .002 T.I.R.

IF MOUNTING CLEARANCE DETAILS ARE REQUIRED. CONSULT FACTORY.

FRAME- L184T TYPE- TEFC-XEX (SEVERE DUTY, PREMIUM EFFICIENT)
HP- 5 RPM- 1800 PH- 3 HZ- 60 VOLTS 460

SLURRY POT RECIRCULATION PUMPS
EQ. NO.'S P-1350 (MDS12543MM) P-3350 (MDS12547MM)
P-1351 (MDS12544MM) P-3351 (MDS12549MM)
P-2350 (MDS12545MM) P-4350 (MDS12549MM)
P-2351 (MDS12546MM) P-4351 (MDS12550MM)

RAYTHEON ENGINEERS
C/O FMC CORPORATION
P.O. 9353.001 2001
PROJECT NO. 9353.001
WARMAN REFERENCE C06355

RAYTHEON ENGINEERS & CONSTRUCTORS ORIG

PROJECT NO 9353001
RECEIVED 10/06/94
FILE NO 4
PO NO 2001
REQN OR TASK 2001
TAG NO P-1350,1/2350,1/3350,1/4350,1

FOR INITIAL REVIEW OF REVISION
W/COMMENT-RELEASED FOR FINAL REQUIRED
NO COMMENT-RELEASED FOR FINAL-FINAL REQUIRED
NOT RELEASED FOR REVISE & RESUBMIT FOR REVIEW
FINAL-NO RETURN REQ'D
FOR INFO-NO RETURN REQ'D
DATE 11/21/94
BY
REVIEW DOES NOT RELIEVE CONTRACTOR FROM RESPONSIBILITY OF COMPLYING WITH CONTRACT DOCUMENTS.

RELIANCE ELECTRIC
CLEVELAND, OHIO 44117 U.S.A.

DR. BY K.ENGLISH
CK. BY R.L.BROWN
APP. BY G.KILBORN
DATE 12-18-85

DIMENSION SHEET 613051-501
ISSUE DATE: JULY 24.1986
SHEET 1 OF 1

ENGINEERING DATA
TYPICAL PERFORMANCE DATA

SUBMITTED FOR INFORMATION ONLY

TENV(1) & TEFC
SXE PLUS / XE • THREE-PHASE

HP	Synch RPM	Frame Size	Full Load RPM	Amps @ 460V		Torque (Ft-Lbs)			Full Load		NEMA Code
				Full Load	Locked Rotor	Full Load	Break Down	Locked Rotor	Nom. Eff.	Power Factor	
1/4	3600	56	3450	0.42	4.1	0.40	1.81	1.00	77.0	74.4	N
	1800	56	1750	0.44	3.4	0.77	3.31	2.06	81.5	66.0	M
	1200	56	1140	0.43	2.1	1.15	2.63	1.63	78.5	68.4	J
1/3	3600	56	3450	0.52	4.4	0.53	1.83	1.17	77.0	81.0	M
	1800	56	1750	0.53	4.3	1.00	4.13	2.88	82.5	68.2	N
	1200	56	1140	0.51	2.5	1.60	3.75	2.31	81.5	76.4	J
1/2	3600	56	3450	0.71	5.1	0.76	2.29	1.46	80.0	83.8	K
	1800	56	1750	0.76	7.0	1.50	6.81	4.49	84.0	72.9	N
	1200	56	1140	0.80	4.6	2.29	6.38	4.19	84.0	70.1	J
3/4	3600	56	3450	0.98	8.5	1.13	4.16	2.66	86.5	83.8	M
	1800	56	1750	1.1	9.5	2.26	7.13	6.63	86.5	77.5	M
	1200	56/143T	1140	1.3	6.4	3.49	9.50	6.08	84.0	66.0	J
1	3600	56/143T	3450	1.2	10.5	1.54	5.00	3.33	87.5	88.4	L
	1800	56/143T	1750	1.3	11.5	3.03	16.3	11.6	86.5	81.0	L
	1200	56/145T	1140	2.0	13.0	4.57	17.0	12.5	84.0	57.0	J
	900	L182T	870	1.7	9.1	6.04	17.7	9.80	82.5	64.4	J
1.5	3600	56/143T	3450	1.8	18.8	2.32	6.88	7.31	87.5	88.8	N
	1800	56/145T	1750	2.0	16.0	4.53	17.5	12.5	87.5	81.2	L
	1200	182T	1163	2.2	15.5	6.77	23.0	14.6	86.5	75.2	K
	900	L184T	867	2.4	13.4	9.09	26.0	14.5	84.0	67.8	J
2	3600	56/145T	3450	2.5	25.0	3.02	12.6	10.0	87.5	87.7	N
	1800	56/145T	1750	2.7	26.0	5.97	26.6	20.8	87.5	79.4	N
	1200	L184T	1163	2.8	20.0	9.03	30.5	20.0	87.5	76.2	J
	900	L213T	865	3.2	16.1	12.1	33.0	17.2	85.5	68.3	G
3	3600	182T	3519	3.6	32.0	4.48	16.4	8.50	88.5	89.5	K
	1800	182T	1758	3.8	31.0	8.96	31.4	21.3	88.5	83.9	K
	1200	213T	1170	4.2	31.0	13.5	45.4	24.0	89.5	74.5	K
	900	L215T	861	4.7	24.3	18.3	49.2	28.3	85.5	70.3	H
5	3600	184T	3494	6.0	45.0	7.52	23.6	13.1	88.5	90.2	J
	1800	L184T	1748	6.1	45.0	15.0	43.6	31.0	88.5	86.4	J
	1200	L215T	1167	6.8	46.0	22.5	69.0	38.0	89.5	77.0	J
	900	254T	883	7.2	46.0	29.7	95.0	48.0	89.5	72.5	J

RAYTHEON ENGINEERS
c/o FMC CORPORATION
P.O. 9353.001 2001
PROJECT NO. 9353.001
WARMAN REFERENCE CO6355

SLURRY POT RECIRCULATION PUMPS
EQ. NO.'S P-1350 (MDS12543MM)
P-1351 (MDS12544MM)
P-2350 (MDS12545MM)
P-2351 (MDS12546MM)
P-3350 (MDS12547MM)
P-3351 (MDS12549MM)
P-4350 (MDS12549MM)
P-4351 (MDS12550MM)

☒ FOR INITIAL REVIEW ☐ FOR REVIEW OF REVISION
☐ W/COMMENT-RELEASED FOR FAB WITH COMMENT INCORP. FINAL REQUIRED
☐ NO COMMENT-RELEASED FOR FAB-FINAL REQUIRED
☐ NOT RELEASED FOR FAB - REVISE & RESUBMIT FOR REVIEW
☒ FINAL-NO RETURN REQ'D ☐ FOR INFO-NO RETURN REQ'D
BY [signature] DATE 11/21/94
REVIEW DOES NOT RELIEVE CONTRACTOR FROM RESPONSIBILITY FOR COMPLIANCE WITH THE CONTRACT DOCUMENTS.

RAYTHEON ENGINEERS & CONSTRUCTORS ORIG
PROJECT NO 9353001
PO NO 2001 RECEIVED 10/06/94
REQN OR TASK 2001 FILE NO 5
TAG NO P-1350,1/2350,1/3350,1/4350,1

NOTES:
(1) *56 thru 140T frame performance data is valid for TENV or TEFC. 180T and larger frame performance data is valid for TEFC only.*

RELIANCE ELECTRIC

This performance data is for standard designs and should be used for estimating purposes only. Actual ratings may vary slightly from this data.

USER/LOCATION RAYTHEON ENGINEERS
CUST PO 9353.001 2001 WARMAN CO 6355 DATE 10-17-94
MODEL ID. K032CE0016355 DESC. ACCESSORY KIT 32C/184T/ZM CLASS 80

DESCRIPTION	PART NO.	NO. PER UNIT	WEIGHT	RECOMMENDED SPARES PER OPER. UNIT
DISCHARGE FLANGE 3/2 CAH	ZDF 30MS	1	9.7	
INTAKE FLANGE 3/2 CAH	ZIF 30MS	1	12.7	
MOTOR SUPPORT BOLT W/2 N	C 066E62	4	2.2	
MOTOR SUPPORT "C" CV/BLA	ZOH 71328	1		
1/4-20X1-1/2"HH BOLT,NUT	U04H1-006VJ	4	.2	
BELTGUARD CV"C"HINGED 2-	ZBG 64328	1		
3/8-16X2"BOLT,NUT&SPR.WA	U06H1-008VJ	4	.2	
MOTOR 5HP@1800/L184T PR.	ZMT 005XEX	1		
BELT WOODS AX56	VW AX56	2		
BUSHING WOODS SDS X 1 1/	VW SDS-1.125	1	1.5	
BUSHING WOODS SDS X 42MM	VW SDS-42MM	1	1.5	
SHEAVE WOODS 4.6PDXB2	VW 4.6PDXB2	1		
SHEAVE WOODS 6.8PDXB2	VW 6.8PDXB2	1		

10/14/94

RAYTHEON ENGINEERS & CONSTRUCTORS ORIG

PROJECT NO 9353001
PO NO 2001 RECEIVED 10/24/94
REQN OR TASK 2001 FILE NO 8
TAG NO P-1350,1/2350,1/3350,1/4350,1

☒ FOR INITIAL REVIEW ☐ FOR REVIEW OF REVISION

☐ W/COMMENT-RELEASED FOR FAB WITH COMMENT INCORP. FINAL REQUIRED
☐ NO COMMENT-RELEASED FOR FAB-FINAL REQUIRED

☐ NOT RELEASED FOR FAB - REVISE & RESUBMIT FOR REVIEW
☒ FINAL-NO RETURN REQ'D ☐ FOR INFO-NO RETURN REQ'D

BY [signature] DATE 11/21/94

REVIEW DOES NOT RELIEVE CONTRACTOR FROM RESPONSIBILITY FOR COMPLIANCE WITH THE CONTRACT DOCUMENTS.

RAYTHEON ENGINEERS & CONSTRUCTORS ORIG

PROJECT NO 9353001
PO NO 2001 RECEIVED 10/06/94
REQN OR TASK 2001 FILE NO 8
TAG NO ALL

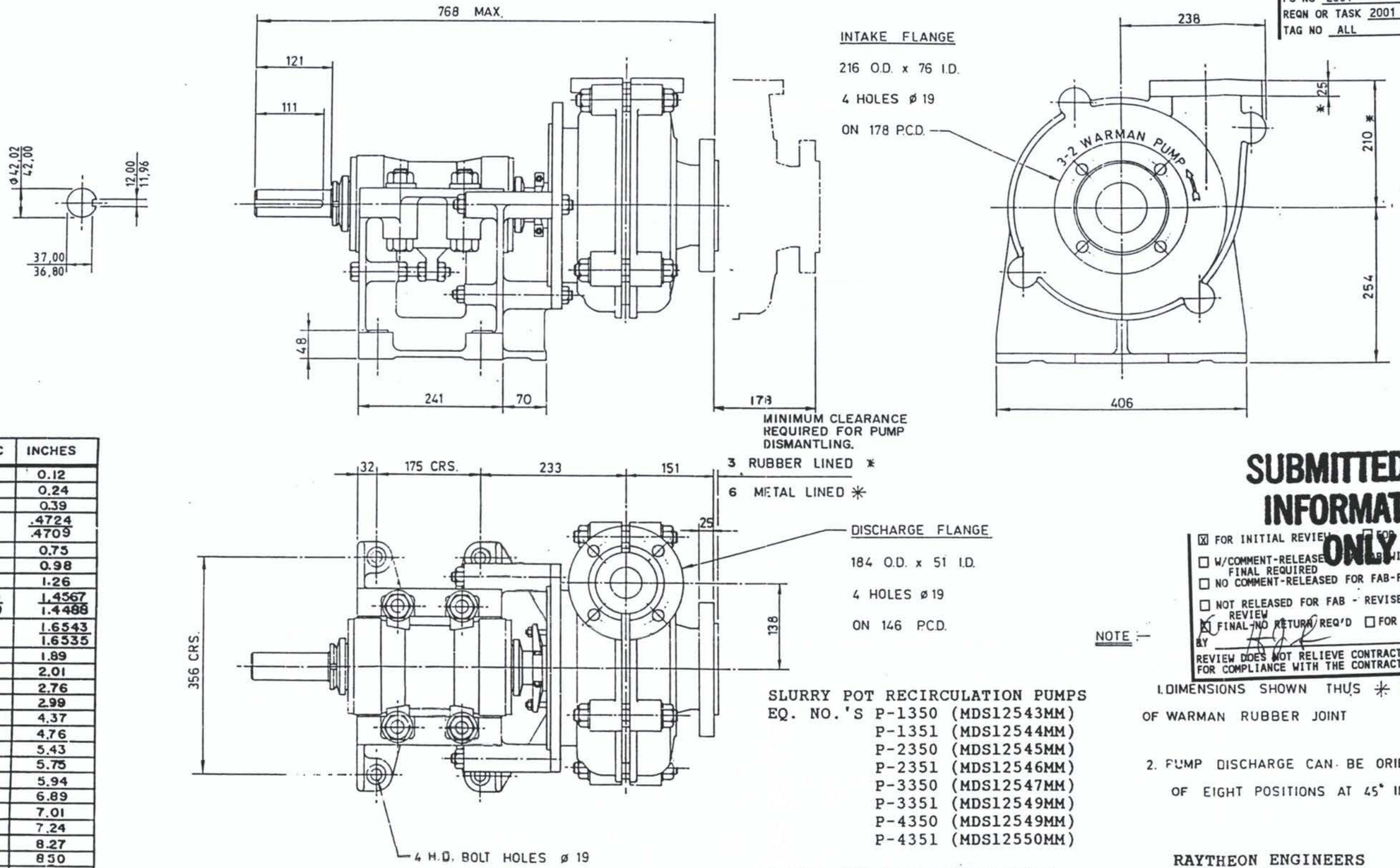

METRIC	INCHES
3	0.12
6	0.24
10	0.39
12.00 / 11.96	.4724 / .4709
19	0.75
25	0.98
32	1.26
37.00 / 36.80	1.4567 / 1.4488
42.02 / 42.00	1.6543 / 1.6535
48	1.89
51	2.01
70	2.76
76	2.99
111	4.37
121	4.76
138	5.43
146	5.75
151	5.94
175	6.89
178	7.01
184	7.24
210	8.27
216	8.50
233	9.17
238	9.37
241	9.49
254	10.00
356	14.02
406	15.98
768	30.24

SUBMITTED FOR INFORMATION ONLY

☒ FOR INITIAL REVIEW ☐ FOR REVIEW OF REVISION
☐ W/COMMENT-RELEASED FOR FAB WITH COMMENT INCORP. FINAL REQUIRED
☐ NO COMMENT-RELEASED FOR FAB-FINAL REQUIRED
☐ NOT RELEASED FOR FAB - REVISE & RESUBMIT FOR REVIEW
☒ FINAL-NO RETURN REQ'D ☐ FOR INFO-NO RETURN REQ'D
BY [signature] DATE 11/21/94
REVIEW DOES NOT RELIEVE CONTRACTOR FROM RESPONSIBILITY FOR COMPLIANCE WITH THE CONTRACT DOCUMENTS.

NOTE :-

1. DIMENSIONS SHOWN THUS * INCLUDES COMPRESSION OF WARMAN RUBBER JOINT

2. PUMP DISCHARGE CAN BE ORIENTATED IN ANY ONE OF EIGHT POSITIONS AT 45° INTERVALS

SLURRY POT RECIRCULATION PUMPS
EQ. NO.'S P-1350 (MDS12543MM)
P-1351 (MDS12544MM)
P-2350 (MDS12545MM)
P-2351 (MDS12546MM)
P-3350 (MDS12547MM)
P-3351 (MDS12549MM)
P-4350 (MDS12549MM)
P-4351 (MDS12550MM)

WASTE SLURRY TRANSFER PUMPS
EQ. NO.'S P-3700-A (MDS12551MM)
P-3700-B (MDS12552MM)

RAYTHEON ENGINEERS
c/o FMC CORPORATION
P.O. 9353.001 2001
PROJECT NO. 9353.001
WARMAN REFERENCE C06355

REVISION					
1				DRAWN	LMQ
2				CHECKED	AJG
3				JOB No.	
4	RUBBER JOINTS WERE UNCOMPRESSED	[signature]	26-9-83	MATL. LIST	
5	ADDED 178 CLEARANCE DIM.	DZ	2-15-85	REF. DRG. LIST	
6				ABRCT. DRG.	

WARMAN EQUIPMENT (INTERNATIONAL) LTD.
18-26 DICKSON AVENUE, ARTARMON, NEW SOUTH WALES, AUSTRALIA

WARMAM SERIES "A" PUMP
TYPE 3/2 C-AH
OUTLINE DIMENSIONS

SCALE
DATE
METRIC
CSY5299/5

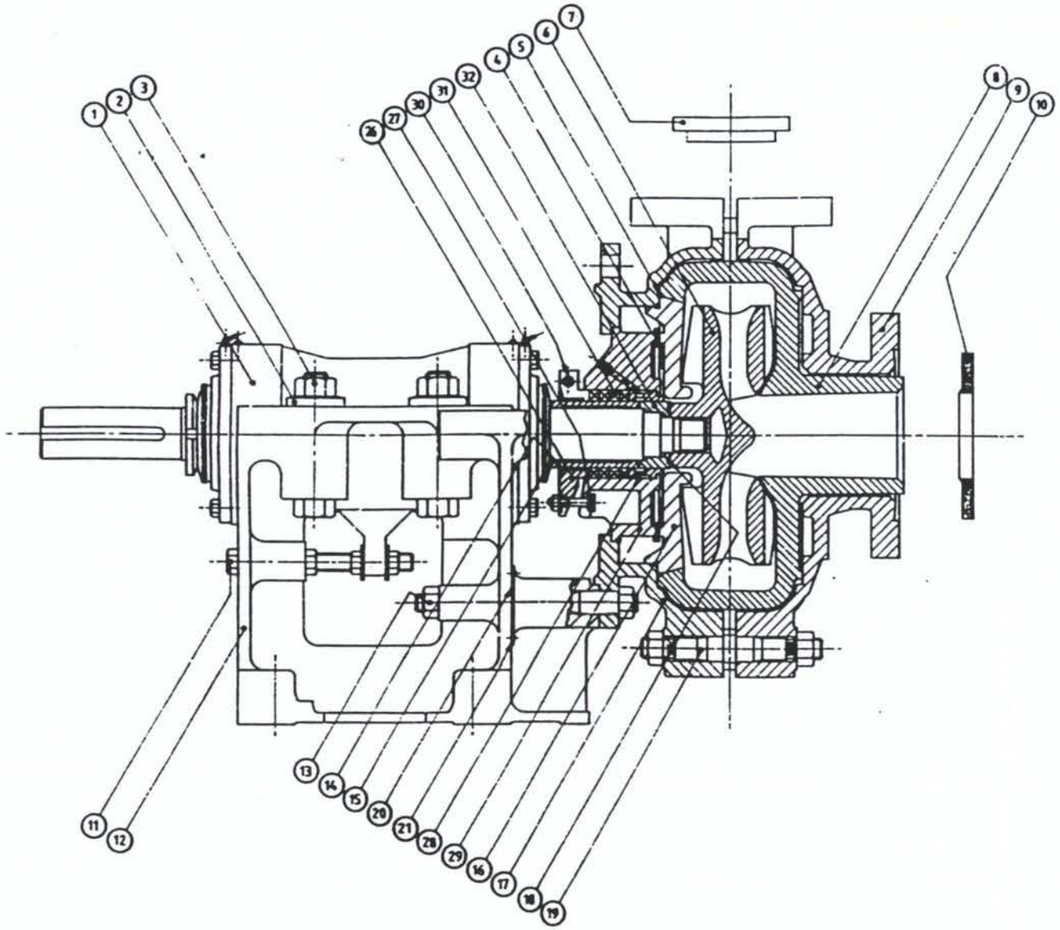

ITEM	QTY	DESCRIPTION		PART Nº
1	1	BEARING ASSEMBLY (REF DRG. A1-104755)		C005M
2	4	CLAMP WASHER		C011
3	4	CLAMP BOLT M20H1-120CN		C012M
4	1	SEAL RING		C122
5	1	VOLUTE FRAME SEAL		C212S
6	1	IMPELLER (AS SELECTED)		
7	1	DISCHARGE JOINT		C2132L
8	1	VOLUTE LINER		C2110NA
9	1	COVER PLATE		C2013
10	1	INTAKE JOINT		C2060
11	1	ADJUSTING SCREW-3 NUTS-2 WASHERS		C001M
12	1	BASE		C003M
13	3	FRAME PLATE STUD-2 NUTS		C039M
14	1	SHAFT SLEEVE		C075
15	2	SHAFT SLEEVE 'O' RING 26T47N134		C109
16	1	FRAME PLATE LINER INSERT		C2041NA
17	1	FRAME PLATE		C2032
18	1	IMPELLER 'O' RING 35"51N223		C217
19	4	COVER PLATE BOLT-2 NUTS		C015M
20	1	NAMEPLATE B6		——
21	4	NAMEPLATE RIVET TLP/D424BS		——
22				
23				
24				
25				
		GLAND SEAL ONLY		
26	1	GLAND (2 PIECE)		C044
27	2	GLAND BOLT - 1 NUT - 1 WASHER		C045M
28	1	LANTERN RESTRICTOR		C118
29	1	STUFFING BOX		C078
30	2	GLAND CLAMP BOLT M8H1-60SN		C126M
31	4	PACKING		C111
32	1	SHAFT SPACER		C117
33				
34				
35				
36				
37				

RAYTHEON ENGINEERS & CONSTRUCTORS ORIG

PROJECT NO 9353001
PO NO 2001 RECEIVED 10/06/94
REQN OR TASK 2001 FILE NO 7
TAG NO P-1350,1/2350,1/3350,1/4350,1

☒ FOR INITIAL REVIEW ☐ FOR REVIEW OF REVISION
☐ W/COMMENT-RELEASED FOR FAB WITH COMMENT INCORP. FINAL REQUIRED
☐ NO COMMENT-RELEASED FOR FAB-FINAL REQUIRED
☐ NOT RELEASED FOR FAB - REVISE & RESUBMIT FOR REVIEW
☒ FINAL-NO RETURN REQ'D ☐ FOR INFO-NO RETURN REQ'D
BY DATE 11/21/94
REVIEW DOES NOT RELIEVE CONTRACTOR FROM RESPONSIBILITY FOR COMPLIANCE WITH THE CONTRACT DOCUMENTS.

SLURRY POT RECIRCULATION PUMPS
EQ. NO.'S P-1350 (MDS12543MM)
P-1351 (MDS12544MM)
P-2350 (MDS12545MM)
P-2351 (MDS12546MM)
P-3350 (MDS12547MM)
P-3351 (MDS12549MM)
P-4350 (MDS12549MM)
P-4351 (MDS12550MM)

RAYTHEON ENGINEERS
c/o FMC CORPORATION
P.O. 9353.001 2001
PROJECT NO. 9353.001
WARMAN REFERENCE C06355

SUBMITTED FOR INFORMATION ONLY

No.	DESCRIPTION	BY	DATE
5			
4			
3	LINE 7: PART No. WAS "C2132LP"		
2	ITEMS 27,52 WERE M10S1-40SC	GBG	6.8.82
1	REDRAWN	LMQ	6.11.80

REVISIONS

APP.
CHECK
DRN. LMQ
DATE 6.11.80
SCALE ——

WARMAN PUMP
3/2 C-AH METAL LINED
COMPONENTS DIAGRAM

WARMAN INTERNATIONAL LTD.
OFFICE OF ORIGIN: SYDNEY

A1— 110 -0-102905 REV 3

SUBMITTED FOR INFORMATION ONLY

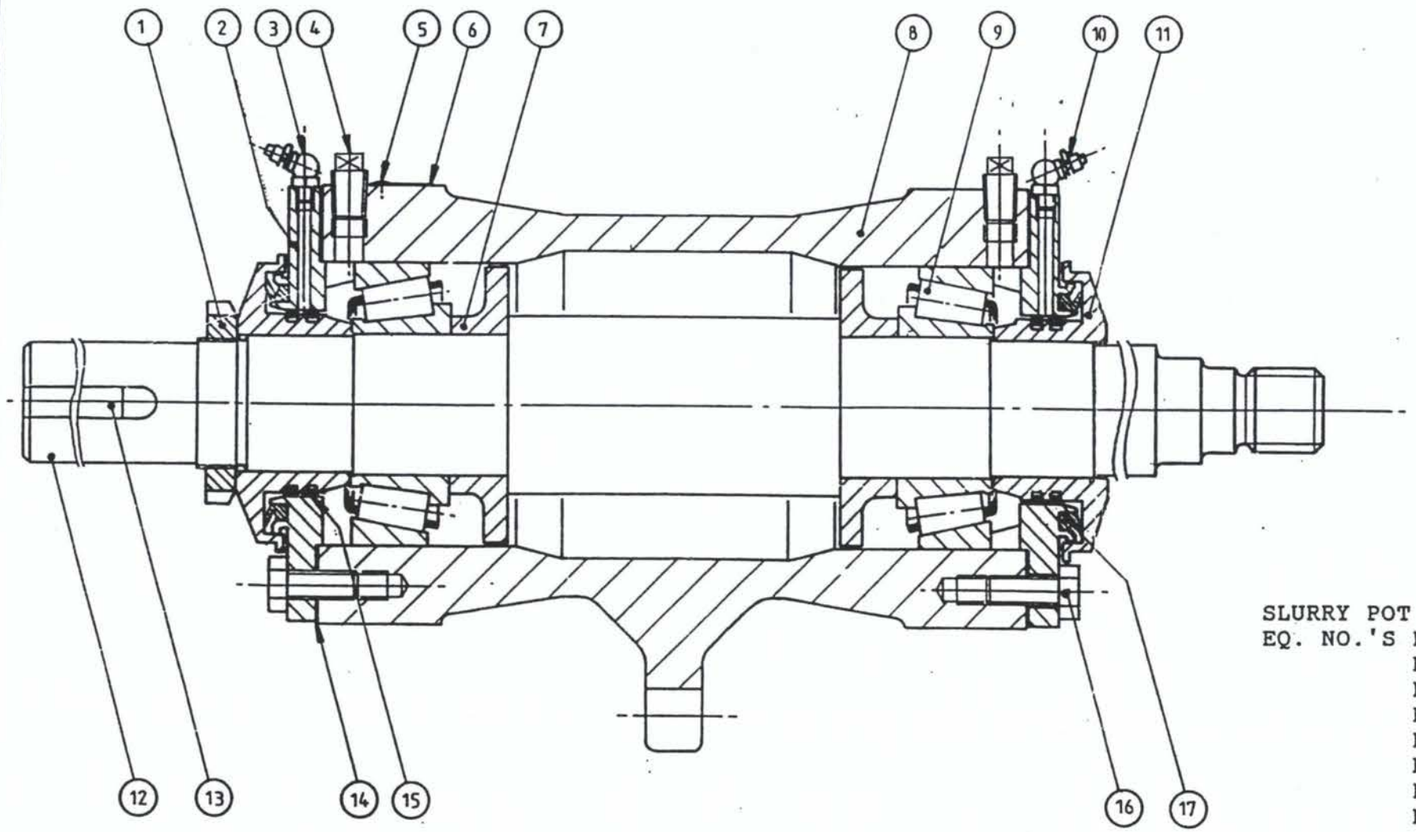

ITEM	QTY	DESCRIPTION		PART No.
1	1	LABYRINTH LOCKNUT		C061
2	2	END COVER		C024-10
3	2	GREASE NIPPLE		UF4L73-Z
4	2	PLUG		WP4P1-E
5	2	NAMEPLATE RIVET TLP/0424BS		———
6	1	NAMEPLATE S32		———
7	2	GREASE RETAINER		C046
8	1	BEARING HOUSING		C004M
9	2	BEARING		C009
10	2	GREASE CAP		A365
11	2	LABYRINTH		C062-10
12	1	SHAFT		C073M
13	1	SHAFT KEY		C070M
14	1	SHIM SET		C025
15	4	PISTON RING		C108
16	8	END COVER SET SCREW M10H2-25Z		B027M
17	2	BEARING SEAL		C089-10

RAYTHEON ENGINEERS & CONSTRUCTORS ORIG
PROJECT NO 9353001
PO NO 2001 RECEIVED 10/06/94
REQN OR TASK 2001 FILE NO 17
TAG NO ALL
☒ FOR INITIAL REVIEW ☐ FOR REVIEW OF REVISION
☐ W/COMMENT-RELEASED FOR FAB WITH COMMENT INCORP. FINAL REQUIRED
☐ NO COMMENT-RELEASED FOR FAB-FINAL REQUIRED
☐ NOT RELEASED FOR FAB - REVISE & RESUBMIT FOR REVIEW
☒ FINAL-NO RETURN REQ'D ☐ FOR INFO-NO RETURN REQ'D
BY DATE 11/2/94
REVIEW DOES NOT RELIEVE CONTRACTOR FROM RESPONSIBILITY FOR COMPLIANCE WITH THE CONTRACT DOCUMENTS.

SLURRY POT RECIRCULATION PUMPS
EQ. NO.'S P-1350 (MDS12543MM)
P-1351 (MDS12544MM)
P-2350 (MDS12545MM)
P-2351 (MDS12546MM)
P-3350 (MDS12547MM)
P-3351 (MDS12549MM)
P-4350 (MDS12549MM)
P-4351 (MDS12550MM)

WASTE SLURRY TRANSFER PUMPS
EQ. NO.'S P-3700-A (MDS12551MM)
P-3700-B (MDS12552MM)

RAYTHEON ENGINEERS
c/o FMC CORPORATION
P.O. 9353.001 2001
PROJECT NO. 9353.001
WARMAN REFERENCE C06355

© PEKO-WALLSEND OPERATIONS LIMITED 1989. PEKO-WALLSEND OPERATIONS LIMITED is the owner of the copyright subsisting in this drawing and these designs, specifications and instructions. They must not be used, reproduced or copied in whole or in part, in any form or by any means, nor may the information therein contained, which is confidential to PEKO-WALLSEND OPERATIONS LIMITED and its related company WARMAN INTERNATIONAL LTD. be disclosed to any person, without the prior written consent of PEKO-WALLSEND OPERATIONS LIMITED.
The drawing has been delivered and received on the express conditions that it may be used only for the specific purpose for which it has been provided, may not be used in any way which may injure or cause loss directly or indirectly to PEKO-WALLSEND OPERATIONS LIMITED or WARMAN INTERNATIONAL LTD or any related corporation of either company and will be returned to WARMAN INTERNATIONAL LTD immediately on completion of the task for which it has been provided, or on demand.

No.	DESCRIPTION	BY	DATE
6			
5			
4			
3	REDRAWN WITH C410-10 END COVER ASSEMBLY	BMCH	14.4.89

REVISIONS

APP.	KEB
CHECK	Ø.
DRN.	B.McH
DATE	14.4.89
SCALE	———

WARMAN PUMP
BEARING ASSEMBLY - C005M
COMPONENTS DIAGRAM

WARMAN INTERNATIONAL LTD.

OFFICE OF ORIGIN: SYDNEY

A3-110-0-104755

REV. 3

3

APPENDIX 6
SLURRY POT SYSTEM DRAWINGS

APPENDIX 6 SLURRY POT SYSTEM DRAWINGS

P&IDs

398245 - First Pass Slurry Pot, No 4 Furnace, Rev 8
399459 – Second Pass Slurry Pot, No. 4 Furnace, Rev. 5

SLURRY POT DRAWINGS

395613 – Details 1st Pass Slurry Tank No. 4 Furnace (East), Rev 4
395614 – Details 2nd Pass Slurry Tank No. 4 Furnace (West), Rev 3
398322 – Details Precipitator Slurry Tanks, Rev 0

PIPING DRAWINGS

398266 – Piping Plan Furnace #4 1st /2nd Pass Slurry Pots, Rev 5
398276 – Piping Misc. Details & Sections Furnace Area, Rev 0

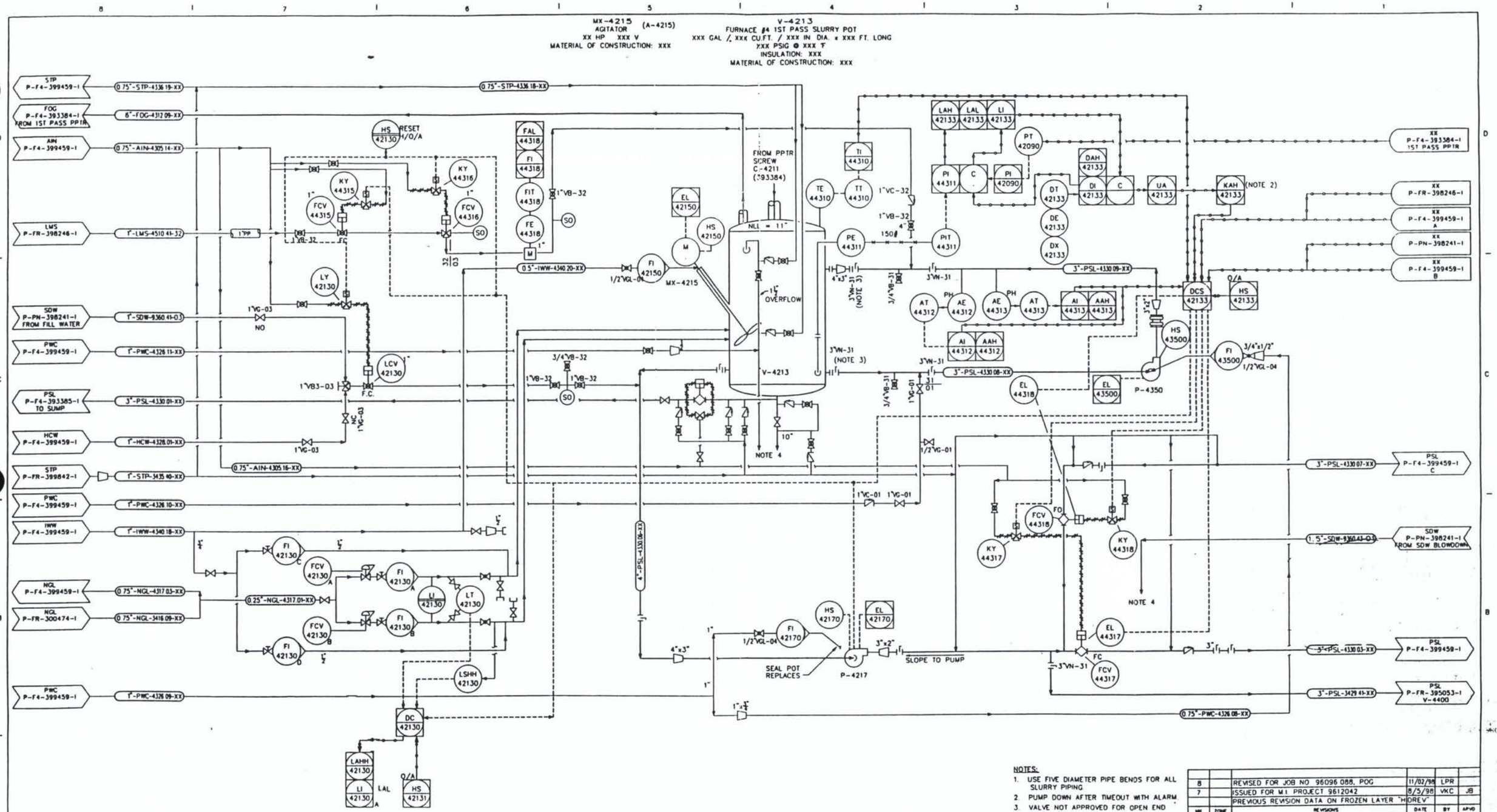

NOTES:

1. USE FIVE DIAMETER PIPE BENDS FOR ALL SLURRY PIPING.
2. PUMP DOWN AFTER TIMEOUT WITH ALARM.
3. VALVE NOT APPROVED FOR OPEN END SHUTOFF.
4. DRAINS TO SUMP V-4400.

FMC POCATELLO, IDAHO

P&ID COPY FROM "PFD PID RELEASE" VAULT. ISSUED FOR REFERENCE ONLY TO P.O.G. PROJ /RE&C/LGP 10/21/98 BY JCF

P-4217
FURNACE #4 1ST PASS WASTE SLURRY PUMP
30 GPM @ 90 PSIG
15 HP XXX V
MATERIAL OF CONSTRUCTION: XXX

P-4350
FURNACE #4 1ST PASS SLURRY RECIRCULATION PUMP
100 GPM @ 20 PSIG
5 HP XXX V
MATERIAL OF CONSTRUCTION: XXX

Raytheon Engineers & Constructors

DRAWING STATUS

STATUS	ISSUE	DATE	SDE	PEM
FOR APPROVAL	6	11/5/98	KSM	CTL
APPROVED FOR CONSTRUCTION				
REVISED & APPROVED FOR CONSTRUCTION				

NOT APPROVED FOR CONSTRUCTION UNLESS SIGNED & DATED. DESTROY ALL PRINTS BEARING EARLIER DATE &/OR REV NO

MK	ZONE	REVISIONS	DATE	BY	APVD
8		REVISED FOR JOB NO 96096 088, POG	11/02/98	LPR	
7		ISSUED FOR M.I. PROJECT 9612042	8/5/98	VKC	JB
		PREVIOUS REVISION DATA ON FROZEN LAYER "HDREV"			

PHOSPHORUS CHEMICAL DIVISION
FMC CORPORATION
POCATELLO, IDAHO

REFERENCE DRAWINGS

P & ID
1ST PASS SLURRY POT

NO. 4 FURNACE

DRAWN DL 8/5/94 APPROVED
CHECKED APPROVED

CHG C94-20 SCALE NONE

THIS PRINT AND ALL INFORMATION THEREON IS OUR PROPERTY IS CONFIDENTIAL AND MUST NOT BE MADE PUBLIC OR COPIED UNLESS AUTHORIZED BY US. IT IS SUBJECT TO RETURN ON DEMAND
PHOSPHORUS CHEMICAL DIVISION

DRAWING IDENTIFIER

PLANT	SITE	DRAWING NO	DISC	REV
P	F4	398245	1	8

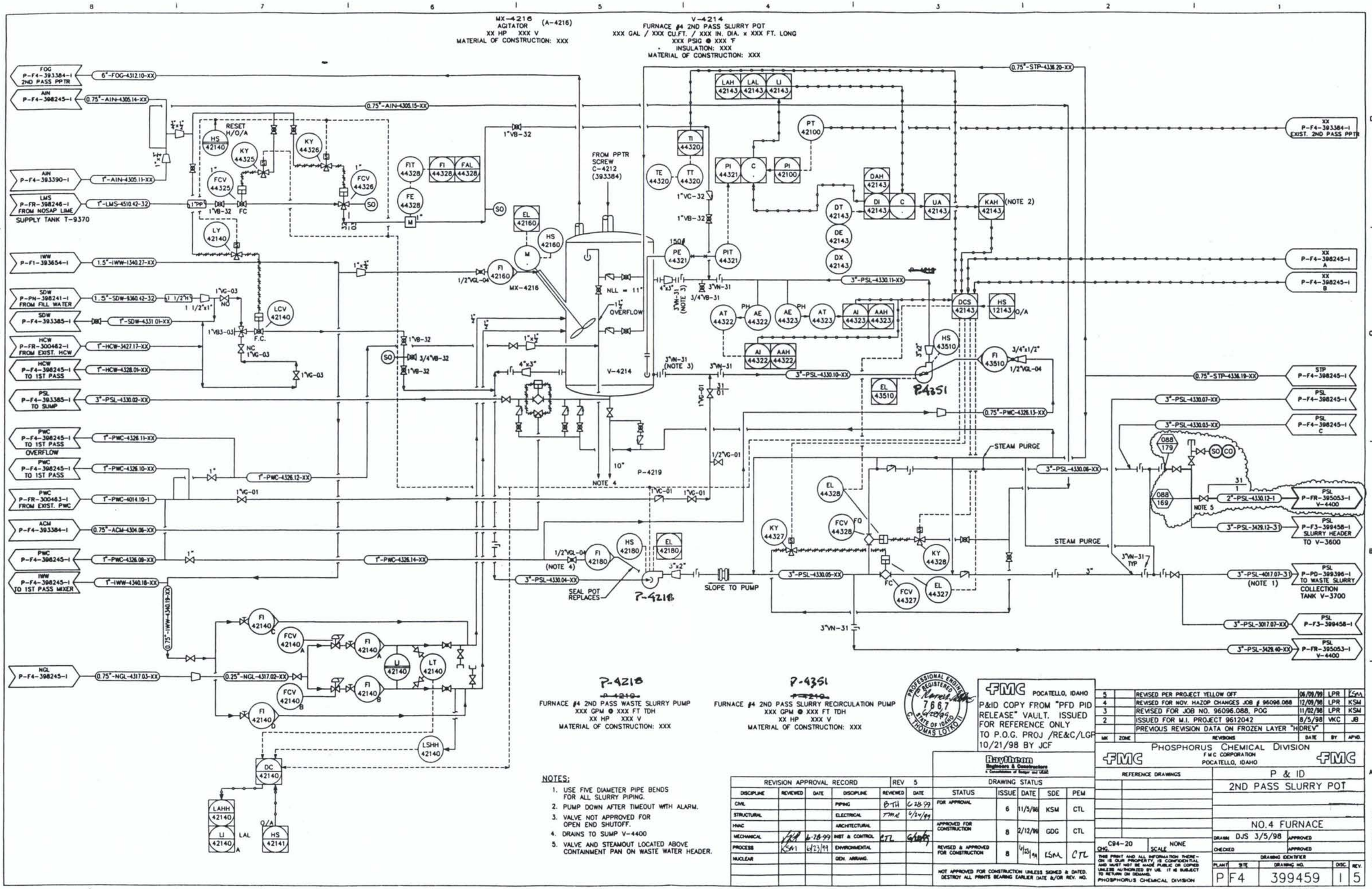

P-4218

~~P-4219~~

FURNACE #4 2ND PASS WASTE SLURRY PUMP
XXX GPM @ XXX FT TDH
XX HP XXX V
MATERIAL OF CONSTRUCTION: XXX

P-4351

~~P-4219~~

FURNACE #4 2ND PASS SLURRY RECIRCULATION PUMP
XXX GPM @ XXX FT TDH
XX HP XXX V
MATERIAL OF CONSTRUCTION: XXX

NOTES:

1. USE FIVE DIAMETER PIPE BENDS FOR ALL SLURRY PIPING.
2. PUMP DOWN AFTER TIMEOUT WITH ALARM.
3. VALVE NOT APPROVED FOR OPEN END SHUTOFF.
4. DRAINS TO SUMP V-4400
5. VALVE AND STEAMOUT LOCATED ABOVE CONTAINMENT PAN ON WASTE WATER HEADER.

PROFESSIONAL ENGINEER REGISTERED 7667 STATE OF IDAHO C. THOMAS LOTKOTT

FMC POCATELLO, IDAHO
P&ID COPY FROM "PFD PID RELEASE" VAULT. ISSUED FOR REFERENCE ONLY TO P.O.G. PROJ /RE&C/LGF 10/21/98 BY JCF

REVISION APPROVAL RECORD					REV 5
DISCIPLINE	REVIEWED	DATE	DISCIPLINE	REVIEWED	DATE
CIVIL			PIPING	B-TH	6-28-99
STRUCTURAL			ELECTRICAL	TMR	6/24/99
HVAC			ARCHITECTURAL		
MECHANICAL		6-28-99	INST & CONTROL	CTL	
PROCESS	KSM	6/23/99	ENVIRONMENTAL		
NUCLEAR			GEN. ARRANG.		

Raytheon Engineers & Constructors

DRAWING STATUS				
STATUS	ISSUE	DATE	SDE	PEM
FOR APPROVAL	6	11/5/98	KSM	CTL
APPROVED FOR CONSTRUCTION	8	2/12/99	GDG	CTL
REVISED & APPROVED FOR CONSTRUCTION	8	6/23/99	KSM	CTL

NOT APPROVED FOR CONSTRUCTION UNLESS SIGNED & DATED. DESTROY ALL PRINTS BEARING EARLIER DATE &/OR REV. NO.

MK	ZONE	REVISIONS	DATE	BY	APVD.
5		REVISED PER PROJECT YELLOW OFF	06/09/99	LPR	KSM
4		REVISED FOR NOV. HAZOP CHANGES JOB # 96096.088	12/09/98	LPR	KSM
3		REVISED FOR JOB NO. 96096.088, POG	11/02/98	LPR	KSM
2		ISSUED FOR M.I. PROJECT 9612042	8/5/98	VKC	JB
		PREVIOUS REVISION DATA ON FROZEN LAYER "H" REV			

FMC PHOSPHORUS CHEMICAL DIVISION
FMC CORPORATION
POCATELLO, IDAHO FMC

REFERENCE DRAWINGS

P & ID
2ND PASS SLURRY POT

NO.4 FURNACE

DRAWN DJS 3/5/98 APPROVED
CHECKED APPROVED

CHG. C94-20 SCALE NONE

THIS PRINT AND ALL INFORMATION THEREON IS OUR PROPERTY, IS CONFIDENTIAL AND MUST NOT BE MADE PUBLIC OR COPIED UNLESS AUTHORIZED BY US. IT IS SUBJECT TO RETURN ON DEMAND.
PHOSPHORUS CHEMICAL DIVISION

DRAWING IDENTIFIER

PLANT	SITE	DRAWING NO.	DISC.	REV.
P	F4	399459	1	5

1 K399459.DWG 1 PRINT DATE:

ORIGINAL

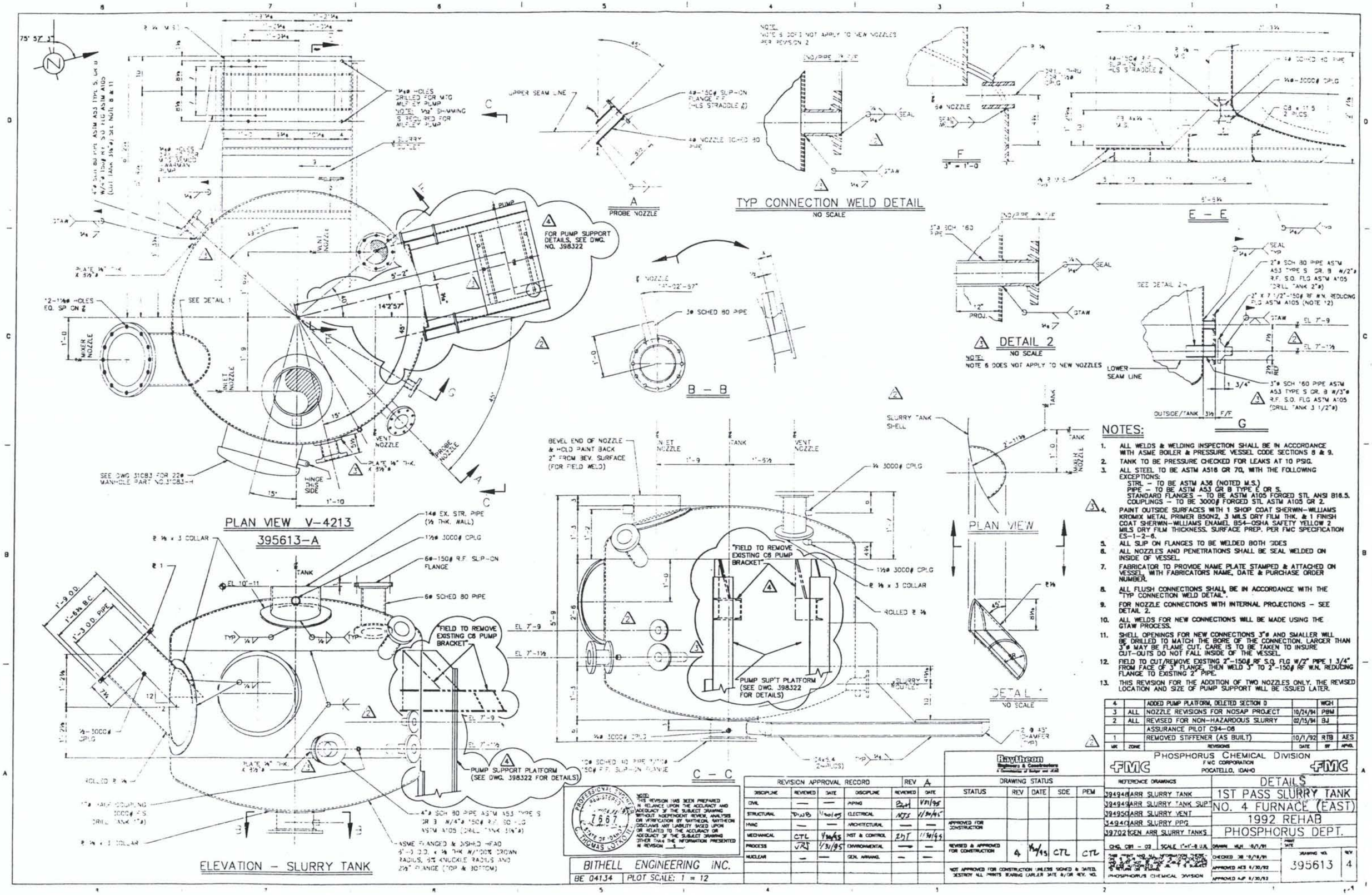

NOTES:

1. ALL WELDS & WELDING INSPECTION SHALL BE IN ACCORDANCE WITH ASME BOILER & PRESSURE VESSEL CODE SECTIONS 8 & 9.
2. TANK TO BE PRESSURE CHECKED FOR LEAKS AT 10 PSIG.
3. ALL STEEL TO BE ASTM A516 GR 70, WITH THE FOLLOWING EXCEPTIONS:
   STRL – TO BE ASTM A36 (NOTED M.S.)
   PIPE – TO BE ASTM A53 GR B TYPE E OR S.
   STANDARD FLANGES – TO BE ASTM A105 FORGED STL ANSI B16.5.
   COUPLINGS – TO BE 3000# FORGED STL ASTM A105 GR 2.
4. PAINT OUTSIDE SURFACES WITH 1 SHOP COAT SHERWIN–WILLIAMS KROMIX METAL PRIMER B50N2, 3 MILS DRY FILM THK. & 1 FINISH COAT SHERWIN–WILLIAMS ENAMEL B54–OSHA SAFETY YELLOW 2 MILS DRY FILM THICKNESS. SURFACE PREP. PER FMC SPECIFICATION ES–1–2–6.
5. ALL SLIP ON FLANGES TO BE WELDED BOTH SIDES
6. ALL NOZZLES AND PENETRATIONS SHALL BE SEAL WELDED ON INSIDE OF VESSEL.
7. FABRICATOR TO PROVIDE NAME PLATE STAMPED & ATTACHED ON VESSEL, WITH FABRICATORS NAME, DATE & PURCHASE ORDER NUMBER.
8. ALL FLUSH CONNECTIONS SHALL BE IN ACCORDANCE WITH THE "TYP CONNECTION WELD DETAIL".
9. FOR NOZZLE CONNECTIONS WITH INTERNAL PROJECTIONS – SEE DETAIL 2.
10. ALL WELDS FOR NEW CONNECTIONS WILL BE MADE USING THE GTAW PROCESS.
11. SHELL OPENINGS FOR NEW CONNECTIONS 3"# AND SMALLER WILL BE DRILLED TO MATCH THE BORE OF THE CONNECTION. LARGER THAN 3"# MAY BE FLAME CUT. CARE IS TO BE TAKEN TO INSURE CUT–OUTS DO NOT FALL INSIDE OF THE VESSEL.
12. FIELD TO CUT/REMOVE EXISTING 2"–150# RF S.O. FLG W/2" PIPE 1 3/4" FROM FACE OF 3" FLANGE, THEN WELD 3" TO 2"–150# RF W.N. REDUCING FLANGE TO EXISTING 2" PIPE.
13. THIS REVISION FOR THE ADDITION OF TWO NOZZLES ONLY. THE REVISED LOCATION AND SIZE OF PUMP SUPPORT WILL BE ISSUED LATER.

4		ADDED PUMP PLATFORM, DELETED SECTION D		WGH	
3	ALL	NOZZLE REVISIONS FOR NOSAP PROJECT	10/24/94	PBM	
2	ALL	REVISED FOR NON–HAZARDOUS SLURRY	02/15/94	BJ	
		ASSURANCE PILOT C94–06			
1		REMOVED STIFFENER (AS BUILT)	10/1/92	RTB	AES
NR	ZONE	REVISIONS	DATE	BY	APVD.

PHOSPHORUS CHEMICAL DIVISION
FMC CORPORATION
POCATELLO, IDAHO

REVISION APPROVAL RECORD — REV A

DISCIPLINE	REVIEWED	DATE	DISCIPLINE	REVIEWED	DATE
CIVIL	—	—	PIPING	[illegible]	1/31/95
STRUCTURAL	[illegible]	1/30/95	ELECTRICAL	NTS	1/30/95
HVAC	—	—	ARCHITECTURAL	—	—
MECHANICAL	CTL	1/30/95	INST & CONTROL	[illegible]	1/30/95
PROCESS	[illegible]	1/31/95	ENVIRONMENTAL	—	—
NUCLEAR	—	—	GEN. ARRANGE.	—	—

NOTE: THIS REVISION HAS BEEN PREPARED IN RELIANCE UPON THE ACCURACY AND ADEQUACY OF THE SUBJECT DRAWING WITHOUT INDEPENDENT REVIEW, ANALYSIS OR VERIFICATION BY RAYTHEON. RAYTHEON DISCLAIMS ANY LIABILITY BASED UPON OR RELATED TO THE ACCURACY OR ADEQUACY OF THE SUBJECT DRAWING OTHER THAN THE INFORMATION PRESENTED IN REVISION 4.

PROFESSIONAL ENGINEER REGISTERED 7567 STATE OF IDAHO THOMAS LOFKOTTE

BITHELL ENGINEERING INC.
BE 04134 | PLOT SCALE: 1 = 12

Raytheon Engineers & Constructors

DRAWING STATUS

STATUS	REV	DATE	SDE	PEM
APPROVED FOR CONSTRUCTION				
REVISED & APPROVED FOR CONSTRUCTION	4	1/31/95	CTL	CTL

NOT APPROVED FOR CONSTRUCTION UNLESS SIGNED & DATED. DESTROY ALL PRINTS BEARING EARLIER DATE &/OR REV. NO.

REFERENCE DRAWINGS	
394948	ARR SLURRY TANK
394949	ARR SLURRY TANK SUP'T
394950	ARR SLURRY VENT
394940	ARR SLURRY PPG
397021	GEN ARR SLURRY TANKS

DETAILS
1ST PASS SLURRY TANK
NO. 4 FURNACE (EAST)
1992 REHAB
PHOSPHORUS DEPT.

CHG. CBI – 02 | SCALE 1"=1'-0 U.N. | DRAWN WLH 10/1/91 | CHECKED JB 10/18/91 | APPROVED AES 6/30/92 | APPROVED AJP 6/30/93

THIS DRAWING AND ALL INFORMATION HEREIN IS THE PROPERTY OF FMC & SUBJECT TO RECALL BY FMC

PHOSPHORUS CHEMICAL DIVISION

DRAWING NO. 395613 | REV. 4

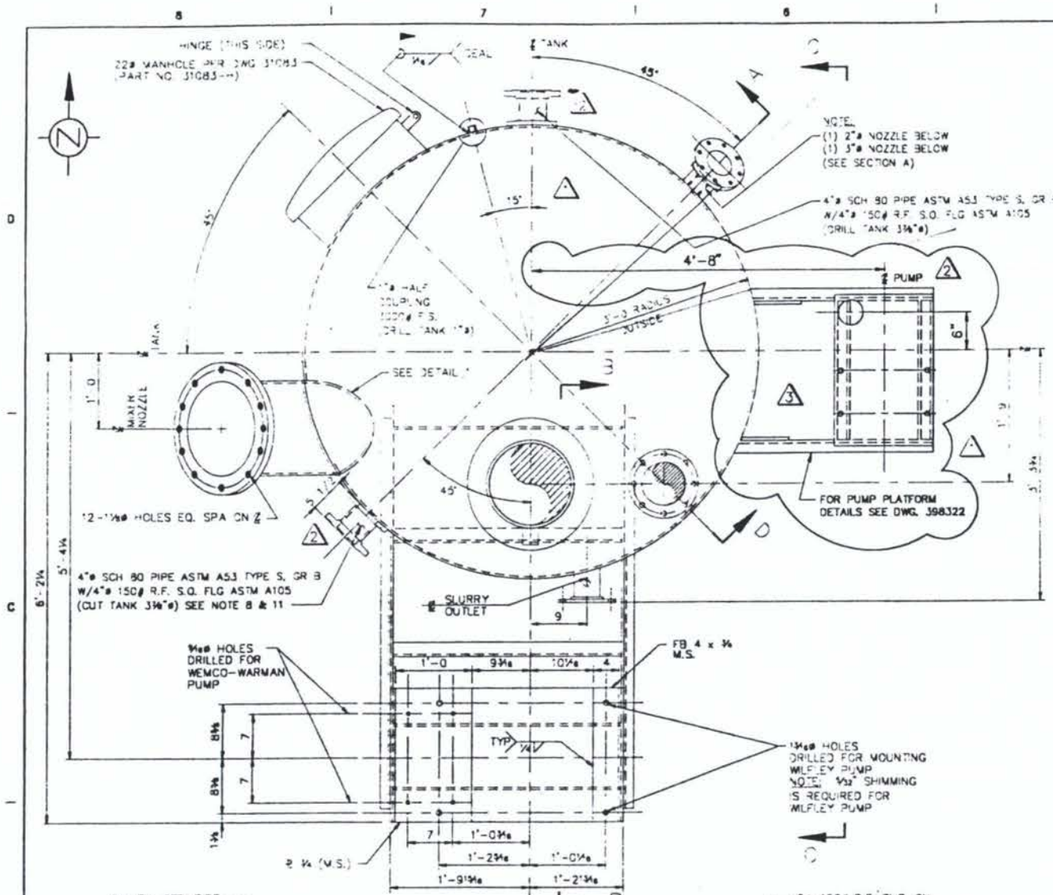

PLAN VIEW V-4214
395614-A

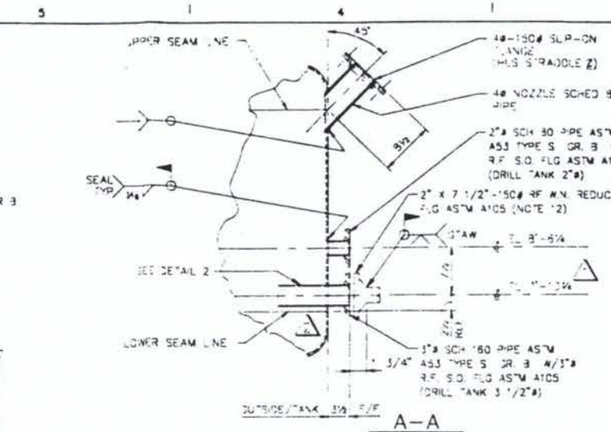

A–A

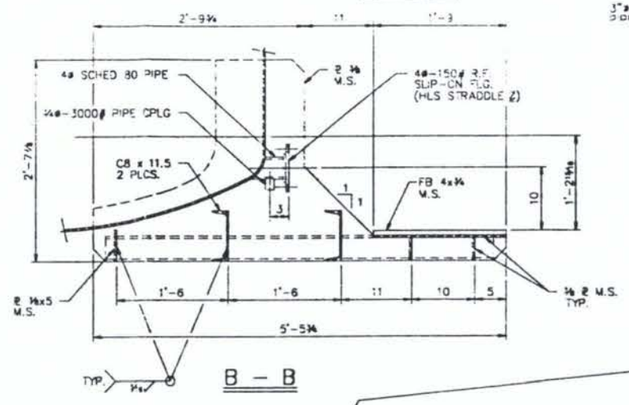

B – B

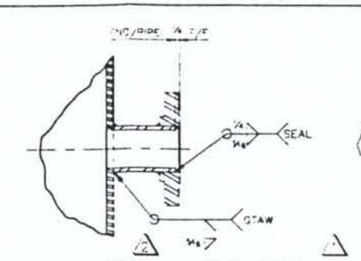

TYP CONNECTION WELD DETAIL
NO SCALE

NOTE:
NOTE 6 DOES NOT APPLY TO NEW NOZZLES PER REVISION 1

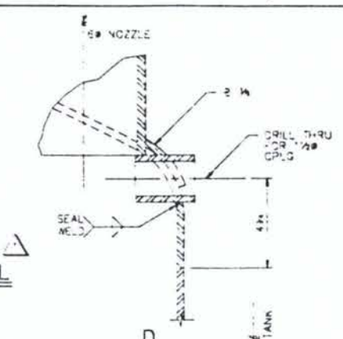

D
3" = 1'-0

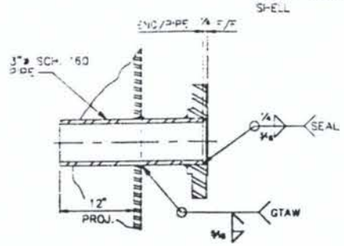

2 DETAIL 2
NO SCALE

NOTE:
NOTE 6 DOES NOT APPLY TO NEW NOZZLES

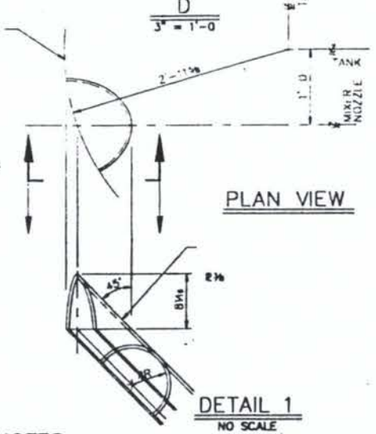

PLAN VIEW

DETAIL 1
NO SCALE

NOTES:

1. ALL WELDS & WELDING INSPECTION SHALL BE IN ACCORDANCE WITH ASME BOILER & PRESSURE VESSEL CODE SECTIONS 8 & 9.
2. TANK TO BE PRESSURE CHECKED FOR LEAKS AT 10 PSIG.
3. ALL STEEL TO BE ASTM A516 GR 70, WITH THE FOLLOWING EXCEPTIONS:
   STRL – TO BE ASTM A36 (NOTED M.S.)
   PIPE – TO BE ASTM A53 GR B TYPE E OR S.
   STANDARD FLANGES – TO BE ASTM A105 FORGED STL ANSI B16.5.
   COUPLINGS – TO BE 3000# FORGED STL ASTM A105 GR 2.
4. PAINT OUTSIDE SURFACES WITH 1 SHOP COAT SHERWIN-WILLIAMS KROMIX METAL PRIMER B50N2, 3 MILS DRY FILM THK. & 1 FINISH COAT SHERWIN-WILLIAMS ENAMEL B54-OSHA SAFETY YELLOW 2 MILS DRY FILM THICKNESS. SURFACE PREP. PER FMC SPECIFICATION ES-1-2-6.
5. ALL SLIP ON FLANGES TO BE WELDED BOTH SIDES
6. ALL NOZZLES AND PENETRATIONS SHALL BE SEAL WELDED ON INSIDE OF VESSEL.
7. FABRICATOR TO PROVIDE NAME PLATE STAMPED & ATTACHED ON VESSEL, WITH FABRICATORS NAME, DATE & PURCHASE ORDER NUMBER.
8. ALL FLUSH CONNECTIONS SHALL BE IN ACCORDANCE WITH THE "TYP CONNECTION WELD DETAIL".
9. FOR NOZZLE CONNECTIONS WITH INTERNAL PROJECTIONS – SEE DETAIL 2.
10. ALL WELDS FOR NEW CONNECTIONS WILL BE MADE USING THE GTAW PROCESS.
11. SHELL OPENINGS FOR NEW CONNECTIONS 3"ø AND SMALLER WILL BE DRILLED TO MATCH THE BORE OF THE CONNECTION. LARGER THAN 3"ø MAY BE FLAME CUT. CARE IS TO BE TAKEN TO INSURE CUT-OUTS DO NOT FALL INSIDE OF THE VESSEL.
12. FIELD TO CUT/REMOVE EXISTING 2"-150# RF S.O. FLG W/2" PIPE 1 3/4" FROM FACE OF 3" FLANGE. THEN WELD 3" TO 2"-150# RF W.N. REDUCING FLANGE TO EXISTING 2" PIPE.

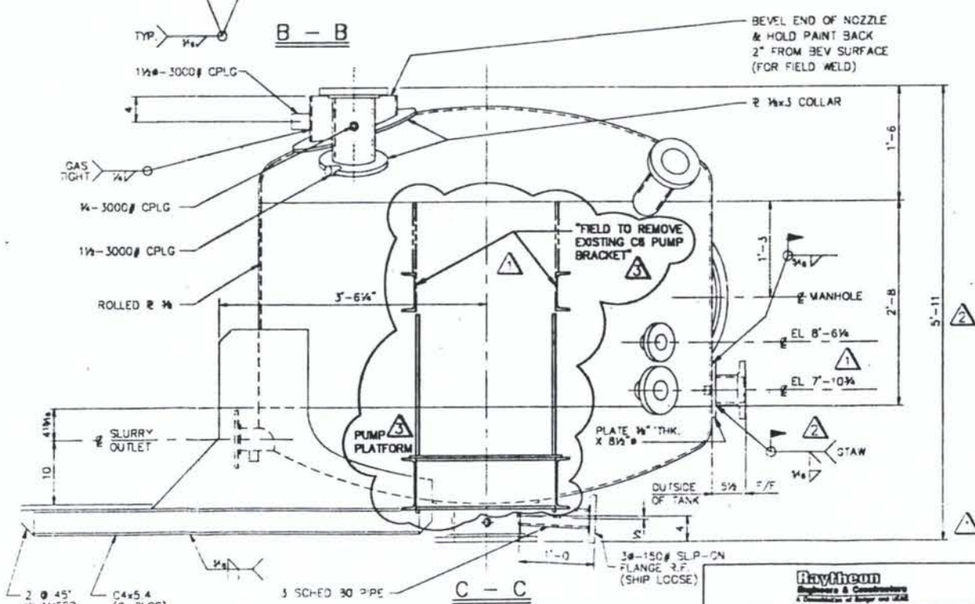

C – C

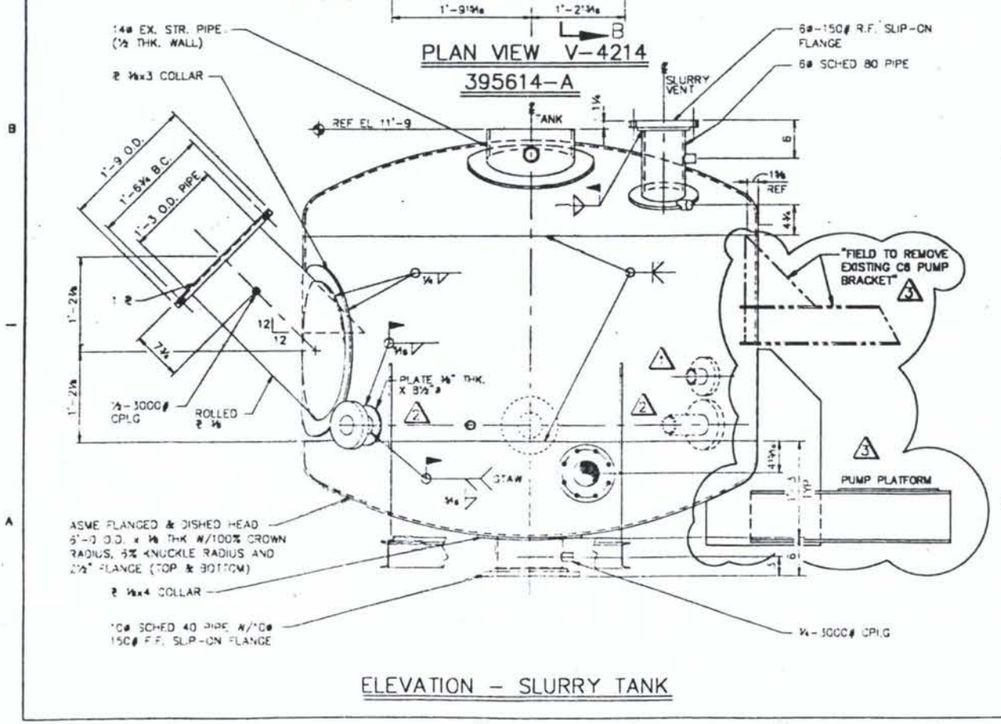

ELEVATION – SLURRY TANK

REV	ZONE	REVISIONS	DATE	BY	APPR.
3		ADDED PUMP SUPPORT		WSH	
2	ALL	NOZZLE REVISIONS FOR NOSAP PROJECT	10/24/94	PRM	
1	ALL	REVISED FOR NON-HAZARDOUS SLURRY ASSURANCE PILOT C94-08	02/15/94	SB	

REVISION APPROVAL RECORD					REV 4
DISCIPLINE	REVIEWED	DATE	DISCIPLINE	REVIEWED	DATE
CIVIL	—	—	PIPING	BJH	1/31/95
STRUCTURAL	PWB	1/30/95	ELECTRICAL	NJS	1/30/95
HVAC	—	—	ARCHITECTURAL	—	—
MECHANICAL	CTL	1/30/95	INST & CONTROL	RDT	1/30/95
PROCESS	JRS	1/31/95	ENVIRONMENTAL	—	—
NUCLEAR	—	—	GEN. ARRANG.	—	—

NOTE: THIS REVISION HAS BEEN PREPARED IN RELIANCE UPON THE ACCURACY AND ADEQUACY OF THE SUBJECT DRAWING WITHOUT INDEPENDENT REVIEW, ANALYSIS OR VERIFICATION BY RAYTHEON. RAYTHEON DISCLAIMS ANY LIABILITY BASED UPON OR RELATED TO THE ACCURACY OR ADEQUACY OF THE SUBJECT DRAWING OTHER THAN THE INFORMATION PRESENTED IN REVISION 3

PROFESSIONAL ENGINEER REGISTERED 7667 STATE OF IDAHO THOMAS LOTKOWSKI

BITHELL ENGINEERING INC.
BE 04134 | PLOT SCALE: 1 = 12

Raytheon Engineers & Constructors
A Consolidation of Badger and J&A

DRAWING STATUS				
STATUS	REV	DATE	SDE	PEM
APPROVED FOR CONSTRUCTION				
REVISED & APPROVED FOR CONSTRUCTION	3	1/30/95	CTL	CTL

NOT APPROVED FOR CONSTRUCTION UNLESS SIGNED & DATED. DESTROY ALL PRINTS BEARING EARLIER DATE &/OR REV. NO.

FMC — PHOSPHORUS CHEMICAL DIVISION
FMC CORPORATION
POCATELLO, IDAHO

REFERENCE DRAWINGS	
394948	ARR SLURRY TANK
394949	SLURRY TANK SUPT
394950	ARR SLURRY VENT
34940	ARR SLURRY PPG
397021	GEN. ARR. SLURRY TANKS

CHG. CBI – 02 SCALE 1"=1'-0 U.N.

DRAWN MLH 10/7/91
CHECKED DB 10/16/91
APPROVED AES 06/30/92
APPROVED AJP 06/30/92

PHOSPHORUS CHEMICAL DIVISION

DETAILS
2ND PASS SLURRY TANK
No. 4 FURNACE (WEST)
1992 REHAB
PHOSPHORUS DEPT.

DRAWING NO. 395614 REV. 3

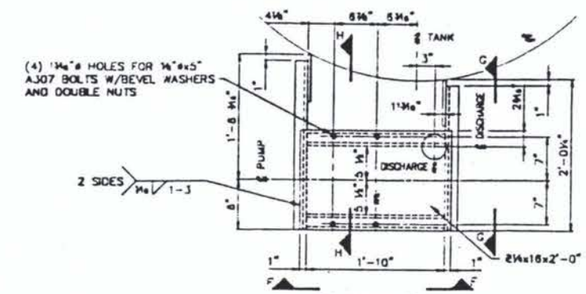

PLAN VIEW

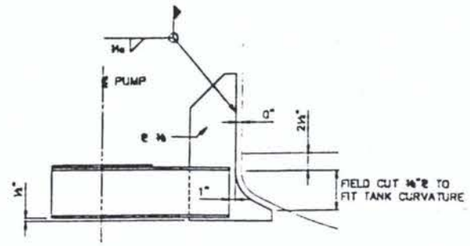

SECTION G (DIMENSIONS ARE TYPICAL IN BOTH SECTIONS)

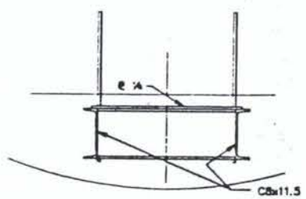

SECTION F

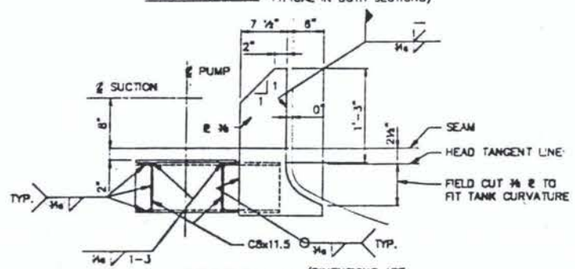

SECTION H (DIMENSIONS ARE TYPICAL IN BOTH SECTIONS)

V-3213 1ST PASS SLURRY TANK
NO. 3 FURNACE (WEST)
PUMP SUPPORT PLATFORM

(SEE DWG. NO. 394914 FOR TANK DWG.)
(SEE DWG. NO. 398264 FOR PIPING PLAN)

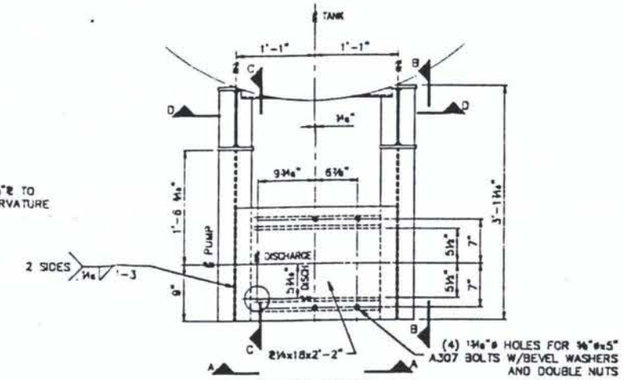

PLAN VIEW

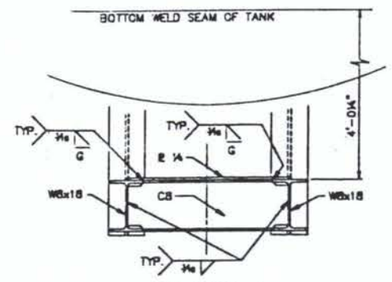

SECTION A

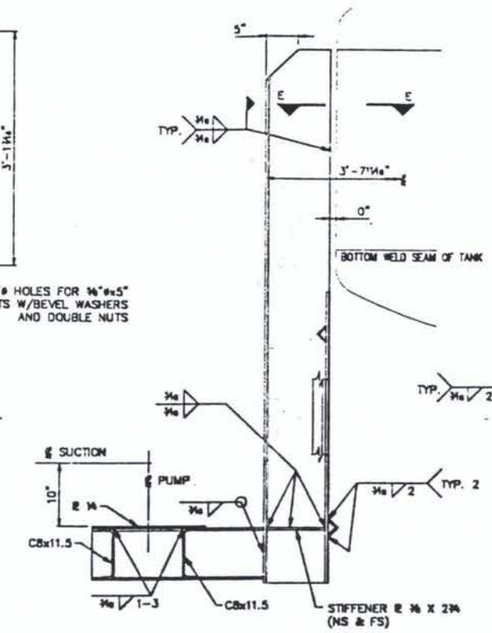

SECTION C (DIMENSIONS & WELDS ARE TYPICAL IN SECTIONS C & B)

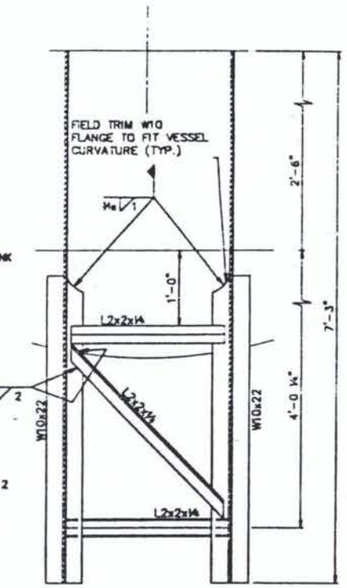

SECTION D

V-4213 1ST PASS SLURRY TANK
NO. 4 FURNACE (EAST)
PUMP SUPPORT PLATFORM

(SEE DWG. NO. 395613 FOR TANK DWG.)
(SEE DWG. NO. 398268 FOR PIPING PLAN)

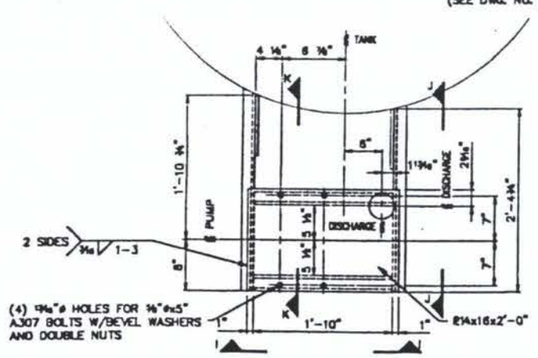

PLAN VIEW

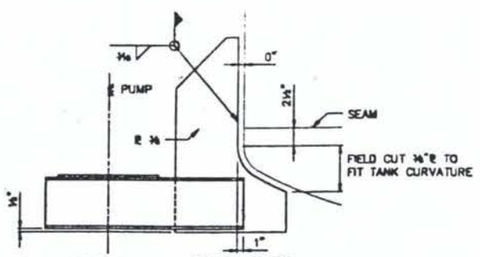

SECTION J (DIMENSIONS ARE TYPICAL IN BOTH SECTIONS)

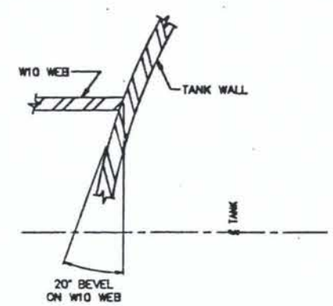

SECTION E

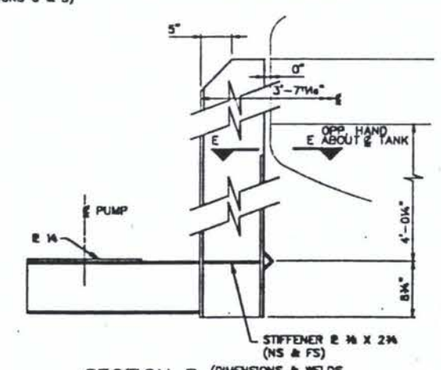

SECTION B (DIMENSIONS & WELDS ARE TYPICAL IN SECTIONS C & B)

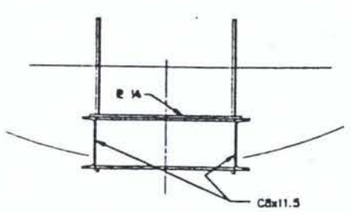

SECTION I

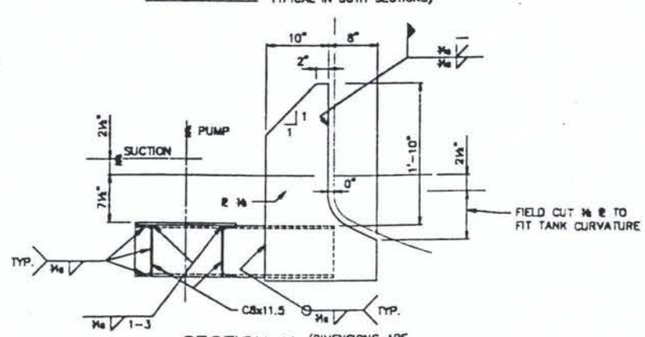

SECTION K (DIMENSIONS ARE TYPICAL IN BOTH SECTIONS)

V-4214 2ND PASS SLURRY TANK
NO. 4 FURNACE (WEST)
PUMP SUPPORT PLATFORM

(SEE DWG. NO. 395614 FOR TANK DWG.)
(SEE DWG. NO. 398266 FOR PIPING PLAN)

NOTES:

1. STRUCTURAL STEEL SHAPES AND PLATES SHALL CONFORM TO ASTM A-36
2. WELDING ELECTRODES SHALL BE E70XX PER AWS A5.1 OR A5.5.
3. STRUCTURAL STEEL SHALL BE SHOP PRIMED AND SHOP PAINTED WITH FIELD TOUCH-UP BY ERECTOR.

PROFESSIONAL ENGINEER REGISTERED 7667 STATE OF IDAHO THOMAS LOTKO III

REVISION APPROVAL RECORD				REV	
DISCIPLINE	REVIEWED	DATE	DISCIPLINE	REVIEWED	DATE
CIVIL	–	–	PIPING	BTH	1/31/95
STRUCTURAL	PWB	1/30/95	ELECTRICAL	–	–
HVAC	–	–	ARCHITECTURAL	–	–
MECHANICAL	CTL	1/30/95	INST & CONTROL	–	–
PROCESS	–	–	ENVIRONMENTAL	–	–
NUCLEAR	–	–	GEN. ARRANGE.	–	–

Raytheon Engineers & Constructors

DRAWING STATUS				
STATUS	REV	DATE	SDE	PEM
FOR CLIENT APPROVAL	A	1/30/95	CTL	CTL
APPROVED FOR CONSTRUCTION	0	7/21/95	CTL	CTL
REVISED & APPROVED FOR CONSTRUCTION				

NOT APPROVED FOR CONSTRUCTION UNLESS SIGNED & DATED. DESTROY ALL PRINTS BEARING EARLIER DATE &/OR REV. NO.

NO.	ZONE	REVISIONS	DATE	BY	APPD.

FMC PHOSPHORUS CHEMICAL DIVISION
FMC CORPORATION
POCATELLO, IDAHO

REFERENCE DRAWINGS	
394914	SLURRY TANK DETAILS
395614	SLURRY TANK DETAILS
395613	SLURRY TANK DETAILS

DETAILS
PRECIPITATOR SLURRY TANKS

PHOSPHORUS DEPT.

SCALE 1"=1'-0 U.N. DRAWN WGH 1/22/94

CHECKED
APPROVED
APPROVED

DRAWING NO. 398322 REV. 0

PHOSPHORUS CHEMICAL DIVISION

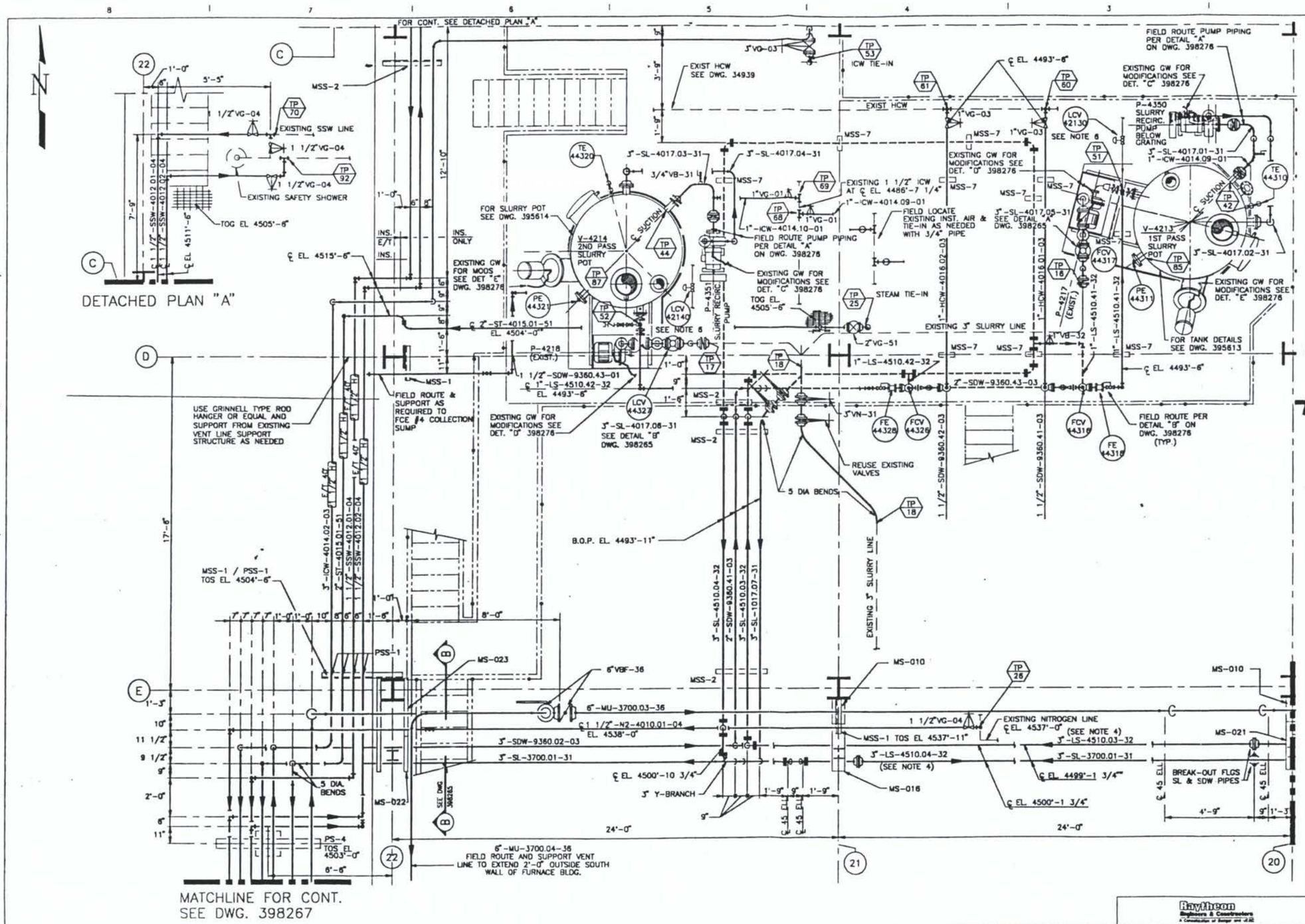

NOTES:

1. PIPE ELEVATIONS ARE BASED ON FURNACE FLOOR HIGH POINT EL 4481'-0" (0'-0").
2. FOR MSS PIPE SUPPORTS SEE DWG'S 398277 & 398278. FOR MS SUPPORTS SEE DWG 398310.
3. TP XX TYPICAL TIE-IN POINT SEE TIE-IN LIST.
4. INSTALL 2" & LARGER LS (LIME SLURRY) PIPE USING VICTAULIC TYPE FITTINGS OR EQUAL.
5. FIELD TO RECONNECT EXISTING STEAM PURGE PIPE.
6. EXISTING LOCATION OF LCV. RELOCATE AS SHOWN IN DETAIL "B" ON DWG. 398276. DEMO EXISTING HCW BACK TO HEADER AND PLUG.
7. COPE INSULATION AT SUPPORT POINTS AS NEEDED.

FIELD VERIFY DIMENSIONS / ROUTING SHOWN PRIOR TO FABRICATION.

PROFESSIONAL ENGINEER REGISTERED 7688 STATE OF IDAHO J. LARRY SMITH 8/4/95

MK	ZONE	REVISIONS	DATE	BY	APVD.
5		ADDED SLURRY POT PIPING	01/08/95	JCH	
4		REVISED SSW-4012.02 & SDW-9360.43	12/15/94	GJW	JCH
3		ADDED SSW & SDW PIPES, REV MS #'S	12/01/94	GJW	JCH
2		REV TIE-IN 70 & 26 DELETED NOTE 4	11/16/94	JCH	GJW
1		REVISED FOR HAZOP COMMENTS	10/27/94	JCH	JCH
0		APPROVED FOR CONSTRUCTION	10/10/94	BTH	CRP
P		PRELIMINARY	9/30/94	BTH	

Raytheon Engineers & Constructors

PHOSPHORUS CHEMICAL DIVISION
FMC CORPORATION
POCATELLO, IDAHO

REVISION APPROVAL RECORD				REV 5	
DISCIPLINE	REVIEWED	DATE	DISCIPLINE	REVIEWED	DATE
CIVIL	—	—	PIPING	BJH	1/18/95
STRUCTURAL	FJV	1-18-95	ELECTRICAL	NJS	1/18/95
HVAC	—	—	ARCHITECTURAL	—	—
MECHANICAL	CTL	1/18/95	INST & CONTROL	RDT	1/18/95
PROCESS	JRJ	1/19/95	ENVIRONMENTAL	—	—
NUCLEAR	—	—	GEN. ARRANG.	—	—

DRAWING STATUS				
STATUS	REV	DATE	SDE	PEM
APPROVED FOR CONSTRUCTION	0	10/11/94	BTH	CTL
REVISED & APPROVED FOR CONSTRUCTION	1	1/18/95	BJH	CTL

NOT APPROVED FOR CONSTRUCTION UNLESS SIGNED & DATED. DESTROY ALL PRINTS BEARING EARLIER DATE &/OR REV NO.

REFERENCE DRAWINGS	
398256	PIPING DRAWING INDEX
398245	P&ID
395613	1ST PASS POT
395614	2ND PASS POT
398315	STRUCT. STEEL CHANGES

CHG. C94-20 SCALE 3/8"=1'-0"

THIS PRINT AND ALL INFORMATION THEREON IS THE PROPERTY OF PHOSPHORUS CHEMICAL DIVISION. NOT TO BE USED, COPIED OR REPRODUCED IN WHOLE OR IN PART WITHOUT THE WRITTEN CONSENT OF PHOSPHORUS CHEMICAL DIVISION

PIPING PLAN
FURNACE #4
1ST/2ND PASS SLURRY POTS
NOSAP PROJECT
PHOSPHORUS DEPT.

DRAWN GJW
CHECKED CRP
APPROVED
APPROVED

DRAWING NO. 398266 REV 5

PLOT 1:1

REMC PROJ. NO. 9351.001

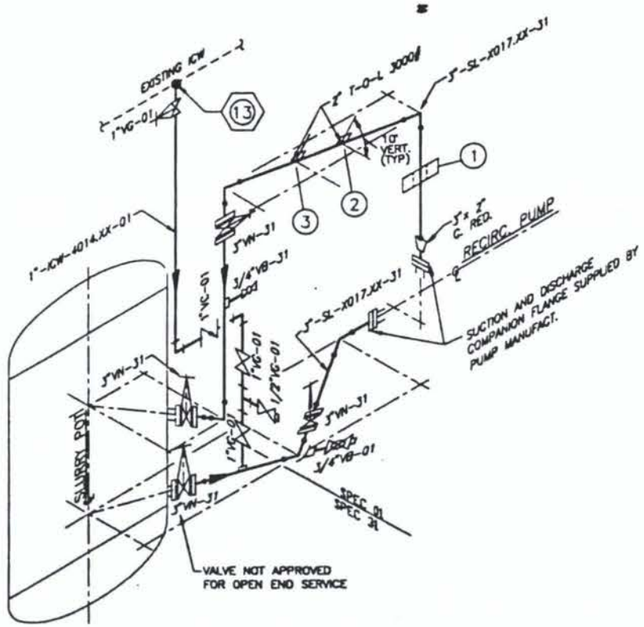

DETAIL – "A"
RECIRCULATION LOOP
TYPICAL FOR FCE #1, 2 & 3
SEE BELOW FOR FCE #4

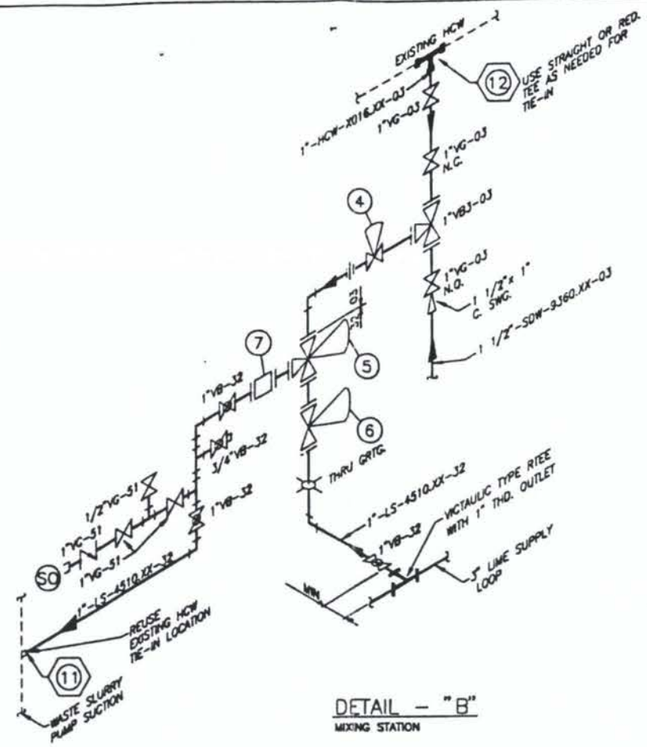

DETAIL – "B"
MIXING STATION

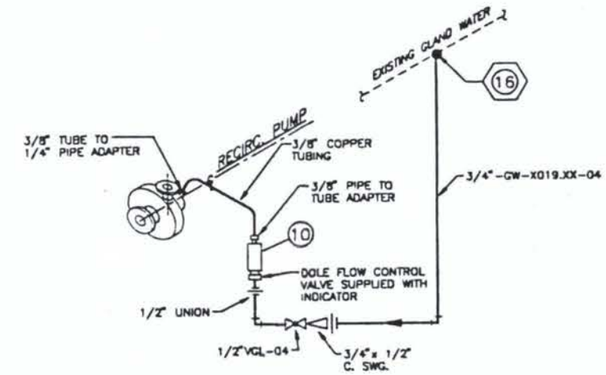

DETAIL – "C"
TYPICAL SEAL FLUSH
RECIRCULATION PUMP

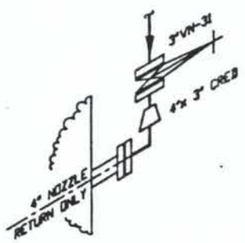

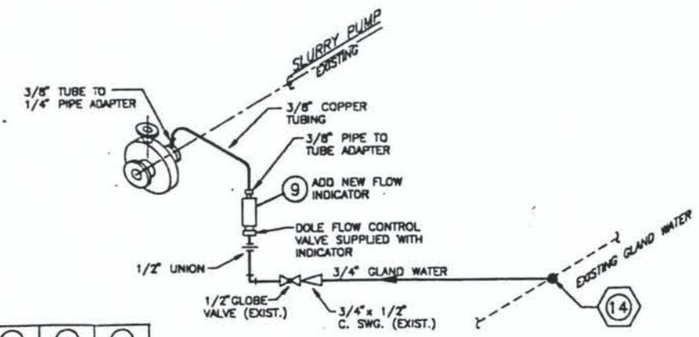

DETAIL – "D"
SLURRY PUMP
FLOW INDICATOR TIE-IN

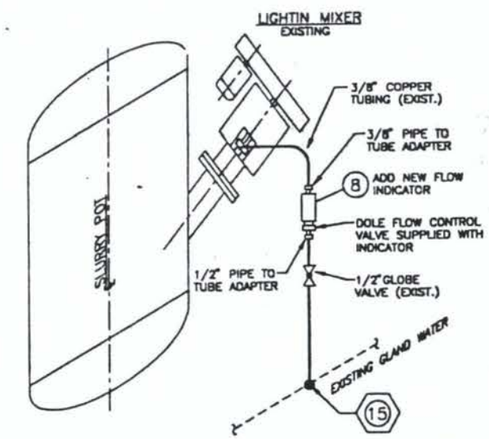

DETAIL – "E"
AGITATOR
FLOW INDICATOR TIE-IN

PROFESSIONAL ENGINEER REGISTERED 7688 STATE OF IDAHO LARRY SMITH 7-1-95

	ITEM #	1	2	3	4	5	6	7	8	9	10	11	12	13	14	15	16
FURNACE #1	1 ST PASS V-1213	DE 12133	AE 14313	AE 14312	LCV 12130 (EXISTING)	FCV 14316	FCV 14315	FE 14318	FI 12150	FI 12170	FI 13500	TP 45	TP 54	TP 62	TP 98	TP 97	TP 4
	2 ND PASS V-1214	DE 12143	AE 14323	AE 14322	LCV 12140 (EXISTING)	FCV 14326	FCV 14325	FE 14328	FI 12160	FI 12180	FI 13510	TP 46	TP 55	TP 63	TP 100	TP 99	TP 5
FURNACE #2	1 ST PASS V-2213	DE 22133	AE 24313	AE 24312	LCV 22130 (EXISTING)	FCV 24316	FCV #4315	FE 24318	FI 22150	FI 22170	FI 23500	TP 47	TP 56	TP 64	TP 102	TP 101	TP 9
	2 ND PASS V-2214	DE 22143	AE 24323	AE 24322	LCV 22140 (EXISTING)	FCV 24326	FCV #4325	FE 24328	FI 22160	FI 22180	FI 23510	TP 48	TP 57	TP 65	TP 104	TP 103	TP 10
FURNACE #3	1 ST PASS V-3213	DE 32133	AE 34313	AE 34312	LCV 32130 (EXISTING)	FCV 34316	FCV 34315	FE 34318	FI 32150	FI 32170	FI 33500	TP 49	TP 58	TP 66	TP 106	TP 105	TP 14
	2 ND PASS V-3214	DE 32143	AE 34323	AE 34322	LCV 32140 (EXISTING)	FCV 34326	FCV 34325	FE 34328	FI 32160	FI 32180	FI 33510	TP 50	TP 59	TP 67	TP 108	TP 107	TP 15
FURNACE #4	1 ST PASS V-4213	DE 42133	AE 44313	AE 44312	LCV 42130 (EXISTING)	FCV 44316	FCV 44315	FE 44318	FI 42150	FI 42170	FI 43500	TP 51	TP 60	TP 68	TP 96	TP 94	TP 19
	2 ND PASS V-4214	DE 42143	AE 44323	AE 44322	LCV 42140 (EXISTING)	FCV 44326	FCV 44325	FE 44328	FI 42160	FI 42180	FI 43510	TP 52	TP 61	TP 69	TP 95	TP 93	TP 20

REVISION APPROVAL RECORD				REV 0	
DISCIPLINE	REVIEWED	DATE	DISCIPLINE	REVIEWED	DATE
CIVIL	—	—	PIPING	BTH	1/5/95
STRUCTURAL	FJV	1-5-95	ELECTRICAL	NJS	1/5/95
HVAC	—	—	ARCHITECTURAL	—	—
MECHANICAL	CTL	1-5-95	INST & CONTROL	RDT	1/6/95
PROCESS	JRJ	1-5-95	ENVIRONMENTAL	—	—
NUCLEAR	—	—	GEN. ARRANG.	—	—

Raytheon Engineers & Constructors

DRAWING STATUS				
STATUS	REV	DATE	SDE	PEM
APPROVED FOR CONSTRUCTION	0	1/5/95	BTH	CTL
REVISED & APPROVED FOR CONSTRUCTION				

NOT APPROVED FOR CONSTRUCTION UNLESS SIGNED & DATED. DESTROY ALL PRINTS BEARING EARLIER DATE &/OR REV NO

REV	ZONE	REVISIONS	DATE	BY	APPD.
0		ISSUED APPROVED FOR CONSTRUCTION	01/06/95	GJW	
P		PRELIMINARY	9/30/94	BTH	

FMC PHOSPHORUS CHEMICAL DIVISION
FMC CORPORATION
POCATELLO, IDAHO

REFERENCE DRAWINGS
398256 PIPING DRAWING INDEX

PIPING
MISC. DETAILS & SECTIONS
FURNACE AREA
NOSAP PROJECT
PHOSPHORUS DEPT.

CHG. 094-20 SCALE NONE
DRAWN BTH
CHECKED JCH
APPROVED
APPROVED
PHOSPHORUS CHEMICAL DIVISION

DRAWING NO. 398276 REV 0

REAC PROJ NO. 9353.001