IDD 9518
10-1-99
FF38

FURNACE #3 WASTEWATER COLLECTION SUMP SYSTEM

V-3400

DESIGN ASSESSMENT AND CERTIFICATION

IN ACCORDANCE WITH

CODE OF FEDERAL REGULATIONS

TITLE 40

PART 265, SUBPART J

FMC CORPORATION
PHOSPHOROUS CHEMICAL DIVISION
POCATELLO, IDAHO
POINT OF GENERATION PROJECT

USEPA RCRA
3001102

FURNACE #3 WASTE WATER COLLECTION SUMP SYSTEM

V-3400

DESIGN ASSESSMENT AND CERTIFICATION

IN ACCORDANCE WITH
CODE OF FEDERAL REGULATIONS

TITLE 40
PART 265, SUBPART J

FMC CORPORATION
PHOSPHOROUS CHEMICAL DIVISION
POCATELLO, IDAHO
POINT OF GENERATION PROJECT

TABLE OF CONTENTS

	Page
1. SUMP SYSTEM DESCRIPTION	1
2. SUMP SYSTEM DESIGN ASSESSMENT (PARA. 265.192)	1
2.1 WASTE STREAM CHARACTERISTICS	1
2.1.1 Waste Stream Descriptions	
2.1.2 Waste Stream Effect on Materials of Construction	
2.2 WASTE WATER COLLECTION SUMP LINER	3
2.2.1 Construction Design	
2.2.2 Design Standards	
2.2.3 Structural Strength and Anchorage	
2.2.4 Overpressure/Overfill Control	
2.3 SUMP AUXILIARY EQUIPMENT	5
2.3.1 Sump Fume Fan	
2.3.2 Sump Pumping System	
2.4 SUMP FOUNDATION	5
2.4.1 Construction Design	
2.4.2 Design Standards	
2.4.3 Soil Bearing/Structural Strength	
2.4.4 Frost Effects	
2.5 SUMP ANCILLARY SYSTEMS	6
2.5.1 Ancillary Piping System	
2.6 INSTALLATION INSPECTION	7
3. CONTAINMENT AND DETECTION OF RELEASES (PARA. 265.193)	7
3.1 SECONDARY CONTAINMENT	7
3.2 SUMP PRIMARY LEAK DETECTION SYSTEM	7
3.3 PIPING & PUMPS LEAK DETECTION SYSTEM	7
3.3.1 Ancillary Piping System	
3.3.2 Auxiliary Pumping System	
4. GENERAL OPERATING REQUIREMENTS (PARA. 265.194)	8
4.1 CONTROL SYSTEM	8
4.1.1 Sump Controls	
5. CERTIFICATION OF DESIGN ASSESSMENT (PARA 270.11(D))	9

APPENDICES

APPENDIX 1 WASTE CHARACTERISTICS
MATERIAL SAFETY DATA SHEETS

APPENDIX 2 WASTE WATER COLLECTION SUMP LINER
SUMP LINER CALCULATIONS
SUMP LINER DESIGN DRAWINGS
SUMP MATERIAL OF CONSTRUCTION

APPENDIX 3 SUMP FOUNDATION
CONCRETE SPECIFICATIONS AND STANDARDS
CONCRETE FOUNDATION DRAWINGS
SUMP FOUNDATION ASSESSMENT
DAMES & MOORE, GEOTECHNICAL INVESTIGATION, Nov. 1994

APPENDIX 4 ANCILLARY PIPING SYSTEM
PIPING STANDARDS & SPECIFICATIONS
PIPING DRAWINGS
PIPING SUPPORTS

APPENDIX 5 AUXILIARY EQUIPMENT
SUMP PUMP INFORMATION & SPECIFICATIONS
FUME FAN INFORMATION & SPECIFICATIONS

APPENDIX 6 SUMP SYSTEM DRAWINGS
P&IDs

APPENDIX 7 INSTALLATION INSPECTION
CHECKLIST & SIGN OFF

DESIGN ASSESSMENT

1. SUMP SYSTEM DESCRIPTION

V-3400 is an existing concrete sump that has been modified to allow only wastewater flows to enter the containment area pan and sump. This modification to the original design provides a definitive process break between all waste streams and product streams in the furnace area. As a result, the sump provides temporary containment for wastewater from the Furnace #3 Medusa Scrubber, pump seal water, and wastewater from the Slurry Pots. A wash down system is incorporated into the sump design, however, this system is not operational and does not contribute wastewater to the sump. In conjunction to being a stand-alone system, the containment area pan of sump V-3400 also functions as the secondary containment for the Furnace #3 Slurry Pots. The modified V-3400 sump was placed in service during September 1999.

The sump and containment area pan are double lined with stainless steel and include manually operated interstitial leak detection systems. The containment area surrounds the sump and is curbed and sloped to funnel all liquids into the sump. The leak detection system for both the sump and for the surrounding containment area consists of a manually operated sealed dip tube, with dipstick, which accesses a low point in the interstitial space between the primary and secondary liners. The plant operators monitor for leakage on a regularly scheduled basis.

The sump is sized to contain 3400 gallons of liquid (nominal). The surrounding curbed containment area can contain an additional 4800 gallons of liquid prior to overflow. Three level indicators provide overfill protection in the sump. All fluid from this sump is pumped by either pump P-3401 or P-3402 through ancillary piping, to the V-3600 Wastewater Collection Tank System. Sump ventilation is provided by an offgas blower, F-3400, which collects and sends all fumes in the sump to the Furnace Scrubber System.

2. SUMP SYSTEM DESIGN ASSESSMENT (Para. 265.192)

2.1 WASTE STREAM CHARACTERISTICS

2.1.1 Waste Stream Descriptions.

The V-3400 Wastewater sump is a collection point for many different process waste streams. The streams vary in pH, temperature, and concentration of solids. A description of each stream characteristics is as follows:

- PWC – Phossy Water Cold, Pond 18B

PWC is clarified pond water recycled to the plant from pond 18B. The phosphorus bearing wastewater streams enter pond 18A where the solids are allowed to settle. The clarified water then overflows to pond 18B. PWC contains P_4 in concentrations at the solubility limit of P_4 in water (~ 3 ppm) and has a pH ranging from 6.5-8. The temperature of the PWC ranges from ~ 32° F in the winter to 80° F in the summer. This

water is used as pump seal fluid for the sump discharge pumps (P-3401 – P-3401). The pump seal flow rate is continuous at 5-10 gpm.

- Precipitator Slurry

The Precipitator Slurry is a mixture of furnace offgas solids and water (hot clarified phossy water, heated PWC or slurry decant water) produced in the Precipitator Slurry Pots. The slurry is normally alkaline with a pH ranging from 8-12. Abnormal furnace upsets result in major air leakage into the furnace offgas system, causing acid formation that can lower the pH of precipitator slurry to a pH of 4. Typically the precipitator slurry contains low concentrations of elemental phosphorus (0-2500 ppm), but can reach concentrations as high as 4 percent by weight if the slurry system is operated with hot clarified phossy water and problems with the clarifier occur. The Precipitator Slurry temperature ranges from 120- 160° F and has a solid concentration normally between 11 - 20 percent by weight. Precipitator slurry is not a normal process stream into V-3400. Typically slurry enters the sump during maintenance operations when the precipitator and slurry pots are washed down. It can also enter the sump if a slurry pot overflows into the containment area. The slurry can also be directly pumped to the Wastewater sump as a backup to the line going directly to the V-3600 Wastewater Collection Tank System.

- Medusa Scrubber Liquor

The Medusa Scrubbers collect tapping fumes from the slag and metal runner areas including acid fumes generated in the tapping process. The scrubber liquor has a pH from 4-6 with an operating temperature of 85° F. Suspended solids in the scrubber liquor are typically less than 0.5 percent by weight.

- Resulting Mixed Waste in Collection sump

The resulting composition of the mixed waste in the sump as defined by the streams described above will vary widely depending upon the flow conditions into the sump and the furnace operating conditions. Typically, wastewater will have a pH in the range of 5.5-7.5 with a suspended solids concentration of 0.5 percent by weight. For short durations, the mixed waste pH can range from 4 to 12 and suspended solids will peak at 20 percent by weight. The normal temperature of the mixed waste in the sump is 85° F, however, 205° F can be attained. The discharge line from the pumps can be purged with saturated steam at 100 psig.

2.1.2 Waste Stream Effect on Materials of Construction

All wetted areas of the sump and containment area are constructed of T316L stainless steel (SS). This material was selected on the compatibility requirement for the characteristics of the worst case stream contained by the sump. This material provides strength, durability, corrosion resistance, and longevity to the sump. See Appendix 2 for material of construction design requirements.

- PWC is transported in piping meeting the ES-2-1-0 material specification (Carbon Steel-Appendix 4). The clarified water pH is near neutral. There is the potential for scaling or rust formation due to the high total desolved solids of the fluid.

- Precipitator slurry is transported in pipe meeting the ES-2-31-0 piping specification (Carbon Steel-Appendix 4). In normal operating conditions, the slurry is alkaline and contains 11-20 percent solids by weight. During this condition, there is a possibility of scaling.

- Medusa scrubber liquor is transported in pipe meeting the ES-2-2-0 material specification (T316L Stainless Steel-Appendix 4). The scrubber liquor is acidic and slightly corrosive, stainless steel is utilized for corrosion resistance.

- Mixed waste is discharged via pumps P-3401 and P-3402. All the discharge piping meets the ES-2-2-0 material specification (T-316L Stainless Steel-Appendix 4).

2.2 WASTE WATER COLLECTION SUMP

2.2.1 Construction Design

The V-3400 Wastewater Collection sump is a concrete sump that is lined with primary and secondary liners constructed of T316L SS diamond plate as a corrosion-protection measure. The dimension of the interstitial space between the primary liner and secondary liner will be controlled by the bottom of the primary liner plate setting upon the diamond pattern of the secondary liner plate. This diamond pattern also provides continuous support for the primary liner plate, which is subjected to a hydrostatic liquid head. Hydrostatic head varies depending upon the depth of the liquid in the sump.

The curbed containment area surrounding the sump, and the inside vertical surfaces of the curb around the containment area are also double lined with T316L SS diamond plate. The top of the liner is attached to the curb with a flouroplastic/glass expansion joint, which will flex and thus allow for movement of the liner due to thermal expansion and contraction. The bottom surfaces of the existing concrete sump were cleaned and then surfaced with a layer of grout. The grout will be used to establish the slope of the bottom surfaces of the sump and of the surrounding containment area and provides uniform support and the correct slope for liner plates.

2.2.2 Design Standards

Since the Primary and Secondary liner plates are continuously in contact and supported by the concrete foundation they are considered a component of the sump system. Therefore, no design calculations in regards to the structural strength for the support of the sump liner are required, only calculations of the stress effects on the liner due to thermal changes. See Section 2.4 for discussion of the sump foundation design and construction.

The stress analysis of the thermal effects on the liner plates was performed using a finite element analysis. ANSYS Version 5.3 computer program was used for the analysis. The design of the liner plates as applied over the inside surfaces of the containment area is based upon reducing the thermal stresses and deflections in all liner plates to acceptable levels.

2.2.3 Structural Strength and Anchorage

Based upon the results of the thermal analysis as described in Paragraph 2.2.2 above, the liner plates are cradled by the foundation, and are allowed to flex with changes to the thermal environment of the contained material. The vertical sidewalls of the surrounding containment area curbs are designed with an expansion joint to relieve the thermal stresses caused by the thermal expansion and contraction of the liner plates.

2.2.4 Overpressure / Overfill Control

Overpressure

- The sump is not subject to any possible overpressure scenarios for the following reasons:

    - The perimeter of the sump lid is open grating, to the building interior, and any fumes which develop are collected and sent to the furnace scrubber system with the F-3400 Vent Fan.

    - The sump operates at normal atmospheric pressure. The only pressure applied to the sump plates is a hydrostatic pressure due to the liquid head acting on the bottom and side plates, which are fully supported by the concrete foundation.

Overfill

- Redundant level elements LE-34001, LE-34002, and LE-34003 have been installed into the sump. These level instruments control the pumps through the Furnace #3 Honeywell Distributed Control System (TDC 3000). The sump Pumps pump liquid to the V-3600 Tank System. The Pumps are started and stopped automatically depending upon the level of the liquid in the sump. All flow into the sump is shut off upon the sensing of a "High-High Liquid Level", which closes the solenoid operated shutoff valves located in the liquid inlet piping.

2.3 SUMP AUXILIARY EQUIPMENT

2.3.1 Sump Fume Fan

The sump is equipped with a 20 HP, 2500 CFM off-gas blower mounted in the 8" duct line on the sump. The blower draws all the fumes from the sump and discharges them to the Furnace Scrubber System. See Appendix 5 for fan information.

2.3.2 Sump Pumping System

2.3.2.1 Materials of Construction
The sump pumps, P-3401 and P-3402, are vertical cantilever pumps constructed of 28% chrome for the wetted parts. The shaft is constructed of stainless steel. See Appendix 5 for pump information.

2.3.2.2 Design Standards
The sump pump is designed to pump 250 gpm at 80 ft of head using a 25 HP motor.

2.3.2.3 Installation Details
Pumps P-3401 and P-3402 are located in a South/North relationship with respect to each other. The pumps are mounted within sump V-3400 and are situated at the low point of the overall sump.

2.4 SUMP FOUNDATION

Since the plant's initial design of 1948, several upgrades where implemented within the area of the current V-3400 sump area. These upgrades were either constructed on top of the existing concrete or required removal and replacement of this concrete. The current design has redefined the containment plan. As a result, the redefined area required the installation of a new containment boundary wall and backfill of some of the previous slurry tank containment area.

2.4.1 Construction Design

For the existing foundation design and previous upgrades, the materials of construction consisted of a reinforced concrete. For this modification, the existing concrete, was first removed, then the exposed matting surfaces were roughened, cleaned, and a bonding agent was applied before placement of the new concrete. Twelve to eighteen inch lengths of existing steel reinforcing were left intact, the existing subgrade under the slab consists of minus 3/8" crushed slag fill and compacted in maximum 6" lifts. The concrete's compressive strength is 3000 psi at 28 days.

For the current containment area, the existing slab-on-grade and portions of the existing containment walls were reused. The new areas were bonded to the existing concrete after all laitance, unsound concrete, oil, grease stains, paint and other contaminants were removed. The surface was roughened to expose a solid aggregate surface with at least a 1/8" profile prior to application of the bonding agent. The concrete compressive strength is 3000 psi at 28 days. Drawings in Appendix 3 depict the area of the current containment and sump.

2.4.2 Design Standards

Proportioning, mixing, and placing of concrete was conducted in accordance with ACI 318 and Project Specification B05.00T (Appendix 3).

2.4.3 Soil Bearing/Structural Strength

The sump is integrated into the overall furnace building foundation therefore not making it prone to dislodgment. The original foundation and subsequent upgrades used crushed slag fill of minus 3/8" material which has been compacted in 6" lifts, maximum, as a subgrade. Since the foundation's initial installation, the area has not been adversely subjected to the effects of ground water, seismic conditions or nearby vehicular traffic.

An independent assessment of the existing sump was conducted to analyze the adequacy and water tightness of the sump. The results proved the sump to be adequate and qualified to handle the present loading conditions. The details of this calculation are in Appendix 3.

2.4.4 Frost Effects

Non-frost susceptible granular slag is used as a subgrade material fill. This material is not subject to frost heaving. The formulation of this subgrade material is identified in the Dames & Moore Geothechnical Report Appendix 3).

In addition, the sump is located within the furnace building which provides protection from the elements. Therefore its strength is not jeopardized by extremes in temperatures, excessive moisture, ultra-violet radiation, high winds, etc.

2.5 SUMP ANCILLARY SYSTEMS

2.5.1 Ancillary Piping System

2.5.1.1 Materials of Construction
See Section 2.1.2 and Appendix 4 for Piping Material Standards. The piping is specified per ASTM specifications.

2.5.1.2 Design Standards
The piping is designed in accordance with ASME/ANSI B31.3 Process Piping formally Chemical Plant and Petroleum Refinery Piping. All process streams associated with the V-3400 sump are considered category "General" fluid service. Pipe schedules, which are consistent with FMC Engineering Standards developed for each service, were used for the selected pipe. See Appendix 4 for the piping materials standards. Leak testing of the piping components is required. Testing shall be in accordance with ASME/ANSI B31.3, Section 345.7.

2.5.1.3 Pipe Supports
Appendix 4 contains the standard pipe support designs that were used to properly support and protect the ancillary piping systems against physical damage and excessive stress.

2.5.1.4 Insulation

Piping systems which require insulation are identified on the P&IDs. Insulation was installed in accordance with specification PP-2003. See Appendix 4.

2.6 INSTALLATION INSPECTION

An installation inspection was conducted to insure the sump against weld breaks, punctures, cracks, damage to protective coatings, corrosion and other structural damage or inadequate construction. Appendix 7 provides the inspection checklist and sign-off.

3. CONTAINMENT AND DETECTION OF RELEASES (Para. 265.193)

3.1 SECONDARY CONTAINMENT

A stainless steel liner between the concrete sump and the primary stainless steel layer, is installed to insure that the sump contents do not leak out onto the concrete, provides the sump secondary containment.

In addition, a lined, curbed containment area surrounding the sump is used to contain any overflow to prevent contamination and migration into the surrounding soil, ground water or surface water.

3.2 SUMP PRIMARY LEAK DETECTION SYSTEM

The primary leak detection system for the sump and surrounding containment area is a visual detection system based upon performing daily inspections of the interstitial space between the primary and secondary liners. The inspections will be made, with, a dipstick, at the fixed position dip tube sampling points located in the liner. Any liquid that leaks from the primary liner, drains and collects at these sample points.

3.3 PIPING & PUMPS PRIMARY LEAK DETECTION SYSTEM

3.3.1 Ancillary Piping System

All piping located within the sump containment area uses flanges and flanged valves. This piping is elevated above the ground and is visually inspected for leaks on a daily basis.

The piping located outside of the V-3400 sump System containment area, has welded joints, is elevated above the ground, and are visually inspected for leaks on a daily basis.

3.3.2 Auxiliary Pump System

The Pumps are mounted on the sump lid and are visually inspected daily for leakage.

4. GENERAL OPERATING REQUIREMENTS (Para.265.194)

4.1 CONTROL SYSTEM

4.1.1 Sump Controls

4.1.1.1 Feed System Description / Overfill Protection

The majority of the liquid streams flowing into the sump are not continuous. For example, the Slurry Pot Wastewater flows occur mainly when the equipment is manually washed down by personnel. In addition, the sump can collect Precipitator Slurry during maintenance operations or during furnace upset conditions. The only continuous process streams into the sump are from the Furnace #3 Medusa Scrubber, and from the PWC sprays. These continuous streams are equipped with solenoid cutoff valves, LV-34003 A/B/ & C, which will close if a High-High Liquid Level is reached. The valves will remain closed until the liquid level returns to normal through operation of the Pumps.

4.1.1.2 sump Level Control and Pump Control System

The liquid level in the Wastewater Collection sump is controlled by redundant level transmitters LT-34001 and LT-34003 that are mounted and located in the top of the sump. The two level transmitters are monitored by the DCS. One transmitter is designated as the primary, and the other is designated the secondary. The primary and secondary transmitters are constantly compared to assure that they agree within a distance of two inches. If they disagree, the operator is automatically alarmed. The operator then has the option to change control of the level over from the primary to the secondary transmitter. The decision to change should be based upon a visual verification and inspection. The system will remain alarmed until the two transmitters are back in agreement.

Liquid is removed from the sump by the operation of two Pumps, P-3401 and P-3402. ON/OFF control of the pumps is automatic and controlled through the DCS. The Pumps are turned on if a High-High Liquid Level is detected by LT-34001 or LT-34003 and will shut down on Low-Low Liquid Level. If a High Liquid Level is detected by LSH-34002 or if a High-High Liquid Level is detected by LT-34001 or LT-34003, the solenoid controlled cutoff valves LV-34003 A/B/C will close and shut off fluid flow into the sump.

Upon closing the LV solenoid operated cutoff valves, the DCS then disables the dump valves mounted at the Medusa Scrubber. This delays the shut down of the Medusa scrubber if a high level of liquid in the sump is remediated.

5. CERTIFICATION OF DESIGN ASSESSMENT (PARA 270.11(D))

Certification for Tank System: V-3400 (as described herein)

I certify under penalty of law that this document was prepared, and all attachments were gathered and examined under my direction or supervision in accordance with a system designed to assure that qualified personnel properly gather and evaluate the information submitted. Based on my inquiry of the person or persons who manage the system, or those persons directly responsible for gathering the information, the information submitted is, to the best of my knowledge and belief, true, accurate, and complete. I am aware that there are significant penalties for submitting false information, including the possibility of fine and imprisonment for knowing violations.

Signature: _____ Date: 9/20/99
Peter Critikos, P.E.

Title: Sr. Mechanical Engineer

P.E. Registration No.: 9446

Seal:

Raytheon Engineers & Constructors, Inc.
5555 Greenwood Plaza Blvd., Suite 100
Englewood, CO 80111

APPENDICES

APPENDIX 1 WASTE CHARACTERISTICS
MATERIAL SAFETY DATA SHEETS

APPENDIX 2 WASTE WATER COLLECTION SUMP LINER
SUMP LINER CALCULATIONS
SUMP LINER DESIGN DRAWINGS
SUMP MATERIAL OF CONSTRUCTION

APPENDIX 3 SUMP FOUNDATION
CONCRETE SPECIFICATIONS AND STANDARDS
CONCRETE FOUNDATION DRAWINGS
SUMP FOUNDATION ASSESSMENT
DAMES & MOORE, GEOTECHNICAL INVESTIGATION

APPENDIX 4 ANCILLARY PIPING SYSTEM
PIPING STANDARDS & SPECIFICATIONS
PIPING DRAWINGS
PIPING SUPPORTS

APPENDIX 5 AUXILIARY EQUIPMENT
SUMP PUMP INFORMATION & SPECIFICATIONS
FUME FAN INFORMATION & SPECIFICATIONS

APPENDIX 6 SUMP SYSTEM DRAWINGS
P&IDs

APPENDIX 7 INSTALLATION INSPECTION
CHECKLIST & SIGN OFF

APPENDIX 1
WASTE CHARACTERISTICS

APPENDIX 1 WASTE CHARACTERISTICS

MATERIAL SAFETY DATA SHEETS

Phosphorous, Elemental

FMC Phosphorus Chemicals Division
Pocatello

Interoffice

To Route List

Date September 19, 1989

From W. H. Lee

cc Supervisor
Engineers

Subject PROPER DESIGNATION FOR PHOSPHORUS ANALYSES

Recently, in the laboratory, we have received some rather confusing requests for phosphorus analyses. To help us serve you better, I will attempt to explain the various designations.

P_4 is solid, liquid, or gaseous white elemental phosphorus at temperatures below 800°C. Therefore, a request for % elemental P_4 or % total P_4 means the same as % P_4 or % white P_4 and the reported analytical value would be percent white elemental phosphorus. I would suggest using the designation % P_4.

P is the chemical symbol for phosphorus. A request for %P would result in a report of percent total phosphorus calculated as %P. It does not mean percent white phosphorus.

P_2O_5 is the chemical formula for the most abundant product of the chemical reaction between white phosphorus and oxygen. Because of convention, the designation $\%P_2O_5$ means percent total phosphorus calculated as % P_2O_5. It does not represent the percent phosphorus present as P_2O_5.

PO_4^{-3} is the ortho-phosphate ion, which is the most common naturally occurring form of phosphorus. Again, because of convention, a request for $\%PO_4$ or % total PO_4 would result in the percent total phosphorus calculated as $\%PO_4$. However, $\%o\text{-}PO_4$ or % ortho PO_4 means the percent phosphorus that is present as the ortho-phosphate ion.

Finally, red P means red elemental phosphorus, a very stable form of elemental phosphorus used in making matches. Should you request an analysis of % Red P, we will throw our hands up in the air and say, "We will guess with you!"

nm

W. Lee

MATERIAL SAFETY DATA 7723 14 0

PHOSPHORUS, ELEMENTAL

NFPA Designation 704

DEGREE OF HAZARD

4 = EXTREME
3 = HIGH
2 = MODERATE
1 = SLIGHT
0 = INSIGNFICANT

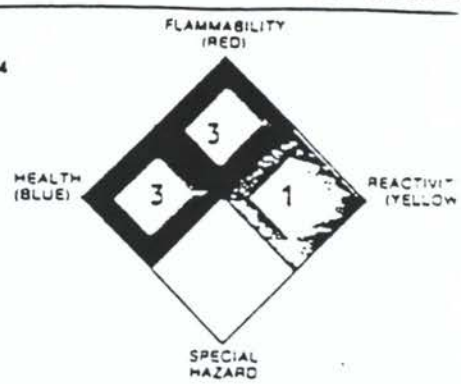

EMERGENCY TELEPHONES:
PLANT: (208) 236-8200 POCATELLO, ID
CHEMTREC: (800) 424-9300 TRANSPORTATION
MEDICAL: (303) 595-9048 ROCKY MTN

REVISION: EFFECTIVE: 10/17/85 PRINTED: 04/29/88

PREPARED FOR USE BY..... ELTON HEWITT

IDENTIFICATION

INFORMATION PROVIDED BY..: FMC CORPORATION
2000 MARKET STREET
PHILADELPHIA PA 19103

PRODUCT INFORMATION

SYNONYMS.....: WHITE PHOSPHORUS, YELLOW PHOSPHORUS
SHIPPING NAME - DOT.....: PHOSPHORUS, WHITE OR YELLOW, IN WATER
IATA.....: PHOSPHORUS, WHITE OR YELLOW, IN WATER
IMCO.....: PHOSPHORUS, WHITE OR YELLOW, IN WATER
FORMULA.....: P4
CHEMICAL FAMILY.....: PHOSPHORUS

PRECAUTIONARY INFORMATION

PRECAUTIONARY STATEMENT..:
(PLEASE USE THIS STATEMENT TO SATISFY THE IN-PLANT LABELING REQUIREMENTS OF THE OSHA HAZARD COMMUNICATIONS STANDARD 29CFR 1910.1200)

HEALTH:
CONTACT WITH SOLID OR LIQUID PHOSPHORUS CAUSES SEVERE BURNS OF SKIN AND EYES.
INHALATION OF SINGLE EXCEEDINGLY HIGH LEVELS OF VAPOR PRODUCES SEVERE LUNG IRRITATION FOLLOWED BY BUILD-UP OF FLUIDS IN LUNG.
CONTINUOUS LONG TERM INHALATION (>0.1 MG/CU. M) WILL RESULT IN CHANGES IN THE JAWBONE STRUCTURE RESULTING IN LOOSENING OF TEETH AND SEVERE PAIN AND SWELLING OF THE JAW.

PHYSICAL:
VAPOR OR LIQUID WILL IMMEDIATELY IGNITE IN AIR.
VERY REACTIVE WITH OXIDIZERS.

MATERIAL SAFETY DATA 7723 14 0

PHOSPHORUS, ELEMENTAL

NFPA Designation 704

DEGREE OF HAZARD

4 = EXTREME
3 = HIGH
2 = MODERATE
1 = SLIGHT
0 = INSIGNFICANT

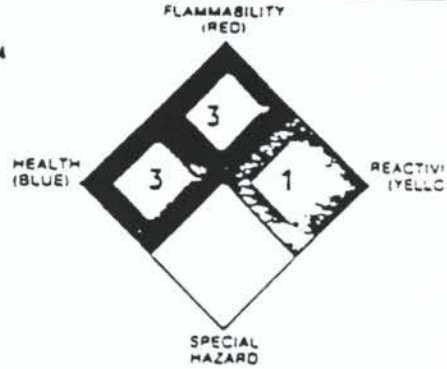

EMERGENCY TELEPHONES:
PLANT: (208) 236-8200 POCATELLO, ID
CHEMTREC: (800) 424-9300 TRANSPORTATION
MEDICAL: (303) 595-9048 ROCKY MTN

REVISION: EFFECTIVE: 10/17/85 PRINTED: 04/29/88

INGREDIENTS

CAS# AND COMPONENT.....: MATERIAL OR COMPONENT: ELEMENTAL PHOSPHORUS WHITE OR YELLOW

PERCENT : 99.9
CAS# : 7723-14-0
HAZARD CLASS : FLAMMABLE
PYROPHORIC
TOXIC

PHYSICAL DATA

MELTING POINT.....:	44.1C
BOILING POINT.....:	280C
VAPOR PRESSURE.....:	1MM @ 76.6C
VAPOR DENSITY (AIR - 1)..:	4.42
ROOM TEMPERATURE APPEARANCE AND STATE:	CUBIC CRYSTALS, COLORLESS OR YELLOW TO BLACK WAX-LIKE SOLID
ODOR.....:	SHARP, PUNGENT
SPECIFIC GRAVITY (H2O =1):	1.82 @ 20C
SOLUBILITY IN H2O % BY WT:	0.0003 @ 20C
% VOLATILES BY VOLUME....:	NOT AVAILABLE
EVAPORATION RATE (BUTYL ACETATE = 1).:	NOT AVAILABLE
PH (AS IS).....:	NOT APPLICABLE
PH (1% SOLUTION).....:	NOT APPLICABLE

FIRE, EXPLOSION AND REACTIVITY DATA

FLASH POINT.....:	IGNITES SPONTANEOUSLY IN AIR
AUTOIGNITION TEMPERATURE.:	86F (30C)
FLAMMABLE LIMITS UPPER..:	NOT KNOWN
(AIR) LOWER..:	APPROX. 3PPM BY VOL
EXTINGUISHING MEDIA.....:	WATER, WATER FOG, FOAM, DIRT, SAND
SPECIAL FIREFIGHTING.....: PROCEDURES	DELUGE WITH WATER, TAKING CARE NOT TO SCATTER, UNTIL FIRE IS EXTINGUISHED AND PHOSPHORUS HAS SOLIDIFIED, THEN COVER WITH WET SAND OR DIRT.

MATERIAL SAFETY DATA 7723 14 0

NFPA Designation 704

PHOSPHORUS, ELEMENTAL

DEGREE OF HAZARD
4 = EXTREME
3 = HIGH
2 = MODERATE
1 = SLIGHT
0 = INSIGNFICANT

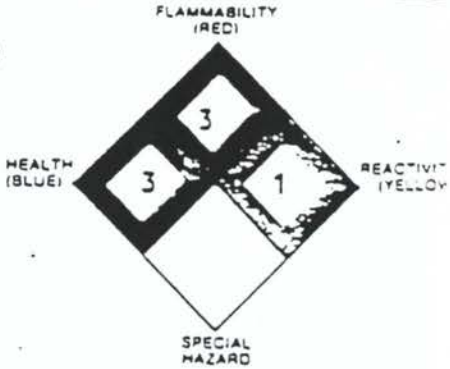

EMERGENCY TELEPHONES:
PLANT: (208) 236-8200 POCATELLO, ID
CHEMTREC: (800) 424-9300 TRANSPORTATION
MEDICAL: (303) 595-9048 ROCKY MTN

REVISION: EFFECTIVE: 10/17/85 PRINTED: 04/29/88

FIRE, EXPLOSION AND REACTIVITY DATA

DEGREE OF FIRE AND EXPLOSION HAZARD	DANGEROUS WHEN EXPOSED TO HEAT OR BY CHEMICAL REACTION WITH OXIDIZERS. IGNITES SPONTANEOUSLY IN AIR. VERY REACTIVE.
STABILITY	STABLE
HAZARDOUS POLYMERIZATION	WILL NOT OCCUR
CONDITIONS TO AVOID	AVOID CONTACT WITH AIR, OXIDIZING MATERIALS.
MAJOR CONTAMINANTS THAT CONTRIBUTE TO INSTABILITY	NONE
INCOMPATIBILITY	AIR, OXIDIZING MATERIALS, ALKALINE HYDROXIDES, HALOGENS AND NITRATES.
HAZARDOUS DECOMPOSITION PRODUCTS	EMITS HIGHLY TOXIC FUMES OF POX. PHOSPHINE, A FLAMMABLE, TOXIC GAS, CAN BE GENERATED WHEN PHOSPHORUS CONTACTS OXIDIZING AGENTS OR WHEN THE PHOSPHORUS WATER COVER IS ALLOWED TO REACH A PH OVER 6.5 AT A TEMP. OF 85C. A PHOSPHINE POLYMER CAN ALSO EXIST IN PHOSPHORUS SO PHOSPHINE MAY ALWAYS BE PRESENT.

ROUTES OF EXPOSURE

EYE CONTACT	SEVERE OCULAR DAMAGE MAY RESULT SOURCE: SAX DATE 1979
SKIN CONTACT	CAUSES SEVERE AND PAINFUL BURNS SOURCE: PATTY DATE: 1981 SOURCE: DANGEROUS PROPERTIES OF INDUSTRIAL MATERIALS - SAX DATE: 1979
SKIN ABSORPTION	MODERATELY HAZARDOUS LD50 (RAT) = 100 MG/KG SOURCE: SAX DATE: 1979
INHALATION	THRESHOLD LIMIT VALUE: AIR 0.1 MG/CU. M SOURCE: ACGIH DATE: 1984 OSHA STANDARD, AIR TWA 0.1 MG/CU. M SOURCE: NIOSH DATE: 1980 HIGHLY TOXIC (LC50 <2MG/L)
INGESTION	EXTREMELY HAZARDOUS LDLO (HUMAN) = 1.4 MG/KG SOURCE: NTIS DOCUMENT AD 778-725 DATE: 1974

PHOSPHORUS, ELEMENTAL

NFPA Designation 704

DEGREE OF HAZARD
4 = EXTREME
3 = HIGH
2 = MODERATE
1 = SLIGHT
0 = INSIGNFICANT

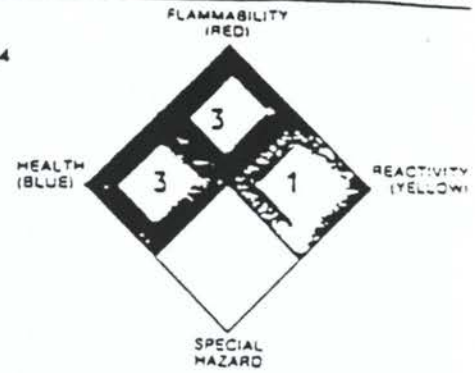

EMERGENCY TELEPHONES:
PLANT: (208) 236-8200 POCATELLO, ID
CHEMTREC: (800) 424-9300 TRANSPORTATION
MEDICAL: (303) 595-9048 ROCKY MTN

REVISION: EFFECTIVE: 10/17/85 PRINTED: 04/29/88

EFFECTS OF OVEREXPOSURE

ACUTE EXPOSURE.....: SOLID OR LIQUID CAUSES SEVERE BURNS OF SKIN. IF INGESTED CAUSES NAUSEA, VOMITING, JAUNDICE, LOW BLOOD PRESSURE, DEPRESSION, DELIRIUM, COMA, DEATH. SYMPTOMS AFTER INGESTION OR INHALATION MAY BE DELAYED FOR FROM A FEW HOURS TO 3 DAYS. A CHARACTERISTIC GARLIC ODOR MAY BE PRESENT ON BREATH OR VOMITUS.

CHRONIC EXPOSURE.....: A FORM OF GENERALIZED WEAKNESS, ACCOMPANIED BY ANEMIA, LOSS OF APPETITE, GASTROINTESTINAL COMPLAINTS, CHRONIC COLGH AND PALLOR HAS BEEN REPORTED TO BE DUE TO SYSTEMIC PHOSPHORUS POISONING. THE MOST COMMON FORM OF CHRONIC POISONING ALSO CAUSES CHANGES IN THE LONG BONES. SERIOUSLY AFFECTED BONES MAY BECOME BRITTLE, LEADING TO SPONTANEOUS FRACTURES. INDUSTRIALLY, NECROSIS OF THE BONE IS SEEN ONLY IN THE JAWBONES. IN SUCH CASES, THE FIRST SYMPTOMS ARE USLALLY TOOTHACHE AND EXCESSIVE SALIVATION, FOLLOWED BY THE LOOSENING OF ONE OR MORE TEETH AND SEVERE PAIN AND SWELLING OF THE JAW. A SUPPURATIVE ULCERATION DEVELOPS IN THE GUMS AROUND THE TOOTH OR TOOTH SOCKET WHICH MAY INVADE THE BONE ITSELF. THERE IS A GRADUAL PROGRESSION OF THE PROCESS UNTIL MOST OF THE AFFECTED BONE IS INVOLVED. IN EXTREME CASES SEVERE FACIAL DEFORMITY MAY RESULT.

EMERGENCY AND FIRST AID PROCEDURES

EYES.....: WASH EYES COPIOUSLY WITH WATER AT LEAST 15 MINUTES. EYELIDS SHOULD BE HELD APART DURING IRRIGATION. KEEP EYES WET WITH WATER UNTIL AN EYE SPECIALIST IS IN ATTENDANCE.

SKIN.....: IMMEDIATELY FLUSH WITH COPIOUS WATER. IF PHOSPHORUS REMAINS IMEEDDED IN THE SKIN, THE CONTAMINATED AREAS SHOULD BE SUBMERGED IN WATER. VISIBLE PIECES OF PHOSPHORUS SHOULD BE REMOVED.

MATERIAL SAFETY DATA 7723 14 0

NFPA Designation 704

'PHORUS, ELEMENTAL

DEGREE OF HAZARD

4 = EXTREME
3 = HIGH
2 = MODERATE
1 = SLIGHT
0 = INSIGNFICANT

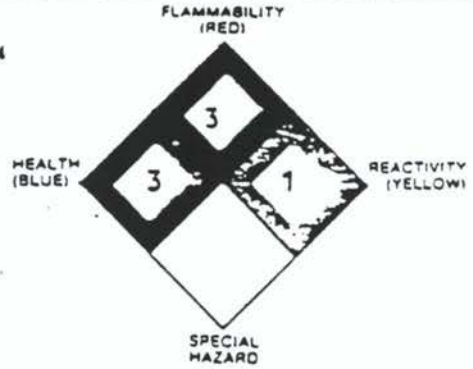

EMERGENCY TELEPHONES:
PLANT: (208) 236-8200 POCATELLO, ID
CHEMTREC: (800) 424-9300 TRANSPORTATION
MEDICAL: (303) 595-9048 ROCKY MTN

REVISION: EFFECTIVE: 10/17/85 PRINTED: 04/29/88

EMERGENCY AND FIRST AID PROCEDURES

INHALATION.....: REMOVE VICTIM IMMEDIATELY TO FRESH AIR. IF BREATHING HAS STOPPED, PERFORM ARTIFICIAL RESPIRATION. CALL A PHYSICIAN.

INGESTION.....: CALL A PHYSICIAN IMMEDIATELY. AVOID CONTACT FROM VOMITUS OR OTHER BODY FLUIDS, SINCE THEY MAY CONTAIN PHOSPHORUS THAT CAN CAUSE BURNS OF EYES AND SKIN. IF THE VICTIM IS CONSCIOUS INDUCE VOMITING BY GIVING LARGE QUANTITIES OF WATER TO DRINK AND HAVING THE PERSON TOUCH BACK OF THROAT WITH HIS FINGER. DO NOT ATTEMPT TO MAKE AN UNCONSCIOUS PERSON VOMIT.

CONTAMINATION PROCEDURE: KEEP WETTED OR IMMERSED IN WATER UNTIL ALL VISIBLE PHOSPHORUS PICKED OFF AND FLUSHED AWAY.

NOTES TO PHYSICIAN.....: IMMEDIATE GASTRIC LAVAGE WITH 4 LITERS OF POTASSIUM PERMANGANATE (1:5000 OR 2 PERCENT HYDROGEN PEROXIDE FOLLOWED BY ACTIVATED CHARCOAL) SHOULD BE PERFORMED. MINERAL OIL OR PETROLATUM BY MOUTH OR GAVAGE HAS BEEN USED TO PREVENT ABSORPTION AND HASTEN ELIMINATION; A DOSE OF 200-250 ML INITIALLY AND FOLLOWED BY 30 ML EVERY 3 HOURS FOR 48 HOURS IS GIVEN. MAGNESIUM OR SODIUM SULFATE CATHARTICS MAY BE INDICATED, IF NO GI BLEEDING OR DIARRHEA IS PRESENT. TREATMENT IS SYMPTOMATIC AND SUPPORTIVE, WITH ATTENTION TO SHOCK, ACIDOSIS, BLOOD LOSS, CARDIAC ARRHYTHMIAS, SEIZURES, INITIALLY AND HEPATIC AND RENAL FAILURE LATER.

SPECIAL PROTECTION

VENTILATION REQUIREMENTS.: NOTHING SPECIAL ASSUMING PROPER CONTAINMENT OF PHOSPHORUS AT ALL TIMES. USE SELF CONTAINED BREATHING APPARATUS, IF VAPOR IS EXPECTED.

RECOMMENDED PERSONAL.....: SEE BELOW.

PROTECTIVE EQUIPMENT
RESPIRATORY.....: WEAR NIOSH/MSHA APPROVED SELF-CONTAINED BREATHING APPARATUS, NEAR BURNING PHOSPHORUS.

Chemical Safety Data Sheet SD-16

PROPERTIES AND ESSENTIAL INFORMATION

FOR

SAFE HANDLING AND USE

OF

PHOSPHORUS, ELEMENTAL

Chemicals in any form can be safely stored, handled or used if the physical, chemical and hazardous properties are fully understood and the necessary precautions, including the use of proper safeguards and personal protective equipment, are observed.

REVISED 1976

MANUFACTURING CHEMISTS ASSOCIATION

1825 CONNECTICUT AVENUE, N. W. WASHINGTON, D. C. 20009

Chemical Safety Data Sheet

PHOSPHORUS

PREFACE

Phosphorus, elemental, is a solid material at ambient temperatures that ignites spontaneously in air and burns vigorously. It is classified as a flammable solid by Department of Transportation regulations.

Due to its low melting point, 44.1°C (111°F), bulk quantities are usually shipped in a molten form, covered with water, inert gas, or a combination of both.

Phosphorus will cause severe burns on contact with the body or eyes. When burning in air, it emits large volumes of acrid white fumes which are very irritating when breathed.

The full text of this chemical safety data sheet should be consulted for details of the hazards of phosphorus and recommendations for their control.

FIRST AID—SEE PAGE 11

For assistance in the event of any emergency involving this chemical in transportation, call MCA's **Chemical Transportation Emergency Center.**

CHEMTREC

(800) 424-9300 * *(Use 483-7616 in District of Columbia)*

Toll-free, day or night

* Use long distance access number if required.

In CANADA, call Canadian Chemical Producers Association's TEAP (Transportation Emergency Assistance Plan)

TABLE OF CONTENTS

	Page
Introduction	
1. **NAME**	5
2. **PROPERTIES**	5
2.1 Grade and Strength	5
2.2 Important Physical and Chemical Properties	5
3. **TRAINING AND JOB SAFETY**	6
3.1 Employe Education and Training	6
3.2 Safety Review	6
4. **HEALTH HAZARDS—MEDICAL MANAGEMENT, FIRST AID, AND PROTECTIVE EQUIPMENT**	6
4.1 Health Hazards	6
4.2 Medical Management	7
4.3 First Aid	7
4.4 Personal Protective Equipment	8
5. **FIRE HAZARDS, FIRE FIGHTING**	9
5.1 Fire Hazards	9
5.2 Fire Fighting	9
6. **INSTABILITY, REACTIVITY HAZARD AND CONTROL**	9
6.1 Instability Hazards	9
6.2 Reactivity Hazards	9
7. **ENGINEERING CONTROL OF HAZARDS**	9
7.1 Building Design	9
7.2 Equipment Design	9
7.3 Ventilation	10
7.4 Electrical Equipment	10
8. **SHIPPING, LABELING, HANDLING**	10
8.1 Storage	10
8.2 Labeling and Identification	10
8.3 Non-Bulk Containers	12
8.4 Bulk Transport	12
8.5 Shipping	13
9. **WASTE DISPOSAL GUIDELINES AND SPILL CONTROL**	13
10. **TANK AND EQUIPMENT CLEANING AND REPAIRS**	13
10.1 Preparation for the Job	13
10.2 Preparation of the Tank or Equipment	13
10.3 Tank Entry	14
10.4 Emergency Rescue	14
10.5 Cleaning and Repairs to Tank and Equipment	14

Chemical Safety Data Sheet

PHOSPHORUS

1. NAME

Chemical Name:	Phosphorus
Common Name:	Phosphorus, white phosphorus, yellow phosphorus
Formula:	P_4

2. PROPERTIES

2.1 GRADE AND STRENGTH

Elemental white or yellow ..... 99.9% (Amorphous (red) phosphorus is not covered in this data sheet)

2.2 IMPORTANT PHYSICAL AND CHEMICAL PROPERTIES

Physical	Waxy solid
Ignition Temperature	Spontaneously ignites in air
Boiling Point	280.5°C (536.9°F)
Color	Colorless to pale yellow to deep straw (in solid form under water it is chalky white)
Corrosivity	None in absence of air (See 5.2 Reactivity Hazards)
Deliquesence—Hygroscopicity	None
Heat of Combustion	5.9 kilocalories per gram
Heat of Fusion	5.0 calories per gram
Heat of Vaporization	101 calories per gram
Light Sensitivity	Turns red in sunlight
*Melting Point	44.1°C (111°F)
Odor	Mildly characteristic (phossy). Fumes from burning phosphorus are pungent, sharp.
Reactivity	Dangerously so in air or with oxidizing agents (See 5.2 Reactivity Hazards)
Specific Gravity	
at 20°C (68°F) Water	1.8231
at 25°C (77°F) Water	1.8198
at 50°C (122°F) Water	1.737
Solubility in H_2O	0.003% at 20°C (68°F)
Specific Heat	0.19 at 7°C (44.6°F) to 30°C (86°F)
**Thermal Expansion	3.5% at melting point
Vapor Density	(Air = 1) 4.42
Viscosity	1.694 centipoise (pure), 0.967 (saturated with water) at 50°C (122°F)
Threshold Limit Value	0.1 mg/m³ 1974—ACGIH, American Conference of Governmental Industrial Hygienists

* Liquid phosphorus must be super cooled to 39.1°C (102°F) to solidify completely without leaving a liquid core.

** *Caution*—Phosphorus covered with a thin layer of water can shrink away from the sides of the tank car upon solidification, thus draining the water cover from the surface of the phosphorus, leaving it exposed.

3. TRAINING AND JOB SAFETY

3.1 EMPLOYE EDUCATION AND TRAINING

3.1.1 Safe handling of phosphorus depends largely upon the effectiveness of employe education, proper operating procedures, the use of safe equipment and diligent supervision.

3.1.2 This data sheet contains pertinent material that should be included in the employe training activity. Additionally the MCA publications of Case Histories of Accidents in the Chemical Industry provide details of accidents and injuries involving phosphorus that may be useful.

3.1.3 Employes should be instructed in the hazards of this chemical. Speed in stopping the combustion of phosphorus is of primary importance. First-aid treatment should be started at once in all cases of contact with phosphorus, in any form, or serious injury may result. Skin exposure requires the immediate immersion of the affected area in water followed by medical attention. Contaminated clothing should be removed immediately, preferably while showering. Eye exposure requires immediate decontamination with plain water at an eye bath for at least 15 minutes, followed by medical attention.

3.1.4 Employes should shower daily on finishing work. Food should not be stored or eaten near the place where phosphorus is handled. Any abnormal condition of the jaw or mouth should be reported immediately.

3.2 SAFETY REVIEW

For continued safe operation it is important for supervision to execute a thorough process review at regular intervals. For maximum effectiveness, this review should cover all aspects of the operation and should include the participation of selected representatives of operations, maintenance, technical and any other related activities. The MCA publication, "Guidelines for Risk Evaluation and Loss Prevention in Chemical Plants (1970)" may be helpful.

4. HEALTH HAZARDS—MEDICAL MANAGEMENT, FIRST AID, AND PROTECTIVE EQUIPMENT

4.1 HEALTH HAZARDS

Phosphorus ignites spontaneously when exposed to air and contact with the skin or clothing may cause severe burns. If combustion takes place in a confined space, oxygen may be consumed below a safe breathing level. Moderate concentrations of the vapors from burning phosphorus are irritating to the eyes, nose, throat and lungs.

If phosphorus is taken by mouth, it is absorbed from the gastrointestinal tract. It can also be absorbed from the lungs. In the modern utilization of phosphorus in industry, the principal mode of exposure is by inhalation. It is possible that the absorption of the lower oxides might produce edema of the lungs.

After the absorption of a sufficient amount of phosphorus, acute toxic effects are produced in the liver and are accompanied by vomiting and marked weakness. The long continued absorption of phosphorus may result in necrosis of the mandible or maxilla (jawbone) and is known as "phossy jaw."

Phosphine (PH_3) is a highly flammable toxic foul-smelling gas. It may be present in phosphorus as a polymer or generated at low rates at a temperature of 85°C (185°F) and with the water at a pH of 6.5. As the pH of the water increases, the rate of phosphine generation increases. Phosphine, which has a characteristic odor of rotten onions or decaying fish, has a Threshold Limit Value (TLV) of 0.3 ppm. Phosphine can ignite spontaneously in air.

4.1.1 Warning Properties

Elemental phosphorus has no strong warning properties (See 2. Properties—Odor).

4.1.2 Acute Toxicity

4.1.2.1 *Local Effects*

Phosphorus, when in contact with air spontaneously ignites and burns freely and will cause severe local tissue burns if it contacts the skin. Combustion of phosphorus on the skin results in the formation of meta- and ortho-phosphoric acid and small amounts of red phosphorus. These compounds are of no importance clinically, as the heat coagulation of the tissues is the important effect of phosphorus burns. A firm scab is produced and is surrounded by blisters.

Phosphorus is especially hazardous to the eyes and produces severe damage.

4.1.2.2 *Systemic Effects*

4.1.2.2.1 *Phosphorus*

The absorption of phosphorus when taken by mouth may be delayed as much as 2 hours. In a

few hours after ingestion there is an initial stage of local gastrointestinal irritation characterized by nausea, vomiting and severe abdominal pain. The vomitus may have a garlic-like odor and may be phosphorescent (luminous in the dark.)

After 24 to 36 hours, the symptoms subside. After a few hours, or a few days, nausea, vomiting and abdominal pain reappear with diarrhea and abdominal tenderness. The skin becomes jaundiced. The toxic state lasts 2 to 15 days, averaging 8 days. In fatal cases, most deaths occur within 4 to 5 days. The fatal dose is generally about 100 mg, but even 15 mg may produce a severely toxic reaction.

Absorption of phosphorus through the skin following severe burns may produce systemic toxicity.

4.1.2.2.2 *Phospine*

When low concentrations are inhaled, phosphine may cause headache, dizziness, tremors, general fatigue, burning substernal pain, nausea, vomiting and diarrhea. A productive cough with a fluorescent-green sputum, acute dyspnea and pulmonary edema may develop. Death is usually preceded by tonic convulsions which may occur suddenly after the patient has apparently recovered.

Phosphine's characteristic decayed fish odor is barely detectable at concentrations of 1.5 to 3 ppm. Serious effects are produced following exposure to 5 to 10 ppm for several hours. Death occurs following ½ to 1 hour exposure to concentrations of 400 to 600 ppm.

4.1.3 Chronic Toxicity

Chronic poisoning occurs from long continued absorption of phosphorus especially through the lungs but also through the gastrointestinal tract.

A form of generalized weakness, accompanied by anemia, loss of appetite, gastrointestinal complaints, chronic cough and pallor has been reported to be due to systemic phosphorus poisoning. The most common form of chronic poisoning also causes changes in the long bones. Seriously affected bones may become brittle, leading to spontaneous fractures. Industrially, necrosis of the bone is seen only in the jawbones. In such cases, the first symptoms are usually toothache and excessive salivation, followed by the loosening of one or more teeth and severe pain and swelling of the jaw. A suppurative ulceration develops in the gums around the tooth or tooth socket which may invade the bone itself. There is a gradual progression of the process until most of the affected bone is involved. In extreme cases severe facial deformity may result.

The chronic effects produced by phosphine are essentially the same as those produced by phosphorus.

4.2 MEDICAL MANAGEMENT

4.2.1 Physical Examinations

4.2.1.1 *Preplacement Physical Examinations*

Preplacement medical examinations should be directed toward eliminating from exposure to phosphorus those workers with any evidence of history of liver disease and those workers with any of the following dental defects: gingivitis, pyorrhea, carious teeth, exposed sockets and dental cysts. Absence of all natural teeth is no contraindication.

4.2.1.2 *Periodic Examinations*

An annual physical examination should be given to each employe who is frequently exposed to phosphorus. He should be instructed to report any illness he experiences.

4.2.1.3 *Dental Examinations*

Periodic dental examinations are particularly indicated in those who work with phosphorus. The frequency of these examinations is dependent upon the type and degree of exposure. The examination interval therefore may vary from once a year to as frequent as once a month. Undesirable dental conditions should be corrected and the employe should not be allowed to work around phosphorus until the condition has been properly treated. Full mouth dental x-rays should be made before employment. This should be repeated at the discretion of the dentist.

4.3 FIRST AID

4.3.1 General Principles

Speed in stopping the combustion of phosphorus is of primary importance and, secondly, the removal of the material from contact with the skin. First-aid treatment should be started at once in all cases of contact with phosphorus in any form or serious injury may result. Refer all injured persons to qualified personnel even when the injury appears to be slight.

4.3.2 Contact with Skin

Immediate application of water to the area will stop combustion of the phosphorus. This may be accomplished by plunging the affected parts in water or by the copious use of running water. Contaminated clothing should be removed promptly. If available, ice water will help relieve pain and help minimize severity of burn. The area should be irrigated for at least 30 minutes. If small particles of phosphorus are adherent to the skin, they can be seen in a darkened area as they are luminous. The small particles of phosphorus can be removed with tweezers while the part is immersed in water.

It should be borne in mind that following severe burns, and particularly in those involving a large area of the body surface, shock may appear at any time. Shock should be treated promptly. No oil or ointment of any kind should be applied to burned areas without the sanction of the attending physician.

CAUTION: It should be remembered that the phosphorus stops burning after the application of water but when the area dries, due to the evaporation of water, the phosphorus will spontaneously ignite again. Drying may be prevented by covering the area with a cloth wet with water. The phosphorus must be removed as soon as possible.

A physician should be called at the earliest possible moment.

4.3.3 Contact with Eyes

If even minute quantities of phosphorus, either in solid form or in solution, enter the eyes they should be irrigated immediately and copiously with water for a minimum of 15 minutes. The eyelids should be held apart during the irrigation to ensure contact of water with all the tissues of the surface of the eyes and lids. A physician, preferably an eye specialist, should be called in attendance at the first possible moment. If a physician is not immediately available, the eye irrigation should be continued until the services of a physician are available.

Ophthalmologists may be interested in a method of treatment for chemical burns of the eye described by Ralph S. McLaughlin, "Chemical Burns of the Human Cornea," American Journal of Ophthalmology, 29: 1355, 1946.

4.3.4 Ingestion

If phosphorus is swallowed, either in a paste or as "phossy water," a physician should be called immediately. The patient should be made to vomit at once. If necessary, stick finger down the throat to cause vomiting. Repeated vomiting should be encouraged by giving large quantities of fluids. The injurious results of absorption may not occur for a matter of hours, therefore, gastric washing should be carried out whenever a patient is seen. There is no established antidote. Do not give oily cathartics; avoid fatty foods, including milk.

NEVER GIVE ANYTHING BY MOUTH OR ATTEMPT TO CAUSE VOMITING IN AN UNCONSCIOUS PATIENT.

4.3.5 Inhalation

Burning phosphorus in a confined area may cause a depletion of the oxygen from the air to a sufficient extent to cause asphyxiation. The patient should be removed at once to fresh air and effective artificial respiration initiated immediately if breathing has ceased. A physician should be called at once.

4.4 PERSONAL PROTECTIVE EQUIPMENT

4.4.1 Availability and Use

Personal protective equipment cannot be considered as a substitute for tight controls in the handling of phosphorus. The potential risk of contact with phosphorus dictates the need for an adequate supply of approved personal protective equipment be provided and prescribed use enforced.

4.4.2 Eye Protection

Whenever the danger of contact with phosphorus is present, full eye and face protection should be worn. This can best be provided by chemical safety goggles with impact resistant glass or plastic lenses and a full length face shield. A full chemical hood which completely covers the head, face and neck may also be considered.

Approved spectacle-type safety glasses are recommended as minimum eye protection for other work areas.

4.4.3 Respiratory Protection

Entry into bins, hoppers and vessels in phosphorus related operations presents a potential exposure to toxic vapors of phosphorus, phosphine, flouride, carbon monoxide, etc. Unless thorough air sampling indicates the atmosphere is free of toxic vapor and that an adequate oxygen level is assured, maximum respiratory protection in the form of self-contained breathing equipment or a supplied air breathing system should be worn.

In other open work areas where minimal respiratory protection may be indicated, a chemical cartridge-type respirator may suffice.

4.4.4 Head Protection

Approved safety hats should be worn where there is an exposure to head injury.

4.4.5 Foot Protection

Leather or rubber safety shoes with built-in steel toe caps are recommended for workers in all phosphorus related work areas. High top styles are preferred.

4.4.6 Body, Skin and Hand Protection

Because phosphorus ignites in air, contact with the skin may result in very serious burns. Where a potential exposure to phosphorus exists such as opening a line, a protective suit with hood offers ideal protection. However, protective coats, trousers, boots and gloves offer good body protection. The head and face should then be protected by safety hat, chemical goggles and face shield.

Protective suits exposed to phosphorus should be washed immediately with water to remove phosphorus particles.

5. FIRE HAZARDS, FIRE FIGHTING

5.1 FIRE HAZARDS

Phosphorus ignites spontaneously in air and burns vigorously. Fires can be controlled by covering with water, sand, or earth to exclude the air. Foam extinguishers may also be used. Avoid the use of high pressure water streams.

5.2 FIRE FIGHTING

Phosphorus ignites spontaneously upon exposure to air and emits clouds of white acrid fumes. Self-contained breathing equipment is recommended for fire fighting activities.

Large spills of phosphorus should be restricted by damming with earth or sand. A shallow layer of water on the surface of burning phosphorus will effectively extinguish the fire. Water application should be made as softly as possible. High pressure streams scatter molten phosphorus with each of the small particles burning violently. Water application regardless of pressure, should use fog or spray nozzles to provide gentle application. Dry chemical extinguishers are relatively ineffective. Foam extinguishers can be used to bring a spill fire under control.

A leak from a phosphorus line or tank can often be controlled by applying a cooling stream of water at the leak to chill and solidify the liquid phosphorus. Solid phosphorus unless covered with water, sand or earth to exclude the air will slowly melt, and ignite.

Fire hydrants and hose stations should be distributed so that spill fires may be approached from an upwind position.

Except in small confined spaces the use of steam on phosphorus fires should be avoided because it tends to spread the fire and does not aid in cooling the phosphorus.

6. INSTABILITY, REACTIVITY HAZARD AND CONTROL

6.1 INSTABILITY HAZARDS—None

6.2 REACTIVITY HAZARDS

When exposed to air, phosphorus ignites spontaneously and burns vigorously. Phosphine, a flammable, toxic gas, can be generated when phosphorus contacts oxidizing agents or when the phosphorus water cover is allowed to reach a pH over 6.5 at a temperature of 85°C (185°F). A phosphine polymer can also exist in phosphorus so phosphine may always be present. Phosphine can ignite spontaneously.

Hydrogen has also been known to be present above a phosphorus surface. If the phosphorus water cover is allowed to drop below 5.5 pH, the steel container may be attacked chemically and lead to hydrogen generation.

The phosphorus water cover should be controlled between a 5.5-6.5 pH range for maximum safety.

7. ENGINEERING CONTROL OF HAZARDS

7.1 BUILDING DESIGN

Since the production of elemental phosphorus involves operations which create carbon monoxide, phosphine, smoke, dust, molten slag and metal—structures, particularly the furnace plant should be designed to allow as much natural ventilation as possible. To obtain more effective ventilation it may be necessary to provide a fume removal system.

7.2 EQUIPMENT DESIGN

7.2.1 Since elemental phosphorus ignites spontaneously upon exposure to air, it is essential that it be contained or handled in closed systems and stored under a water cover.

7.2.2 Storage tanks may be constructed of concrete or of welded steel without bottom or side outlets.

7.2.2.1 Above grade storage tanks should be placed in retaining basins, also constructed of concrete or of welded steel, without bottom or side outlets.

7.2.2.2 The basins should be large enough to retain the full contents of the tanks or tanks with an allowance for water coverage. Basins should be cleaned periodically of accumulated dirt to retain their original design capacities.

7.2.2.3 Water lines should be installed to the retaining basins to permit flooding.

7.2.2.4 Sealed tanks should be equipped with frangible discs or safety valves and seals set to release at a predetermined pressure. An ample safety factor should be allowed to protect the tank itself. Discharge from these devices should be directed into a retaining basin.

7.2.2.5 Storage tanks should be equipped with heating coils for either hot water or steam.

7.2.3 To avoid corrosion at the water line, all pipe lines should be equipped with non-corrosive sections at those points where the pipes enter the liquid.

7.2.3.1 The pipe used to carry phosphorus being pumped or transferred, should be jacketed with hot water or steam traced to prevent freezing of the phosphorus, and should be installed to allow for expansion and contraction.

7.2.3.2 Pipe lines for phosphorus should be sloped to the outlet to allow maximum drainage. A warm water connection should be made to flush out the lines after use.

7.2.4 Plug or ball valves (all steel) are preferable to other types. Flange shields are suggested for protection in case of gasket failure. Where possible, all connections to valves or tanks should be of the welded flange type. Valves should be hot water jacketed or steam traced.

7.3 VENTILATION

Good ventilation is essential in all phosphorus handling operations. Building design and equipment layout should take full advantage of natural ventilation. However, it may be necessary to provide mechanical ventilation at sources of dusts, fumes and vapors to ensure that a safe atmosphere is being maintained.

7.3.1 Routine air sampling of the work environment for phosphorus * and other potential contaminants, such as phosphine, carbon monoxide and sulfur dioxide is recommended to ensure the adequacy and effectiveness of the ventilation systems and other engineering controls.

7.4 ELECTRICAL EQUIPMENT

General purpose electrical installations are normally used in phosphorus production areas.

* A gas chromatic method of detecting 0.004 mg of elemental phosphorus per cubic meter of air has been developed by C. D. Bohl and E. F. Kaelble and reported in American Industrial Hygiene Association Journal, Volume 34, pp. 306-309. Determination of Elemental Phosphorus in Air by Gas Chromatography, 1973.

8. SHIPPING, LABELING, HANDLING

8.1 STORAGE

8.1.1 Phosphorus is stored under water. In contact with water certain gaseous compounds are formed, and minute particles detach themselves from the main body of the phosphorus which oxidize in the cover water and slowly acidify it. The temperature of the cover water is a factor in the acidification. The process will in time corrode the container above the phosphorus level. The pH of the cover water should be periodically checked for acidity. When the acidity is below pH 5.5, the cover water should be neutralized to pH range 5.5-6.5 with lime, ammonia or soda ash. Tests show that a pH up to 6.5 is a safe limit for alkalinity to avoid the evolution of phosphine. Dry soda ash should never be dumped into the water since this could result in the formation of high pH around the soda ash particles which greatly increases the evolution of phosphine. Soda ash should be dissolved in hot water and the solution pumped into the water and thoroughly mixed.

8.1.2 Storage tanks should be remote from congested areas. Personnel traffic should be restricted to essential workers only.

8.1.3 Mechanical ventilation should be provided where phosphorus is stored or handled inside buildings.

8.2 LABELING AND IDENTIFICATION

8.2.1 DOT Labeling and Identification *

8.2.1.1 Each container shall be marked with the proper shipping name "Phosphorus, white or yellow, dry" or "Phosphorus, white or yellow, in water" per DOT 173.401(a).

8.2.1.2 Outside shipping containers, except bulk containers, must bear the "Flammable Solid" label as described in DOT 173.410.

8.2.1.3 Tank cars and other cars containing one or more containers of phosphorus must bear the DANGEROUS placard per DOT 174.541 (a)(1), (2), (3) and tank cars previously loaded with phosphorus, when shipped filled with water or inert gas, must bear the "Caution—Residual Phosphorus" placard per DOT 174.555.

8.2.1.4 Tank motor vehicles, whether loaded or empty, and other motor vehicles transporting phosphorus, white or yellow, dry or wet, in any quantity of 1000 pounds or more, must be placarded FLAMMABLE per DOT 177.823 (a)(1), (2), (3) and (b) (1).

* DOT Regulations should be checked for changes.

8.2.2 Precautionary Labeling

The Manufacturing Chemists Association recommends that all containers of phosphorus, white or yellow, in water should bear a label as shown. The text is designed for the product as shipped for industrial use. It should be used in addition to or in combination with any specific wording required by law. Since individual statutes, regulations or ordinances may require that particular information be included

PHOSPHORUS
White or Yellow
(For Shipment Under Water)

DANGER! EXTREMELY FLAMMABLE
CATCHES FIRE IF EXPOSED TO AIR
CAUSES SEVERE BURNS
MAY BE FATAL IF SWALLOWED OR INHALED

Contents packed under water and will ignite if water is removed.

Do not get in eyes, on skin, on clothing.

Do not breathe vapor.

Wear heavy protective gloves, goggles, and face shield.

Keep container closed.

Use only with adequate ventilation.

Wash thoroughly after handling.

POISON
Call a Physician

FIRST AID:

In Case of Contact, immediately flush skin or eyes with plenty of water for at least 15 minutes while removing contaminated clothing and shoes. Keep skin area wet until medical attention is obtained. Wash clothing before reuse.

If Swallowed, induce vomiting by sticking finger down throat or by giving soapy water to drink. Repeat until vomit fluid is clear. Never give anything by mouth to an unconscious person.

If Inhaled, remove to fresh air. If not breathing give artificial respiration, preferably mouth-to-mouth. If breathing is difficult, give oxygen.

In Case of: Fire, Spill, or Leak—Cover with water, sand, or earth.

in a label, that certain information be displayed in a particular manner, or that a specific label be affixed to a container, the use of this label will not necessarily ensure compliance with such laws. Such laws include the Federal Hazardous Substances Act; Federal Insecticide, Fungicide and Rodenticide Act; and similar state and municipal legislation.

8.3 NON-BULK CONTAINERS

Phosphorus, white or yellow, is classified by the DOT as a Flammable Solid. As such it must be packed in DOT specification containers when shipped by rail, water, or highway and all DOT regulations governing loading, handling and labeling must be followed.

8.3.1 Type and Size

Authorized containers for phosphorus, white or yellow, are indicated in DOT 173.190. Special reference is made to shipments by rail express. The usual containers used for this commodity are as follows:

8.3.1.1 Phosphorus, white or yellow, wet (shipped under water).

8.3.1.1.1 DOT Spec. 15A or 15B. Wooden boxes with inside containers which must be hermetically sealed (soldered) metal cans, enclosed in other hermetically sealed (soldered) metal cans; or hermetically sealed (soldered) metal cans containing not over 1 pound each, enclosed in other watertight metal cans with screw-top closures; or hermetically sealed (soldered) metal cans enclosed in hermetically sealed (soldered) metal boxlining, DOT Spec. 2F.

8.3.1.1.2 DOT Spec. 5A, 6A, or 6B. Metal barrels or drums, not over 30 gallons capacity each.

8.3.2 When phosphorus is shipped or received in drums, care should be taken to see that all fittings are tight.

8.3.3 The plug in the bung opening should be loosened to prevent rupture of the drum before the material is heated to the proper temperature, i.e., above 44°C (111°F) and below 55°C (131°F), preferably to about 52°C (126°F) before applying water to displace the material.

8.4 BULK TRANSPORT

8.4.1 General

8.4.1.1 Loading and unloading operations should be conducted by fully trained, reliable employes under diligent supervision.

8.4.1.2 Loading and unloading stations should be equipped with emergency showers or tubs of water for emergency immersion of personnel who have come in contact with phosphorus.

8.4.1.3 See that the car or truck is spotted accurately and that the track or road is level. Preferably, loading and unloading operations should be conducted in limited personnel access areas and posted "Authorized Personnel Only."

8.4.1.4 The hand-brake should be set and standard chocks or rail clamps should be installed to block the wheels at the time of loading or unloading.

8.4.1.5 Shipper's instructions for unloading should always be followed and all precautionary markings on both sides of tank or dome should be read and observed.

8.4.1.6 Personnel engaged in connecting, loading or unloading lines or sampling should wear protective clothing (See 4.4 Personal Protective Equipment).

8.4.1.7 In the event of a leak in the tank car or tank truck or the fittings that cannot be stopped by following the instructions from the supplier (which may include a suggestion to play a stream of low pressure cold water on the leak point and through the external coils to freeze the phosphorus) or by simple adjustment or tightening, immediately contact the shipper or MCA CHEMTREC—800-424-9300 for further instructions.

8.4.1.8 Damage Enroute. In case a tank car or tank truck becomes damaged enroute so that it cannot proceed safely to its destination, every effort should be made to park it where it will not endanger people, traffic, or property. The police and fire department should be notified and public warned to stay away. If a leak or spill is involved, follow MCA Chem-Card precautions as available or *contact* shipper or MCA CHEMTREC—800-424-9300 for safe disposal instructions.

8.4.2 Tank Trucks

DOT Spec. MC 310, MC 311, or MC 312. Tank motor vehicles, without bottom outlet and with insulation at least 4 inches in thickness, except that 2 inches of insulation is authorized for tanks equipped with an exterior heating jacket. Interior heating coils are not authorized. The material must be immersed in water or be blanketed with an inert gas and be loaded at a temperature not exceeding 60°C (140°F). After unloading, the tank must be filled to its entire capacity with an inert gas or to its entire capacity with water having a temperature not exceeding 60°C (140°F) or a combination of water and inert gas.

Trucks should have their wheels chocked and jack stands are recommended for trailer support if tractor is removed.

8.4.3 Tank Cars

8.4.3.1 Derails should be placed on the unloading track approximately one car length from the

car being unloaded, unless the car is protected by a closed and locked switch or gate.

8.4.3.2 Metal "CAUTION" signs should be fastened to the track. Signs should be 12"x15", painted light blue. Use the legent "STOP—TANK CAR CONNECTED," with the letters in "STOP" four inches high. Signs are available from safety equipment dealers.

8.4.3.3 DOT Spec. 103, 103W, 111A60-F-1, 111A60-W-1, 111A100-W-1, 111A100-W-3. Tank cars without bottom outlet for discharge of lading and with approved dome fittings, external heater systems, and with insulation at least 3 inches in thickness, except that thickness of insulation may be reduced to 2 inches over external heater coils. Bottom wash-out nozzle of approved design may be applied. Approved clean-out nozzles may be applied to top of tanks to aid in cleaning. These are usually 10 inch I.D. nozzles closed with a bolted blind flange. The material must be immersed in water or be blanketed with an inert gas and be loaded at a temperature not exceeding 60°C (140°F). In cars DOT Spec. 103 and 103-W, the water must be loaded in the dome to not more than 50 percent of the capacity of the dome. In cars DOT Spec. 111A60-F-1, 111A60-W-1, 111A100-W-1, 111A100-W-3 which are without domes, the outage is in the tank shell. Cars without domes must not be loaded to more than 98 percent of shell capacity with phosphorus. The water cover should be adjusted to 99 percent of the shell capacity. Inert gas of appropriate pressure or a combination of gas and water may be used. After unloading, the tank must be filled to its entire capacity with an inert gas or its entire capacity with water at a temperature not exceeding 60°C (140°F). If unloading domeless cars fill with water to 99 percent of the shell capacity or an appropriate amount of inert gas or a combination of both. The unloaded car must be placarded with a caution placard described in DOT sect. 174.555 before being offered for return movement. See DOT Hazardous Material Tariff Section 174.562-66, Section 174.584(F), and 197.202-5 for placarding, billing, and special requirements in addition to Section 173.190.

8.5 SHIPPING

8.5.1 Phosphorus, white or yellow, wet (under water) shipped by rail express must be shipped in DOT Spec. 15A or 15B wooden boxes with inside containers which must be hermetically sealed (soldered) metal cans, containing not over 1 pound each, enclosed in other water-tight metal cans with screw-top closures, or with soldered closures. This method is also authorized for rail, highway, and water shipments.

8.5.2 Phosphorus, white or yellow, dry must be cast solid and shipped in DOT Spec. 6A, 6B, 6C metal barrels or drums not over 30 gallons capacity each.

8.5.3 Phosphorus, white or yellow, dry must not be shipped by rail express.

8.5.4 Unloading areas should be well supplied with tubs of water or emergency showers and eye baths which are easily accessible and plainly marked.

9. WASTE DISPOSAL GUIDELINES AND SPILL CONTROL

9.1 Discarding phosphorus, and materials contaminated with it, is not generally permissible. Contact with the supplier or a waste disposal company is suggested.

9.2 "Phossy water" must meet effluent standards before allowing it to flow out of the plant.

9.3 Solid or pasty residues may be burned subject to air emission standards.

10. TANK AND EQUIPMENT CLEANING AND REPAIRS

10.1 PREPARATION FOR THE JOB

The hazardous nature of tank inspection, cleaning, or repairs requires that the foreman and crew be selected, trained, and drilled carefully. They should be fully familiar with the hazards, and the safeguards necessary for the safe performance of the work.

10.2 PREPARATION OF THE TANK OR EQUIPMENT

Cleaning or making repairs inside a tank may be hazardous even though the tank contained a non-toxic, non-flammable material or even after the tank has been cleaned of toxic or flammable material.

10.2.1 Flush tank with hot water one or more times as needed. Water temperature should be at least 60°C (140°F) for flushing; however some phosphorus handlers use water temperatures as high as 90°C (194°F). Remove the phosphorus water but leave enough to barely cover the residue in the tank. Then add four to six inches of the coldest water available, in order to chill any remaining phosphorus or solid residue in the bottom of the tank.

10.2.2 Run water into the cooling coils of the tank twelve to sixteen hours before the tank is entered. The cooling water should be left on during the entire cleaning operation.

10.2.3 Wherever possible, tanks or vessels should be cleaned from the outside, through clean-out openings.

10.2.4 Pipe lines into or out of the tank or other apparatus should be disconnected, preferably by removing a complete small section, and providing a blank flange on the open end to protect against human error and unsuspected leaks. Valves, cocks, and blank flanges in the pipe line should not be relied upon.

10.2.5 Danger signs should be placed suitably to indicate when workmen are in the tank or other apparatus.

10.2.6 The portable electric lights and power tools should be in good condition and grounded. Low voltage lights are recommended.

10.3 TANK ENTRY

10.3.1 Be sure the tank can be left by the original entrance.

10.3.2 Lock electrical switches in the off position, remove drive belts, and otherwise completely safeguard against accidentally starting the agitating equipment or other moving parts located inside or adjacent to the tank entrance.

10.3.3 Before entering a tank and during the course of the work, tests should be made by a qualified person to determine that no further washing is necessary, that no oxygen deficiency exists and that no harmful gases are present.

10.3.4 The person entering the tank *must wear self-contained or supplied air breathing equipment at all times while in the tank*, together with rescue harness life line and wearing proper personal protective equipment.

10.3.5 One person in the tank at a time usually makes better progress than several. This is also considered safer, as it minimizes fouling of the air hose and life line with the piping or other equipment in the tank. The men should work in relays.

10.4 EMERGENCY RESCUE

10.4.1 Another person provided with the same equipment should be on guard at all times that worker(s) are in the tank. He should keep the man or men in the tank under constant observation. At least two men should be available to aid in rescue if it becomes necessary.

10.4.2 A water hose with a control valve at the outlet should be in a ready position to protect the man in the tank.

10.5 CLEANING AND REPAIRS TO TANK AND EQUIPMENT

10.5.1 When first entering the tank it will be noted that some burning has occurred on the walls leaving deposits of acid. The acid should be washed down into the water to prevent injury to the worker and damage to the equipment.

10.5.2 When the tank is cooled, all solids above the frozen phosphorus should be removed by means of a bucket. Then the solid phosphorus under the water in the bottom of the tank may be chipped and broken up with a chisel-pointed bar. The small pieces of phosphorus should be placed under water in a bucket to prevent burning and the generation of vapor.

10.5.3 Extreme care should be taken in removing buckets not to spill any material on the person in the tank.

APPENDIX 2
WASTE WATER COLLECTION
SUMP LINER

APPENDIX 2 WASTE WATER COLLECTION SUMP LINER

SUMP LINER CALCULATIONS

Calculation 15-2: Primary Containment Liner for Furnaces No. 2 & No. 3, Rev 0
Calculation 15-6: Sump V-3400 and Containment Area Volumes, Rev 0

SUMP LINER DESIGN DRAWINGS

300664 – Standard Details Drip Pans, Rev 2
300665 – Standard Details Double Wall Containment, Sht 1, Rev 0
300666 – Standard Details Double Wall Containment, Sht 2, Rev 1
300667 – Standard Details Double Wall Containment, Sht 3, Rev 4
300668 – Standard Details Double Wall Containment, Sht 4, Rev 1
300679 – Furnace #3 Wastewater Collection sump V-3400 Containment Plan, Rev 2
300680 – Furnace #3 Wastewater Collection sump V-3400 Containment Sections, Rev 2
300681 – Furn #3 Wastewater Collection sump V-3400 Containment Details, Sht 1, Rev 0
300682 – Furn #3 Wastewater Collection sump V-3400 Containment Details, Sht 2, Rev 2

SUMP MATERIAL OF CONSTRUCTION

Record of Telephone Conversation: RAT-022, 8-19-99
Basis for Material of Construction for the Wastewater Sumps

Raytheon Engineers & Constructors	**CALCULATION SUMMARY & CONTROL SHEET** Page 1 of 2	CALCULATION SET NO. 15-2			
		PRELIM.	FINAL ✓	VOID	REVISION
		DISCIPLINE STRUCTURAL			
PROJECT TITLE POINT OF GENERATION		J.O. 96096.088			

STRUCTURE OR SYSTEM _____ DESIGN CLASSIFICATION _____

SUBJECT PRIMARY CONTAINMENT LINER FOR FURNACES 2 & 3

COMPLETED BY REGIS COLASANTI DATE 5/4/99

CHECKED BY DAVE EICHELBERGER DATE 5/6/99

APPROVED BY [signature] DATE 5/26/99

SDE OR MGR OF STAFF GROUP

DISTRIBUTION _____

REASON FOR REVISION:

PROFESSIONAL ENGINEER REGISTERED 7667 5/26/99 STATE OF IDAHO C. THOMAS LOTKO II

TOTAL NUMBER OF SHEETS IN THIS ISSUE ____

SHEETS REVISED, ADDED, OR DELETED

PROBLEM STATEMENT:

DETERMINE THERMAL MOVEMENTS AND STRESSES IN PRIMARY CONTAINMENT LINER DUE TO RELEASE OF 220°F SLURRY INTO FURNACE NO. 2 WASTE WATER COLLECTION SUMP. (FURNACE NO. 3 IS IDENTICAL).

SUMMARY CONCLUSIONS:

THE LINER WAS ANALYZED FOR THERMAL MOVEMENTS AND STRESSES FOR 3 DIFFERENT ASSUMED DISTRIBUTIONS OF HOT SLURRY (SEE PG'S 2-4 OF CALCULATIONS).

THE FOLLOWING MOVEMENTS ARE AT THE EDGE OF THE LIP ON THE CONTAINMENT WALLS:

VERTICAL = 0.587" (PG. 24) < 5" ALLOWED (DET. 1, DWG. 300667)

⊥ TO WALL = 0.467" (PG. 25) < 5/8" ALLOWED (DET 1 & 4, DWG. 300667)

FOR TEMP. DISTR. #1 & 2 (CONSIDERED MOST REALISTIC), σ_{max} = 40595 psi (PG. 21). LOCALIZED YIELDING OVER A SMALL PORTION OF THE LINER CAN BE EXPECTED.

FOR TEMP. DISTR #3 (LOW PROBABILITY OF OCCURRENCE), AREAS OF LOCALIZED YIELDING EXIST IN THE SUMP (PG. 35). THIS IS NOT CONSIDERED A PROBLEM SINCE IT WILL NOT BE CYCLIC.

Raytheon Engineers & Constructors	**CALCULATION SUMMARY & CONTROL SHEET** Page 2 of 2	CALCULATION SET NO. 15-2			
		PRELIM.	FINAL ✓	VOID	REVISION
		DISCIPLINE STRUCTURAL			
PROJECT TITLE POINT OF GENERATION		J.O. 96096.083			

DESIGN BASIS:

1. LINER MAT'L: 316L S.S.; F_y = 35000 psi; $\alpha = 8.54 \times 10^{-6}$ in/in/°F
2. SLURRY TEMPERATURE = 220°F (PER FMC).
3. LINER CAN MOVE AWAY FROM UNDERLYING CONCRETE, BUT NOT INTO IT.
4. OUTSIDE EDGE OF LIP ON CONTAINMENT WALLS FREE TO MOVE IN ALL 3 DIRECTIONS.

~~UNVERIFIED ASSUMPTIONS/OPEN ITEMS.~~

REFERENCES: (SPECIFICATIONS, DRAWINGS, CODES, CALCULATIONS, TEXTS, REPORTS, COMPUTER DATA, FSAR, ETC.)

1. RE&C DWGS "POINT OF GENERATION - STANDARD DETAILS", DWG. NO'S 300666 - 300668, ISSUED 11/11/98.
2. RE&C DWGS "POINT OF GENERATION - FURNACE #2 WASTE WATER COLLECTION SUMP V-2400", DWG. NO'S 300674 - 300677, ISSUED 12/9/98.

COMPUTER PROGRAM DISCLOSURE INFORMATION:

PROGRAM USED: (NAME)	REV. NO.	REV. DATE	PROGRAM TYPE	RE&C VERIFIED
ANSYS	5.5	SEPT., 1998	1A	☐ YES ☒ NO

ANALYSIS DESCRIPTION	RUN NO.	RESULT
NON-LINEAR FINITE ELEMENT ANALYSIS FOR COMBINED DEAD AND THERMAL LOADS.		

The attached computer output has been reviewed, the input data checked, and the results approved for release.

INPUT CRITERIA BY R. COLASANTI DATE 5/4/99 CHECKED BY [signature] DATE 5/6/99

RUN BY R. COLASANTI DATE 5/4/99 APPROVED BY [signature] DATE 5/6/99

Form 5007 (Rev. 9/95)

Raytheon Engineers & Constructors

GENERAL COMPUTATION SHEET

PROJECT FMC - POCATELLO

SUBJECT LINER FOR FURNACE NO. 2

CALCULATION SET NO. 15-2

PRELIM. | FINAL ✓ | VOID

SHEET 1 OF 35

J.O. 96096.088

REV.

COMP. BY RJC DATE 3/3/99

CHK'D. BY [illegible] DATE 5/6/99

DATE

DATE

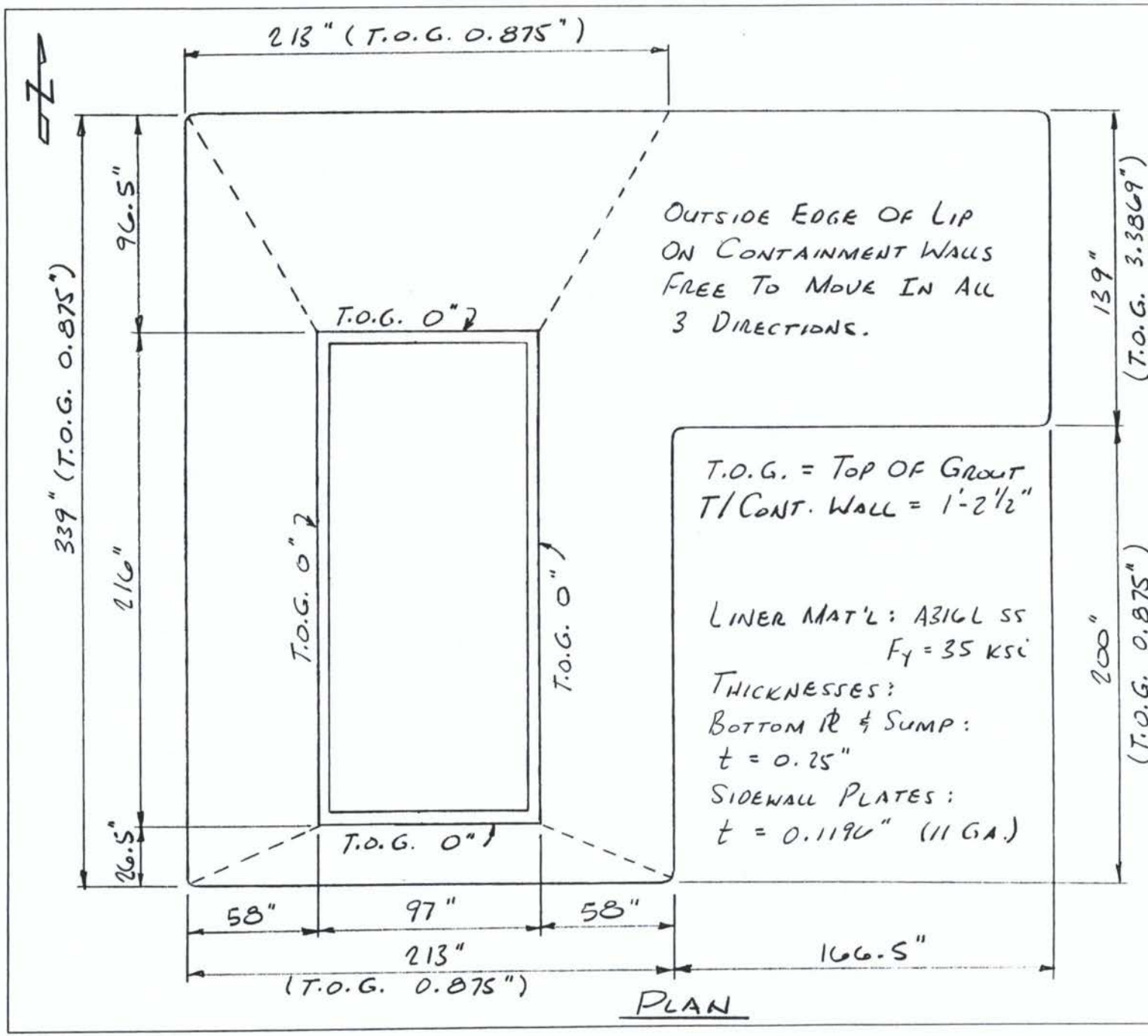

PLAN

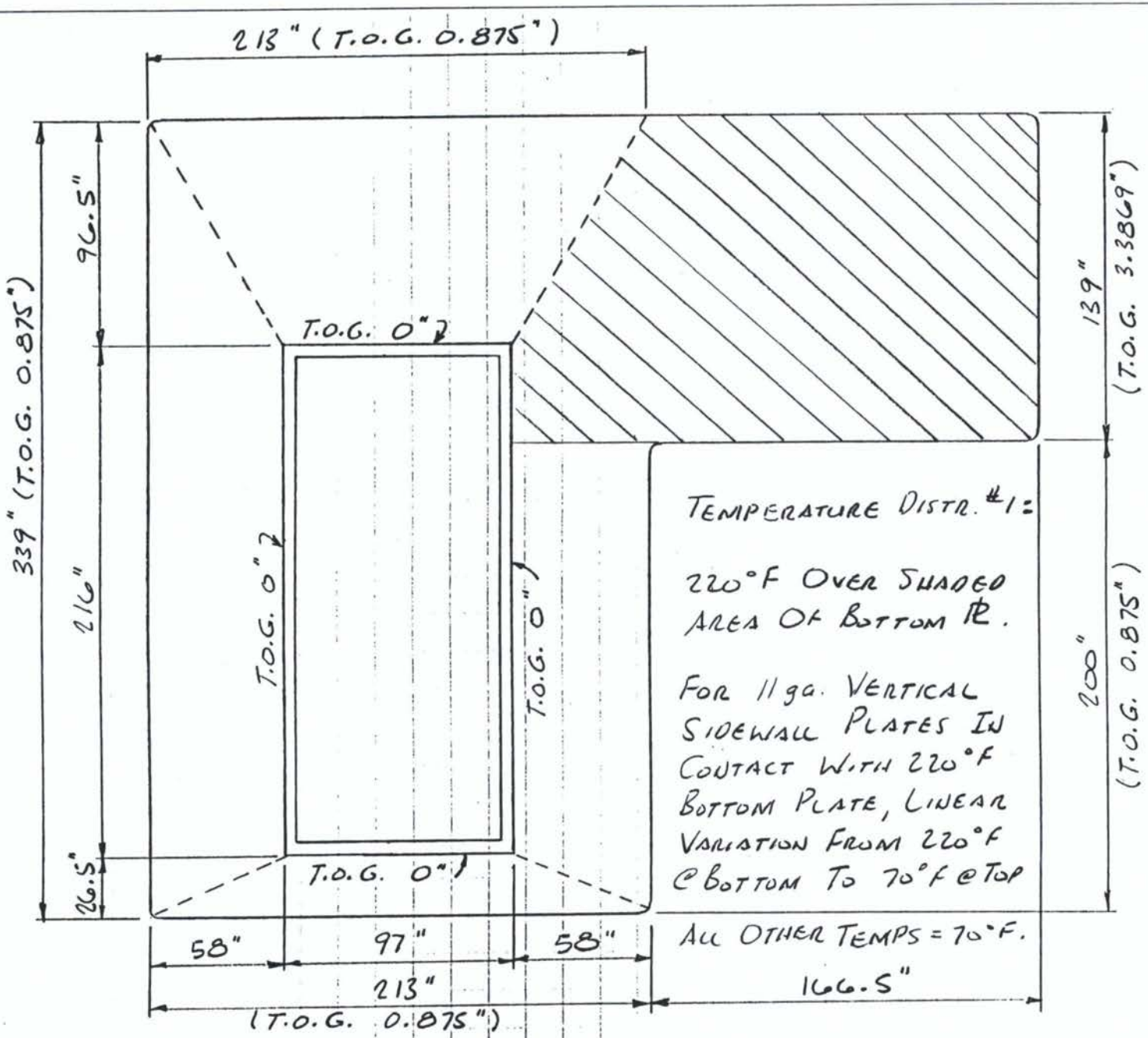

Form 5007 (Rev. 9/95)

Raytheon Engineers & Constructors

GENERAL COMPUTATION SHEET

PROJECT FMC-POCATELLO

SUBJECT LINER FOR FURNACE NO. 2

CALCULATION SET NO. 15-2

PRELIM. | FINAL ✓ | VOID

SHEET 2 OF 35

J.O. 96096.088

REV.

COMP. BY RJC DATE 3/3/99

CHK'D. BY RJC DATE 5/6/99

DATE

DATE

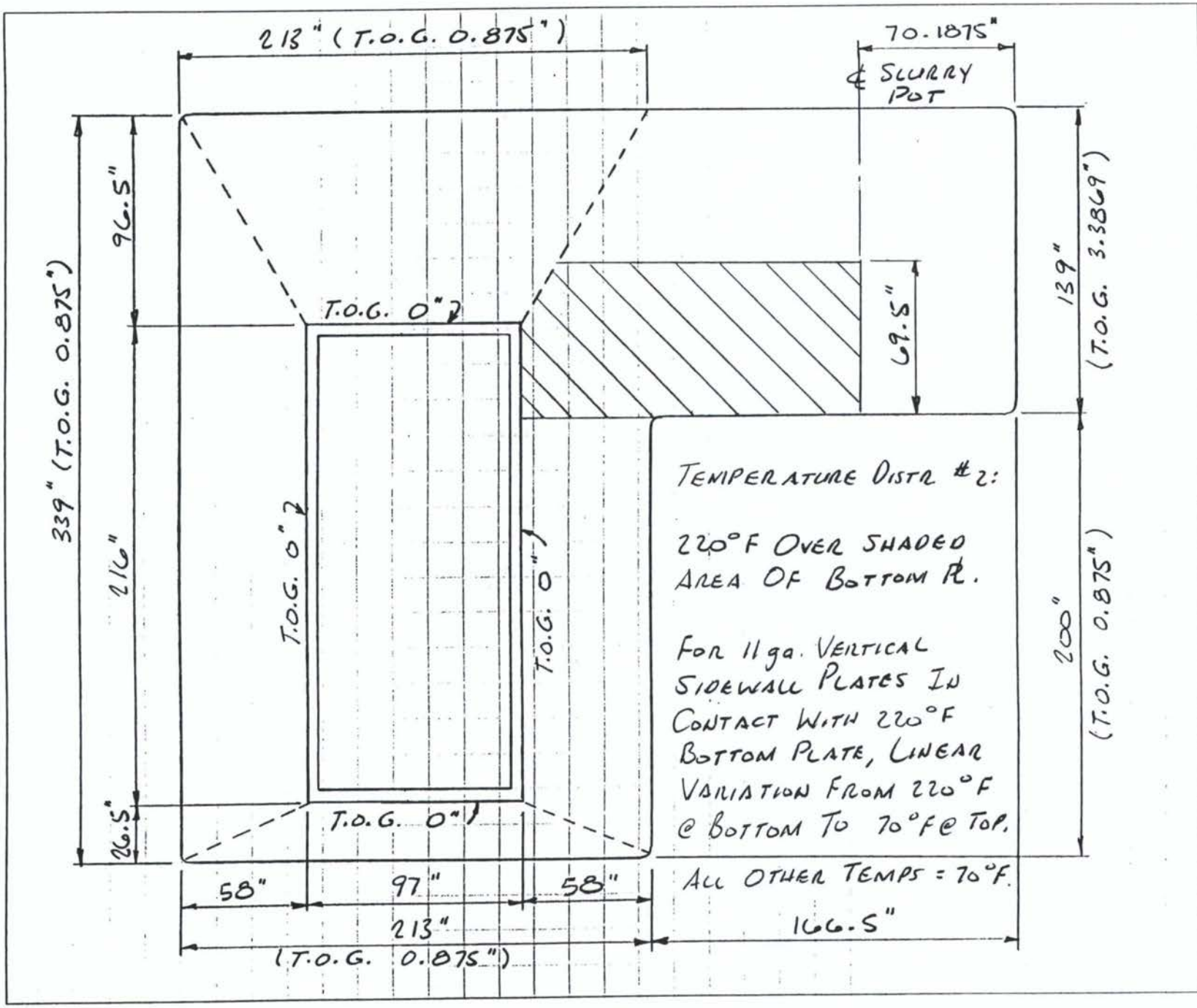

Form 5007 (Rev. 9/95)

Raytheon Engineers & Constructors

GENERAL COMPUTATION SHEET

PROJECT FMC-POCATELLO

SUBJECT LINER FOR FURNACE NO. 2

CALCULATION SET NO. 15-2

PRELIM. | FINAL ✓ | VOID

SHEET 3 OF 35

J.O. 96096.088

REV.

COMP. BY RJC DATE 3/3/99

CHK'D. BY [illegible] DATE 5/6/99

DATE

DATE

Form 5007 (Rev. 9/95)

Raytheon Engineers & Constructors

GENERAL COMPUTATION SHEET

PROJECT FMC - POCATELLO

SUBJECT LINER FOR FURNACE NO. 2

CALCULATION SET NO.			REV.	COMP. BY	CHK'D. BY
15-2				RJC	SLT
PRELIM.	FINAL	VOID		DATE 3/3/99	DATE 5/6/99
	✓				
SHEET 4	OF 35			DATE	DATE
J.O. 96096.088					

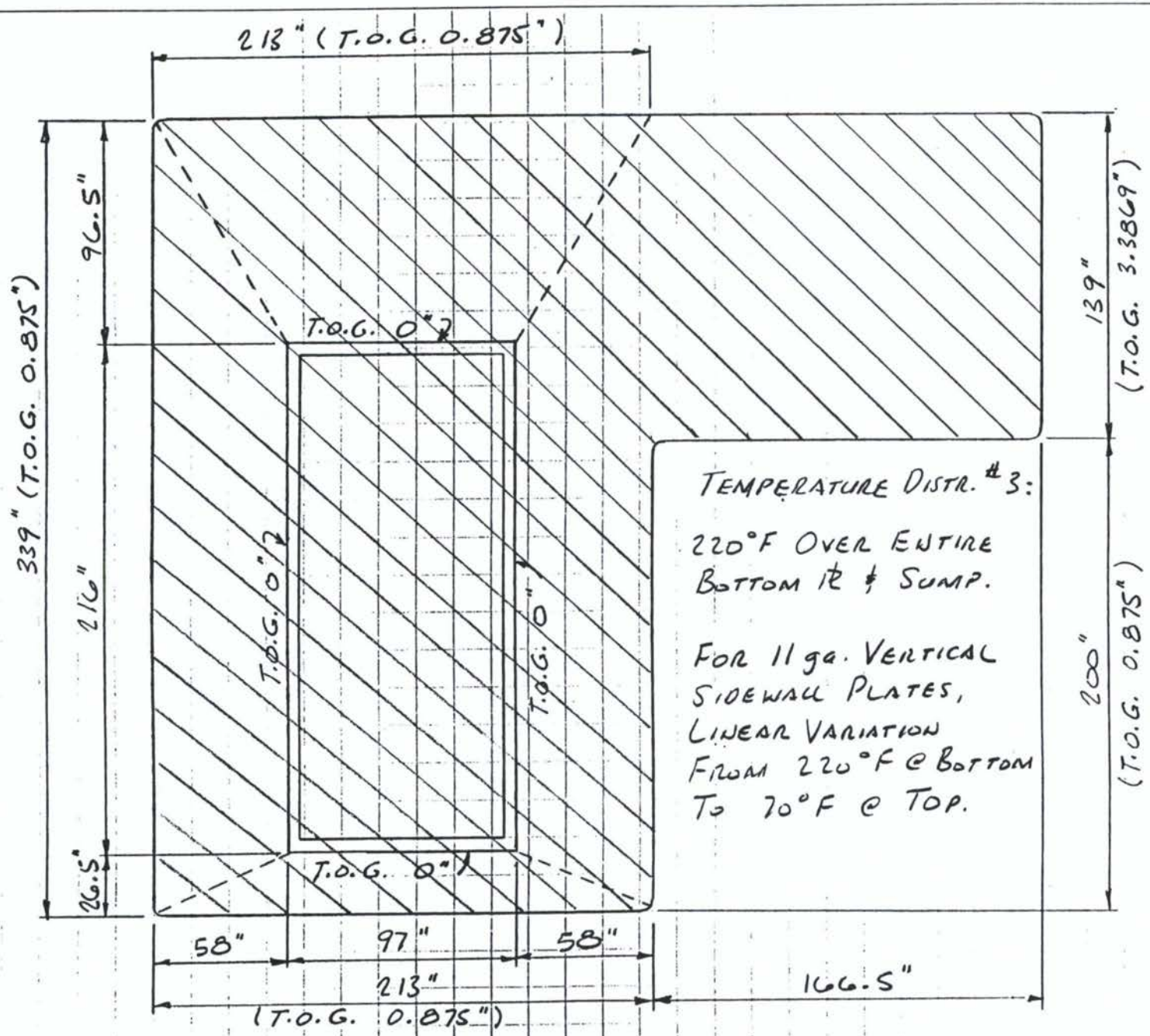

TEMPERATURE DISTR. #3:

220°F OVER ENTIRE BOTTOM PL & SUMP.

FOR 11 ga. VERTICAL SIDEWALL PLATES, LINEAR VARIATION FROM 220°F @ BOTTOM TO 70°F @ TOP.

Form 5007 (Rev. 9/95)

Raytheon Engineers & Constructors	GENERAL COMPUTATION SHEET	CALCULATION SET NO. 15-2	REV.	COMP. BY RJC	CHK'D. BY SSE
		PRELIM. / FINAL ✓ / VOID		DATE 3/3/99	DATE 5/6/99
PROJECT FMC- POCATELLO		SHEET 5 OF 35		DATE	DATE
SUBJECT LINER FOR FURNACE NO. 2		J.O. 96096.088			

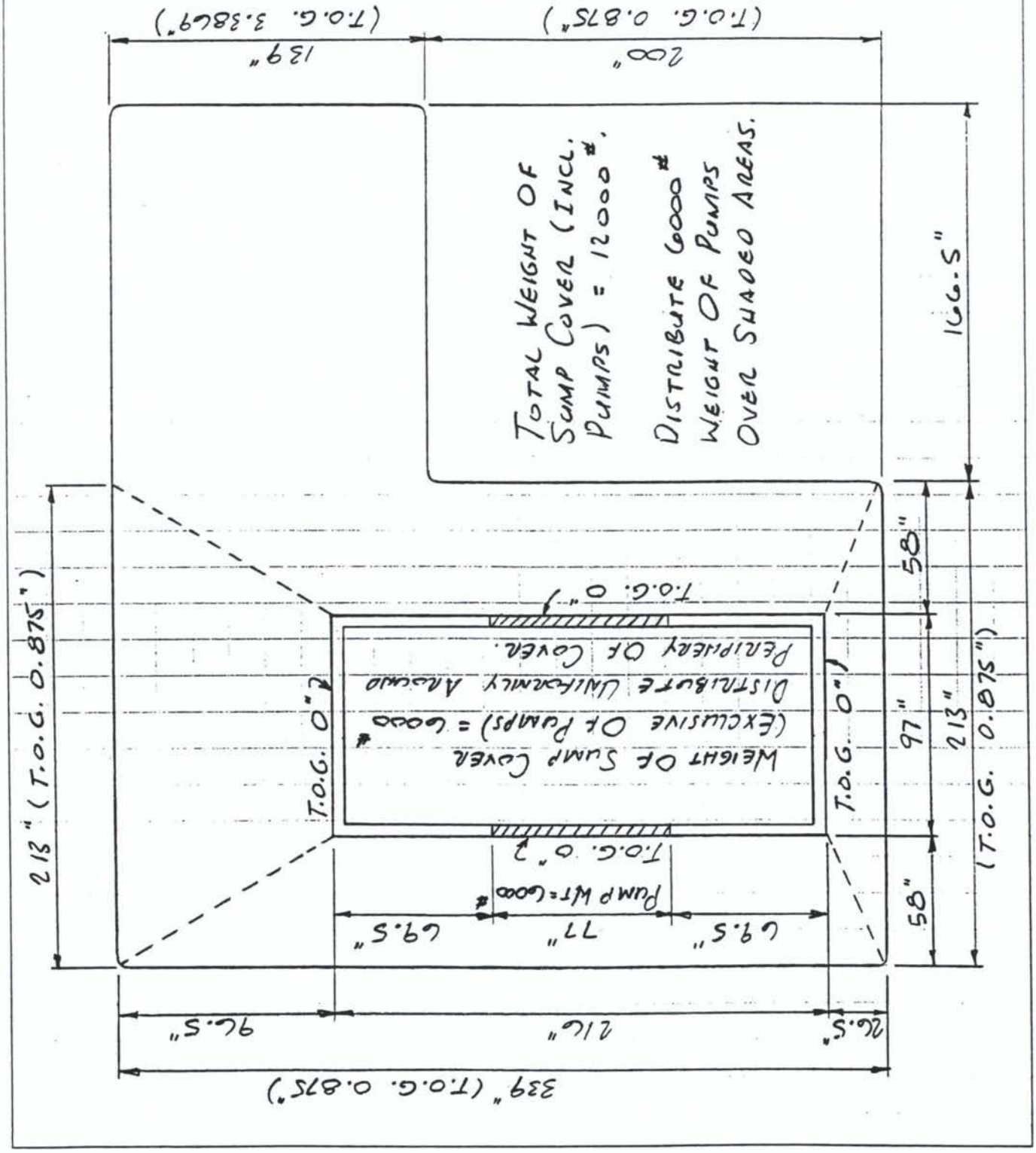

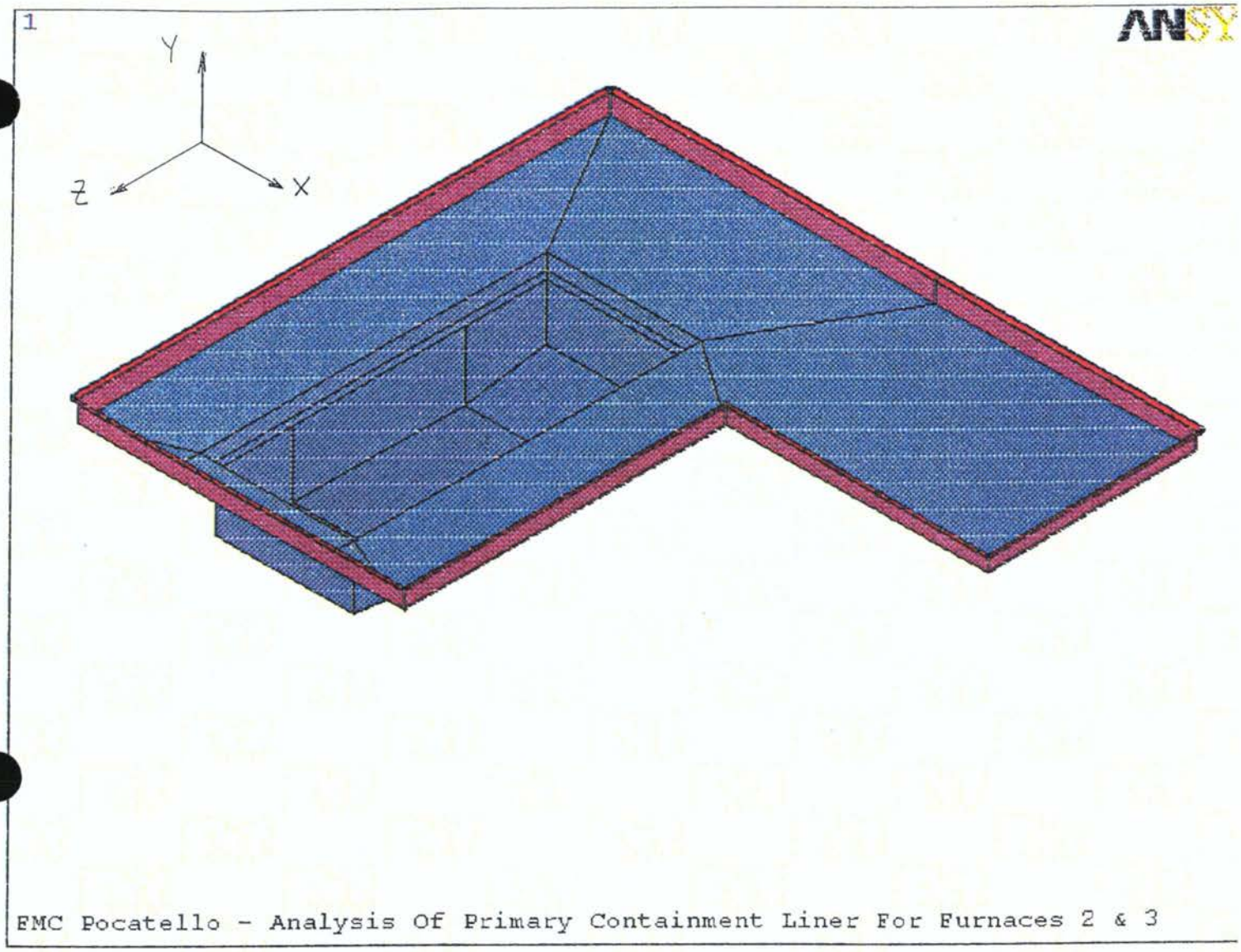

EMC Pocatello - Analysis Of Primary Containment Liner For Furnaces 2 & 3

NOTE : INPUT & OUTPUT UNITS : pounds, inches, seconds

1

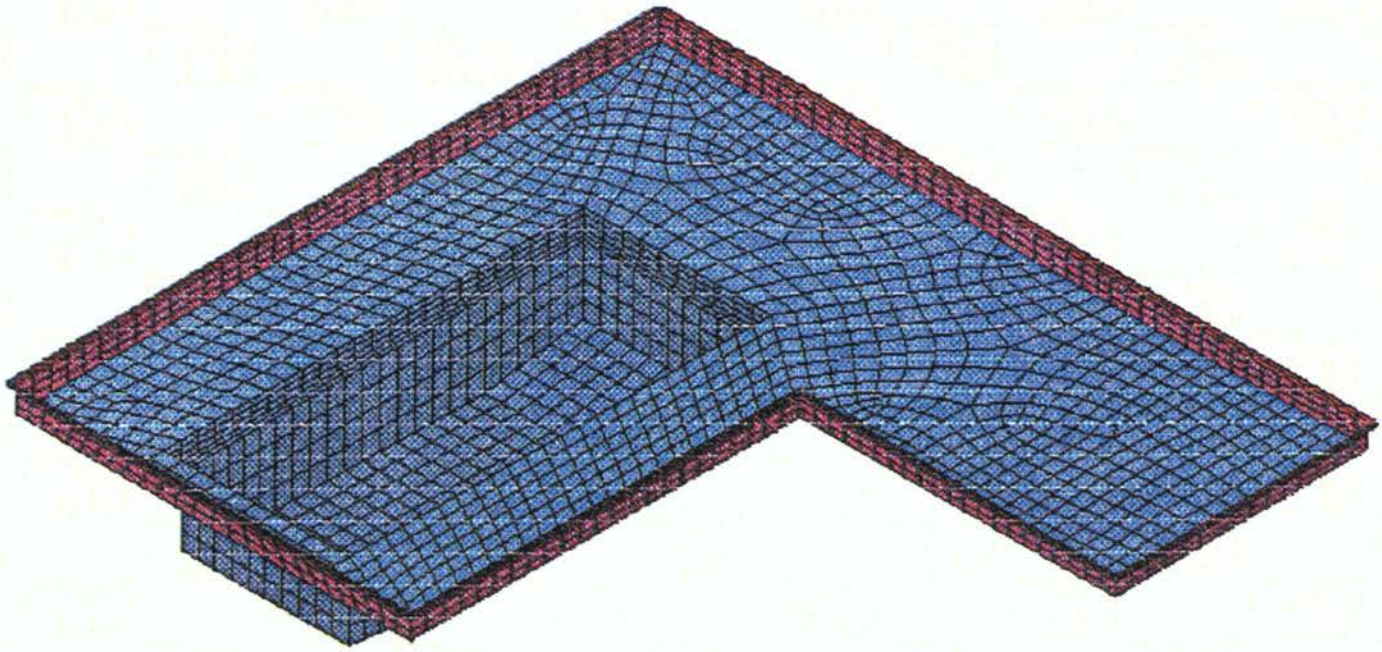

FMC Pocatello - Analysis Of Primary Containment Liner For Furnaces 2 & 3

DEAD LOAD

***** SUMMATION OF TOTAL FORCES AND MOMENTS IN GLOBAL COORDINATES *****

FX = -0.5566849E-09
FY = -21180.96
FZ = 0.4585121E-09
MX = 3890003.
= -11890.06
= -2379002.

SUMMATION POINT= 0.0000 0.0000 0.0000

DL + TEMP #1

```
***** SUMMATION OF TOTAL    FORCES AND MOMENTS IN GLOBAL COORDINATES *****
 FX  = -0.3275162E-07
 FY  =  -21180.96
 FZ  =  0.1796100E-07
 MX  =   3084745.
     =  -845373.0
     =  -2684546.

SUMMATION POINT=  0.0000       0.0000       0.0000
```

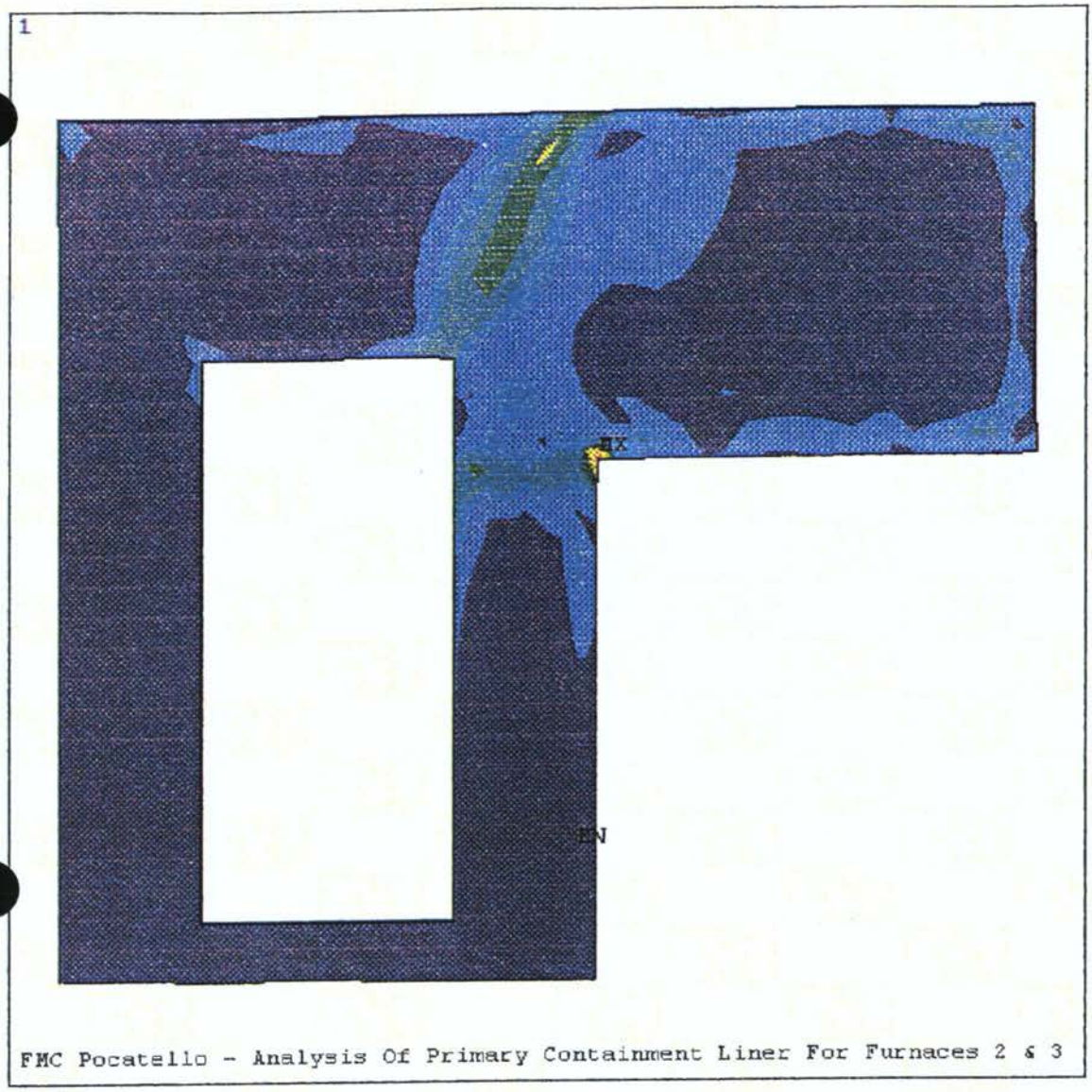

FMC Pocatello - Analysis Of Primary Containment Liner For Furnaces 2 & 3

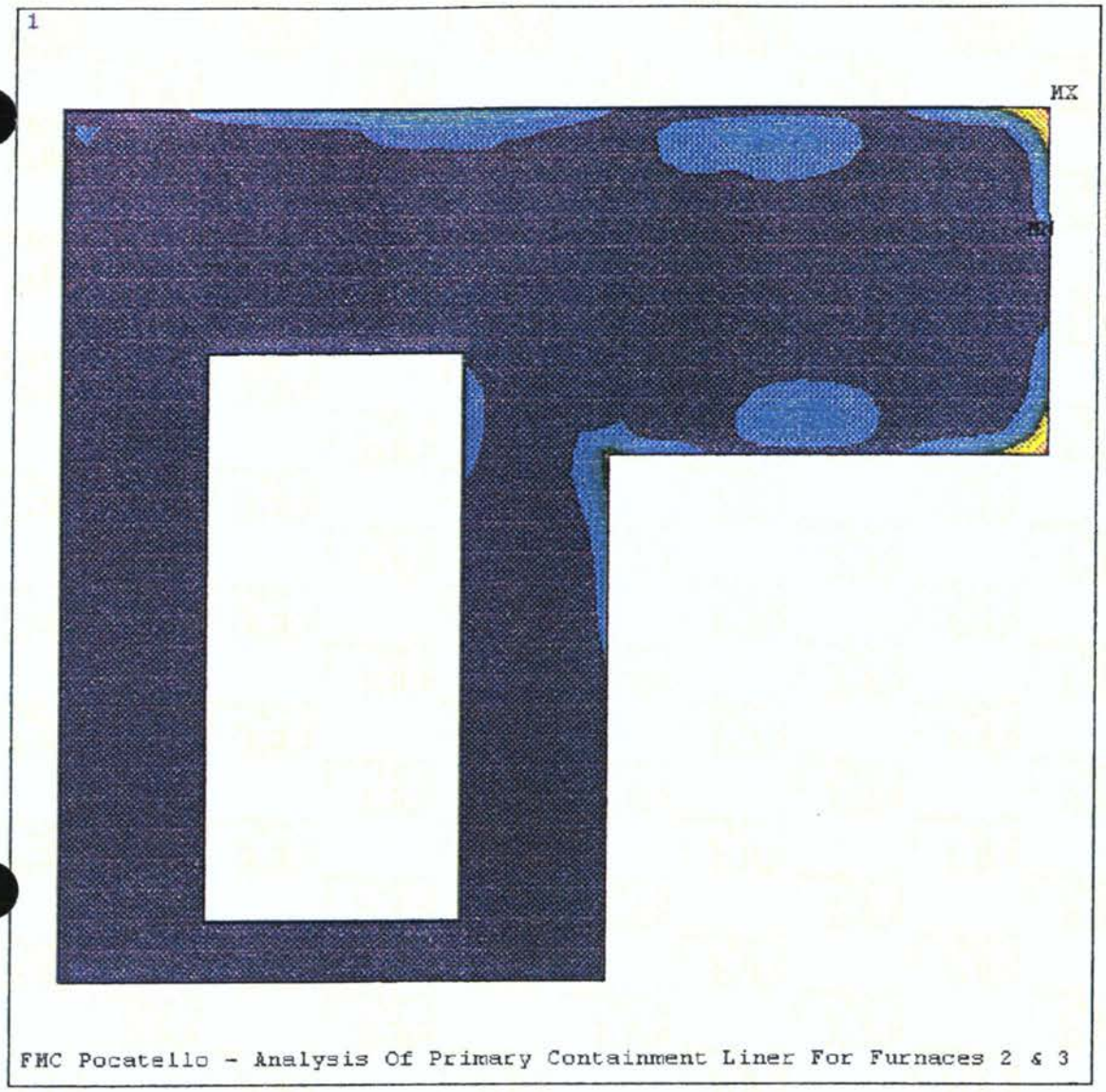

FMC Pocatello - Analysis Of Primary Containment Liner For Furnaces 2 & 3

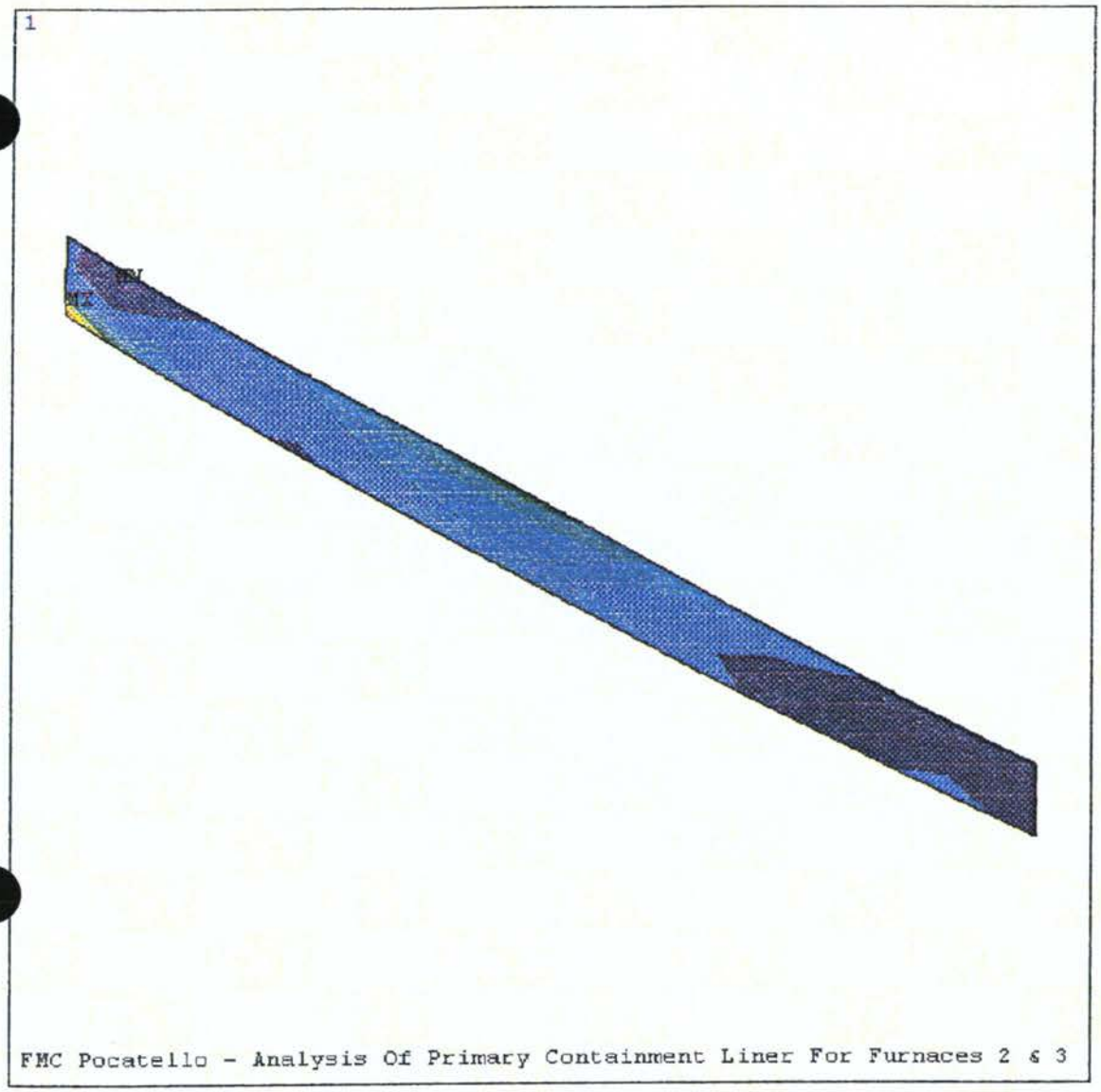

FMC Pocatello - Analysis Of Primary Containment Liner For Furnaces 2 & 3

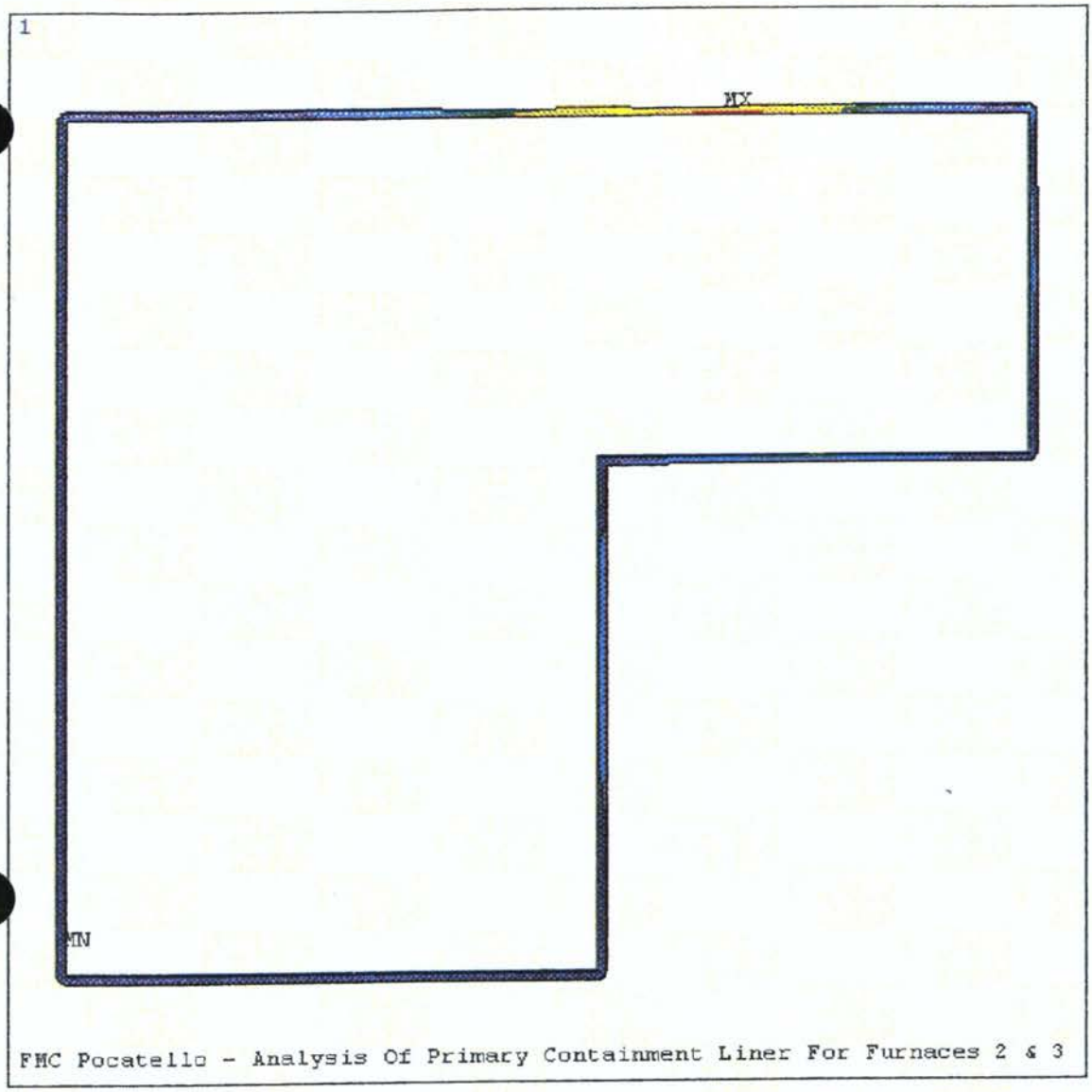

FMC Pocatello - Analysis Of Primary Containment Liner For Furnaces 2 & 3

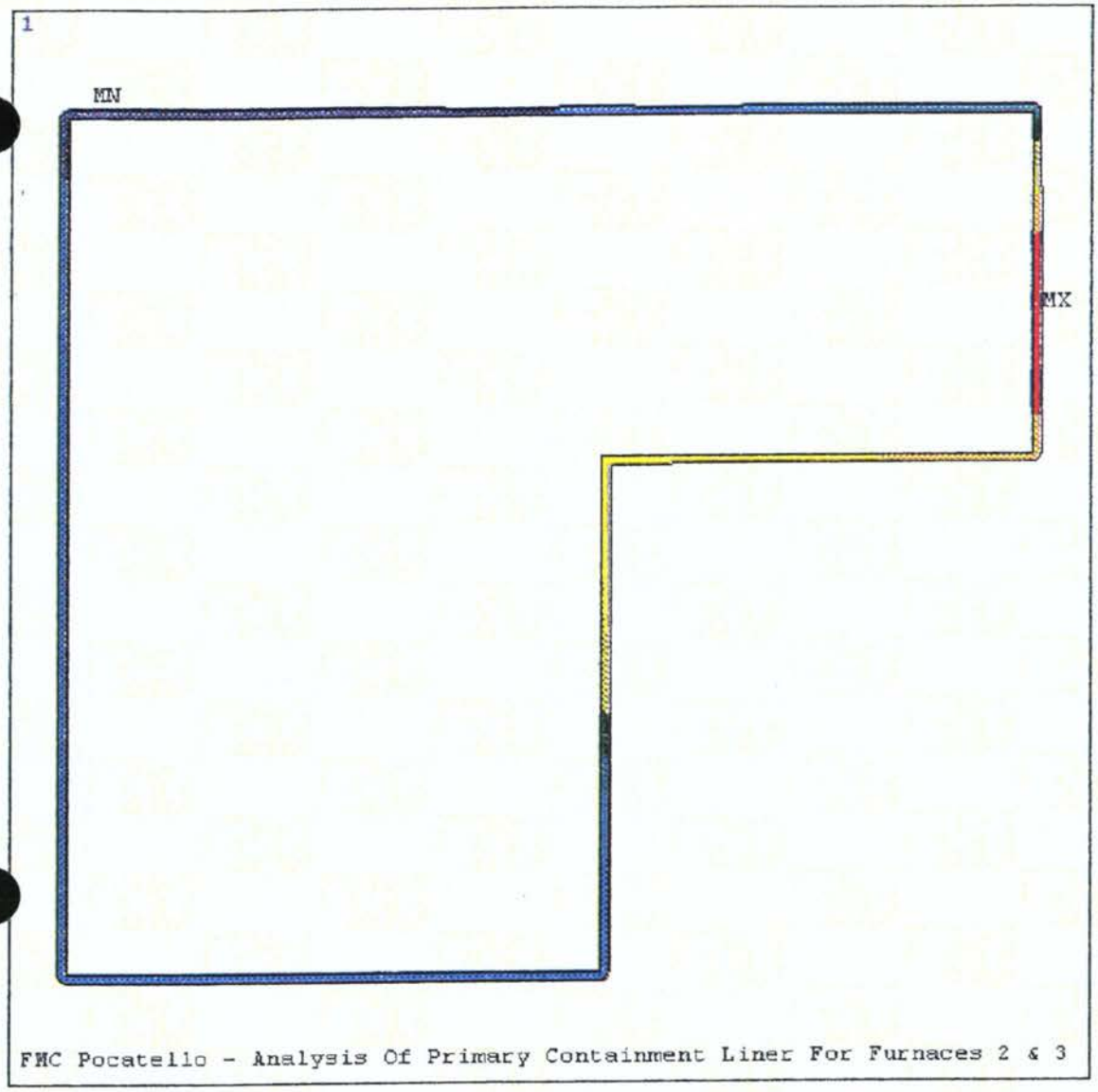

FMC Pocatello - Analysis Of Primary Containment Liner For Furnaces 2 & 3

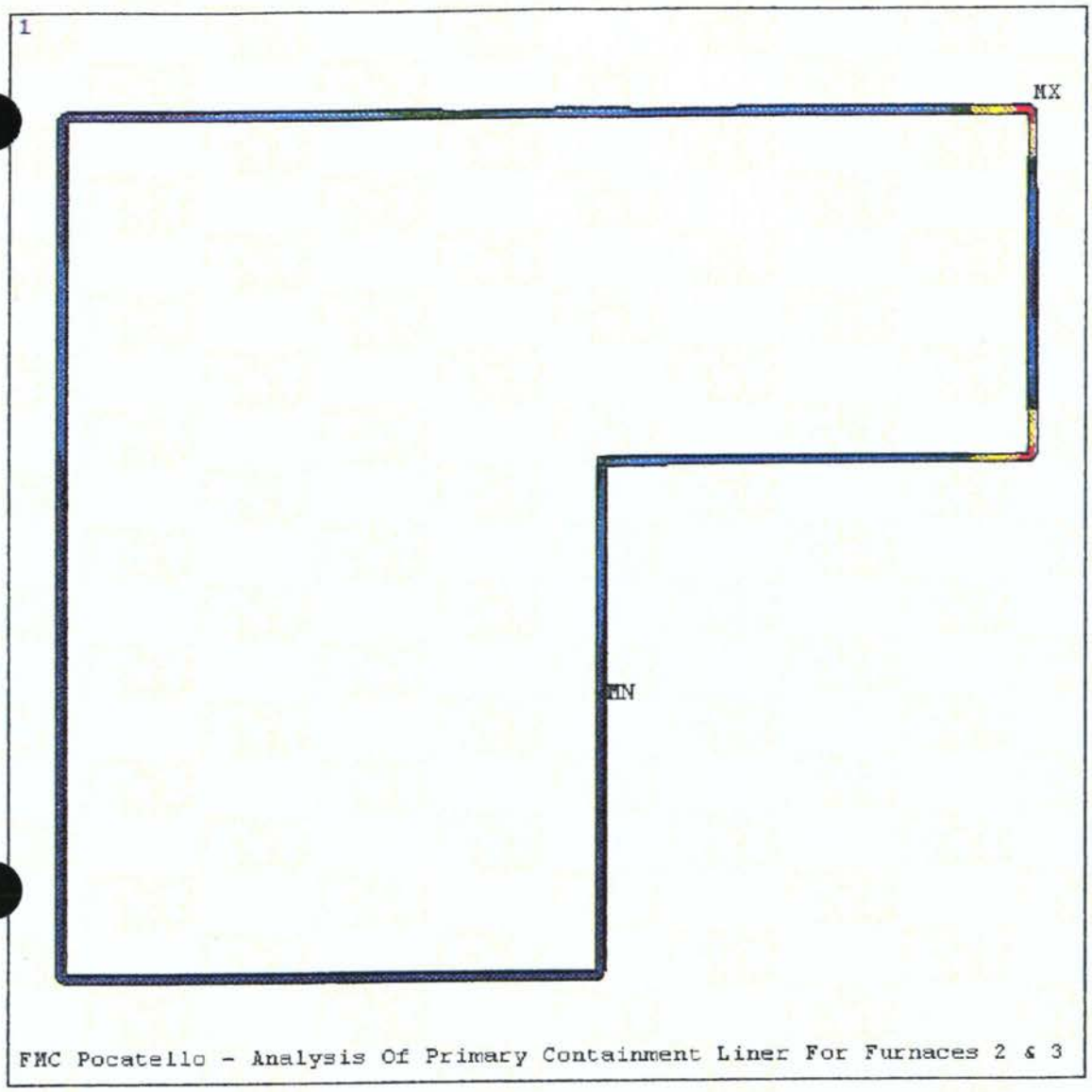
1
MX
MN
ANSYS 5.5.1SP
MAR 4 1999
08:41:03
NODAL SOLUTION
STEP=2
SUB =999999
TIME=2
UY
BOTTOM
RSYS=0
DMX =.476306
SEPC=8.767
SMN =-.031277
SMX =.348801
-.031277
.010954
.053185
.095416
.137647
.179878
.222108
.264339
.30657
.348801
FMC Pocatello - Analysis Of Primary Containment Liner For Furnaces 2 & 3

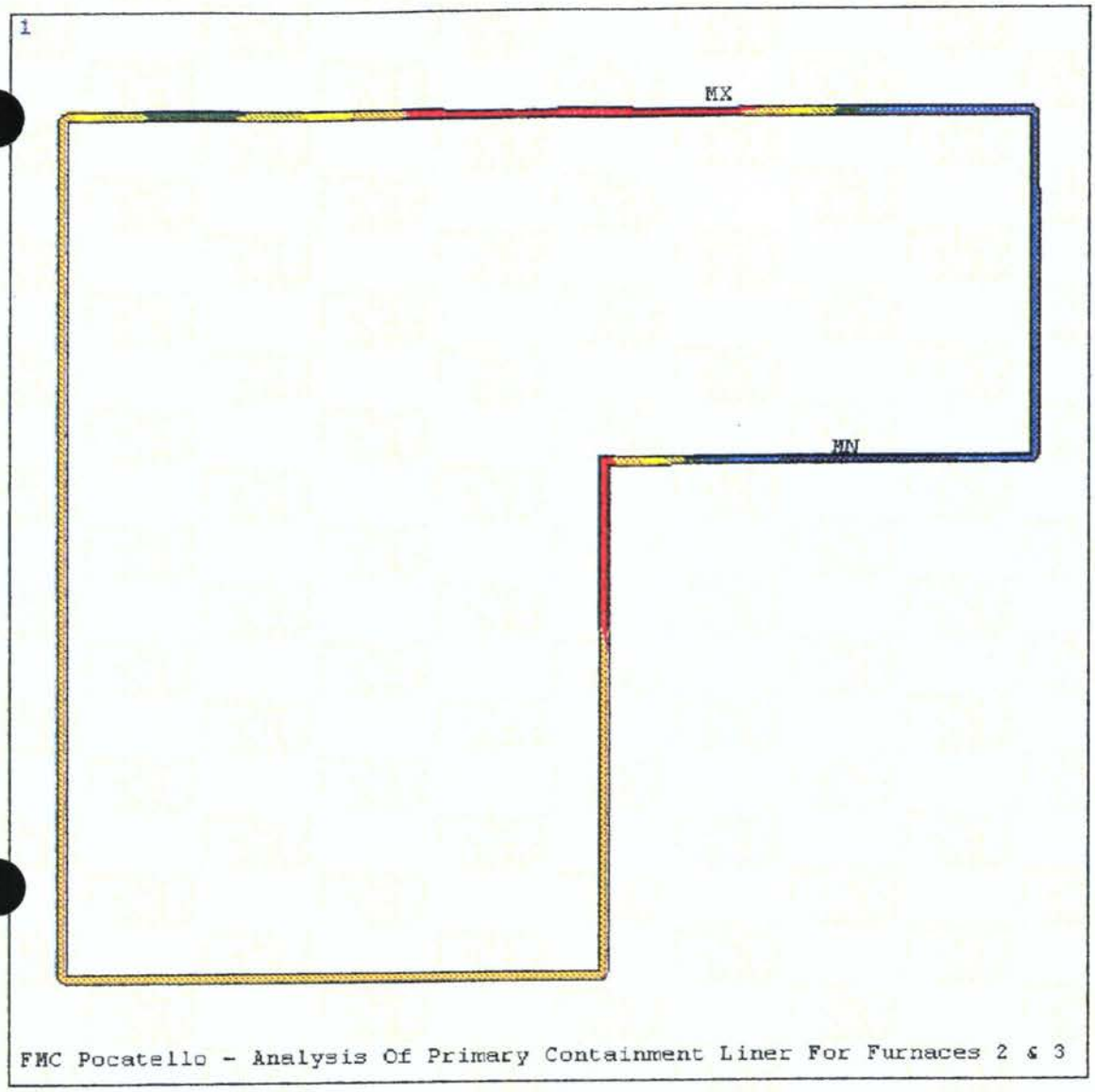

FMC Pocatello - Analysis Of Primary Containment Liner For Furnaces 2 & 3

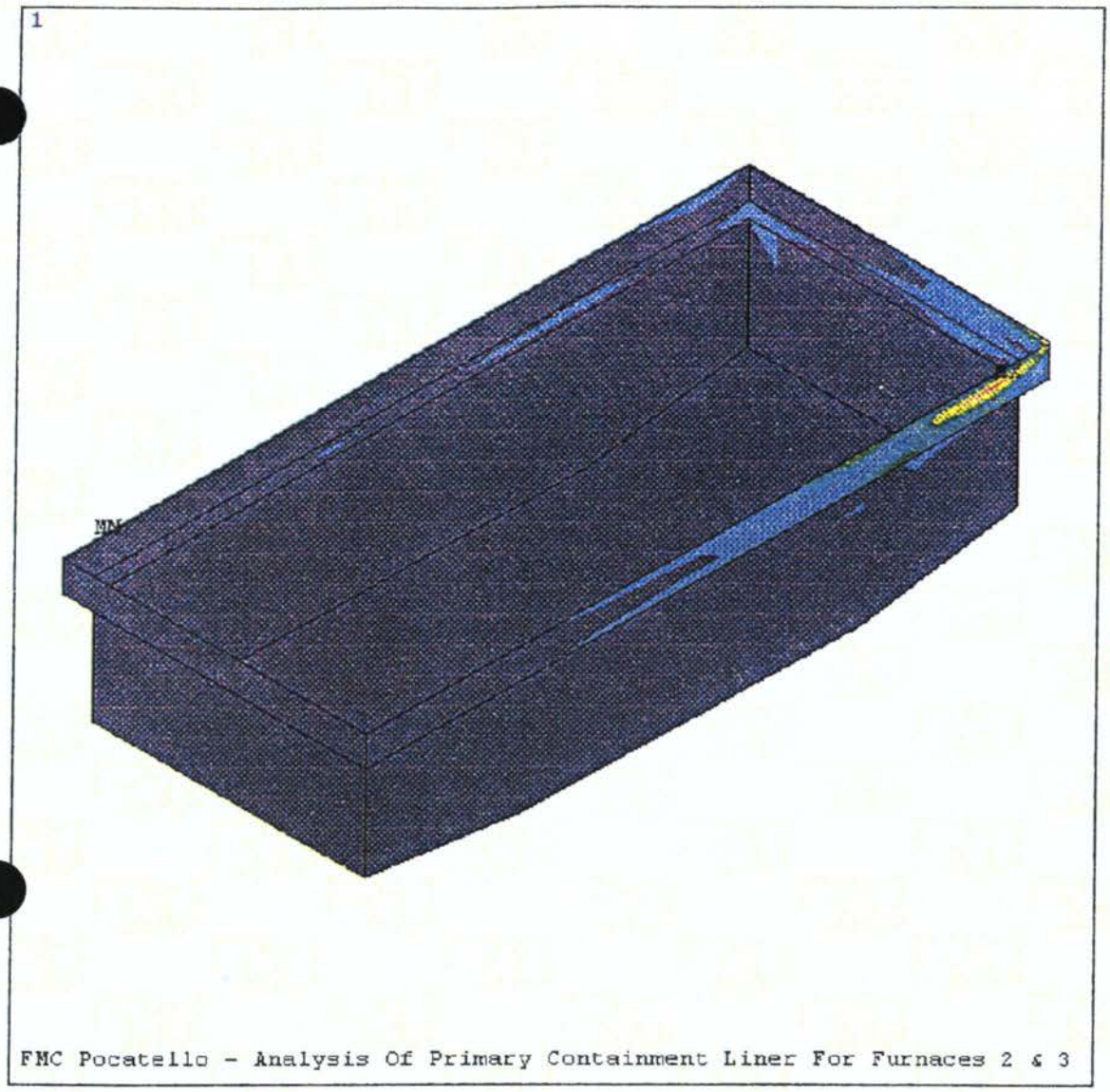

FMC Pocatello - Analysis Of Primary Containment Liner For Furnaces 2 & 3

DL + TEMP #2

```
***** SUMMATION OF TOTAL    FORCES AND MOMENTS IN GLOBAL COORDINATES *****
 FX  = -0.1666822E-07
 FY  =  -21180.96
 FZ  = -0.1586320E-07
 MX  =   2725522.
 MY  =  -1006439.
 MZ  =  -2879957.

SUMMATION POINT=  0.0000      0.0000      0.0000
```

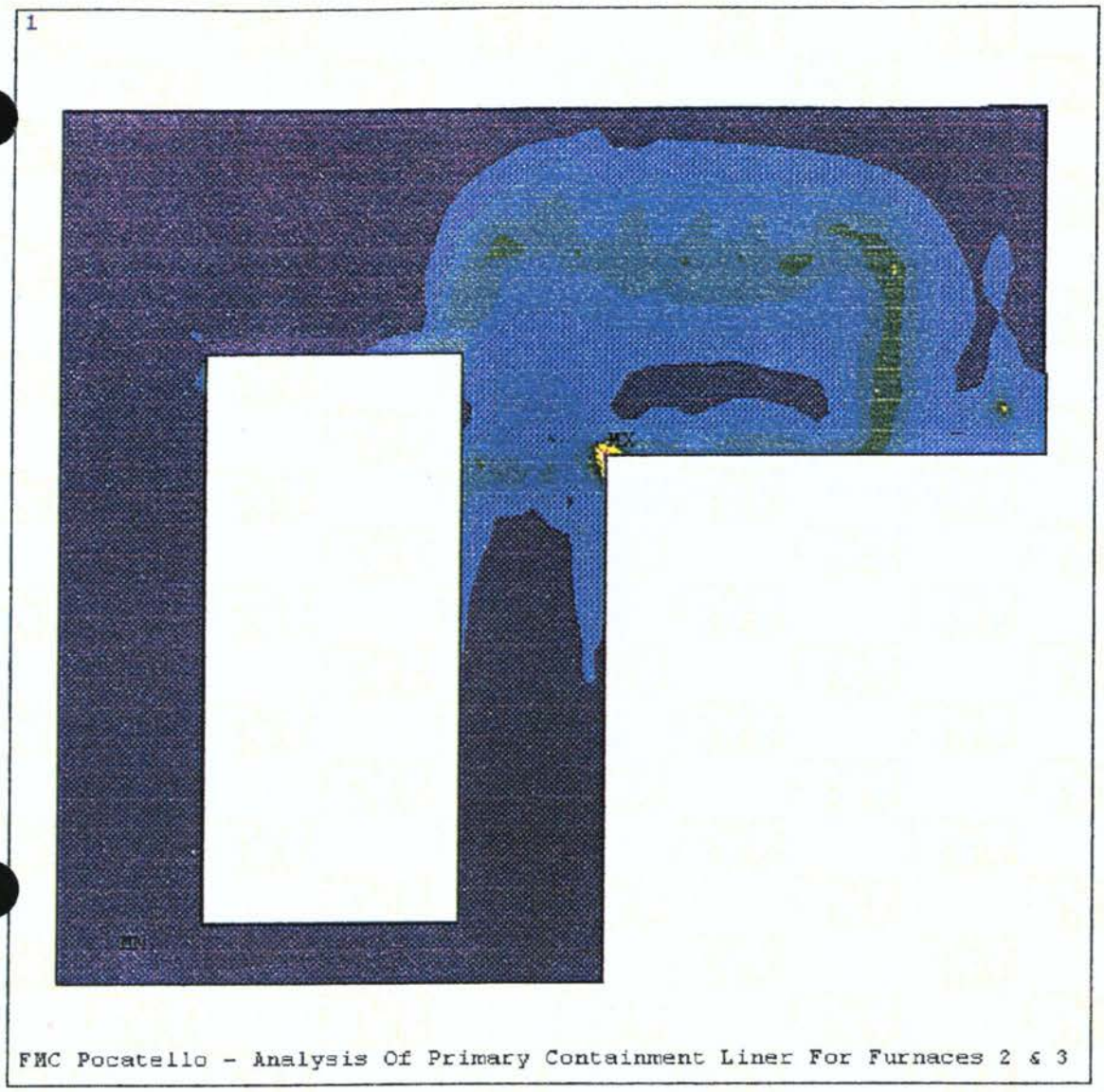

FMC Pocatello - Analysis Of Primary Containment Liner For Furnaces 2 & 3

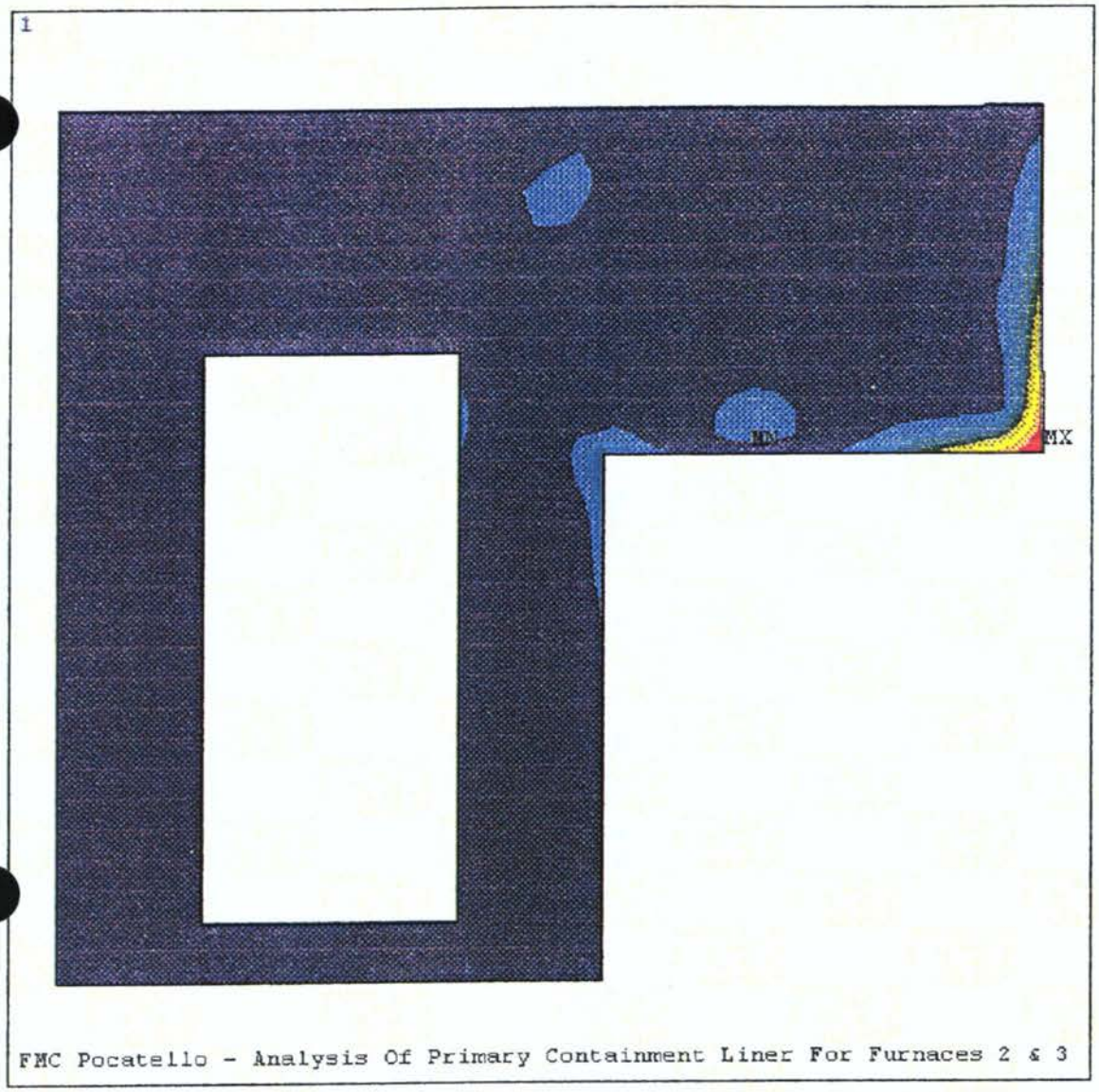

FMC Pocatello - Analysis Of Primary Containment Liner For Furnaces 2 & 3

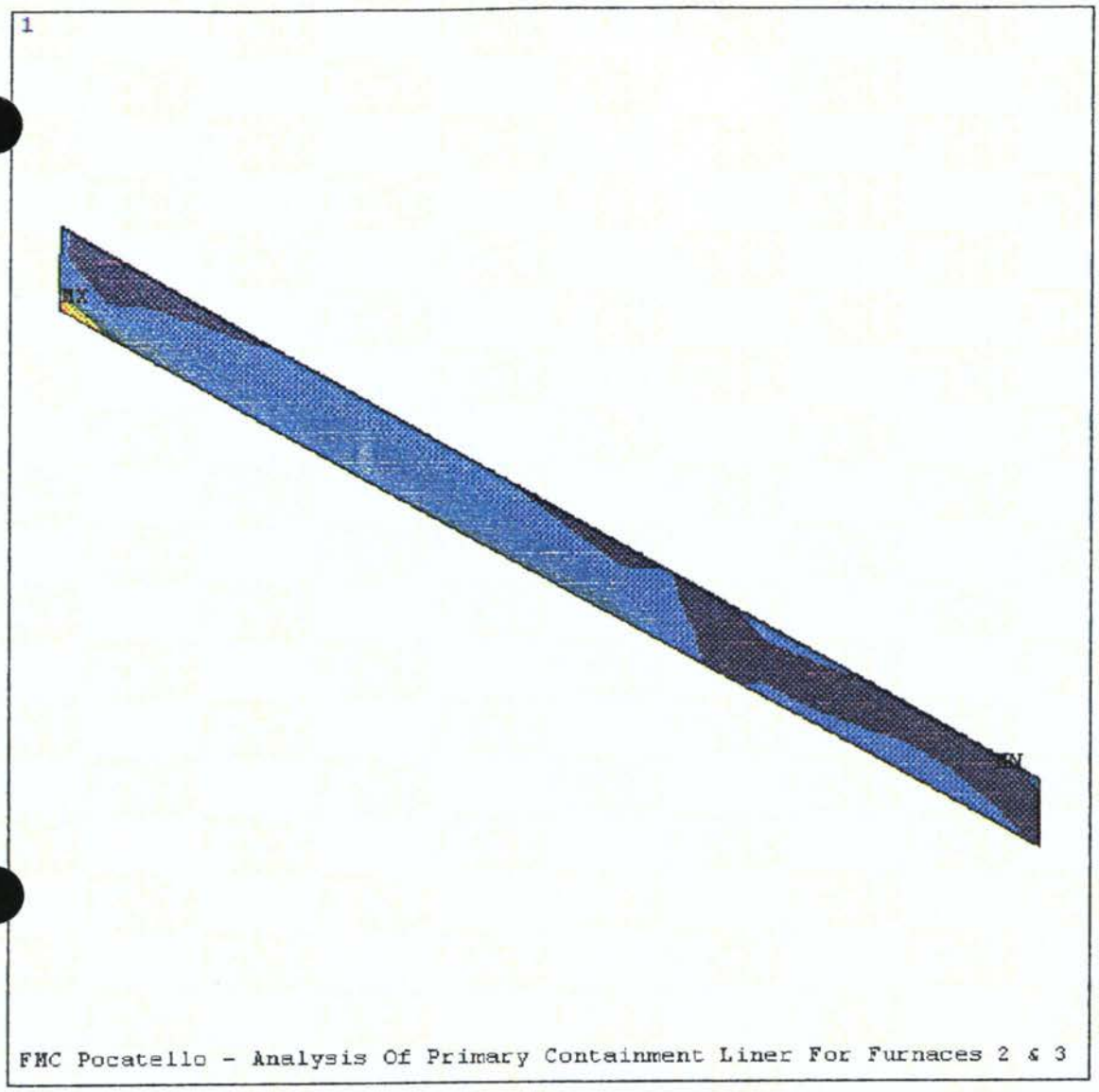

FMC Pocatello - Analysis Of Primary Containment Liner For Furnaces 2 & 3

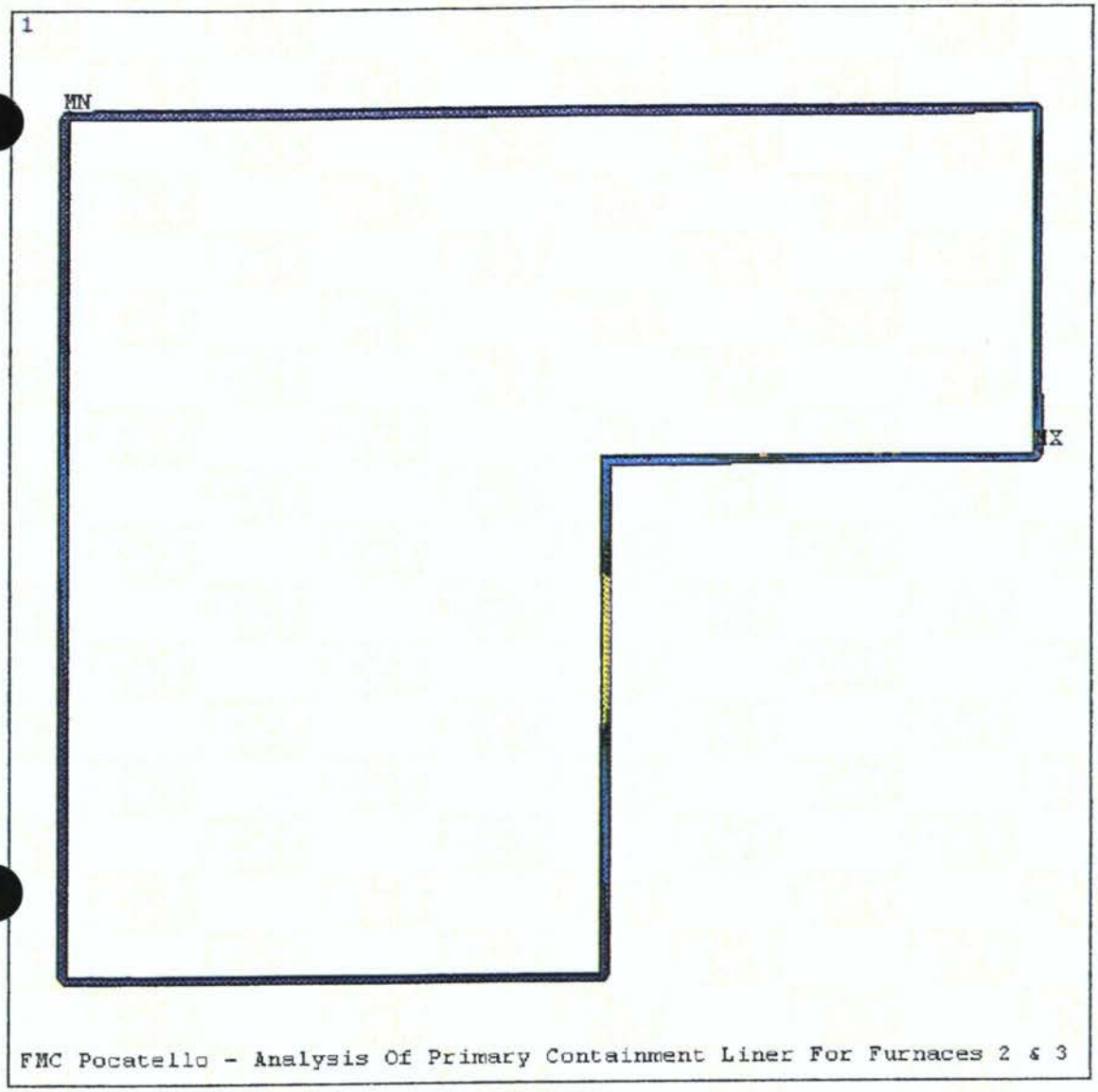

FMC Pocatello - Analysis Of Primary Containment Liner For Furnaces 2 & 3

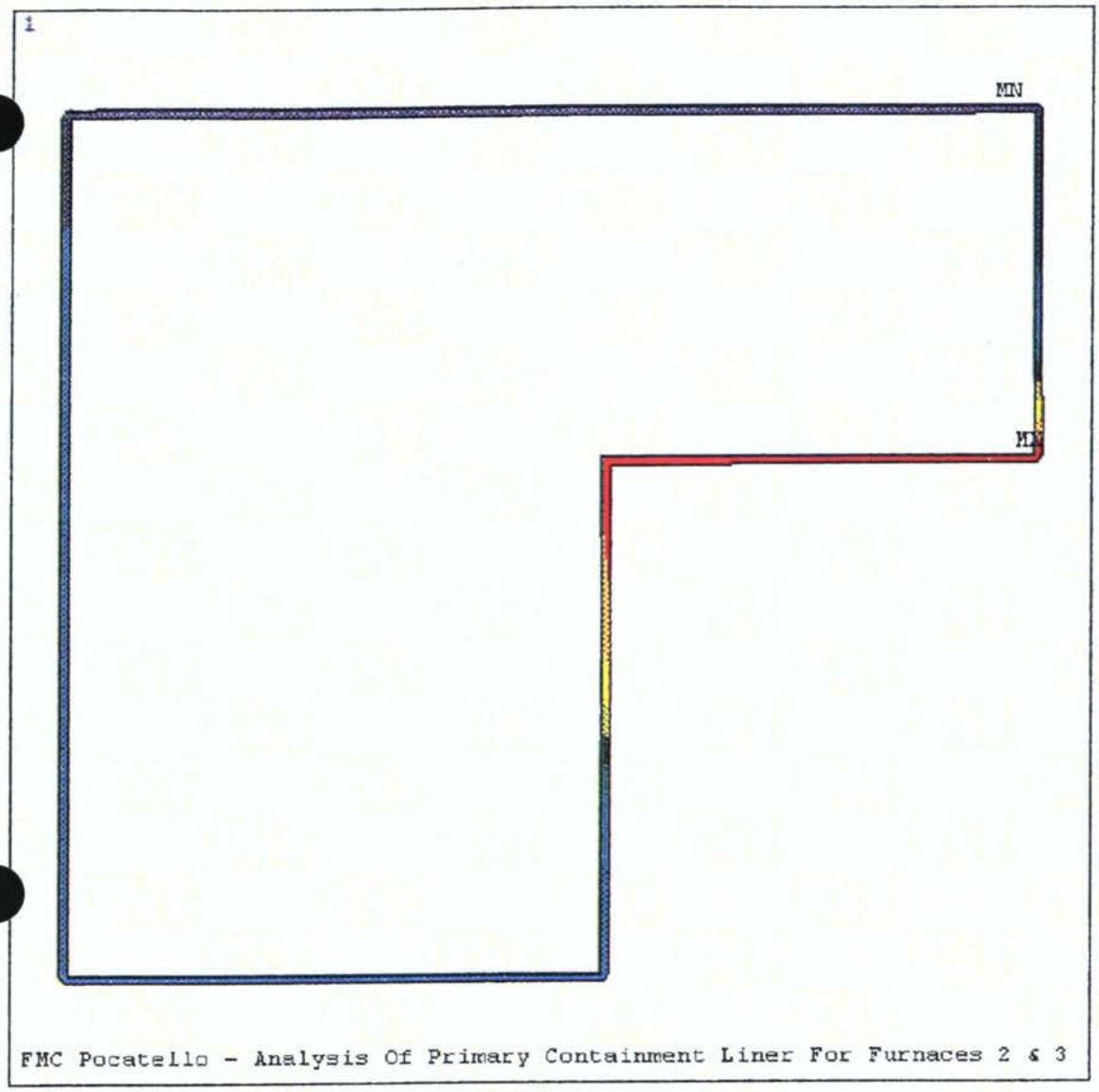
1
MN
MX
ANSYS 5.5.1SP
MAR 4 1999
09:47:08
NODAL SOLUTION
STEP=2
SUB =999999
TIME=2
UX
BOTTOM
RSYS=0
DMX =.7756
SEPC=26.596
SMN =-.050243
SMX =.210176
-.050243
-.021308
.007628
.036563
.065499
.094434
.12337
.152305
.181241
.210176
FMC Pocatello - Analysis Of Primary Containment Liner For Furnaces 2 & 3

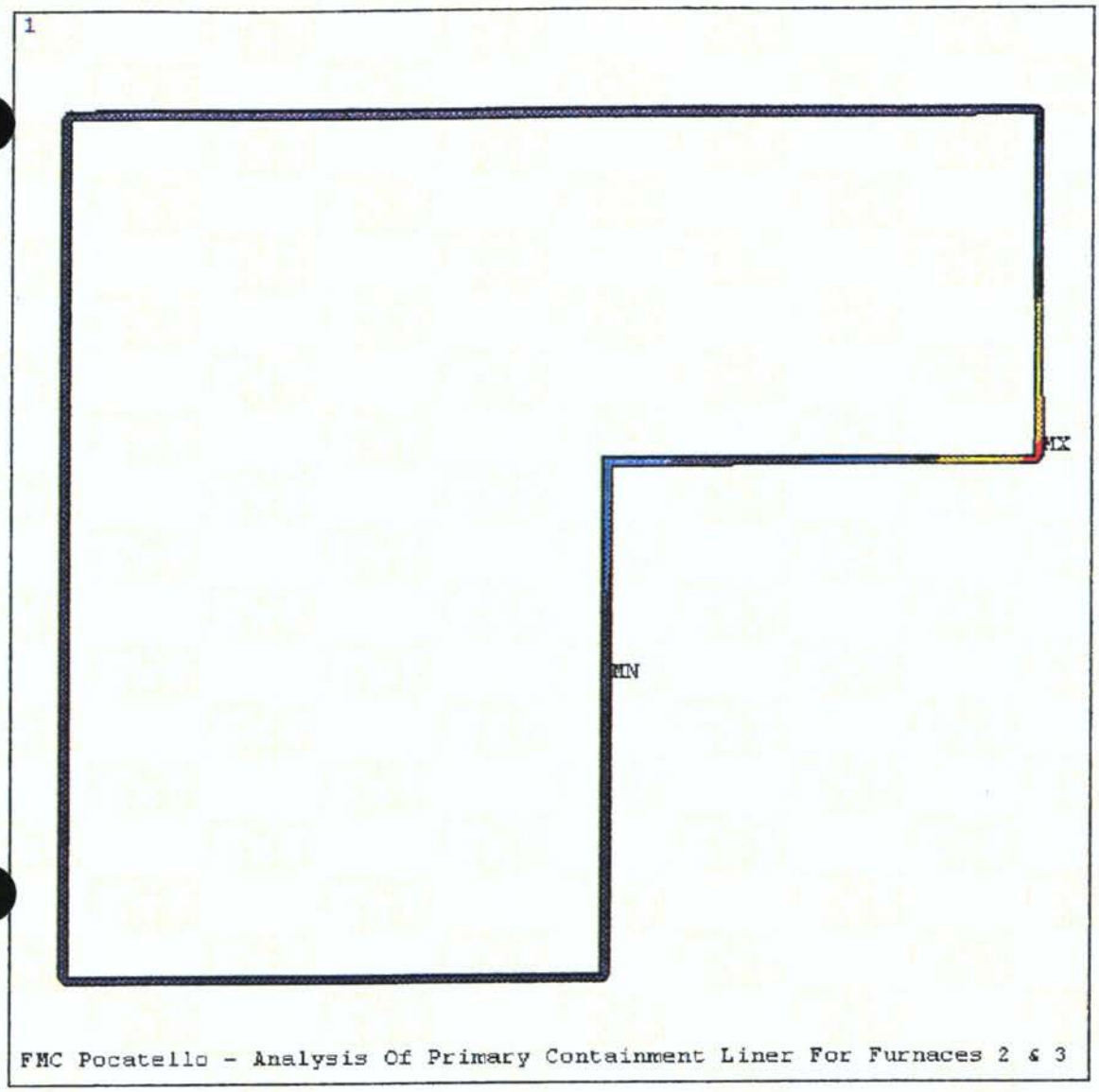
1
MX
MN
ANSYS 5.5.1SP
MAR 4 1999
09:47:23
NODAL SOLUTION
STEP=2
SUB =999999
TIME=2
UY
BOTTOM
RSYS=0
DMX =.7756
SEPC=26.596
SMN =-.026208
SMX =.586668
-.026208
.041889
.109987
.178084
.246181
.314279
.382376
.450473
.51857
.586668
FMC Pocatello - Analysis Of Primary Containment Liner For Furnaces 2 & 3

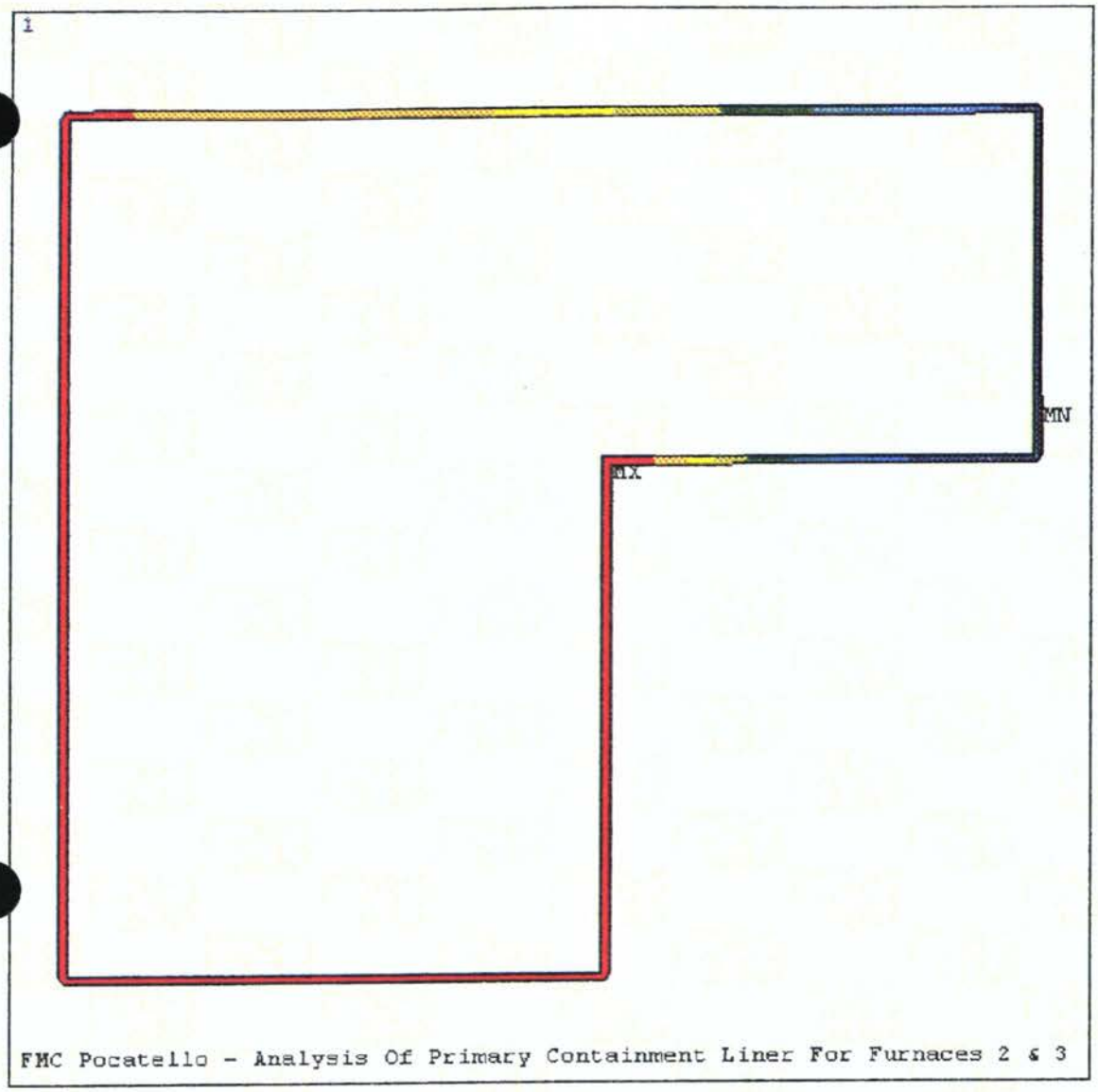

FMC Pocatello - Analysis Of Primary Containment Liner For Furnaces 2 & 3

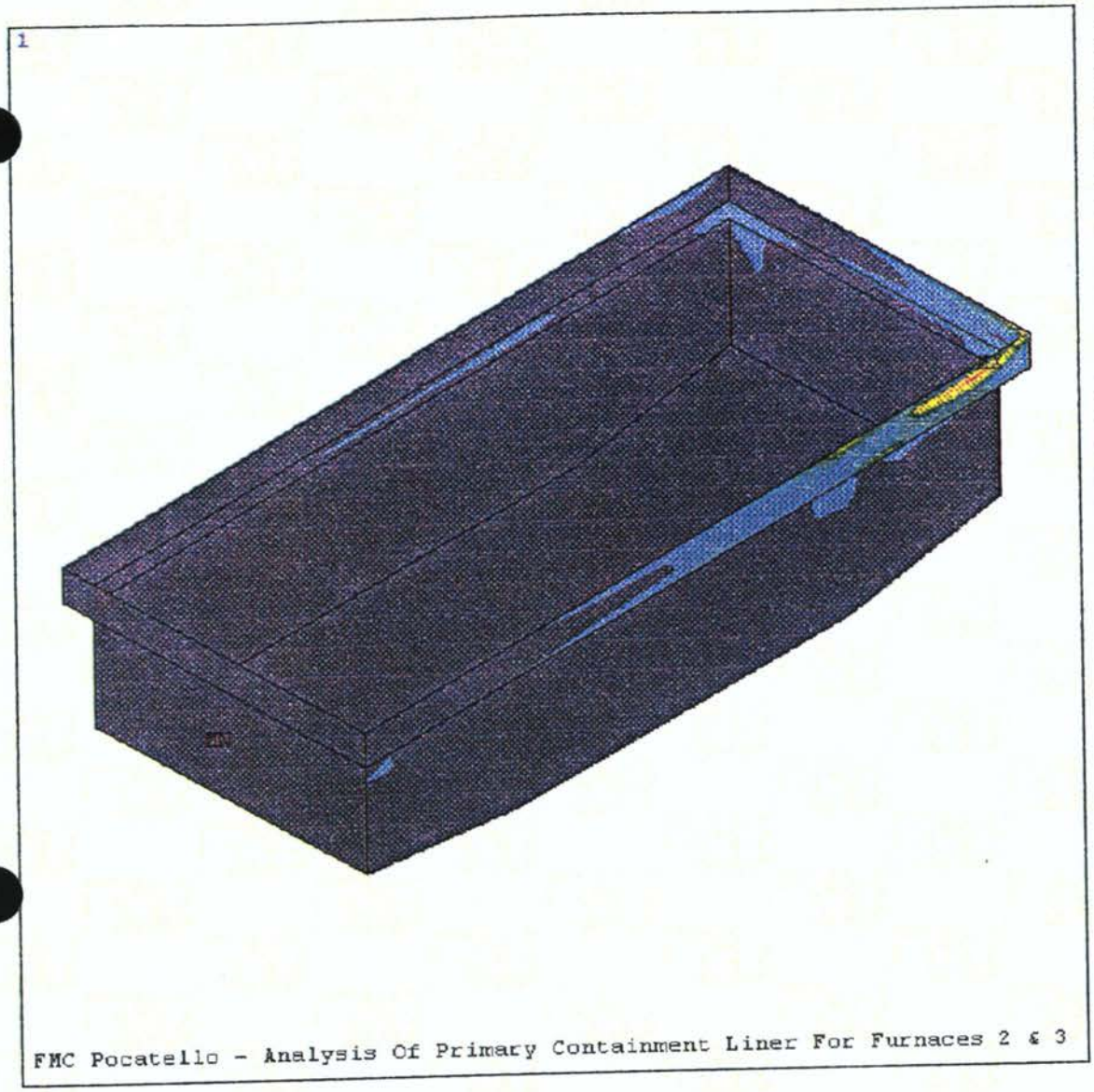

FMC Pocatello - Analysis Of Primary Containment Liner For Furnaces 2 & 3

DL + TEMP #3

***** SUMMATION OF TOTAL FORCES AND MOMENTS IN GLOBAL COORDINATES *****

FX = -0.3766330E-07
FY = -21180.96
FZ = 0.4361121E-07
MX = 3519372.
= -0.4906133E+08
= 5803274.

SUMMATION POINT= 0.0000 0.0000 0.0000

1

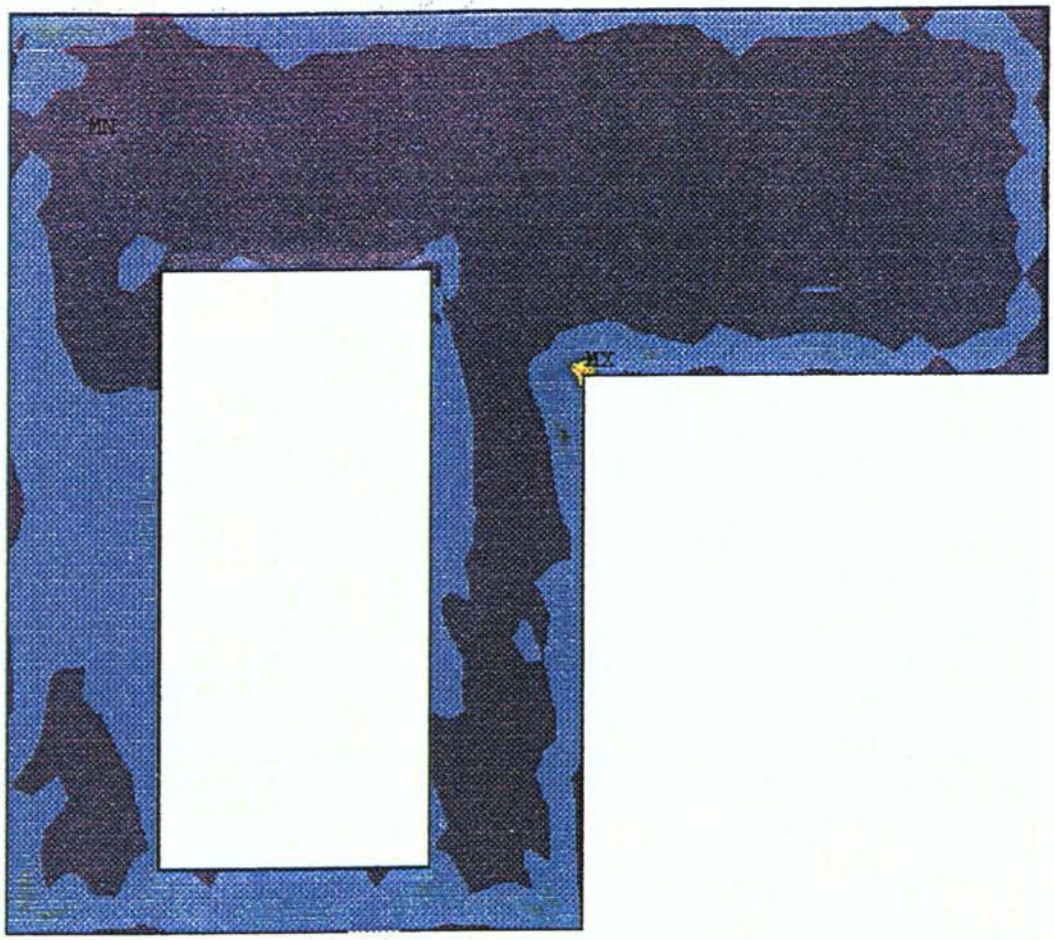

ANSYS 5.5.1SP
MAR 4 1999
10:32:18
NODAL SOLUTION
STEP=2
SUB =999999
TIME=2
SEQV (AVG)
BOTTOM
DMX =.533571
SMN =114.535
SMX =35241
SMXB=45963

114.535
4018
7920
11823
15726
19629
23532
27435
31338
35241

FMC Pocatello - Analysis Of Primary Containment Liner For Furnaces 2 & 3

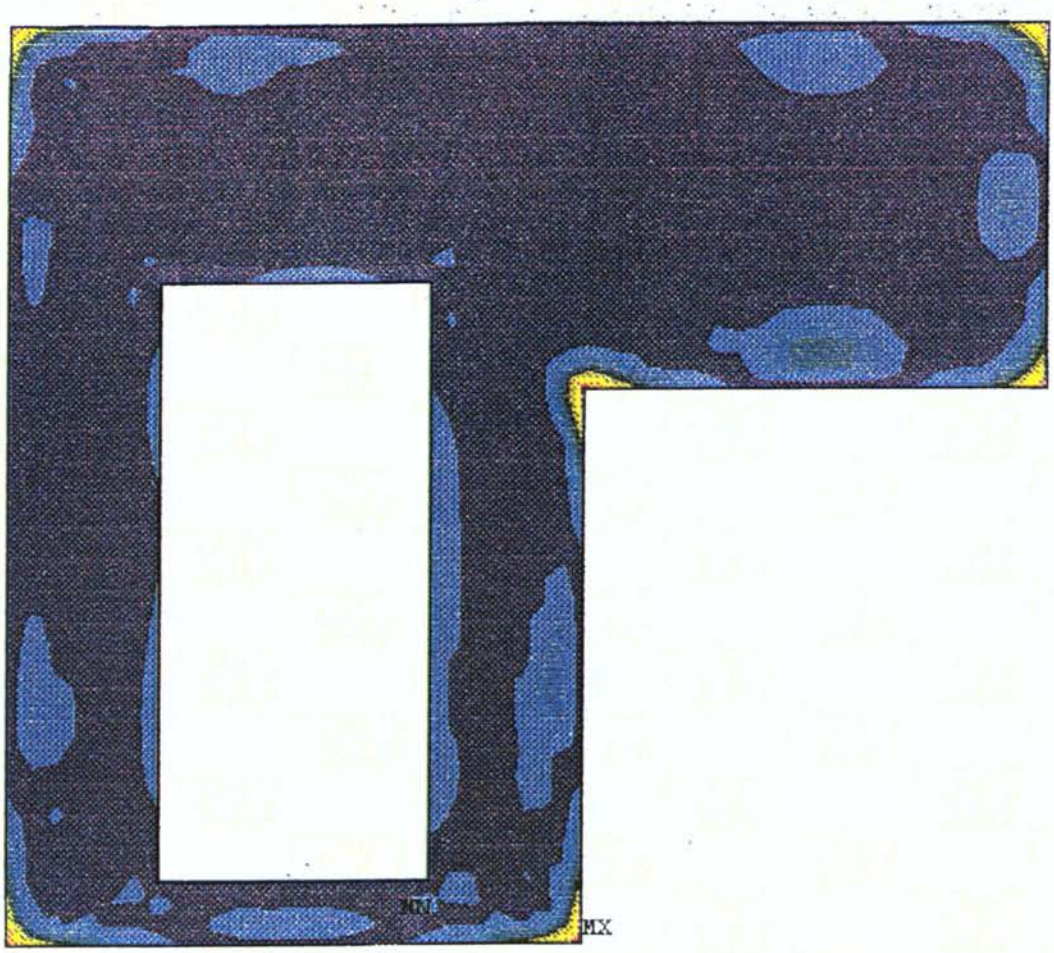

ANSYS 5.5.1SP
MAR 4 1999
10:32:39
NODAL SOLUTION
STEP=2
SUB =999999
TIME=2
UY
BOTTOM
RSYS=0
DMX =.533571
SEPC=26.135
SMN =-.025636
SMX =.313875

-.025636
.012088
.049811
.087535
.125258
.162982
.200705
.238428
.276152
.313875

FMC Pocatello - Analysis Of Primary Containment Liner For Furnaces 2 & 3

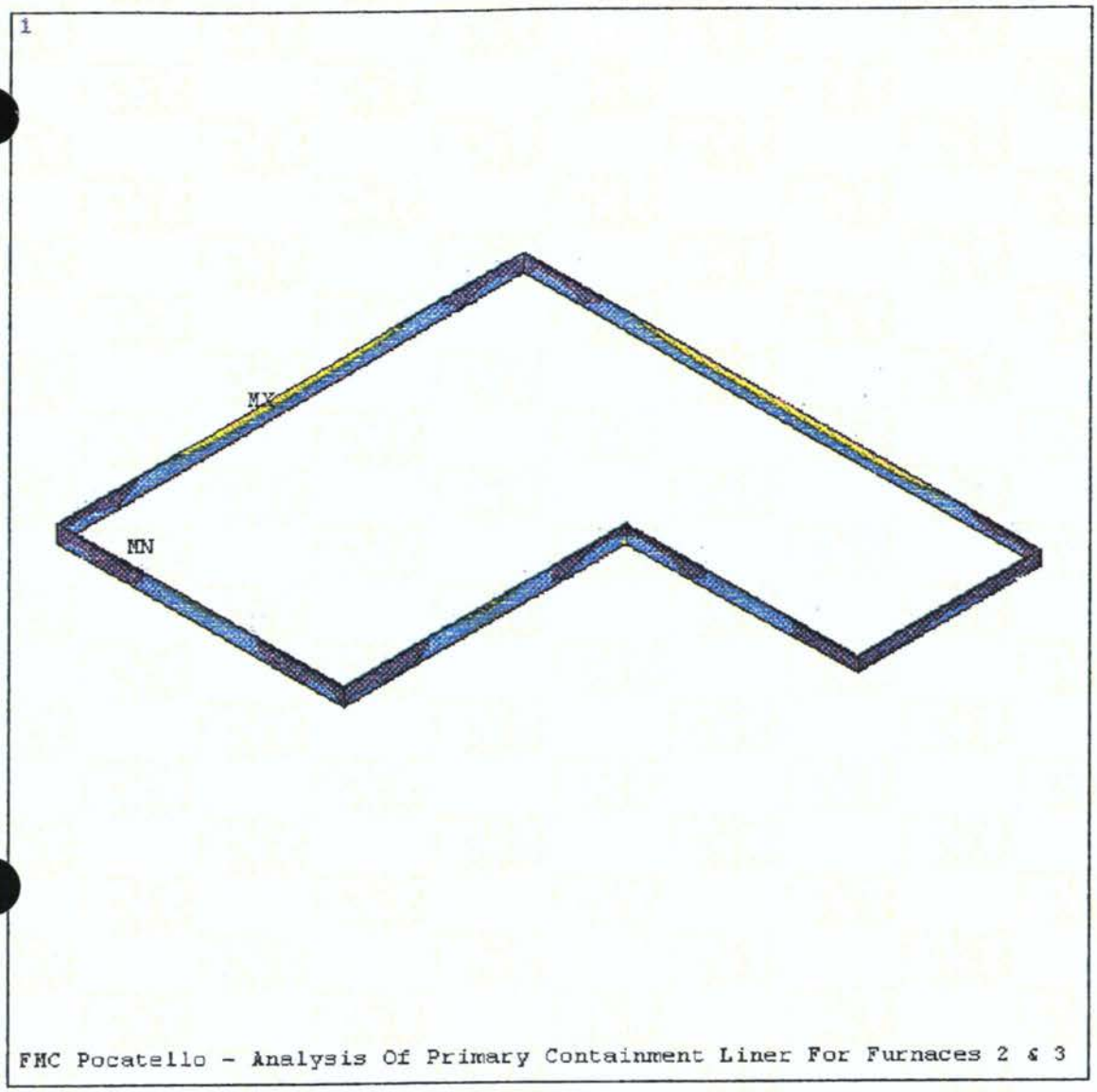

FMC Pocatello - Analysis Of Primary Containment Liner For Furnaces 2 & 3

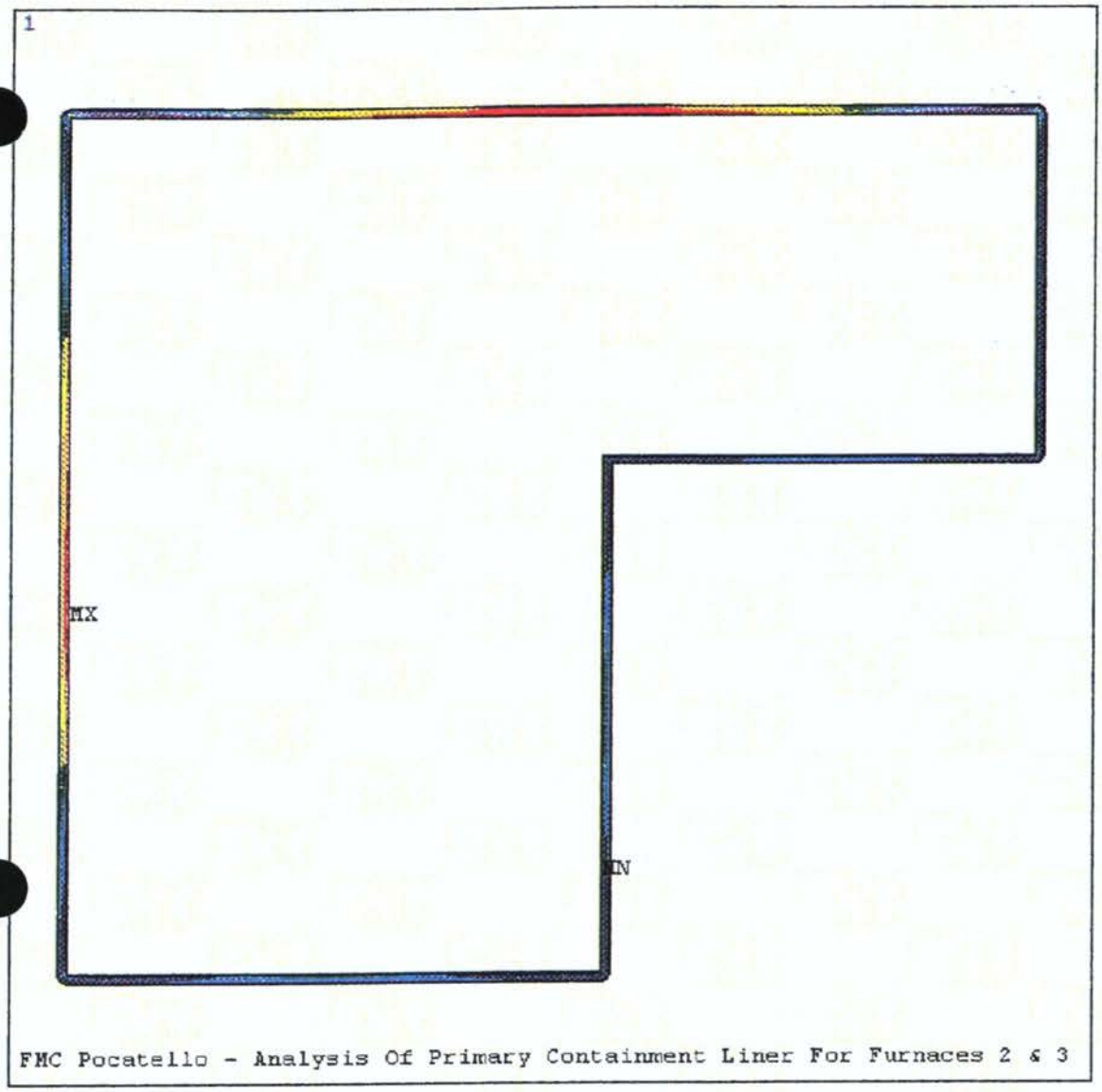

FMC Pocatello - Analysis Of Primary Containment Liner For Furnaces 2 & 3

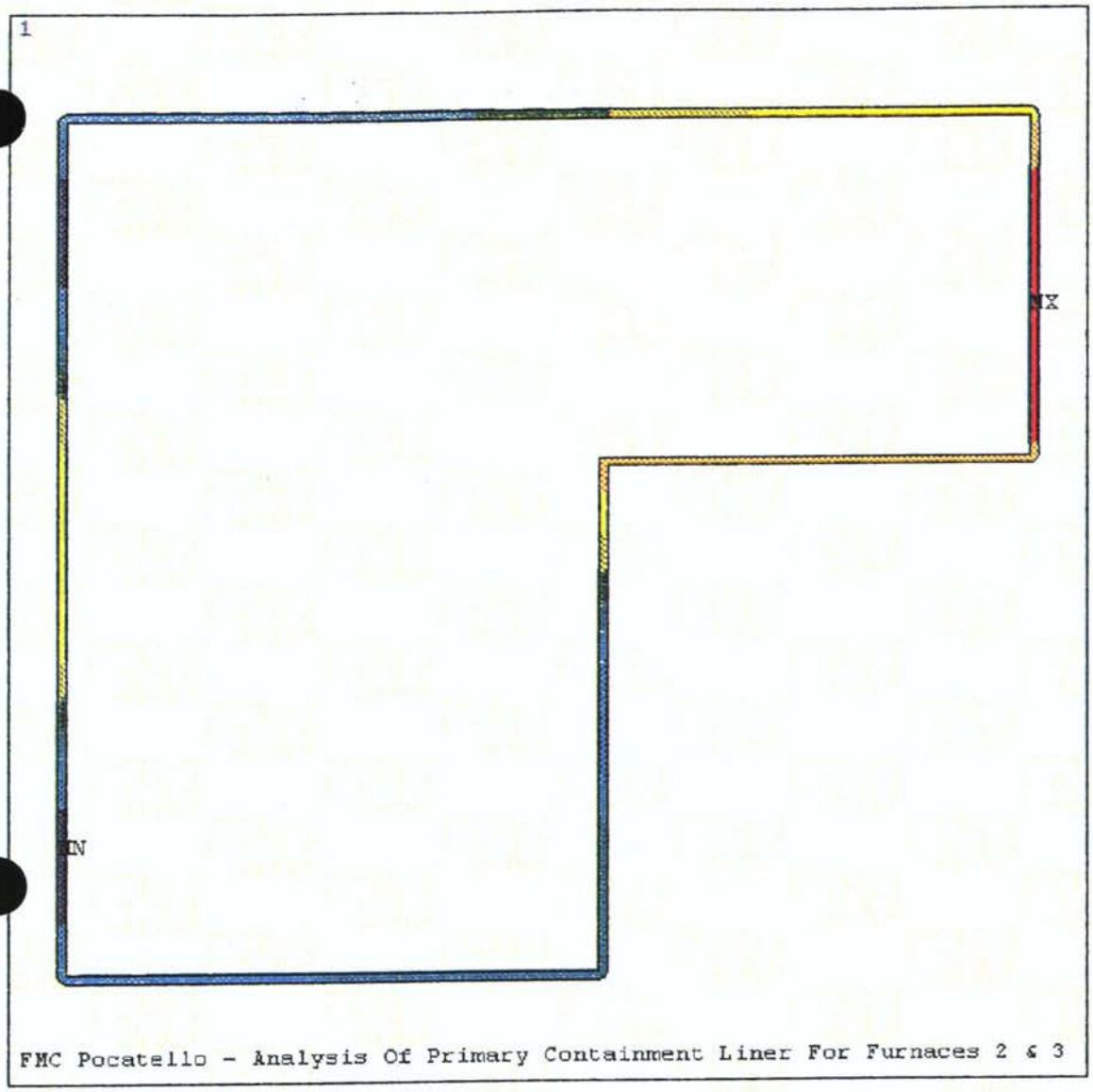

FMC Pocatello - Analysis Of Primary Containment Liner For Furnaces 2 & 3

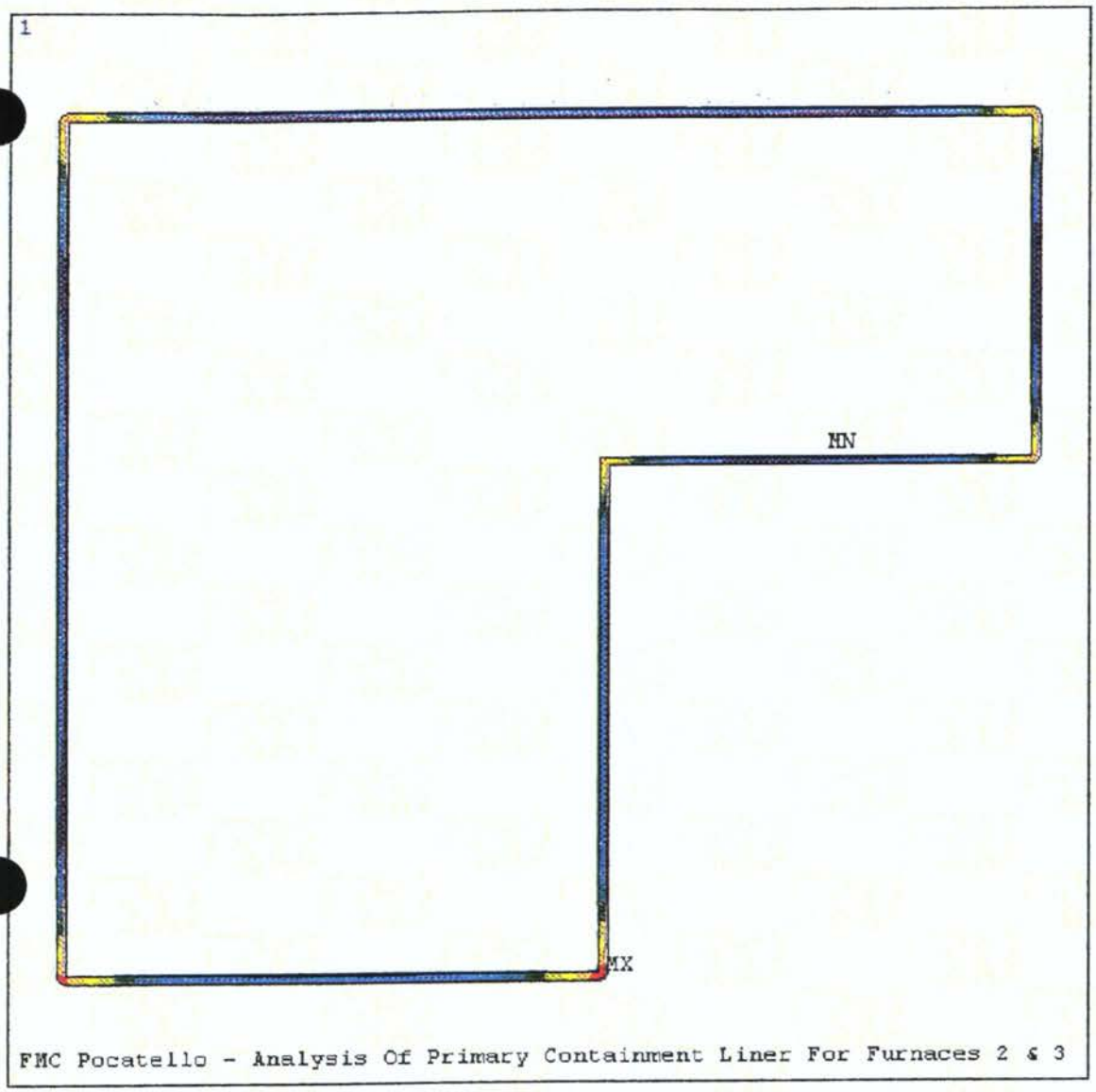

FMC Pocatello - Analysis Of Primary Containment Liner For Furnaces 2 & 3

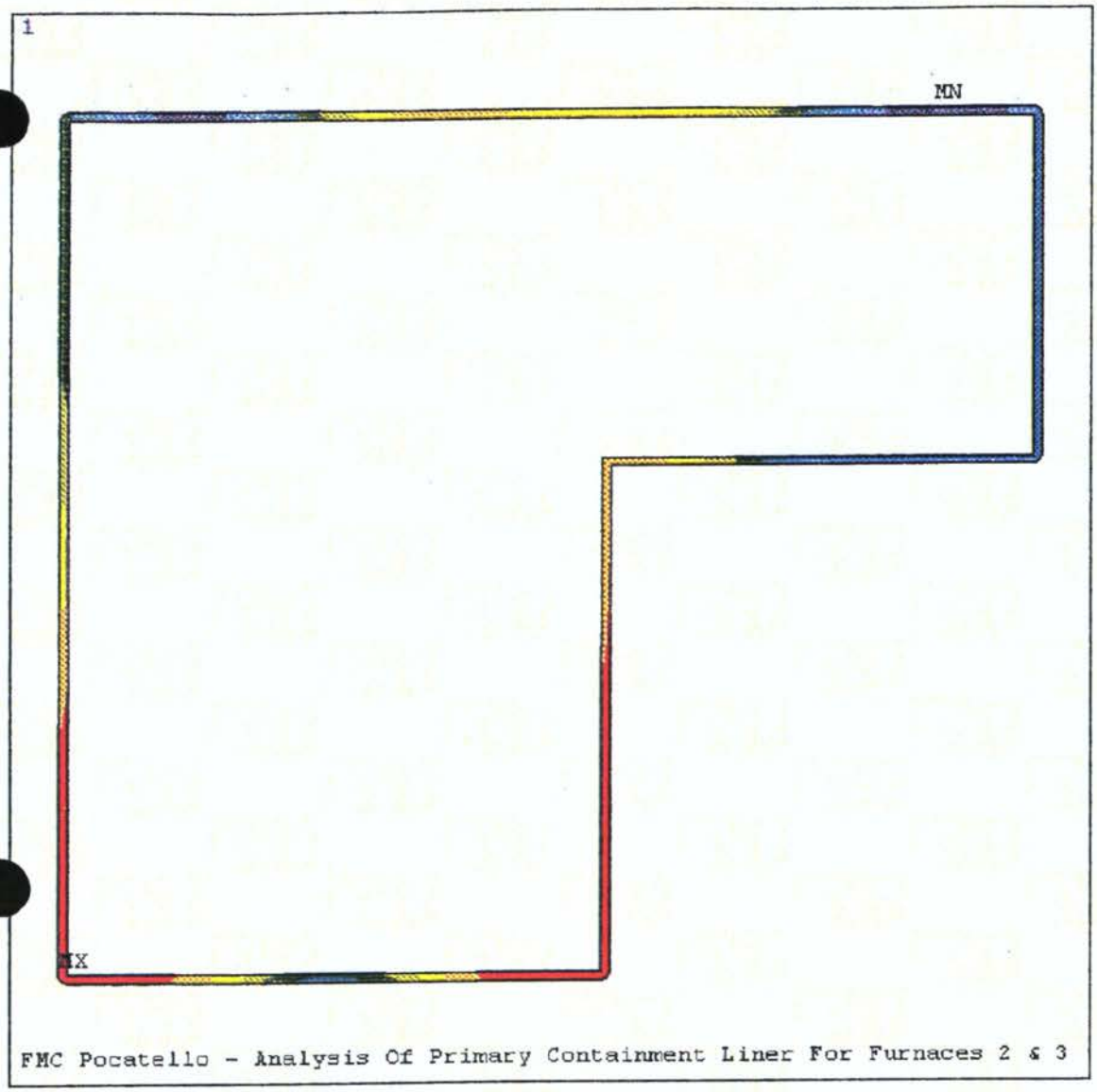

FMC Pocatello - Analysis Of Primary Containment Liner For Furnaces 2 & 3

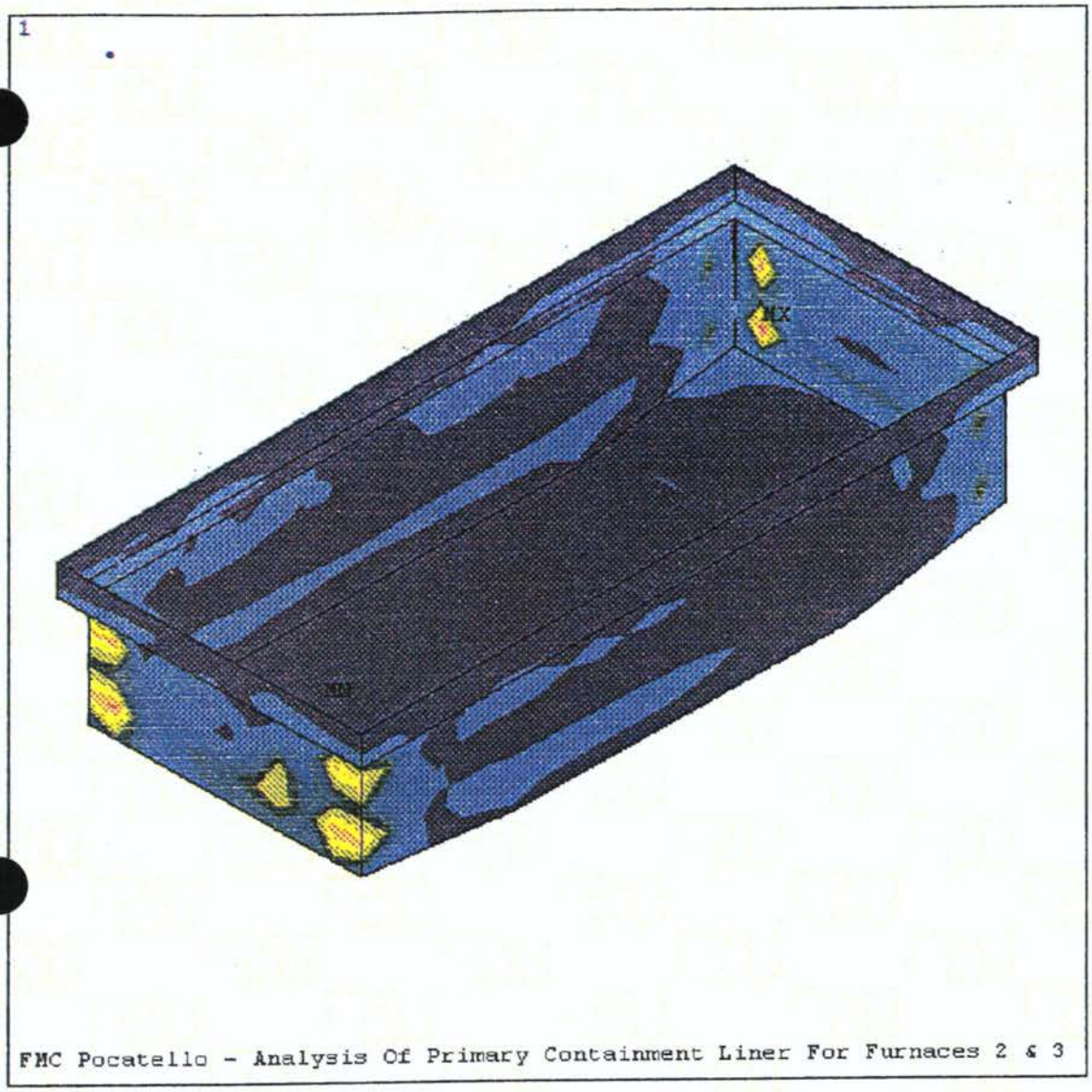

ANSYS 5.5.1SP
MAR 4 1999
10:37:49
NODAL SOLUTION
STEP=2
SUB =999999
TIME=2
SEQV (AVG)
BOTTOM
DMX =.623504
SMN =441.513
SMX =107843
SMXB=152547

441.513
12375
24308
36242
48175
60109
72042
83976
95909
107843

FMC Pocatello - Analysis Of Primary Containment Liner For Furnaces 2 & 3

FORM 5810 REV 1-93

Raytheon
Engineers & Constructors

CALCULATION SUMMARY & CONTROL SHEET

CALCULATION SET NO: 15-6

PRELIM.	FINAL	VOID	REVISION

DISCIPLINE

J.O.

PROJECT TITLE: FMC Point of Generation

STRUCTURE OR SYSTEM: Fire Building W.W Sump DESIGN CLASSIFICATION:

SUBJECT: Sump V-3400 and Containment Area Volumes

COMPLETED BY: Pete Critikos / PC DATE: 6/29/99

CHECKED BY: [signature] DATE: 6-30-99

APPROVED BY: _____ DATE: _____
SDE OR MGR OF STAFF GROUP

DISTRIBUTION:

REASON FOR REVISION:

TOTAL NUMBER OF SHEETS IN THIS ISSUE:

SHEETS REVISED, ADDED OR DELETED

PROBLEM STATEMENT:

Determine capacity of Sump and Containment Area for V-3400

SUMMARY CONCLUSIONS:

Volumes for:

Sump V-3400 = 3400 gal

Containment Area = 4750 gal

CHECK:

VOLUMES ARE IN ACCORDANCE WITH RCRA VOLUME REQUIREMENTS

PROFESSIONAL ENGINEER REGISTERED
7667
8/11/99
STATE OF IDAHO
C. THOMAS LOTKO II

ACE30017

FORM 5610 REV. 2/90

CALCULATION SUMMARY & CONTROL SHEET

CALCULATION SET NO.			
15-6			
PRELIM.	FINAL	VOID	REVISION

DISCIPLINE MECHANICAL

J.O. 96096.088

PROJECT TITLE FMC- Point of Generation

DESIGN BASIS:

1. DETERMINE VOLUME OF SUMP THROUGH SIMPLE GEOMETRIC CALCULATIONS
2. DETERMINE VOLUME OF CONTAINMENT AREA THROUGH SIMPLE GEOMETRIC CALCULATIONS
3. 1 cu ft = 7.48 gal

UNVERIFIED ASSUMPTIONS/OPEN ITEMS:

1. Determine volumes based on top of sump and top of liner elevations
2. Round Down to nearest 100 gallons
3. Volume differential due to checkered plating gaps is negligible
4. Dimensions are inside liner dimensions to maximum design liquid level
5. Sump Pumps and Dip stick monitors account for 3% of volume for containment area assume a 10% F.S.

REFERENCES: (SPECIFICATIONS, DRAWINGS, CODES, CALCULATIONS, TEXTS, REPORTS, COMPUTER DATA, FSAR, ETC.)

1. Dwg - 300666 - Rev 1: Standard Details Doublewall Containment, Sht 2
2. Dwg - 300667 - Rev 3: Standard Details Doublewall Containment, Sht 3
3. Dwg - 300679 - Rev 2: Furnace #3 Wastewater Collection Sump V-3400 Containment Plan
4. Dwg: 300680 - Rev 2: Furnace #3 Waste water Collection Sump V-3400 Containment Sections
5. Dwg: 300681 - Rev 0: Furnace #3 Wastewater Collection Sump V-3400 Containment Details Sht 1
6. Dwg: 300682 - Rev 2: Furnace #3 Waste water Collection Sump V-3400 Containment Details Sht 2
7. CFR 40 SUBPART J TANK SYSTEMS - TANK SIZE REQUIREMENTS
8. Dwg: 398901 Rev 0 : 1st Pass Slurry Tank No 3 Furnace 1997 OVERHAUL
9. Dwg: 398902 Rev 0 : 2nd Pass Slurry Tank No. 3 Furnace 1997 OVERHAUL
10. RECORD OF TELEPHONE CONVERSATION, RAT-020 DATED 8/10/99 (ATTACHMENT 1)

COMPUTER PROGRAM DISCLOSURE INFORMATION:

PROGRAM USED: (NAME)	REV. NO.	REV. DATE	PROGRAM TYPE	UE&C VERIFIED
—			—	☐ YES ☐ NO

ANALYSIS DESCRIPTION	RUN NO.	RESULT

The attached computer output has been reviewed, the input data checked, and the results approved for release.

INPUT CRITERIA BY _____ DATE _____ CHECKED BY _____ DATE _____

RUN BY _____ DATE _____ APPROVED BY _____ DATE _____

AU3930117/2

Form 5007 (Rev. 9/95)

Raytheon Engineers & Constructors	GENERAL COMPUTATION SHEET	CALCULATION SET NO. 15-6	REV. 0	COMP. BY PC	CHK'D. BY
		PRELIM. / FINAL / VOID		DATE 6/29/99	DATE
PROJECT FMC- Point of Generation		SHEET 3 OF 6		DATE	DATE
SUBJECT Sump V-3400 & Containment Area Vol.		J.O. 96096083			

A. Determine Volume in Sump V-3400

Solution (REF: 1 through 6)

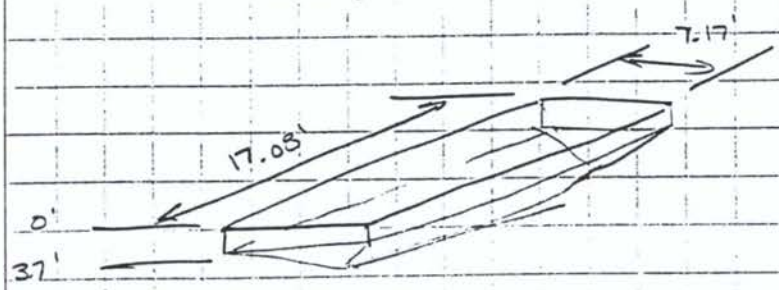

Volume = 7.17 x 17.08 x (3.7' - 0') + ½ (17.08 x 7.17 x (.71)

453 cu ft + 43.5 cu ft = 496.5 cu ft

less the end slope = 2 x ½ [(.71 x 7.17) x 4.27 = 14.5 cu ft

Total Volume: 496.5 - 14.5 = 482 cu ft x 7.48 gal/cu ft = 3605 gal

Adjust for equipment volume (3%)

3605 gal x .97 = 3497 gal say - 3400 gallons nominal

Form 5007 (Rev. 9/95)

Raytheon Engineers & Constructors	GENERAL COMPUTATION SHEET	CALCULATION SET NO. 15-6	REV. 0	COMP. BY PC	CHK'D. BY
		PRELIM. / FINAL / VOID		DATE 6/29/99	DATE
PROJECT FMC - Point of Generation		SHEET 4 OF 6		DATE	DATE
SUBJECT Sump V-3420 & Containment Area Volume		J.O. 96096.089			

B- Determine Volume in Containment Area: REF 1 → 6

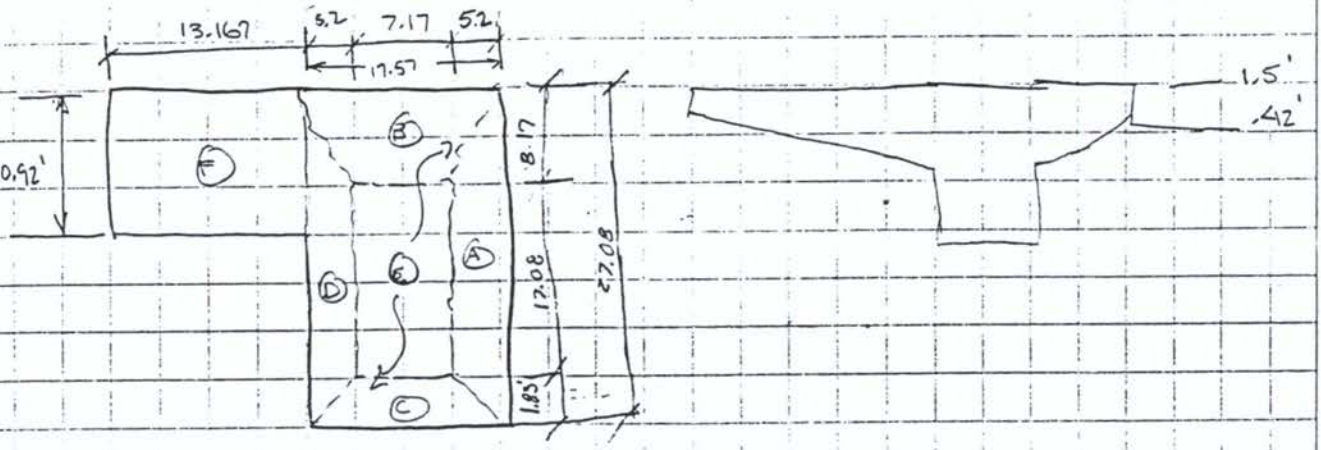

Volume A = $\frac{1}{6}$ (5.2) x .15 x [(2 x 17.08) + (27.08)] = 7.96 cu ft

Volume B = $\frac{1}{6}$ (8.17) x .13 x [(2 x 7.17) + (17.57)] = 5.6 cu ft

Volume C = $\frac{1}{6}$ (1.83) x .15 x [(2 x 7.17) + (17.57)] = 1.46 cu ft

Volume D = $\frac{1}{6}$ (5.2) x .15 x [(2 x 17.08) + (27.08)] = 7.96 cu ft

Volume E = 17.57 x 27.08 x (1.5' - .42') = 513 cu ft

Volume F = 13.167' x 10.92' x (1.5' - .42') + $\frac{1}{2}$ (13.167' x 10.92' x .21) =
155.3 cu ft + 15.1 cu ft = 170.4 cu ft

TOTAL = 706.4 cu ft x $\frac{7.48 \text{ gal}}{\text{cu ft}}$ = 5,283 gal

Apply F.S. (10%) = 5283 gal x .9 = 4755 gal say 4750 gal

Form 5007 (Rev. 9/95)

Raytheon Engineers & Constructors	GENERAL COMPUTATION SHEET	CALCULATION SET NO. 15-6	REV. 0	COMP. BY PC	CHK'D. BY
		PRELIM. / FINAL / VOID		DATE 8/10/99	DATE
PROJECT FMC - POINT OF GENERATION		SHEET 5 OF 6		DATE	DATE
SUBJECT Sump V-3400 & Containment Area Vol.		J.O. 96096.088			

C. Volume check: To be in accordance with RCRA requirements, at a minimum the volume needs to contain 100 percent of the largest tank within its boundry & either prevent run-on or infiltration of precipitation or have sufficient excess capacity to contain the infiltration of precipitation. Because the sump are located in the furnace building it only needs to be sized for 100 percent capacity of the largest tank. The largest tank in the system during normal operation is the precipitator slurry pots. (REF. 7)

C1. Slurry Pot Volume: Slurry pot design is a cylindrical vessel with semi eliptical ends for the head and base. The water level in the tank will never go above the overflow. To be conservative and make the volume calculation simpler assume the volume to be a cylinder with a wall height from the vessel bottom to the overflow point.

From Ref 8 & 9 (Rounded to next inch)

1st pass: Volume $= \pi\left(\frac{7^2}{4}\right) \times 4.25' = 163.6$ cu ft

or 163.6 cu.ft $\times 7.48 \frac{gal}{cu\,ft} = 1224$ gal.

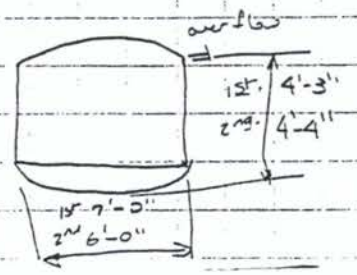

2nd pass: Volume $= \pi\left(\frac{6^2}{4}\right) \times 4.333' = 122.4$ cu ft

or $122.4 \times 7.48 \frac{gal}{cu.ft} = 916$ gal

Volume of containment area is sufficient to handle the volume of one or two slurry pots ∴ it has an acceptable volume.

C2. Precipitator Dump Volume: When required, the precipitator undergoes a washdown operation to clearout dust accumulation. The field estimate of water used for this operation is 4000 gallons. The volume of the Containment area and the sump combined is sufficient to handle the flow from this operation and the volume of one slurry pot. (Ref 10)

Form 5007 (Rev. 9/95)

Raytheon Engineers & Constructors	GENERAL COMPUTATION SHEET	CALCULATION SET NO. 15-6	REV. 0	COMP. BY PC	CHK'D. BY
		PRELIM. / FINAL / VOID		DATE 8/10/99	DATE
PROJECT FMC – POINT OF GENERATION		SHEET 6 OF 6		DATE	DATE
SUBJECT Sump V-3400 & Containment Area Vol.		J.O. 96096.088			

C3. Secondary Containment Volume: Sump V-3400 and the containment area volume are engineered with a secondary containment in the form of an integral double-walled tank. This secondary containment is constructed of stainless steel checkered plate. The design also incorporates a leak detection system for visible detection and warning of a release from the primary containment wall. (Refs 1 through 6)

This meets the regulatory requirements as defined in Ref 7 Section 265.193, Paragraphs d and e(3).

Calculation Set No 15-6 Rev 0
J.O. 96096.088
Attachment 1

Raytheon Engineers & Constructors

FMC

FMC - RAYTHEON ALLIANCE
RECORD OF TELEPHONE CONVERSATION

DATE: 8-10-99
TIME: 2:00 pm
PAGE 1 OF 1
TELECON NO. RAT -020

FROM: K Snow-McGregor	TO: Steve Wolf
COMPANY: Raytheon	COMPANY: FMC
PHONE: 2245	PHONE: (208) 236-8318
FMC ALLIANCE PROJECT NO.: 96096.088	
SUBJECT: Containment Requirement for Waste Water Sumps	

TOPICS OF CONVERSATION:

Steve Wolf informed me that the waste water sump containment requirement be defined as a precipitator bottom drop volume. Plant experience has been that a precipitator bottom drop volume typically is 3000 gallons. Steve said that 4000 gallons should be used as the containment volume required for this event on the waste water sumps, with the additional 1000 gallons as a safety factor.

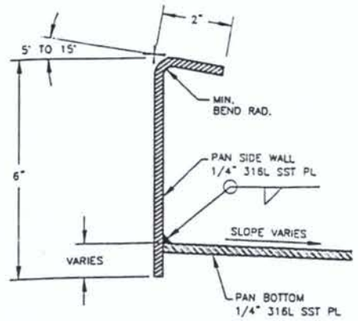

TYPICAL PAN SIDE WALL – DETAIL 1
SCALE: 6"=1'-0"

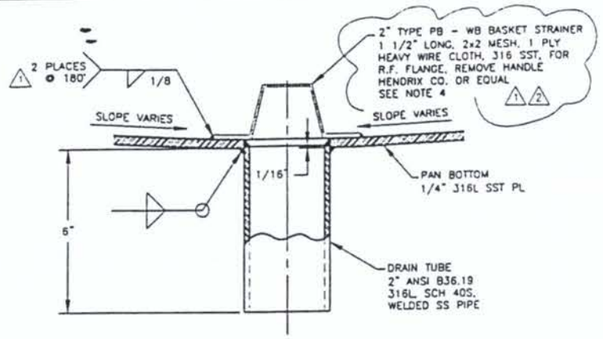

TYPICAL PAN BOTTOM DRAIN TUBE – DETAIL 2
SCALE: 6"=1'-0"

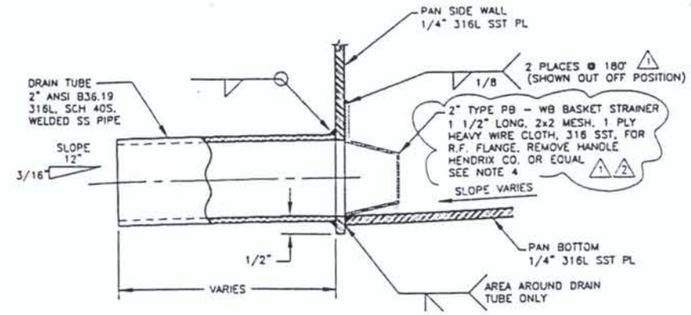

TYPICAL PAN SIDE DRAIN TUBE – DETAIL 3
SCALE: 6"=1'-0"

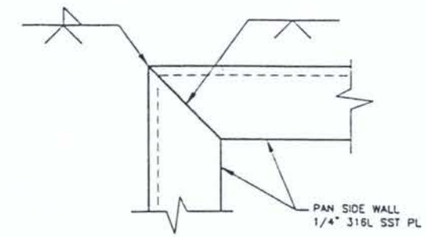

TYPICAL PAN CORNER – DETAIL 4
SCALE: 6"=1'-0"

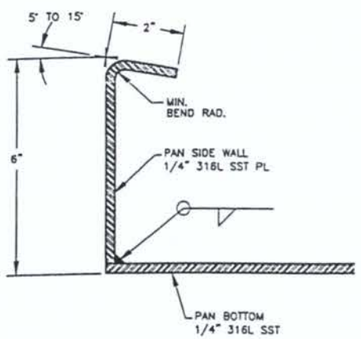

TYPICAL FLAT BOTTOM PAN SIDE WALL – DETAIL 5
SCALE: 6"=1'-0"

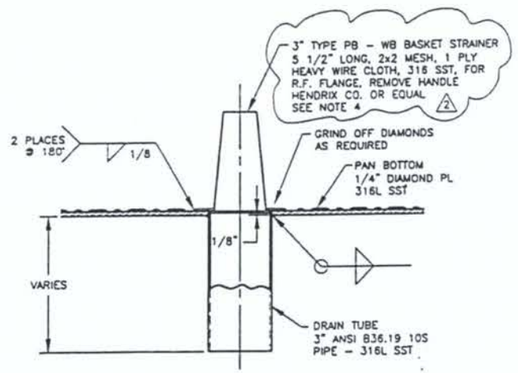

TYPICAL MEDUSA SCRUBBER DRIP PAN DRAIN TUBE – DETAIL 6 △1
SCALE: 3"=1'-0"

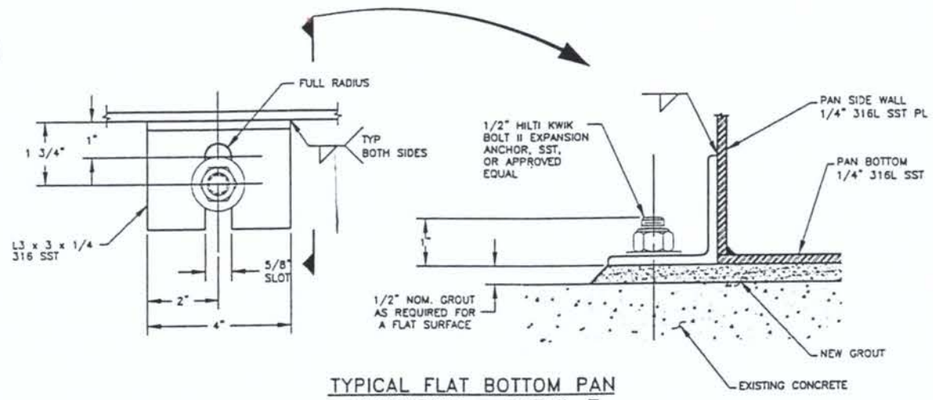

TYPICAL FLAT BOTTOM PAN ANCHORING – DETAIL 7
SCALE: 6"=1'-0"

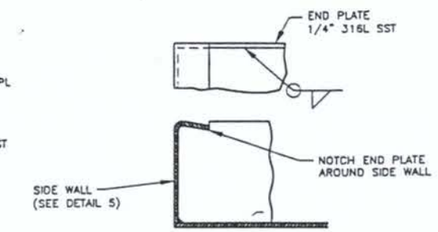

TYPICAL FLAT BOTTOM PAN END PLATE – DETAIL 8
SCALE: 3"=1'-0"

NOTES:

1. FOR GENERAL NOTES & STANDARD WELDING NOTES, SEE DRAWING 300663.
2. BREAK ALL SHARP EDGES AND REMOVE ALL BURRS.
3. TOLERANCES ON ALL DIMENSIONS ARE ± 1/16". DO NOT ACCUMULATE TOLERANCES.
4. HENDRIX (OR EQUAL) FROM:
   MUELLER FLOW TECHNOLOGIES
   HOUSTON, TX. PH 281-469-4520

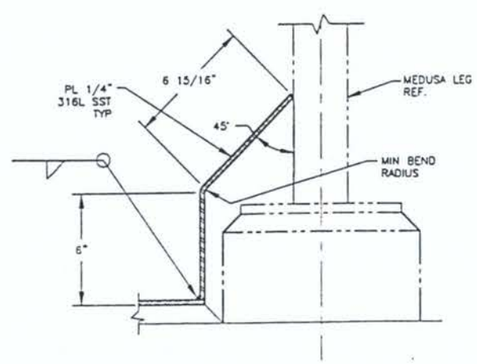

SPECIAL FLAT BOTTOM PAN SIDE WALL – DETAIL 10
SCALE: 3"=1'-0"

△1

REVISED & ISSUED FOR CONSTRUCTION

REVISION APPROVAL RECORD					REV
DISCIPLINE	REVIEWED	DATE	DISCIPLINE	REVIEWED	DATE
CIVIL			PIPING		
STRUCTURAL			ELECTRICAL		
HVAC			ARCHITECTURAL		
MECHANICAL			INST & CONTROL		
PROCESS			ENVIRONMENTAL		
NUCLEAR			CEN ARRANG		

Day & Zimmermann
Engineers & Constructors
A Construction or Design and O&M

DRAWING STATUS				
STATUS	REV	DATE	SDE	PEM
FOR APPROVAL	A	10/2/98	SKB	CTL
APPROVED FOR CONSTRUCTION	0	11/12/98	SKB	CTL
REVISED & APPROVED FOR CONSTRUCTION				

NOT APPROVED FOR CONSTRUCTION UNLESS SIGNED & DATED. DESTROY ALL PRINTS BEARING EARLIER DATE &/OR REV. NO.

WK	ZONE	REVISIONS	DATE	BY	APVD.
2		2x2 WIRE MESH STRAINER WAS 8x8	3/10/99	CLT	SKB
1		ADDED STRAINERS, REV DET 6, REMOVED DET 9	12/7/98	CLT	SKB
0		ISSUED FOR CONSTRUCTION	11/11/98	BG	SKB

FMC — PHOSPHORUS CHEMICAL DIVISION
FMC CORPORATION
POCATELLO, IDAHO

REFERENCE DRAWINGS
300663 P.O.G.-MECH. DWG INDEX

POINT OF GENERATION
STANDARD DETAILS
DRIP PANS

CHG C98-03 SCALE NOTED

DRAWN BG 7-16-98 APPROVED
CHECKED CLT 9-21-98 APPROVED

THIS PRINT AND ALL INFORMATION THEREON IS OUR PROPERTY, IS CONFIDENTIAL AND MUST NOT BE MADE PUBLIC OR COPIED UNLESS AUTHORIZED BY US. IT IS SUBJECT TO RETURN ON DEMAND. PHOSPHORUS CHEMICAL DIVISION

DRAWING IDENTIFIER

PLANT	SITE	DRAWING NO.	DISC.	REV.
P	FR	300664	M	2

PRINT DATE

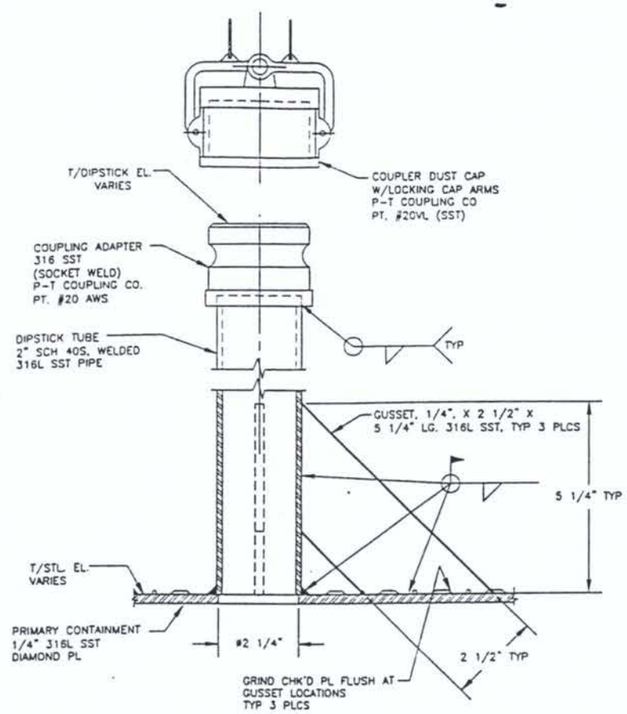

TYPICAL SUMP DIPSTICK TUBE – DETAIL 1

SCALE: 6"=1'-0"

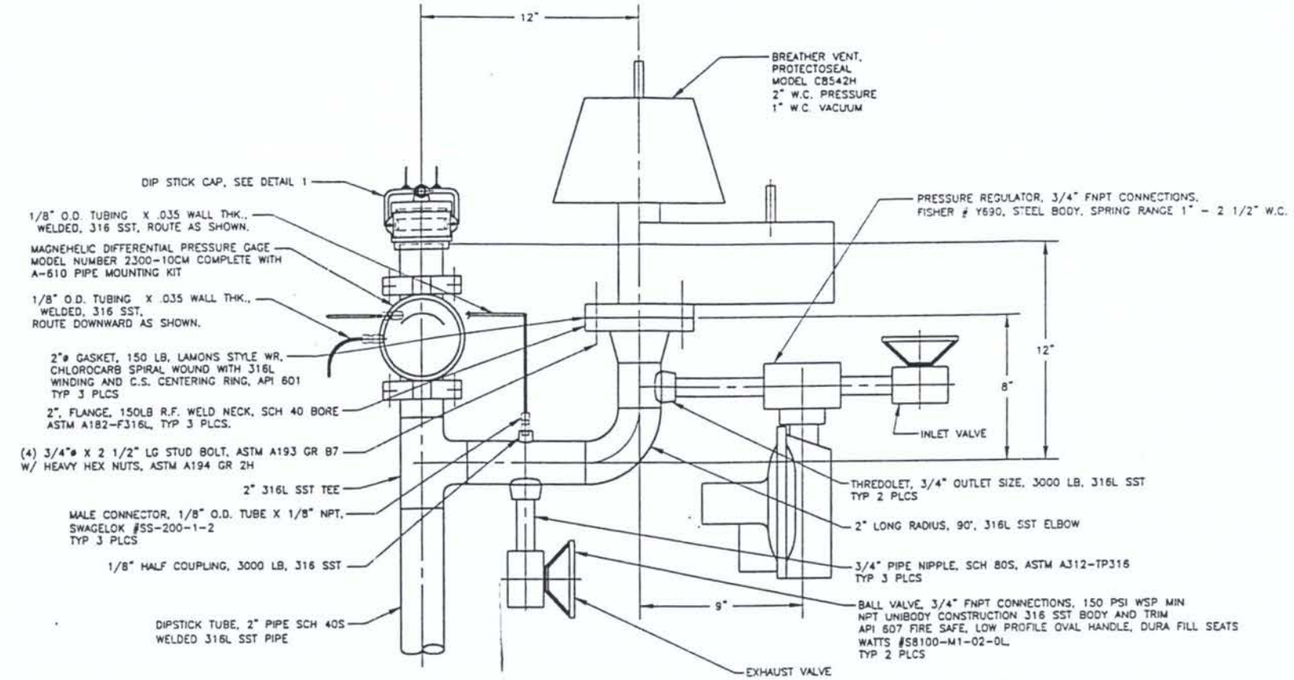

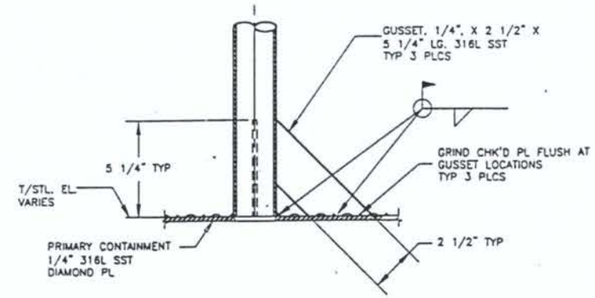

TYPICAL CONTAINMENT DIPSTICK TUBE – DETAIL 2

SCALE: 3"=1'-0"

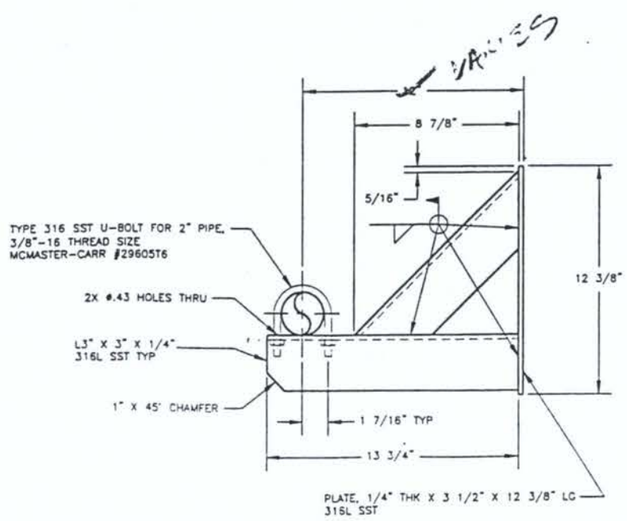

TYPICAL SUMP DIPSTICK TUBE BRACE– DETAIL 3

SCALE: 3"=1'-0"

NOTES:

1. FOR GENERAL NOTES & STANDARD WELDING NOTES, SEE DRAWING 300663.
2. BREAK ALL SHARP EDGES AND REMOVE ALL BURRS.
3. TOLERANCES ON ALL DIMENSIONS ARE ± 1/16". DO NOT ACCUMULATE TOLERANCES.
4. FOR PIPING SPECIFICATIONS, SEE POCATELLO ENGINEERING STANDARD SPEC # ES-2-2-0.

ISSUED FOR CONSTRUCTION

REVISION APPROVAL RECORD				REV 0	
DISCIPLINE	REVIEWED	DATE	DISCIPLINE	REVIEWED	DATE
CIVIL			PIPING		
STRUCTURAL	FJV	11/12/98	ELECTRICAL		
HVAC			ARCHITECTURAL		
MECHANICAL	SKB	11/12/98	INST & CONTROL		
PROCESS	GDG	11/12/98	ENVIRONMENTAL		
NUCLEAR			GEN. ARRANG.		

Day & Zimmermann
Engineers & Constructors
A Consortium of Design and Build

DRAWING STATUS				
STATUS	REV	DATE	SDE	PEM
FOR APPROVAL				
APPROVED FOR CONSTRUCTION	0	11/12/98	SKB	CTL
REVISED & APPROVED FOR CONSTRUCTION				

NOT APPROVED FOR CONSTRUCTION UNLESS SIGNED & DATED. DESTROY ALL PRINTS BEARING EARLIER DATE &/OR REV. NO.

REV	REVISIONS	DATE	BY	APVD
0	ISSUED FOR CONSTRUCTION	11/11/98	SAT	SKB

PHOSPHORUS CHEMICAL DIVISION
FMC CORPORATION
POCATELLO, IDAHO

REFERENCE DRAWINGS	
300663	POG MECH DWG INDEX
300666	DBL WALL CONT. SH. 1
300667	DBL WALL CONT. SH. 3
300668	DBL WALL CONT. SH. 4

POINT OF GENERATION
STANDARD DETAILS
DOUBLE WALL CONTAINMENT
SHEET 1

DWN C98-03 SCALE NOTED
DRAWN SAT 11-03-98 APPROVED
CHECKED APPROVED

THIS PRINT AND ALL INFORMATION THEREON IS OUR PROPERTY IS CONFIDENTIAL AND MUST NOT BE MADE PUBLIC OR COPIED UNLESS AUTHORIZED BY US. IT IS SUBJECT TO RETURN ON DEMAND
PHOSPHORUS CHEMICAL DIVISION

PLANT	SITE	DRAWING NO.	DISC	REV
P	FR	300665	M	0

PRINT DATE

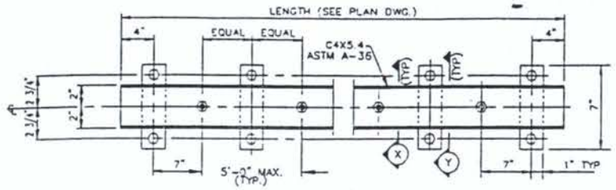

PLAN VIEW

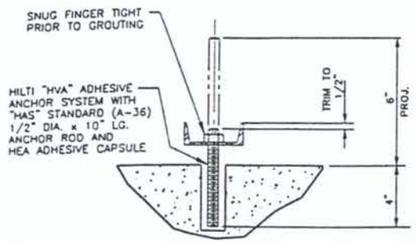

SECTION X-X

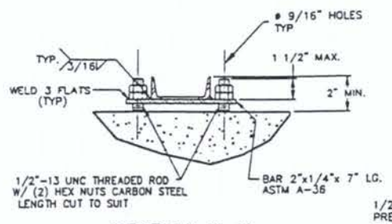

SECTION Y-Y

TYPICAL LEVELING CHANNEL – DETAIL 1

NO SCALE

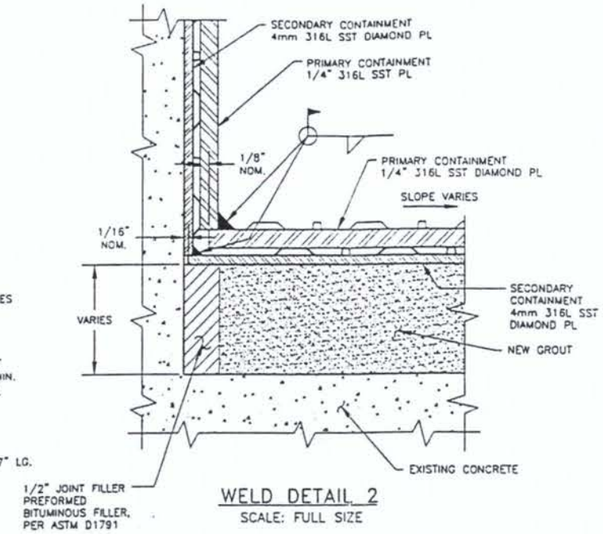

WELD DETAIL 2

SCALE: FULL SIZE

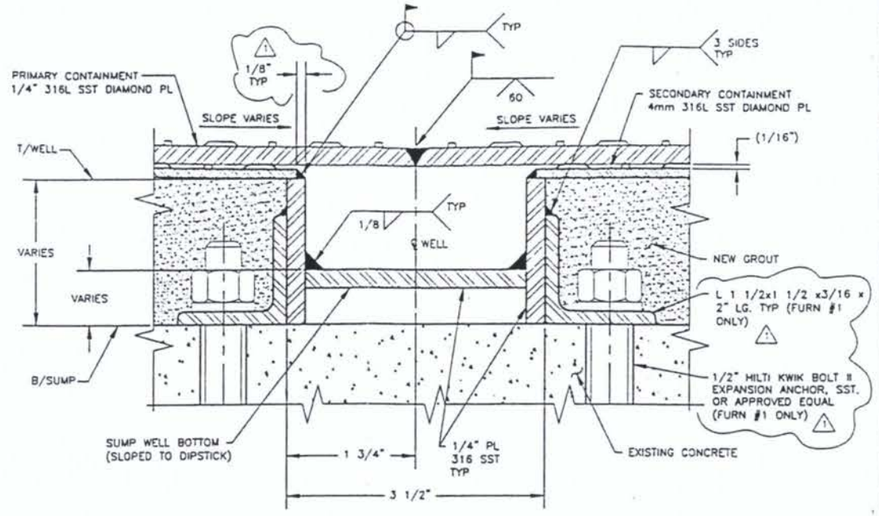

TYPICAL SUMP DIPSTICK WELL – DETAIL 3

SCALE: FULL SIZE

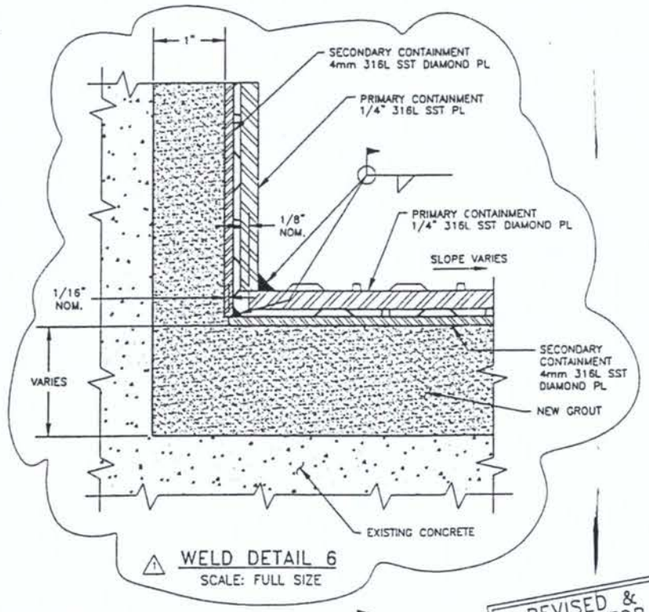

WELD DETAIL 6

SCALE: FULL SIZE

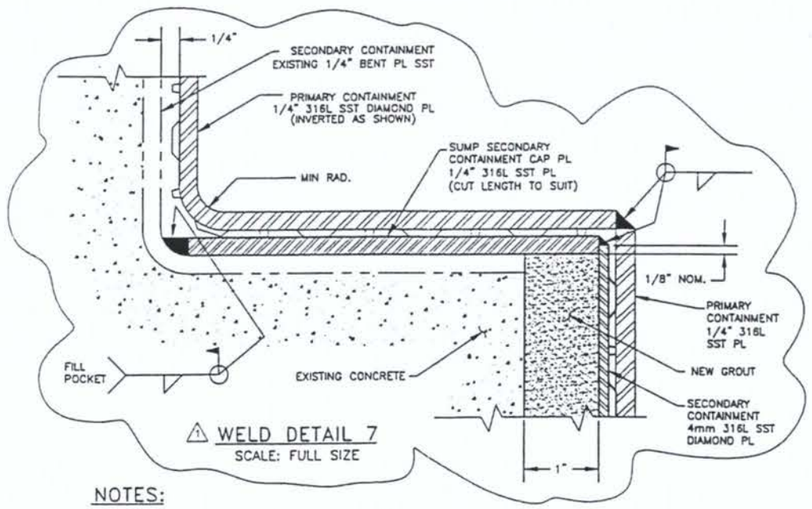

WELD DETAIL 7

SCALE: FULL SIZE

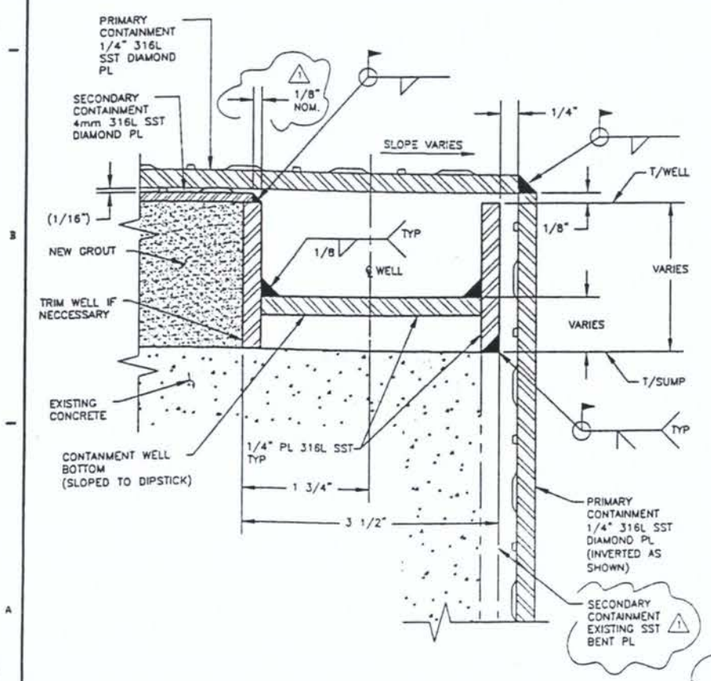

TYPICAL CONTAINMENT DIPSTICK WELL – DETAIL 4

SCALE: FULL SIZE

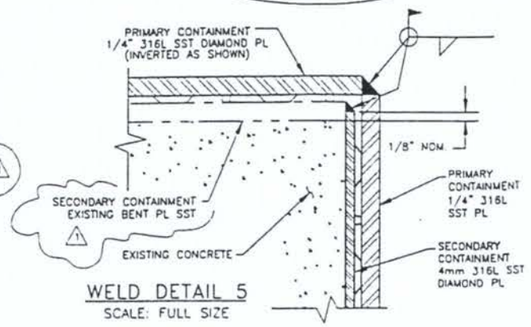

WELD DETAIL 5

SCALE: FULL SIZE

REVISED & ISSUED FOR CONSTRUCTION

NOTES:

1. FOR GENERAL NOTES & STANDARD WELDING NOTES, SEE DRAWING 300663.
2. BREAK ALL SHARP EDGES AND REMOVE ALL BURRS.
3. TOLERANCES ON ALL DIMENSIONS ARE ± 1/16". DO NOT ACCUMULATE TOLERANCES.
4. FIELD WELDS SHOWN MAY BE SHOP WELDS, WHERE POSSIBLE, INSTALLERS OPTION.

REVISION APPROVAL RECORD				REV	
DISCIPLINE	REVIEWED	DATE	DISCIPLINE	REVIEWED	DATE
CIVIL			PIPING		
STRUCTURAL			ELECTRICAL		
HVAC			ARCHITECTURAL		
MECHANICAL			INST & CONTROL		
PROCESS			ENVIRONMENTAL		
NUCLEAR			GEN ARRANG.		

Day & Zimmermann
Engineers & Constructors
A Consortium of Bechtel and VEAC

DRAWING STATUS				
STATUS	REV	DATE	SDE	PEM
FOR APPROVAL	A	10/2/98	SKB	CTL
APPROVED FOR CONSTRUCTION	0	11/12/98	SKB	CTL
REVISED & APPROVED FOR CONSTRUCTION				

NOT APPROVED FOR CONSTRUCTION UNLESS SIGNED & DATED. DESTROY ALL PRINTS BEARING EARLIER DATE &/OR REV. NO.

MK	ZONE	REVISIONS	DATE	BY	APVD
1		ADDED NOTE 4, DETS 6 & 7, DET 3 ADD (FURN 1	3/26/99	CLT	SKB
		ONLY) TO CALLOUTS, DET 4 & 5 REMOVED PL SIZE			
		FROM CALLOUTS, DET 3 & 4 ADD NOM TO 1/8" DIM			
0		ISSUED FOR CONSTRUCTION	11/11/98	CLT	SKB

FMC — PHOSPHORUS CHEMICAL DIVISION
FMC CORPORATION
POCATELLO, IDAHO — FMC

REFERENCE DRAWINGS	
300663	POG MECH DWG INDEX
300665	DBL WALL CONT. SH. 1
300667	DBL WALL CONT. SH. 3
300668	DBL WALL CONT. SH. 4

CHP C98-03 SCALE NOTED

THIS PRINT AND ALL INFORMATION THEREON IS OUR PROPERTY IS CONFIDENTIAL AND MUST NOT BE MADE PUBLIC OR COPIED UNLESS AUTHORIZED BY US. IT IS SUBJECT TO RETURN ON DEMAND. PHOSPHORUS CHEMICAL DIVISION

POINT OF GENERATION STANDARD DETAILS DOUBLE WALL CONTAINMENT SHEET 2

DRAWN CLT 7-8-98 APPROVED
CHECKED BG 9-16-98 APPROVED

DRAWING IDENTIFIER

PLANT	SITE	DRAWING NO	TYPE	REV
P	FR	300666	M	1

1 PRINT DATE

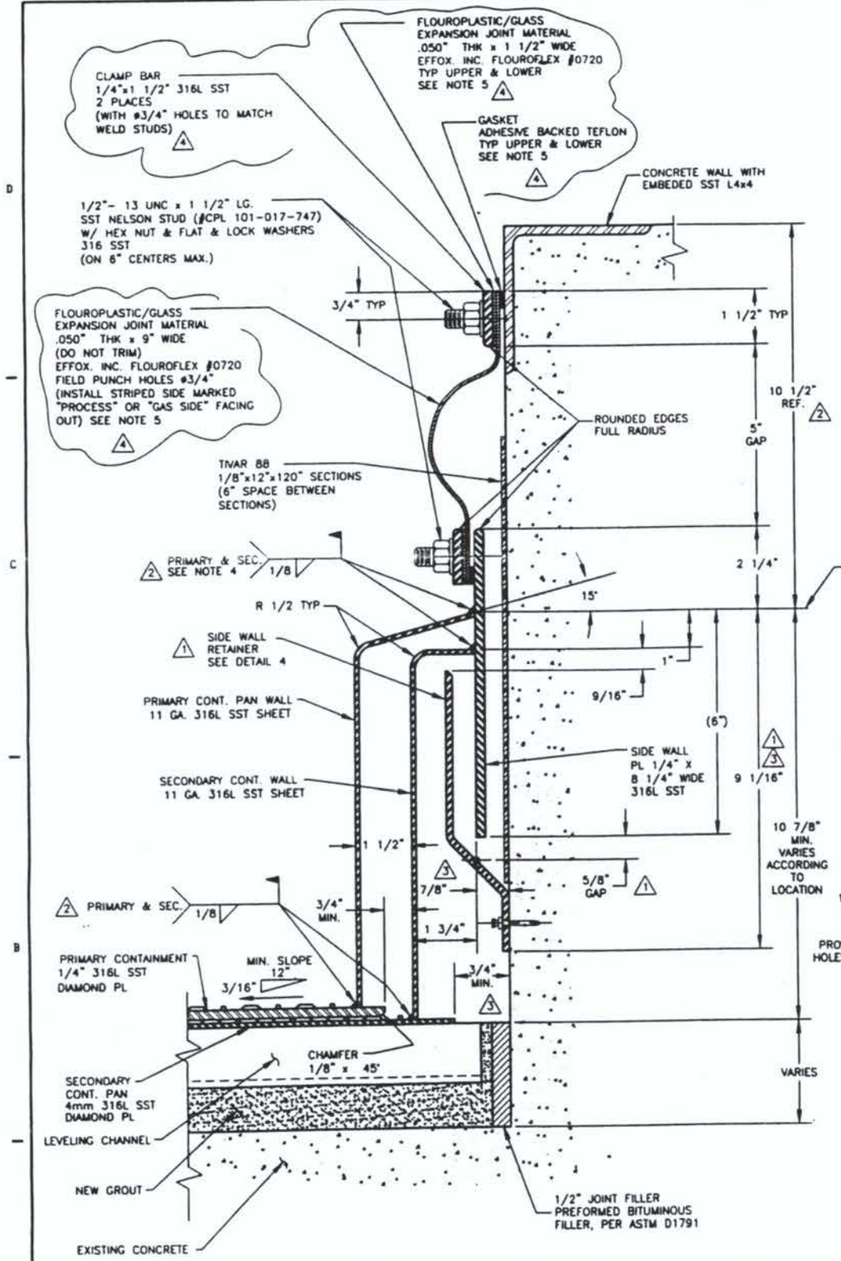

TYPICAL CONTAINMENT WALL - DETAIL 1

SCALE: 6"=1'-0"

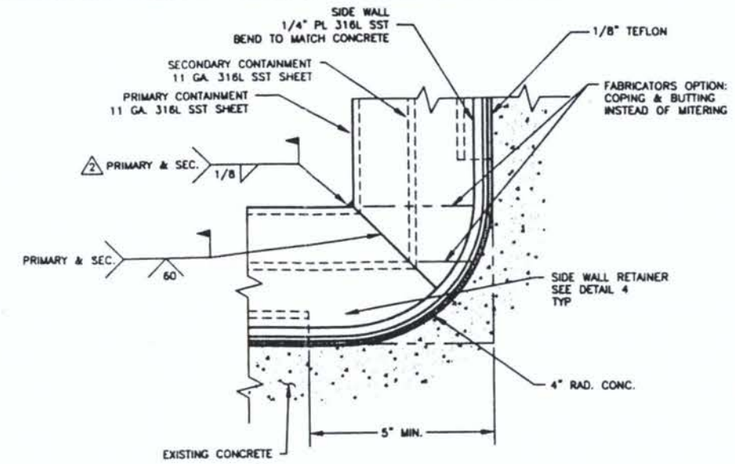

TYPICAL CONTAINMENT WALL JOINT - DETAIL 2

SCALE: 6"=1'-0"

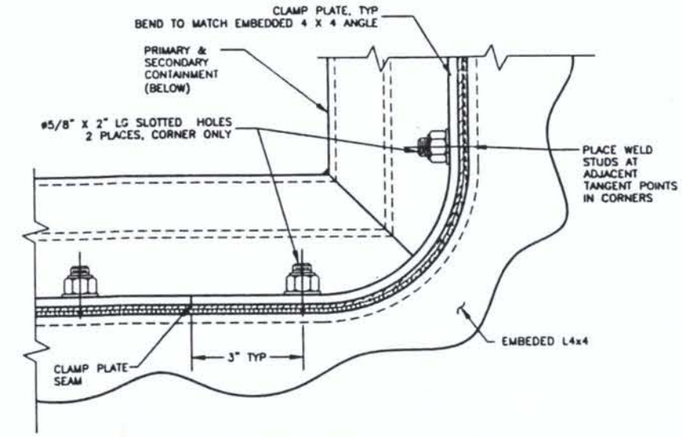

TYPICAL EXPANSION CORNER - DETAIL 3

SCALE: 6"=1'-0"

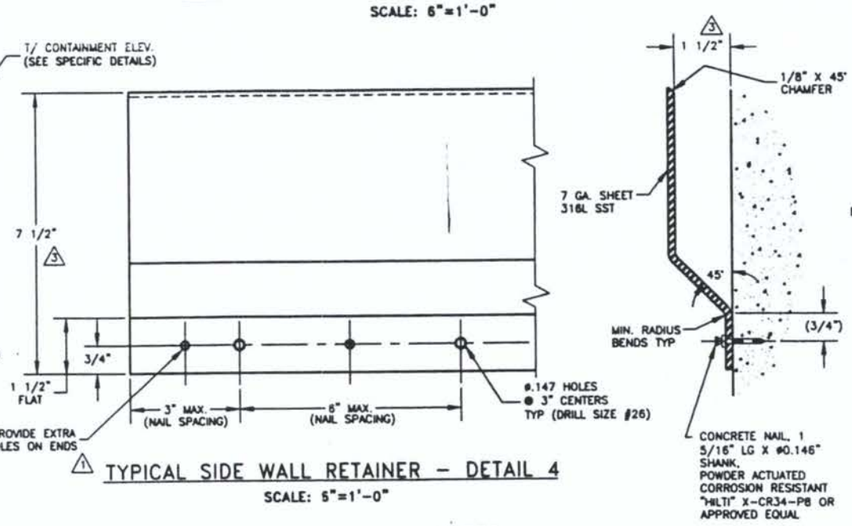

1 TYPICAL SIDE WALL RETAINER - DETAIL 4

SCALE: 6"=1'-0"

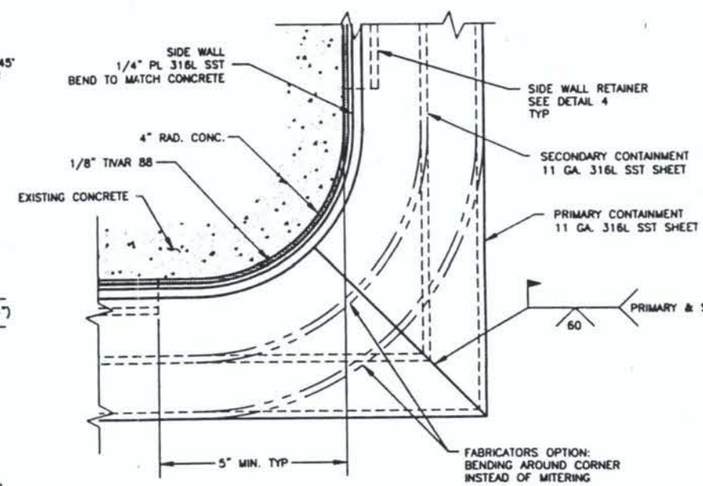

2 TYPICAL CONTAINMENT WALL JOINT - DETAIL 5

SCALE: 6"=1'-0"

NOTES:

1. FOR GENERAL NOTES & STANDARD WELDING NOTES, SEE DRAWING 300663.
2. BREAK ALL SHARP EDGES AND REMOVE ALL BURRS.
3. TOLERANCES ON ALL DIMENSIONS ARE ± 1/16". DO NOT ACCUMULATE TOLERANCES.
4. 3 SECONDARY CONTAINMENT PLATES MUST BE FLAT AND IN CONTACT WITH THE GROUT, AND THE PRIMARY CONTAINMENT PLATES MUST BE FLAT AND IN CONTACT WITH THE SECONDARY CONTAINMENT PLATES, PRIOR TO WELDING THE PAN WALL TO THE SIDE WALL.
5. 4 GASKETS & EXPANSION JOINT MATERIAL SHALL NOT PROTRUDE PAST CLAMP BARS (ALIGN EDGES).

REVISED & ISSUED FOR CONSTRUCTION

4	ADDED NOTE 5, REVISED CALLOUTS FOR EXPANSION JOINT COMPONENTS	8/23/99	CLT	SKB
3	REVISED NOTE 4, DIM 1 1/2" WAS 1", 1/2" WAS 7/8", 3/4" WAS 1/2", 9 1/16" WAS 8 9/16", 7 1/2" WAS 7"	5/10/99	CLT	SKB
2	ADDED DET 5, ADD 1/8" DEPTH TO FILLET WELDS; ADDED 10 1/2" REF DIM TO DET 1	4/5/99	CLT	SKB
1	REVISED DET 4, DET 1 DIM 8 9/16" WAS 7 11/16"; REMOVED FABRICATORS OPTION FROM 1/2" GAP	3/26/99	CLT	SKB
0	ISSUED FOR CONSTRUCTION	11/11/98	CLT	SKB
MK	ZONE / REVISIONS	DATE	BY	APVD.

PHOSPHORUS CHEMICAL DIVISION
FMC CORPORATION
POCATELLO, IDAHO

REFERENCE DRAWINGS	
300663	POG MECH DWG INDEX
300665	DBL WALL CONT. SH. 1
300666	DBL WALL CONT. SH. 2
300668	DBL WALL CONT. SH. 4

POINT OF GENERATION
STANDARD DETAILS
DOUBLE WALL CONTAINMENT
SHEET 3

DRAWN CLT 7-16-98 APPROVED
CHECKED BG 9-16-98 APPROVED

C96-03 SCALE NOTED

THIS PRINT AND ALL INFORMATION THEREON IS OUR PROPERTY, IS CONFIDENTIAL AND MUST NOT BE MADE PUBLIC OR COPIED UNLESS AUTHORIZED BY US. IT IS SUBJECT TO RETURN ON DEMAND
PHOSPHORUS CHEMICAL DIVISION

DRAWING IDENTIFIER

PLANT	SITE	DRAWING NO.	DISC	REV.
P	FR	300667	M	4

PRINT DATE

Bechtel Engineers & Constructors

DRAWING STATUS

STATUS	REV	DATE	SDE	PEM
FOR APPROVAL	A	10/2/98	SKB	CTL
APPROVED FOR CONSTRUCTION	0	11/12/98	SKB	CTL
REVISED & APPROVED FOR CONSTRUCTION	4	8/23/99	SKB	CTL

NOT APPROVED FOR CONSTRUCTION UNLESS SIGNED & DATED. DESTROY ALL PRINTS BEARING EARLIER DATE &/OR REV. NO.

REVISION APPROVAL RECORD — REV 4

DISCIPLINE	REVIEWED	DATE	DISCIPLINE	REVIEWED	DATE
CIVIL			PIPING		
STRUCTURAL			ELECTRICAL		
HVAC			ARCHITECTURAL		
MECHANICAL	SKB	8-25-99	INST & CONTROL		
PROCESS			ENVIRONMENTAL		
NUCLEAR			GEN. ARRANG.		

PROFESSIONAL ENGINEER REGISTERED 7867 8/27/99 STATE OF IDAHO C. THOMAS LOYKO II

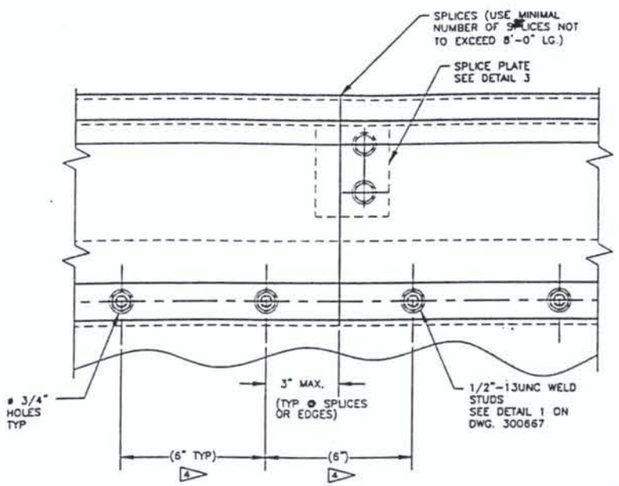

TYPICAL SPLASH GUARD – DETAIL 1

SCALE: 4"=1'-0"

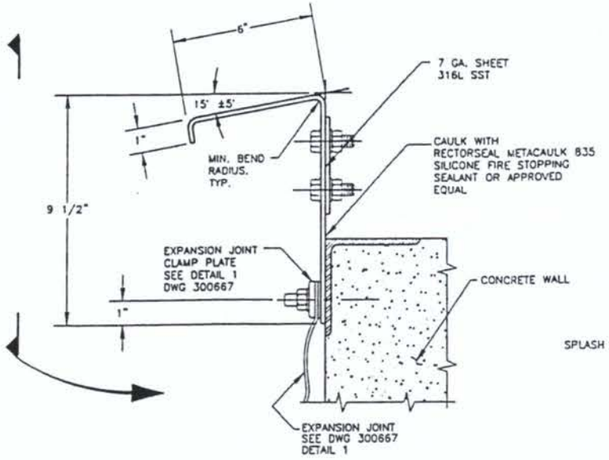

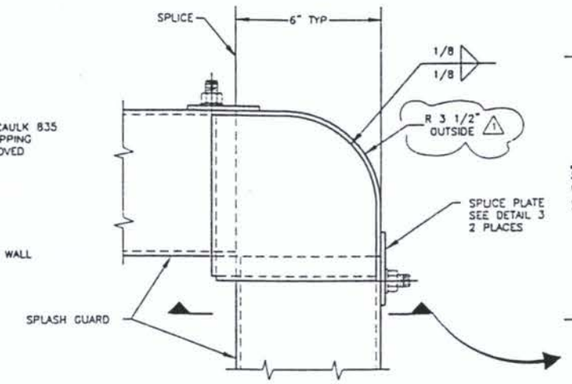

TYPICAL CORNER SPLASH GUARD – DETAIL 2

SCALE: 4"=1'-0"

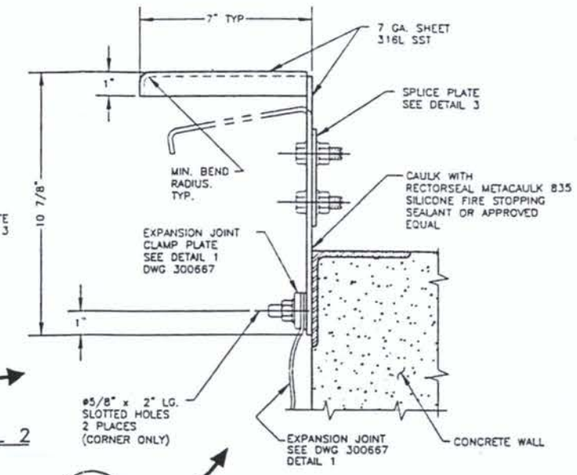

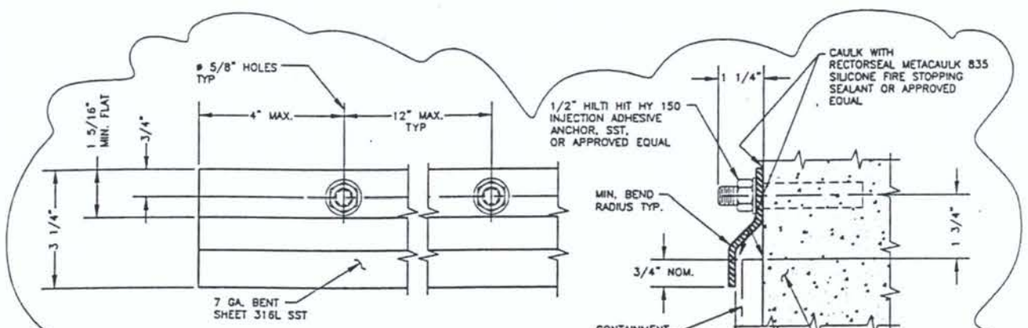

1 TYPICAL FLASHING – DETAIL 4

SCALE: 6"=1'-0"

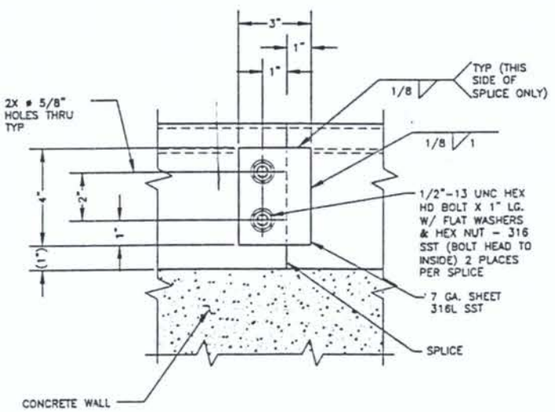

TYPICAL SPLICE PLATE – DETAIL 3

SCALE: 4"=1'-0"

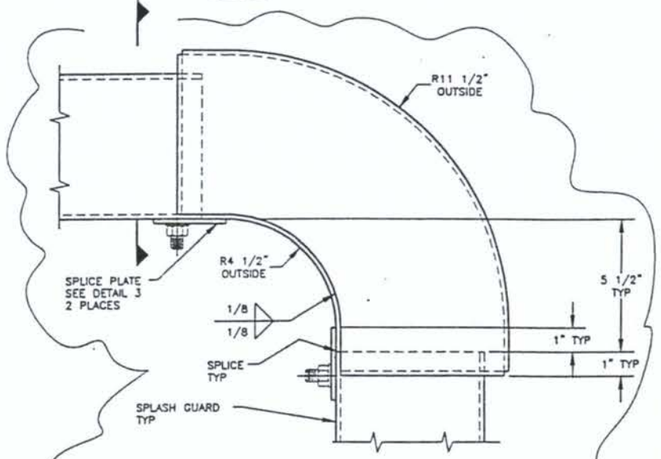

TYPICAL CORNER SPLASH GUARD – DETAIL 6

1 SCALE: 4"=1'-0"

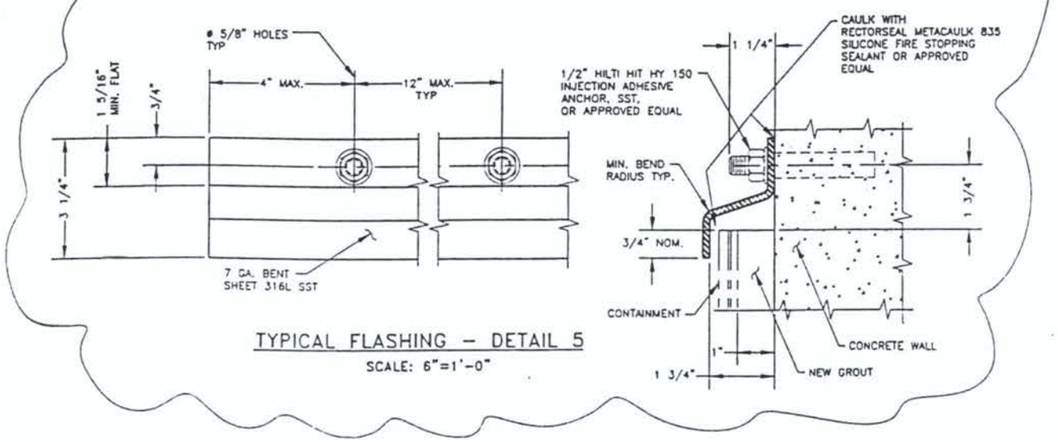

TYPICAL FLASHING – DETAIL 5

SCALE: 6"=1'-0"

REVISED & ISSUED FOR CONSTRUCTION

NOTES:

1. FOR GENERAL NOTES & STANDARD WELDING NOTES, SEE DRAWING 300663.
2. BREAK ALL SHARP EDGES AND REMOVE ALL BURRS.
3. TOLERANCES ON ALL DIMENSIONS ARE ± 1/16". DO NOT ACCUMULATE TOLERANCES.

4 MATCH WELD STUDS – SEE DETAIL 1 ON DWG 300667.

REVISION APPROVAL RECORD					REV
DISCIPLINE	REVIEWED	DATE	DISCIPLINE	REVIEWED	DATE
CIVIL			PIPING		
STRUCTURAL			ELECTRICAL		
HVAC			ARCHITECTURAL		
MECHANICAL			INST & CONTROL		
PROCESS			ENVIRONMENTAL		
NUCLEAR			GEN ARRANG.		

DuPont Engineers & Constructors

DRAWING STATUS				
STATUS	REV	DATE	SDE	PEM
FOR APPROVAL	A	10/2/98	SKB	CTL
APPROVED FOR CONSTRUCTION	0	11/12/98	SKB	CTL
REVISED & APPROVED FOR CONSTRUCTION				

NOT APPROVED FOR CONSTRUCTION UNLESS SIGNED & DATED. DESTROY ALL PRINTS BEARING EARLIER DATE &/OR REV NO

WK	ZONE	REVISIONS	DATE	BY	APVD
1		REVISED DETAIL 4, ADDED DETAIL 5 & 6	3/26/99	CLT	SKB
		ADDED R 3 1/2" OUTSIDE TO DETAIL 2			
0		ISSUED FOR CONSTRUCTION	11/11/98	CLT	SKB

FMC PHOSPHORUS CHEMICAL DIVISION
FMC CORPORATION
POCATELLO, IDAHO

REFERENCE DRAWINGS	
300663	POG MECH DWG INDEX
300665	DBL WALL CONT. SH. 1
300666	DBL WALL CONT. SH. 2
300667	DBL WALL CONT. SH. 3

POINT OF GENERATION
STANDARD DETAILS
DOUBLE WALL CONTAINMENT
SHEET 4

DWG C98-03 SCALE NOTED

DRAWN CLT 9-10-98 APPROVED
CHECKED BG 9-16-98 APPROVED

THIS PRINT AND ALL INFORMATION THEREON IS OUR PROPERTY IS CONFIDENTIAL AND MUST NOT BE MADE PUBLIC OR COPIED UNLESS AUTHORIZED BY US. IT IS SUBJECT TO RETURN ON DEMAND
PHOSPHORUS CHEMICAL DIVISION

DRAWING IDENTIFIER

PLANT	SITE	DRAWING NO	DISC	REV
P	FR	300668	M	1

PRINT DATE

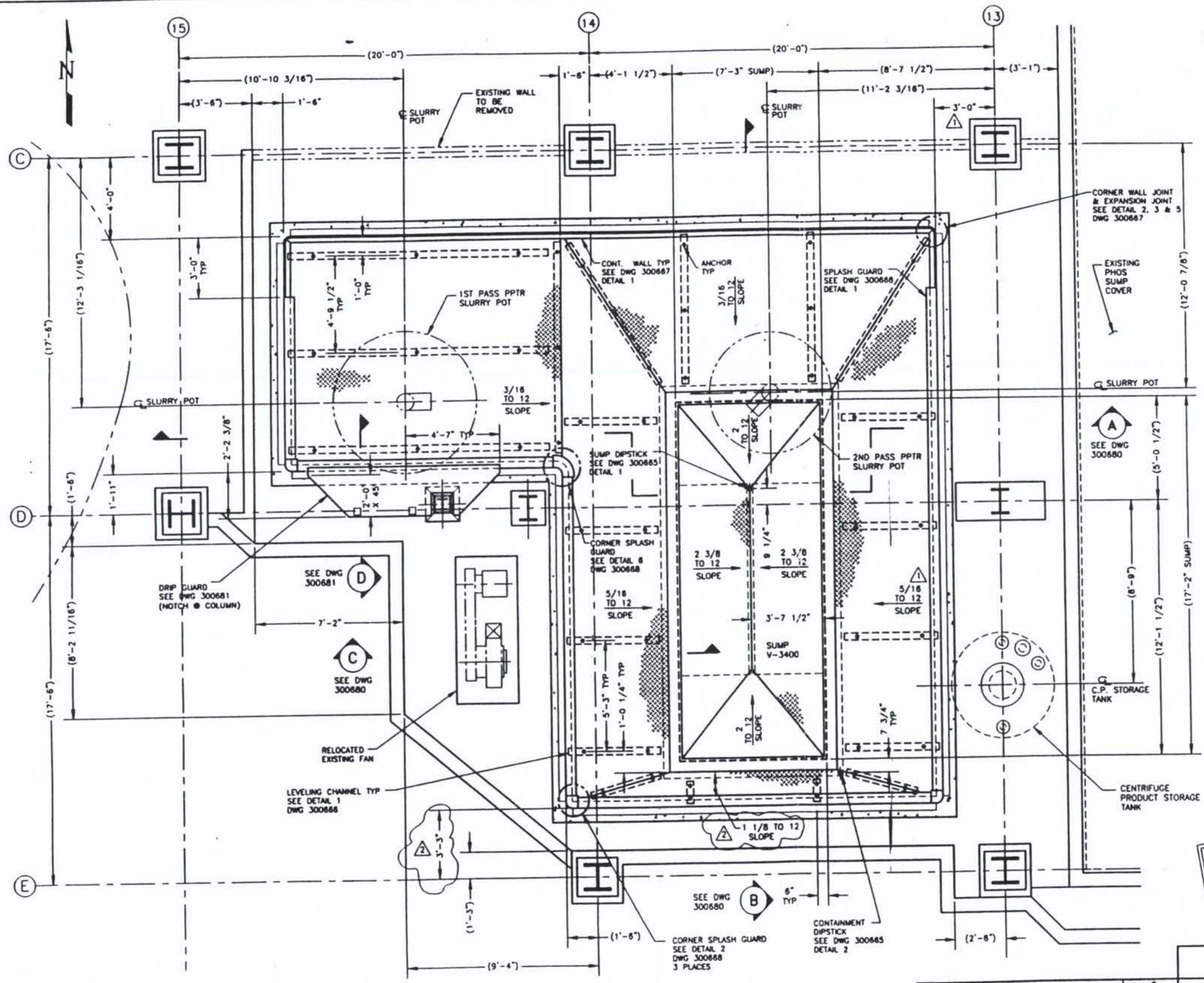

FURNACE #3 WASTE WATER COLLECTION SUMP V-3400 - CONTAINMENT PLAN

SCALE: 3/8"=1'-0"

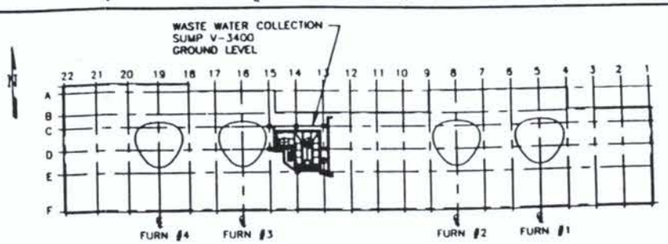

KEY PLAN

NO SCALE

NOTES:

1. FOR GENERAL NOTES & STANDARD WELDING NOTES, SEE DRAWING 300663.

INSTALLATION NOTES:

1. CLEAN AND THEN FILL THE CENTRIFUGE PRODUCT STORAGE TANK WITH SAND.
2. POUR CONCRETE BACKFILL IN AREAS SHOWN PER P.O.G. CONCRETE DRAWING 300646.
3. INSTALL CONTAINMENT WELL.
4. INSTALL LEVELING CHANNELS INTO CONTAINMENT AREA.
5. POUR NEW GROUT USING LEVELING CHANNELS FOR GUIDES.
6. POSITION SECONDARY CONTAINMENT LINER SHELL INTO THE SUMP PIT & BRACE FOR GROUTING.
7. POUR SECONDARY LINER GROUT IN SUMP AREA.
8. INSTALL SUMP SECONDARY CONTAINMENT CAP PLATE.
9. INSTALL PRIMARY CONTAINMENT LINER INTO THE SUMP PIT.
10. INSTALL THE SIDE WALL RETAINER AROUND THE PERIMETER OF THE CONTAINMENT AREA.
11. INSTALL THE PRIMARY & SECONDARY CONTAINMENT SECTIONS & WELD TOGETHER.
12. INSTALL THE DIP STICK TUBES, EXPANSION SEAL, SPLASH GUARDS, AND DRIP GUARDS.

REVISED & ISSUED FOR CONSTRUCTION

REVISION APPROVAL RECORD					REV 2
DISCIPLINE	REVIEWED	DATE	DISCIPLINE	REVIEWED	DATE
CIVIL			PIPING		
STRUCTURAL	RV	8-3-99	ELECTRICAL		
HVAC			ARCHITECTURAL		
MECHANICAL	CTL	8/5/99	INST & CONTROL		
PROCESS			ENVIRONMENTAL		
NUCLEAR			GEN. ARRANG.		

DRAWING STATUS				
STATUS	REV	DATE	SDE	PEM
FOR APPROVAL	A	10/29/98	SKB	CTL
APPROVED FOR CONSTRUCTION	0	4/8/99	SKB	CTL
REVISED & APPROVED FOR CONSTRUCTION	2	8/5/99	CTL for SKB	CTL

NOT APPROVED FOR CONSTRUCTION UNLESS SIGNED & DATED
DESTROY ALL PRINTS BEARING EARLIER DATE &/OR REV NO

MK	ZONE	REVISIONS	DATE	BY	APVD
2		DIM. 3'-3" WAS 2'-9", SLOPE 1 1/8 WAS 13/16	8/3/99	CLT	CTL
1		DIM. 3'-0" WAS 1'-9", SLOPE 5/16 WAS 1/4	4/22/99	CLT	SKB
0		ISSUED FOR CONSTRUCTION	4/9/99	CLT	SKB

FMC — PHOSPHORUS CHEMICAL DIVISION
FMC CORPORATION
POCATELLO, IDAHO — FMC

REFERENCE DRAWINGS	
300663	POG MECH DWG INDEX
395073	PLAN CONC. GRD FLR
391807	ARRG. PIPING PPTR
391815	ARRG. CENT. PROD. TANK
399453	ARRG. CONC. 0'-0"
-	CONTINUED ON 300680

CHG. C98-03 SCALE NOTED

THIS PRINT AND ALL INFORMATION THEREON IS OUR PROPERTY, IS CONFIDENTIAL AND MUST NOT BE MADE PUBLIC OR COPIED UNLESS ALLOWED BY US. IT IS SUBJECT TO RETURN ON DEMAND. PHOSPHORUS CHEMICAL DIVISION

POINT OF GENERATION
FURNACE #3
WASTE WATER COLLECTION
SUMP V-3400
CONTAINMENT PLAN

DRAWN CLT 7-15-98 APPROVED
CHECKED SKB 4-5-99 APPROVED

DRAWING IDENTIFIER

PLANT	SITE	DRAWING NO	DWG	REV
P	F3	300679	M	2

PRINT DATE

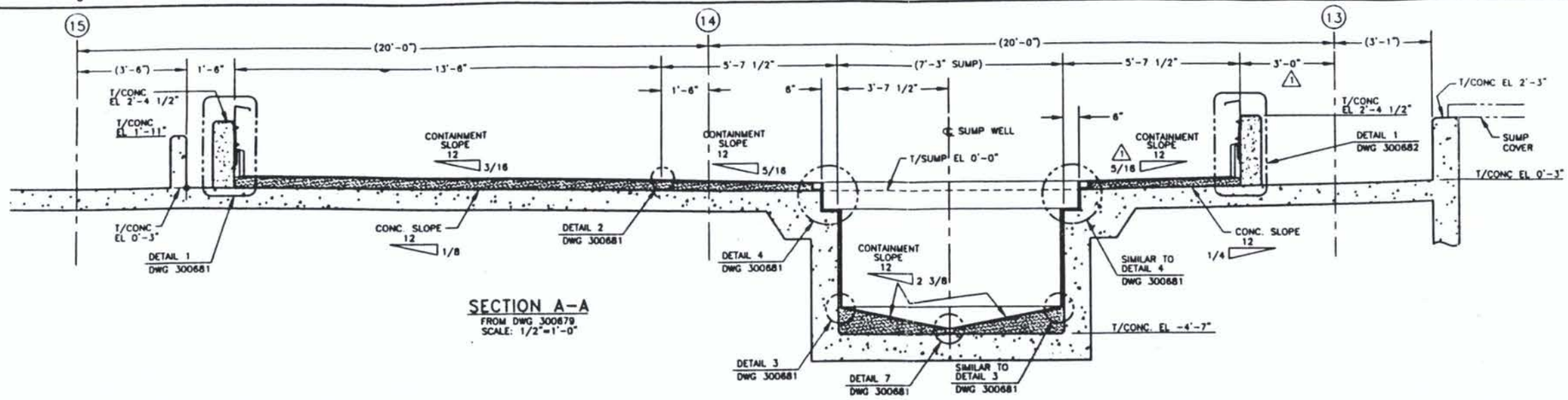

SECTION A-A
FROM DWG 300679
SCALE: 1/2"=1'-0"

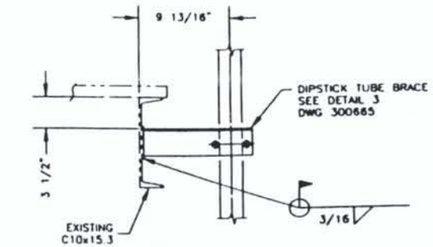

SECTION E-E
SCALE: 1 1/2"=1'-0"

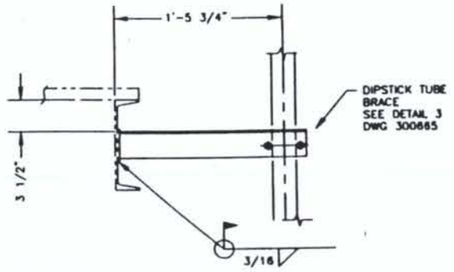

SECTION F-F
SCALE: 1 1/2"=1'-0"

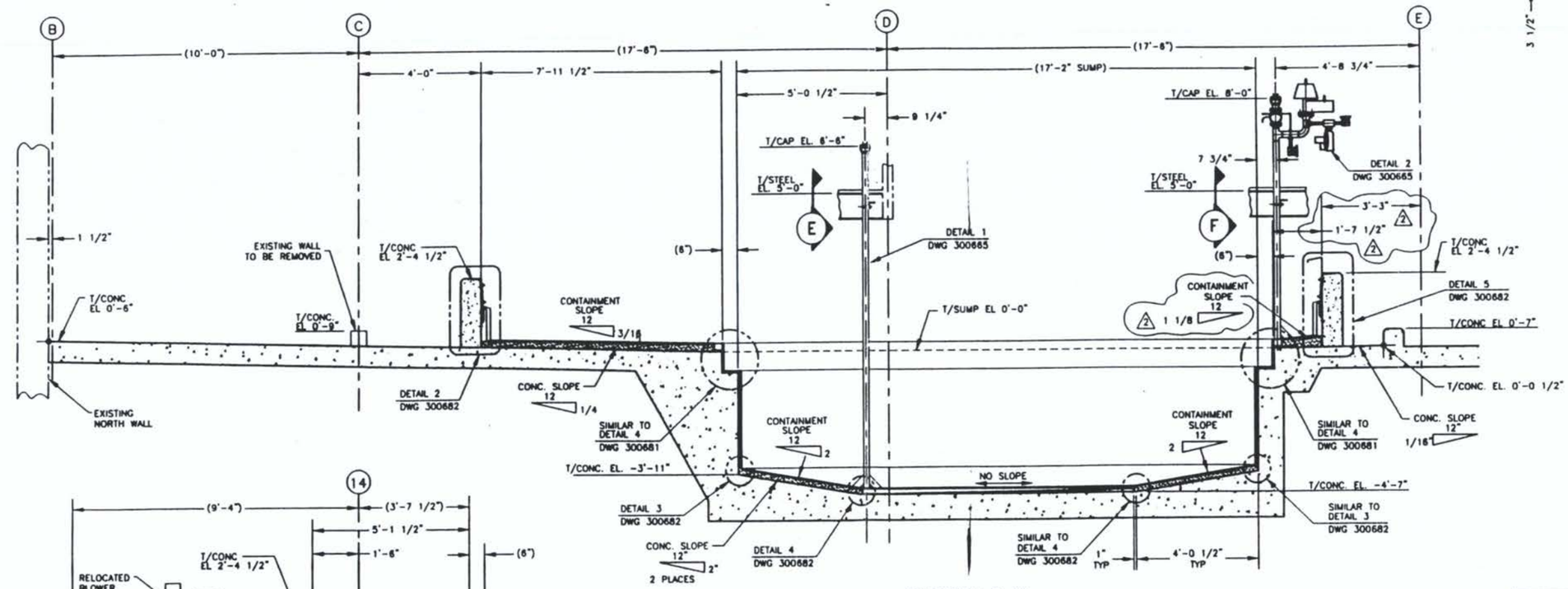

SECTION B-B
FROM DWG 300679
SCALE: 1/2"=1'-0"

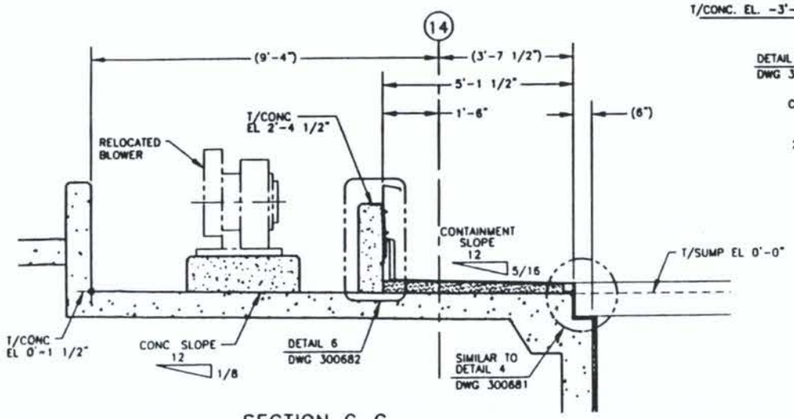

SECTION C-C
FROM DWG 300679
SCALE: 1/2"=1'-0"

REVISED & ISSUED FOR CONSTRUCTION

NOTES:

1. FOR GENERAL NOTES & STANDARD WELDING NOTES, SEE DRAWING 300663.
2. FOR INSTALLATION INSTRUCTIONS, SEE DRAWING 300679.

REVISION APPROVAL RECORD					REV 2
DISCIPLINE	REVIEWED	DATE	DISCIPLINE	REVIEWED	DATE
CIVIL			PIPING		
STRUCTURAL	FW	8-3-99	ELECTRICAL		
HVAC			ARCHITECTURAL		
MECHANICAL	CTL	8/5/99	INST & CONTROL		
PROCESS			ENVIRONMENTAL		
NUCLEAR			GEN. ARRANG.		

PROFESSIONAL ENGINEER REGISTERED 7807 STATE OF IDAHO C. THOMAS LOTKO II 8/5/99

Day Chem Engineers & Constructors
A Construction of Design and JCM

DRAWING STATUS				
STATUS	REV	DATE	SDE	PEM
FOR APPROVAL	A	10/29/98	SKB	CTL
APPROVED FOR CONSTRUCTION	0	4/9/99	SKB	CTL
REVISED & APPROVED FOR CONSTRUCTION	2	8/5/99	CTL/FW GKB	CTL

NOT APPROVED FOR CONSTRUCTION UNLESS SIGNED & DATED
DESTROY ALL PRINTS BEARING EARLIER DATE &/OR REV NO

NK	ZONE	REVISIONS	DATE	BY	APVD.
2		DIM. 3'-3" WAS 2'-9", 1'-7 1/2" WAS 2'-1 1/2"	8/3/99	CLT	CTL
		SLOPE 1 1/8 WAS 13/16			
1		DIM 3'-0" WAS 1'-9", SLOPE 5/16 WAS 1/4	4/22/99	CLT	SKB
0		ISSUED FOR CONSTRUCTION	4/9/99	CLT	SKB

FMC — PHOSPHORUS CHEMICAL DIVISION
FMC CORPORATION
POCATELLO, IDAHO — FMC

REFERENCE DRAWINGS	
300663	POG MECH DWG INDEX
395098	ARRG SUMP V-3400
395075	SECS & DETS, #3 FUR
395074	SECS & DETS, #3 FUR
391769	F3 PHOS SUMP COVER
32536	F2 & F3 PHOS SUMP

CSL C98-03 SCALE NOTED

THIS PRINT AND ALL INFORMATION THEREON IS OUR PROPERTY, IS CONFIDENTIAL AND MUST NOT BE MADE PUBLIC OR COPIED UNLESS AUTHORIZED BY US. IT IS SUBJECT TO RETURN ON DEMAND
PHOSPHORUS CHEMICAL DIVISION

POINT OF GENERATION
FURNACE #3
WASTE WATER COLLECTION
SUMP V-3400
CONTAINMENT SECTIONS

DRAWN MDR 7-22-98 APPROVED
CHECKED SKB 4-5-99 APPROVED

DRAWING IDENTIFIER				
PLANT	SITE	DRAWING NO	DISC	REV
P	F3	300680	M	2

1 PRINT DATE

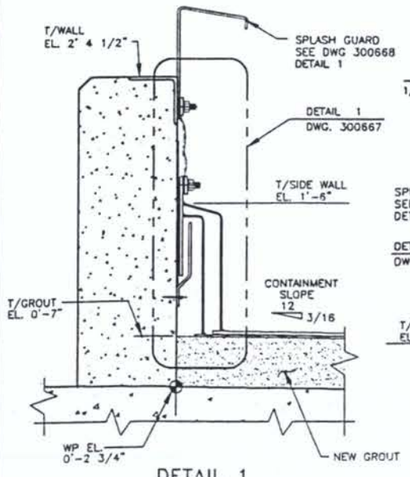

DETAIL 1
FROM DWG 300680
SCALE: 2"=1'-0"

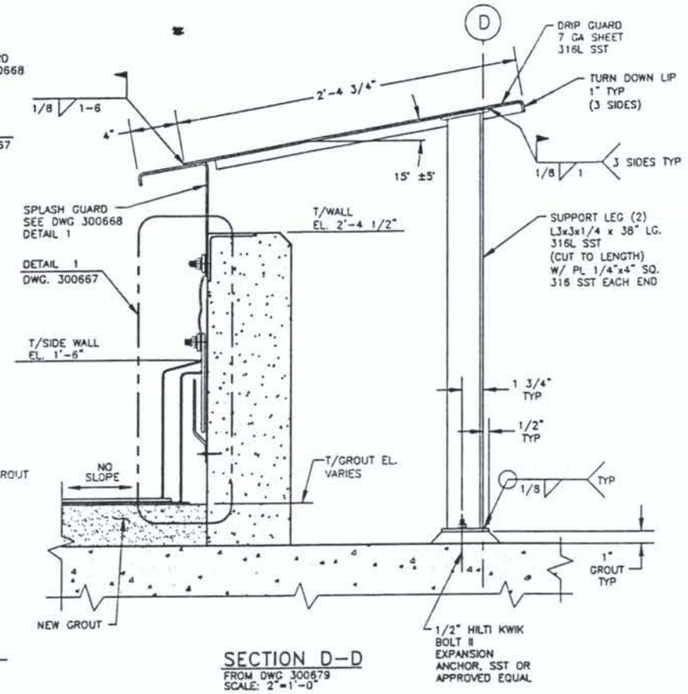

SECTION D–D
FROM DWG 300679
SCALE: 2"=1'-0"

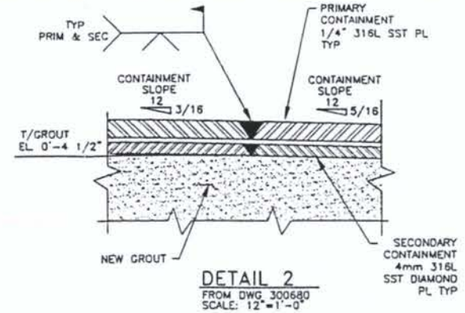

DETAIL 2
FROM DWG 300680
SCALE: 12"=1'-0"

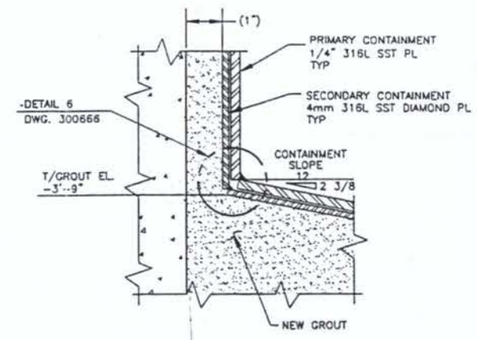

DETAIL 3
FROM DWG 300680
SCALE: 6"=1'-0"

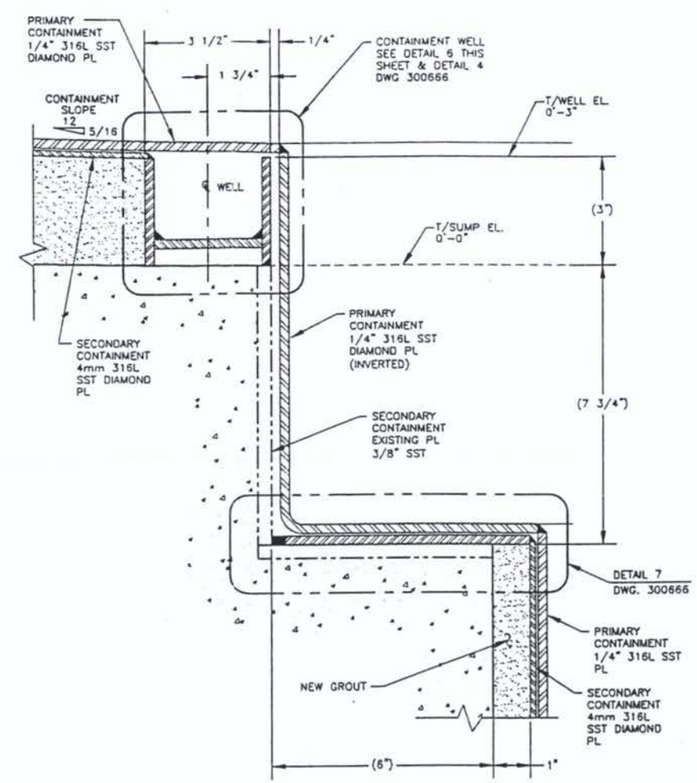

DETAIL 4
FROM DWG 300680
SCALE: 6"=1'-0"

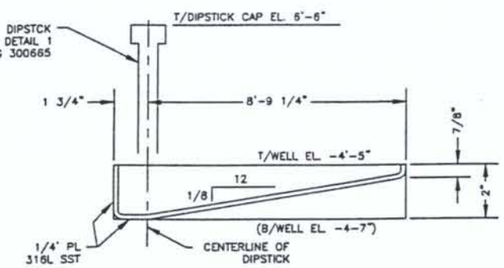

SUMP WELL LAYOUT – DETAIL 5
@ CENTER OF WELL
NO SCALE

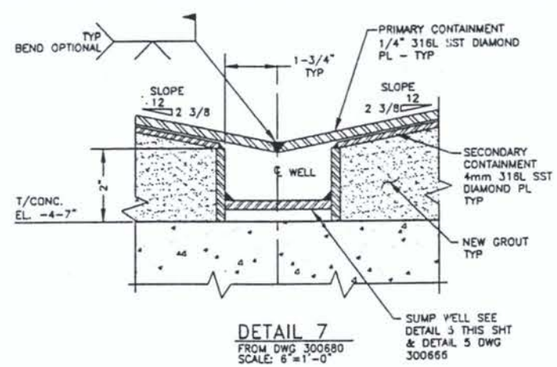

DETAIL 7
FROM DWG 300680
SCALE: 6"=1'-0"

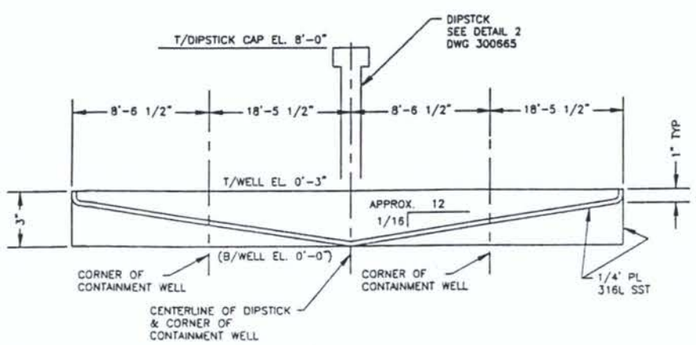

CONTAINMENT WELL LINEAR LAYOUT – DETAIL 6
@ CENTER OF WELL
NO SCALE

ISSUED
FOR
CONSTRUCTION

NOTES:

1. FOR GENERAL NOTES & STANDARD WELDING NOTES, SEE DRAWING 300663.
2. FOR INSTALLATION INSTRUCTIONS, SEE DRAWING 300679.

REVISION APPROVAL RECORD					REV
DISCIPLINE	REVIEWED	DATE	DISCIPLINE	REVIEWED	DATE
CIVIL			PIPING		
STRUCTURAL			ELECTRICAL		
HVAC			ARCHITECTURAL		
MECHANICAL			INST & CONTROL		
PROCESS			ENVIRONMENTAL		
NUCLEAR			GEN. ARRANG.		

Bechtel
Engineers & Constructors
A Consolidation of Bechtel and OG&E

DRAWING STATUS				
STATUS	REV	DATE	SDE	PEM
FOR APPROVAL	A	10/29/98	SKB	CTL
APPROVED FOR CONSTRUCTION				
REVISED & APPROVED FOR CONSTRUCTION				

NOT APPROVED FOR CONSTRUCTION UNLESS SIGNED & DATED. DESTROY ALL PRINTS BEARING EARLIER DATE &/OR REV. NO.

MK	ZONE	REVISIONS	DATE	BY	APVD.
0		ISSUED FOR CONSTRUCTION	4/9/99	CLT	SKB

PHOSPHORUS CHEMICAL DIVISION
FMC CORPORATION
POCATELLO, IDAHO

REFERENCE DRAWINGS	
300663	POG MECH DWG INDEX
395073	PLAN–CONC./DRAINAGE
395075	SECS & DETS, #3 FUR
395074	SECS & DETS, #3 FUR
300679	V–3400 PLAN

CHR C98–03 SCALE NOTED

THIS PRINT AND ALL INFORMATION THEREON IS OUR PROPERTY, IS CONFIDENTIAL AND MUST NOT BE MADE PUBLIC OR COPIED UNLESS AUTHORIZED BY US. IT IS SUBJECT TO RETURN ON DEMAND.
PHOSPHORUS CHEMICAL DIVISION

POINT OF GENERATION
FURNACE #3
WASTE WATER COLLECTION
SUMP V–3400
CONTAINMENT DETAILS SH 1

DRAWN MDR 7-22-98 APPROVED
CHECKED SKB 4-5-99 APPROVED

DRAWING IDENTIFIER

PLANT	SITE	DRAWING NO	DISC	REV
P	F3	300681	M	0

PRINT DATE

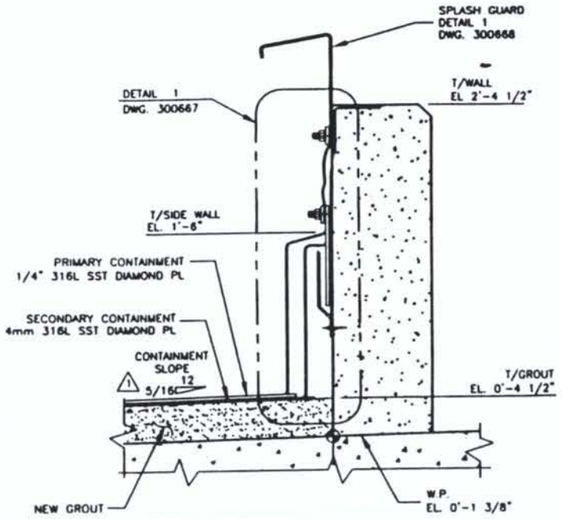

DETAIL 1
FROM DWG 300680
SCALE: 2"=1'-0"

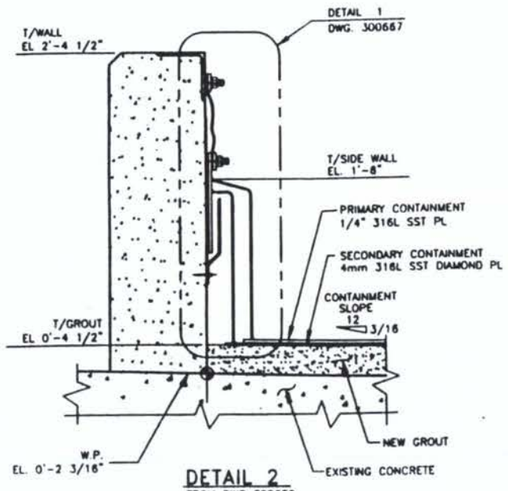

DETAIL 2
FROM DWG 300680
SCALE: 2"=1'-0"

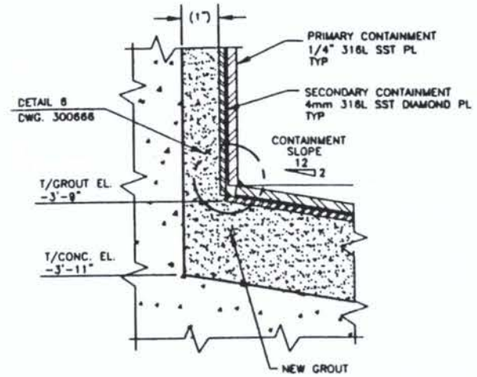

DETAIL 3
FROM DWG 300680
SCALE: 6"=1'-0"

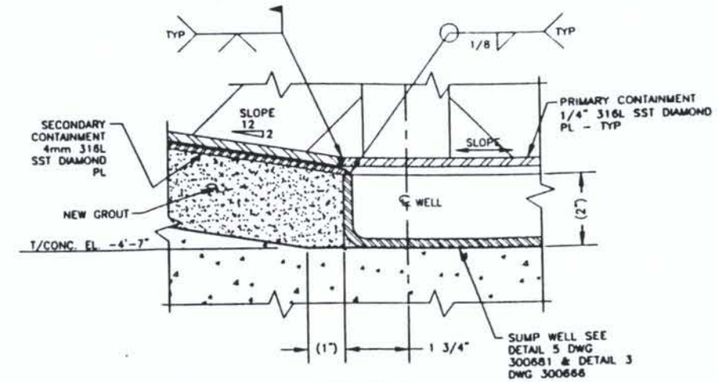

DETAIL 4
FROM DWG 300680
SCALE: 6"=1'-0"

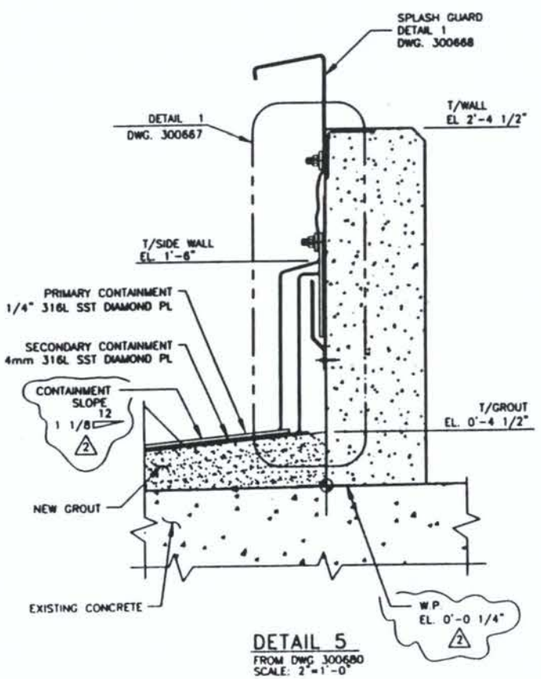

DETAIL 5
FROM DWG 300680
SCALE: 2"=1'-0"

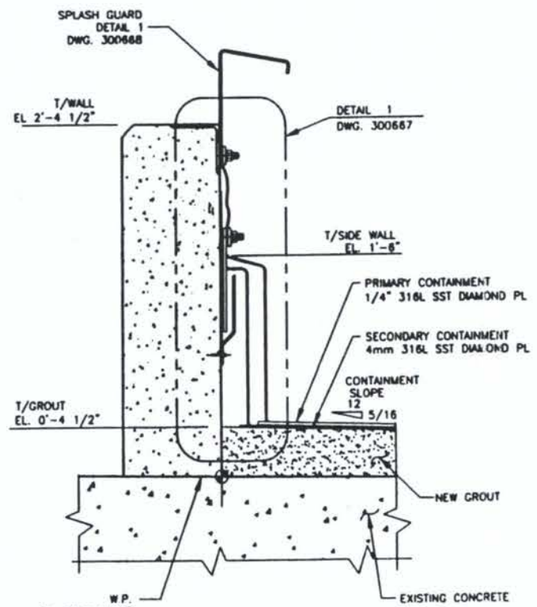

DETAIL 6
FROM DWG 300680
SCALE: 2"=1'-0"

REVISED & ISSUED FOR CONSTRUCTION

PROFESSIONAL ENGINEER REGISTERED C. Todd Pierce 7667 8/4/99 STATE OF IDAHO THOMAS LOVELL

NOTES:

1. FOR GENERAL NOTES & STANDARD WELDING NOTES, SEE DRAWING 300663.
2. FOR INSTALLATION INSTRUCTIONS, SEE DRAWING 300679.

REVISION APPROVAL RECORD						REV 2
DISCIPLINE	REVIEWED	DATE	DISCIPLINE	REVIEWED	DATE	
CIVIL			PIPING			
STRUCTURAL	FN	8-4-99	ELECTRICAL			
HVAC			ARCHITECTURAL			
MECHANICAL	CTL	8/4/99	INST & CONTROL			
PROCESS			ENVIRONMENTAL			
NUCLEAR			GEN. ARRANGE.			

Day Dream Engineers & Consultants
a Construction & Design and AE&C

DRAWING STATUS				
STATUS	REV	DATE	SDE	PEM
FOR APPROVAL	A	10/29/98	SKB	CTL
APPROVED FOR CONSTRUCTION	0	4/8/99	SKB	CTL
REVISED & APPROVED FOR CONSTRUCTION	2	8/4/99	CTL Eng SKB	CTL

NOT APPROVED FOR CONSTRUCTION UNLESS SIGNED & DATED
DESTROY ALL PRINTS BEARING EARLIER DATE &/OR REV NO

MK	ZONE	REVISIONS	DATE	BY	APVD
2		W.P. EL. 0'-0 1/4" WAS 0'-1 3/8", SLOPE 1 1/8 WAS 13/16	8/3/99	CLT	CTL
1		W.P. EL. 0'-1 3/8" WAS 0'-1 3/4", SLOPE 5/16 WAS 1/4	4/22/99	CLT	SKB
0		ISSUED FOR CONSTRUCTION	4/8/99	CLT	SKB

FMC — PHOSPHORUS CHEMICAL DIVISION
FMC CORPORATION
POCATELLO, IDAHO — FMC

REFERENCE DRAWINGS	
300663	POG MECH DWG INDEX
395073	PLAN-CONC /DRAINAGE
395075	SECS & DETS, #3 FUR
395074	SECS & DETS, #3 FUR
300679	V-3400 PLAN

CDS-03 — NOTED — SCALE

THIS PRINT AND ALL INFORMATION THEREON IS OUR PROPERTY IS CONFIDENTIAL AND MUST NOT BE MADE PUBLIC OR COPIED UNLESS AUTHORIZED BY US. IT IS SUBJECT TO RETURN ON DEMAND
PHOSPHORUS CHEMICAL DIVISION

POINT OF GENERATION
FURNACE #3
WASTE WATER COLLECTION
SUMP V-3400
CONTAINMENT DETAILS SH 2

DRAWN MDR 10-29-98 — APPROVED
CHECKED SKB 4-5-99 — APPROVED

DRAWING IDENTIFIER

PLANT	SYS	DRAWING NO	DISC	REV
P	F3	300682	M	2

PRINT DATE

Raytheon Engineers & Constructors

FMC

FMC - RAYTHEON ALLIANCE
RECORD OF TELEPHONE CONVERSATION

DATE: 8-10-99
TIME: 2:00 pm
PAGE 1 OF 1
TELECON NO. RAT -020

FROM: K Snow-McGregor	TO: Steve Wolf
COMPANY: Raytheon	COMPANY: FMC
PHONE: 2245	PHONE: (208) 236-8318
FMC ALLIANCE PROJECT NO.: 96096.088	
SUBJECT: Containment Requirement for Waste Water Sumps	

TOPICS OF CONVERSATION:

Steve Wolf informed me that the waste water sump containment requirement be defined as a precipitator bottom drop volume. Plant experience has been that a precipitator bottom drop volume typically is 3000 gallons. Steve said that 4000 gallons should be used as the containment volume required for this event on the waste water sumps, with the additional 1000 gallons as a safety factor.

APPENDIX 3
SUMP FOUNDATION

APPENDIX 3 SUMP FOUNDATION

CONCRETE SPECIFICATIONS AND STANDARDS

ACI 318-95 - Building code requirements for structural concrete (Copy not included)
ACI-318R-95 - Commentary (Copy not included)

B05.00T - Specification for Concrete Construction, Rev 2

CONCRETE FOUNDATION DRAWINGS

300646 – Furnace #3 Concrete Drainage Containment Plan Ground Floor, Rev 2
300647 – Furnace #2 & #3 Concrete Drainage Containment Section & Details, Rev 1

SUMP FOUNDATION ASSESSMENT
Calculation 13-088-17, POG Furn # 3 Wastewater Sump Fdn – V-3400, Rev 0
Calculation 13-088-16, POG Furn # 6 Wastewater Sump Fdn – V-2400, Rev 0

DAMES & MOORE, GEOTECHNICAL INVESTIGATION
Geotechnical Investigation N2 and Hollow Electrode Plants, Nivember 3, 1994

Project Number: 96096.XXX

Specification No: B05.00T

Facility: Phosphorus Chemicals Division

Location: Pocatello, Idaho

FMC CORPORATION

FMC WESTERN ALLIANCE

SPECIFICATION

FOR

CONCRETE CONSTRUCTION

RAYTHEON ENGINEERS & CONSTRUCTORS
DENVER, COLORADO

Status: Revised Approved for Construction Revision No. 2 Date: 3/10/99

		Rev. Approval	
F. J. Vissat Originator	7/1/97 Date	2	3-10-99 Date
R. V. Owen Checker	7/2/97 Date	2	3-10-99 Date
F. J. Vissat Supervision Discipline Engineer	7/1/97 Date	2	3-10-99 Date
D.G. Nold Project Engineering Manager	7/2/97 Date		3/16/99 Date
J. R. Weir Project Quality Engineer	7/3/97 Date		3-11-99 Date
L. Hammermeister Client Approval	7/3/97 Date	2	3-11-99 Date

Raytheon Engineers & Constructors

SPECIFICATION
REVISION PAGE

Client	FMC CORPORATION	Project No.:96096.XXX
Facility:	PHOSPHORUS CHEMCIALS DIVISION	Spec. No.:B05.00T
Location:	POCATELLO, IDAHO	Discipline:Structural

SPECIFICATION

FOR

CONCRETE CONSTRUCTION

This page is a record of all revisions of the specification. Each time the specification is revised, only the new or revised pages are issued. The description of each revision is briefly noted below

Status	Rev. No.	Date	Revised By	Pages	Description
Initial Issue	0	7/9/97	FJV	All	Approved for Construction
RAFC	1	2/10/99	FJV	1,3,4,8, 28,39	General Revisions
RAFC	2	3/10/99	FJV FJV	33	Rev. Conc. Temperatures

Distribution:

See Project Matrix

PROFESSIONAL ENGINEER REGISTERED 7670 3-10-99 STATE OF IDAHO FLOYD J. VIRAT

F:\FMCALL\SPEC\B0500T.W60

TABLE OF CONTENTS

SECTION PAGE

1. SCOPE 1

2. ENVIRONMENTAL CONDITIONS 1

3. REFERENCES AND STANDARDS 1

4. MATERIALS 5
   - 4.1. Cement 5
   - 4.2. Aggregates 5
   - 4.3. Water 5
   - 4.4. Reinforcement 5
   - 4.5. Reinforcement Accessories 6
   - 4.6. Expansion and Control Joint Material 6
   - 4.7. Void Form 7
   - 4.8. Form Oil 7
   - 4.9. Waterstops 7
   - 4.10. Curing Materials 7
   - 4.11. Floor Hardener 8
   - 4.12. Forming 8
   - 4.13. Embedded Items 8
   - 4.14. Epoxy Material 9
   - 4.15. Fly Ash 9
   - 4.16. Concrete Color Pigments 9
   - 4.17. Vapor Barrier 9

5. DESIGN OF CONCRETE MIX AND CONCRETE SUPPLY 10
   - 5.1. General 10
   - 5.2. Maximum Size of Coarse Aggregate 10
   - 5.3. Proportioning of Ingredients 10
   - 5.4. Strengths 10
   - 5.5. Slump 11
   - 5.6. Correction of Proportions 12
   - 5.7. Air-Entraining Agent 12
   - 5.8. Water-Reducing and Set-Controlling Admixtures 12
   - 5.9. High Range Water Reducing Admixture (Plasticizer) 12
   - 5.10. Fly Ash 13
   - 5.11. Concrete Uniformity 13
   - 5.12. Mixing and Delivery 13
   - 5.13. Fibrous Reinforced Concrete 14

6. INSTALLATION 14
   - 6.1. Subgrade 14
   - 6.2. Cold Joints 15
   - 6.3. Cleaning 15

6.4. Inspection Prior to Placement 15
6.5. Ground Water 16
6.6. Access 16
6.7. Formwork 16
6.8. Form Removal 18
6.9. Shoring 19
6.10. Reshoring 19
6.11. Tolerances 20
6.12. Reinforcing Steel 20
6.13. Concrete Covering over Steel Reinforcement 21
6.14. Supports 22
6.15. Splicing of Welded Wire Fabric 22
6.16. Embedded Items 22
6.17. Anchor Bolts 23
6.18. Depositing Concrete 24
6.19. Consolidation 25
6.20. Retempering 26
6.21. Construction Joints 26
6.22. Expansion and Control Joints 27
6.23. Waterstops 27
6.24. Bonding 27
6.25. Concrete Finishes 28
6.26. Protection and Curing 30
6.27. Cold Weather Requirements 32
6.28. Normal and Hot Weather Requirements 34
6.29. Attachment of Bolts or Dowels to Hardened Concrete 34
6.30. Clean-Up 35

7. TESTING AND INSPECTION 35
7.1. Subgrade Density 35
7.2. Concrete Strength Testing 35
7.3. Slump Tests 37
7.4. Inspection 37

8. HANDLING AND STORAGE 38
8.1. Reinforcement 38
8.2. Embedded Items 38
8.3. Accessories 38

9. DOCUMENTATION 38
9.1. Concrete Placement Clearance 38
9.2. Material Specifications 38
9.3. Concrete Mix Design 39
9.4. Fabricated Item Shop Details 39

1. SCOPE

1.1. The Subcontractor shall supply all materials, equipment, labor, tools and facilities to construct the concrete work in accordance with the scope of the Contract and the contract Drawings. This part of the specification covers the technical requirements for the concrete materials and mix design, forming materials, reinforcing, embedded items, and curing materials as well as the technical requirements for mixing, transporting, forming, placement, curing and finishing of concrete and the technical requirements for the installation of reinforcing steel and embedded items.

1.2. The Subcontractor shall be responsible for making all arrangements for and furnishing, his own concrete, and shall be responsible for the concrete meeting the necessary requirements, including but not limited to: strength; durability; water-cement ratio; workability; pumpability (where required); cement type and quality; aggregate size, gradation and quality; slump; admixtures; and entrained air content.

2. ENVIRONMENTAL CONDITIONS

2.1. The site of the work is located in Pocatello, Idaho. It is considered to be a Uniform Building Code Seismic Zone 3.

2.2. The nominal elevation of the plant site is 4,480 feet above mean sea level.

2.3 The Design Wind Pressures shall be based upon a 70 miles per hour Basic Wind Speed, Exposure C, and an Occupancy Category per the project in accordance with the Uniform Building Code.

2.4. The maximum temperature extremes for design purposes are from -17°F to 94°F.

3. REFERENCES AND STANDARDS

3.1. The issue in effect on ~~May 21, 1997~~January 27, 1999 (unless indicated otherwise) of the following codes, specifications, standards and publications, with applicable supplements and revisions thereto, form a part of this Specification by reference as if published in full content.

3.1.1. American Society for Testing Materials (ASTM)

A 36 Specification for Structural Steel.

A 82 Specification for Steel Wire, Plain, for Concrete Reinforcement.

A 108 Specification for Steel Bars, Carbon, Cold-Finished, Standard Quality.

A123 Specification for Zinc (Hot-Galvanized) Coatings on Iron and Steel Products.

A 153 Specification for Zinc Coating (Hot-Dip) on Iron and Steel Hardware.

A 185	Specification for Steel Welded Wire Fabric, Plain, for Concrete Reinforcement.
A 307	Carbon Steel Externally Threaded Standard Fasteners.
A 525	Specification for General Requirements for Steel Sheet, Zinc-Coated (Galvanized) by the Hot-Dip Process.
A 563	Specification for Carbon and Alloy Steel Nuts.
A 615	Specification for Deformed and Plain Billet-Steel Bars for Concrete Reinforcement.
A 706	Specification for Low-Alloy Steel Deformed Bars for Concrete Reinforcement.
A 775	Specification for Epoxy-Coated Reinforcing Steel Bars.
C 31	Making and Curing Concrete Test Specimens in the Field.
C 33	Specifications for Concrete Aggregates.
C 39	Test Method for Compressive Strength of Cylindrical Concrete Specimens.
C 42	Method of Obtaining and Testing Drilled Cores and Sawed Beams of Concrete.
C 94	Specification for Ready-Mixed Concrete
C 138	Method of Test for Unit Weight, Yield and Air Content (Gravimetric) of Concrete.
C 143	Method of Test for Slump of Portland Cement Concrete.
C 150	Specification for Portland Cement.
C 171	Sheet Materials for Curing Concrete.
C 172	Method of Sampling Freshly Mixed Concrete.
C 192	Method of Making and Curing Concrete Test Specimens in the Laboratory.
C 231	Method of Test for Air Content of Freshly Mixed Concrete by the Pressure Method.
C 260	Specification for Air-Entraining Admixtures for Concrete.
C 309	Liquid Membrane-Forming Compounds for Curing Concrete.

C 309 Liquid Membrane-Forming Compounds for Curing Concrete.

C 311 Test Methods for Sampling and Testing Fly Ash or Natural Pozzolans for Use as a Mineral Admixture in Portland Cement Concrete.

C 494 Specification for Chemical Admixtures for Concrete.

C 618 Specification for Fly Ash and Raw or Calcined Natural Pozzolan for Use as a Mineral Admixture in Portland Cement Concrete.

C 685 Specification for Concrete Made by Volumetric Batching and Continuous Mixing.

C 920 Specification for Elastomeric Joint Sealants.

C 1017 Specification for Chemical Admixtures for Use in Producing Flowing Concrete.

D 1190 Concrete Joint Sealer, Hot-Poured Elastic Type

D 1751 Preformed Expansion Joint Fillers for Concrete Paving and Structural Construction (Non-extruding and Resilient Bituminous Types).

D 1752 Preformed Sponge Rubber and Cork Expansion Joint Fillers for Concrete Paving and Structural Construction.

F 436 Specification for Hardened Steel Washers.

F1554 Specification for Anchor Bolts, Steel, 36, 40 and 105-ksi yield strength.

3.1.2. American Concrete Institute (ACI)

117 Tolerances for Concrete Construction and Materials

301 Specifications for Structural Concrete for Buildings

305 Specification for Hot-Weather Concreting

306 Specification for Cold-Weather Concreting

315 Manual of Standard Practice for Detailing Reinforced Concrete Structures

318 Building Code Requirements for Structural Concrete

347 Concrete Formwork

4. MATERIALS

4.1. Cement

4.1.1. Except as otherwise specified, cement shall be Portland cement conforming to ASTM C 150, Type II, modified for low alkali.

4.1.2. Cement shall be stored to prevent caking, partial setting, deterioration or contamination. Cement which has any deleterious characteristics shall not be used in the mix.

4.2. Aggregates

4.2.1. Coarse aggregate shall conform to ASTM C 33. See Section 5.2. for maximum size of coarse aggregate.

4.2.2. Fine aggregate shall be sand, clean and sharp. Fine aggregate shall conform to ASTM C 33.

4.2.3. Aggregates shall be stored and handled so as to preserve the gradation and cleanliness of the material. Segregation and/or contamination are cause for rejection and the deficient material shall be removed and replaced.

4.3. Water

Water used in mixing concrete shall be clear, clean and potable, with no unusual taste or odor.

4.4. Reinforcement

4.4.1. Materials

a. Reinforcing steel bars shall conform to the requirements of ASTM A 615, Grade 60 except for bars that are indicated on the Drawings to be welded shall be ASTM A 706. Steel bars shall be deformed except for sizes less than 3/8-inch and specified dowels or spirals.

b. Spiral reinforcing shall conform to the requirements of ASTM A 82 and smooth dowels shall be ASTM A 36 steel.

c. Welded wire fabric shall conform to the requirements of ASTM A 185. Unless specified otherwise, the material shall be furnished only in flat sheets.

d. Fibrous concrete reinforcement shall be 100% virgin polypropylene fibrillated fibers specifically manufactured for use as concrete reinforcement, containing no reprocessed olefin

materials. Fibrous concrete reinforcement shall be as manufactured by Fibermesh Company. The length of the fibers shall be as recommended by the manufacturer of the fibrous reinforcement for each mix design.

4.4.2. Detailing and Fabrication

a. Reinforcing steel shall be detailed and fabricated in accordance with, and to the tolerances of, ACI 315 unless otherwise noted on the engineering design Drawings.

b. Reinforcing as delivered shall be free of loose mill scale, loose rust, paint, grease, oil, dirt, mud or any other foreign material which will prevent or reduce bonding.

c. Fabricated reinforcement shall be free of twists, kinks or unscheduled bends. Such defects shall be cause for rejection.

d. Reinforcing shall be bent cold without inducing fractures or cracking in the steel.

4.5. Reinforcement Accessories

4.5.1. Bar supports, tie wire and accessories shall be supplied by the Subcontractor.

4.5.2. Bar supports of standard types and sizes shall conform to the Concrete Reinforcing Steel Institute Specifications. Where concrete will not be exposed to view, Class 3 bright basic bar supports may be used. Where concrete will be exposed to view, Class I plastic protected supports shall be used. Special support systems shall be designed by the Subcontractor and submitted to the Subcontractor for review. If the reinforcement is galvanized or coated, the supports shall also be galvanized or coated.

4.5.3. Tie wire shall be black annealed wire, not less than No. 16 gauge, of suitable quality for securing reinforcement in place. If reinforcement is galvanized or coated, then tie wire shall be galvanized, plastic coated or epoxy coated wire as appropriate.

4.6. Expansion and Control Joint Material

4.6.1. Bituminous type expansion joint filler shall be preformed, non-extruding and resilient conforming to ASTM D 1751.

4.6.2. Non-bituminous type expansion joint filler shall be preformed, non-extruding and resilient conforming to ASTM D 1752.

4.6.3. Hot poured joint sealing compound shall conform to ASTM D 1190.

4.6.4. Cold applied joint sealing compound shall conform to ASTM C 920.

4.6.5. Caulking compounds shall be "Sikaflex" one-component polyurethane as manufactured by SIKA Corporation, or equal. `Sikaflex-1CSL', self-leveling, shall be used for Horizontal Joints and `Sikaflex-1a', gun-grade, shall be used for vertical and overhead joints. Primer shall be as recommended by sealant manufacturer. Color shall be limestone.

4.6.6. Backing rod shall be round, preformed, resilient material such as "Ethafoam" as manufactured by Dow Chemical Company or equal. The diameter shall not be less than one and one-half times the width of the joint in which it is to be installed.

4.6.7. Joint caps shall be 'Snap-Cap', made of high impact PVC, as manufactured by W. R. Meadows or equal.

4.7. Void Form

Void form materials used to bridge footing loads over underground pipes or structures or for expansive soils shall be Denform "K-Void" as manufactured by K.C. Construction Supply Company or equal.

4.8. Form Oil

Form release agent shall be a commercial product of proven performance that will prevent adhesion of the concrete to the forms and will not penetrate, stain or adversely affect concrete surfaces. The material shall not impede wetting of concrete surfaces to be damp cured nor impair subsequent surface treatments which depend upon bond or adhesion.

4.9. Waterstops

Waterstops shall be extruded polyvinyl-chloride of the size and shape specified on the Drawings. Waterstops shall be as manufactured by Greenstreak Plastic Products Co. or an approved equal.

4.10. Curing Materials

4.10.1. Waterproof paper, polyethylene sheeting, or polyethylene-coated burlap shall conform to ASTM C 171. Burke Security Blankets or equal is a suggested material.

4.10.2. Liquid membrane-forming curing compound shall conform to ASTM C 309, Type 1-D, Class B. Wax base or wax-resin base curing compounds will not be permitted.

4.10.3. Curing compounds which will stain or alter the natural concrete color shall not be permitted.

4.11. Floor Hardener

Liquid-applied floor hardener shall be Sonneborn "Lapidolith" or an approved equal fluosilicate type floor hardener.

4.12. Forming

Form materials shall be as specified under Section 6 of this Specification.

4.13. Embedded Items

4.13.1. Anchor bolts shall be as shown on the Drawings, and shall conform to the requirements of ASTM F1554, Grade 36. Nuts shall be ASTM A 563, Grade A, heavy hex. Washers shall conform to ASTM F 436. Plate washers shall be ASTM A 36 material.

4.13.2. Structural steel embedments shall be as shown on the Drawings, shall be fabricated from ASTM A 36 plates, bars and shapes to the configuration shown on the Drawings and shall conform to the requirements of the American Institute of Steel Construction (AISC). Embedments shall be blast cleaned in accordance with SSPC-6 "Commercial Blast Cleaning." Surfaces of embedments which will not come in contact with the concrete, except surfaces which will receive welding, shall be prime painted with one shop coat of oil alkyd paint. The paint system shall be "Kem-Kromik Universal Metal Primer"; B50N2Z6 as manufactured by Sherwin-Williams or engineer approved equal. Surfaces which will come in contact with the concrete and surfaces which will receive welding shall be protected with a solvent removable rust-proof coating.

a. Embedded trench and curb angles shall be provided complete with floor plate or grating when shown on the Drawings.

4.13.3. Steel pipe embedments shall be standard Schedule 40 black pipe fabricated to the configuration as shown on the Drawings. Pipe embedments shall receive surface treatment as in paragraph 4.13.2 above.

4.13.4. Weldable steel stud connectors shall be ASTM A 108 by Nelson Stud Welding Company or Engineer approved equal and of the automatic-end-weld type of the size and length shown on the Drawings. Studs shall not be painted.

4.13.5. Welding electrodes for carbon steel materials shall have a 70,000 psi minimum tensile strength and comply with Table 4.1, AWS D1.1.

4.13.6. Miscellaneous embedded items, which are manufacturer's standard items shall be as shown on the Drawings, or an Engineer approved equal. Standard items shall have a zinc coating conforming to ASTM A123, A153 or A525.

4.13.7. Abrasive stair nosing shall be Wooster Cast Iron, No. 101 ferrogrit, or Engineer approved equal, 3 inches wide, with concrete anchors and standard black finish.

4.13.8. Cast iron floor drains shall be as shown on the Drawings.

4.14. Epoxy Material

Epoxy bonding agents adhesives or grout shall be Sikadur as manufactured by the Sika Chemical Corporation, or Engineer approved equal. Type and grade shall be as shown on the Drawings for each particular application.

4.15. Fly Ash

4.15.1. Class F or Class C fly ash may be used in the concrete to be used on this project. The fly ash shall meet the requirements of ASTM C618, "Standard Specification for Fly Ash and Raw or Calcined Natural Pozzolan for use as a Mineral Admixture in Portland Cement Concrete", and shall be tested in accordance with ASTM C311, "Standard Test Methods for Sampling and Testing Fly Ash or Natural Pozzolans for Use as a Mineral Admixture in Portland Cement Concrete."

4.15.2. All fly ash used on the project shall be from one source and its quality shall be monitored throughout the duration of its use.

4.15.3. Fly ash shall be stored as a cementious material per Section 4.1.2

4.15.4. The maximum percentage of cement to be replaced by flyash shall be 20%.

4.16. Concrete Color Pigments

Synthetic red oxide coloring shall be used to color the concrete protecting electrical duct banks. Quantities of coloring added to concrete mix shall be as recommended by the manufacturer of the color pigment.

4.17. Vapor Barrier

Vapor barrier shall be polyethylene, single film, 6.0 mil thickness, black in color. Lap joints shall be sealed using an adhesive of the type recommended by the vapor barrier manufacturer.

5. DESIGN OF CONCRETE MIX AND CONCRETE SUPPLY

5.1. General

All concrete shall be ready-mixed concrete manufactured and delivered in accordance with the requirements of ASTM C 94, Option C. The concrete manufacturer shall assume the responsibility for the design of the concrete mix or mixes. Design of the concrete mixes to fulfill job requirements shall comply with ACI 301 and may be done either on the basis of previous field experience on trial mixtures or new trial mixtures. Proportioning of the new concrete mix shall not be done based on empirical data. The design of the concrete mix shall be in accordance with ACI 211.1 to attain the properties of strength, slump, entrained air, and water-cement ratio in conformance with the following requirements.

5.2. Maximum Size of Coarse Aggregate

Coarse aggregate shall be No. 67 (3/4 inch to No. 4) for concrete classes BSA and CSA. Coarse aggregate for concrete classes BLA and CLA shall be No. 467 (1½ inch to No. 4).

5.3. Proportioning of Ingredients

5.3.1. The proportion of ingredients shall be selected to produce the proper placeability, pumpability, durability, strength and other required properties, and shall be such as to produce a mixture which will work readily into the corners and angles of the forms and around reinforcement by the methods of placing and consolidation employed on the work, but without permitting the materials to segregate or excessive free water to collect on the surface.

5.3.2. The determination of the water-cement ratio to attain the required strength and/or durability shall be in accordance with ACI 301 and with ACI 211.1. The maximum water-cement ratio for concrete which will be subjected to special exposure conditions or exposed to sulfate containing solutions shall be in accordance with ACI 318, Chapter 4. The maximum water cement ratio for all other concrete shall be 0.50.

5.4. Strengths

5.4.1. Concrete mixes shall be designed for the minimum compressive strengths, aggregate size and air content as listed hereafter:

Designation	28 Day Strength	Maximum Size Aggregate	Percent of Entrained Air
Class ASA	5000 psi	3/4"	6.0% ± 1.5%
Class ALA	5000 psi	1 1/2"	5.5% ± 1.5%
Class BSA	4000 psi	3/4"	6.0% ± 1.5%
Class BLA	4000 psi	1 1/2"	5.5% ± 1.5%
Class CSA	3000 psi	3/4"	6.0% ± 1.5%
Class CLA	3000 psi	1 1/2"	5.5% ± 1.5%
Class D (Lean Concrete)	2000 psi	3/4"	------

5.4.2. Special Classes

a. Pea-gravel aggregate, 3000 psi at 28 days, to be designated as CPG (an "A" suffix for air entrainment may be used as required. If used, air content shall be between 6% and 7.5% with a tolerance of ± .5%).

b. Sand-cement, 5000 psi at 28 days, shall be referred to on the Drawings as "S-C Grout".

c. The suffix "F" added to the concrete designation shall indicate fibrous reinforced concrete.

5.5. Slump

Except where otherwise indicated on the Drawings, concrete mixes shall be designed for the following slumps. Slumps shall be measured in the field at the point of discharge from the transport vehicle one slump test per truck, and shall be tested in accordance with ASTM C 143 and shall be within the following limits:

TYPE OF CONSTRUCTION	SLUMP IN INCHES MAXIMUM	MINIMUM
Reinforced Foundation Walls and Footings	4	1
Plain Footings and Substructure Walls	3	1
Drilled Piers	7	5
Beams and Reinforced Walls	4	1
Building Columns	4	1
Pavement Slabs	3	1
Mass or Mat Concrete	2	1
Filling Piles	6	4

5.6. Correction of Proportions

Prior to concreting operations, the Subcontractor shall establish minimum standards of proportions of all the types of concrete to be used on the project. Concrete operations shall proceed with these mix designs, but if at any time the tests of job concrete indicate failure to meet the strength, slump, and air entrainment requirements, the Subcontractor shall be required to change the standard proportions to meet the requirements.

5.7. Air-Entraining Agent

5.7.1. All concrete shall be air entrained unless otherwise noted on the drawings. Air content by volume shall be in accordance with 5.4.1 above and shall be determined in accordance with ASTM C 231. Air content shall be based on measurements made in concrete mixtures at points of discharge from the truck at the jobsite.

5.7.2. Air entrainment shall be produced by adding an air entraining agent at the mixer. Air entraining agent shall conform to ASTM C 260. The agent and the cement proposed for use shall be selected well in advance of concrete placing, and the Subcontractor shall provide satisfactory facilities for ready procurement of adequate test samples.

5.8. Water-Reducing and Set-Controlling Admixtures

5.8.1. A water-reducing admixture shall be used (ASTM C 494, Type A). At the option of the Subcontractor, a water-reducing admixture which retards the time of set may be used (ASTM C 494, Type D).

5.8.2. Water reducing admixtures shall conform to the requirements of ASTM C 494. Admixtures shall be used in strict accordance with the manufacturer's recommendations and shall be accompanied by the services of the qualified field representative of the manufacturer to supervise the use thereof. The Subcontractor and concrete producer shall submit a certificate from an approved laboratory attesting that the admixture equals or exceeds the physical requirements of ASTM C 494, Type A or D as applicable.

5.9. High Range Water Reducing Admixture (Plasticizer)

5.9.1. At the option of the Subcontractor, a high range water reducing admixture, conforming to ASTM C 494 Type F and ASTM C1017, may be used. The concrete mix shall be specifically designed for the use of a plasticizer to maintain homogeneity of the flowing concrete. Plasticizers may only be added at the site of the pour and must be used in strict accordance with, and under the supervision of, the manufacturer of the admixture.

5.9.2. The use of high range water reducers shall be limited to those placements which require that concrete be pumped a long distance or which would be difficult to place at the normal slump.

5.10. Fly Ash

Class F or Class C fly ash may be used in the concrete to be used on this project. The fly ash shall meet the requirements of ASTM C618, "Standard Specification for Fly Ash and Raw or Calcined Natural Pozzolan for use as a Mineral Admixture in Portland Cement Concrete", and shall be tested in accordance with ASTM C311, "Standard Test Methods for Sampling and Testing Fly Ash or Natural Pozzolans for Use as a Mineral Admixture in Portland Cement Concrete". If a fly ash admixture is to be used, the establishment of the concrete mix design shall include the use of fly ash and determine the amount of fly ash which may be used to obtain the specified concrete properties and strengths. Any deleterious effects from the use of fly ash shall be reported in writing with the mix design submittal.

5.11. Concrete Uniformity

Concrete mixers to be used in the performance of the work of this project shall be tested by the Subcontractor for their ability to deliver a uniform mix throughout the batch. This testing shall be in accordance with the requirements of ASTM C 94, Annex A1, Concrete Uniformity Requirements. Mixers not meeting the requirements of ASTM C 94 Annex A1 shall not be used until the condition causing the non-uniformity has been corrected and the mixer re-tested.

5.12. Mixing and Delivery

5.12.1. Scheduling

Subcontractor alone shall be responsible for scheduling the class(es) of concrete needed, slump and additives required, and the start, duration and rate of concrete deliveries necessary to meet the Subcontractor's construction needs.

5.12.2. Cold Weather Conditions

Concrete mixed and delivered when the mean ambient temperature is 40°F or less, shall be mixed and delivered in accordance with ACI 306.

5.12.3. Hot-Weather Conditions

Concrete mixed and delivered when the mean ambient temperature (as defined in ACI 301, Section 8.4.3.) would be detrimental to concrete, shall be mixed and delivered in accordance with ACI

5.12.4. Time Limit Between Mixing and Placement

Discharge and placement of each load of concrete shall be complete within forty-five (45) minutes after addition of water to the mix when hot weather conditions prevail. At other times, the time limit shall be ninety (90) minutes.

5.12.5. Delivery Tickets

Each load of concrete shall be accompanied by a delivery ticket, in triplicate, showing at least the information prescribed by Paragraph 16.1 of ASTM C 94. After each load of concrete has been discharged or the truck has been released, one copy of each delivery ticket shall be grouped with other delivery tickets for that pour, for delivery to the Contractor.

5.12.6. Rejection of Concrete

Deliveries of concrete which has excessive slump, or has commenced its initial set before or during discharge, or is otherwise detectable as not meeting specification requirements, shall be rejected by the Subcontractor and shall not be placed in the work.

5.13. Fibrous Reinforced Concrete

5.13.1. Add fibrous concrete reinforcement to concrete materials at the time concrete is batched and at the rate recommended by the manufacturer.

5.13.2. Mix batched concrete in strict accordance to the fibrous concrete manufacturer's instructions and recommendations for uniform and complete dispersion.

5.13.3. Provide the services of a qualified technical representative from the fibrous reinforcement manufacturer, or an authorized dealer, to instruct the concrete supplier in proper batching and mixing of materials.

6. INSTALLATION

6.1. Subgrade

6.1.1. The subgrade shall be undisturbed soil, rock or compacted structural fill free of any loose material. The soil density shall be tested for compaction in compliance with The Project Specifications or compaction specified on the Drawings.

6.1.2. When concrete is placed on soil, provision will be made to eliminate moisture from the concrete being absorbed by the soil either by use of polyethylene sheeting or wetting of the soil; however, the soil shall not be muddy, or have standing water.

6.1.3. Under adverse conditions, the foundation material may be over-excavated and filled with lean concrete.

6.1.4. The subgrade shall be finished to smooth even contours conforming to the sections and grade elevations called for on the Drawings.

6.2. Cold Joints

6.2.1. Existing hardened concrete surfaces shall be roughened by sandblasting, water blasting or air-tooled and cleaned by air or water jet to expose a good surface of well bonded aggregate.

6.2.2. Hardened concrete surfaces on which new concrete is to be placed shall be kept wet for 24 hours previous to the pour. Pools of free-standing water shall be removed and a neat cement mortar having about the same proportion of cement to sand as the new concrete shall be well brushed into the surface just prior to placing the new concrete. This mortar shall not be allowed to dry out or harden before the new concrete is placed.

6.2.3. Some existing concrete surfaces may require special bonding as specified on the Drawings. Bonding agents shall be applied in accordance with Section 6.24.4 of this Specification.

6.3. Cleaning

6.3.1. All debris, foreign material, ice and snow shall be cleaned from the interior of forms, trenches or excavations. No concrete will be placed on or against frozen soil or subgrade unless a written procedure is submitted to the Engineer for approval.

6.3.2. Forms, reinforcement and embedded items shall be free of all dirt, oil and foreign material including hardened or dried concrete or curing compound splashed on them from previous concrete placements.

6.4. Inspection Prior to Placement

6.4.1. The terms "shall be", "shall have been", "shall be checked" or "shall be verified" will mean the work has been performed with the knowledge of and to the satisfaction of, or under direct supervision of the Contractor.

6.4.2. Formwork, placement of reinforcement and embedded items shall have been checked for dimensions, elevations, location and tolerances prior to placing concrete.

6.4.3. Formwork shall have been checked for design, shoring and adequacy in accordance with Section 6.7 of this Specification.

6.4.4. Reinforcement shall have been checked for proper size, positioning, tying and support in accordance with Section 6.12 of this Specification, the Drawings and reinforcement placing drawings.

6.4.5. Embedded items shall have been checked for adherence to the Drawings, locations and adequate fastening to the forms or templates in accordance with Sections 6.16 and 6.17 of this Specification.

6.4.6. All equipment required for the placing of concrete in the work shall have been properly cleaned and the operation of mechanical equipment checked for reliability to perform its intended use.

6.4.7. All materials used in construction of the work shall have been verified as being in accordance with the Drawings, this Specification and the referenced specifications.

6.4.8. The compliance with all sections of this specification, shall have been inspected and approved by the Contractor before any concrete is placed.

6.5. Ground Water

When flowing water is encountered, it shall be pumped or diverted away from the excavation to avoid washing of the fresh concrete during placement operations. If this method is not possible, then the water should be allowed to rise to a static no-flow condition and the concrete placed by tremie.

6.6. Access

The Subcontractor shall have provided adequate access walkways, safety barricades and facilities, and adequate access ways for concrete delivery vehicles or conveyances. Under no circumstances will concrete chutes or conveyances be supported on reinforcing steel.

6.7. Formwork

6.7.1. The Subcontractor shall be responsible for designing and providing suitable and adequate formwork to meet the safety requirements and the required quality of the finished work. The material to be used for formwork shall be selected by the Subcontractor as being the most suitable for the specific work involved. The formwork shall conform to the shapes, lines, elevations and dimensions of concrete shown on the Drawings. The latest issue of ACI 347 "Guide to Formwork for Concrete" shall be used as a guide.

6.7.2. Formwork shall be designed to resist all loads and forces which it may be subjected to, safely and without distortion. Dead loads are to be taken as the weight of formwork including shoring and bracing, reinforcement, embedded items and the weight of wet concrete to a minimum of 150 pounds per cubic foot, with due regard to admixtures

and rate of placing. Live loads are to include, but not be limited to, the weight of workmen, placing equipment, storage of materials, runways, impact and wind loads.

6.7.3. The Subcontractor shall prepare drawings for the construction and assembly of formwork including shoring, bracing, guying, tying and reshoring as required. The drawings shall show details for the work such as, but not limited to, the following:

Materials, concrete placing methods and openings, rate of placing, sequence and schedule for placing, provisions for adjustment during placement, camber, anchors, ties, shores and bracing, scaffolds and runways, construction joints, foundations for formwork, and all details pertinent to forming the concrete as shown on the Drawings.

The formwork drawings shall indicate the time for removal of formwork and shall show design and details of reshoring required for the work.

6.7.4. The Subcontractor's design and drawings are subject to review and/or approval by the Contractor or the Engineer. The review and/or approval of the design and drawings in no way relieves the Subcontractor of his responsibility of providing suitable and adequate formwork for the concrete work.

6.7.5. The forms shall be constructed, shored, braced and tied to maintain their position and shape during and after placing concrete. They shall be sufficiently tight to prevent leakage of mortar. The forms shall have adequate stiffeners, wales and braces to prevent noticeable deflection or waviness. Forms shall be sufficiently rigid to limit deflection under the weight of wet concrete to 1/8 inch. Forms for beams, floor slabs and similar members shall be constructed with a camber in order that deflection due to the weight of forms, reinforcing, and wet concrete shall be approximately zero after forms are removed.

6.7.6. The forms shall be constructed so that exposed concrete will have smooth surfaces free from offsets, fins or other unsightly defects. Forms which are reused shall be thoroughly cleaned of dirt, hardened concrete or undesirable adhering substances and they shall be patched, repaired and finished to a smooth surface without broken or chamfered corners.

Form release agent shall be applied to the form surfaces before placing reinforcement or embedments. Application is to be in accordance with the manufacturer's recommendations.

6.7.7. Form ties shall be factory fabricated, removable or snap-off ties, fixed or adjustable in length, and shall not have devices that will leave a hole larger than one inch in diameter in the surface of the concrete. The

portion of the tie remaining in the concrete after removal of the exterior parts shall be at least one inch back from the surface of the concrete. All holes in the surface of the concrete from ties shall be filled with cement mortar.

Hydraulic structures or other structures requiring watertightness shall have form ties furnished with waterstops.

All form ties are subject to approval of the Contractor.

6.7.8. Openings or other devices shall be provided to permit depositing concrete in a manner which will prevent segregation or accumulations of hardened concrete on forms or reinforcement above the concrete level.

Temporary openings shall be provided in forms at the base of columns and at the bottom of walls to facilitate cleaning and inspection. These openings shall be securely closed prior to placing concrete.

6.7.9. The corners of all exposed concrete shall have a chamfer of 3/4 inch unless otherwise noted on the Drawings. The forms shall be provided with chamfer strips, except where it can be troweled or at the top of piers where it can be formed in the grout.

6.8. Form Removal

6.8.1. Forms shall be designed and constructed for removal without damage to concrete.

6.8.2. Forms and shoring shall not be removed until the concrete has attained sufficient strength to support its own weight and any construction or storage loads to which it may be subjected. The use of criteria in this Specification or in referenced specifications shall not relieve the Subcontractor of responsibility for the complete safety of or damage to the structure.

6.8.3. The mix design ingredients (such as type of cement, fly-ash, curing additives) and the curing procedures (including temperature), shall be considered in determining the strength of the concrete. The times given below do not apply to cold weather concreting and are minimum times for removal of forms only. Curing shall continue as specified in Section 6.26.

a. Structures such as footings, mats, equipment piers and pile caps where form removal induces no stress in the concrete; the forms may be removed 12 hours after completion of placement.

b. Structures such as columns, walls or sides of beams for which the forms do not provide vertical support; the forms may be removed 24 hours after completion of placement, or when the concrete has attained 500 psi minimum compressive strength.

c. For all other form removal the strength attained the stresses from loads the structure may be subjected to and the complete safety of the structure shall be evaluated.

6.8.4. If form removal is critical to the construction schedule and the safety of the structure is questionable, compressive strength control tests shall be used as evidence that concrete has attained sufficient strength to permit removal of supporting forms. Cylinders required for the control tests will be in addition to those required for standard compressive strength testing. The control test cylinders will be removed from the molds after 24 hours and stored in the structure where they will be cured in the same manner as the structure. The cylinders shall be tested as near the end of the form removal period as is practical. The forms shall not be removed until the control test strength has been calculated to be sufficient to withstand the stresses to which the structure may be subjected.

6.8.5. No concrete section shall be loaded earlier than twenty eight (28) days after placement without approval of the Contractor. Loads shall not exceed those permitted by the Contractor at any concrete age.

6.9. Shoring

6.9.1. The structural support for formwork shall be designed and constructed in conformance to criteria given in the design and construction sections of this Specification as well as conforming to referenced specifications and publications.

6.9.2. If settlement is a possibility then shoring shall be provided with adjustment devices so that allowable deflections and tolerances can be monitored and maintained during placement and curing of the concrete.

6.9.3. The shoring shall not be removed until the structure can safely withstand the loads it may be subjected to.

6.10. Reshoring

6.10.1. The structure shall be reshored if the formwork is removed before 28 days or the concrete has not attained the full design strength and the structure is to be subjected to loading in excess of the structure's reduced strength capacity.

6.10.2. Concrete which has cured for 28 days or has attained the full design strength and is to be subjected to storage or construction loads in excess of the loads for which it was designed shall be reshored to safely withstand the loading to which it is to be subjected.

6.10.3. Retaining walls and structures having compacted backfill placed against them shall be shored to resist the compaction and vibration loads during backfilling operations.

6.11. Tolerances

6.11.1. Tops of piers, pedestals and equipment foundations shall be ± 1/4 inch within specified elevation and with a variation from level of 1/4 inch in any 10 feet.

6.11.2. Finished floor slabs shall be a true plane within 1/4 (*) inch in 10 feet, as determined by a 10-foot straight edge placed anywhere on the slab in any direction unless special finish tolerances are noted on the Drawings.

(*) May be 5/16 inch for concrete slabs on metal decking.

6.11.3. The tolerance of all concrete work shall be suitable to accommodate all equipment and machinery for which it was intended.

6.11.4. All other tolerances shall be in accordance with ACI 117, Tolerances for Concrete Construction and Materials.

6.12. Reinforcing Steel

6.12.1. Installation of reinforcing steel and welded wire fabric shall be in accordance with ACI 318 and the Drawings. Reinforcing steel shall not be bent or straightened in a manner injurious to the steel. Bars with kinks or bends not indicated on the Drawings shall not be used in the work. The use of heat to bend or straighten reinforcing steel is authorized only if approved in advance by the Contractor.

Before placement, reinforcing steel shall be thoroughly cleaned of loose or flaky rust, mill scale, or coatings of any foreign substance that would reduce or destroy the bond. Reinforcing steel reduced in section shall not be used in the work. Steel shall be placed where indicated on the Drawings. In the event of a substantial work delay, previously placed reinforcing steel left for future bonding shall be inspected and cleaned. Field splices, if required, shall be made with a wire-tied lap of not less than the number of bar diameters indicated in ACI Code 318 for the proper class of splice as shown on the Drawings. As an alternate, mechanical connectors used in strict conformance to the manufacturer's recommendations may be used with prior approval of the Engineer in lieu of the lapped and tied splices.

6.12.2. The clear distance between parallel bars, except in columns, shall be not less than the nominal diameter of the bars, 1-1/3 times the maximum size of the coarse aggregate, or 1 inch, whichever is greater. Where reinforcement in beams or girders is placed in two (2) or more layers, the clear distance between parallel layers shall not be less than 1 inch, and the bars in the upper layers shall be placed directly above those in the bottom layer.

6.12.3. Reinforcing steel over "K-Void" fibre or equal forms shall be supported on rods driven into the ground beneath the K-Void, or upon slab bolsters over steel plates resting on the K-Void. Plate areas and thicknesses shall be such that the K-Void is not crushed under the combined weight of wet concrete and reinforcing steel.

6.12.4. Welding shall not be performed on reinforcing steel unless shown on the Drawings.

6.12.5. Prior to placing any reinforcing in thick mats (i.e., over 2'-0" thick), the Subcontractor shall design an adequate reinforcing steel support system to hold reinforcing for these mats to proper position as shown on the Drawings. The Contractor will inspect and/or review Subcontractor's support system prior to placing the reinforcing steel.

6.13. Concrete Covering over Steel Reinforcement

6.13.1. The thickness of the concrete covering over steel reinforcement shall not be less than the diameter of the round bars and in the following specific instances, not less than specified below:

Footings and other principal structural members in which concrete is deposited against the earth or void forms.	3 inches between earth or void forms
Mats on lean concrete mud slabs	2 inches
Structures where surfaces are in contact with water plus freezing and thawing.	3 inches
Concrete surfaces which, after removal of forms, are exposed to earth or weather:	
For bars No. 6 and larger	2 inches
For bars No. 5 and smaller	1-1/2 inches
Where surfaces are not directly exposed to earth or weather:	

For slabs and walls for No. 11 and smaller	3/4 inches
For beams, girders and tied columns	1-1/2 inches

6.14. Supports

6.14.1. Reinforcement shall be securely held in position by spacers, chairs, or other approved supports. The type, number and spacing shall conform to ACI 315. They shall be plastic tipped where the finished concrete will be exposed.

6.14.2. Reinforcement shall be securely tied at intersections and splices, as required by the CRSI's "Manual of Standard Practice for Reinforced Concrete Construction", to maintain their position during work by other trades and during concrete placement. Tying shall be done using black annealed wire, with wire tie ends pointing away from the form. Tack welding of reinforcing or of reinforcing steel assemblies shall not be permitted.

6.14.3. When mats and footings are cast on mud slabs, the reinforcing may be supported on spacers or chairs; however, when slabs, mats or footings are cast on grade the reinforcing shall be supported on precast concrete blocks or other approved device. Such supports shall be spaced at intervals required by the reinforcing size to maintain the specified minimum concrete cover over the steel bars.

6.15. Splicing of Welded Wire Fabric

6.15.1. End laps shall be avoided in mid-span and support areas of structural slabs; end cross-wires shall be overlapped by at least two cross-wires plus two inches, but not less than six inches.

6.15.2. In non-structural slabs, and in structural slabs at points laying between 1/10 and 1/4 of the span from a support, end cross-wires shall be overlapped at least two inches, unless noted otherwise on the Drawings.

6.15.3. Side laps shall be 1/2 spacing of longitudinal wires.

6.16. Embedded Items

6.16.1. Prior to placement of concrete and during formwork operations, the Subcontractor shall properly locate and set all items to be placed in the forms or set into the concrete; such as but not limited to anchor bolts, conduit, pipe sleeves, floor drains, drain piping, curb angles, weld plates and inserts. The Subcontractor shall be responsible for securely fastening and supporting all embedded items shown on the Drawings and to the dimensions as shown thereon.

6.16.2. Prior to setting embedded items into the formwork, all rust-proof protective coatings which will come in contact with the concrete shall be removed by solvent cleaning.

6.16.3. Weld plates, inserts, and pipe sleeves shall be located within 1/4 inch of the location shown on the Drawings.

6.16.4. Cast iron floor drains shall be installed in floor slabs at the location and elevation shown on the Drawings.

6.17. Anchor Bolts

6.17.1. Anchor bolts and anchor bolt groups shall be supported and set using templates attached to the forms, and embedded ends securely tied to prevent displacement during placing of concrete. Tolerances from dimensions shown on the Drawing shall not exceed the following:

a. Bolt projection - plus 1/4 inch, minus 0 inch.

b. 1/8 inch center to center of any two bolts within an anchor bolt group, where an anchor bolt group is defined as the set of anchor bolts which receive a single fabricated steel shipping piece or equipment base.

c. 1/4 inch center to center of adjacent anchor bolt groups.

d. Maximum accumulation of 1/4 inch per hundred feet along the established column or plant control line of multiple anchor bolt groups, but not to exceed a total of 1 inch, where the established column line is the actual field line most representative of the centers of the as-built anchor bolt groups along a line of columns.

e. 1/4 inch from the center of any column or equipment anchor bolt group to the established column or plant control lines through that group.

f. The tolerances of paragraphs c., d., and e. apply to offset dimensions shown on the plans, measured parallel and perpendicular to the nearest established column line for individual columns shown on the plans to be offset from established column lines.

6.17.2. Unless shown otherwise, anchor bolts shall be set perpendicular to the theoretical bearing surface.

6.17.3. Welding to anchor bolts will not be permitted except where specifically shown on the Drawings.

6.17.4. Anchor bolt sleeves shall be plugged, capped, or otherwise securely closed to prevent entry of concrete, dirt, debris or water during subsequent construction. Packing or water shall not be permitted to freeze in anchor bolt sleeves. The use of anti-freeze in anchor bolt sleeves is prohibited.

6.17.5. Exposed anchor bolt threads shall be given a coat of grease and protected from corrosion or other damage to the threads.

6.18. Depositing Concrete

6.18.1. Concrete shall be conveyed and placed as rapidly as practical, either by manual or mechanical means that will prevent the segregation or loss of ingredients. No aluminum material shall be used to convey or place concrete. Concrete shall be deposited continuously in horizontal layers, in a manner to prevent displacing reinforcement and the accumulation of concrete on the forms or the reinforcement above the level of fresh concrete. Concrete that has attained its initial set or otherwise becomes unsuitable for placement, as established by the Contractor in accordance with ASTM C 94, shall not be placed in the work.

6.18.2. Chuting of concrete shall be permitted only upon approval by the Contractor. Chutes shall be of rounded cross-section to avoid accumulation of concrete in corners. The slopes of chutes shall be steep enough to permit flow without requiring a slump greater than that specified or required for placement (slope usually 1 vertical to 2 or 2-1/2 horizontal). In intermittent operations, when free movement of concrete in the chute is not possible, discharge the material from the chute into approved hoppers. Thoroughly clean all chutes and hoppers before and after each run. Wash water and debris shall be discharged outside of forms.

6.18.3. Where concrete is conveyed and placed by mechanically applied pressure, the equipment shall be suitable in kind and adequate in capacity for the work. The operation of the pump shall be such that a continuous stream of concrete without air pockets is produced.

When pumping is completed, the concrete remaining in the pipeline shall be ejected in such a manner that there will be no contamination of the concrete or separation of the ingredients. After this operation, the entire equipment shall be thoroughly cleaned.

6.18.4. Concrete shall be placed in the forms in uniform layers as nearly as practicable in final position. It shall not be allowed to fall freely more than 5 feet in unexposed work nor more than 3 feet in exposed work. Drop chutes shall be available in sufficient number so the concrete placement can be made in horizontal layers with little lateral concrete movement in the forms.

Concrete layers shall not exceed 2 feet in thickness and shall be thoroughly consolidated before the succeeding layer is placed. Timing of placement shall be such that each succeeding layer is placed before the preceding layer has reached its initial set.

6.19. Consolidation

6.19.1. During and immediately after placing, concrete shall be vibrated and worked to provide thorough consolidation around reinforcement, embedded items, and into corners of forms. It shall be consolidated with immersion-type vibrators having frequencies in the range of 3600 to 13,000 vibrations per minute. External vibrators mounted on or held against the forms will not be permitted.

6.19.2. After a level surface has been attained by inserting the vibrator into centers of high concrete points left during depositing, the vibrator should be inserted vertically at uniform spacings of about 12 to 24 inches such that the area visibly affected overlap previously vibrated material by a few inches.

6.19.3. The vibrator should penetrate rapidly through the full depth of each new concrete layer and about six (6) inches into any preceding fresh layer. The vibrator should be held in such position until consolidation is considered adequate (5 to 15 sec). The vibrator should then be withdrawn slowly at a rate of about three (3) inches per second. Concrete should move back into the space vacated by the vibrator. To prevent segregation of mix, vibration shall be continued only long enough to accomplish thorough consolidation and complete embedment of the reinforcement and fixtures.

6.19.4. Vibrators shall not be used as a means of moving concrete to a desired placement area. This action shall be accomplished by correct initial placement augmented by the use of hand shovels. The Subcontractor shall provide a sufficient number of vibrators so that consolidation can be accomplished immediately after the concrete has been deposited in the forms. Vibrators should not come in contact with forms, reinforcing or embedded items.

6.20. Retempering

Water shall not be added to mixed batches of concrete to increase the slump without specific approval of the Contractor. When batches delivered to the job show an unduly low slump (as might occur during hot weather) consideration shall be given to the use of retarders.

6.21. Construction Joints

6.21.1. The plans will show normal requirements for construction joints. Therefore, field work shall be planned so that a minimum number of field located construction joints are needed. The type, number, and location for such field established construction joints shall be reviewed by the Contractor.

6.21.2. Unless otherwise directed by the Contractor or shown on the Drawings, construction joints shall be located as follows:

a. In floor slabs on grade, construction joints shall be located on interior column lines or at the center of slab panels.

b. In concrete framed floors and roofs, construction joints shall be placed at the center of span in slabs, beams and girders, except where intersecting members occur at such points. In these cases, offset the construction joint a distance approximately equal to twice the width of the intersecting member and provide supplementary reinforcing as directed by the Contractor.

c. In steel framed floors and roofs, construction joints shall be placed at the centerlines of supporting members.

d. In columns, construction joints shall be placed at underside of floor or roof members and undersides of column capitals, haunches, or brackets.

e. Horizontal joints below grade and in one story walls above grade shall be avoided. If joints are necessary, they shall be located at well defined horizontal lines such as window sills or heads, or other well defined architectural trim lines.

f. When vertical joints are deemed necessary in flat wall surfaces, special care shall be exercised to prevent offsetting of adjacent wall faces.

6.21.3. The joint surfaces shall be perpendicular to the concrete surfaces in which they occur, whether the concrete is a wall, slab, mat, beam, or otherwise. Shearing forces across the joint may be carried by shear keys or web steel. Unless otherwise shown on the Drawings, reinforcing steel shall be continuous across the joints.

6.21.4. For joint preparation see Section 6.2, Cold Joints in this Specification.

6.22. Expansion and Control Joints

6.22.1. Expansion and Control joints shall be provided as located and detailed on the Drawings. Field changes as to either location or type shall be approved by the Contractor. The Subcontractor shall supply and install all material as specified in Section 4., Materials, of this Specification. All expansion and control joints shall be sealed. The maximum horizontal dimensions of concrete wall or floor slab sections placed at one time shall be 40 feet unless otherwise noted on the Drawings.

6.22.2. Expansion joints shall have keys or other mechanical devices to keep adjacent surfaces in alignment, and in accordance with details provided on the Drawings.

6.22.3. Control joints may be either formed and tooled or sawed. Care shall be taken in formed joints to not damage the form during placing of concrete or to not damage the concrete surfaces during removal of form. Saw cut joints shall be sawed within 24 hours after placing concrete and care shall be taken to avoid cutting reinforcement. Joints shall be a minimum of one third the depth of wall or slab.

6.23. Waterstops

6.23.1. Waterstops shall be provided in all cold joints for hydraulic structures and joints below grade where water is present. Joints where waterstops are provided shall have keys or other mechanical devices designed to prevent differential movement across the joints.

6.23.2. Waterstops shall be installed to produce a continuous diaphragm in each joint indicated on the Drawings or in field-located construction joints in slabs and walls as approved by the Contractor. Splices shall be made in accordance with the manufacturer's recommendations.

Waterstops shall be accurately secured in position and shall be protected from damage and displacement during concrete placement. Punctured or poorly spliced waterstops shall be repaired or replaced by and at the expense of the Subcontractor.

6.24. Bonding

6.24.1. Concrete on which other concrete is placed shall be either still plastic or thoroughly hardened, but not in a semi-hardened state that may be disrupted and weakened by the added load and the jarring due to placement of additional concrete.

6.24.2. To provide bond between successive lifts of concrete, the exposed surface of the hardened concrete shall be cleaned and roughened, without loosening the embedded aggregate. Brooms or air-water jets shall be used after the start of initial setting of the concrete. Sand-blasting or air-tooling shall be employed after the concrete has hardened. In all cases, the surface film and laitance or diluted paste shall be removed and a reasonably high percentage of aggregate exposed. Immediately before the new concrete is placed, the old surface shall be clean, damp and free from standing pools of water.

6.24.3. Batches of neat cement or of mortar having about the same proportion of cement to sand as used in the concrete, or as otherwise specified herein, shall be deposited and well brushed in, just ahead of the new concrete.

6.24.4. Where a more positive bond is required and where indicated on the Drawings, a two-part epoxy bonding compound shall be used to bond new concrete work to hardened or aged concrete surfaces. The surface preparation and application of the epoxy bonding compound shall be in accordance with the Manufacturer's recommendations and specifications.

6.25. Concrete Finishes

6.25.1. Repairing and Patching Formed Surfaces

a. Concrete surfaces shall be repaired immediately after form removal. Cavities produced by form ties, honeycomb, rockpockets, spalling or other similar defects shall be thoroughly cleaned and kept saturated with water for a period of at least one hour prior to repair. Before placing dry-pack or mortar, a grout of cement and water mixed to a consistency of paint shall be brushed into the surfaces to which the dry-pack or mortar is to be bonded. Repair of defective areas shall be in accordance with ACI 301~~, Chapter 9~~ Section 5.

b. Holes left by tie rods shall be hammer-packed with stiff, dry-pack mortar of the same materials as that in the concrete.

c. Honeycombed areas shall be removed to a depth at which sound concrete is exposed. Cut-out areas shall be straight at right angles to the surface, and filled with concrete matching that of the structure.

d. Spalled and pitted areas resulting from concrete sticking to the forms shall be chipped back to obtain a good mechanical bond, undercut at the edges, and repaired with mortar matching that of the concrete.

e. On concrete which will be exposed in finished work, approximately 20 percent white cement shall be mixed with the gray patching cement to offset the tendency of patches to show up darker than the surrounding concrete.

f. While defects are being repaired, the surface shall not be allowed to become dry, nor shall the underlying concrete be damaged. Patched areas shall be damp cured for seven days.

g. Finished repairs shall be subject to the approval of the Contractor. Unsatisfactory repairs shall be redone by and at the expense of the Subcontractor.

6.25.2. Finishes on Formed and Flat Concrete Surfaces

a. Formed concrete surfaces against which backfill will be placed, and which will therefore be concealed in the finished work, shall have a rough form finish with all tie rod holes packed, and all defects repaired. No other finishing will be required. Rough form finish shall be in accordance with ACI 301, ~~Chapter 10~~ Section 5.

b. Unformed surfaces of foundations which will be backfilled and not exposed to view in the finished work shall be screeded to proper elevation followed by a darby or bull float. Surface cracking occurring prior to set of the concrete shall be closed by hand float.

c. Formed concrete surfaces which will be exposed in the finished work shall have a smooth form finish with all fins and burrs removed and ground smooth, all the rod holes packed and all defects repaired. Patches shall match the color of the surrounding surface and shall be smooth and level. No other finish will be required. Smooth form finish shall be in accordance with ACI 301, ~~Chapter 10~~ Section 5.

d. Interior floor surfaces which will remain exposed to view in the finished work shall be given a "Double Steel Troweled Finish", unless noted otherwise on the Drawings.

e. Roof slab surfaces, and floor slab surfaces to receive tile or other overlayment, shall be given a "Single Steel Troweled Finish."

f. Surfaces which will subsequently be grouted for support of column base plates, equipment, etc., shall be given a "Float Finish."

g. Unformed concrete surfaces other than slabs or floors, which remain exposed to view in the finish work shall be given a "Single Steel Troweled Finish."

h. Exterior slabs for paving, stoops, ramps and sidewalks shall be given a "Broomed Finish", unless otherwise noted on the Drawings.

6.25.3. "Float Finish" shall be accomplished by either wood, cork, or metal floats or by a finishing machine. After the concrete has been properly placed, vibrated, and roughly leveled, it shall be screeded off to the proper elevation. Coarse aggregate shall be tamped below the surface. After screeding and tamping of coarse aggregate, the surface shall be made uniform by means of a bull float. After floating, the surface shall be tested for uniformity by use of a straightedge. Variations from desired finished elevations shall not exceed 1/4 inch in ten feet. Use of neat cement to absorb excessive surface water is prohibited.

6.25.4. "Single Steel Troweled Finish" shall consist of a float finish followed by steel troweling. Steel troweling shall be performed after the surface moisture has disappeared. Concrete surfaces shall be steel troweled to a smooth, even finish, free from trowel marks.

6.25.5. "Double Steel Troweled Finish" shall consist of a single steel troweled finish with additional troweling to produce a smoother and harder or denser finish. Time shall be allowed to elapse between trowelings so that the concrete will set further. Final troweling shall result in a burnished appearance.

6.25.6. "Broomed Finish" shall be performed after the "Float Finish" by drawing a natural bristle broom across the surface to produce corrugations of regular appearance not over 1/16 inch deep. The fibers shall be kept clean by frequent washings and cake on the fibers shall not be allowed to score the surface.

6.26. Protection and Curing

6.26.1. Protection and curing shall be accomplished by preventing loss of moisture, rapid temperature change, mechanical injury, or damage from rain, frost or flowing water. Curing shall be started after placing and finishing as soon as the surface conditions are suitable. Curing of formed surfaces shall be accomplished by moist curing with forms in place for the full curing period, or, if forms are removed prior to the end of the curing period, by one of the following methods, or combinations thereof.

The minimum curing periods for concrete placed hereunder, except as noted in ACI 306, shall be:

Curing Temperature	Curing Period
50°F - 70°F	7 days
70°F - 100°F	5 days

a. Protective Wet Curing

The protective medium for wet curing shall consist of saturated cotton mats or a double layer of burlap, of sufficient size to cover the entire concrete surface and side forms. The mats or burlap shall be kept continuously wet during use. After finishing operations and prior to start of protective wet curing, the concrete surface shall be kept wet with adequate fog spraying equipment. During any change in curing medium, the concrete shall remain exposed for not more than one hour.

b. Moist Curing

Unformed surfaces shall be covered with burlap, cotton or other approved fabric mats kept in contact with the surface, or with sand, and shall be kept continually wet. Where formed surfaces are cured in the forms, the forms shall be kept continually wet. If the forms are removed before the end of the curing period, curing shall be continued as on unformed surfaces, using suitable materials. Burlap shall be in two layers.

c. Waterproof-Paper Curing

Surfaces shall be covered with waterproof paper with 4 inches of overlap at sides and ends and sealed with mastic or pressure-sensitive tape not less than 1-1/2 inches in width. The paper shall be weighted to prevent displacement, and tears or holes appearing during the curing period shall be immediately repaired by patching.

d. Membrane Curing

Pressure spray tinted curing compounds shall be of the type previously specified. The compound shall be applied according to the manufacturer's directions immediately after finishing operations are completed and forms removed. The quantity applied shall be sufficient to ensure the formation of a continuous unbroken film.

The curing compound shall cover the entire area of the exposed surface, and shall be applied in two separate applications, each of which shall be an even sweeping motion of the nozzle with sufficient overlap to ensure uniform and complete coverage. The second application shall follow five to thirty minutes after the first and shall be so directed as to cross and recross the sweep of the first application.

Curing compound shall not be used or permitted on surfaces where future bonding, concrete hardener, or painting is indicated. Such surfaces shall be cured by the moist process as specified previously.

After final application of the compound, surfaces shall be protected from traffic and other damage to the membrane for a period of curing as specified herein.

The use of any membrane material which will impart a slippery surface to the concrete or alter its natural color shall not be permitted. The compound, however, shall contain a dye of color strength sufficient to render the film distinctly visible on the concrete surface for a period of at least four hours after application and shall be of such character that it will harden within thirty (30) minutes.

If concrete surfaces which are to receive curing compound are expected to be exposed to freezing temperatures within five (5) days, the membrane curing compound shall not be used.

e. Polyethylene Sheeting and Polyethylene-Coated Waterproof Paper and Burlap

Surfaces shall be completely covered. Where a single sheet does not cover the entire surface, additional sheets shall be used. The ends and sides shall be lapped not less than four (4) inches and sealed with pressure-sensitive tape

6.26.2. Protection

The Subcontractor shall be fully responsible for protecting finished concrete work from damage, marring of finish, discoloration or other detrimental conditions during curing and subsequent construction operations.

After the curing periods specified, concrete shall not be allowed to heat or cool faster than at a rate of 5°F per hour, or 20°F per twenty-four hour period, until outside temperatures are achieved. Either dry or steam heat will be an acceptable means of maintaining temperature control.

6.27. Cold Weather Requirements

Concrete shall not be placed during cold weather unless special precautions are taken. Cold weather is defined as any period when, for more than three successive days, the mean daily temperature is, or is forecast to be, below 40° F or when any unformed concrete surface less than forty-eight (48) hours in age is, or is forecast to be, exposed to temperatures less than 32° F. If it is necessary to place concrete under conditions of low temperature, placement and protection methods shall be in accordance with this Section and ACI 306.

Concrete damaged by freezing shall be removed and replaced by and at the expense of the Subcontractor.

6.27.1. Concrete temperatures and curing periods shall conform to the following charts:

a. Concrete temperature* as delivered:

Ambient Temperature	Minimum Placement Dimension: Less Than 12"	12"-36"	36"-72"	Larger Than 72"
Above 30°F	60°F	55°F	50°F	45°F
30°F to 0°F	65°F	50°F	55°F	50°F
Below 0°F	70°F	65°F	60°F	55°F

*Concrete temperature as delivered shall not exceed the above minimum concrete temperatures by more than 10°F.

b. Concrete temperatures as placed and maintained for curing period:

	Minimum Placement Dimension: Less Than 12"	12"-36"	36"-72"	Larger Than 72"
Min. Concrete Temp	55°F	50°F	45°F	40°F
Min. Curing Period (Days)	7	7	6	5
Max. Temp. of Concrete Surface or Form During Curing Period	80°F	75°F	70°F	65°F

6.27.2. Temperatures of forms, reinforcing, embedments or earth to be in contact with fresh concrete shall be at least 35°F but shall not exceed 60°F.

6.27.3. Enclosures shall be windproof, weatherproof and provide for the circulation of air in contact with concrete surfaces or forms.

6.27.4. Heating units shall be located so as not to heat or dry the concrete locally. Heaters shall be vented, if necessary, so that the concrete is not exposed to carbon dioxide. Open type or oil pot salamanders shall not be used.

6.27.5. Blanket or batt insulation shall be protected by a tough moisture proof cover from wind, rain or snow which will impair its insulating properties. Such insulation shall be lapped and kept in close contact with the concrete or formed surfaces.

6.27.6. Records of outside temperatures, weather conditions and concrete or form temperatures shall be maintained for the placements. Temperatures should be secured at several locations within enclosures, on the concrete or formed surfaces, and at corners and edges of forms or concrete to indicate the range of temperatures. Temperature data shall be submitted to the Contractor.

6.28. Normal and Hot Weather Requirements

6.28.1. For normal and hot weather concreting, when the requirements for cold weather concreting are not applicable, concreting shall be subject to the following.

6.28.2. Concrete temperatures as delivered shall be within the limits below.

	Minimum Placement Dimension	
	Less than 48"	48" or Larger
Maximum Concrete Temp.	80°F	70°F
Minimum Concrete Temp.	60°F	50°F

6.28.3. When air temperatures are expected to exceed 90°F during placing, finishing and the first twenty four (24) hours after finishing or when the rate of evaporation as determined by Figure 2.1.5 (ACI 305) is expected to exceed 0.2 lbs/ft^2/hr. during placing and finishing, precautionary measures shall be put into effect by the Subcontractor to prevent damage to concrete due to hot weather. Every effort shall be made to minimize the time of delivery, placing, consolidation and finishing. When the air temperature is expected to exceed 90°F within forty-eight hours after placement, all surfaces shall be protected from direct sunlight for a minimum period of forty-eight hours. If it is necessary to place concrete during hot weather conditions, placement and protection methods shall be in accordance with this Section and ACI 305.

6.29. Attachment of Bolts or Dowels to Hardened Concrete

6.29.1. Holes drilled in hardened concrete for epoxy grouting of anchor bolts, reinforcing bars and dowels shall be drilled with a rotary impact drill to a diameter 1/8 inch greater than the item to be installed in the hole. The hole shall be cleaned with water to remove concrete dust and then dried. Do not use compressed air to dry the hole unless it is oil-free air. The hole shall be clean and dry prior to introduction of the epoxy.

6.29.2. Reinforcing bars, dowels and anchors bolts, which are to be epoxy grouted, shall be sandblasted to white metal and shall be clean, dry and at temperatures specified by the epoxy manufacturer.

6.30. Clean-Up

Following completion of the work covered by the contract and this Specification for any structure or portion thereof, the Subcontractor is required to clean-up the area for subsequent construction or equipment installation. The clean-up work shall consist of, but not be limited to, removal of construction equipment and materials used in the work, forms, unused materials, and spilled concrete. The clean-up work and disposal of trash and debris shall be as directed and approved by the Contractor.

7. TESTING AND INSPECTION

7.1. Subgrade Density

The subgrade density of undisturbed soil or the compaction of fill material will be tested by others retained by the Contractor using an approved method as directed by the Contractor.

7.2. Concrete Strength Testing

7.2.1. During the course of construction, tests shall be made by others retained by the Contractor to determine whether the concrete, as being produced and delivered, complies with the standards of quality specified. The sampling and testing of concrete shall be in accordance with Specification for Sampling, Testing and Construction Control of Concrete, Earthwork and Structural Steel, B08.01T.

a. The Subcontractor is not relieved of the responsibility of proper placing and curing even though test reports indicate adequate strengths.

b. The Subcontractor shall provide such access and assistance as these personnel may require in obtaining their samples, and shall not place any concrete rejected by them for any reason.

c. For concrete containing fly ash, the fly ash shall be tested every 30 days minimum or as specified in ASTM C 311.

7.2.2. Enforcement of Strength Requirements

a. Definition of Failure

(1) Cast Specimens
The test specimens cast in the field will be considered to have failed the strength requirements when, for any class of concrete, the average of any set of three consecutive strength test results are not equal to the

specified strength or any individual test result falls below the specified strength by more than 500 psi.

(2) Cored Specimens
The concrete represented by cored specimens will be considered to have failed the strength requirements when the average strength of the cores falls below 85 percent of the specified strength or the strength of any single core specimen falls below 75 percent of the specified strength.

b. Failure of Test Specimens

When test specimens, made, cured, and tested fail as above defined, the Contractor may request one or more of the following actions be taken:

(1) Additional Wet Curing
The Subcontractor shall wet cure the structure in accordance with a plan approved by the Contractor.

(2) Testing of Cored Specimens
The Contractor will specify the location where each core specimen shall be secured. At least three cores shall be taken from each portion of the structure for which cast test specimens have failed.

Specimens will be secured, prepared and tested in accordance with ASTM C 42 and ACI 301. Cored specimens shall be tested no later than 60 days after the concrete was placed unless otherwise authorized by the Contractor.

Where cored specimens fail as defined in Section 7.2.2.a(2), the Subcontractor shall strengthen or replace the structure in accordance with a plan approved by the Contractor.

(3) Reinforcing the Structure
The Subcontractor shall strengthen the deficient portions of the structure in accordance with a plan approved by the Contractor.

(4) Replacement
The Subcontractor shall replace the deficient portions of the structure in accordance with a plan approved by the Contractor.

(5) Test Loading
The Subcontractor shall conduct a test loading of the structure according to Chapter 20, ACI 318 in an area, or areas, designated by the Contractor.

7.3. Slump Tests

7.3.1. Slump tests will be made in accordance with ASTM C 143.

Slump tests will be made from samples taken in accordance with ASTM C 172.

7.3.2. Tests for Entrained Air

The entrained air content of fresh concrete shall be determined in accordance with ASTM C 231.

7.4. Inspection

7.4.1. The Subcontractor shall allow the Contractor a minimum of eight working hours notice prior to anticipated start of placement of concrete for inspection. The work to be performed in the presence of, with the knowledge of, or inspected by the Contractor or person delegated by him to approve the work, consists of, but is not limited to the following: Subgrade conditions; formwork location, dimensions, adequacy and support; reinforcement sizes, location, tieing, support, splicing and cleanliness; embedded items location, dimensions and support; the condition and adequacy of all placement equipment including pumps, chutes, vibrators, and provision of cold or hot weather equipment or materials required; and the provisions for work platforms, barricades and safety provisions.

7.4.2. Materials supplied and work performed under this Specification may, at the Contractor's option, be inspected in the shop and, or batch plant and will be inspected in the field. The Subcontractor shall provide facilities for shop or batch plant inspection, if requested by the Contractor, at no additional cost to the Contractor. Inspection of material does not in any way relieve the Subcontractor of responsibility for the quality and accuracy of the material.

7.4.3. Material or work not meeting the requirements specified herein will be rejected and shall be replaced at the Subcontractor's expense.

7.4.4. The Subcontractor shall be responsible for all errors in detailing and fabrication.

8. HANDLING AND STORAGE

8.1. Reinforcement

8.1.1. Packaging

Bars shall be bundled and tagged in accordance with the Manual of Standard Practice, latest revision thereof, as published by the Concrete Reinforcing Steel Institute.

8.1.2. Storing

Reinforcing steel shall be handled and stored in a manner to avoid distortion, excessive rusting, and objectionable coatings of paint, oil, grease, dried mud, dried mortar or other materials. Bars shall be stored so that each may be identified after bundles are broken.

8.2. Embedded Items

Embedded items shall be handled and stored in a manner to avoid distortion, excessive rusting, and objectionable coatings of paint, oil, grease, dried mud, dried mortar or other materials. Anchor bolt threads shall be protected from rusting or burring.

8.3. Accessories

Accessories shall be stored in a manner to avoid distortion and objectionable coatings. Expansion joint material shall not be crushed or broken. Waterstop material shall not be crushed, distorted or punctured. All materials shall be stored in a manner to prevent it being lost or misplaced.

9. DOCUMENTATION

9.1. Concrete Placement Clearance

The "Concrete Placement Clearance" form will be provided by the Contractor. This form must be completed and submitted to the Contractor prior to concrete placement.

9.2. Material Specifications

9.2.1. The Subcontractor shall provide the Contractor with a copy of the manufacturer's specifications for all materials purchased by the Subcontractor and used in the work, such as but not limited to; form ties, expansion joint material, waterstops, sealants, curing compounds, concrete additives, embedded items, concrete protective coatings, and any manufactured items used in the work.

9.2.2. The Subcontractor shall provide confirmation specifications or mill reports for steel reinforcement, fibrous reinforcement, and fabricated embedded items.

9.2.3. Submittal of documentation shall be in accordance with the Contract to which this Specification is attached.

9.3. Concrete Mix Design

9.3.1. Prior to placing concrete, the Subcontractor shall submit to the Contractor the concrete materials and the concrete mix designs proposed for use with a written request for acceptance. This submittal shall include the results of all testing performed to qualify the materials and to establish the mix designs in accordance with ACI 301, ~~Paragraph 3.8~~ Section 4. The data submitted shall also include certification that all material proposed for use in the concrete meets the specified requirements and all test results, or manufacturer's certification and/or analyses which are the basis of this certification. No concrete shall be placed in the work until the Subcontractor has received such acceptance in writing.

9.3.2. The Subcontractor shall submit printed recommendations from the manufacturer of fibrous concrete reinforcement. The recommendations shall state the length of fiber which shall be used and the quantity of fiber to be added per cubic yard for each class of concrete specified herein.

9.4. Fabricated Item Shop Details

9.4.1. Reinforcing Steel

Prior to fabrication or shipment of reinforcing and accessories, the Subcontractor shall submit, and receive approval of, shop drawings. Shop drawings shall indicate bending diagrams, assembly diagrams, splicing and lapping of rods, shapes, dimensions and details of bar reinforcing and accessories. Drawings shall show all openings and penetrations that pass through concrete construction. The approval of drawings will be for conformance to the design intent and will not relieve the Subcontractor of responsibility for errors, omissions or the accuracy of his own dimensions. Drawings and details shall conform to ACI 315 and ACI 318.

9.4.2. Embedded Items

Prior to fabrication or shipment of embedded items, the Subcontractor shall submit, and receive approval of, shop drawings. The drawings will show all material specifications, cuts, anchorage devices, welds and finish in accordance with the engineering Drawings and the American Institute of Steel Construction Code of Standard Practice. The approval of drawings will be for conformance to the design intent and will not relieve the Subcontractor of responsibility for errors, omissions, or the accuracy of dimensions.

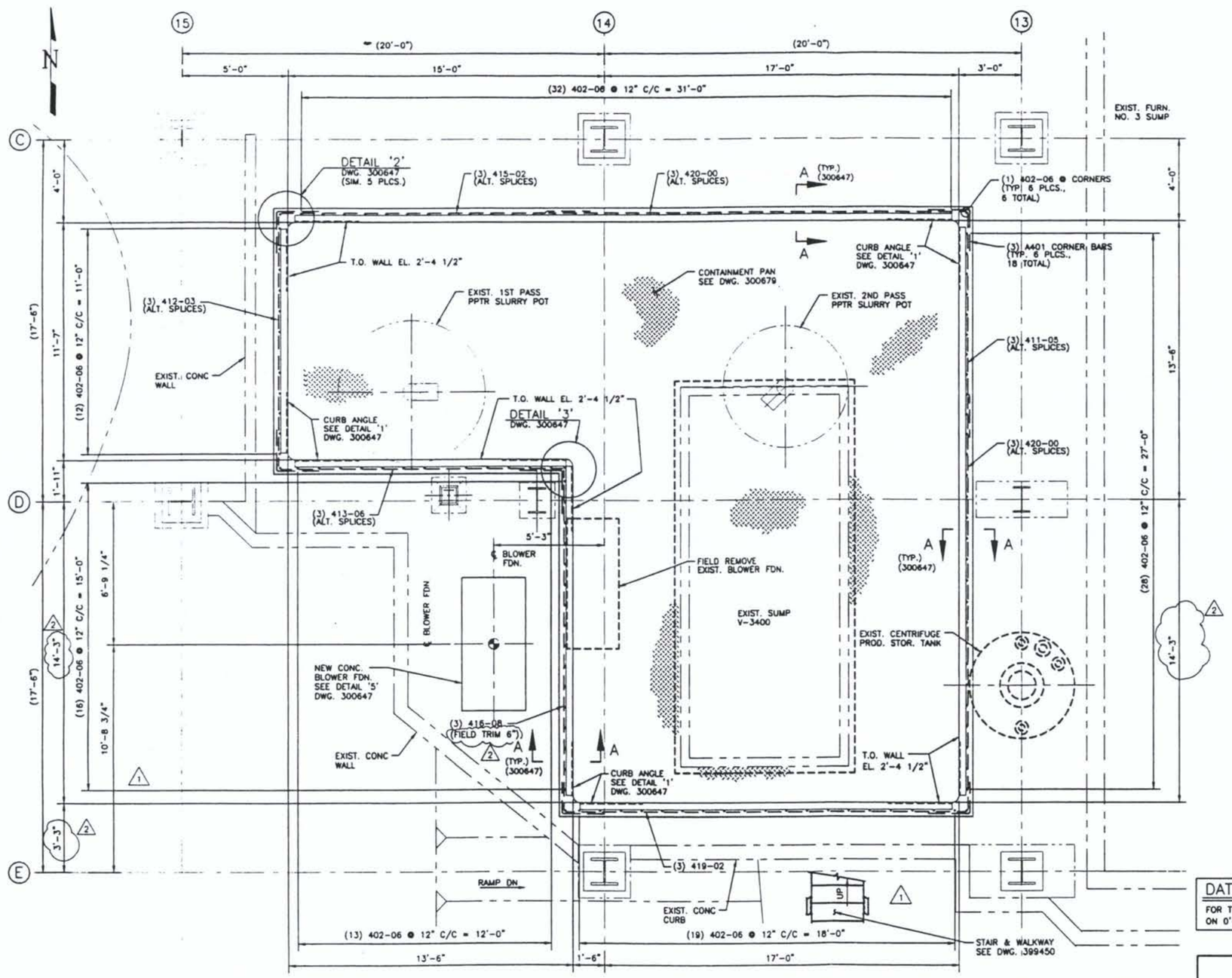

PLAN – GROUND FLOOR

SCALE: 3/8"=1'-0"

REINFORCING CUTTING & BENDING SCHEDULE

	NO. REQ'D	MARK NUMBER (MK)	SIZE	DIMENSIONS (OUT TO OUT) LENGTH	a	b	c	d	e	TOTAL L.F	LBS
CONTAINMENT WALL	120	402-06	#4	2'-6"						300'-0"	200
	3	411-05	#4	11'-5"						34'-3"	23
	3	412-03	#4	12'-3"						36'-9"	25
	3	413-06	#4	13'-6"						40'-6"	27
	3	415-02	#4	15'-2"						45'-6"	30
	3	416-08	#4	16'-8"						50'-0"	33
	3	419-02	#4	19'-2"						57'-6"	38
	6	420-00	#4	20'-0"						120'-0"	80
	18	A401	#4	4'-11"	2'-6"	2'-6"				88'-6"	59
BLOWER FDN.	4	B401	#4	10'-6"	2'-8"	4'-0"	4'-0"			42'-0"	28
	7	B501	#5	4'-9"	2'-7"	1'-2"	1'-2"			33'-3"	35
	3	B502	#5	7'-11"	5'-11"	1'-1"	1'-1"			23'-9"	25

*TOTAL LBS.= 603

* BASED ON FABRICATED LENGTHS

LENGTH — STRAIGHT BAR

TYPE "A"

TYPE "B"

REINFORCING SCHEDULE NOTES:

1. EACH BUNDLE OF REINFORCING SHALL BE TAGGED. THE TAG SHALL INDICATE THE MARK NUMBER, QUANTITY, DESIGN DRAWING NUMBER (WHERE SCHEDULE IS SHOWN)
2. THE ABOVE REINFORCING SCHEDULE INCLUDES ALL REINFORCING FOR THE FOLLOWING DRAWINGS: 300646 & 300647.
3. REINFORCING STEEL BARS: ASTM A615, GRADE 60. WELDED WIRE FABRIC (WWF): ASTM A185.
4. MARK NUMBER DESIGNATIONS:

REQ'D — (2)-MK-508-10 — MARK NO.
BAR SIZE
BAR LENGTH (FEET)
BAR LENGTH (INCH)
"STRAIGHT" BAR

REQ'D — (2)-MK-A501 — MARK NO.
BAR TYPE
BAR SIZE
BAR SEQ. NO.
BAR "TYPE"

NOTES:

1. WORK THIS DRAWING WITH 300647 & 300679.
2. FOR CONCRETE STANDARD DETAILS, GENERAL NOTES AND STANDARD EMBEDMENT DETAILS SEE DRAWINGS 397743 & 397744.
3. ALL CONCRETE TO BE 3000 PSI @ 28 DAYS (CLASS CSA).
4. FOR CONCRETE PROPORTIONING, FORMING, PLACING, CURING, MATERIALS AND ADDITIONAL REQUIREMENTS SEE PROJECT SPECIFICATION NO. B05.00T.
5. MINIMUM LAP SPLICE FOR #4 BAR SHALL BE 2'-6".

DATUM NOTE:

FOR THIS AREA, ELEVATIONS ARE BASED ON 0'-0 = 4481'-0

THIS DOCUMENT HAS BEEN SEALED BY A PROFESSIONAL ENGINEER AND A RECORD COPY IS AVAILABLE FOR EXAMINATION

PROFESSIONAL ENGINEER REGISTERED 8-3-99 STATE OF IDAHO FLOYD J VISSAT

REVISION APPROVAL RECORD — REV 2

DISCIPLINE	REVIEWED	DATE	DISCIPLINE	REVIEWED	DATE
CIVIL	-	-	PIPING	BTH	8-4-99
STRUCTURAL	FJV	8-3-99	ELECTRICAL	-	-
HVAC	-	-	ARCHITECTURAL	-	-
MECHANICAL			INST & CONTROL	-	-
PROCESS	-	-	ENVIRONMENTAL	-	-
NUCLEAR	-	-	GEN. ARRANG.	-	-

Raytheon Engineers & Constructors

DRAWING STATUS

STATUS	REV	DATE	SDE	PEM
FOR APPROVAL	A	3/30/99	FJV	CTL
APPROVED FOR CONSTRUCTION	0	4/19/99	FJV	CTL
REVISED & APPROVED FOR CONSTRUCTION	2	8/3/99	FJV	CTL

NOT APPROVED FOR CONSTRUCTION UNLESS SIGNED & DATED. DESTROY ALL PRINTS BEARING EARLIER DATE &/OR REV. NO.

MK	ZONE	REVISIONS	DATE	BY	APVD.
2		MOVED SOUTH WALL 6" NORTH	8-3-99	FJV	RPB
1		REV. BLOWER FDN. & STAIR LOCATIONS, REM. HOLD FROM SCH.	5-11-99	FJV	RPB
0		APPROVED FOR CONSTRUCTION	4-19-99	FJV	RPB
A		ISSUED FOR APPROVAL	3-30-99	FJV	RPB

FMC — PHOSPHORUS CHEMICAL DIVISION — FMC CORPORATION — POCATELLO, IDAHO — FMC

REFERENCE DRAWINGS	
385073	PLAN-CONC./DRAINAGE
388453	ARR.-CONC. @ EL. 0'-0"
395098	ARR.-SUMP V-3400
300626	LOC. PLAN & DWG. SCH.
300679	CONTAINMENT PLAN

POINT OF GENERATION
FURNACE #3
CONCRETE DRAINAGE
CONTAINMENT
PLAN GROUND FLOOR

CHG. C98-03 — SCALE AS SHOWN
DRAWN NEY 1-5-99 — APPROVED RPB 4-14-99
CHECKED FC 4-19-99 — APPROVED

THIS PRINT AND ALL INFORMATION THEREON IS OUR PROPERTY, IS CONFIDENTIAL AND MUST NOT BE MADE PUBLIC OR COPIED UNLESS AUTHORIZED BY US. IT IS SUBJECT TO RETURN ON DEMAND. PHOSPHORUS CHEMICAL DIVISION

DRAWING IDENTIFIER

PLANT	SITE	DRAWING NO	DISC	REV.
P	F3	300646	S	2

1 PRINT DATE.

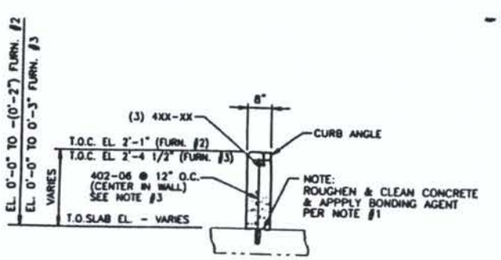

A – A (300645) (300646)
1/2" = 1'-0

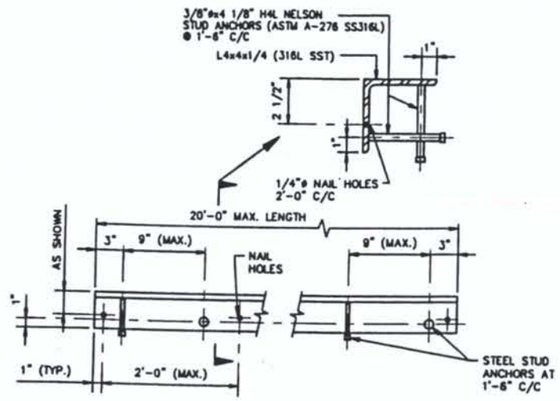

DETAIL '1'
1 1/2" = 1'-0

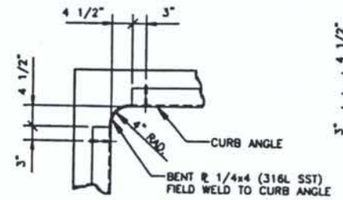

DETAIL '2'
3/4" = 1'-0"

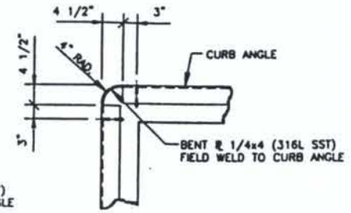

DETAIL '3'
3/4" = 1'-0"

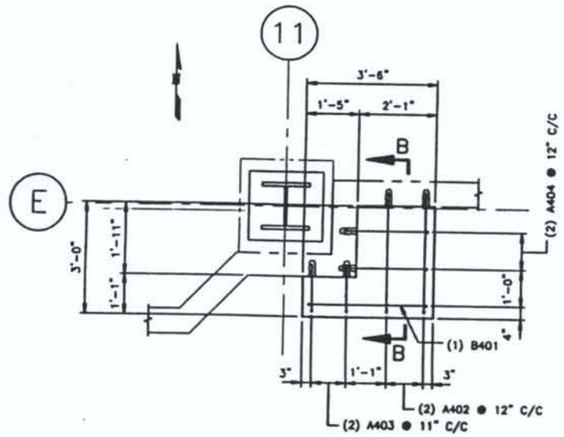

DETAIL '4' (300645)
1/2" = 1'-0

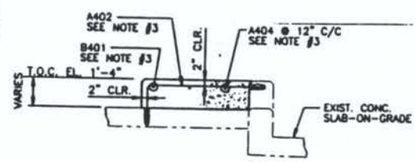

B – B
1/2" = 1'-0

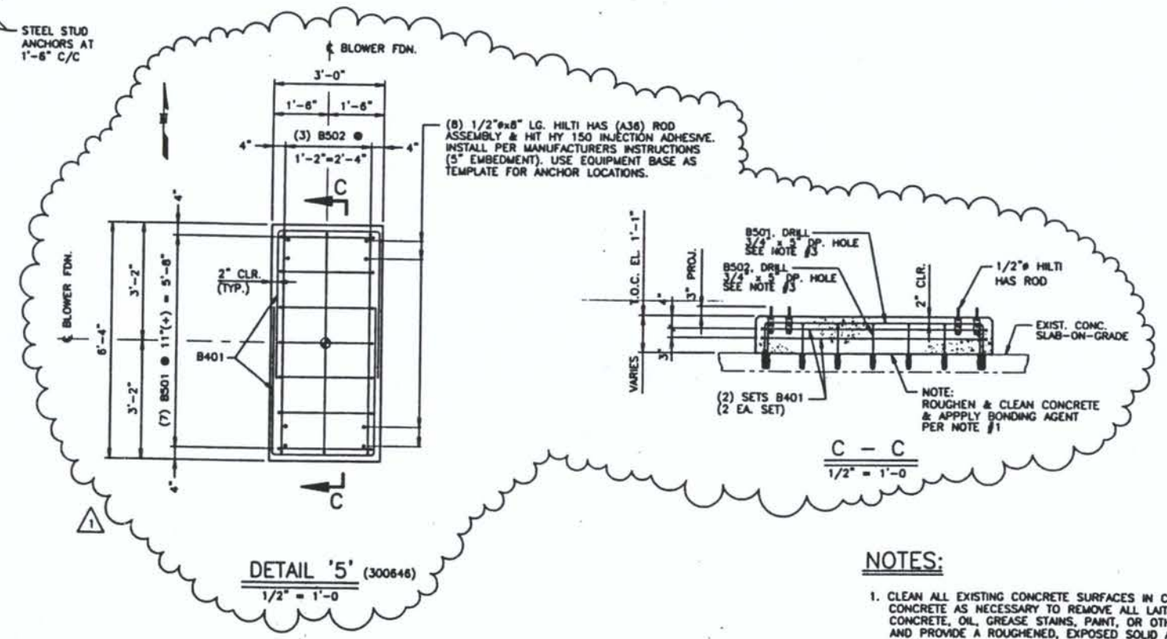

C – C
1/2" = 1'-0

DETAIL '5' (300646)
1/2" = 1'-0

NOTES:

1. CLEAN ALL EXISTING CONCRETE SURFACES IN CONTACT WITH NEW CONCRETE AS NECESSARY TO REMOVE ALL LATANCE, UNSOUND CONCRETE, OIL, GREASE STAINS, PAINT, OR OTHER CONTAMINANTS, AND PROVIDE A ROUGHENED, EXPOSED SOLID AGGREGATE SURFACE WITH AT LEAST 1/8" PROFILE PRIOR TO APPLICATION OF W.R. MEADOWS 'INTRALOK' BONDING AGENT. INSTALL BONDING AGENT PER MANUFACTURER'S INSTRUCTIONS.
2. WORK THIS DRAWING WITH 300645 & 300646.
3. FIELD DRILL & CLEAN 5/8"ø x 4 1/4" DEEP HOLE, U.N. INTO EXISTING CONCRETE AND SET REINFORCING W/HILTI HIT HY 150 INJECTION ADHESIVE. INSTALL PER MANUFACTURER'S INSTRUCTIONS.

MK	ZONE	REVISIONS	DATE	BY	APVD.
1		REM. HOLD FROM DET. 5 & SECT. C-C	5-11-99	FJV	RPB
0		APPROVED FOR CONSTRUCTION	4-19-99	FJV	RPB
A		ISSUED FOR APPROVAL	3-30-99	FJV	RPB

FMC — PHOSPHORUS CHEMICAL DIVISION
FMC CORPORATION
POCATELLO, IDAHO

REFERENCE DRAWINGS

POINT OF GENERATION
FURNACE #2 & #3
CONCRETE DRAINAGE
CONTAINMENT
SECTIONS & DETAILS

DRAWN NEY 1-4-99 APPROVED RPB 4-14-99
CHECKED FC 4-19-99 APPROVED

CHG. C98-03 SCALE AS SHOWN

THIS PRINT AND ALL INFORMATION THEREON IS OUR PROPERTY, IS CONFIDENTIAL AND MUST NOT BE MADE PUBLIC OR COPIED UNLESS AUTHORIZED BY US. IT IS SUBJECT TO RETURN ON DEMAND.
PHOSPHORUS CHEMICAL DIVISION

DRAWING IDENTIFIER

PLANT	SITE	DRAWING NO.	DISC.	REV.
P	F2/F3	300647	S	1

1 PRINT DATE

THIS DOCUMENT HAS BEEN SEALED BY A PROFESSIONAL ENGINEER AND A RECORD COPY IS AVAILABLE FOR EXAMINATION

PROFESSIONAL ENGINEER CONSTRUCTION 5-11-99 STATE OF IDAHO FLOYD J. VISSER

REVISION APPROVAL RECORD — REV 1

DISCIPLINE	REVIEWED	DATE	DISCIPLINE	REVIEWED	DATE
CIVIL	-	-	PIPING	BJH	5-11-99
STRUCTURAL	FJV	5-11-99	ELECTRICAL	-	-
HVAC	-	-	ARCHITECTURAL	-	-
MECHANICAL	[illegible]	5-11-99	INST & CONTROL	-	-
PROCESS	-	-	ENVIRONMENTAL	-	-
NUCLEAR	-	-	CIVIL ARRANGE.	-	-

Bechtel — Engineers & Constructors

DRAWING STATUS

STATUS	REV	DATE	SDE	PEM
FOR APPROVAL	A	3/30/99	FJV	CTL
APPROVED FOR CONSTRUCTION	0	4/19/99	FJV	CTL
REVISED & APPROVED FOR CONSTRUCTION	1	5/11/99	FJV	CTL

NOT APPROVED FOR CONSTRUCTION UNLESS SIGNED & DATED. DESTROY ALL PRINTS BEARING EARLIER DATE &/OR REV. NO.

INDEX
STRUCTURAL CALCULATIONS
FMC-POCATELLO,IDAHO (96096088)

POINT OF GENERATION PROJECT

FILE NO	BOOK NO.	DESCRIPTION	TAG NO.	FINAL DESIGN	CHK'D CALCS
13-088-01	1	P.O.G. FURN. #1: W.W. CONTAIN. GUTTER		NY	FJV
13-088-02	1	P.O.G. FURN. #1: CONC. DRAINAGE		NY	FJV
13-088-03	1	P.O.G. FURN. #1: SOUTH STAIR MODS.		NY	FC
13-088-04	1	P.O.G. FURN. N-E DOOR SUMP LID & CONTAIN.	T-1415	FJV	FC
13-088-05	1	P.O.G. PHOS-DOCK N. BUILD. STRUCT.		FC	NY
13-088-06	2 & 3	P.O.G. PHOS-DOCK N. BUILD. FDN.		FJV/FC	FC/FJV
13-088-07	1	P.O.G. PHOS-DOCK N. CONTAIN. LINER		RC	NY
13-088-08	1	P.O.G. PHOS-DOCK N. MISC. SUPT.		NY	FC
13-088-09	1	P.O.G. PHOS-DOCK N. ELECT. ROOM FDN.		FC	NY
13-088-10	1	P.O.G. FUREN. #2: MISC. PIPE SUPPORTS		NY	FC
13-088-11	1	P.O.G. FURN. #2 & 3#: W. W. CONTAIN GUTTER		NY	FC
13-088-12	1	P.O.G. PHOS-DOCK N. FLOC BLDG. ACCESS		NY/FC	FC/FJV
13-088-13	1	P.O.G. PHOS-DOCK N. CENT. PRODUCT PIT SUMP		FC	FJV
13-088-14	1	P.O.G. FURN. #3 PLATF. @ EL. 5'-0 MODS		NY	FJV
13-088-15	1	P.O.G. FURN. #1 WASTE WATER SUMP FDN.	V-1400	PR	FC
13-088-16	1	P.O.G. FURN. #2 WASTE WATER SUMP FDN.	V-2400	PR	FC
13-088-17	1	P.O.G. FURN. #3 WASTE WATER SUMP FDN.	V-3400	PR	FC
13-088-18	1	P.O.G. FURN. #4 WASTE WATER SUMP FDN.	V-4400	PR	FC

PROFESSIONAL ENGINEER
REGISTERED
7675
8-24-99
STATE OF IDAHO
FLOYD J. VISSAT

Raytheon Engineers & Constructors	CALCULATION SUMMARY & CONTROL SHEET	CALCULATION SET NO. 13-088-17

PRELIM.	FINAL	VOID	REVISION
	✓		

Sheet 1 of 2

CLIENT FMC CORP., POCATELLO, IDAHO

PROJECT TITLE P.O.G. FURNACE #3

DISCIPLINE STRUCTURAL

PROJECT NO 96096.088

SUBJECT SUMP V-3400

COMPLETED BY P Ray DATE 8-11-99

CHECKED BY E. CHOTECHUANG DATE 8-12-99

APPROVED BY [signature] DATE 8.26.99

REVISION SUMMARY:

N/A

TOTAL NUMBER OF SHEETS IN THIS ISSUE 2

SHEETS REVISED, ADDED, OR DELETED

PROBLEM STATEMENT:

ASSESSMENT OF EXISTING SUMP V-3400 FOR STRUCTURAL ADEQUACY AND WATER-TIGHTNESS.

RESULTS & CONCLUSIONS:

THE SUMP 'V-3400' IS SIMILAR TO V-2400. NO ADDITIONAL CACULATION REQUIRED. SUMP V-3400 IS QUALIFIED BY COMPARING WITH SUMP V-2400 (CALC. NO. 13-088-16).

AS SUCH THE SUMP V-3400 IS ADEQUATE AND QUALIFIED FOR THE PRESENT LOADING CONDITION. REINFORCING IS ADEQUATE FOR WATER-TIGHTNESS.

Raytheon Engineers & Constructors	CALCULATION SUMMARY & CONTROL SHEET	CALCULATION SET NO. 13-088-17

PRELIM.	FINAL	VOID	REVISION
	✓		

Sheet 2 of 2

CLIENT FMC CORP., POCATELLO, IDAHO

PROJECT TITLE P.O.G. FURNACE #3 SUMP V-3400

DISCIPLINE STRUCTURAL

PROJECT NO 96096.088

DESIGN BASIS & ASSUMPTIONS:

1.0 ACI 318-95.
2.0 FMC-STRUCTURAL DESIGN CRITERIA.
3.0 GEOTECHNICAL REPORT.
4.0 "CONCRETE WATERTIGHT STRUCTURE" (ASCE-PUBLICATION) BY "ROBERT HENGST"

UNVERIFIED ASSUMPTIONS/OPEN ITEMS:

NONE

REFERENCES:

DWG. NOS:
395059-60, 395073-75, 395098-99, 395107
300679-82.
CALCULATION SET NO. 13-088-16

ATTACHMENTS (INCLUDING NUMBER OF PAGES):

COMPUTER PROGRAM DISCLOSURE INFORMATION:

PROGRAM USED (NAME):	REV NO. / ISSUE DATE	RE&C VERIFIED	REMARKS/NUMBER OF PAGES
		☐ YES ☐ NO	

CHECKED BY _____ DATE _____

RUN BY _____ DATE _____

Raytheon Engineers & Constructors	CALCULATION SUMMARY & CONTROL SHEET	CALCULATION SET NO. 13-088-16

PRELIM.	FINAL	VOID	REVISION
	✓		

Sheet 1 of __

CLIENT: FMC CORP., POCATELLO, IDAHO

PROJECT TITLE: P.O.G. FURNACE #2

DISCIPLINE: STRUCTURAL

PROJECT NO: 96096.088

SUBJECT: SUMP V-2400

COMPLETED BY	F Ray	DATE	8-10-99
CHECKED BY	F. CHOTECHUANG	DATE	8.11.99
APPROVED BY	[illegible]	DATE	8-24-99

REVISION SUMMARY:

N/A

TOTAL NUMBER OF SHEETS IN THIS ISSUE 11

SHEETS REVISED, ADDED, OR DELETED

PROBLEM STATEMENT:

ASSESSMENT OF EXISTING SUMP 'V-2400' FOR STRUCTURAL ADEQUACY & WATER-TIGHTNESS.

RESULTS & CONCLUSIONS:

THE SUMP V-2400 IS ADEQUATE AND QUALIFIED FOR THE PRESENT LOADING CONDITION.
REINFORCING IS ADEQUATE FOR WATERTIGHTNESS.

Raytheon Engineers & Constructors	CALCULATION SUMMARY & CONTROL SHEET	CALCULATION SET NO. 13-088-16

PRELIM.	FINAL	VOID	REVISION
	✓		

Sheet 2 of ___

CLIENT FMC CORP., POCATELLO, IDAHO

PROJECT TITLE P.O.G. FURNACE #2 SUMP V-2400

DISCIPLINE STRUCTURAL

PROJECT NO 96096.088

DESIGN BASIS & ASSUMPTIONS:

1. ACI 318-95.
2. FMC - STRUCTURAL DESIGN CRITERIA.
3. GEOTECHNICAL REPORT.
4. "CONCRETE WATERTIGHT STRUCTURE" (ASCE-FUE.) BY "ROBERT HENGST".

UNVERIFIED ASSUMPTIONS/OPEN ITEMS:

NONE.

REFERENCES:

ENG. NOS:

395059-60, 395070-72, 395096-97, 395106, 395111
300674-77.

ATTACHMENTS (INCLUDING NUMBER OF PAGES):

COMPUTER PROGRAM DISCLOSURE INFORMATION:

PROGRAM USED (NAME):	REV NO. / ISSUE DATE	RE&C VERIFIED	REMARKS/NUMBER OF PAGES
		☐ YES ☐ NO	

CHECKED BY _____ DATE _____

RUN BY _____ DATE _____

Form 5007 (Rev. 9/95)

Raytheon Engineers & Constructors	GENERAL COMPUTATION SHEET	CALCULATION SET NO. 13-082-16	REV.	COMP. BY FR	CHK'D. BY FC
		PRELIM. / FINAL ✓ / VOID		DATE 8-5-99	DATE 8-11-99
PROJECT FMC CORP., POCATELLO, IDAHO		SHEET 3 OF		DATE	DATE
SUBJECT B.O.G FCE#2/SUMP V-2400		J.O. 96096.088			

METHODOLOGY :

- SUMP WALLS, FOUNDATION AND REINFORCING SHALL BE QUALIFIED IN A SIMPLIFIED BUT CONSERVATIVE MANNER. ALL WALLS SHALL BE TREATED AS CANTILEVER WALLS (CONSV.) UNLESS THE REBARS SHALL BE INADEQUATE. IN CASE OF FAILURE OR INADEQUACY A THOROUGH ANALYSIS SHALL BE PERFORMED LIFTING CONSERVATISM.

GENERAL DATA USED IN THIS CALC:

CONCRETE : $f'_c = 3{,}000$ psi ; $\gamma_{conc.} = 150$ LB/FT^3 ; $\gamma_{H_2O} = 62.4$ LB/FT^3

REBAR : $f_y = 60{,}000$ psi

SOIL: $\gamma_{soil} = 110$ LB/FT^3
$K_a = 0.33$
$K_p = 3.00$
$K_o = 0.50$

SURCHARGE: USE 2FT OF SOIL (220 LB/□') OR ACTUAL WHICHEVER IS HIGHER.

WATER TABLE: BELOW 41'-6.

LIVE LOAD : a) GENERAL FLOORS/PLATF. = 150 LB/□'
b) GRADE SLAB (PAVED) = 250 LB/□'
(FMC. STD. ES-8-1-1)

Raytheon Engineers & Constructors

GENERAL COMPUTATION SHEET

PROJECT FMC CORP., POCATELLO, IDAHO

SUBJECT P.O.G. FCE #2/SUMP V-2400

CALCULATION SET NO. 13-088-16

PRELIM. | FINAL ✓ | VOID

SHEET 4 OF

J.O. 96096.088

REV

COMP BY PR DATE 8-5-99

CHK'D BY FC DATE 8-11-99

DATE

DATE

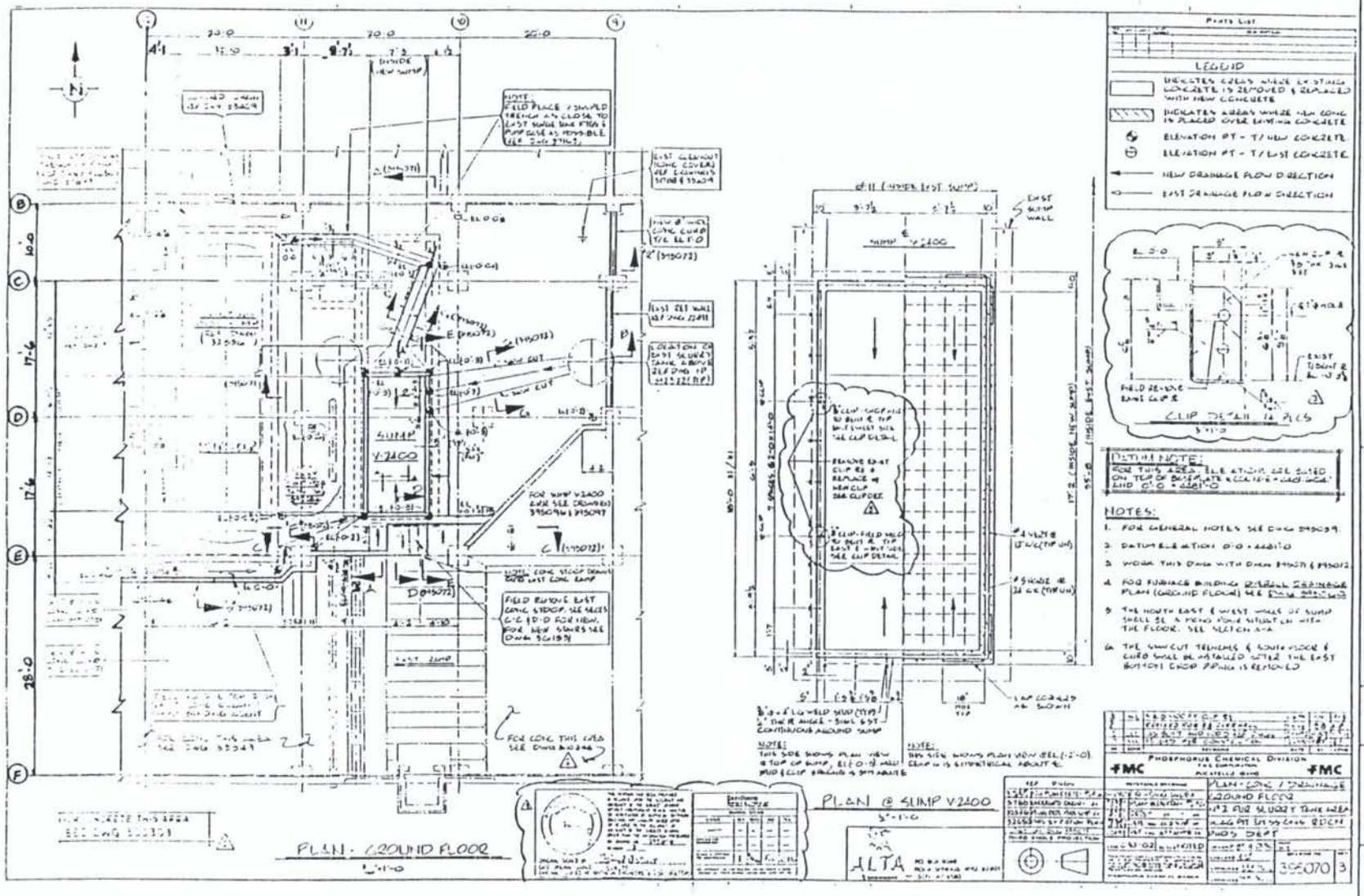

Form 5007 (Rev. 9/95)

Raytheon Engineers & Constructors

GENERAL COMPUTATION SHEET

PROJECT FMC CORP., POCATELLO, IDAHO

SUBJECT P.O.G. FCE #2/SUMP V-2400

CALCULATION SET NO. 13-088-16

PRELIM. | FINAL ✓ | VOID

SHEET 5 OF

J.O. 96096.088

REV.

COMP. BY PR DATE 8-5-99

CHK'D. BY FC DATE 8-11-99

DATE

DATE

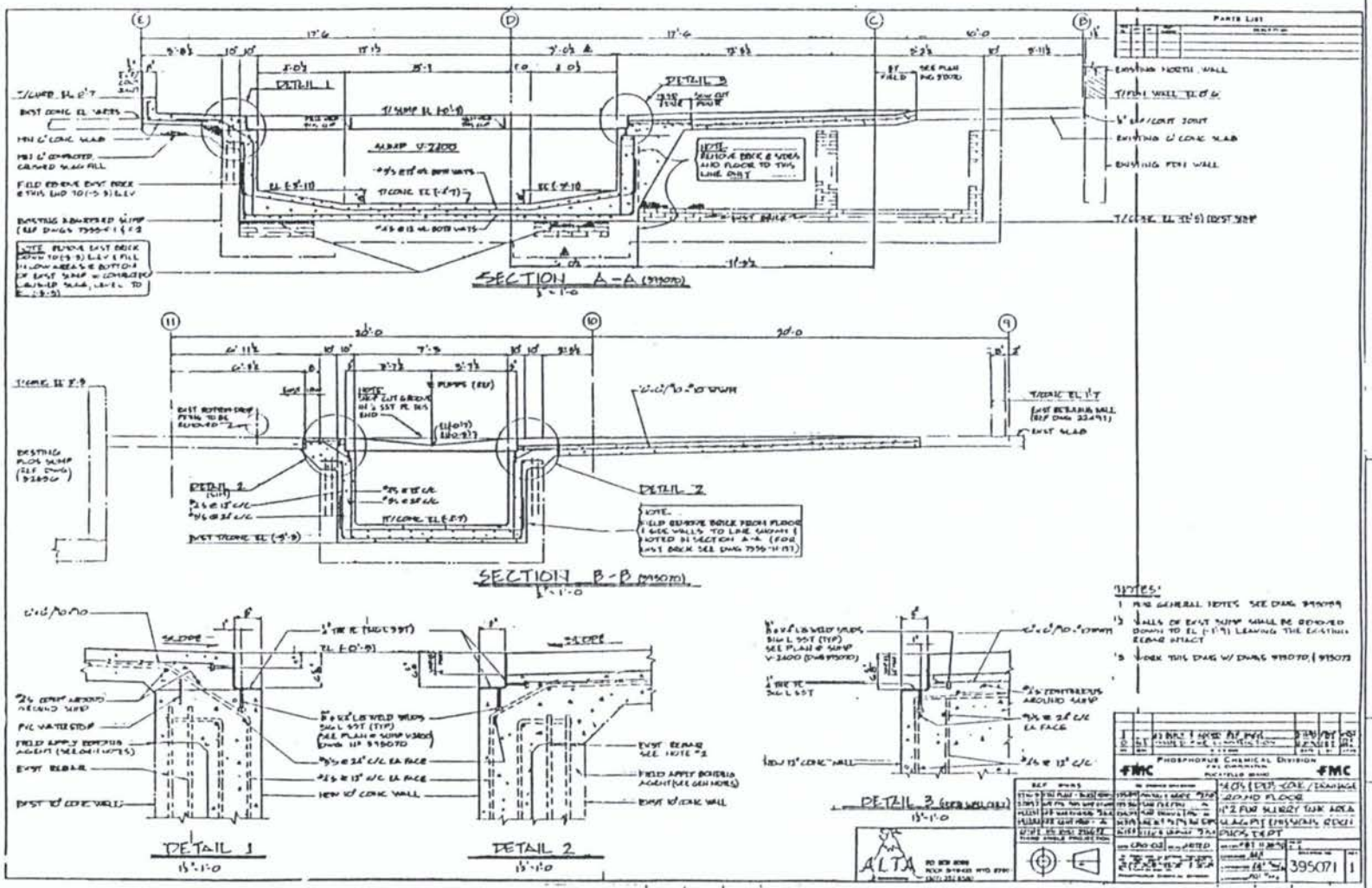

Form 5007 (Rev. 9/95)

Raytheon Engineers & Constructors — GENERAL COMPUTATION SHEET	CALCULATION SET NO. 13-098-16	REV.	COMP. BY PC	CHK'D. BY FC
	PRELIM. / FINAL ✓ / VOID		DATE 8/9/99	DATE 8-11-99
PROJECT FMC CORP., POCATELLO, IDAHO	SHEET 6 OF		DATE	DATE
SUBJECT P.O.G. FCE #2 / SUMP V-2400	J.O. 96096.088			

SUMP V-2400 :

NEGLECT EXIST. ABANDONED SUMP (CONS.)
CHECK SUMP WALL (V-2400) CONSIDERING SUPPORTING ALL EARTH/WATER PRESSURE. USE MIN THICKNESS @ SUMP BASE. SEE SEC. B-B (SHT. 5) & SIMPLIFIED WALL AS FOLLOWS;

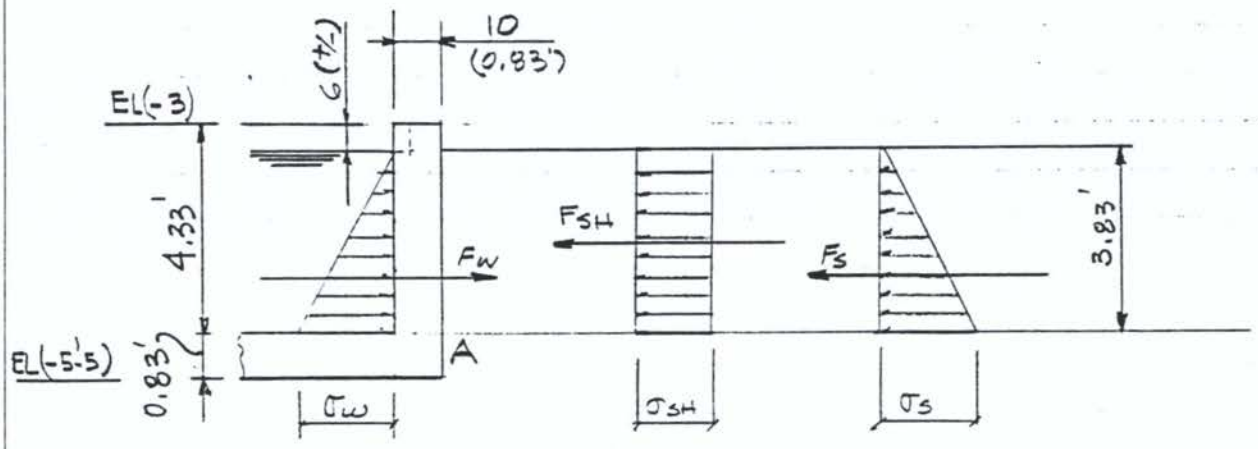

TAKE LGT. OF WALL SECTION. B = 1 FT FOR DESIGN PURPOSE:

$\sigma_W = 3.83' \times 0.0624\ ^{K}/_{FT^3} \times 1.0' = 0.24\ ^{K}/_{FT}$

$F_W = \frac{1}{2} \times 3.83' \times 0.24 = 0.46^k$ (NOT CRITICAL HERE)

ACTUAL SURCHARGE $= 0.075\ ^{K}/_{\square'} + 0.250\ ^{K}/_{\square'} = 0.325\ ^{K}/_{\square'}$
(6" CONC. SLAB)

$\sigma_{SH} = \overset{K_o}{0.5} \times 0.325\ ^{K}/_{\square'} \times 1.0' = 0.16\ ^{K}/_{FT}$

$F_{SH} = 0.16 \times 3.83' = 0.61^k$

$\sigma_S = 0.5 \times 3.83' \times 0.110\ ^{K}/_{FT^3} \times 1.0' = 0.21\ ^{K}/_{FT}$

$F_S = \frac{1}{2} \times 0.21\ ^{K}/_{FT} \times 3.83' = 0.40^k$

Form 5007 (Rev. 9/95)

Raytheon Engineers & Constructors — GENERAL COMPUTATION SHEET	CALCULATION SET NO. 13-088-16	REV.	COMP. BY PR	CHK'D. BY FC
	PRELIM. / FINAL ✓ / VOID		DATE 8/9/99	DATE 8.11.99
PROJECT FMC CORP., POCATELLO, IDAHO	SHEET 7 OF		DATE	DATE
SUBJECT P.O.G. FCE #2/SUMP V-2400	J.O. 96096,088			

FOR MOST CRITICAL MOMENT @ A, CONSIDER EMPTY TANK:

$$M_A = 0.61 \times (3.83) \times \tfrac{1}{2} + 0.40 \times (3.83)\tfrac{1}{3}$$
$$= 1.17'^k + 0.51'^k$$
$$= 1.68'^k$$

CHECK 10" WALL SECTION:

ULT. FACTOR FOR WATERTIGHTNESS

$$M_{UA} = (1.7) \times 1.68 \times (1.3) = 3.71'^k$$

$b = 12"$ #4 BARS (VERT.)

$d = 10" - 1.5" - 0.25" = 8.25"$

$$F = bd^2/12000$$
$$= \frac{12 \times (8.25)^2}{12000}$$
$$= 0.06806$$

$k = M_{UA}/F = 3.71/0.06806 = 55 \quad \approx> a_m = 4.45$

$$A_s(\text{REQ'D}) = \frac{M_{UA}}{a_m d}$$
$$= \left(\frac{3.71}{4.45 \times 8.25}\right) \times \frac{4}{3}$$
$$= (0.101) \times 4/3 = 0.135\square"$$

A_s (PROVIDED) => #4 @ 12 => $0.2\square" > A_s$ (REQ'D) -OK-

Form 5007 (Rev. 9/95)

Raytheon Engineers & Constructors	GENERAL COMPUTATION SHEET	CALCULATION SET NO. 13-099-16	REV.	COMP. BY PR	CHK'D. BY FC
		PRELIM. / FINAL ✓ / VOID		DATE 8/9/99	DATE
PROJECT FMC CORP., POCATELLO, IDAHO		SHEET 9 OF		DATE	DATE
SUBJECT P.O.G. FCE#2 / SUMP V-2400		J.O. 96096.098			

WALL MIN. REBAR REQUIREMENTS: (ACI 318-95)

(i) VERTICAL REINF: $A_{sv} = 0.0012 \times 12'' \times 10'' = 0.14\ \square''$

A_s (USED) $= 0.2 \times (2) = 0.40\ \square''$ -OK-

$\rho = 0.4/12 \times 10 = 0.0033$ OK (FOR WATERTIGHTNESS)

(ii) HORZ. REINFORCING: $A_{sh} = 0.002 \times 12'' \times 10'' = 0.24\ \square''$

A_s (USED) $= 0.31\ \square''$ -OK-

#5 @ 24" EA FA (STAGGARED)

$\rho = 0.31/10 \times 12 = 0.0026$ SAY, OK (≈ 0.0028) FOR WATERTIGHTNESS

SHEAR

V_u (MAX) $= (F_{SH} + F_S) \times 1.7 \times 1.3$ ← ULT. ← FAC. FOR WATERTIGHTNESS

$= (0.61 + 0.40) \times 1.7 \times 1.3$

$= 2.23^k$

$\phi V_c = 2 \times 0.85 \times \sqrt{3000} \times 12'' \times 9.25'' \times 10^{-3}$

$= 9.22^k > V_u$ (MAX) -OK-

NOTE:

THIS SHALLOW UNDERGROUND PIT IS PROTECTED BY ABONDONED SUMP PIT (EXIST.) AND SOIL AROUND THE PIT, PUMPS ARE SUPPORTED NEAR GROUND LEVEL (ESTIMATED WT. = 2K/PUMP). AS SUCH SEISMIC CONDITION IS NOT CRITICAL HERE.

SINCE THE WATER TABLE IS BELOW THE BOTTOM OF THE PIT, POSSIBLE BUOYANCY FORCE IS NOT APPLICABLE HERE.

Form 5007 (Rev. 9/95)

Raytheon Engineers & Constructors	GENERAL COMPUTATION SHEET	CALCULATION SET NO. [illegible]	REV.	COMP. BY PS	CHK'D. BY FC
		PRELIM. / FINAL ✓ / VOID		DATE [illegible]	DATE 8-11-99
PROJECT FMC CORP., POCATELLO, IDAHO		SHEET 9 OF		DATE	DATE
SUBJECT P.O.G. FCF #2 / SUMP V-2400		J.O. 96096.083			

CHECK BEARING PRESSURE:

TO INVESTIGATE, CONSIDER THE DEEPERMOST SECTION OF THE PIT (SUPPORTING ONE-PUMP). ASSUME 1 FT LGT. OF THE WALL TAKEN FROM "SECTION B-B" (SEE SHT. 5/THIS CALC.) AND SIMPLIFIED AS SHOWN IN THE FOLLOWING SKETCH;

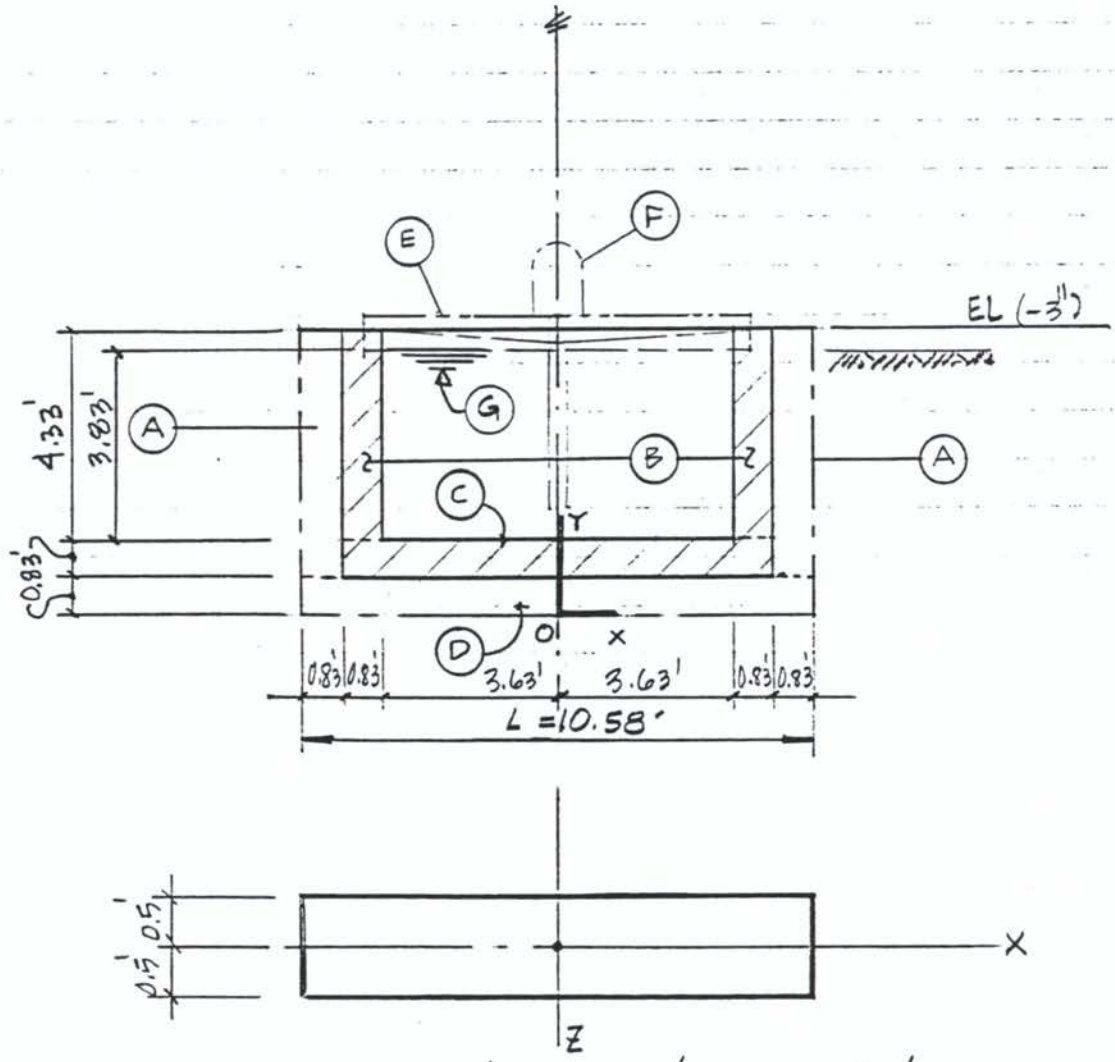

$A_F = 1.0' \times 10.58' = 10.58\,\square'$

$S = S_Z = 1.0' \times (10.58)^2 \times \frac{1}{6} = 18.66\,FT^3$

Form 5007 (Rev. 9/95)

Raytheon Engineers & Constructors	GENERAL COMPUTATION SHEET	CALCULATION SET NO. 15-098-16	REV.	COMP. BY PR	CHK'D. BY FC
		PRELIM. / FINAL ✓ / VOID		DATE 8/10/99	DATE 8-11-99
PROJECT FMC CORP., POCATELLO, IDAHO		SHEET 10 OF		DATE	DATE
SUBJECT P.O.G FLE #2 / SUMP V-2400		J.O. 96096-098			

LOAD GENERATION

ITEMS	CALCULATION / DESCRIPTION	LOAD 'P' (-F_Y) KIP	M_o (FT-K) (M_z)
(A)	P=(2) x 5.16' x 0.83' x 1.0' x 0.150 = 1.28K M_o = 0 EXIST. (ABANDONED) PIT WALLS IN PLACE	1.28	–
(B)	P = (2) x 4.33' x 0.83' x 1.0' x 0.150 = 1.08K M_o = 0 SUMP WALLS	1.08	–
(C)	P = 8.92' x 0.83' x 1.0' x 0.150 = 1.11K M_o = 0 SUMP FOOTING	1.11	–
(D)	P = 10.58□' x 0.53' x 0.150 = 1.32K M_o = 0 EXIST. (ABANDONED) PIT FOOTING IN PLACE	1.32	–
(E)	P = 8.0' x 1.0' x 0.025 K/□' = 0.20K M_o = 0 REMOVABLE COVER (SAY 8'-0 WIDE)	0.20	–
(F)	P = (1.20) x 2.0K = 2.4K M_o = 2.0 x 0.5 = 1.0'K PUMP (ADD 20% FOR FITTINGS) W/6" ELC. USED.	2.40	1.0
(G)	P = 3.83' x 7.26' x 1.0' x 0.0624 = 1.74K M_o = 0 H_2O (CONSIDERED FULL)	1.74	–
	TOTAL ⇒	9.13K	1.0'K

Form 5007 (Rev. 9/95)

Raytheon Engineers & Constructors	GENERAL COMPUTATION SHEET	CALCULATION SET NO. 13-088-16	REV.	COMP. BY PR	CHK'D. BY EC
		PRELIM. / FINAL / VOID		DATE 8/10/99	DATE 8-11-99
PROJECT FMC CORP., POCATELLO, IDAHO		SHEET 11 OF		DATE	DATE
SUBJECT P.O.G. FCE#2/SUMP V-2400		J.O. 96096.083			

$P = 9.13^k$

$M_O = 1.00'^k$

$e = M_O/P = 1.00/9.13 = 0.11' \leq L/6$ (OR 1.76 FT)

$q_{MAX.} = P/A_F + M_O/S$

$= \frac{9.13}{10.58} + \frac{1.0}{18.66}$

$= 0.92$ KSF.

$q_{net} = 0.92 - 5.49' \times 0.110$

$= 0.32$ KSF $\leq$ 2 KSF -OK-

VERY LOW

TEMP/SHRINKAGE STEEL GOVERNS.

$A_{SH} = 0.0018 \times 10'' \times 12'' = 0.22\ \square''$

As (TOP/USED) => #5@12 EA WAY (As = 0.31 □"/EA. WAY) OK

As (BOT/USED) => #4@12 EA WAY (As = 0.20 □"/EA. WAY) OK

$P = \frac{(0.31 + 0.20)}{10 \times 12} = 0.0043 > 0.0033$ 'OK' - FOR WATERTIGHTNESS

SUMP WALLS/FDN. ≈ ADEQUATE

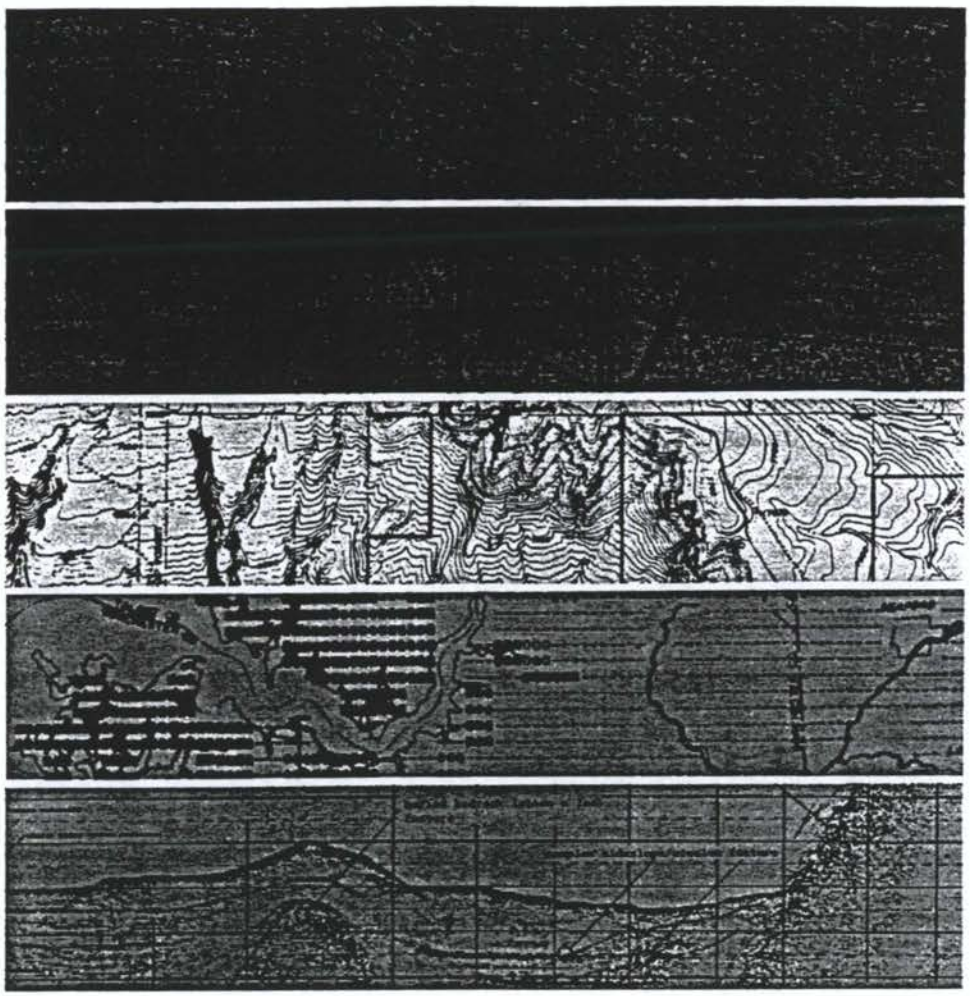

REPORT
GEOTECHNICAL INVESTIGATION
N2 AND HOLLOW ELECTRODE PLANTS
FMC PLANT
POCATELLO, IDAHO

JOB NO. 01003-166-162
November 3, 1994

DAMES & MOORE

DAMES & MOORE

127 SOUTH 500 EAST, SUITE 300, SALT LAKE CITY, UTAH 84102-1959
(801) 521-9255 FAX: (801) 521-0380

November 3, 1994

FMC Corporation
Box 1411
Pocatello, ID 83202

Attention: Mr. Buck Nowell

Report
Geotechnical Investigation
N2 and Hollow Electrode Plants
FMC Plant
Pocatello, Idaho
Job No. 01003-166-162

INTRODUCTION

This report presents the results of our geotechnical investigation for the proposed N2 and Hollow Electrode Plants to be constructed at FMC's Pocatello, Idaho Plant. The site location with respect to major topographic features and existing facilities is presented on Plate 1, Vicinity Map. A detailed layout of the site showing the approximate location of exploratory borings drilled in conjunction with this investigation is shown on Plate 2, Plot Plan.

PURPOSE AND SCOPE OF STUDY

The scope of this investigation was outlined in our proposal, dated September 13, 1994. In general, the purpose of the investigation was to evaluate soil conditions at the site, assess the suitability for construction, and provide appropriate foundation and earthwork recommendations to be utilized in the design and construction of proposed facilities. In accomplishing this purpose the following services were performed.

1) Drilling and sampling of three borings, two at the N2 Plant site and one at the proposed silo site extending to a maximum depth of 43.0 feet below the existing surface grade.

2) Performing laboratory tests to aid in the determination of appropriate design parameters.

3) Initiating an office program that included the evaluation of available data, performing engineering analyses, and preparation of this final report that includes the items listed on the following page.

a. A Vicinity Map and Plot Plan showing the investigation site and the location of exploratory borings.

b. Logs of exploratory borings.

c. A summary of laboratory test data.

d. A description of surface and subsurface conditions encountered.

e. Foundation recommendations including foundation types, allowable bearing capacities, installation criteria with frost depth, and total and differential settlement estimates.

f. Earthwork and site preparation recommendations including excavation requirements, fill placement criteria, compaction criteria, and suitability of onsite/excavated material for backfill.

g. Earth pressure and lateral resistance, i.e. passive pressure coefficients for foundation elements and frictional coefficients for concrete footings bearing on soil. The anticipated modulus of subgrade reaction for mat foundation design (pci).

h. Discussions of site specific soil conditions which may impact proposed construction including seismic setting (with site coefficient) and corrosion and resistivity recommendations.

i. Pile foundation recommendations including pile length and size, allowable axial capacities, lateral load capacities for 1/4 inch deflection, estimated modulus of subgrade reaction (pci), allowable lateral loads (psf), pile installation criteria, and recommend pile spacing to minimize reduction for group capacity.

PROPOSED CONSTRUCTION

Proposed construction for the N2 Plant will include a 12.5 ft diameter x 78 ft long (515 kips) horizontal storage tanks, various skid mounted equipment, and a 13 ft x 13 ft x 129 ft high (275 kip) Cold Box. Settlement must be limited to 1/2 inch at a depth of 2.5 feet below finished grade. Strip, isolated spread, and mat foundations are anticipated for equipment support.

The Hollow Electrode Plant will contain a 200 ton silo structure supported on a four leg braced structure with stair tower and a 60 ft long pipe access bridge attached to the west side of the existing furnace building. Support is expected to consist of driven piles connected with tie beams and pile cap.

FIELD AND LABORATORY INVESTIGATIONS

Subsurface soil conditions at proposed facilities were explored by drilling three borings to depths ranging from 21.0 to 43.0 feet below the present surface grade. Borings were drilled with truck-mounted hollow stem auger drilling equipment. Investigation locations are presented on Plate 2, Plot Plan.

The field program was conducted and supervised by an engineer from our staff who maintained a continuous log of the subsurface conditions encountered. Relatively undisturbed soil samples were obtained using a Dames & Moore Type-U sampler (Plate 3). The soil was classified in the field according to the Unified Soil Classification System (Plate 4) and later was re-examined in the laboratory to confirm field classifications. Graphical representations of subsurface conditions encountered are presented on Plate 5, Log of Borings.

LABORATORY TESTING

GENERAL

A laboratory testing program was conducted on selected samples to provide data for our engineering analyses. The program included moisture and density tests, Atterberg limits tests, unconfined compressive strength tests, mechanical gradation analyses, a direct shear test, consolidation tests, collapse consolidation tests, and chemical tests. The following paragraphs summarize the test results.

MOISTURE AND DENSITY TESTS

Moisture and density tests were performed on relatively undisturbed soil samples to aid in determining the strength and volume change characteristics of site soils. The results of these tests are presented to the left of the graphical boring logs on Plate 5.

ATTERBERG LIMITS TESTS

Atterberg limit tests were performed on selected samples to aid in soil classification and to provide index parameters for correlation. Test results are presented below.

Boring Number	Sample Depth (ft)	Liquid Limit	Plasticity Index	USCS Classification
B-1	10.0-10.5	NP	NP	ML
B-2	15.0-15.5	NP	NP	ML

UNCONFINED COMPRESSIVE STRENGTH TESTS

Unconfined compressive strength tests were performed on selected soil samples to evaluate the undrained shear strength of site soils. Test results are presented in the following table.

Boring Number	Sample Depth (ft)	Unconfined Compressive Strength (psf)	USCS Classification
B-3	15.0-15.5	832	ML
B-3	35.0-35.5	630	ML

MECHANICAL GRADATION ANALYSES

Mechanical gradation analyses were performed on a selected soil from boring B-3 obtained from a depth of 40.0 feet to assist in soil classification. Test results indicate that the sample contained 8 percent sand, 92 percent silty fines, and was classified as silt (ML).

CONSOLIDATION TESTS

One consolidation test was performed on a relatively undisturbed sample obtained from boring B-1 to provide data necessary for consolidation settlement analyses. The results of the consolidation test are presented in the following table.

Sample Depth (ft)	Virgin Compression Index (strain basis)	Recompression Index (strain basis)	Overconsolidation Ratio
5.0-5.5	.084	.008	>5

DIRECT SHEAR TESTS

A direct shear test (consolidated drained) was performed on soil sample obtained from boring B-3 at a depth of 5.0 feet to obtain strength parameters necessary for pile design. Test results indicate the sample had an effective stress friction angle of 32 degrees and a cohesion value of 0.0 psf.

COLLAPSE CONSOLIDATION TESTS

Collapse consolidation tests were performed on selected samples to evaluate the percent of soil collapse resulting from breakdown of soil bonds upon saturation. Sample saturation was effected at a pressure

of 2000 psf. Test results are presented in the following table.

Boring Number	Sample Depth (ft)	Initial Dry Density (pcf)	Initial Moisture Content (%)	Percent Collapse
B-2	15.0-15.5	82.8	11.6	1.3%
B-3	10.0-10.5	85.2	11.2	1.2%

CHEMICAL TESTS

Resistivity and sulfate tests were performed on near-surface soil samples from boring B-2 to evaluate whether site soils will react detrimentally with steel or concrete. Tests results indicate that the sample obtained from a depth of 5.0 feet had a minimum resistivity value of 4.49×10^2 ohm-cm and a soluble sulfate (SO_4) content of 156 ppm.

SITE CONDITIONS

The N2 Plant is located on a relatively flat parcel of land. Generally, the surface of the site is covered by a moderately thick (up to 4 feet) veneer of fine to coarse slag fill. Surface conditions are similar at the silo site (Hollow Electrode), however, the site slopes gently downward towards the north.

Below the fill veneer very stiff to stiff, sandy, silt was generally encountered in all borings to the depth investigated. The silt was occasionally interbedded with silty fine sand deposits and occasional silty clay lenses. In boring B-3 a deposit of medium dense silty sand was encountered from 41 to 43 feet. Dense silty gravel was encountered at 43 feet and the boring was terminated at that depth.

Groundwater was not encountered in any of the borings.

DISCUSSIONS AND RECOMMENDATIONS

GENERAL

Supporting data upon which the following recommendations are based have been presented in the previous sections of this report. The recommendations presented herein are governed by the physical properties of soils encountered in the exploratory borings and the anticipated design data discussed in the PROPOSED CONSTRUCTION section. If subsurface conditions other than those described herein are encountered in conjunction with construction, and/or if design and layout changes are initiated, Dames & Moore must be informed so that our recommendations can be reviewed and revised as changes or conditions may require.

FOUNDATION RECOMMENDATIONS

SPREAD AND CONTINUOUS FOOTING SUPPORT

Results of our analyses indicate that conventional shallow spread, isolated mats, and/or continuous wall footings established upon suitable stiff to very stiff silt deposits or upon properly compacted structural fill extending to suitable silt deposits may be used to support anticipated structures. Shallow spread or continuous wall footings with a minimum dimension of 1.5 feet may be proportioned using an allowable net bearing pressure of 2,000 psf for dead load plus real load conditions.

The term "net bearing pressure" refers to the pressure imposed by the portion of the structure located above the lowest adjacent grade. Therefore, the weight of the footing and backfill above the lowest adjacent grade may be neglected. For total load conditions, i.e. the combination of all dead loads, infrequently applied live loads, wind, and seismic loads, the recommended bearing pressure may be increased by 33 percent.

Site soils are somewhat moisture sensitive and subject to minor collapse upon saturation. Although the percentage of collapse is on the order of 1.2%, this could account for potential settlement of 3 to 4 inches if the entire silt deposit were to become saturated. Saturation of the entire silt profile is unlikely, however, settlement in excess of one inch would not be unrealistic if portions of the deposit were to become saturated. Mitigation measures presented in the MOISTURE CONTROL RECOMMENDATIONS section of this report should be followed to minimize potential excessive settlement due to soil collapse.

INSTALLATION

All foundations exposed to the full effects of frost should be established at a minimum depth of 3.0 feet below the lowest adjacent final grade. Interior footings, that are not subjected to the full effects of frost may be established at higher elevations, however, a minimum depth of embedment of 18 inches is recommended for confinement purposes. The minimum recommended footing width is 18 inches for continuous wall footings and 24 inches for isolated spread footings.

Under no circumstances should foundations be established upon non-engineered site fill, loose or disturbed natural site soils or disturbed granular structural fill, sod, rubbish, construction debris, frozen soil, or within standing water. If unsuitable materials are encountered at footing elevations, these materials should be totally removed and replaced with compacted granular structural fill or lean concrete. Prior to placement of footings, granular structural fill or lean concrete, exposed natural soils should be scarified to a depth of 8 inches and recompacted to 95 percent of the maximum dry density as determined by ASTM D-1557.

If footings are established on structural fill, the width of granular structural fill at the bottom of footing excavations should be equal to the width of the footing plus one lateral foot for each foot of fill thickness below the footing. For example, if the footing is three feet wide and the fill is three feet deep, then the

total width of granular structural fill at the bottom of the excavation should be six feet. The width of granular structural fill at the base of the footing will be dependent on the slope of the excavation walls. As a minimum, granular structural fill should extend at least 6 inches beyond the base of the footing in all directions. All granular structural fill should be placed in lifts not exceeding 8 inches in loose thickness and compacted to a minimum of 95 percent of the maximum dry density as determined by the ASTM[1] D-1557 (AASHTO[2] T-180) method of compaction.

FOOTING SETTLEMENT

Settlement of footings designed in accordance with the above recommendations will be dependent upon the loads applied and on the footing depth and width. Foundations designed and installed in accordance with the above recommendations and supporting maximum loads as described in the PROPOSED CONSTRUCTION section are expected to experience settlements indicated in the table on the following page.

In order to estimate tank settlement it is assumed that the tanks will be supported on 2 cradles established on isolated spread footings or on a continuous mat footing. For two cradles, footings are expected to be on the order of 11.5 feet square and supporting loads of 257 kips. For a continuous mat foundation, loads on the order of 600 psf are anticipated for a 12.5 x 78 ft mat.

For the Cold Box structure a 13 square foot foundation supporting a load of 275 kips (approximately 1700 psf) was utilized in the analysis. Consolidation settlement rather than immediate settlement was utilized in all analyses. Potential collapse settlement resulting from soil saturation was not included in the settlement amounts shown.

---

1 American Society of Testing and Materials
2 American Association of State Highway and Transportation Officials

FOOTINGS ON SUITABLE STIFF TO VERY STIFF SILT

Footing Size (ft)	Allowable Load (psf)	Total Load on Footing (kips)	Estimated Maximum Settlement (inches)
1.5 Wall	2000	2.0 kips/lf	0.2-0.4
4.0 x 4.0 Spread	2000	32 kips	0.3-0.5
11.5 x 11.5 Spread	2000	264 kips	0.45-0.6
*12.5 x 78 Mat (Tank)	600 (anticipated load)	515 kips	0.3-0.4
13.0 x 13.0 Spread (Cold Box)	1700 (anticipated load)	275 kips	0.5-0.6

Differential settlements are expected to be less than 1/2 of the indicated total settlement.

*If cradles established on isolated spread foundations are utilized for tank support, we recommend that net allowable bearing pressures be limited to 1500 psf to limit estimated settlement to less than 1/2 inch. Alternatively, the upper 2 to 3 feet of natural silt soils underlying foundations could be removed and replaced with relatively incompressible granular structural fill. Limiting net bearing pressures to 1500 psf or replacing the upper 2 to 3 feet of natural soil below the foundation with structural fill is also recommended for the Cold Box in order to maintain settlements to less than 1/2 inch. Pile foundations should also be considered to eliminate potential settlement from soil collapse.

EARTHWORK

SITE PREPARATION

Preparation of the site for construction should include the removal of all debris, rubble, existing non-engineered fill material, and other deleterious material from areas that will ultimately be structurally loaded. Well graded slag fill, that meets the gradation requirements as noted in the table on page 12 for granular structural fill, may be utilized as granular structural fill provided the slag is relatively free of

deleterious material. Subsequent to the removal of deleterious material and prior to placement of structural fill, pavement, or foundations, the subgrade should be proof rolled by passing moderately loaded, rubber tire-mounted, construction equipment over the surface at least twice. If soft or loose soils are identified, such material should be removed and replaced with granular structural fill. Prior to placement of structural fill, lean concrete, pavement or foundations, the subgrade should be scarified to a depth of 8 inches and recompacted to a minimum of 95% of the maximum dry density as determined by ASTM D-1557.

In those areas where soils underlying areas to be structurally loaded have been disturbed, they should be scarified and recompacted to structural fill standards prior to the placement of structural fill or foundations. Compaction of disturbed soils should be as recommended for structural fill in later sections of this report.

FILL MATERIAL

Structural fill is defined as all soils placed that will be subjected to structural loads such as imposed by footings, floor slabs, or pavements. Gradation requirements for non-frost susceptible structural fill are presented below:

SIEVE SIZE	GRADATION PERCENT PASSING
1.5 inch	100
3/4 inch	60-90
No. 4	35-60
No. 40	10-25
No. 200	0-5

Non-frost susceptible structural fill is pervious, contains little or no fines and is well graded to develop stability from grain-to-grain contact. Compaction requirements are as presented in the FILL PLACEMENT AND COMPACTION section of this report. Due to the noncohesive nature of the

material, non-frost susceptible structural fill may be difficult to handle and compact unless confined. If utilized, non-frost susceptible structural fill must have the same load bearing capacity as granular structural fill.

Granular structural fill is defined as fill material that is imported onto the site from an approved fill source or granular site soils that meet the requirements for granular structural fill. Gradation requirements are presented below:

SIEVE SIZE	GRADATION PERCENT PASSING	GRADATION TOLERANCE
1.0 inch	100	0
1/2 inch	85	±6
No. 4	55	±6
No. 16	31	±4
No. 200	9	±2

The fines content (less than 200 sieve) should have a liquid limit not greater than 25 percent and a plasticity index not greater than 6 percent. Well graded slag fill that meets the gradation presented above may be utilized as granular structural fill. Compaction requirements are as presented in the FILL PLACEMENT AND COMPACTION section of this report.

Nonstructural site grading fill is defined as fill material not designated as structural fill and may consist of any cohesive or granular material free of significant amounts of deleterious substances. Nonstructural site grading fill may be placed in lifts not exceeding 12 inches in loose thickness and compacted by passing construction, spreading, or hauling equipment over the surface a minimum of two times.

FILL PLACEMENT AND COMPACTION

All non-frost susceptible structural fill and granular structural fill should be placed in lifts not exceeding 8 inches in loose thickness and compacted to a minimum of 95 percent of the maximum dry density as

determined by the ASTM D-1557 (AASHTO T-180) method of compaction. Granular structural fill should extend at least six inches beyond the edges of slabs or pavement in all directions for each foot of fill below slabs or pavement.

MOISTURE CONTROL RECOMMENDATIONS

To minimize potential additional settlement of structures due to soil collapse, the following moisture control measures should be followed:

1. Installation of rain gutters and downspouts to collect and route precipitation from building areas. Collected water should be discharged away and down-gradient from all structures.

2. Properly design pavement and parking areas that will channel water away from, and down-gradient of all structures, and that will not allow water to pond on the site.

3. Pavement, concrete, or impervious geomembranes should be installed around critical structures and extend out from the walls a minimum of 15 feet and slope away from the structure.

4. In areas where infiltration could be anticipated, such as process or piping areas, impervious membranes should be installed to collect potential leakage and prevent infiltration into underlying soils.

EXCAVATION RECOMMENDATIONS

Temporary construction excavations up to 4 feet in depth in stiff silty soils may be constructed with near-vertical side-slopes. Temporary excavations through slag fill may experience significant ravelling problems and the top of excavations should be benched back. Deeper excavations in natural silty soils, on the order of 8 feet in depth, should be constructed with side-slopes no steeper than one horizontal to one vertical (1H:1V). Excavations deeper than 8 feet are not anticipated. If soils adjacent to excavations become wet or saturated, flatter slopes may be required to maintain stability. All excavations should be frequently observed by qualified personnel to evaluate stability.

EARTH PRESSURE AND LATERAL RESISTANCE

Lateral forces imposed upon foundations due to wind or seismic forces may be resisted by the development of passive earth pressures and friction between the base of the footing and the supporting soils. In determining the frictional resistance, a coefficient of friction of 0.35 for suitable stiff to very stiff silty soils or 0.45 for suitable slag fill or granular structural fill against concrete should be used.

Passive resistance provided by suitable site soils may be considered equivalent to a fluid having a density of 300 pounds per cubic foot. Passive resistance provided by properly compacted granular structural fill may be considered equivalent to a fluid having a density of 450 pounds per cubic foot. A combination of passive earth resistance and friction may be utilized provided the total is divided by 1.5.

It is assumed that mat foundations associated with anticipated structures will be established on stiff to very stiff silty soils. Based on empirical correlations with soil type ([3]Bowles, 1988, [4]Yoder and Witczak, 1975) a modulus of subgrade reaction of 100 - 120 pci is recommended for mat design.

SEISMIC CONSIDERATIONS

The site is located within a "Zone 3" area as defined by the seismic risk map of the United States in the Uniform Building Code (UBC) 1991 Edition. As a minimum, the criteria stated in the 1991 edition of the UBC for Zone 3 seismic areas should be incorporated into the design of the proposed facility. Additionally, a site coefficient (S Factor) of 1.0, as defined by the UBC Table No. 23-J, is recommended for design purposes.

---

[3]Bowles, J.E., 1988, Foundation Analysis and Design; McGraw-Hill, pg. 409
[4]Yoder, E.J., 1975, Principles of Pavement Design; John Wiley & Sons, Inc., pg. 237.

RESISTIVITY AND CORROSION PROTECTION

Resistivity and sulfate tests were performed on near-surface soil samples from boring B-2 to evaluate whether site soils will react detrimentally with steel or concrete. Tests results indicate that the sample obtained from a depth of 5.0 feet had a minimum resistivity value of 4.49×10^2 ohm-cm. This value is indicative of a "corrosive" ([5]Chaker, 1979) environment and mitigation measures such as cathodic protection, coatings, or increasing the thickness of below-grade metal to allow for wastage are recommended for any below-grade steel portions of proposed structures.

Sulfate test results indicate that sample had a soluble sulfate (SO_4) content of 156 ppm. Based on these results the relative degree of sulfate attack would be considered "negligible" and Type I cement is satisfactory for concrete foundation elements in contact with natural site soils.

PILE FOUNDATIONS

It is anticipated that steel driven piles will be utilized for support of the silo structure. Due to anticipated loads, we recommend that all pile tips be established within the dense silty gravel encountered at approximately 43 feet below the current surface grade. A minimum depth of embedment of 5.0 feet into the silty gravel is recommended.

Downward and uplift capacities were analyzed for 12 and 14 inch diameter (3/8 inch wall thickness) steel, closed-end, pipe piles. The resulting ultimate capacities are presented on Plates 6A and 6B. No safety factors are included in these capacities. A minimum safety factor of 2.5 is recommended for pile design under real load conditions. For total loads, a minimum safety factor of 2.0 is recommended. No

[5]Chaker, Victor - "Simplified Method for the Electrical Soil Resistivity Measurement", ASTM STP 741, Nov. 1979, pp. 61.

reduction for group efficiency will be required, provided piles are spaced a minimum of three pile diameters center-to-center. The working stresses in the piles themselves should not be exceeded.

Ultimate uplift capacities for closed-end steel pipe piles may be determined using the skin friction capacities presented on Plates 6A and 6B. A minimum safety of 2.5 is recommended. The weight of the pile should be added to the frictional capacity to determine the total uplift capacity.

LATERAL CAPACITIES

Lateral capacities for both 12 and 14 inch diameter (3/8 thick walls) pipe piles, were determined considering a "fixed" pile head condition. This condition is appropriate since piles will be connected with tie beams and a concrete cap. Lateral capacities were calculated using "LPILE1", a computer program by Lymon C. Reese that determines the response of laterally loaded piles in nonlinear soil. "LPILE1" models soil behavior with p-y curves. See the Appendix for input parameters and program output. Pile head deflections for various ultimate lateral loads are presented in the following table. No safety factors are applied. A 100 kip axial load was assumed for each pile.

PILE DIAMETER	LATERAL LOAD (KIPS) AND RESULTANT DEFLECTION (INCHES)				
12 INCH	6 kips for 0.09 inches	9 kips for 0.14 inches	12 kips for 0.181 inches	15 kips for 0.233 inches	18 kips for 0.293 inches
14 INCH	8 kips for 0.107 inches	12 kips for 0.16 inches	16 kips for 0.213 inches	20 kips for 0.274 inches	24 kips for 0.345 inches

Using Raytheon's criteria that pile head deflections must be limited to 0.25 inches, lateral loads for 12 inch diameter pipe piles should be limited to less than 15 kips and lateral loads for 14 inch diameter pipe piles should be limited to 17 kips or less.

For additional analyses of laterally loaded piles, allowable lateral soil pressures of 100 to 125 psf/ft of depth below natural grade (as recommended in UBC, 1991 edition, Table No. 29-B) may be utilized. The coefficient of lateral subgrade reaction (tons/ft^3) may determined utilizing the following formula as presented in NAVFAC DM-7.2:

$K_h = fz/D$ where: f= coefficient of variation of lateral subgrade reaction (tons/ft^3)
f= 10 to 15 tons/ft^3 for silty site soils

z= depth (feet)

D= width/diameter of loaded area (feet)

INSTALLATION

To develop desired capacities, while maintaining an extra margin of driving capacity, piles should be driven using a hammer with a rated energy on the order of 35,000 foot-pounds per blow. In order to monitor pile capacities we recommend completing a wave equation analysis to establish pile driving criteria, or performing pile load tests.

CONSTRUCTION OBSERVATIONS AND APPROVALS

All aspects of foundation excavations and pile installation should be observed by Dames & Moore to verify projected site conditions. Any variation from projected conditions should be immediately reported so that recommendations may be revised if necessary. Also, all aspects of foundation construction should be monitored to document that installation and construction has been performed in accordance with recommendations presented herein.

oOo

The following Plates are attached and complete this report:

Plate 1 - Vicinity Map
Plate 2 - Plot Plan
Plate 3 - Soil Sampler Type-U
Plate 4 - Unified Soil Classification System
Plate 5 - Logs of Borings
Plates 6A and 6B - Ultimate Pile Capacities

Appendix - LPILE1 input parameters and program output

Respectfully Submitted,

DAMES & MOORE, INC.

John F. Wallace, P.E.
Manager, Engineering and Design Services
Professional Engineer No. 5988
State of Idaho

Russell Owens, P.E.
Senior Geotechnical Engineer

PROFESSIONAL ENGINEER REGISTERED #5988 STATE OF IDAHO JOHN F. WALLACE

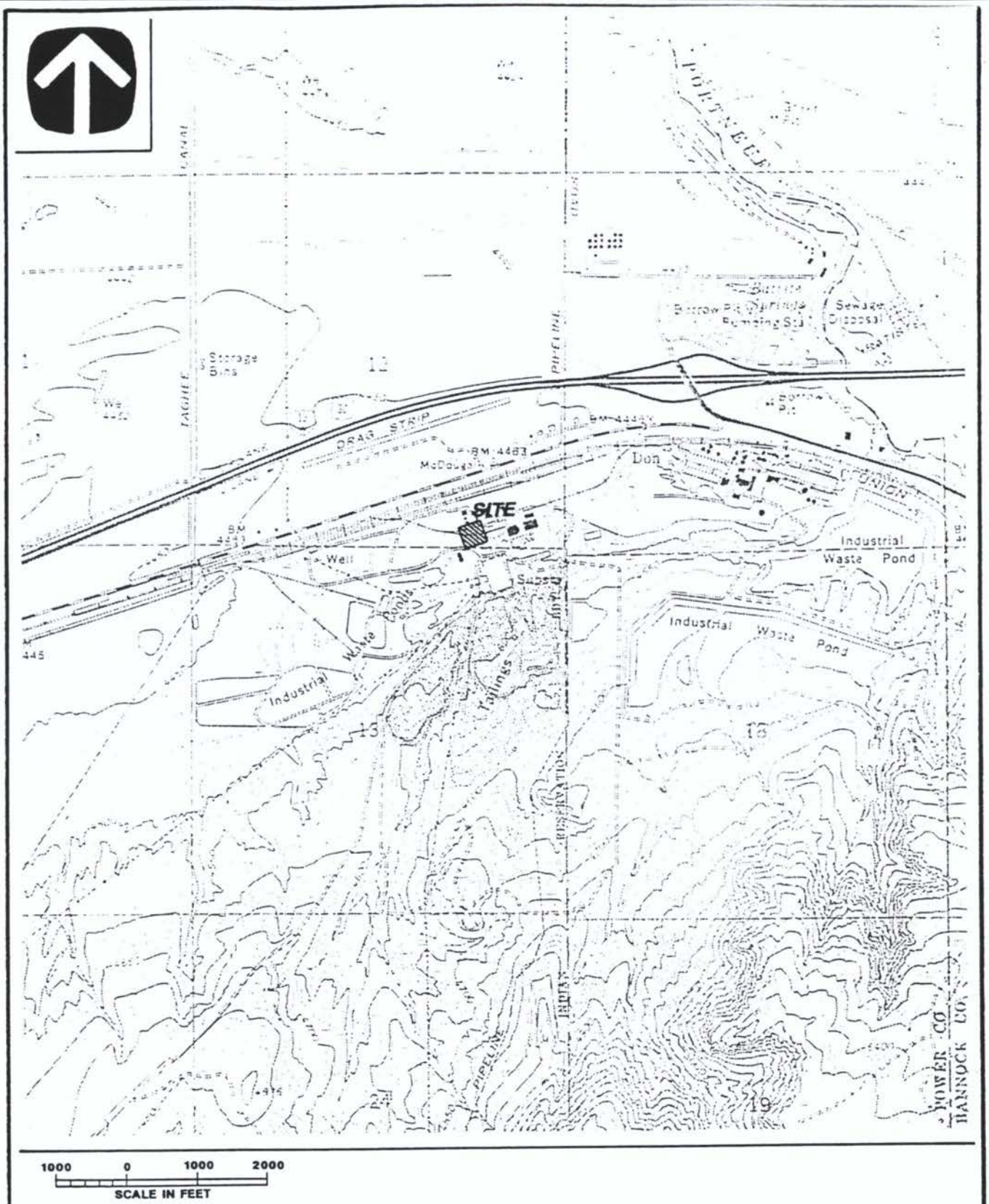

1000 0 1000 2000
SCALE IN FEET

VICINITY MAP

REFERENCE-
ADAPTED FROM U.S.G.S. TOPO MAP
"MICHAUD, IDAHO," 1971,
PHOTOINSPECTED 1974.

Dames & Moore

PLATE 1

FILE 01003-166-162 BY ____ DATE ____ CHECKED BY ____ DATE ____

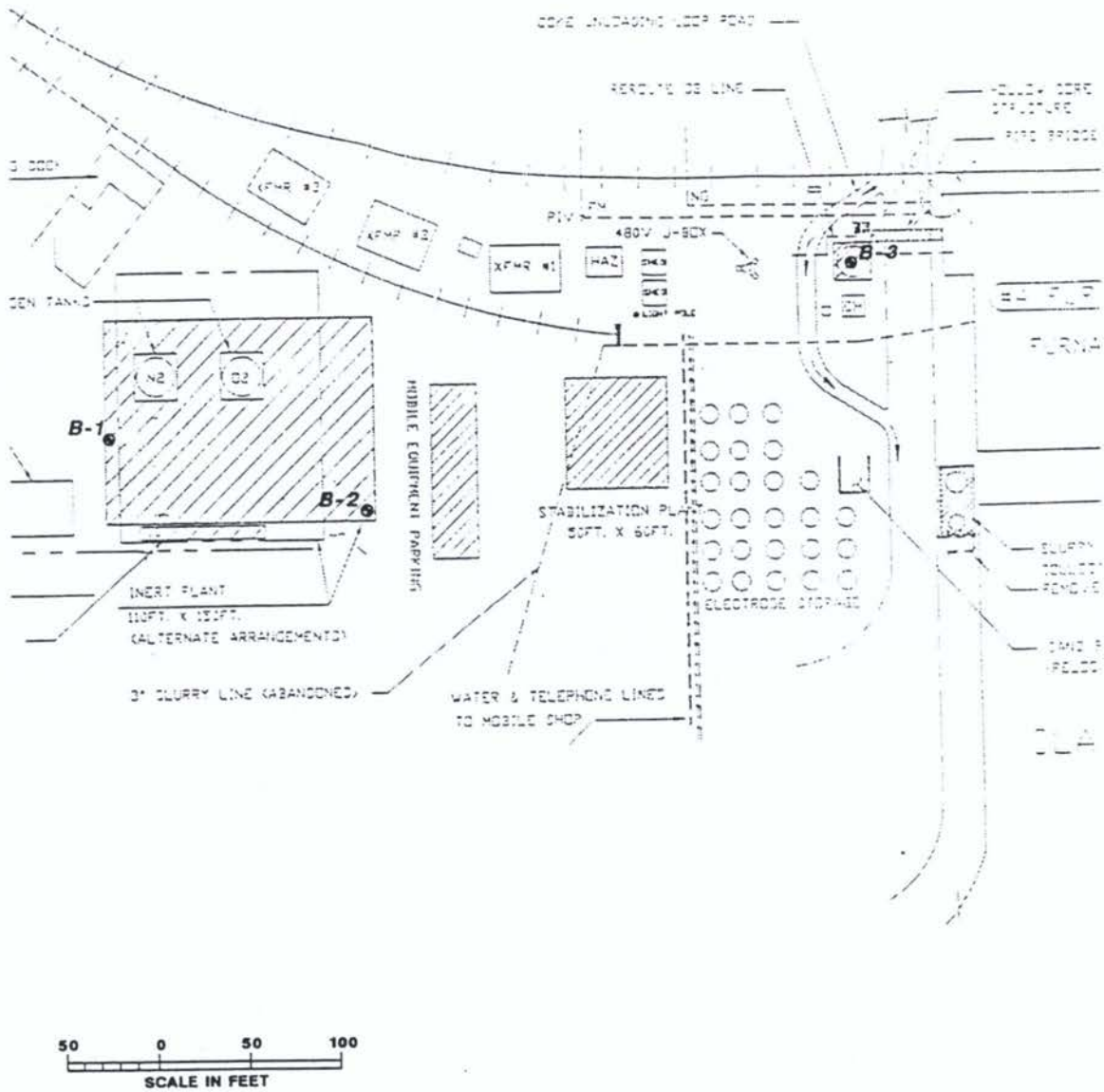

50 0 50 100
SCALE IN FEET

PLOT PLAN

REFERENCE-
- ADAPTED FROM DRAWING SUBTITLED, "OPTION #1," PROVIDED BY CLIENT, UNNUMBERED AND UNDATED.

Dames & Moore

PLATE 2

FILE 01003-165-162 BY ____ DATE ____ CHECKED BY ____ DATE ____

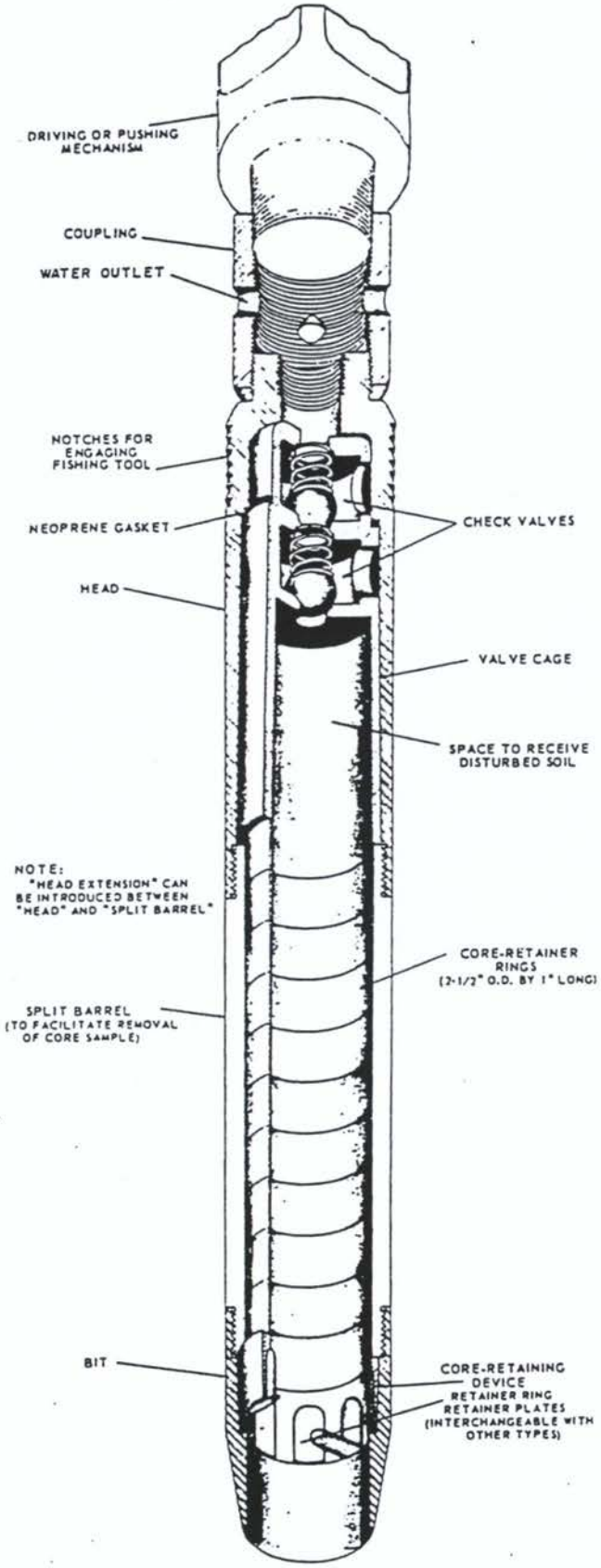

ALTERNATE ATTACHMENT

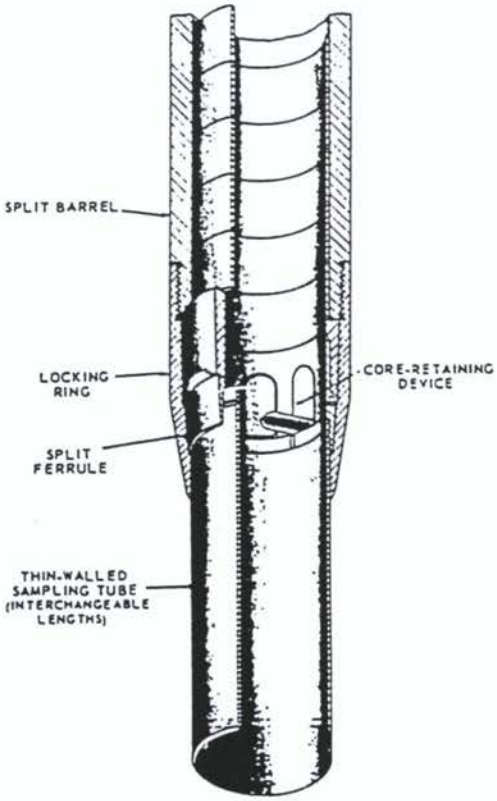

SOIL SAMPLER TYPE U

U. S. PATENT NO. 2,318,062

Dames & Moore

MAJOR DIVISIONS			GRAPH SYMBOL	LETTER SYMBOL	TYPICAL DESCRIPTIONS
COARSE GRAINED SOILS	GRAVEL AND GRAVELLY SOILS (MORE THAN 50% OF COARSE FRACTION RETAINED ON No. 4 SIEVE)	CLEAN GRAVELS (LITTLE OR NO FINES)		GW	WELL-GRADED GRAVELS, GRAVEL-SAND MIXTURES, LITTLE OR NO FINES
				GP	POORLY-GRADED GRAVELS, GRAVEL-SAND MIXTURES, LITTLE OR NO FINES
		GRAVELS WITH FINES (APPRECIABLE AMOUNT OF FINES)		GM	SILTY GRAVELS, GRAVEL-SAND-SILT MIXTURES
				GC	CLAYEY GRAVELS, GRAVEL-SAND-CLAY MIXTURES
	SAND AND SANDY SOILS (MORE THAN 50% OF COARSE FRACTION PASSING No. 4 SIEVE)	CLEAN SAND (LITTLE OR NO FINES)		SW	WELL-GRADED SANDS, GRAVELLY SANDS, LITTLE OR NO FINES
				SP	POORLY-GRADED SANDS, GRAVELLY SANDS, LITTLE OR NO FINES
		SANDS WITH FINES (APPRECIABLE AMOUNT OF FINES)		SM	SILTY SANDS, SAND-SILT MIXTURES
MORE THAN 50% OF MATERIAL IS LARGER THAN No. 200 SIEVE SIZE				SC	CLAYEY SANDS, SAND-CLAY MIXTURES
FINE GRAINED SOILS	SILTS AND CLAYS	LIQUID LIMIT LESS THAN 50		ML	INORGANIC SILTS AND VERY FINE SAND, ROCK FLOUR, SILTY OR CLAYEY FINE SANDS OR CLAYEY SILTS WITH SLIGHT PLASTICITY
				CL	INORGANIC CLAYS OF LOW TO MEDIUM PLASTICITY, GRAVELLY CLAYS, SANDY CLAYS, SILTY CLAYS, LEAN CLAYS
				OL	ORGANIC SILTS AND ORGANIC SILTY CLAYS OF LOW PLASTICITY
	SILTS AND CLAYS	LIQUID LIMIT GREATER THAN 50		MH	INORGANIC SILTS, MICACEOUS OR DIATOMACEOUS FINE SAND OR SILTY SOILS
				CH	INORGANIC CLAYS OF HIGH PLASTICITY, FAT CLAYS
MORE THAN 50% OF MATERIAL IS SMALLER THAN No. 200 SIEVE SIZE				OH	ORGANIC CLAYS OF MEDIUM TO HIGH PLASTICITY, ORGANIC SILTS
HIGHLY ORGANIC SOILS				PT	PEAT, HUMUS, SWAMP SOILS WITH HIGH ORGANIC CONTENTS

NOTE: DUAL SYMBOLS ARE USED TO INDICATE BORDERLINE SOIL CLASSIFICATIONS.

UNIFIED SOIL CLASSIFICATION SYSTEM

Dames & Moore

FILE ____ BY ____ DATE ____ CHECKED BY ____ DATE ____

BORING B-1

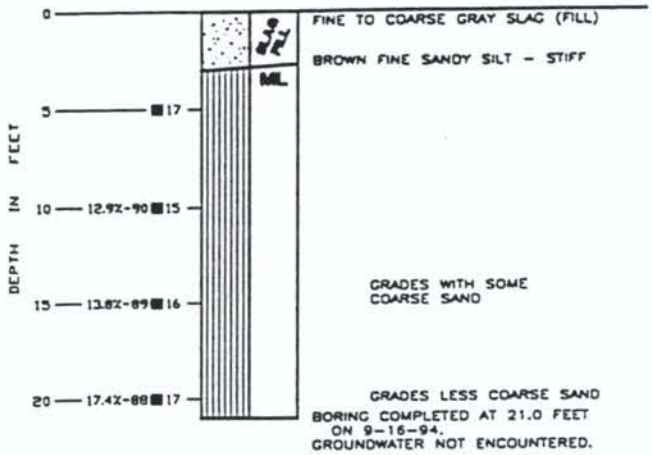

BORING B-2

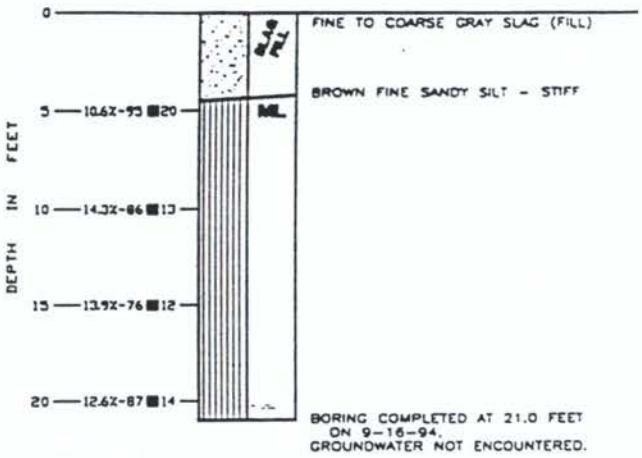

BORING B-3

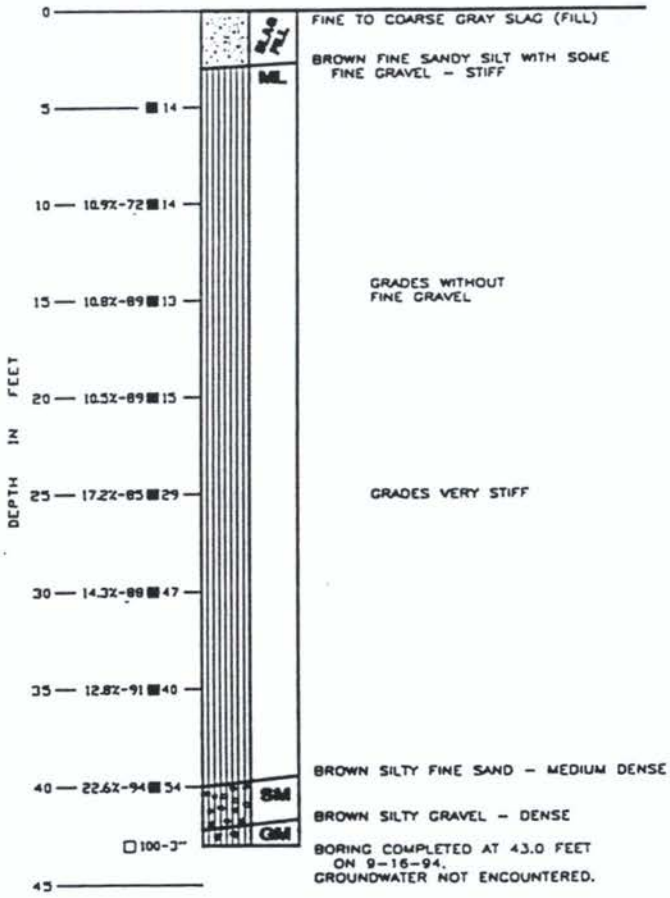

KEY

A - B ■ C

- A FIELD MOISTURE EXPRESSED AS A PERCENTAGE OF THE DRY WEIGHT OF SOIL
- B DRY DENSITY EXPRESSED IN LBS. PER CUBIC FOOT
- C BLOWS REQUIRED TO DRIVE A D&M TYPE U SAMPLER ONE FOOT WITH A 140 LB. HAMMER DROPPING 30 INCHES
- ■ DEPTH AT WHICH UNDISTURBED SAMPLE WAS EXTRACTED

LOG OF BORINGS

Dames & Moore

FILE 01003-166-162 (\DVG\FHC\PDCID_1.DVG) BY _____ DATE _____ CHECKED BY _____ DATE _____

ULTIMATE PILE CAPACITY (KIPS)

12 INCH CLOSED END PIPE PILE

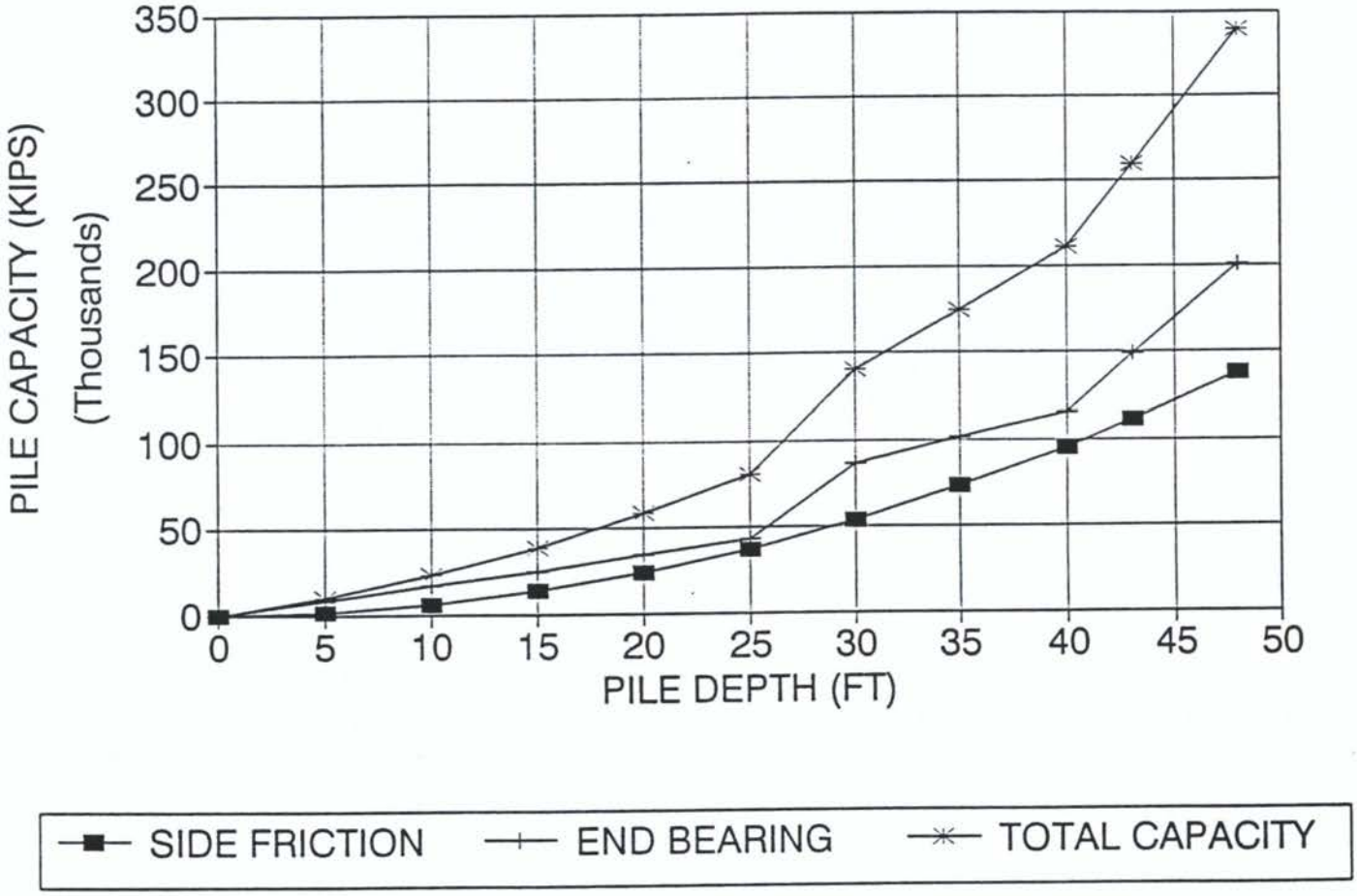

MIN S.F = 2.5

ULTIMATE PILE CAPACITY (KIPS)

14 INCH CLOSED END PIPE PILE

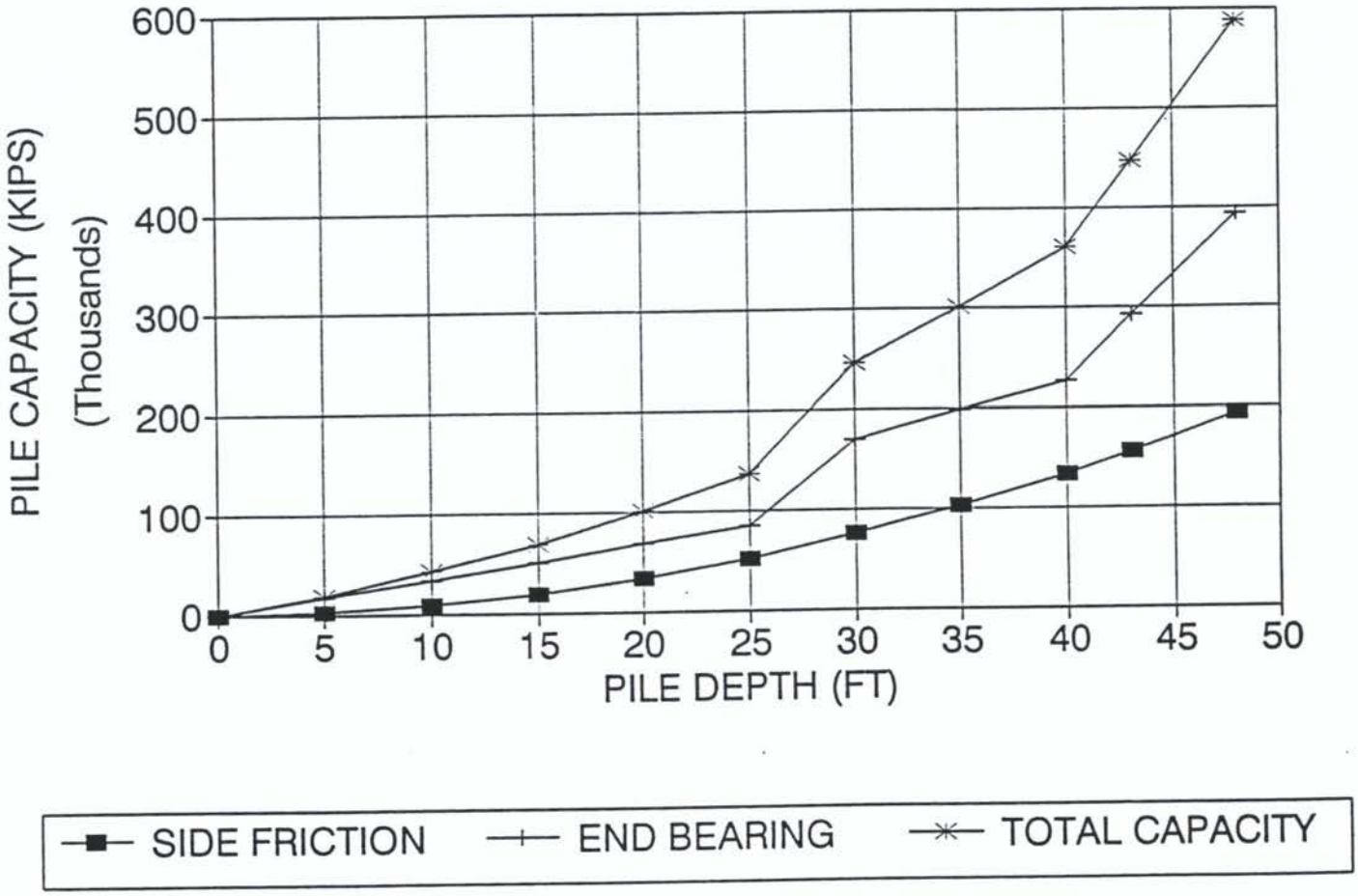

```
*****************************************************
*    PROGRAM LPILE1                                 *
*    (C) COPYRIGHT 1986 ENSOFT, INC.                *
*    ALL RIGHTS RESERVED                            *
*   ---------------------------------------------   *
*                                                   *
*              PREPARED ESPECIALLY FOR              *
*                                                   *
*           DAMES & MOORE AT SALT LAKE CITY         *
*             250 E. BROADWAY SUITE 200             *
*                SALT LAKE CITY, UTAH               *
*                                                   *
*                  LICENSE NO. 158                  *
*                                                   *
*****************************************************
```

PROGRAM LPILE1
(C) COPYRIGHT 1985 ENSOFT, INC.
ALL RIGHTS RESERVED

FMC SILO PILES, - 12 inch steel pipe pile, 3/8 wall thickness, fixed head

UNITS--ENGLISH UNITS

INPUT INFORMATION

THE LOADING IS STATIC

PILE GEOMETRY AND PROPERTIES

PILE LENGTH = 576.00 IN
2 POINTS

X	DIAMETER	MOMENT OF INERTIA	AREA	MODULUS OF ELASTICITY
IN	IN	IN**4	IN**2	LBS/IN**2
.00	12.000	.279D+03	.146D+02	.290D+08
576.00	12.000	.279D+03	.146D+02	.290D+08

SOILS INFORMATION

X AT THE GROUND SURFACE = .00 IN

4 LAYER(S) OF SOIL

LAYER 1
THE SOIL IS A SAND
X AT THE TOP OF THE LAYER = .00 IN
X AT THE BOTTOM OF THE LAYER = 360.00 IN
MODULUS OF SUBGRADE REACTION = .250D+02 LBS/IN**3

```
LAYER  2
THE SOIL IS A SAND
X AT THE TOP OF THE LAYER          =     360.00 IN
X AT THE BOTTOM OF THE LAYER       =     480.00 IN
MODULUS OF SUBGRADE REACTION       =   .600D+02 LBS/IN**3

LAYER  3
THE SOIL IS A SAND
X AT THE TOP OF THE LAYER          =     480.00 IN
X AT THE BOTTOM OF THE LAYER       =     516.00 IN
MODULUS OF SUBGRADE REACTION       =   .900D+02 LBS/IN**3

LAYER  4
THE SOIL IS A SAND
X AT THE TOP OF THE LAYER          =     516.00 IN
X AT THE BOTTOM OF THE LAYER       =     660.00 IN
MODULUS OF SUBGRADE REACTION       =   .150D+03 LBS/IN**3
```

DISTRIBUTION OF EFFECTIVE UNIT WEIGHT WITH DEPTH

6 POINTS

X,IN	WEIGHT,LBS/IN**3
.00	.60D-01
480.00	.60D-01
480.00	.66D-01
516.00	.66D-01
516.00	.72D-01
660.00	.72D-01

DISTRIBUTION OF STRENGTH PARAMETERS WITH DEPTH

6 POINTS

X,IN	C,LBS/IN**2	PHI,DEGREES	E50
.00	.000D+00	.300D+02	-----
480.00	.000D+00	.300D+02	-----
480.00	.000D+00	.330D+02	-----
516.00	.000D+00	.330D+02	-----
516.00	.000D+00	.350D+02	-----
660.00	.000D+00	.350D+02	-----

BOUNDARY AND LOADING CONDITIONS

```
LOADING NUMBER   1

BOUNDARY CONDITION CODE                =          2
LATERAL LOAD AT THE PILE HEAD          =   .600D+04 LBS
SLOPE AT THE PILE HEAD                 =   .000D+00 IN/IN
AXIAL LOAD AT THE PILE HEAD            =   .100D+06 LBS

LOADING NUMBER   2

BOUNDARY CONDITION CODE                =          2
LATERAL LOAD AT THE PILE HEAD          =   .900D+04 LBS
SLOPE AT THE PILE HEAD                 =   .000D+00 IN/IN
AXIAL LOAD AT THE PILE HEAD            =   .100D+06 LBS
```

LOADING NUMBER 3

BOUNDARY CONDITION CODE	=	2
LATERAL LOAD AT THE PILE HEAD	=	.120D+05 LBS
SLOPE AT THE PILE HEAD	=	.000D+00 IN/IN
AXIAL LOAD AT THE PILE HEAD	=	.100D+06 LBS

LOADING NUMBER 4

BOUNDARY CONDITION CODE	=	2
LATERAL LOAD AT THE PILE HEAD	=	.150D+05 LBS
SLOPE AT THE PILE HEAD	=	.000D+00 IN/IN
AXIAL LOAD AT THE PILE HEAD	=	.100D+06 LBS

LOADING NUMBER 5

BOUNDARY CONDITION CODE	=	2
LATERAL LOAD AT THE PILE HEAD	=	.180D+05 LBS
SLOPE AT THE PILE HEAD	=	.000D+00 IN/IN
AXIAL LOAD AT THE PILE HEAD	=	.100D+06 LBS

FINITE-DIFFERENCE PARAMETERS

NUMBER OF PILE INCREMENTS	=	48
DEFLECTION TOLERANCE ON DETERMINATION OF CLOSURE	=	.100D-05 IN
MAXIMUM NUMBER OF ITERATIONS ALLOWED FOR PILE ANALYSIS	=	100
MAXIMUM ALLOWABLE DEFLECTION	=	.12D+03 IN

OUTPUT CODES

KOUTPT = 1
KPYOP = 1
INC = 1

O U T P U T I N F O R M A T I O N

LOADING NUMBER 1

BOUNDARY CONDITION CODE	=	2
LATERAL LOAD AT THE PILE HEAD	=	.600D+04 LBS
SLOPE AT THE PILE HEAD	=	.000D+00 IN/IN
AXIAL LOAD AT THE PILE HEAD	=	.100D+06 LBS

X IN	DEFLECTION IN	MOMENT LBS-IN	SHEAR LBS	SOIL REACTION LBS/IN	TOTAL STRESS LBS/IN**2	FLEXURAL RIGIDITY LBS-IN**2
.00	.901D-01	-.284D+06	.600D+04	.000D+00	.130D+05	.809D+10
12.00	.876D-01	-.212D+06	.584D+04	-.263D+02	.114D+05	.809D+10
24.00	.813D-01	-.143D+06	.539D+04	-.488D+02	.992D+04	.809D+10
36.00	.724D-01	-.809D+05	.471D+04	-.652D+02	.859D+04	.809D+10
48.00	.621D-01	-.280D+05	.387D+04	-.746D+02	.745D+04	.809D+10
60.00	.514D-01	.141D+05	.296D+04	-.770D+02	.715D+04	.809D+10
72.00	.408D-01	.452D+05	.206D+04	-.735D+02	.782D+04	.809D+10
84.00	.311D-01	.655D+05	.122D+04	-.653D+02	.826D+04	.809D+10

96.00	.225D-01	.764D+05	.508D+03	-.541D+02	.849D+04	.809D+10
108.00	.154D-01	.793D+05	-.654D+02	-.415D+02	.855D+04	.809D+10
120.00	.957D-02	.761D+05	-.486D+03	-.287D+02	.849D+04	.809D+10
132.00	.514D-02	.687D+05	-.760D+03	-.170D+02	.833D+04	.809D+10
144.00	.193D-02	.586D+05	-.904D+03	-.694D+01	.811D+04	.809D+10
156.00	-.238D-03	.475D+05	-.940D+03	.926D+00	.787D+04	.809D+10
168.00	-.156D-02	.364D+05	-.895D+03	.654D+01	.763D+04	.809D+10
180.00	-.223D-02	.262D+05	-.795D+03	.100D+02	.741D+04	.809D+10
192.00	-.243D-02	.174D+05	-.665D+03	.117D+02	.722D+04	.809D+10
204.00	-.233D-02	.103D+05	-.524D+03	.119D+02	.707D+04	.809D+10
216.00	-.204D-02	.481D+04	-.387D+03	.110D+02	.695D+04	.809D+10
228.00	-.167D-02	.928D+03	-.264D+03	.949D+01	.687D+04	.809D+10
240.00	-.127D-02	-.159D+04	-.161D+03	.765D+01	.688D+04	.809D+10
252.00	-.912D-03	-.301D+04	-.804D+02	.575D+01	.691D+04	.809D+10
264.00	-.604D-03	-.359D+04	-.220D+02	.398D+01	.693D+04	.809D+10
276.00	-.359D-03	-.359D+04	.168D+02	.248D+01	.693D+04	.809D+10
288.00	-.178D-03	-.323D+04	.393D+02	.128D+01	.692D+04	.809D+10
300.00	-.540D-04	-.268D+04	.494D+02	.405D+00	.691D+04	.809D+10
312.00	.220D-04	-.206D+04	.508D+02	-.172D+00	.689D+04	.809D+10
324.00	.614D-04	-.147D+04	.468D+02	-.497D+00	.688D+04	.809D+10
336.00	.746D-04	-.944D+03	.400D+02	-.626D+00	.687D+04	.809D+10
348.00	.709D-04	-.509D+03	.326D+02	-.617D+00	.686D+04	.809D+10
360.00	.583D-04	-.161D+03	.231D+02	-.959D+00	.685D+04	.809D+10
372.00	.428D-04	.491D+02	.130D+02	-.734D+00	.685D+04	.809D+10
384.00	.281D-04	.153D+03	.553D+01	-.503D+00	.685D+04	.809D+10
396.00	.162D-04	.185D+03	.709D+00	-.301D+00	.685D+04	.809D+10
408.00	.755D-05	.172D+03	-.198D+01	-.146D+00	.685D+04	.809D+10
420.00	.198D-05	.139D+03	-.309D+01	-.398D-01	.685D+04	.809D+10
432.00	-.112D-05	.990D+02	-.319D+01	.232D-01	.685D+04	.809D+10
444.00	-.246D-05	.625D+02	-.273D+01	.528D-01	.685D+04	.809D+10
456.00	-.268D-05	.335D+02	-.206D+01	.596D-01	.685D+04	.809D+10
468.00	-.231D-05	.131D+02	-.138D+01	.530D-01	.685D+04	.809D+10
480.00	-.171D-05	.213D+00	-.797D+00	.448D-01	.685D+04	.809D+10
492.00	-.110D-05	-.619D+01	-.348D+00	.301D-01	.685D+04	.809D+10
504.00	-.608D-06	-.825D+01	-.640D-01	.172D-01	.685D+04	.809D+10
516.00	-.258D-06	-.781D+01	.103D+00	.105D-01	.685D+04	.809D+10
528.00	-.477D-07	-.584D+01	.178D+00	.204D-02	.685D+04	.809D+10
540.00	.587D-07	-.357D+01	.175D+00	-.261D-02	.685D+04	.809D+10
552.00	.102D-06	-.166D+01	.131D+00	-.471D-02	.685D+04	.809D+10
564.00	.115D-06	-.433D+00	.694D-01	-.553D-02	.685D+04	.809D+10
576.00	.121D-06	.000D+00	.000D+00	-.603D-02	.685D+04	.809D+10

OUTPUT VERIFICATION

THE MAXIMUM MOMENT IMBALANCE FOR ANY ELEMENT = .239D-08 IN-LBS
THE MAX. LATERAL FORCE IMBALANCE FOR ANY ELEMENT = -.140D-09 LBS

OUTPUT SUMMARY

PILE-HEAD DEFLECTION = .901D-01 IN
MAXIMUM BENDING MOMENT = -.284D+06 LBS-IN
MAXIMUM SHEAR FORCE = .600D+04 LBS
NO. OF ITERATIONS = 3
NO. OF ZERO DEFLECTION POINTS = 4

LOADING NUMBER 2

BOUNDARY CONDITION CODE = 2
LATERAL LOAD AT THE PILE HEAD = .900D+04 LBS
SLOPE AT THE PILE HEAD = .000D+00 IN/IN
AXIAL LOAD AT THE PILE HEAD = .100D+06 LBS

X IN *****	DEFLECTION IN **********	MOMENT LBS-IN **********	SHEAR LBS **********	SOIL REACTION LBS/IN **********	TOTAL STRESS LBS/IN**2 **********	FLEXURAL RIGIDITY LBS-IN**2 **********
.00	.135D+00	-.426D+06	.900D+04	.000D+00	.160D+05	.809D+10
12.00	.131D+00	-.318D+06	.876D+04	-.394D+02	.137D+05	.809D+10
24.00	.122D+00	-.214D+06	.809D+04	-.731D+02	.115D+05	.809D+10
36.00	.109D+00	-.121D+06	.706D+04	-.978D+02	.946D+04	.809D+10
48.00	.932D-01	-.420D+05	.581D+04	-.112D+03	.775D+04	.809D+10
60.00	.770D-01	.212D+05	.444D+04	-.116D+03	.731D+04	.809D+10
72.00	.612D-01	.678D+05	.309D+04	-.110D+03	.831D+04	.809D+10
84.00	.467D-01	.983D+05	.184D+04	-.980D+02	.896D+04	.809D+10
96.00	.338D-01	.115D+06	.762D+03	-.812D+02	.931D+04	.809D+10
108.00	.230D-01	.119D+06	-.982D+02	-.622D+02	.941D+04	.809D+10
120.00	.144D-01	.114D+06	-.730D+03	-.431D+02	.930D+04	.809D+10
132.00	.770D-02	.103D+06	-.114D+04	-.254D+02	.906D+04	.809D+10
144.00	.289D-02	.880D+05	-.136D+04	-.104D+02	.874D+04	.809D+10
156.00	-.356D-03	.713D+05	-.141D+04	.139D+01	.838D+04	.809D+10
168.00	-.234D-02	.546D+05	-.134D+04	.981D+01	.802D+04	.809D+10
180.00	-.334D-02	.393D+05	-.119D+04	.150D+02	.770D+04	.809D+10
192.00	-.365D-02	.261D+05	-.998D+03	.175D+02	.741D+04	.809D+10
204.00	-.349D-02	.154D+05	-.786D+03	.178D+02	.718D+04	.809D+10
216.00	-.306D-02	.722D+04	-.580D+03	.165D+02	.700D+04	.809D+10
228.00	-.250D-02	.139D+04	-.395D+03	.142D+02	.688D+04	.809D+10
240.00	-.191D-02	-.239D+04	-.241D+03	.115D+02	.690D+04	.809D+10
252.00	-.137D-02	-.451D+04	-.121D+03	.862D+01	.695D+04	.809D+10
264.00	-.905D-03	-.538D+04	-.330D+02	.598D+01	.697D+04	.809D+10
276.00	-.538D-03	-.538D+04	.251D+02	.371D+01	.697D+04	.809D+10
288.00	-.266D-03	-.484D+04	.589D+02	.192D+01	.695D+04	.809D+10
300.00	-.810D-04	-.401D+04	.741D+02	.607D+00	.694D+04	.809D+10
312.00	.331D-04	-.309D+04	.762D+02	-.258D+00	.692D+04	.809D+10
324.00	.920D-04	-.220D+04	.702D+02	-.746D+00	.690D+04	.809D+10
336.00	.112D-03	-.142D+04	.601D+02	-.939D+00	.688D+04	.809D+10
348.00	.106D-03	-.763D+03	.489D+02	-.926D+00	.687D+04	.809D+10
360.00	.874D-04	-.241D+03	.347D+02	-.144D+01	.685D+04	.809D+10
372.00	.641D-04	.737D+02	.194D+02	-.110D+01	.685D+04	.809D+10
384.00	.422D-04	.230D+03	.830D+01	-.755D+00	.685D+04	.809D+10
396.00	.243D-04	.277D+03	.106D+01	-.452D+00	.686D+04	.809D+10
408.00	.113D-04	.258D+03	-.296D+01	-.219D+00	.685D+04	.809D+10
420.00	.298D-05	.208D+03	-.464D+01	-.597D-01	.685D+04	.809D+10
432.00	-.168D-05	.148D+03	-.479D+01	.348D-01	.685D+04	.809D+10
444.00	-.368D-05	.938D+02	-.410D+01	.792D-01	.685D+04	.809D+10
456.00	-.402D-05	.503D+02	-.309D+01	.894D-01	.685D+04	.809D+10
468.00	-.347D-05	.196D+02	-.208D+01	.796D-01	.685D+04	.809D+10
480.00	-.257D-05	.320D+00	-.120D+01	.672D-01	.685D+04	.809D+10
492.00	-.166D-05	-.928D+01	-.522D+00	.451D-01	.685D+04	.809D+10
504.00	-.911D-06	-.124D+02	-.960D-01	.258D-01	.685D+04	.809D+10
516.00	-.387D-06	-.117D+02	.154D+00	.158D-01	.685D+04	.809D+10
528.00	-.716D-07	-.876D+01	.267D+00	.305D-02	.685D+04	.809D+10
540.00	.881D-07	-.535D+01	.262D+00	-.392D-02	.685D+04	.809D+10
552.00	.153D-06	-.249D+01	.196D+00	-.706D-02	.685D+04	.809D+10
564.00	.173D-06	-.650D+00	.104D+00	-.830D-02	.685D+04	.809D+10
576.00	.181D-06	.000D+00	.000D+00	-.904D-02	.685D+04	.809D+10

OUTPUT VERIFICATION

THE MAXIMUM MOMENT IMBALANCE FOR ANY ELEMENT = .726D-08 IN-LBS
THE MAX. LATERAL FORCE IMBALANCE FOR ANY ELEMENT = -.407D-09 LBS

OUTPUT SUMMARY

PILE-HEAD DEFLECTION	=	.135D+00	IN
MAXIMUM BENDING MOMENT	=	-.426D+06	LBS-IN
MAXIMUM SHEAR FORCE	=	.900D+04	LBS
NO. OF ITERATIONS	=	4	
NO. OF ZERO DEFLECTION POINTS	=	4	

LOADING NUMBER 3

BOUNDARY CONDITION CODE	=	2	
LATERAL LOAD AT THE PILE HEAD	=	.120D+05	LBS
SLOPE AT THE PILE HEAD	=	.000D+00	IN/IN
AXIAL LOAD AT THE PILE HEAD	=	.100D+06	LBS

X IN	DEFLECTION IN	MOMENT LBS-IN	SHEAR LBS	SOIL REACTION LBS/IN	TOTAL STRESS LBS/IN**2	FLEXURAL RIGIDITY LBS-IN**2
*****	**********	**********	**********	**********	**********	**********
.00	.181D+00	-.569D+06	.120D+05	.000D+00	.191D+05	.809D+10
12.00	.176D+00	-.424D+06	.117D+05	-.527D+02	.160D+05	.809D+10
24.00	.163D+00	-.287D+06	.108D+05	-.978D+02	.130D+05	.809D+10
36.00	.145D+00	-.162D+06	.941D+04	-.131D+03	.103D+05	.809D+10
48.00	.125D+00	-.569D+05	.775D+04	-.145D+03	.807D+04	.809D+10
60.00	.103D+00	.278D+05	.595D+04	-.155D+03	.745D+04	.809D+10
72.00	.820D-01	.903D+05	.414D+04	-.148D+03	.879D+04	.809D+10
84.00	.625D-01	.131D+06	.247D+04	-.131D+03	.967D+04	.809D+10
96.00	.453D-01	.153D+06	.103D+04	-.109D+03	.101D+05	.809D+10
108.00	.309D-01	.159D+06	-.125D+03	-.833D+02	.103D+05	.809D+10
120.00	.192D-01	.153D+06	-.972D+03	-.577D+02	.101D+05	.809D+10
132.00	.103D-01	.138D+06	-.152D+04	-.341D+02	.981D+04	.809D+10
144.00	.389D-02	.118D+06	-.181D+04	-.140D+02	.938D+04	.809D+10
156.00	-.458D-03	.954D+05	-.189D+04	.179D+01	.890D+04	.809D+10
168.00	-.311D-02	.732D+05	-.180D+04	.131D+02	.842D+04	.809D+10
180.00	-.447D-02	.527D+05	-.160D+04	.201D+02	.798D+04	.809D+10
192.00	-.488D-02	.350D+05	-.134D+04	.234D+02	.760D+04	.809D+10
204.00	-.467D-02	.207D+05	-.105D+04	.238D+02	.729D+04	.809D+10
216.00	-.409D-02	.970D+04	-.777D+03	.221D+02	.706D+04	.809D+10
228.00	-.334D-02	.189D+04	-.530D+03	.191D+02	.689D+04	.809D+10
240.00	-.256D-02	-.317D+04	-.323D+03	.154D+02	.692D+04	.809D+10
252.00	-.183D-02	-.602D+04	-.162D+03	.115D+02	.698D+04	.809D+10
264.00	-.121D-02	-.719D+04	-.446D+02	.801D+01	.700D+04	.809D+10
276.00	-.721D-03	-.720D+04	.333D+02	.498D+01	.700D+04	.809D+10
288.00	-.358D-03	-.648D+04	.787D+02	.258D+01	.699D+04	.809D+10
300.00	-.109D-03	-.537D+04	.990D+02	.819D+00	.696D+04	.809D+10
312.00	.437D-04	-.414D+04	.102D+03	-.341D+00	.694D+04	.809D+10
324.00	.123D-03	-.295D+04	.939D+02	-.995D+00	.691D+04	.809D+10
336.00	.149D-03	-.190D+04	.804D+02	-.126D+01	.689D+04	.809D+10
348.00	.142D-03	-.102D+04	.654D+02	-.124D+01	.687D+04	.809D+10
360.00	.117D-03	-.325D+03	.464D+02	-.192D+01	.686D+04	.809D+10
372.00	.859D-04	.974D+02	.261D+02	-.147D+01	.685D+04	.809D+10
384.00	.565D-04	.307D+03	.111D+02	-.101D+01	.686D+04	.809D+10
396.00	.325D-04	.370D+03	.145D+01	-.606D+00	.686D+04	.809D+10
408.00	.152D-04	.346D+03	-.395D+01	-.294D+00	.686D+04	.809D+10
420.00	.401D-05	.278D+03	-.619D+01	-.804D-01	.686D+04	.809D+10
432.00	-.222D-05	.199D+03	-.640D+01	.462D-01	.685D+04	.809D+10
444.00	-.492D-05	.126D+03	-.549D+01	.106D+00	.685D+04	.809D+10
456.00	-.538D-05	.674D+02	-.414D+01	.120D+00	.685D+04	.809D+10
468.00	-.464D-05	.263D+02	-.278D+01	.106D+00	.685D+04	.809D+10

264.00	-.158D-02	-.925D+04	-.607D+02	.104D+02	.705D+04	.809D+10
276.00	-.943D-03	-.929D+04	.410D+02	.651D+01	.705D+04	.809D+10
288.00	-.470D-03	-.838D+04	.100D+03	.339D+01	.703D+04	.809D+10
300.00	-.147D-03	-.696D+04	.127D+03	.110D+01	.700D+04	.809D+10
312.00	.524D-04	-.537D+04	.131D+03	-.409D+00	.696D+04	.809D+10
324.00	.156D-03	-.384D+04	.121D+03	-.127D+01	.693D+04	.809D+10
336.00	.192D-03	-.247D+04	.104D+03	-.161D+01	.690D+04	.809D+10
348.00	.183D-03	-.134D+04	.849D+02	-.160D+01	.688D+04	.809D+10
360.00	.151D-03	-.433D+03	.604D+02	-.249D+01	.686D+04	.809D+10
372.00	.111D-03	.117D+03	.340D+02	-.191D+01	.685D+04	.809D+10
384.00	.733D-04	.391D+03	.147D+02	-.131D+01	.686D+04	.809D+10
396.00	.424D-04	.476D+03	.206D+01	-.789D+00	.686D+04	.809D+10
408.00	.199D-04	.446D+03	-.498D+01	-.385D+00	.686D+04	.809D+10
420.00	.538D-05	.360D+03	-.794D+01	-.108D+00	.686D+04	.809D+10
432.00	-.274D-05	.258D+03	-.824D+01	.570D-01	.685D+04	.809D+10
444.00	-.629D-05	.163D+03	-.709D+01	.135D+00	.685D+04	.809D+10
456.00	-.692D-05	.880D+02	-.536D+01	.154D+00	.685D+04	.809D+10
468.00	-.599D-05	.347D+02	-.361D+01	.137D+00	.685D+04	.809D+10
480.00	-.444D-05	.109D+01	-.209D+01	.116D+00	.685D+04	.809D+10
492.00	-.288D-05	-.157D+02	-.918D+00	.784D-01	.685D+04	.809D+10
504.00	-.159D-05	-.212D+02	-.178D+00	.450D-01	.685D+04	.809D+10
516.00	-.680D-06	-.202D+02	.259D+00	.278D-01	.685D+04	.809D+10
528.00	-.131D-06	-.152D+02	.459D+00	.557D-02	.685D+04	.809D+10
540.00	.149D-06	-.928D+01	.453D+00	-.661D-02	.685D+04	.809D+10
552.00	.263D-06	-.434D+01	.340D+00	-.122D-01	.685D+04	.809D+10
564.00	.300D-06	-.113D+01	.181D+00	-.144D-01	.685D+04	.809D+10
576.00	.316D-06	.000D+00	.000D+00	-.158D-01	.685D+04	.809D+10

OUTPUT VERIFICATION

THE MAXIMUM MOMENT IMBALANCE FOR ANY ELEMENT = -.296D-08 IN-LBS
THE MAX. LATERAL FORCE IMBALANCE FOR ANY ELEMENT = .249D-09 LBS

OUTPUT SUMMARY

PILE-HEAD DEFLECTION = .233D+00 IN
MAXIMUM BENDING MOMENT = -.722D+06 LBS-IN
MAXIMUM SHEAR FORCE = .150D+05 LBS
NO. OF ITERATIONS = 10
NO. OF ZERO DEFLECTION POINTS = 4

LOADING NUMBER 5

BOUNDARY CONDITION CODE = 2
LATERAL LOAD AT THE PILE HEAD = .180D+05 LBS
SLOPE AT THE PILE HEAD = .000D+00 IN/IN
AXIAL LOAD AT THE PILE HEAD = .100D+06 LBS

X IN	DEFLECTION IN	MOMENT LBS-IN	SHEAR LBS	SOIL REACTION LBS/IN	TOTAL STRESS LBS/IN**2	FLEXURAL RIGIDITY LBS-IN**2
*****	**********	**********	**********	**********	**********	**********
.00	.293D+00	-.888D+06	.180D+05	.000D+00	.259D+05	.809D+10
12.00	.285D+00	-.671D+06	.176D+05	-.686D+02	.213D+05	.809D+10
24.00	.265D+00	-.463D+06	.164D+05	-.130D+03	.168D+05	.809D+10
36.00	.237D+00	-.273D+06	.146D+05	-.166D+03	.127D+05	.809D+10

480.00	-.343D-05	.492D+00	-.160D+01	.899D-01	.685D+04	.809D+10
492.00	-.222D-05	-.124D+02	-.700D+00	.605D-01	.685D+04	.809D+10
504.00	-.122D-05	-.165D+02	-.130D+00	.346D-01	.685D+04	.809D+10
516.00	-.519D-06	-.157D+02	.205D+00	.212D-01	.685D+04	.809D+10
528.00	-.966D-07	-.117D+02	.357D+00	.412D-02	.685D+04	.809D+10
540.00	.117D-06	-.716D+01	.351D+00	-.522D-02	.685D+04	.809D+10
552.00	.204D-06	-.334D+01	.263D+00	-.944D-02	.685D+04	.809D+10
564.00	.231D-06	-.871D+00	.139D+00	-.111D-01	.685D+04	.809D+10
576.00	.243D-06	.000D+00	.000D+00	-.121D-01	.685D+04	.809D+10

OUTPUT VERIFICATION

THE MAXIMUM MOMENT IMBALANCE FOR ANY ELEMENT = .153D-08 IN-LBS
THE MAX. LATERAL FORCE IMBALANCE FOR ANY ELEMENT = .791D-10 LBS

OUTPUT SUMMARY

PILE-HEAD DEFLECTION = .181D+00 IN
MAXIMUM BENDING MOMENT = -.569D+06 LBS-IN
MAXIMUM SHEAR FORCE = .120D+05 LBS
NO. OF ITERATIONS = 7
NO. OF ZERO DEFLECTION POINTS = 4

LOADING NUMBER 4

BOUNDARY CONDITION CODE = 2
LATERAL LOAD AT THE PILE HEAD = .150D+05 LBS
SLOPE AT THE PILE HEAD = .000D+00 IN/IN
AXIAL LOAD AT THE PILE HEAD = .100D+06 LBS

X IN	DEFLECTION IN	MOMENT LBS-IN	SHEAR LBS	SOIL REACTION LBS/IN	TOTAL STRESS LBS/IN**2	FLEXURAL RIGIDITY LBS-IN**2
*****	**********	**********	**********	**********	**********	**********
.00	.233D+00	-.722D+06	.150D+05	.000D+00	.224D+05	.809D+10
12.00	.227D+00	-.541D+06	.146D+05	-.633D+02	.185D+05	.809D+10
24.00	.210D+00	-.369D+06	.135D+05	-.120D+03	.148D+05	.809D+10
36.00	.188D+00	-.213D+06	.119D+05	-.151D+03	.114D+05	.809D+10
48.00	.161D+00	-.784D+05	.999D+04	-.168D+03	.853D+04	.809D+10
60.00	.134D+00	.322D+05	.778D+04	-.200D+03	.754D+04	.809D+10
72.00	.106D+00	.114D+06	.543D+04	-.192D+03	.930D+04	.809D+10
84.00	.812D-01	.168D+06	.325D+04	-.171D+03	.105D+05	.809D+10
96.00	.590D-01	.197D+06	.138D+04	-.142D+03	.111D+05	.809D+10
108.00	.402D-01	.205D+06	-.119D+03	-.109D+03	.113D+05	.809D+10
120.00	.252D-01	.197D+06	-.122D+04	-.755D+02	.111D+05	.809D+10
132.00	.136D-01	.178D+06	-.195D+04	-.449D+02	.107D+05	.809D+10
144.00	.522D-02	.153D+06	-.233D+04	-.188D+02	.101D+05	.809D+10
156.00	-.461D-03	.124D+06	-.243D+04	.180D+01	.951D+04	.809D+10
168.00	-.394D-02	.951D+05	-.232D+04	.165D+02	.889D+04	.809D+10
180.00	-.572D-02	.686D+05	-.207D+04	.257D+02	.832D+04	.809D+10
192.00	-.628D-02	.457D+05	-.173D+04	.301D+02	.783D+04	.809D+10
204.00	-.603D-02	.271D+05	-.137D+04	.307D+02	.743D+04	.809D+10
216.00	-.529D-02	.128D+05	-.101D+04	.286D+02	.713D+04	.809D+10
228.00	-.433D-02	.266D+04	-.691D+03	.247D+02	.691D+04	.809D+10
240.00	-.332D-02	-.395D+04	-.423D+03	.199D+02	.693D+04	.809D+10
252.00	-.238D-02	-.769D+04	-.213D+03	.150D+02	.701D+04	.809D+10

264.00	-.158D-02	-.925D+04	-.607D+02	.104D+02	.705D+04	.809D+10
276.00	-.943D-03	-.929D+04	.410D+02	.651D+01	.705D+04	.809D+10
288.00	-.470D-03	-.838D+04	.100D+03	.339D+01	.703D+04	.809D+10
300.00	-.147D-03	-.696D+04	.127D+03	.110D+01	.700D+04	.809D+10
312.00	.524D-04	-.537D+04	.131D+03	-.409D+00	.696D+04	.809D+10
324.00	.156D-03	-.384D+04	.121D+03	-.127D+01	.693D+04	.809D+10
336.00	.192D-03	-.247D+04	.104D+03	-.161D+01	.690D+04	.809D+10
348.00	.183D-03	-.134D+04	.849D+02	-.160D+01	.688D+04	.809D+10
360.00	.151D-03	-.433D+03	.604D+02	-.249D+01	.686D+04	.809D+10
372.00	.111D-03	.117D+03	.340D+02	-.191D+01	.685D+04	.809D+10
384.00	.733D-04	.391D+03	.147D+02	-.131D+01	.686D+04	.809D+10
396.00	.424D-04	.476D+03	.206D+01	-.789D+00	.686D+04	.809D+10
408.00	.199D-04	.446D+03	-.498D+01	-.385D+00	.686D+04	.809D+10
420.00	.538D-05	.360D+03	-.794D+01	-.108D+00	.686D+04	.809D+10
432.00	-.274D-05	.258D+03	-.824D+01	.570D-01	.685D+04	.809D+10
444.00	-.629D-05	.163D+03	-.709D+01	.135D+00	.685D+04	.809D+10
456.00	-.692D-05	.880D+02	-.536D+01	.154D+00	.685D+04	.809D+10
468.00	-.599D-05	.347D+02	-.361D+01	.137D+00	.685D+04	.809D+10
480.00	-.444D-05	.109D+01	-.209D+01	.116D+00	.685D+04	.809D+10
492.00	-.288D-05	-.157D+02	-.918D+00	.784D-01	.685D+04	.809D+10
504.00	-.159D-05	-.212D+02	-.178D+00	.450D-01	.685D+04	.809D+10
516.00	-.680D-06	-.202D+02	.259D+00	.278D-01	.685D+04	.809D+10
528.00	-.131D-06	-.152D+02	.459D+00	.557D-02	.685D+04	.809D+10
540.00	.149D-06	-.928D+01	.453D+00	-.661D-02	.685D+04	.809D+10
552.00	.263D-06	-.434D+01	.340D+00	-.122D-01	.685D+04	.809D+10
564.00	.300D-06	-.113D+01	.181D+00	-.144D-01	.685D+04	.809D+10
576.00	.316D-06	.000D+00	.000D+00	-.158D-01	.685D+04	.809D+10

OUTPUT VERIFICATION

THE MAXIMUM MOMENT IMBALANCE FOR ANY ELEMENT = -.296D-08 IN-LBS
THE MAX. LATERAL FORCE IMBALANCE FOR ANY ELEMENT = .249D-09 LBS

OUTPUT SUMMARY

PILE-HEAD DEFLECTION = .233D+00 IN
MAXIMUM BENDING MOMENT = -.722D+06 LBS-IN
MAXIMUM SHEAR FORCE = .150D+05 LBS
NO. OF ITERATIONS = 10
NO. OF ZERO DEFLECTION POINTS = 4

LOADING NUMBER 5

BOUNDARY CONDITION CODE = 2
LATERAL LOAD AT THE PILE HEAD = .180D+05 LBS
SLOPE AT THE PILE HEAD = .000D+00 IN/IN
AXIAL LOAD AT THE PILE HEAD = .100D+06 LBS

X IN	DEFLECTION IN	MOMENT LBS-IN	SHEAR LBS	SOIL REACTION LBS/IN	TOTAL STRESS LBS/IN**2	FLEXURAL RIGIDITY LBS-IN**2
*****	**********	**********	**********	**********	**********	**********
.00	.293D+00	-.888D+06	.180D+05	.000D+00	.259D+05	.809D+10
12.00	.285D+00	-.671D+06	.176D+05	-.686D+02	.213D+05	.809D+10
24.00	.265D+00	-.463D+06	.164D+05	-.130D+03	.168D+05	.809D+10
36.00	.237D+00	-.273D+06	.146D+05	-.166D+03	.127D+05	.809D+10

48.00	.204D+00	-.106D+06	.125D+05	-.191D+03	.914D+04	.809D+10
60.00	.169D+00	.331D+05	.989D+04	-.239D+03	.756D+04	.809D+10
72.00	.135D+00	.138D+06	.700D+04	-.243D+03	.982D+04	.809D+10
84.00	.103D+00	.208D+06	.424D+04	-.217D+03	.113D+05	.809D+10
96.00	.753D-01	.246D+06	.185D+04	-.181D+03	.121D+05	.809D+10
108.00	.515D-01	.257D+06	-.636D+02	-.139D+03	.124D+05	.809D+10
120.00	.324D-01	.249D+06	-.148D+04	-.971D+02	.122D+05	.809D+10
132.00	.177D-01	.225D+06	-.241D+04	-.583D+02	.117D+05	.809D+10
144.00	.695D-02	.193D+06	-.291D+04	-.250D+02	.110D+05	.809D+10
156.00	-.319D-03	.157D+06	-.306D+04	.124D+01	.102D+05	.809D+10
168.00	-.479D-02	.121D+06	-.293D+04	.201D+02	.945D+04	.809D+10
180.00	-.711D-02	.876D+05	-.262D+04	.320D+02	.873D+04	.809D+10
192.00	-.787D-02	.586D+05	-.220D+04	.378D+02	.811D+04	.809D+10
204.00	-.759D-02	.349D+05	-.174D+04	.387D+02	.760D+04	.809D+10
216.00	-.669D-02	.168D+05	-.129D+04	.361D+02	.721D+04	.809D+10
228.00	-.549D-02	.378D+04	-.884D+03	.313D+02	.693D+04	.809D+10
240.00	-.422D-02	-.470D+04	-.544D+03	.253D+02	.695D+04	.809D+10
252.00	-.304D-02	-.952D+04	-.278D+03	.191D+02	.705D+04	.809D+10
264.00	-.202D-02	-.116D+05	-.827D+02	.133D+02	.710D+04	.809D+10
276.00	-.121D-02	-.117D+05	.474D+02	.836D+01	.710D+04	.809D+10
288.00	-.610D-03	-.106D+05	.124D+03	.439D+01	.708D+04	.809D+10
300.00	-.198D-03	-.882D+04	.159D+03	.148D+01	.704D+04	.809D+10
312.00	.581D-04	-.683D+04	.165D+03	-.453D+00	.700D+04	.809D+10
324.00	.192D-03	-.489D+04	.153D+03	-.156D+01	.695D+04	.809D+10
336.00	.240D-03	-.316D+04	.132D+03	-.201D+01	.692D+04	.809D+10
348.00	.231D-03	-.173D+04	.108D+03	-.201D+01	.689D+04	.809D+10
360.00	.191D-03	-.573D+03	.769D+02	-.314D+01	.686D+04	.809D+10
372.00	.141D-03	.129D+03	.436D+02	-.242D+01	.685D+04	.809D+10
384.00	.932D-04	.483D+03	.190D+02	-.167D+01	.686D+04	.809D+10
396.00	.542D-04	.595D+03	.299D+01	-.101D+01	.686D+04	.809D+10
408.00	.257D-04	.561D+03	-.604D+01	-.496D+00	.686D+04	.809D+10
420.00	.719D-05	.455D+03	-.988D+01	-.144D+00	.686D+04	.809D+10
432.00	-.321D-05	.327D+03	-.103D+02	.667D-01	.686D+04	.809D+10
444.00	-.779D-05	.208D+03	-.894D+01	.167D+00	.685D+04	.809D+10
456.00	-.867D-05	.113D+03	-.678D+01	.193D+00	.685D+04	.809D+10
468.00	-.755D-05	.451D+02	-.459D+01	.173D+00	.685D+04	.809D+10
480.00	-.562D-05	.229D+01	-.267D+01	.147D+00	.685D+04	.809D+10
492.00	-.365D-05	-.193D+02	-.119D+01	.996D-01	.685D+04	.809D+10
504.00	-.203D-05	-.265D+02	-.244D+00	.575D-01	.685D+04	.809D+10
516.00	-.875D-06	-.255D+02	.315D+00	.358D-01	.685D+04	.809D+10
528.00	-.176D-06	-.192D+02	.574D+00	.751D-02	.685D+04	.809D+10
540.00	.182D-06	-.118D+02	.571D+00	-.807D-02	.685D+04	.809D+10
552.00	.330D-06	-.552D+01	.431D+00	-.152D-01	.685D+04	.809D+10
564.00	.380D-06	-.145D+01	.230D+00	-.182D-01	.685D+04	.809D+10
576.00	.404D-06	.000D+00	.000D+00	-.201D-01	.685D+04	.809D+10

OUTPUT VERIFICATION

THE MAXIMUM MOMENT IMBALANCE FOR ANY ELEMENT = -.836D-08 IN-LBS
THE MAX. LATERAL FORCE IMBALANCE FOR ANY ELEMENT = .616D-09 LBS

OUTPUT SUMMARY

PILE-HEAD DEFLECTION	=	.293D+00 IN
MAXIMUM BENDING MOMENT	=	-.888D+06 LBS-IN
MAXIMUM SHEAR FORCE	=	.180D+05 LBS
NO. OF ITERATIONS	=	10
NO. OF ZERO DEFLECTION POINTS	=	4

APPENDIX 4
ANCILLARY PIPING SYSTEM

APPENDIX 4 ANCILLARY PIPING SYSTEM

PIPING STANDARDS & SPECIFICATIONS

FMC's Engineering Standard, February 22, 1990
- ES-2-1-0 For Cold Phossy Water
- ES-2-2-0 For Hot Phossy Water
- ES-2-31-0 For Furnace Precipitator Slurry
- ES-2-4-0 For Fresh Water

PP-2003 – Thermal Insullation, Rev 0

PIPING DRAWINGS

395129 Piping Plan V-3400 Wastewater sump Discharge No. 3 Furnace, Rev 4
395134 Piping Sections & Details Wastewater sump Discharge No. 3 Furnace, Rev 5
300789 Piping Plan V-3403 & Wastewater Line No. 3 & 4 Furnaces, Rev 1

PIPING SUPPORTS

398277 Piping Misc. Standard Supports and Details, Rev3
398278 Piping Misc. Standard Supports and Details, Rev2

FMC Phosphorus Chemicals Division
Pocatello

Interoffice

To Pocatello Engineering Department Standards Distribution

Date February 22, 1990

cc

From Engineering Piping Standards Committee

Subject NEW PIPING MATERIAL STANDARDS

Attached are the new Engineering Piping Standards (ES-2-0.0 through 95).

Please remove the entire Piping section in your Engineering Standards book and insert these new standards.

The General Notes (ES-2-0.1) provide clarification to help understand the new material standards.

All of the plant piping material standards have been revised to comply with ASME/ANSI Code B31.3 "Chemical Plant and Petroleum Refinery Piping".

The new standards apply to all new construction and should be applied to repair work as appropriate.

Work will continue on defining the fabrication, inspection and testing upgrades. As a minimum see ES-2-0.2 through ES-2-0.4.

- Some of the main changes to the material specifications are:
  - o All 1-1/2" and smaller threaded carbon steel pipe will be Sch 80. We currently use only Sch 80 nipples.
  - o Cast iron body valves will be replaced by cast steel bodies in most cases.
- Stores items will be changed to be consistent with the standards.
- Since there are major changes in the standards, meetings are being planned to give an overview and answer questions about the new standards. This will take place by the end of the Second Quarter, 1990.

If you have any questions before the overview meetings, contact one of the Engineering Piping Standards committee members (PSGSchoen, RDPatton, DLHorak, ETSmith, RHMiller, or AJPotzman).

nm

FMC - POCATELLO ENGINEERING STANDARD

Number: ES-2-0.0-0
Original Issue Date: 2/90
Revision Date:
Page: 1 of 2
Approval: WSM/PSES

TITLE: PIPING STANDARDS INDEX

NUMBER	TITLE	CATEGORY
ES-2-0.0-0	Index	
ES-2-0.1-0	General Notes	
ES-2-0.2-0	Category D - Construction Specifications and Notes	
ES-2-0.3-0	General Requirements - Construction Specifications and Notes	
ES-2-0.4-0	Category M - Construction Specifications and Notes	
	WATER	
ES-2-1-0	Cold Phossy Water	GEN
ES-2-2-0	Hot Phossy Water from P_4 Sumps	GEN
ES-2-3-0	Hot Phossy Water	GEN
ES-2-4-0	Fresh Water	D
ES-2-4-0	Industrial Waste Water	D
ES-2-5-0	Potable Water	*
ES-2-7-0	Furnace Cooling Water, Brass Piping	D
ES-2-10-0	Furnace, Calciner & P_4 Dock Scrubber Slurry	GEN
ES-2-35-0	Safety Shower	D
ES-2-52-0	Boiler Feed Water	GEN
	LIQUID PHOSPHORUS, CENTRIFUGE PRODUCT, SLUDGE	
ES-2-20-0	Hot Water Jacketed	M
ES-2-22-0	Non-Jacketed	M
	SLURRY	
ES-2-31-0	Furnace Precipitator Slurry	GEN
ES-2-32-0	Slaked Lime Slurry	GEN
	GASES	
ES-2-4-0	Nitrogen	D
ES-2-4-0	Plant Air	D
ES-2-35-0	Instrument Air	D
ES-2-35-0	Breathing Air	D
ES-2-36-0	CO Gas	M
ES-2-39-0	Natural Gas, Medium Pressure	GEN/*
ES-2-40-0	Natural Gas, Low Pressure	GEN/*
ES-2-41-0	Oxygen	GEN
ES-2-42-0	Inert Gas	GEN
	STEAM	
ES-2-51-0	Steam	D
ES-2-52-0	Superheated Steam	GEN
ES-2-52-0	Boilerhouse Steam	GEN
	MISCELLANEOUS	
ES-2-56-0	Fuel Oil	GEN/*

* See specific standard for code.

TITLE: GENERAL NOTES - PIPING STANDARDS

These notes are written with the intention of giving the user some clarification as to the abbreviations, piping grades, and other information contained within the piping standards. Codes such as ANSI B31.1, ANSI B31.3, NFPA 54/ANSI Z223.1, and others have been used as a basis for development of these piping standards. Copies of these codes are available in the Engineering Department Library and should be consulted when the piping standards do not contain the desired information.

- Most of the piping standards are based on ASME/ANSI B31.3 Chemical Plant and Petroleum Refinery Piping. In this code three piping categories are presented according to hazard.

  Category D Fluid Service - Nonflammable, nontoxic, and not damaging to the human tissues
  - Does not exceed 150 psig
  - Design temperature is between -20 and +366 degrees F

  General Requirements - General fluid, exposure to small quantities will not result in serious irreversible harm

  Category M Fluid Service - Exposure to a small quantity can produce serious irreversible harm to persons on breathing or bodily contact

- Piping is normally specified by ASTM specifications. The following is a brief description of a few common carbon steel pipe specifications. They are listed in order of the "higher quality" pipe first. Generally pipe listed first may be substituted for pipe listed later.

  ASTM A106 Grade B - Seamless carbon steel pipe for high temperature service

  ASTM A53 Type S Grade B - Seamless steel pipe

  ASTM A53 Type E Grade B - Electric-resistance welded steel pipe

  ASTM A53 Type F - Furnace Butt-welded (continuous welded) steel pipe
  - Use only on Category D fluid service

  ASTM A120 - This specification was discontinued in 1988 and replaced by ASTM A53

- For testing piping systems, refer to ES-2-0.2 through ES-2-0.4 or the appropriate code. For ANSI B31.1 or ANSI B31.3, Chapter 6 "Inspection and Examination" includes information on testing.

- The following are abbreviations used throughout the Piping Standards:

ANSI - American National Standards Institute
API - American Petroleum Institute
ASME - The American Society of Mechanical Engineers
ASNT - American Society for Nondestructive Testing
ASTM - American Society for Testing and Materials
AWWA - American Water Works Association
AWS - American Welding Society
MSS - Manufacturers Standardization Society of the Valve and Fitting Industry, Inc.
NFPA - National Fire Protection Association
SAE - Society of Automotive Engineers

BW - Butt weld
CI - Cast iron
CS - Carbon steel
CWP - Cold water pressure
FF - Flat face (flange)
MI - Malleable iron
RF - Raised face (flange)
NPT - National pipe thread
Sch - Schedule
SS - Stainless steel
SW - Socket weld
WOG - Water, oil or gas
WSP - Working steam pressure

CONSTRUCTION SPECIFICATIONS

TITLE: ANSI/ASME B31.3 CATEGORY D FLUIDS
(Non flammable, non toxic, and not damaging to human tissue. 150 psig max. -20 degF to +366 degF)

COMPONENTS: Supplier shall certify that components comply with the designated grades or specifications.

FABRICATION: AND ERECTION Components used in fabrication shall be certified to comply with the designated grades of specifications.

TESTING: Leak testing is required per ANSI/ASME B31.3 Section 345.7. Responsibility for leak testing shall be specified by FMC. An initial service leak test may be performed by gradually increasing the service fluid pressure in steps, starting at 25 psi or less, until design pressure is reached. Hold the pressure at each step long enough to equalize strains and check for leaks.

FMC - POCATELLO ENGINEERING STANDARD

Number: ES-2-0.3-0
Original Issue Date: 2/90
Revision Date:
Page: 1 of 1
Approval: WSM/TSS

CONSTRUCTION SPECIFICATIONS

TITLE: ANSI/ASME B31.3 GENERAL REQUIREMENTS FLUIDS
(Exposure to small quantities will not result in serious irreversible harm)

COMPONENTS: Supplier shall certify to FMC that components comply with the designated grades or specifications.

FABRICATION: AND ERECTION Components and fabrication shall be certified to comply with the designated grades or specifications. Fabricator shall supply current records of the welding procedures, welder performance qualifications, and welder identification symbols.

TESTING: Leak testing is required per ANSI/ASME B31.3 Section 345. Responsibility for leak testing shall be specified by FMC.

A hydrostatic leak test may be performed by gradually increasing the water pressure in steps, starting at 25 psig or less, until 150% of the design pressure is reached. Hold the pressure at each step long enough to equalize strains and check for leaks. Piping shall be isolated from vessels and equipment prior to testing. See ANSI/ASME B31.3 Sec 345 for alternate testing techniques.

CONSTRUCTION SPECIFICATION

TITLE: ANSI/ASME B31.3 CATEGORY M FLUIDS
(Exposure to a small quantity can produce serious irreversible harm to persons upon breathing or bodily contact.)

COMPONENTS: Supplier shall certify to FMC that components comply with the designated grades or specifications.

FABRICATION: AND ERECTION Components, fabrication, erection, and examination shall be certified to comply with the designated grades or specifications as well as the requirements of ANSI/ASME B31.3, category M. Fabricator shall maintain and submit current records of the welding and examination procedures, welder and examiner performance qualifications, and welder identification symbols.

TESTING: Leak testing is required per ANSI/ASME B31.3 Section 345. Fabricator shall be responsible for leak testing of fabricated components or assemblies. Responsibility for leak testing of erected lines shall be specified by FMC.

A hydrostatic leak test may be performed by gradually increasing the water pressure in steps, starting at 25 psig or less, until 150% of the design pressure is reached. Hold the pressure at each step long enough to equalize strains and check for leaks. Piping shall be isolated from vessels and equipment prior to testing.

Note: Hydrostatic leak test does <u>not</u> apply to CO lines.

See ANSI/ASME B31.3 Sec 345 for alternate testing techniques.

FMC - POCATELLO ENGINEERING STANDARD

Number: ES-2-1-0
Original Issue Date: 2/90
Revision Date:
Page: 1 of 3
Approval: WSM/DSES

TITLE: COLD PHOSSY WATER

Service and Design:	Cold Phossy Water, Below 100°F and 150 psig. Above ground.
Applicable Codes & Standards:	ANSI B31.3 General Requirements.
Color Code:	Yellow
Construction:	1 1/2" or below - NPT 2" and up - Welded and flanged.
Piping:	1 1/2" or below ANSI B36.10, Sch. 80, ASTM A53 Type E or S, Grade B. 2" and up - ANSI B36.10, Sch. 40, ASTM A53 Type E or S, Grade B Beveled End.
Elbows, Tees. etc.:	1 1/2" or below - Malleable Iron Threaded, Class 300, ANSI B16.3 2" and up - Sch. 40, Buttweld, ANSI B16.9, ASTM A234 Grade WPB
Nipples:	1 1/2" or below - ANSI B36.10, Sch. 80, ASTM A106, Grade B NPT.
Bushings:	1 1/2" or below - 3000# Forged Steel, Hexagon, Screwed, ANSI B16.11, ASTM A105
Plugs:	1 1/2" or below - 3000# Forged Steel Square Head, Solid Plug, ANSI B16.11, ASTM A105
Couplings:	1 1/2" or below - Malleable Iron Threaded, Class 300, ANSI B16.3
Unions:	1 1/2" or below - Malleable Iron Threaded, Class 300, ANSI B16.39, Ground Joint, Bronze to Iron Seat
Thread Compound:	Rector Seal 100W Teflon paste pipe thread Compound
Flanges:	150# Raised Face, Forged Steel ASTM A105, ANSI B16.5. If slip on flanges are used, they must be welded on both sides. (NOTE: Use flat-face flanges when mating with a flat-faced flanged component.)
Flange Guards:	Not normally used.
Gaskets:	ANSI B16.21 Ring gaskets, 1/16" thick, Garlock Blueguard 3400 (Note: For flat-face flanges use full face gaskets.)

Bolting:	ASTM A307 Grade B Heavy Hex Head & Heavy Hex Nuts.
Gate Valves:	1 1/2" and below - 125# Bronze, Screwed, Rising Stem Solid Disc, Screwed Bonnet, Meeting MSS-SP80, Crane #428 - NO SUBSTITUTES! 2" and up - 150# Cast Steel, Flanged, OS&Y 4 bolt Bonnet, Flexible Wedge Disc, Crane #47XU meeting API 600
Check Valves:	1 1/2" and below - 200# Strataflo Model 400 Bronze Body with stainless steel Poppet, Screwed. 2" and up - 150# Cast Steel, Flanged, Swing Check, Crane #147X. ANSI B16.34
Globe Valves:	Not normally used.
Butterfly Valves:	* 3" and over - high performance, double offset stem and disc, wafer style, Class 150, Carbon Steel Body and 316 Stainless Steel Disc, XOMOX Figure 801-B-6-ST1 meeting ANSI B16.34, API 609
Ball Valves:	* 1 1/2" and below-150psi WSP Bronze unibody construction, NPT, 316SS Ball and stem, Durafill seats, low Profile Oval handle. Watts #B6100-SS-02-OL 2" and up - 150# Ductile Iron Body, Flanged, Reinforced TFE seats, SS Trim, McCanna #S 151-DI-R-S6, meeting MSS-SP72
Plug Valves:	2" and up - 150# Flanged, Ductile Iron Body, 316SS Trim, Teflon sleeve and diaphragm, meeting API 593 and ANSI B16.10; Tufline Fig. 067
Other Valves:	Not normally used.
Branch Connections:	Use Tee, Lateral, Cross or 3000# ASTM A105 Forged Steel Integrally Reinforced Branch Connection Fitting (Weld-o-let, thread-o-let, etc.). If branch size is $\leq$ 2" and $\leq$ 1/4 the line size, then a 3000# ASTM A105 Forged steel coupling may be used. Other branch connections must comply with ANSI B31.3 Section 304.3.
Tubing:	Not normally used.
Welding:	Per approved welding procedure. For FMC Maintenance use WPS ASME 111 in accordance with PQT 4111 for 2 1/2" and over with PQT 3111 for 3/4" thru 2".

* Preferred type of valve for this service.

TITLE: COLD PHOSSY WATER

Construction Specifications: See ES-2-0.3

Notes: See ES-2-0.3

FMC - POCATELLO ENGINEERING STANDARD

Number: ES-2-2-0
Original Issue Date: 2/90
Revision Date:
Page: 1 of 3
Approval: WSM/RGS

TITLE: HOT PHOSSY WATER FROM FURNACE P_4 SUMPS

Service and Design:	Hot Phossy water originating from the furnace P_4 sumps, above 100°F, below 150 psi (corrosive condition)
Applicable codes & Standards:	ANSI B31.3 General Requirements
Color Code:	Yellow
Construction:	1 1/2" or below - Socketweld (preferred) or NPT 2" and up - Buttwelded and Flanged or Socketweld for 2"
Piping:	2" or below - ANSI B36.19, Sch 40S, ASTM A312 grade TP316L welded pipe * Over 2" - ANSI B36.19, Sch 10S, ASTM A312 grade TP316L welded pipe with beveled ends.
Elbows Tees Etc.:	2" or below - Socketwelded 3000# Forged 316L stainless steel, ASTM A182-F316L, ANSI B16.11 1 1/2" or below - Threaded - 3000# Forged 316L Stainless steel, ASTM A182-F316L, ANSI B16.11 * 2" and up- Buttweld - Schedule to match adjoining pipe, 316L Stainless steel, ANSI B16.9, ASTM A403-WP316L
Nipples:	1 1/2" or below - ANSI B36.19, Sch 80S, ASTM A312-TP316, NPT.
Bushings:	1 1/2" or below - 3000# Forged 316 Stainless steel, hexagon, threaded ANSI B16.11, ASTM A182-F316
Plugs:	1 1/2" or below - 3000# Forged 316 Stainless steel, square head, solid plug, ANSI B16.11, ASTM A182-F316
Couplings:	1 1/2" or below - 3000# Forged 316 Stainless Steel, NPT ANSI B16.11, ASTM A182-F316
Unions:	1 1/2" or below - 3000# Forged 316 SS ANSI B16.11 NPT, ASTM A182-F316 2" or below - 3000# Forged 316L SS ANSI B16.11 socket welded ASTM A182-F316L
Thread Compound:	Rector Seal 100W Teflon paste pipe thread compound.
Flanges:	2" and above - Lap joint stub end MSS SP43 type A - 316L Stainless steel conforming to ASTM A403 WP316L Schedule to match adjoining pipe. Use with 150# Lap joint backing flange ASTM A105 ANSI B16.5. Other 150# raised face ASTM A182-F316L flanges may also be used.

* PRV Drains use Schedule 40S

Flange Guards:	Ramco teflon "Spra-Gard" to match flange sizes.
Gaskets:	Lamons style WR, chlorocarb spiral wound gasket with 316L winding and Carbon Steel centering ring. Meeting API 601.
Bolting:	ASTM A307 Grade B heavy Hex heads and heavy hex nuts
Gate Valves:	Not preferred.
Check Valves:	Do Not Use
Globe Valves:	Do Not Use
Butterfly Valves:	3" and above - High performance, Double offset stem and Disc, wafer style, Class 150, 316 stainless steel body and Disc, API 607 Fire Safe, Xomox Figure 801-6-6-FTI, Meeting ANSI B16.34, API 609
Ball Valves:	1 1/2" or below-threaded, 150 PSI WSP min., NPT unibody construction 316 stainless steel body and trim, API 607 fire safe, low profile oval handle, Durafill seats, Watts #S8100-M1-02-0L 2" and above - 150# Flanged, 316 Stainless steel body and trim, reinforced TFE seats, McCanna #S-151-S6-R-S6
Plug Valves:	2" and above - 150# Flanged, 316SS Body and trim, Teflon sleeve and diaphragm meeting API 599 and ANSI B16.10, Tufline fig. 067
Other Valves:	150#, 316 SS body and trim
Branch Connections:	Use Tee, Lateral, Cross or 3000# Forged ASTM A182-F316 (F316L for welded) Stainless steel Integrally reinforced branch connection fitting (weld-o-let, thread-o-let, etc.) If branch size is $\leq$ 2" and $\leq$ 1/4 the line size, then a 3000# ASTM A182-F316L Forged stainless steel coupling may be used Other branch connections must comply with ANSI B31.3 section 304.3
Tubing:	Not normally used.
Welding:	Per approved welding procedure.

Construction
Specifications: See ES-2-0.3

Notes: See ES-2-0.3

FMC - POCATELLO ENGINEERING STANDARD

Number: ES-2-4-0
Original Issue Date: 2/90
Revision Date:
Page: 1 of 3
Approval: WSM/FSS

TITLE: PLANT AIR, FRESH WATER, INDUSTRIAL WASTE WATER, NITROGEN

Service and Design:	Plant Air, fresh water, Industrial waste water and Nitrogen (see Note 1) Above -20°F, below 200°F and below 150 psig. Above ground.
Applicable codes & Standards:	ANSI B31.3 Category D.
Color Code:	Green.
Construction:	2" or below - NPT. 2" and up - Welded and flanged.
Piping:	2" or below - ANSI B36.10, Sch 80, ASTM A53 Type F threaded. 2" and up - ANSI B36.10, Sch 40, ASTM A53 Type E or S, Grade B beveled end.
Elbows Tees Etc.:	2" or below - Malleable iron threaded, class 150, ANSI B16.3 2" and up - Sch 40, Buttweld, ANSI B16.9, ASTM A234 Grade WPB.
Nipples:	2" or below - ANSI B36.10, Sch 80, ASTM A106, Grade B NPT.
Bushings:	2" or below - 3000# Forged steel hexagon screwed, ANSI B16.11, ASTM A105.
Plugs:	2" or below - 3000# Forged steel square head, solid plug, ANSI B16.11, ASTM A105.
Couplings:	2" or below-Malleable Iron threaded Class 150 ANSI B16.3.
Unions:	2" or below - Malleable iron threaded class 250 or 300 ANSI B16.39, Ground joint bronze to iron seat
Thread Compound:	Rector Seal 100W Teflon paste pipe thread compound.
Flanges:	150# raised face, forged steel ASTM A105, ANSI B16.5. If slip on flanges are used, they must be welded on both sides. (NOTE: Use flat-face flanges when mating with a flat-face flanged component.)
Flange Gaurds:	Not required.
Gaskets:	ANSI B16.21 Ring gaskets, 1/16" thick, Garlock Blueguard 3400(Note: For flat face flanges use full face gaskets.)

Bolting:	ASTM A307 Grade B Heavy Hex Head & Heavy Hex Nuts.
Gate Valves:	2" and below - 125# Bronze, Screwed, Rising Stem Solid Disc, Screwed Bonnet, Meeting MSS-SP80 Crane #428 - NO SUBSTITUTES! 2" and up - 150# Cast Steel, Flanged, OS&Y 4 Bolt bonnet, Flexible Wedge Disc, Crane #47XU meeting API 600
Check Valves:	2" and below - 200# Strataflo Model 400 Bronze Body with stainless steel Poppet, Screwed Check Valve. 2" and up - 150# Cast Steel, Flanged, Swing Check, Crane #147X, ANSI B16.34
Globe Valves:	2" and below - 150# Bronze, screwed, meeting MSS - SP80 Crane #14 1/2P. 2" and up - 150# steel, flanged, OS&Y, Crane #143XN, Meeting ANSI B16.34
Butterfly Valves: *	3" and over - high performance, double offset stem and disc, wafer style, Class 150, Carbon Steel Body and 316 Stainless Steel Disc, XOMOX Figure 801-B-6-ST1 meeting ANSI B16.34, API 609
Ball Valves: *	2" and below-150psi WSP, Bronze unibody construction, NPT, 316SS ball and stem, Durafill seats, low Profile Oval handle, Watts - B6100-SS-02-OL 2" and up - 150# Ductile Iron Body, Flanged, Reinforced TFE seats, SS Trim, McCanna S 151-DI-R-S6, meeting MSS-SP72
Plug Valves:	2" and up - 150# Flanged, Ductile Iron Body, 316SS Trim Teflon sleeve and diaphragm, meeting API 593 and ANSI B16.10; Tufline Fig. 067
Other Valves:	I25 PSI WSP
Branch Connections:	Use Tee, Lateral, Cross or 3000# ASTM A105 Forged Steel Integrally Reinforced Branch Connection Fitting (Weld-o-let, thread-o-let, etc.). If branch size is $\leq$ 2" and $\leq$ 1/4 the line size, then a 3000# ASTM A105 Forged steel coupling may be used. Other branch connections must comply with ANSI B31.3 Section 304.3.
Tubing:	1/2" or below-seamless soft Annealed Copper Refrigeration Tubing meeting ASTM B280.
Tubing Fittings:	Brass compression fittings meeting SAE J512.
Welding:	Per approved welding procedure For FMC Maintenance use WPS ASME 111 in accordance with PQT 4111 for 2 1/2" and over and PQT 3111 for 3/4" thru 2"

* Preferred type of valve for this service.

Construction Specifications: See ES-2-0.2

Notes:

1) This standard includes Nitrogen on the warm side of an evaporator only.

2) See ES-2-0.2 for construction and testing notes.

FMC - POCATELLO ENGINEERING STANDARD

Number: ES-2-31-0
Original Issue Date: 2/90
Revision Date:
Page: 1 of 3
Approval: WSM/FSS

TITLE: FURNACE PRECIPITATOR SLURRY

Service and Design:	Furnace Precipitator Slurry - Below 100 psig, Below 328°F.
Applicable Codes & Standards:	ANSI B31.3 General requirements.
Color Code:	Yellow
Construction:	1 1/2" and below - NPT 2" and up - Welded and Flanged
Piping:	All sizes: ANSI B36.10, Sch 80, ASTM A53 Type S, Grade B.
Elbows, Tees. etc.:	1 1/2" and below - 3000# Forged Steel, ASTM A105 GR2, NPT, ANSI B16.11. 2" and up - Buttweld, Sch. 80, ANSI B16.9 ASTM A234 Grade WPB. NOTE: Use Long Radius Elbows whenever possible.
Nipples:	1 1/2" and below - ANSI B36.10, Sch. 80, ASTM A106, Grade WPB.
Bushings:	1 1/2" and below - 3000# Forged Steel, Screwed, Soild Plug, ANSI B16.11, ASTM A105.
Plugs:	1 1/2" and below - 3000# Forged Steel, square head, Soild Plug, ANSI B16.11, ASTM A105.
Couplings:	1 1/2" and below - 3000# Forged Steel, ASTM A105 Grade 2, ANSI B16.11.
Unions:	1 1/2" and below - 3000# Forged Steel,ASTM A105 Grade 2, MSS SP-83.
Thread Compound:	Rector Seal 100W Teflon paste pipe thread compound.
Flanges:	150# Raised Face, Forged Steel, ASTM A105, ANSI B16.5. If slip on flanges are used, they must be welded on both sides. (NOTE: Use Flat face flanges when mating with a flat face flanged component.)
Flange Guards:	Ramco Teflon "Spra-Gard" to match flange size.

Gaskets:	Lamons Style WR Chlorocarb Spiral Wound Gasket, with 316 winding and Carbon Steel Centering Ring, API 601.
Bolting:	ASTM A307, Grade B, Heavy Hex Head with Heavy Hex Nuts.
Gate Valves:	2" and up - #150 Cast Steel, Flanged, OS & Y, Flexible Wedge Disc, 4-Bolt Bonnet, API 600, Crane #47XU. 2" to 8" - 150 PSI CWP Knife Gate Valve, 316 S.S. Body, Seats, Gate and Flanges, Molded Elastomer Packing, ITT Fabri-Valve #37R.
Check Valves:	Do Not Use.
Globe Valves:	Do Not Use.
Butterfly Valves:	Do Not Use.
Ball Valves:	1 1/2" or below - 150# WSP min, NPT, Bronze, Unibody Construction, 316 stainless steel Ball and Stem, Durafill seats, Low Profile Oval Handle, Watts B6100-SS-02-OL. 2" and up - Not Normally Used.
Plug Valves:	Not Normaly Used.
Other Valves:	150# Carbon Steel, API 607 Fire Safe.
Branch Connections:	Use Tee, Lateral, Cross or 3000# Forged ASTM A105 Forged Steel Integrally Reinforced Branch Connection Fitting (Weld-o-let, thread-o-let, etc.) If branch size is ≤ 2" and ≤ 1/4 line size, then 3000# ASTM A105 Forged steel coupling may be used. Other Branch connections must comply with ANSI B31.3 Section 304.3. (NOTE: Branch connections should point up. Use minimum distance possible between header and branch valve.)
Tubing:	Not normally used.
Welding:	Per approved welding procedure. For FMC Maintenance use WPS ASME 111 in accordance with PQT 4111 for NPS 2 1/2" and over and PQT 3111 for NPS 3/4" thru 2".

Construction
Specifications: See ES-2-0.3

Notes: See ES-2-0.3

Raytheon Engineers & Constructors

Project Number 96096.043
Specification No. PP-2003
Facility Pocatello Phosphorus Plant
Location Pocatello, Idaho

FMC CORPORATION
FMC WESTERN ALLIANCE

SPECIFICATION

FOR

THERMAL INSULATION

RAYTHEON ENGINEERS & CONSTRUCTORS

DENVER, COLORADO

Status: Approved for Construction Rev. 0 Date: 04/08/98

		Rev. Approval	
J.L. Smith Originator	10/21/94 Date		Date
Brian Hosier Checker	10/21/94 Date	0	4-9-98 Date
Brian Hosier Supervising Discipline Engineer	3/13/98 Date	0	4-9-98 Date
D.E. Winkler Project Engineering Manager	3/17/98 Date	0	4/9/98 Date
J. R. Weir Project Quality Engineer	3/18/98 Date	0	4-9-98 Date
Arlen Potzman Client Approval	3/31/98 Date		Date

Raytheon Engineers & Constructors

SPECIFICATION REVISION PAGE

Client:	FMC Corporation	Project Number:	96096.043
Facility:	Phosphorus Chemicals Division	Specification No.:	PP-2003
Location:	Pocatello, Idaho	Discipline:	Piping

SPECIFICATION

FOR

THERMAL INSULATION

This page is a record of all revisions of the specification. Each time the specification is revised, only the new or revised pages are issued. The description of each revision is briefly noted below.

Status	Rev. No.	Date	Revised By	Pages	Description
For Client Approval	A	12/9/97		All	Transfer from NOSAP Project.
AFC	0	04/08/98		All	Approved for Construction

Distribution:

TABLE OF CONTENTS

SECTION — Page

1. SCOPE 1

2. GENERAL 1

3. MATERIALS 2
- A. Insulation 2
- B. Jacketing 3
- C. Sealants, Adhesives, and Cements 3

4. INSULATION THICKNESS. 3

5. INSTALLATION 3
- A. Cellular Glass Insulation and Calcium Silicate 3
- B. Fiberglass Insulation 4
- C. Mineral Wool 5
- D. Mild Steel and Stainless Steel Jacketing 5

6. PERSONNEL PROTECTION 6

7. SPECIFICATION SUMMARY 6

1. SCOPE

This specification shall govern the design, physical properties of materials and methods of application for thermal insulation to be applied to vessels, piping and equipment operating between 150°F to 500°F.

The Design Engineer has the responsibility to interpret the specifications and, should changes in design or conflicts occur, shall make necessary revisions or additions to the specifications.

2. GENERAL

A. Where the following terms are found within this specification, they shall have meaning and significance as defined:

Client:	FMC Corporation
Engineer:	Raytheon Engineers & Constructors (RE&C)
Contractor:	Rust Constructors, Inc.
Subcontractor:	Insulation Applicator

B. Engineering and Test Standards

1. The edition in effect on May 17, 1996 of codes, standards, or specifications including any published modification, interpretations, or additions cited in this specification shall be considered an integral part of this specification.

2. The entire job shall be executed in accordance with these specifications and with the best modern practice for this class of work and it is to present a neat and workmanlike appearance.

C. The subcontractor shall provide all materials, equipment, tools, labor and supervision necessary to execute the work, and shall remove all equipment and excess material after completion.

D. Insulation application shall not be started until after all required hydrostatic or pneumatic tests have been completed, unless otherwise approved. If insulation must begin prior to such testing, then all welds, flange joints and plugged vents and drains in the pipe shall be left uncovered until all tests are complete. Vessel welds may be insulated if the vessel has been hydrostatically shop tested.

E. Do not insulate indoor valves and flanges. Manways, handholds, and blind flanged nozzles on outdoor equipment shall be insulated the same thickness as specified for the equipment. Insulation should be applied in such a manner as to be weathertight and be removable and replaceable without damage, for access with a minimal amount of effort. Davits shall be free to operate. Inside valves, flanges, bucket, thermostatic and thermodynamic steam traps shall not be insulated.

1. As specified, valves, except control and relief valves, shall be insulated to full specified thickness except the bonnet. Control valve bodies only shall be insulated to full specified thickness. Relief valves shall not be insulated, unless required for freeze protection. Bonnet shall be removable without damage to the insulation.

2. Pumps located inside of buildings are not to be insulated. Outside pumps requiring insulation should have insulation boxes that can be easily removed and replaced without being destroyed.

3. Heat tracing where required, must be installed before insulation is started.

F. Surface Preparation

All surfaces which are to be insulated shall be free of all contaminants, oil grease, dirt, etc. and will be prepared in accordance with the insulation materials manufacturers requirements.

G. Conditions of Applications

1. Insulation and accessory materials, other than cements and mastics, shall be applied only if dry. Insulation that has become wet or damaged shall be replaced.

2. Cracks, voids, breaks, and improperly fitted insulation shall be refitted or replaced. Filling of joints, cracks, voids or holes with mastics or cements shall not be allowed except where pipe hangers or supports penetrate insulation and jacketing.

3. Insulation that has been applied, but not finished with weather barrier jackets or coating, shall be protected from the weather or other sources of physical damage.

4. Structures, equipment, piping, and other surfaces in the vicinity of insulation applications in progress shall be protected from dripping, splashing, or accidental applications of coatings, mastics, or cements.

3. MATERIALS

A. Insulation.

1. Cellular Glass Insulation, Pittsburg-Corning "Foamglas'.(K = .33 BTU-IN/HR-FT^2-°F at 75°F)

2. Hydrous Calcium Silicate ("Cal-Sil"), from various manufacturers. Material shall be asbestos free and corrosion inhibited. (K = .475 BTU-IN/HR-FT^2-°F at 350°F)

3. Mineral Wool, from various manufacturers. Material shall be asbestos free. (K = .35 BTU-IN/HR-FT^2-°F at 100°F)

4. Fiberglass insulation, shall be one-piece, heavy density, pre-formed in accordance with ASTM C547, suitable for 450°F. (K=.23 BTU-IN/HR-FT^2-°F at 75°F)

B. Jacketing

1. All piping which is insulated under this specification shall be finish covered with .019 smooth aluminum jacket with a suitable vapor barrier. The sub-contractor shall also cover all insulated elbows with aluminum jackets, .019" thick, preformed.

C. Sealants, Adhesives, and Cements.

1. Silicone Sealant, General Electric, #1200 Silicone Construction Sealant.

2. Insulation Cement, Pabco insulating mud, or approved equal.

4. INSULATION THICKNESS.

The pipe insulation thickness shall be determined by reference to operating temperatures and to the Insulation Thickness Chart as follows:

	OPERATING TEMPERATURE		
PIPE SIZE	300°F(149°C) AND BELOW	300°F (149°C) TO 500°F (260°C)	ABOVE 500°F (260°C)
1" & Smaller	1-1/2"	1-1/2"	1-1/2"
1-1/2" - 10"	1-1/2"	2"	2"
12" - 36"	2"	3"	Mineral Wool or As Specified
Over 36"	3"	4"	

5. INSTALLATION

A. Cellular Glass Insulation and Calcium Silicate.

1. Piping - pipe insulation shall be applied with staggered joints tightly butted. Stainless steel bands 1/2" wide shall be placed on 9" centers for 18" insulation or 12" centers for 24" insulation. Wire shall not be used for temporarily securing cellular glass. If final jacketing is to be metal, glass reinforced tape, spaced at 9" intervals, may be used.

2. Hangers - hangers shall be covered as shown in Figure 5.

3. Fittings - fittings shall be covered with metal per Section 4.0. There shall be no gaps between pipe insulation and fitting insulation. Jackets for elbows will be pre-formed metal up to 4" pipe size.

4. Flanges and Nozzles - flange and nozzle insulation, if required, shall be removable pad. (See Figure 3)

5. Valves - valves, if insulated, shall be a removable pad. (See Figure 4)

6. Expansion - expansion joints shall be constructed as shown in Figure 1, 6, and 7.

7. Equipment - vertical vessels shall have angle or plate supports welded around the shell at top and bottom as shown in Figure 6. Intermediate supports will be used on vessels over 15' high and placed on 12' centers.

   Vessels over 15 feet in diameter shall have vertical pencil rods welded to the shell on 50 feet maximum centers. Pencil rods shall be spaced away from vessels by means of angle clips, studs, or nuts to facilitate banding of insulation as shown in Figure 7 When welding to alloy vessels, a recommendation or approval is to be obtained from FMC to determine the welding rod and procedure to be used.

   Foamglas shall be flat block, curved sidewall segments, or beveled lags fabricated to fit the diameter of the vessel. Joints shall be staggered and tightly fitted. Panels shall be held in place with banding; wire shall not be used.

B. Fiberglass Insulation

1. Pipe insujlation shall be preformed and furnished in standard lengths and thicknesses with ends cut square, conforming with dimensional requirements of ASTM C581.

2. All insulating products and covering to be UL Listed, with UL compliance clearly marked on cartons.

3. All shall comply with all applicable federal, state and local codes and laws.

4. Thickness of insulation shall be as follows:
   NPS 1/2 - 2 = 1"
   NPS 3 - 12 = 1 1/2"

5. Jackets:

   a. PVC plastic, one piece molded type fittings covers and jacketing material. Connections: Tacks, pressure sensitive color matching vinyl tape. To be used for indoor applications.
   b. Aluminum jacket: 0.016 thick sheet, smooth finish, with longitudinal slip joint and 2" laps' fitting covers. To be used for outdoor application.
   c. Stainless steel type 304, 0-10"; smooth finish to be used for corrosive environments.

6. All installation shall be continuous through wall and ceiling opening and sleeves.

7. Hangers, supports, anchors, etc, that are secured directly to cold surfaces must be adequately insulated and vapor sealed to prevent condensation.

8. On dual temperature systems seal all pipe termination including fittings, wall penetrations, and pipe supports with vapor barrier mastic.

9. All surface finishes are to be extended to protect all surfaces, ends and raw edges of insulation.

10. Specified adhesive, mastic and coating shall be applied at the manufacturer's recommended coverage per gallon.

C. Mineral Wool

1. Uses - Mineral wool is to be used on larger vessels of high temperature, on the bottoms of suspended tanks, on flat surfaces, or in other applications specified by FMC.

2. Installation - Mineral wool blankets will be placed over pins that are spot welded to the vessel, and retained by stamped metal plates that slide over the pins. Pins to be placed on a maximum of 12" centers.

D. Mild Steel and Stainless Steel Jacketing

Jacketing shall be cut to length to provide a one inch overlap and secured with sheet metal screws every nine inches. Rivets or other non-removable fasteners shall not be used. All end joints on horizontal pipes and all longitudinal joints on vertical pipes shall be sealed using the sealer specified in Section 3C. All horizontal seals shall be on the side of the pipe and the upper jacketing shall overlap the lower so as to exclude water from the steam.

6. PERSONNEL PROTECTION

A. For the protection of personnel, all surfaces with temperature in excess of 150°F located beside walkways or other surfaces or which could be touched in the course of normal operating duties shall be insulated or guarded. All exposed hot surfaces within seven (7) feet of the floor or walking platform or within 30 inches measured horizontally from stairways, ramps or fixed ladders shall be covered with an insulation material, or guarded in such a manner as to prevent contact. Guards may be constructed or enamel coated carbon steel expanded metal mesh as shown on Standard Engineering Drawings.

All piping insulated for personnel protection shall be insulated with a 1" (min) thick calcium silicate insulation and covered with a smooth barrier jacket in accordance with these specifications.

All tanks, vessels and equipment insulated for personnel protection shall be insulated with 1" (min) thick mineral wool blanket and covered with a corrugated barrier jacket.

All insulation shall be installed per manufacturer's installation method.

7. SPECIFICATION SUMMARY

PIPELINE/TANK/EQUIPMENT #_

INSULATION TYPE _____

INSULATION THICKNESS _____

JACKETING TYPE _____ CORRUGATED/SMOOTH/EMBOSSED

JACKETING THICKNESS

FLANGES - Flanges shall/shall not be insulated.

VALVES - Valves shall/shall not be insulated.

NOZZLES - Nozzles shall/shall not be insulated.

EXPANSION JOINTS - Expansion joints are/are not required every _____ feet. See Figures 1, 2, 6 and 7.

ATTACHMENT "A"

This specification shall apply serial number:

SERIAL NUMBERS	DESCRIPTIONS
026	FURNACE OFFTAKE STEAM/N2 PIPING
040	FURNACE SIDEWALL COOLING JACKETS
041	FURNACE BOTTOM COOLING
042	FURNACE DOME AND DONUT SPRAY
043	FURNACE MONKEY COOLING
044	FURNACE FLEX CABLE/HOLDER WATER
045	FURNACE PRESS. INSTR. (DRAFT LINE)
046	N2 PIPING TO T-SEALS/FEED CHUTES
062	HOLDER HYDRAULICS
107	NITROGEN TO FEED BINS
108	KNIFE GATE HYDRAULICS
140	SLAG PIT SPRAY PIPING
158	1ST PASS SLURRY TANK VENT
160/190	1ST & 2ND PASS SLURRY PIPING
161/191	BOTTOM DROP VALVE
162/192	1ST & 2ND PASS DRY SEAL (N2/STEAM/CONDENSATION
163/193	1ST & 2ND PASS TOP OF PRECIP.
165/195	1ST & 2ND PASS DRY BOTTOM AND SLURRY TANK STEAM, WATER AND AIR PIPING
188	2ND PASS SLURRY TANK VENT - (1) 6" LINE
236	HYTOR RECYCLE LINE
260	P4 SUMP STEAM COILS
261	P4 SUMP COVER AND NOZZLES
262	P4 SUMP VENT TO MEDUSA
264	P4 SUMP PHOSSY WATER OVERFLOW
267	P4 SUMP MISC. PIPING (PHOSSY WATER PIPING)
279	FCE AREA/WASTE WATER SUMP PUMP PIPING
282	ANDERSEN SCRUBBER RING
287	MEDUSA SCRUBBER PIPING
425	CENTRIFUGE PRODUCT PIPING
426	SAFETY SHOWER PIPING
429	NATURAL GAS PIPING
440	16" LEVEL DRAINS
440	DRY FIRE LINE
941	NOSAP PIPING

PARTS LIST		
ITEM NO.	QTY	UNIT	DESCRIPTION

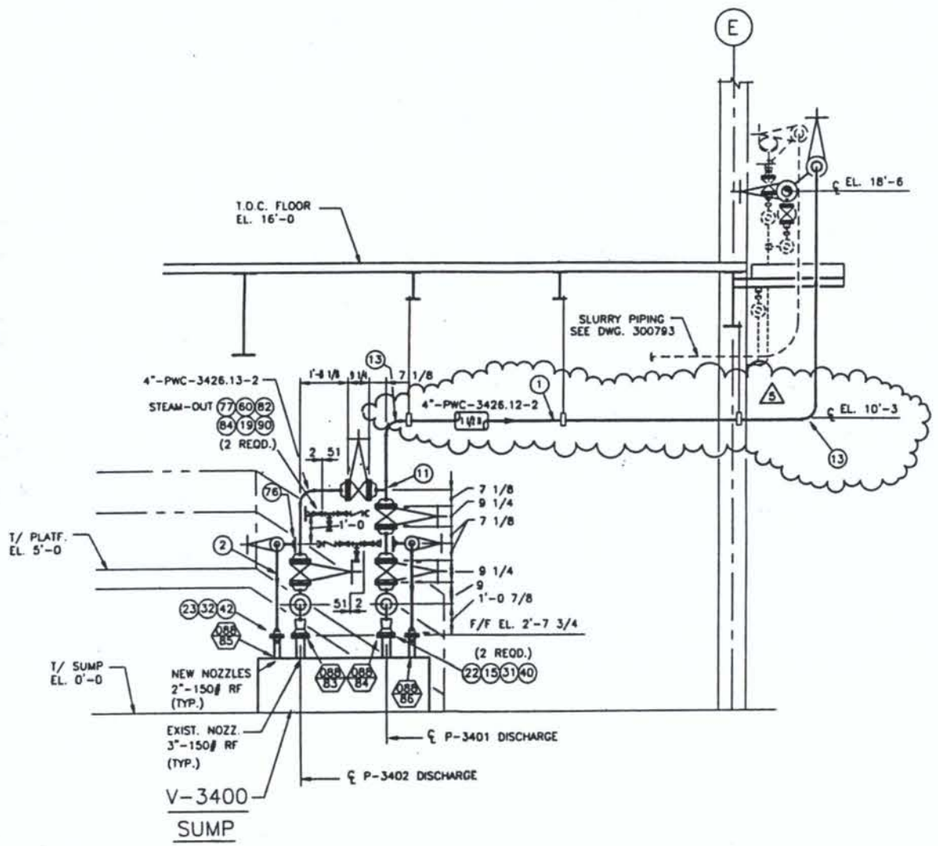

SECTION "A-A"

DWG. 395129

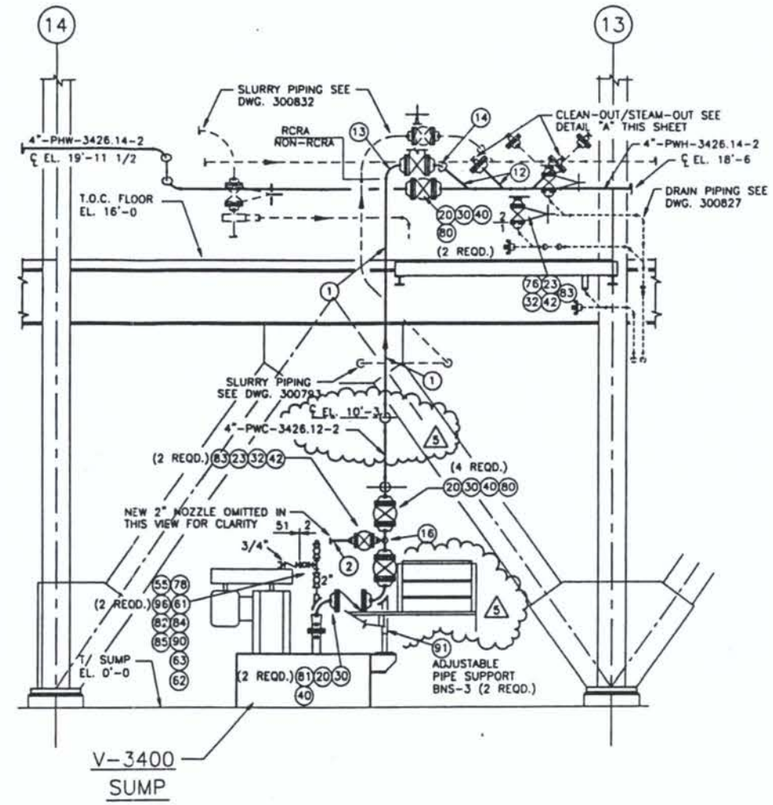

SECTION "B-B"

DWG. 395129

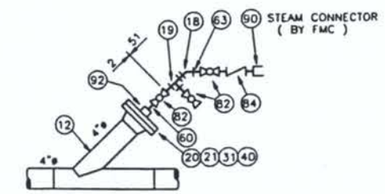

CO SO DETAIL "A"

TYPICAL CLEAN-OUT/ STEAM-OUT CONNECTION
(SPEC. ES-2-2-0)
SEE NOTE 6

63 17

GENERAL NOTES:

1. ALL MATERIAL SHALL CONFORM TO FMC ENGINEERING STANDARD ES-2-2-0, SEE DWG. 395129 FOR MATERIAL.
2. ALL MATERIAL FABRICATION & INSPECTION SHALL CONFORM TO FIELD FABRICATION AND ERECTION SPECIFICATION PP-2001
3. FIELD TO SUPPORT PIPING AS REQUIRED.
4. WORK THIS DRAWING WITH DRAWING 395129.
5. PROJECT NUMBER 980PWD003
6. STEAMOUT CONNECTION SHOWN IS FOR MATERIAL PURPOSES ONLY. FIELD TO DETERMINE ACTUAL CONFIGURATION WITH ADDITIONAL MATERIAL INCLUDED.

MK	ZONE	REVISIONS	DATE	BY	APVD
5		REV. PIPE ELEV. FOR SLAG LADELING MODS.	5/12/99	ABC	RPB
4		REV. PIPE ROUTING FOR SLAG LADELING MODS.	4/10/99	ABC	RPB
3		ISSUED AFC FOR P.O.G. PROJECT	3/12/99	ABC	RPB
3A		ISSUED FOR CLIENT APPROVAL & REDRAWN TO CAD	12/15/98	ABC	
2		REVISED FOR 1997 OVERHAUL	5/9/97	JSS	AJP
1		AS-BUILT AND ADDED REF. DRAWINGS	2/4/92	FBT	RRH
0		ISSUED FOR CONSTRUCTION	7/31/91	DAS	DDB

FMC — PHOSPHORUS CHEMICAL DIVISION — FMC CORPORATION — POCATELLO, IDAHO — FMC

REFERENCE DRAWINGS	
395129	PIPING PLAN NO. 3 FUR.
395098	ARR. SUMP V-3400

PIPING SECTIONS & DETAILS
WASTE WATER SUMP DISCH.
NO. 3 FURNACE
P. O. G. 1998
PHOSPHORUS DEPT

CHG. C90-02 SCALE 3/8"=1'-0"

DRAWN VR 7/28/90 APPROVED DDB 7/30/90
CHECKED LFA 7/30/90 APPROVED

THIS PRINT AND ALL INFORMATION THEREON IS OUR PROPERTY, IS CONFIDENTIAL AND MUST NOT BE MADE PUBLIC OR COPIED UNLESS AUTHORIZED BY US. IT IS SUBJECT TO RETURN ON DEMAND.
PHOSPHORUS CHEMICAL DIVISION

PLANT	SITE	DRAWING NO	DISC	REV
P	F3	395134	P	5

PRINT DATE

Raytheon Engineers & Constructors
A Construction of Raytheon and VEBA

DRAWING STATUS				
STATUS	REV	DATE	SDE	PEM
ISSUED FOR CLIENT APPROVAL	3A	10/21/98	CDP	CTL
APPROVED FOR CONSTRUCTION				
REVISED & APPROVED FOR CONSTRUCTION	5	5/13/99	CDP	CTL

NOT APPROVED FOR CONSTRUCTION UNLESS SIGNED & DATED. DESTROY ALL PRINTS BEARING EARLIER DATE &/OR REV. NO.

REVISION APPROVAL RECORD				REV 5	
DISCIPLINE	REVIEWED	DATE	DISCIPLINE	REVIEWED	DATE
CIVIL	—	—	PIPING	BTH	2/1/99
STRUCTURAL	FJV	3/12/99	ELECTRICAL	TMR	3/12/99
HVAC	—	—	ARCHITECTURAL	—	—
MECHANICAL	SKB	3/12/99	INST & CONTROL	RDT	3/12/99
PROCESS	—	—	ENVIRONMENTAL	—	—
NUCLEAR	—	—	GEN. ARRANG.	—	—

PROFESSIONAL ENGINEER REGISTERED 8686 STATE OF IDAHO CLIFFORD PITTMAN JR.
Rev. 5

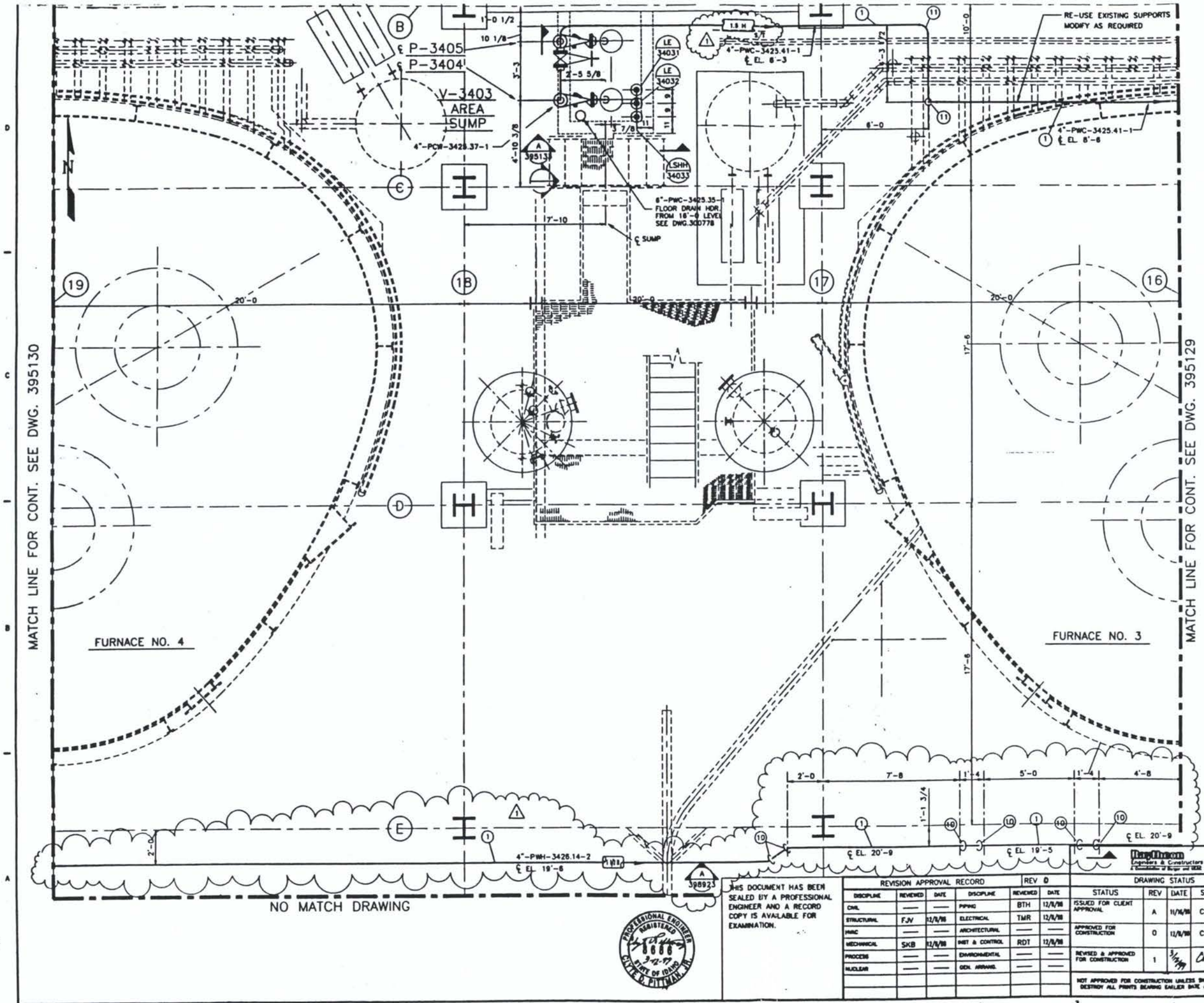

PARTS LIST

ITEM NO.	QTY	UNIT	DESCRIPTION

GENERAL NOTES:

1. ALL MATERIAL SHALL CONFORM TO FMC ENGINEERING STANDARD ES-2-1-0. FOR MATERIAL SEE DWG. 395133 & STANDARD ES-2-2-0. FOR MATERIAL SEE DWG. 395130.
2. ALL MATERIAL FABRICATION & INSPECTION SHALL CONFORM TO FIELD FABRICATION AND ERECTION SPECIFICATION PP-2001
3. FIELD TO SUPPORT PIPING AS REQUIRED.
4. WORK THIS DRAWING WITH DRAWINGS 395129,395130 & 395133
5. PROJECT NUMBER 980PWD003.

MK	ZONE	REVISIONS	DATE	BY	APVD
1		ADDED WASTE WATER LINE & REVISE TITLE	12/17/98	ABC	RPB
0		ISSUED AFC FOR P.O.G. PROJECT	12/7/98	ABC	RPB
A		ISSUED FOR CLIENT APPROVAL	11/24/98	ABC	

PHOSPHORUS CHEMICAL DIVISION
FMC CORPORATION
POCATELLO, IDAHO

THIS DOCUMENT HAS BEEN SEALED BY A PROFESSIONAL ENGINEER AND A RECORD COPY IS AVAILABLE FOR EXAMINATION.

PROFESSIONAL ENGINEER REGISTERED 8686 3-12-97 STATE OF IDAHO CLYTE D. PITTMAN, JR.

REVISION APPROVAL RECORD — REV 0

DISCIPLINE	REVIEWED	DATE	DISCIPLINE	REVIEWED	DATE
CIVIL	—	—	PIPING	BTH	12/8/98
STRUCTURAL	FJV	12/8/98	ELECTRICAL	TMR	12/8/98
HVAC	—	—	ARCHITECTURAL	—	—
MECHANICAL	SKB	12/8/98	INST & CONTROL	RDT	12/8/98
PROCESS	—	—	ENVIRONMENTAL	—	—
NUCLEAR	—	—	GEN. ARRANG.	—	—

DRAWING STATUS

STATUS	REV	DATE	SDE	PEM
ISSUED FOR CLIENT APPROVAL	A	11/16/98	CDP	CTL
APPROVED FOR CONSTRUCTION	0	12/8/98	CDP	CTL
REVISED & APPROVED FOR CONSTRUCTION	1	3/12/99	CDP	CTL

NOT APPROVED FOR CONSTRUCTION UNLESS SIGNED & DATED. DESTROY ALL PRINTS BEARING EARLIER DATE &/OR REV. NO.

REFERENCE DRAWINGS

395133	SECTIONS &DETAILS

CHG. 980PWD003 SCALE 3/8"=1'-0"

THIS PRINT AND ALL INFORMATION THEREON IS OUR PROPERTY, IS CONFIDENTIAL AND MUST NOT BE MADE PUBLIC OR COPIED UNLESS AUTHORIZED BY US. IT IS SUBJECT TO RETURN ON DEMAND.
PHOSPHORUS CHEMICAL DIVISION

PIPING PLAN V-3403 & WASTE WATER LINE NO. 3 & 4 FURNACES P. O. G. 1998 PHOSPHORUS DEPT

DRAWN ABC 11/23/98 APPROVED RPB 11/24/98
CHECKED CRP 11/16/98 APPROVED

DRAWING IDENTIFIER

PLANT	SITE	DRAWING NO	DWG.	REV
P	F3	300789	P	1

PRINT DATE

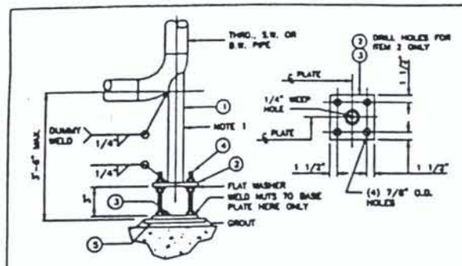

LINE SIZE	ITEM 1 A106-B SMLS. STL. PIPE (NOTE 2)	ITEM 2 & 3 ASTM A36 STEEL PLATE	ITEM 4 A193-B7M STUD BOLT W/ (2) NUTS & (1) WASHER	ITEM 5 ASTM A36 STEEL PLATE
3/4" & 1"	1" SCH. 80	3/8" X 6" X 6"	(4) 3/4" X 3"	1/2" X 8" X 8"
1 1/2" & 2"	1 1/2" SCH. 80	3/8" X 6" X 6"	(4) 3/4" X 3"	1/2" X 8" X 8"
3" & 4"	3" SCH. 40	1/2" X 8" X 8"	(4) 3/4" X 3"	3/4" X 10" X 10"
6" & 8"	4" SCH. 40	1/2" X 9" X 9"	(4) 3/4" X 3"	3/4" X 10" X 10"

NOTES:

1. SUPPORT ASSEMBLY FURNISHED BY FIELD.
2. WHEN PROCESS LINE IS STAINLESS STEEL MAKE BASE ELL PIPE STAINLESS STEEL. USE XAS-2.
3. USE AT INLETS AND OUTLETS OF ROTATING EQUIPMENT.

XA-2 & XAS-2

3/4"-10" ADJUSTABLE BASE ELL SUPPORT

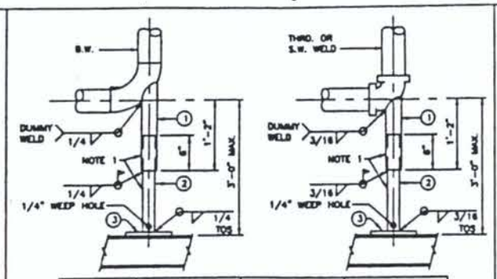

LINE SIZE	ITEM 1 A106-B A53-B SMLS. STEEL PIPE (NOTE 6)	ITEM 2 A106-B SMLS. STL. PIPE	ITEM 3 ASTM A36 STEEL PLATE
1/2", 3/4" & 1"	1" SCH. 80	1/2" SCH. 80	3/8" X 6" X 6"
1 1/2" & 2"	1 1/2" SCH. 80	1" SCH. 80	3/8" X 6" X 6"
3" & 4"	3" SCH. 40	1 1/2" SCH. 40	1/2" X 8" X 8"
6" & 8"	3" SCH. 40	2 1/2" SCH. 40	1/2" X 8" X 8"

NOTES:

1. SUPPORT ASSEMBLY FURNISHED BY FIELD.
2. TO BE USED ON PLATFORMS (GRATING, CHK'D PLATE OR STEEL) ONLY.
3. DO NOT USE ON CONCRETE FLOORS.
4. DO NOT USE AT INLETS OR OUTLETS OF EQUIPMENT SUBJECT TO VIBRATIONS.
5. DO NOT USE ON GALVANIZED PIPING.
6. FOR STAINLESS STEEL SPECS. USE BNS-3 A312 TP316L.

BN-3 & BNS-3

1/2" - 8" NON-ADJUSTABLE BASE ELL SUPPORT

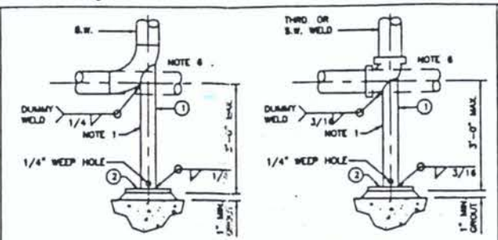

LINE SIZE	ITEM 1 A106-B SMLS. STL. PIPE	ITEM 2 ASTM A36 STEEL PLATE
1/2"	1/2" SCH. 80	1/4" X 4" X 4"
3/4"	3/4" SCH. 80	1/4" X 4" X 4"
1" & 1 1/2"	1" SCH. 80	3/8" X 6" X 6"
2"	1 1/2" SCH. 80	3/8" X 6" X 6"
3" & 4"	3" SCH. 40	1/2" X 8" X 8"
6" & 8"	4" SCH. 40	1/2" X 9" X 9"

NOTE 8

NOTES:

1. SUPPORT ASSEMBLY FURNISHED BY FIELD.
2. TO BE USED ON CONCRETE FLOORS ONLY—PROVIDE FOR 1" MIN. GROUT IN ALL CASES.
3. DO NOT USE AT INLETS OR OUTLETS OF EQUIPMENT SUBJECT TO VIBRATIONS.
4. DO NOT USE ON GALVANIZED PIPING.
5. WHEN PROCESS LINE IS 304 OR 316 STN STL MAKE BASE ELL PIPE 304 STN STL., USE BNS-5.
6. USE FOR HORIZONTAL RUNS.

BN-5 & BNS-5

1/2" - 8" NON-ADJUSTABLE BASE ELL SUPPORT

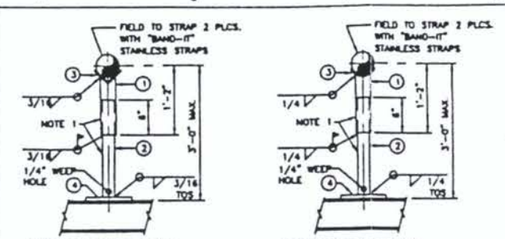

PIPE SIZES SMALLER THAN 2" PIPE SIZES 2" AND LARGER

BN-4 LINE SIZE	ITEM 1 A106-B OR A53-B SMLS. STL. PIPE	ITEM 2 A106-B OR A53-B SMLS. STL. PIPE	ITEM 3 ASTM A36 ANGLE OR A53-B SMLS PIPE	ITEM 4 ASTM A36 STEEL PLATE
1/2", 3/4" & 1"	1" SCH. 80	1/2" SCH. 80	1"x 1"x 3/16"x 2"LG.	3/8" X 6" X 6"
1 1/2"	1 1/2" SCH. 80	1" SCH. 80	1 1/2"x 1 1/2"x 3/16"x 2"LG.	3/8" X 6" X 6"
2"	1 1/2" SCH. 80	1" SCH. 80	1/3 PIPE SECT. X 4" LG.	3/8" X 6" X 6"
3" & 4"	2" SCH. 40	1 1/2" SCH. 80	1/3 PIPE SECT. X 4" LG.	1/2" X 8" X 8"
6" & 8"	3" SCH. 40	2 1/2" SCH. 40	1/3 PIPE SECT. X 6" LG.	1/2" X 8" X 8"

NOTES:

1. SUPPORT ASSEMBLY FURNISHED BY FIELD.
2. TO BE USED ON PLATFORMS (GRATING, CHK'D PLATE OR STEEL) ONLY.
3. DO NOT USE ON CONCRETE FLOORS.
4. DO NOT USE AT INLETS OR OUTLETS OF EQUIPMENT SUBJECT TO VIBRATIONS.

BN-4 & BNS-4

1/2" - 8" NON-ADJUSTABLE HORIZONTAL SUPPORT

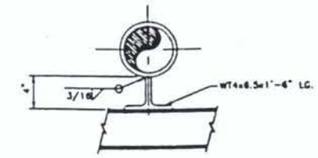

PS-1

SUPPORT - 2" THRU 12"
CARBON STEEL PIPE

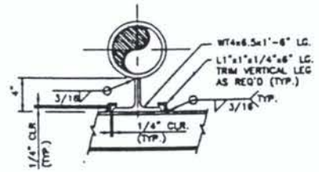

PSG-1

GUIDE - 2" THRU 12"
CARBON STEEL PIPE

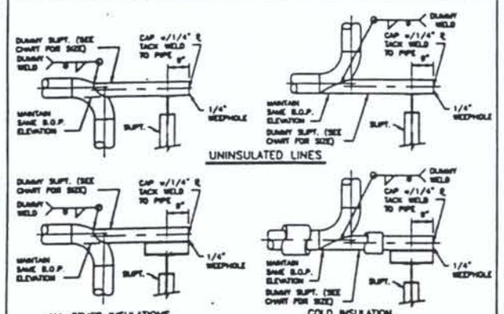

DUMMY LEG MATERIAL	
– LINE MATERIAL –	– DUMMY LEG MATERIAL –
CHROME MOLY	C.S. 750F MAX., CHROME MOLY ABOVE 750F
S.S. SCH. 30 OR GREATER	USE SAME MATERIAL
S.S. SCH. 10 OR LESS	USE SAME MATERIAL
ALUMINUM	USE SAME MATERIAL
CARBON STEEL	USE SAME MATERIAL

DUMMY WELD SIZE			
DUMMY LEG SIZE	1/2"-3"	4"-6"	10"-16"
WELD SIZE	3/8"	7/16"	1/2"

DUMMY SUPPORTS

WELDED PIPE

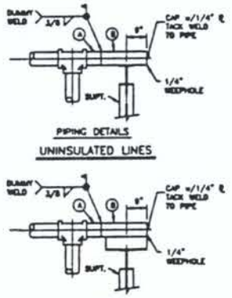

MATERIAL	
ITEM A	LINE SIZE ROUND BARSTOCK PLUG PER SPEC.
ITEM B	SCH. 80 PIPE PER SPEC., O.D. SAME AS LINE SIZE

DUMMY SUPPORTS

SOCKET WELD OR THREADED PIPE

LINE SIZE	18'-0" SPAN		18'-0" SPAN		24'-0" SPAN				30'-0" SPAN				40'-0" SPAN			
	"A" = 8'	16'	"A" = 8'	12'	"A" = 8'	12'	16'		"A" = 8'	10'	15'	20'	"A" = 8'	10'	15'	20'
2"	1 1/2"	2"														
3"	2"	3"	2"	3"												
4"	2"	3"	2"	3"		4"	4									
6"	3"	4"	3"	4"	4"	4"	6"			6	6"	6"				
8"	4"	4"	4"	4"	4"	6"	6"	6"	6"	6"	6"	6"				
10"	4"	6"	4"	6"	6"	6"	8"	8"	8"	8"	8"	8"				
12"	6"	8"	6"	8"	6"	8"	8"	8"	8"	8"	8"	10"				
14"	6"	8"	6"	8"	8"	8"	8"	8"	8"	8"	8"	10"		10"	10"	10"
16"	8"	8"	8"	8"	8"	10"	10"	8"	10"	10"	10"	10"	8"	10"	10"	12"
18"	8"	8"	8"	10"	8"	10"	10"	8"	10"	10"	10"	10"	8"	10"	12"	12"
20"	8"	8"	8"	10"	8"	10"	10"	8"	10"	10"	10"	12"	10"	10"	12"	14"
24"	8"	10"	8"	10"	10"	12"	12"	10"	12"	12"	12"	14"	10"	12"	14"	16"

GENERAL NOTES:

1. THIS CHART IS BASED ON SINGLE SPAN SPACING AND BARE STANDARD WEIGHT PIPE FILLED WITH WATER.
2. FOR INSULATED LINES, DECREASE THE SPAN DISTANCE TWO (2) FEET ON PIPE SIZES 2" THRU 8". ON SIZES 10" THRU 24" THE CHART CAN BE USED FOR INSULATED LINES.

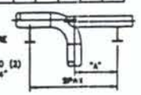

DUMMY SUPPORTS

SIZE CHART

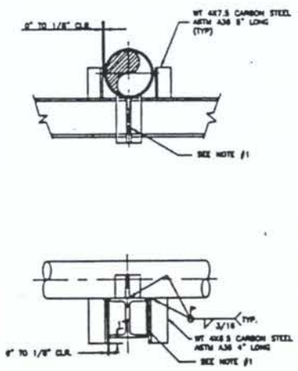

NOTES:

1. STIFFENER PLATES SHALL BE SPECIFIED BY STRESS ENGINEERING WHEN REQUIRED AT SUPPORT BEAMS FOR ANCHORED LINES.

PA-2

ANCHOR - 2" THRU 16" UNINSULATED LINES

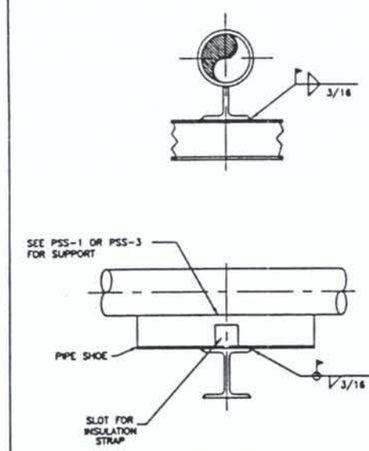

PSA-1 & PSA-3

ANCHOR - 2" THRU 12" INSULATED LINES

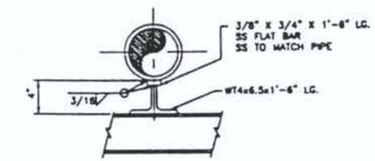

PS-3

SUPPORT - 2" THRU 12"
STAINLESS STEEL PIPE

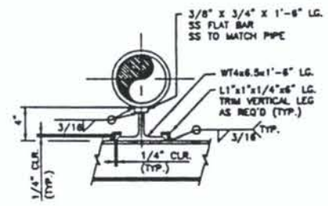

PSG-3

GUIDE - 2" THRU 12"
STAINLESS STEEL PIPE

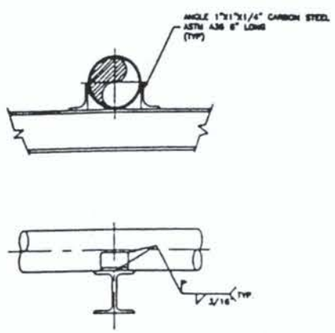

PA-1

ANCHOR

MAX. LINE SIZE THRU 2"

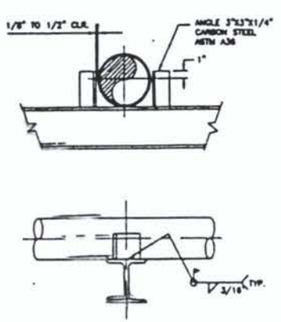

PG-1

GUIDE - 2" THRU 10" UNINSULATED LINES

PROFESSIONAL ENGINEER REGISTERED 8686 3-29-99 STATE OF IDAHO CLYDE P. PITTMAN JR.

Rev. 3

THIS DOCUMENT HAS BEEN SEALED BY A PROFESSIONAL ENGINEER AND A RECORD COPY IS AVAILABLE FOR EXAMINATION

REVISION APPROVAL RECORD					REV 3
DISCIPLINE	REVIEWED	DATE	DISCIPLINE	REVIEWED	DATE
CIVIL	—	—	PIPING	BTH	1/23/95
STRUCTURAL	FJV	1/23/95	ELECTRICAL	NJS	1/23/95
HVAC	—	—	ARCHITECTURAL	—	—
MECHANICAL	CTL	1/23/95	INST & CONTROL	RDT	1/23/95
PROCESS	—	—	ENVIRONMENTAL	—	—
NUCLEAR	—	—	GEN ARRANG.	—	—

Raytheon Engineers & Constructors

DRAWING STATUS				
STATUS	ISSUE	DATE	SDE	PEM
APPROVED FOR CONSTRUCTION	0	10/11/94	BTH	CTL
REVISED & APPROVED FOR CONSTRUCTION	3	3/29/99		

NOT APPROVED FOR CONSTRUCTION UNLESS SIGNED & DATED
DESTROY ALL PRINTS BEARING EARLIER DATE &/OR REV NO

ZONE	REVISIONS	DATE	BY	APVD
3	GENERAL REVISIONS	3/24/99	WHD	RLA
2	REVISED DETAILS AS NOTED	11/16/94	JCH	LGP
1	ADDED PSS-2	10/27/94	JCH	LGP
0	APPROVED FOR CONSTRUCTION	10/10/94	BTH	LGP
P	PRELIMINARY	9/29/94	BTH	

FMC PHOSPHORUS CHEMICAL DIVISION
FMC CORPORATION
POCATELLO, IDAHO

REFERENCE DRAWINGS	
398278	MISC. PIPE SUPPORTS

PIPING
MISC. STANDARD
SUPPORTS AND DETAILS

PHOSPHORUS DEPT.

DRAWN JCH 9/28/94 APPROVED LGP 9/30/94
CHECKED CRP 10/08/94 APPROVED

C94-20 CHG NONE SCALE

THIS PRINT AND ALL INFORMATION THEREON IS OUR PROPERTY, IS CONFIDENTIAL AND MUST NOT BE MADE PUBLIC OR COPIED UNLESS AUTHORIZED BY US. IT IS SUBJECT TO RETURN ON DEMAND. PHOSPHORUS CHEMICAL DIVISION

DRAWING IDENTIFIER

PLANT	SITE	DRAWING NO	DISC	REV
P	GN	398277	P	3

PRINT DATE

ORIGINAL

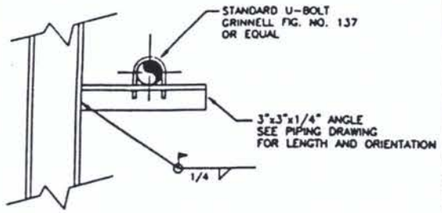

MSS-1
MISC. PIPE SUPPORT
MAY BE USED FOR HORIZONTAL OR VERTICAL PIPE RUNS

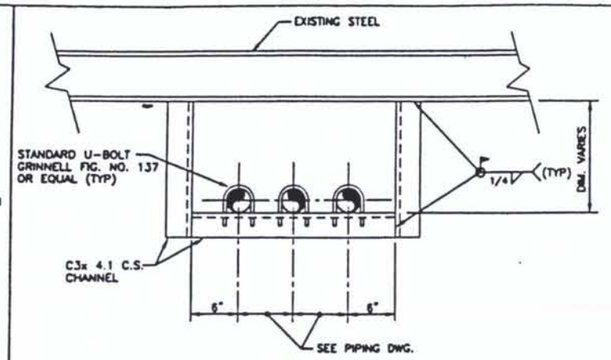

MSS-2
MISC. PIPE SUPPORT
FOR 4" AND SMALLER PIPE RUNS

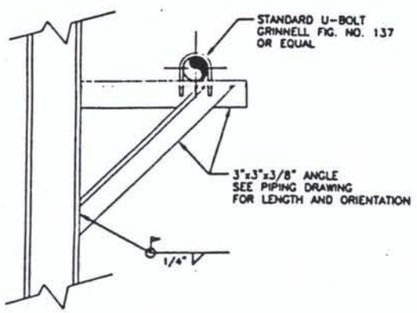

MSS-3
MISC. PIPE SUPPORT

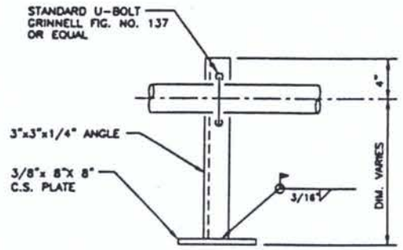

MSS-5
MISC. PIPE SUPPORT
FOR 3" AND SMALLER PIPE

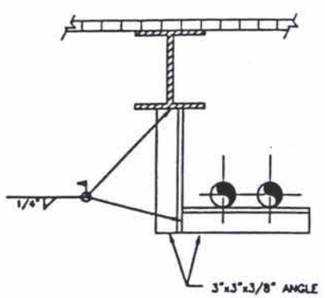

MSS-4
MISC. PIPE SUPPORT

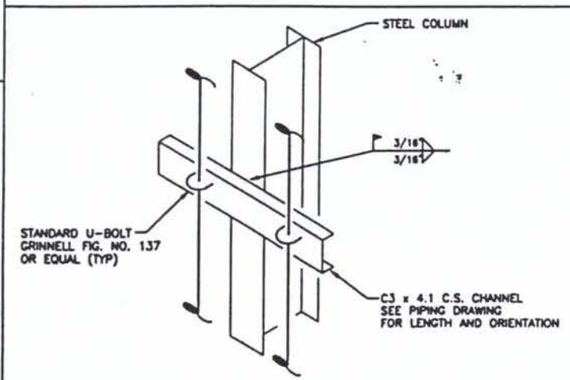

MSS-6
MISC. PIPE SUPPORT

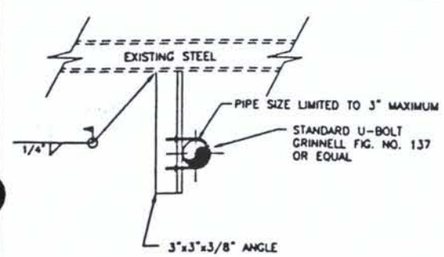

MSS-7
MISC. PIPE SUPPORT

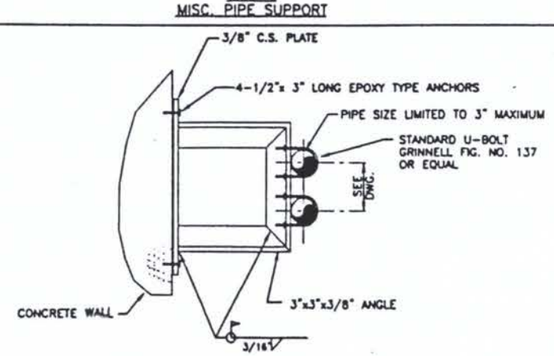

MSS-8
MISC. PIPE SUPPORT

UPPER PIECE NO.

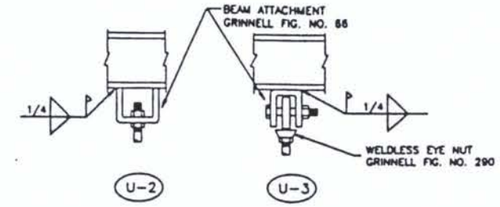

MIDDLE PIECE NO.

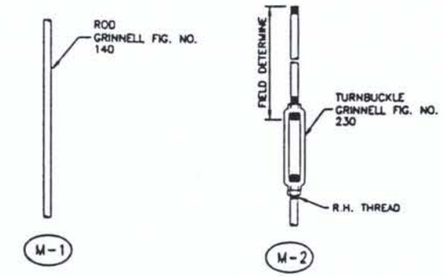

PIPE SIZE	ROD DIA.
1/2"	3/8"
3/4"	3/8"
1"	3/8"
1 1/2"	3/8"
2"	3/8"
3"	1/2"
4"	5/8"
6"	3/4"
8"	3/4"
10"	7/8"
12"	7/8"

LOWER PIECE NO.

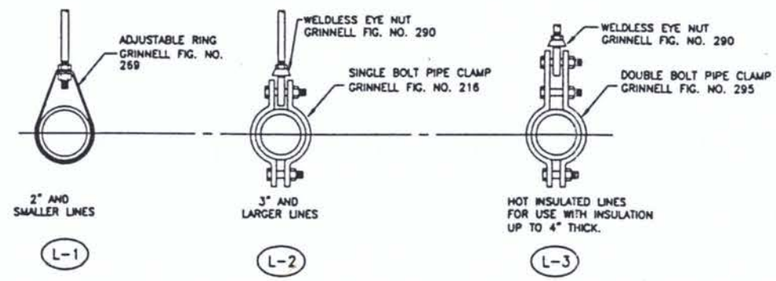

HANGER ROD COMPONENTS
ALL MATERIAL BY FIELD EXCEPT AS NOTED

PROFESSIONAL ENGINEER REGISTERED 8686 3-27-94 STATE OF IDAHO CLYDE D. PITTMAN JR.
Rev. 2

THIS DOCUMENT HAS BEEN SEALED BY A PROFESSIONAL ENGINEER AND A RECORD COPY IS AVAILABLE FOR EXAMINATION.

REVISION APPROVAL RECORD — REV 2

DISCIPLINE	REVIEWED	DATE	DISCIPLINE	REVIEWED	DATE
CIVIL	—	—	PIPING	BTH	1/23/95
STRUCTURAL	FJV	1/23/95	ELECTRICAL	NJS	1/23/95
HVAC	—	—	ARCHITECTURAL	—	—
MECHANICAL	CTL	1/23/95	INST & CONTROL	RDT	1/23/95
PROCESS	—	—	ENVIRONMENTAL	—	—
NUCLEAR	—	—	GEN. ARRANG.	—	—

Raytheon Engineers & Constructors

DRAWING STATUS

STATUS	ISSUE	DATE	SDE	PEM
APPROVED FOR CONSTRUCTION	0	10/11/94	BTH	CTL
REVISED & APPROVED FOR CONSTRUCTION	2	3/29/94	CRP	[illegible]

NOT APPROVED FOR CONSTRUCTION UNLESS SIGNED & DATED. DESTROY ALL PRINTS BEARING EARLIER DATE &/OR REV NO

MK	ZONE	REVISIONS	DATE	BY	APVD
2		GENERAL REVISIONS	3/24/99	WHD	RLA
1		ADDED MSS-7 & MSS-8	01/20/95	GJW	LGP
0		APPROVED FOR CONSTRUCTION	10/10/94	BTH	LGP
P		PRELIMINARY	9/29/94	BTH	

FMC — PHOSPHORUS CHEMICAL DIVISION
FMC CORPORATION
POCATELLO, IDAHO — FMC

REFERENCE DRAWINGS

398277	MISC. PIPE SUPPORTS

PIPING
MISC. STANDARD SUPPORTS AND DETAILS

PHOSPHORUS DEPT.

DRAWN BTH 9/29/94 APPROVED LGP 10/09/94
CHECKED CRP 10/08/94 APPROVED

CHG C94-20 SCALE NONE

THIS PRINT AND ALL INFORMATION THEREON IS OUR PROPERTY, IS CONFIDENTIAL AND MUST NOT BE MADE PUBLIC OR COPIED UNLESS AUTHORIZED BY US. IT IS SUBJECT TO RETURN ON DEMAND.
PHOSPHORUS CHEMICAL DIVISION

DRAWING NUMBER

PLANT	SITE	DRAWING NO	DISC	REV
P	GN	398278	P	2

PRINT DATE

ORIGINAL

APPENDIX 5
ANCILLARY PUMPING
SYSTEM

APPENDIX 5 AUXILIARY EQUIPMENT

SUMP PUMP INFORMATION & SPECIFICATIONS

Wastewater Collection sump Pumps P-3401, P-3402:
Toyo Pump – Type DEC 81-80, Vertical Recesses Impeller Pump

FUME FAN INFORMATION & SPECIFICATIONS

Wastewater Collection sump Fume Fan F-3400
New York Blower, 2110S Pressure Blower

JOB C-90-02
FILE 7.1.34
COLLECTION SUMP PUMPS
P-1401, 1402, 2401, 2402,
3401, 3402, 3608, 3609,
4401, 4402

TOYO PUMPS

the Innovators

TYPE DEC
DFC

HEAVY DUTY VERTICAL CANTILEVER PUMPS

INSTALLATION, OPERATION & MAINTENANCE INSTRUCTIONS

TOYO PUMPS NORTH AMERICA CORPORATION

200 - 171 West Esplanade
North Vancouver, B.C.
Canada V7M 1A1

Telephone: (604) 988-7187
Fax: (604) 988-2493
Telex: 04352848 VCR

TABLE OF CONTENTS

section I	INTRODUCTION	1
	I-A General	1
	I-B Safety	1
section II	INSTALLATION	1
	II-A Check Upon Arrival	1
	II-B Storage	1
	II-C Handling	2
	II-D Alignment	2
	II-E Support Beams	2
	II-F Discharge Pipe	2
	II-G Pump	2
	II-H V-Belt Drives	2
	II-J Direct Drive Connection	3
section III	OPERATION & MAINTENANCE INSTRUCTIONS	3
	III-A Starting a Vertical Pump	3
	III-B Lubrication	3
	III-C Seals	4
section iv	TROUBLE SHOOTING CHART	5
section v	DISASSEMBLY & ASSEMBLY PROCEDURES	6
	V-A Disassembly	6
	V-B Inspection and Parts Replacement Guideline	6
	V-C Assembly	7
section vi	RECOMMENDED SPARE PARTS	8

section I - INTRODUCTION

I-A GENERAL

Do not install this equipment other than in accordance with the instructions contained in this manual.

The descriptions and instructions in this manual cover the standard design of the equipment and the more popular options when possible. This manual does not cover all design details and variations, nor does it provide for every contingency which may be encountered. When information cannot be found in this manual, contact the nearest Toyo branch office.

This instruction book should be read completely before starting installation. The equipment is capable of trouble-free operation when properly installed, operated and maintained. These instructions present the basic information and methods required for proper installation and maintenance.

This pump has been designed to provide safe and reliable service. However, it is both a pressure vessel and a piece of rotating machinery. Therefore, the operator (s) must exercise good judgement and proper safety practices to avoid damage to the equipment and surroundings to prevent personal injury. The instructions in this manual are intended for personnel with a general training in operation and maintenance of centrifugal pumps.

I-B SAFETY

It is assumed that your safety department has established a safety program based upon a thorough analysis of industrial hazards. Before installing, operating or performing maintenance on the pump and associated components described in this manual, it is suggested that the safety program be reviewed to ensure that it covers the hazards arising from high speed rotating machinery.

In general, all personnel should be guided by all the basic rules of safety associated with the equipment and the process.

It should be understood that the information contained in this manual does not relieve operating and maintenance personnel of the responsibility of exercising normal good judgment in operation and care of the pump and its components.

Toyo Corporation reserves the right to change the design, construction, or material of any part without incurring the obligation of installing such changes on pumps already delivered.

section II - INSTALLATION

II-A CHECK UPON ARRIVAL

The unit should be inspected immediately upon arrival, and any irregularities arising due to shipment should be reported to the carrier.

Care should be taken when unpacking pumps. A copy of this instruction book as well as instruction sheets for other various components (such as the driver) may be included in the shipment. Put these papers in a safe, accessible place for ready reference when required. It is important that the entire contents of this booklet be studied before installation.

Pump parts and accessories may be packed inside shipping containers, or attached to skids in individual packages. Inspect all containers, crates and skids before discarding.

II-B STORAGE

The pump is protected against corrosion for the period of shipment and installation only.

If the pump is not to be installed at once, find a clean, dry location for storage. Unit should be stored in an approximately level position with no stress applied. Protective coverings should be left in place. The pump can be left in its shipping container or skid for storage.

Pumps with grease-lubricated shaft bearings are shipped with grease installed, therefore, no special preservation measures are required. Pumps with other than grease-lubricated bearings are usually furnished with a corrosion-resistant shaft material, so also require no special preservation measures.

C. HANDLING

Use care when moving pumps. Rough handling of the pump can cause breakage or permanent misalignment. Carefully sling pumps so that shaft will not be bent or damaged when lifting.

It is advisable to raise the pump into the horizontal position before uncrating. If this is not possible, pumps over eight feet long must be supported at more than one place when raising to the vertical position. DO NOT sling or raise the pump by using the motor support only.

Make sure that any equipment used to lift the pump or any of its components is capable of supporting the weights encountered. Make sure that all parts are properly rigged before attempting to lift.

D. ALIGNMENT

The pump was checked during assembly at the factory to make sure that the pump shaft rotated freely by hand.

Handling during shipment, storage, or preparation for installation could have caused distortions resulting in pump shaft binding.

E. SUPPORT BEAMS

The "I" beams or channels which support the pump must be sufficiently substantial to give rigid support to the pump and to absorb vibration. They must be level and one must be movable in order to lower the pump into the sump.

The bolts which secure the pump to the beams should be 1/8" less in diameter than the holes in the pump frame.

CAUTION
Provision must be made to support discharge piping independently from the pump to prevent excessive loads and to maintain proper pump-driver alignment.

F. DISCHARGE PIPE

The pipe must be supported independently near the pump to prevent any stress from being transmitted to the pump.

Arrangements should be made to keep the pump from back-spinning severely during shutdown. On a long discharge line, a non-slam check valve should be installed. At no point should the pump be started while the impeller is in reverse rotation.

G. PUMP

The sump must be screened to prevent any foreign objects from falling into the sump and blocking the pump. The openings in the screening should be the same size or smaller maximum particle size that the pump can handle. See Table 1 below.

Table 1 MAXIMUM PARTICLE SIZE

Model	No Agitator*	With Agitator
41-50	1.8 (45 mm)	not available
51-80	2.8 (72 mm)	1.4 (35 mm)
61-100	3.5 (90 mm)	1.8 (45 mm)
71-50	1.8 (45 mm)	0.8 (20 mm)
71-100	3.5 (90 mm)	1.8 (45 mm)
81-150	5.3 (135 mm)	2.6 (65 mm)

*90% of suction and discharge area

H. V-BELT DRIVES

Well designed and properly installed V-belt drives are capable of running for years without maintenance. There are a few points that should be checked periodically.

1. Check Belt Fit
Regardless of the belt section used, the belt should never be allowed to bottom in the groove. This will cause the belts to lose their wedging action and slippage can occur. Sheaves or belts that permit such a condition to occur should be changed.

2. Keep Belts Clean
Dirt and grease reduce belt life. Belt dressing affects performance only temporarily and is never recommended. Maintaining a clean drive is a better idea.

3. **Use Belt Guards**
Belt guards protect personnel from danger and the drive from contamination. Inspect periodically to assure that belts do not rub against the guard.

4. **Maintain Proper Belt Tension**
Proper tension is the primary reason for long belt life. Improper tension could cause belt fatigue and/or hot bearings.

5. **Sheave Alignment**
Alignment must be maintained for full power transmission, minimum vibration, and long drive life.

If any questions arise pertaining to the drive limitations, consult the manufacturer.

II.J DIRECT DRIVE CONNECTION

Parallel alignment may be checked with a dial indicator and suitable support brackets. Depending on coupling size and shaft gap, angular misalignment may be checked with feeler gauges, inside micrometers or dial indicators.

CAUTION
The permissible amount of misalignment will vary with the coupling type. Follow the manufacturer's recommendations.

Section III OPERATION & MAINTENANCE INSTRUCTIONS

III.A STARTING A VERTICAL PUMP

Before starting a new pump, check the pump supports and piping to be certain that they conform to the specifications in the "Installation Instructions" section.

The bearing housing is properly filled with grease before shipment. Under normal conditions, grease should be added every month but care should be taken not to over-lubricate.

On the DEC series pumps the shaft is blocked (in the suction head area) with wood wedges to furnish support during shipment. Be sure to remove these blocks.

Turn the pump shaft by hand. If the pump does not turn freely, it should be checked to determine what is causing the binding.

Check the motor rotation to be certain that it will drive the pump in the correct direction.

Correct rotation is clockwise as viewed from the top.

WARNING
For models with the patented agitator, reverse rotation of the pump may cause the agitator to unscrew which may damage the impeller.

Do not operate the pump with a closed discharge line. At the shut-off point, with no water flow, the horsepower delivered to the pump is rapidly converted into heat and presents great potential danger.

WARNING
Do not operate the pump without proper drive guard in place.

III.B LUBRICATION

The DEC pump bearings are grease lubricated. A sufficient amount of grease has been used during the initial assembly to charge the bearings. Grease fittings have been provided to allow regreasing of the bearings. The grease selected at the factory is the optimum for the bearing size and the shaft surface speed generated at the sold conditions.

CAUTION
If a speed change is made to one HIGHER than originally sold for, a bearing grease change may be required for the higher generated surface speeds.

CAUTION

In most cases Toyo will be using Shell Alvania R3 grease, a grease based on lithium 12 hydroxy stearate soap. We may in special circumstances, at high surface speeds use a synthetic Teflon grease formulated specifically for Toyo.

CAUTION

Grease formulations vary widely in the type of lubricant, lubricant carrier or soap and additives for load and rust prevention. Mixing different grease types may produce a grease in the bearing with significantly different characteristics than desired. DO NOT MIX DIFFERENT GREASE TYPES! ASSURE THE GREASE USED AT REPLENISHMENT INTERVALS IS COMPATIBLE.

1. **Start-up**

On the initial start-up a short period of running time is required to allow the bearings to centrifuge out unwanted over-packed grease. The bearings are self centrifuging.

During this run in time grease may be added through the grease fittings for both the upper and lower bearings.

The bearing housing temperature should be monitored since over greasing is the leading cause of hot bearings. The bearing housing temperature will stabilize within the first hour or so of operation at constant load and speed.

Bearing temperatures will vary with the operating point of a centrifugal pump on a fixed speed performance curve. i.e. Operation at low flows will generate higher temperatures than at higher flows.

2. **Regrease interval**

The bearings should be regreased with the pump running to allow the bearings to centrifuge out the old and surplus grease. Grease life varies considerably dependent on bearing size, type, rotating speed, operating temperature and by the ingress of moisture, gases and foreign matter.

It is not possible to suggest or recommend a regrease interval suitable for all installations. As a general guide, when the operating temperature is over 80°C (176°F), for every 15°C (27°F) rise in temperature the relubrication interval should be halved. The maximum working temperature of the grease must never be exceeded! If the bearing housings are being frequently splashed with liquid then the relubrication interval should be once every week unless marine greases are being used. The maximum working temperature of the standard grease supplied by the factory is approximately 150°C (300 °F).

Very generally Toyo recommends an initial regreasing interval of about one month. This regrease interval may be lengthened with the experience and the discretion of the operator.

At least once a year, or more often if regreasing intervals are frequent, the bearing housing should be opened, the housing cleaned of old grease accumulations and the bearings washed in clean solvent, blown dry, examined, reinstalled and regreased.

Do not reuse bearings that have obvious visual defects or that have been discolored to a light blue. Examine the lip seals or labyrinths for wear during all bearing housing disassemblies.

III. C. SEALS

The bearing housing seals may generate some heat until broken in. Seal temperature should stabilize within the first two hours of operation.

NOTE:

Lip seals must have lubrication or they will experience an undesirable temperature rise due to their proximity to the bearings. The seal lip may harden and deteriorate, and at high rubbing speeds they may groove the shaft.

Section IV TROUBLESHOOTING CHART

	PROBLEM	PROBABLE CAUSES	ACTION
PUMP WILL NOT START	No Sound	No Power Faulty cable connection Cable cut or broken core Motor single phased Fuse blown Control Switches damaged or blocked	Consult with the power company, or check the generator Check and clean connection of each phase Repair or replace faulty cable Check each phase Replace with new fuse or switch circuit breaker Repair or replace faulty switch
	Makes Noise	Motor burning out Bearing failed Airlock Impeller obstruction	Megger test motor and replace or repair motor Replace bearing Increase depth of pump Remove obstruction
PUMP ROTATES, BUT WITH THE FOLLOWING PROBLEMS	Noise or Vibration	Impeller touching stationary parts Faulty or worn bearing Impeller partially blocked causing unbalance Impeller worn causing unbalance Shaft bent	Check installation, remove any stresses Replace bearing Remove blockage Replace impeller Replace shaft and overhaul throughly.
	Insufficient Capacity	Wrong direction of rotation Pump does not produce enough head Air builds up in pipeline Impeller partially blocked Cavitation Suction opening or discharge line partically blocked	Switch two of the three phases. (see arrow indicating direction of rotation.) Consult Toyo. Change pump selection. Re examine piping layout (always arrange delivery pipe to run gradually upward) Remove blockage Increase depth of pump Remove obstruction
	Motor Overload/ Overload Protector Actuates (Not standard equipment)	Slurry specific gravity is too high Total head is lower than pump rating (pump attempts to pump too much water) Large decrease in voltage Only single phase motor operation Speed too high	Dilute slurry. Contact Toyo for selection with extra horsepower or reduced impeller size. Increase system head Increase size of power line or check power source Check each phase and repair Check to see that V-belt drive selection is correct

section V DISASSEMBLY & ASSEMBLY PROCEDURES

V-A DISASSEMBLY

1. In general, maintenance should be performed by qualified personnel familiar with the operation of centrifugal pumps.

2. For vertical cantilever pumps, it is necessary to lift the pump completely out of the sump. Only then will the casing and the impeller be properly accessible. The pump may be dismantled either suspended vertically from the thread in the top of the shaft or by supporting it horizontally. Care must be taken to support the shaft properly when removing the bearings in the horizontal position.

> **CAUTION**
> Before removing the pump from its installation ensure that the motor is disconnected.

3. Prior to bringing the pump into the shop area, ensure that the pump is well cleaned and decontaminated in accordance with the owner's site safety procedures.

4. Ensure that the proper tools for disassembly are at hand. No special tools are required.

5. Remove the V-belt guard, V-belts, drive motor and motor support plate. Proceed to remove the pump V-belt sheave adapter bushing and keys.

6. On models with the agitator; this has a standard ACME thread and may be removed by impacting with a soft faced mallet in a counterclockwise direction. The agitator is high chrome iron which is hard and brittle and may be prone to breakage.

7. Remove suction strainer if present.

8. Disconnect discharge pipe from discharge flange.

9. Unbolt the casing from the support column and remove.

10. Remove impeller screw and remove impeller collar and impeller together with the impeller key. Now the main parts of the pump may be checked for wear.

11. Unbolt the bearing housing from the baseplate and remove both the baseplate and the delivery pipe.

12. Remove the support column to bearing housing bolts, ensuring that the column is well supported or slung. The support column may now be removed over the shaft. The support column flanges have closely machined faces. Care should be taken to avoid nicking or burring these faces.

13. Remove the top bearing cap bolts. Lift the cap off over the top of the shaft.

14. Remove the lock nut holding the top bearing in place. The two angular contact bearings are heated on and require the same energy source for removal or bearing pullers. Support shaft properly to avoid damage to radial bearing.

15. Slide the thrust bearing hub off over top of shaft.

16. Remove cap screws in the bottom bearing cap and carefully slide the cap off the end of the shaft. The outer race of the bearing has been heated on and therefore must be heated up or pulled to be removed.

17. Bearing housing may now be removed over end of shaft.

V-B INSPECTION AND PARTS REPLACEMENT GUIDELINES

1. Impeller - Replace if impeller shows excessive erosion, corrosion or vane breakage. Keyway and hub must be in good condition. Reduction in hydraulic performance may result from excessive wear.

2. Shaft Sleeve, when present- Sleeve surface must be smooth. Replace if badly grooved or cut.

3. Casing - Replace if badly worn.

4. Bearings - Inspect for obvious visual defects. Replace if worn, discoloured or if loose or rough and noisy when rotated.

5. Oil Seals - Replace if worn or otherwise damaged.

6. Package and O-rings - Replace.

7. General - All parts should be thoroughly cleaned before assembly. All nicks and burrs should be removed.

VI. ASSEMBLY

1. In general the assembly is performed in the reverse order to the dismantle procedure.

2. Gather and inspect all parts necessary for the pump's assembly. Ensure all machined surfaces are free of nicks and burrs and corrosion. Ensure all parts are wiped clean of preservatives and packaging debris, especially the anti-friction bearings. Ensure all 'O'-rings and lip seals are undamaged.

3. Ensure the proper tools for assembly are at hand. No "special" tools are required. All proper tools required are commercially available. Below is a short list of some tools required.

   - Thermostatically controlled bearing heater
   - Pyrometer
   - Dry ice or a bearing refrigerator
   - Asbestos protective gloves
   - Proper sized hook spanner wrench for bearing locknut.

4. Apply a light film of oil to the shaft to facilitate installation of bearings and seals. Take care not to scratch or otherwise damage the fine machined surfaces.

5. Press the lip seal into the cylindrical roller bearing hub and place an 'O' ring around it.

6. Cool the cylindrical roller bearing to -5°C (23°F) and then press it into the hub.

7. Slide the rubber flinger (Dia 101.3 mm) onto the shaft from the top end until it comes to rest against the rubberized portion of the shaft in the case of the DFC model and to approximately 4" below the inner race shoulder in the case of the DEC model.

8. Heat the inner race of the bottom cylindrical roller bearing to approximately 66°C (150°F) above ambient temperature or until sufficient clearance exists between the I.D. of the inner race and the O.D. of the shaft. Slide the inner race on over the top of the shaft down to its shoulder

9. Slide the cylindrical roller bearing hub from the top of the shaft down onto the inner race and secure.

10. Push the shaft from the bottom end up through the bearing housing so that the top of the rubberized portion, in the case of the DFC, rests against the radial bearing hub so exposing the top end of the shaft.

11. Heat the top angular contact bearings to about 66°C (150°F) above ambient temperature or until sufficient clearance exists between the inner race I.D. and the shaft O.D. to allow assembly. Use a proper bearing heating device such as an oven or heating ring. Do not scratch the race or apply a direct flame to it.

12. Slide both bearings on over the top of the shaft until they seat firmly against the shoulder of the shaft and against each other. Apply slight pressure on the inner race of the top bearing to ensure it is snug against the lower bearing as cooling begins. Hold for about one minute.

13. Install the thrust bearing lockwasher and locknut onto the shaft against the thrust bearings, only hand tight. Allow the bearings to cool to ambient temperature.

14. Tighten the bearing locknut using a properly sized hook spanner wrench. Fold a tab of the lockwasher over, to lock the nut in place.

15. Install the thrust bearing cover O-ring and the oil seal for the top bearings. Pack the bearings well with a suitable grease. In most cases our factory will use Shell Alvania R3 grease based on lithium 12 hydroxy stearate soap, or equivalent.

16. Install the top bearing cap and bolt to the bearing housing. Charge the bearings fully with grease through the top grease nipple.

17. Ensure that the brass air plug in the bearing housing is loose to allow air to escape when the bottom cap nuts are tightened and when the bottom bearing is fully charged with grease through the bottom grease nipple. Insert rubber flinger.

18. Bolt the bearing housing assembly onto the baseplate.

19. Slide the support column over the bottom of the shaft and bolt to the baseplate.

20. Bolt the casing onto the bottom of the support column.

21. Slide the impeller onto the shaft and install the key. Secure with the impeller lock fitting.

22. Connect the delivery pipe to the discharge flange and to the baseplate.

23. On models with the agitator; install the agitator on to the shaft using a good thread lubricant to facilitate removal. Do not impact the agitator.

23. Install the motor support plate, motor, V-belt drive, belts and guard.

24. Install pump back into sump.

section VI- RECOMMENDED SPARE PARTS

To ensure against possible long and costly downtime periods, especially on critical services, it is advisable to have spare parts on hand. A list of spare parts is found in the parts list. Repair orders will be handled with a minimum of delay if the following directions are followed:

1. Give model number and serial number. These can be obtained from the nameplate on the pump.

2. Write plainly the name and part number of each part required. These names and numbers should agree with those on the sectional drawings.

3. Give the number of parts required.

4. Give complete shipping instructions.

Some parts have long life and therefore do not have to be carried in stock. These items should be checked at regular intervals and when replacement is indicated the parts should be ordered.

For each particular pump model refer to the corresponding spare parts list. This list indicates what are considered to be the recommended and critical parts for that pump.

TOYO PUMPS

The Innovators

VERTICAL RECESSED IMPELLER PUMPS

TYPE DEC 81-80

PERFORMANCE CURVES

DISCHARGE 80 MM (3")	IMPELLER 336 MM (13.2")	DATE 3 JAN 1990
SUCTION 100 MM (4")	SOLID 72 MM (2.8")	NUMBER 1101

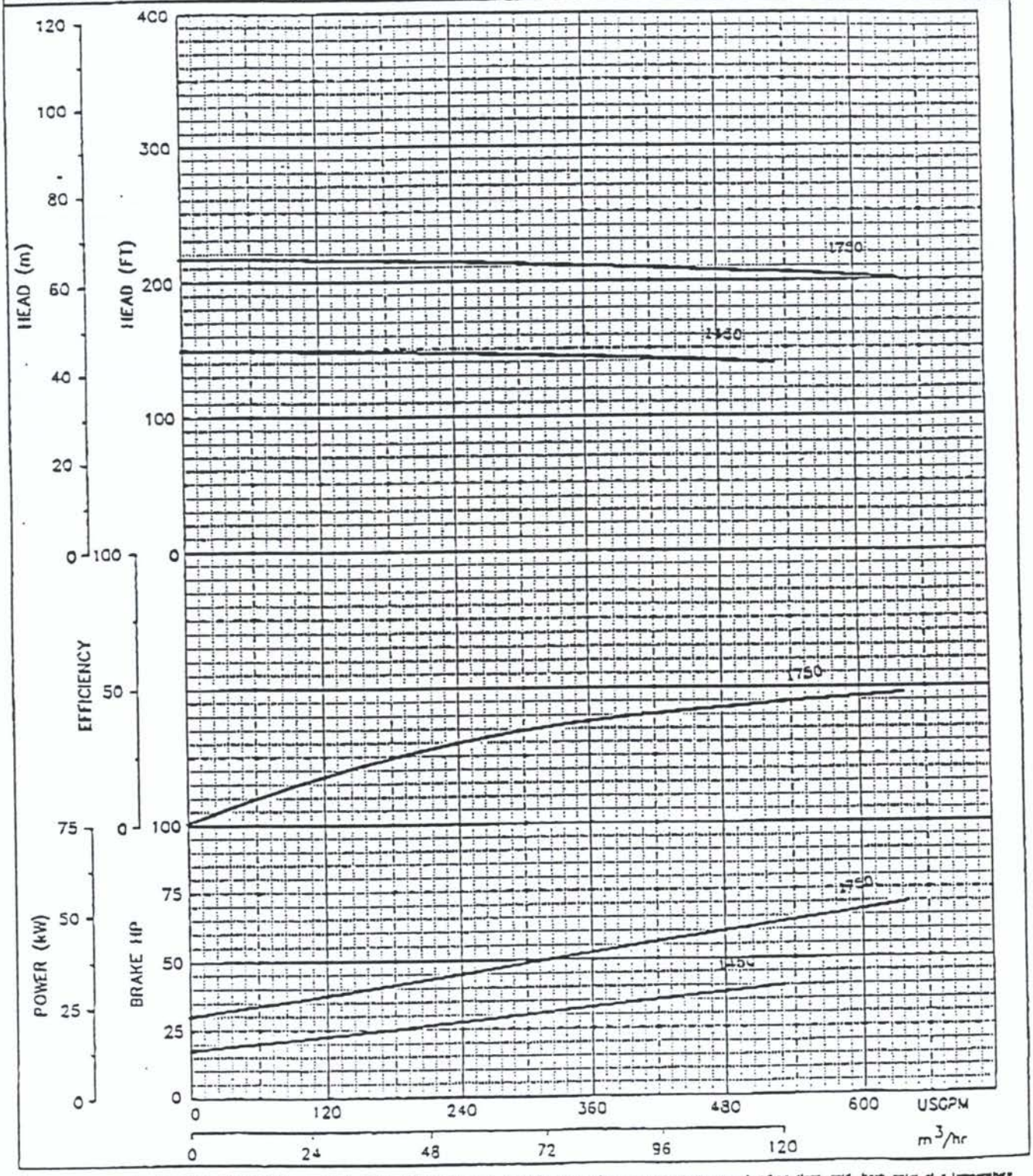

Curves are approximate. Pump is guaranteed for one set of conditions. Capacity, head, and efficiency are based on shop tests when handling clear, cold, fresh water at a temperature of not over 85 degrees and not over 15' suction lift.

TOYO PUMPS

The Innovators

RECESSED IMPELLER PUMPS

TYPE DEC — CROSS SECTIONAL DRAWING

'E' BEARING HOUSING UP 61-100 TO AND INCL. 81-150 WITH AGITATOR

DE3024

PART NO.	Item Part	QTY	DESCRIPTION
101		1	PUMP CASING
104		1	DELIVERY COVER
110	OR	1	O-RING - CASE TO DELIVERY COVER
151	SM		STUDS
152	NM		HEX NUT
161	RM		HEX HEAD CAPSCREW
162	NM		HEX NUT
164	RG	1	GASKET
201		1	SHAFT
202		1	IMPELLER
203		1	IMPELLER KEY
205		1	IMPELLER COLLAR
206		1	IMPELLER NUT
207		1	CUTTER FAN
210	V	1	V-RING
211	V	1	V-RING
213	KEY	1	KEY
301		1	RADIAL BEARING HUB
302	NU	1	CYLINDRICAL ROLLER BEARING
303	N	1	INTERNAL RETAINING RING
304	LS	1	LIP SEAL BOTTOM BEARING
305	CM	4	SOCKET HEAD CAPSCREWS
306	OR	1	O-RING
311		1	THRUST BEARING HUB
312		2	ANGULAR CONTACT THRUST BEARING
313	MB	1	LOCKWASHER - THRUST BEARING
314	KM	1	LOCKNUT - THRUST BEARING
315		1	THRUST BEARING END COVER
316	LS	1	LIP SEAL-TOP BEARING UPPER SEAL
317	RM	6	HEX HEAD CAPSCREWS
318		1	O-RING
319	GN	2	GREASE FITTINGS 1/8 NPT
320		1	PRESSURE RELIEF FITTING 1/8 NPT
331		1	BEARING HOUSING MODEL 'E'
351	RM	8	HEX HEAD CAPSCREWS
352	NM	8	HEX NUTS
355	RM	4	HEX HEAD CAPSCREWS
356	NM	4	HEX NUTS
360	LS	1	LIP SEAL TOP BEARING LOWER SEAL
362		1	O-RING
401		1	BASEPLATE
501		1	SUPPORT COLUMN
601		1	BEND ASSEMBLY
611		1	DISCHARGE PIPE ASSEMBLY
651	RM		HEX HEAD CAPSCREW
652	NM		HEX NUT
654	RG	1	GASKET
655	RM	2	HEX HEAD CAPSCREWS
656	NM	2	HEX NUTS
801		1	SUCTION STRAINER ASSEMBLY
851	SM	4	STUDS
852	NM	4	HEX NUTS
910		1set	SHIM PACK
OPTIONAL PARTS			
121		1	WEAR RING
122		1	O-RING CASE TO WEAR RING

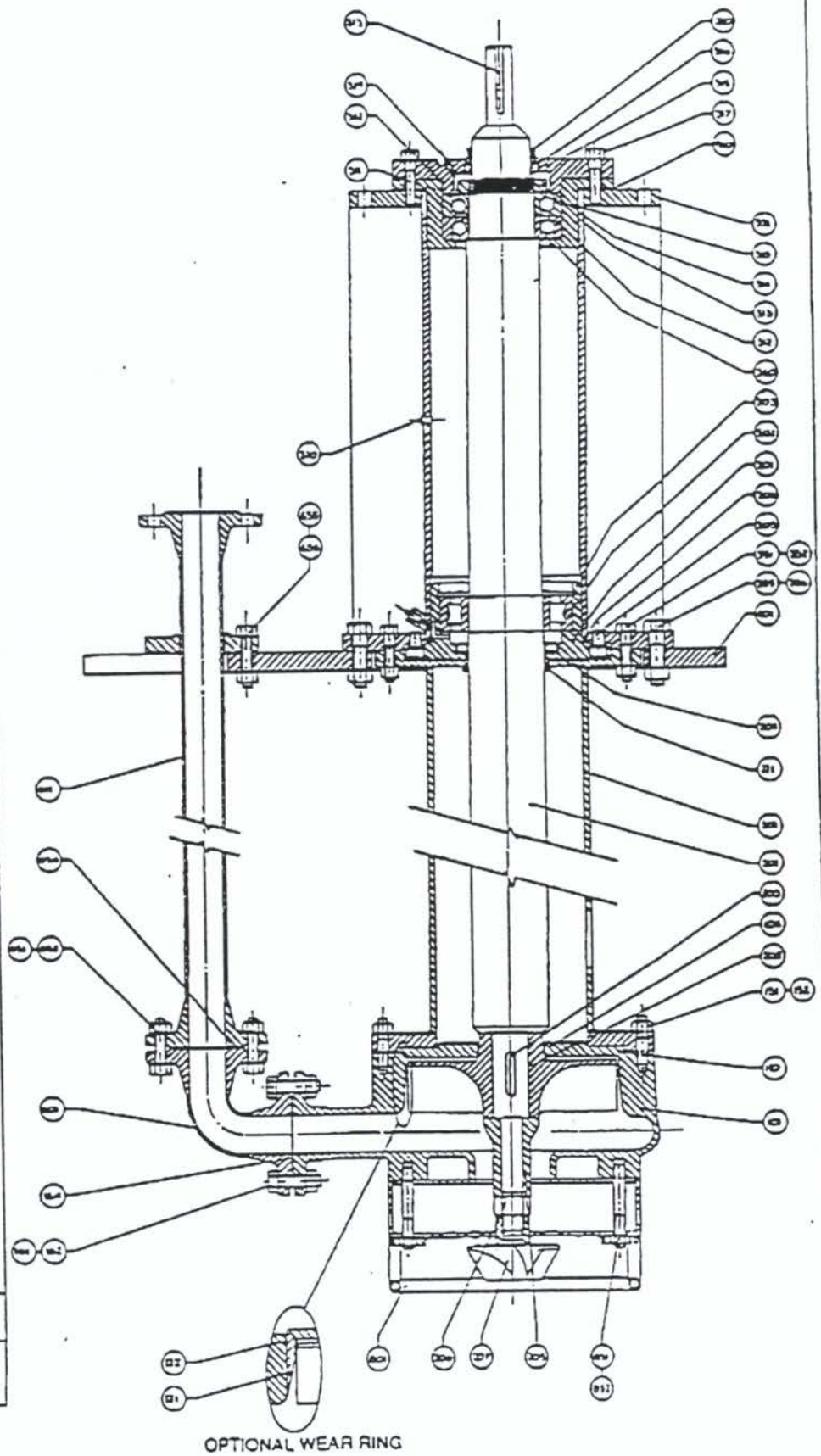

OPTIONAL WEAR RING

TOYO PUMPS

RECESSED IMPELLER PUMPS

TYPE DEC

'E' BEARING HOUSING W OR W/O AGITATOR

DIMENSIONAL DRAWING

DE5014 PAGE 1 OF 2

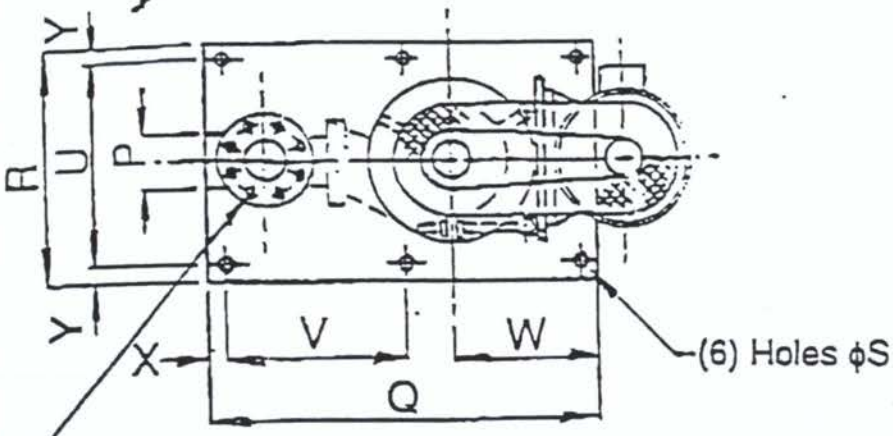

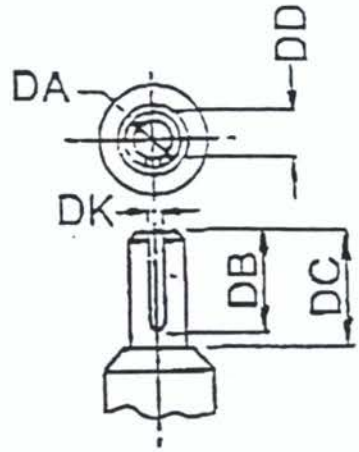

Pump Shaft End Detail

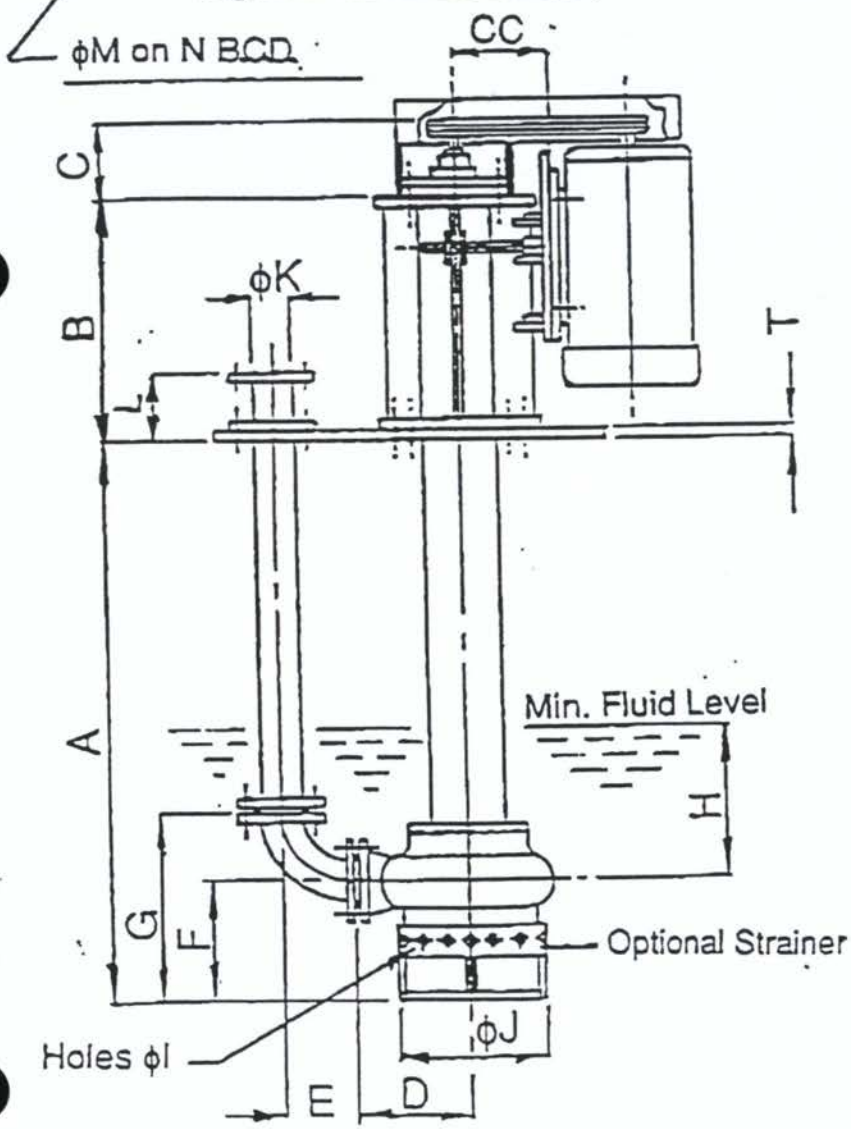

TOYO PUMPS

The Innovators

RECESSED IMPELLER PUMPS

TYPE DEC

'E' BEARING HOUSING W OR W/O AGITATOR

DIMENSIONAL DRAWING

DE5014 PAGE 2 OF 2

Table A - PUMP DIMENSIONS

	61-100	71-50	71-80	71-100	81- 80	81-150	91-100
A	1219 1524 1829	1219 1524 1829	1219 1524 1829	1219 1524 1829	1219 1524 1829	1219 1524 1829	1219 1524 1829
B	635.4	635.4	635.4	635.4	635.4	635.4	635.4
C	189	189	189	189	189	189	189
CC	273	273	273	273	273	273	273
D	300	300	340	360	355	440	430
DA	1.5"	1.5"	1.5"	1.5"	1.875"	1.875"	1.875"
DB	90	90	90	90	90	90	90
DC	104	104	104	104	104	104	104
DD	1.289"	1.289"	1.289"	1.289"	1.591"	1.591"	1.591"
DK	.375	.375	.375	.375	.5	.5	.5
E	177.8	114.3	146	177.8	146	241.3	177.8
F	255	212.5	245	255	318.6	353.6	255
G	432.8	326.8	391	432.8	464.6	594.9	432.8
H	200	200	220	220	250	250	250
ϕI	45	20	35	45	65	65	45
ϕJ	364	340	364	398	525	525	398
ϕK	100	50	80	100	80	150	100
L	203.2	225.4	238.8	203.2	312.4	203.2	203.2
ϕM	20	20	20	20	20	23	20
N	190.5	120.6	152.4	190.5	152.4	241.3	190.5
P	175	120	120	175	120	175	175
Q	1219	914.4	914.4	1219	1219	1219	1219
R	914.4	610	610	914.4	914.4	914.4	914.4
ϕS	18	18	18	18	18	18	18
T	25.4	25.4	25.4	25.4	25.4	25.4	25.4
U	838.2	533.4	533.4	838.2	838.2	838.2	838.2
V	571.5	419	419	571.5	571.5	571.5	571.5
W	381	295	295	381	381	381	381
X	38.1	38.1	38.1	38.1	38.1	38.1	38.1
Y	38.1	38.1	38.1	38.1	38.1	38.1	38.1

Table B - NOZZLE LOADS

	71-50	71-80 81-80	61-100 71-100 91-100	81-150
F_x	80	140	160	180
F_y	50	90	100	175
F_z	65	115	130	230
M_x	170	230	320	560
M_y	130	175	240	430
M_z	85	116	160	290

Force = F in lbs
Moment = M in lb-ft

x = in line with pump shaft
y = vertical
z = perpendicular to x

Dimensions in mm except as noted

PARTS LIST FOR DEC 81-80-4E-72

** CRITICAL SPARES
* RECOMMENDED SPARES

	ITEM#	PART #	DESCRIPTION	QTY	PRICE
	201.0	81-80/201M	MODULAR SHAFT	1	1,712.50
*	202.0	815002-12LB4V	IMPELLER	1	2,125.00
**	203.0	KEY/14X9X90	IMPELLER KEY	1	16.00
*	205.0	81-80/205	IMPELLER COLLAR	1	234.00
*	206.0	NM-2702SS	NUTS SS	1	23.43
**	207.0	E3-499	CUTTER FAN	1	263.24
*	101.0	815001-020012	CASING HIGH CHROME	1	6,300.00
*	104.0	81-150/11-HC	DELIVERY COVER	1	1,326.00
**	110.0	OR.125X13.75	O-RING DELIVERY COVER	1	9.60
	151.0	SM-1660SS	STUD BOLTS	12	17.68
	152.0	NM-1602SS	NUTS	12	11.94
	161.0	RM-1670SS	BOLTS	4	5.19
	162.0	NM-1602SS	NUTS	4	11.94
	501.0	81-80/501-72M	SUPPORT COLUMN	1	1,666.00
	551.0	RM-1425SS	BOLTS	4	0.68
	552.0	NM-1402SS	NUTS	4	2.18
	601.0	DB3-CS	BEND	1	29.64
*	654.0	RG-3	GASKET	1	1.78
*	164.0	RG-3	GASKET	1	1.78
	611.0	DP3X70	DISCHARGE PIPE	1	465.00
	651.0	RM-1665SS	BOLTS	4	18.77
	652.0	NM-1602SS	NUTS	4	11.94
	655.0	RM-1016	BOLTS	2	0.45
	811.0	81-80/811	STRAINER	1	975.00
*	811.4	81-80/811.4	STRAINER PLATE	1	138.00

PRICES SUBJECT TO CHANGE WITHOUT NOTICE

MARCH 1990

E" STYLE BEARING HOUSING PARTS LIST

ITEM #	PART #	DISCRIPTION		PRICE CDN EA.	QUANTITY
302	NU2220E	BEARING -RADIAL	*	249.75	1
312	7218GPUA	BEARING -THRUST	*	230.77	1
331	BHC/E1053	BEARING HOUSING MODEL	*	1710.10	1
301	160DC51	RADIAL BEARING HUB		338.20	1
318/306	P-5200	O-RING	*	10.57	2
314	KM18	LOCK NUT		26.11	1
305	CM-1630	SOCKET HEAD CAP SCREW		1.23	4
303	RR180X4	INTERNAL RETAINING RING	*	45.26	1
315	160DC37A	THRUST BEARING COVER		285.00	1
311	160DC37B	THRUST BEARING HUB		285.64	1
317	RM-1660	BOLTS		1.05	4
211	V100S	FLINGER-FORSHEDA V-RING	*	25.37	1
210	V80S	FLINGER-FORSHEDA V-RING	*	20.65	1
304	LS100X140X13	OIL SEAL	*	31.53	1
316	LS80X100X13	OIL SEAL	*	17.03	1
313	MB18	LOCK WASHER		3.70	1
319	GN.125	GREASE NIPPLE		.90	2
320	PRFIT.125	PRESSURE RELIEF FITTING		17.27	1
355	RM-2090	BOLTS		2.37	4
356	NM-2002	NUTS		0.98	4
351	RM-1480	BOLTS		1.50	8
352	NM-1402	NUTS		.20	8

* CRITICAL SPARE PARTS

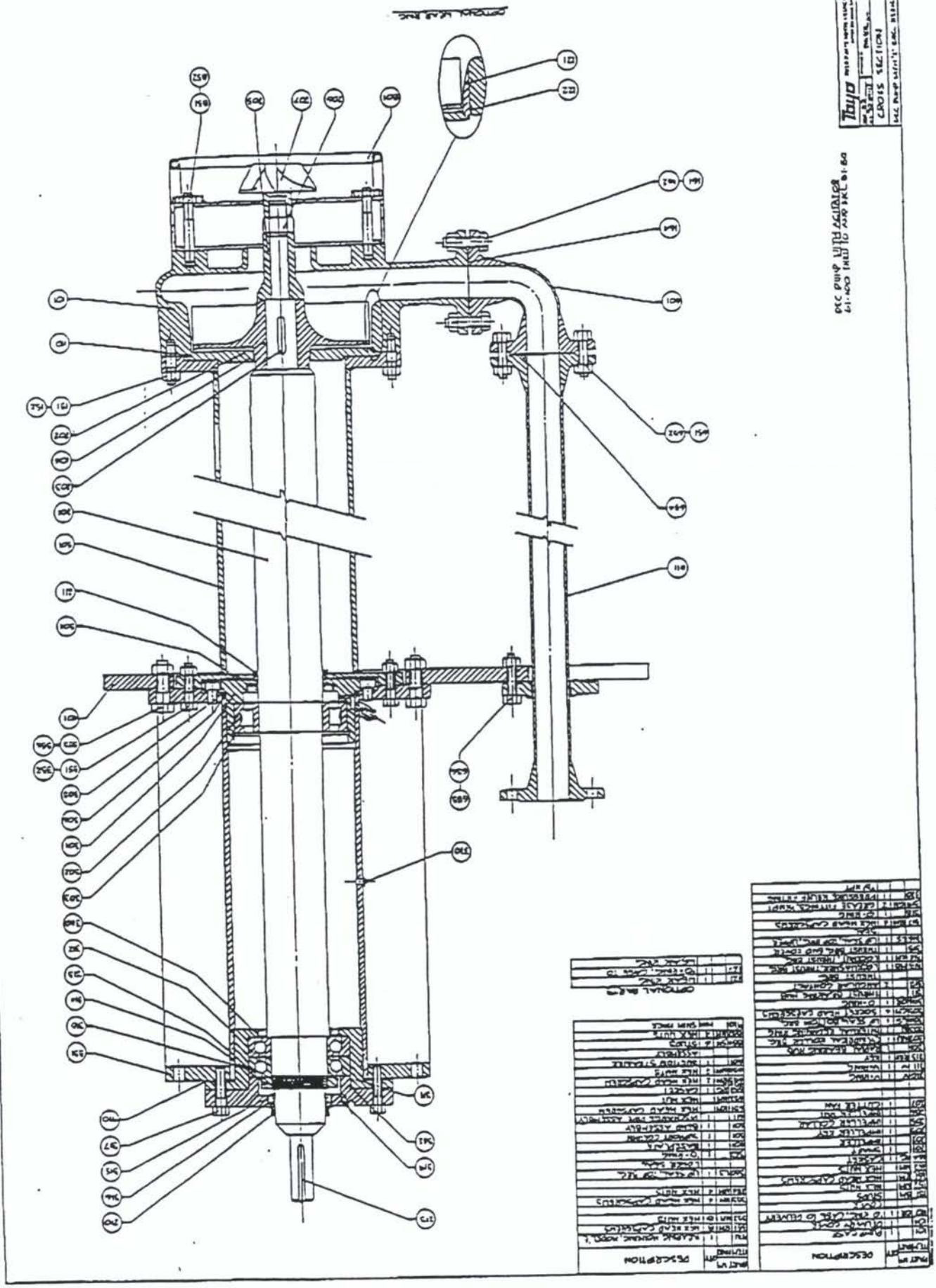
CROSS SECTION
OPTIONAL BARS
DESCRIPTION

FMC POCATELLO

EQUIPMENT NUMBER CHECK SHEET

EQUIP.NO.: 62-X048F DATE ASSIGNED: 11-28-95 MECH.ENG: RS ARMSTRONG
PROJ.SUPER: LG PLOOSTER ELEC.ENG: DW ZEITNER

1. ITEM DESCRIPTION - FURNACE WASTEWATER COLLECTION SUMP OFF-GAS BLOWER.

2. ITEMS INVOLVED IN EQUIP.NO.- PRESSURE BLOWER
20HP, 3600RPM, 230/460V, 3Ø, TEFC, 256T MOTO
UNITARY BASE W/SPRING ISOLATORS.

3. ITEM TAG NO.- F-X400

4. MANUFACTURER- NEW YORK BLOWER
MODEL NO. - 2110S PRESSURE BLOWER

5. DOCUMENTATION & MANUALS- ATTACHED

6. SPARE PART LIST - NONE
STORES LETTERS - NONE

7. DRAWING LIST - 395089 395184 CABLE SCHEDULE
395087 395560 CONDUIT "
395088 395567

8. PURCHASE ORDERS - 9522502C
EQUIPMENT COSTS - $2910
VENDOR DATA - ATTACHED

9. SPECIFICATIONS NEEDED - 2500 CFM @ 25" H_2O STATIC PRESSURE
20HP, 3600 RPM, 230/460 VOLT, 3Ø TEFC MOTOR

10. MAINTENANCE FILES AND RECORDS DATA: DATE COMPLETE- 3-27-96

11. PROPERTY ITEM CARDS IDENTIFIED -

12. CAPITAL AFE NO.- C94-20:025

C94-20 CONDUIT SCHEDULE

DATE: 12/1/95

CONDUIT #	CONDUIT SIZE	EQUIPMENT AND INSTRUMENT		INCLUDED CABLES	REFERENCE DRAWINGS	REMARKS
		FROM	TO			
C1151-95	1"	F-1400 MCC "F13" UNIT 4AN	F-1400	1501, 1502 1503-95	395560 52100	
C1152-95	1"	F-2400 MCC "F24" UNIT 2JF	F-2400	1504, 1505 1506-95	395560 52101	
C1153-95	1"	F-3400 MCC "F34" UNIT 1JF	F-3400	1507, 1508 1509-95	395567 52102	
C1154-95	1"	F4400 MCC "F42" UNIT 3HR	F-4400	1510, 1511 1512-95	395568 52103	

C94-20 CABLE SCHEDULE

DA 12/1/95

CKT #	# CABLES	CABLE TYPE	EQUIPMENT AND INSTRUMENT		REF DWGS	ROUTE	REMARKS	APPROX. LENGTH
			FROM	TO				
1501-95	2-1/C	#14 THHN	F-1400 MCC "F13" UNIT 4AN	PS-1400 PI-1400	395560 52100	C1151-95	F-1400 Loss of Vacuum Ind.	
1502-95	4-1/C	#14 THHN	F-1400 MCC "F13" UNIT 4AN	F-1400 Local S/S	395560	C1151-95	F-1400 Start/Stop	
1503-95	4-1/C	#8 THHN	F-1400 MCC "F13" UNIT 4AN	F-1400 Motor	395560	C1151-95	F-1400 Motor Wiring	
1504-95	2-1/C	#14 THHN	F-2400 MCC "F24" UNIT 2JF	PS-2400 PI-2400	395560 52101	C1152-95	F-2400 Loss of Vacuum Ind.	
1505-95	4-1/C	#14 THHN	F-2400 MCC "F24" UNIT 2JF	F-2400 Local S/S	395560	C1152-95	F-2400 Start/Stop	
1506-95	4-1/C	#8 THHN	F-2400 MCC "F24" UNIT 2JF	F-2400 Motor	395560	C1152-95	F-2400 Motor Wiring	
1507-95	2-1/C	#14 THHN	F-3400 MCC "F34" UNIT 1JF	PS-3400 PI-3400	395567 52102	C1153-95	F-3400 Loss of Vacuum Ind.	
1508-95	4-1/C	#14 THHN	F-3400 MCC "F34" UNIT 1JF	F-3400 Local S/S	395567	C1153-95	F-3400 Start/Stop	
1509-95	4-1/C	#8 THHN	F-3400 MCC "F34" UNIT 1JF	F-3400 Motor	395567	C1153-95	F-3400 Motor Wiring	
1510-95	2-1/C	#14 THHN	F-4400 MCC "F42" UNIT 3HR	PS-4400 PI-4400	395567 52103	C1154-95	F-4400 Loss of Vacuum Ind.	
1511-95	4-1/C	#14 THHN	F-4400 MCC "F42" UNIT 3HR	F-4400 Local S/S	395567	C1154-95	F-4400 Start/Stop	
1512-95	4-1/C	#8 THHN	F-4400 MCC "F42" UNIT 3HR	F-4400 Motor	395567	C1154-95	F-4400 Motor Wiring	

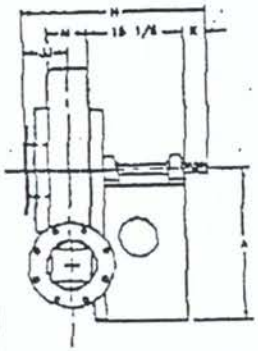

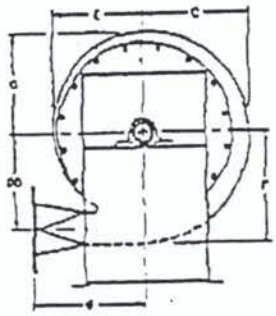

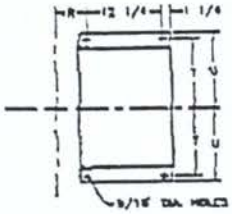

PRESSURE BLOWERS ARE ROTATABLE IN THE FIELD.

FURNISHED WITH FLANGED OUTLET WHICH FITS ANSI 150 PIPE FLANGES.

MAXIMUM TEMPERATURE:
ALUMINUM WHEEL (STD.) ---200°F
STEEL WHEEL ----------300°F
HEAT FAN ----------800°F

Accessories

Items checked are to be furnished.

- ____ FLANGED INLET. Fits ANSI 150 pipe flanges.
- ____ VENTURI INLET, with guard.
- ____ PLAIN PIPE INLET.
- ____ STEEL WHEEL.
- ____ DRAIN, 1" tank flange (less plug).
- ____ WAFER OUTLET DAMPER, TYPE BW, per drawing _____.
- ____ WAFER OUTLET DAMPER, TYPE BL, per drawing _____.
- ____ FLEXIBLE CONNECTOR, per drawing _____.
- ____ INLET FILTER, per drawing _____.
- ____ ISOLATION, per drawing _____.
- ____ _____ TYPE SPARK RESISTANT CONSTRUCTION.
- ____ SHAFT SEAL, CERAMIC FELT.
- ____ 301°F thru 800°F HEAT FAN (steel wheel, shaft cooler, guard, and high-temp. paint).
- ____ NOMINALLY AIR TIGHT CONSTRUCTION (solid drive side, shaft seal, neoprene inlet plate gasket). Blower not rotatable in the field.
- ____ BELT GUARD, per drawing _____.
- ____ SHAFT GUARD.
- ____ UNITARY BASE, per drawing _____.
- ____ FLUSH BOLTED CLEANOUT DOOR, located at _____ O'clock.
- ____ SILENCER, per drawing _____.

FOR SALES PURPOSES ONLY
This drawing has not been certified!

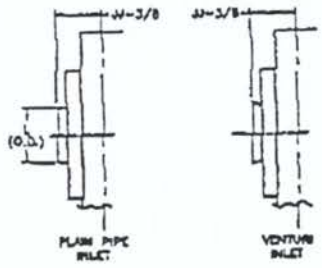

FAN DISCHARGES – VIEWED FROM DRIVE SIDE

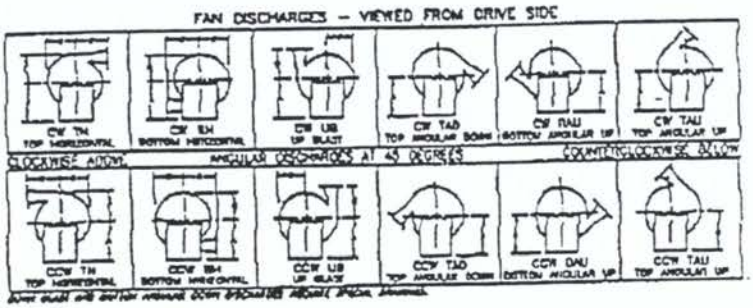

TOLERANCE: ± 1/8"

DIMENSIONS (IN INCHES)

WHEEL DIAMETER	A	C	DD	E	F	G	K	T	U	SHAFT DIAMETER	SQUARE KEY
14 THRU 18	19 1/2	13 3/8	11 3/4	12	14 3/8	12 3/4	3	9 1/8	10	1 7/16	3/8
19 THRU 22	23 3/8	16 1/2	14 7/8	14 1/2	17 1/2	15 1/2	4	10 7/8	11 3/4	1 7/16	3/8
23 THRU 28	28 3/8	19 1/2	17 3/8	17 1/8	20 3/8	18 1/4	5	10 7/8	11 3/4	1 11/16	3/8

WHEEL DIAMETER	OUTLET DIA.	B	H	JJ	L	M	R	FLANGES (I.D.) OUTLET	FLANGES (I.D.) INLET
14 THRU 18	4	18 1/4	25 3/8	5 3/8	6 3/8	3 7/8	3 3/8	4	6
	6	18 1/4	28	8 3/4	8 3/8	4 1/4	4 1/2	6	8
15 THRU 18	8	18 1/4	28	8 3/4	8 3/8	6 1/4	4 1/2	8	8
18 THRU 22	4	17 3/4	27 1/8	8 1/8	8 3/8	3 7/8	3 3/8	4	6
	6	17 3/4	27 1/8	8 1/8	8 3/8	3 7/8	3 3/8	6	8
	8	17 3/4	29	8 3/4	8 3/8	6 1/4	4 1/2	8	8
	10	21 3/4	29	8 3/4	8 6/8	4 1/4	4 1/2	10	10
23 THRU 28	8	19	29 3/8	7	8 3/8	3	3 7/8	8	8
	8	19	29 3/8	7	8 3/8	6	3 7/8	8	8
	10	23	31	7 1/4	10 3/4	7 1/4	5	10	10
	12	23	31	7 1/4	10 3/4	7 1/4	5	12	12

FLANGE DIMENSIONS (OUTLET–INLET) I.D.	B.C.	O.D.	HOLES* NO.	HOLES* DIA.
4	7 1/2	9	8	3/4
6	9 1/2	11	8	7/8
8	11 3/4	13 1/2	8	7/8
10	14 1/4	16	12	1
12	17	19	12	1

*HOLES STRADDLE THE CENTERLINES

21" WHEEL DIA.

DIMENSIONS SHOULD NOT BE USED FOR CONSTRUCTION PURPOSES UNLESS CERTIFIED.

DATE _____ CERTIFIED _____ CONTROL NO. _____

CUSTOMER'S NO. _____
CUSTOMER'S NAME _____
TAG _____

MOTOR BY _____ MTG. BY _____ DRIVE BY _____

* SIZE NOMENCLATURE (5 DIGITS)
FIRST & SECOND = Wheel Dia.
THIRD & FOURTH = Wheel P.A. (I.D.)
FIFTH (LETTER) = Wheel Type
A = Airfoil
S = Sling or Tubular Shell

FAN DATA

SIZE*	QTY.	DISCHARGE	CFM	SP	BHP	°F	RPM

MOTOR DATA

POS.	RPM	HP	ELECTRICAL DATA	FRAME

DRIVE DATA

BELTS	DRIVER	DRIVEN	CENTERS

CERTIFIED DRAWING | FORM NO. B-1 Q

nyb The New York Blower Company

PRESSURE BLOWER
ARRANGEMENT 1
SIZES 14 THRU 28

DRAWING NUMBER
FILE _____ DWG. _____

BULLETIN 451
JANUARY, 1990

PRESSURE BLOWERS

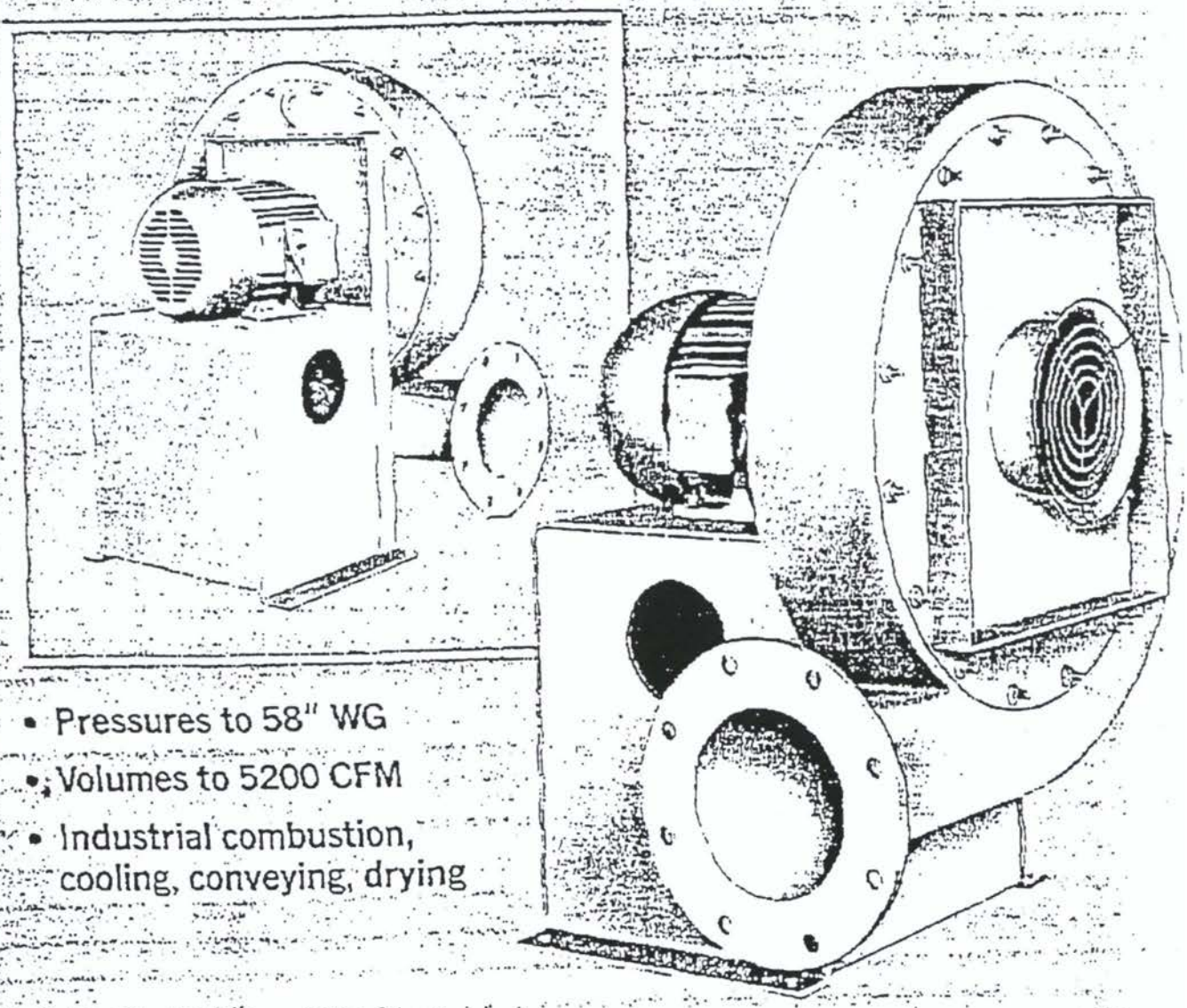

- Pressures to 58" WG
- Volumes to 5200 CFM
- Industrial combustion, cooling, conveying, drying

nyb The New York Blower Company

7660 QUINCY STREET—WILLOWBROOK, ILLINOIS 60521-5596

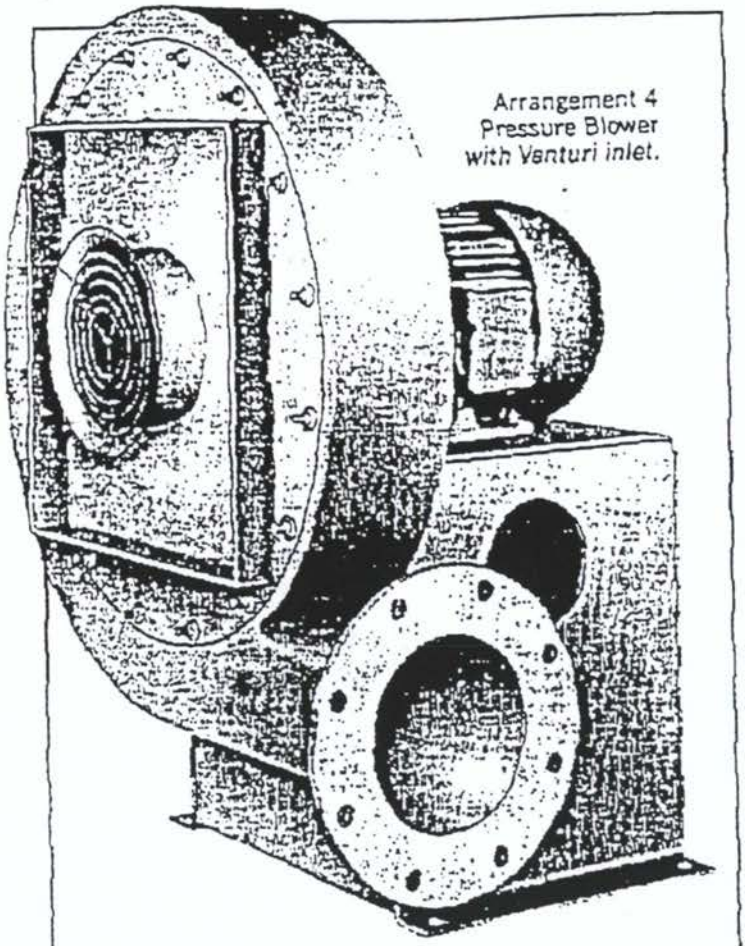

Arrangement 4
Pressure Blower
with Venturi inlet.

DESIGN FEATURES

- Efficiency . . . advanced wheel and aerodynamic housing design combine for air-handling efficiency superior to conventional radial wheel designs.
- *Lower sound levels . . . the dual-taper design offers* sound levels markedly lower and less irritating than *conventional radial designs . . .* sound power ratings are available upon request.
- Stable performance . . . the pressure curve remains stable from wide open to closed off . . . fan instability, or pulsation, is eliminated even when "turndown" approaches zero flow.
- Wide performance range . . . choice of 13 wheel diameters and five outlet sizes enables efficient fan selection across a broad range of volumes and pressures.
- Versatility . . . various accessories, modifications, *alloys, and arrangements are available.*
- Wide application range . . . designed for continuous operation in combustion, cooling, conveying, drying, and various process systems.

PRESSURE BLOWERS . . .

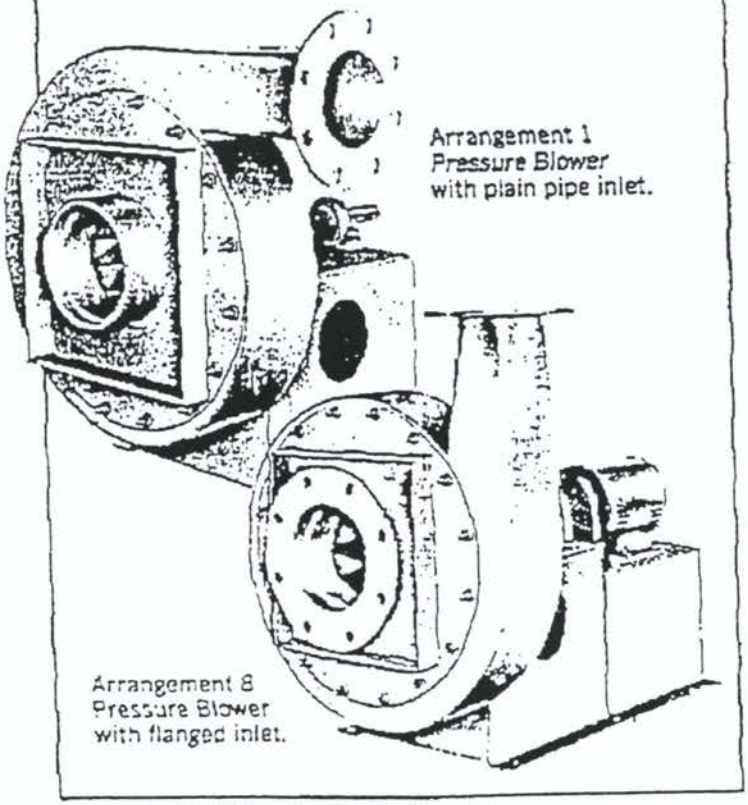

Arrangement 1
Pressure Blower
with plain pipe inlet.

Arrangement 8
Pressure Blower
with flanged inlet.

CONSTRUCTION FEATURES

All-welded steel housings—heavy-gauge housings are rigidly braced to prevent "drumming" at high pressures ...rotatable to any of the standard discharge positions shown on page 11...standard housings and steel and stainless steel wheels are reversible, aluminum wheels are not.

Lifting eyes—standard on all units for easy of handling and installation.

Outlet flanges—continuously welded flanges match ANSI Class 125/150 hole pattern.

Inlet connections—a choice of inlet types enables the units to be tailored to specific applications. Venturi provides *streamlined flow* for open inlet applications... standard with wire guard. Plain pipe is ideal for flexible sleeve connection...also see page 4. Flanged inlet is continuously welded...recommended *for gasketed* duct connection and required for the inlet filters described on page 4.

© Copyright 1984, 1990 by The New York Blower Company

STANDARD ALUMINUM WHEEL

The unique Pressure Blower wheel is designed *to provide efficient performance and reduced* sound levels . . . the dual-taper design concept yields typical efficiencies up to 10 percentage points greater than conventional straight radial wheels. Riveted high-strength aluminum alloy blades and side plates minimize overhung wheel weight and starting inertia. Ductile-iron, taper-lock hubs make wheels easily removable. Welded steel and stainless steel wheels are also available . . . see page 4.

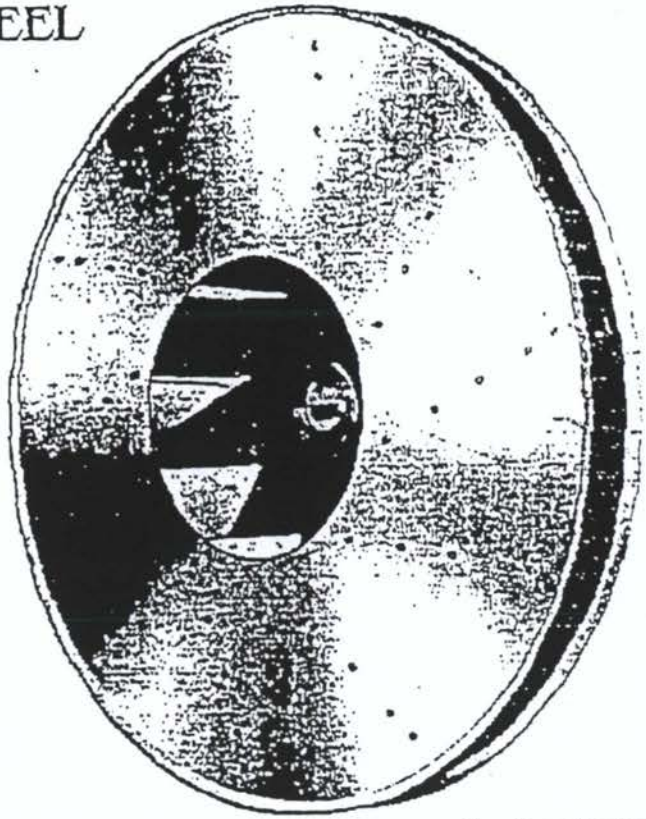

Standard aluminum wheel.

AMCA air performance—The New York Blower Company certifies that the Pressure Blowers shown herein are licensed to bear the AMCA Seal. The ratings shown are based on tests made in accordance with AMCA Standard 210 and comply with the requirements of the AMCA Certified Ratings Program.

FOR PROCESS SYSTEMS

ARRANGEMENTS

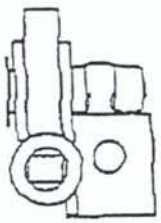

ARRANGEMENT 4

A compact direct-drive unit with a minimum number of moving parts for ease of maintenance. Wheel is mounted directly on motor shaft.

Maximum airstream temperature: 180°F.

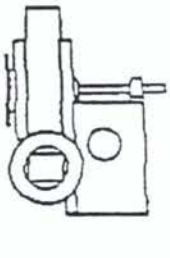

ARRANGEMENT 1

Recommended for belt-driven applications only. Wheel is mounted *on shaft mounted in heavy-duty* bearings.

Maximum airstream temperature:
200°F.—aluminum wheel.
300°F.—steel wheel.
600°F.—heat fan.

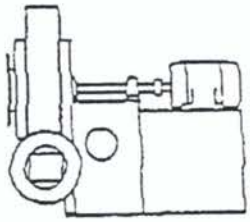

ARRANGEMENT 8

Direct-drive arrangement similar to Arrangement 1, but with integral *motor pedestal . . . fan shaft is con*nected to the motor shaft with a flexible coupling.

Maximum airstream temperature:
200°F.—aluminum wheel.
300°F.—steel wheel.
600°F.—heat fan.

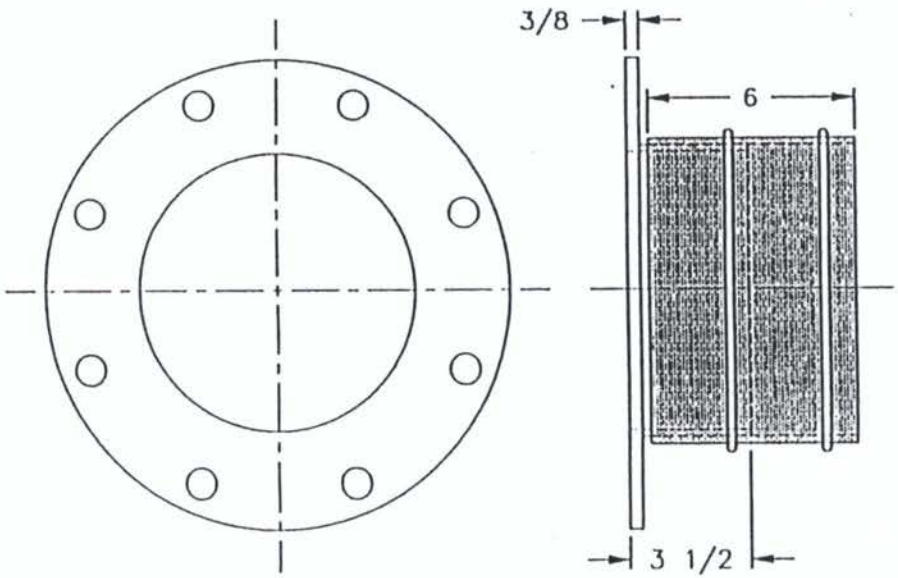

FLANGE FITS ANSI 150 PIPE FLANGES.

FLEXIBLE NEOPRENE SLEEVE HELD ON STUB PIPE AND STANDARD 4, 6, 8, 10, OR 12 INCH PIPE OF SYSTEM WITH WORM DRIVE ADJUSTABLE HOSE CLAMPS.

SLEEVE DIMENSIONS

SIZE	I.D.
4	4 1/2
~~6~~	~~6 5/8~~
8	8 5/8
~~10~~	~~10 3/4~~
12	12 3/4

FLANGE DIMENSIONS

SIZE	I.D.	B.C.	O.D.	HOLES NO. & SIZE
4	4	7 1/2	9	8 – 3/4
~~6~~	~~6~~	~~9 1/2~~	~~11~~	~~8 – 7/8~~
8	8	11 3/4	13 1/2	8 – 7/8
~~10~~	~~10~~	~~14 1/4~~	~~16~~	~~12 – 1~~
12	12	17	19	12 – 1

TOLERANCE: ± 1/8"

DIMENSIONS SHOULD NOT BE USED FOR CONSTRUCTION PURPOSES UNLESS CERTIFIED.

DATE 01-09-96 CERTIFIED lkm kw CONTROL NO. 100
CUSTOMER'S NO. 9522502-C
TAG

SIZE	FAN SIZE	QTY.
8		8

CERTIFIED DRAWING | FORM NO. B-6 L

nyb The New York Blower Company
7660 Quincy Street
Willowbrook, IL 60521

FLEXIBLE CONNECTOR FOR PRESSURE BLOWERS

DRAWING NUMBER
FILE N00129-100-1

FMC CORP

PURCHASE ORDER : 9522502-C

TAG : F-1400

FAN INFORMATION

QUANTITY : 1
FAN TYPE : Pressure Blower - ST
FAN SIZE : 2110S
FAN CLASS : NONE
ROTATION : CCW
DISCHARGE : TAU
ARRANGEMENT : 1
INLET TYPE : FLANGED

MOTOR INFORMATION

ENCLOSURE : TEFC
HORSEPOWER : 20
RPM : 3500
ELECT. DATA : 3-60-230/460
FRAME SIZE : 256T
MOTOR POS : Z
MOTOR BY : NYB
MOUNT BY : NYB

FAN PERFORMANCE DATA

MAX SAFE SPEED : 3900 RPM at 70 Deg.

CAP	TYPE	CFM	SP	RPM	BHP	TEMP	ALT	DENSITY
2	OPER	2500.0	25.00	3405	15.20	70	5000.0	0.0625

DRIVE INFORMATION

DRIVE S.F. : 1.3
FAN SHV QTY : 1
FAN BSH QTY : 1
MTR SHV QTY : 1
MTR BSH QTY : 1
BELT QTY : 2

FAN SHV PART NUMBER : 2B58SDS
FAN BSH PART NUMBER : SDS X1-7/16
MTR SHV PART NUMBER : 2B56SDS
MTR BSH PART NUMBER : SDS X1-5/8
BELT PART NUMBER : BX95

CERTIFIED DRAWING PACKET*

FAN CERTIFIED DRAWING..... Dwg# N00129-105-2
BELT GUARD..... Dwg# N00129-106-3
UNITARY BASE..... Dwg# N00129-107-4
ISOLATION..... Dwg# N00129-107-5

ADDITIONAL ACCESSORIES

SHAFT & BEARING GUARD
DRAIN

ADDITIONAL INFORMATION

NUMBER OF DRAWING SETS : 6
ESTIMATED SHIPPING WT. : 882 lbs.
(includes fan, motor, & pertinent accessory weights)

* DRAWINGS ARE FOR CONSTRUCTION PURPOSES

HDCOVER

nyb The New York Blower Company
7660 Quincy Street, Willowbrook, IL 60521

Pressure Blower - ST
SIZE 2110S

Date 01/9/96 Certified JKM
Drawing No. N00129-105-1 Rev. -

FMC CORP

PURCHASE ORDER: 9522502-C

TAG: F-1400

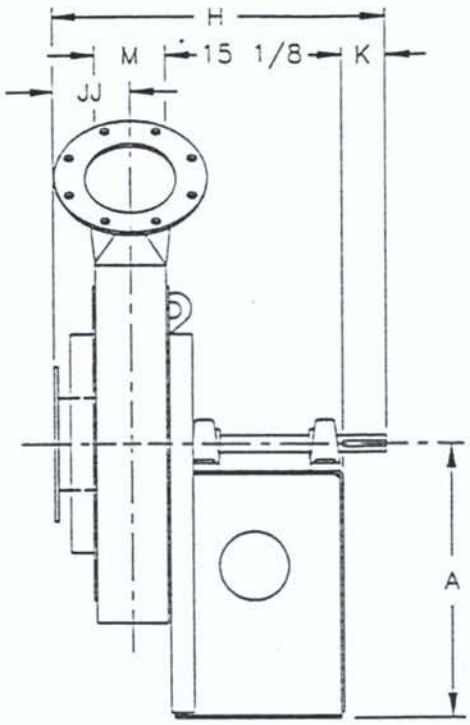

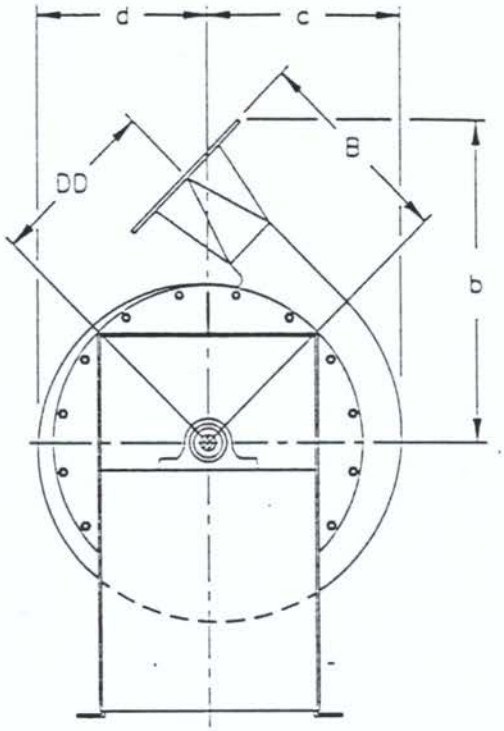

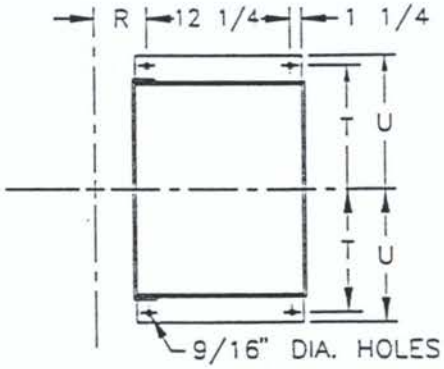

PRESSURE BLOWERS ARE ROTATABLE IN THE FIELD BY 22 1/2° INCREMENTS.

FURNISHED WITH FLANGED INLET AND OUTLET WHICH FITS ANSI 150 PIPE FLANGES.

MAXIMUM TEMPERATURE : 200°F (93°C)

ITEM	DIMENSIONS	
	in	mm
A	23 5/8	600
H	29	737
L	8 5/8	219
M	6 1/4	159
R	4 1/2	114
T	10 7/8	276
U	11 3/4	298
JJ	6 3/4	171
b	31 9/16	802
c	17	432
d	15	381
SHAFT DIAM.	1 7/16	–
KEYWAY	3/8	–

FLANGED OUTLET	DIMENSIONS	
	in	mm
I.D.	10	254
B.C.	14 1/4	362
O.D.	16	406
NO. HOLES	12	–
DIA. HOLES	1	25

FLANGED INLET	DIMENSIONS	
	in	mm
I.D.	10	254
B.C.	14 1/4	362
O.D.	16	–
NO. HOLES	12	–
DIA. HOLES	1	25

TOLERANCE: ±1/8" (±3mm)

nyb The New York Blower Company

7660 Quincy Street, Willowbrook, IL 60521

PRESSURE BLOWER
SIZE 2110 CCW TAU

Date 01-09-96 Certified JKM

Drawing No. N00129-105-2 Rev. ___

B1R

FMC CORP

PURCHASE ORDER : 9522502-C

TAG : F-1400

POSITION W
FRONT VIEW

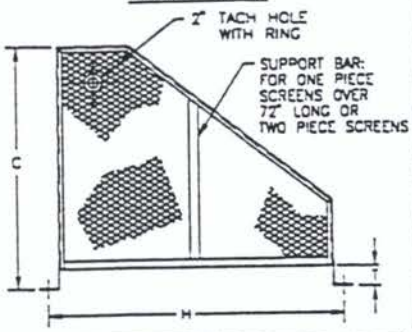

POSITION W
TOP VIEW

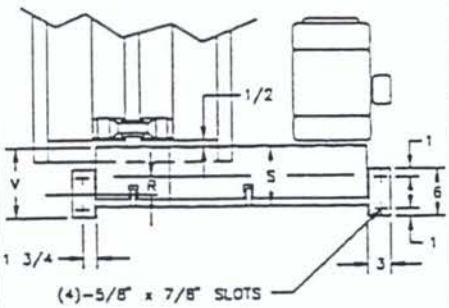

POSITION W
BACK VIEW

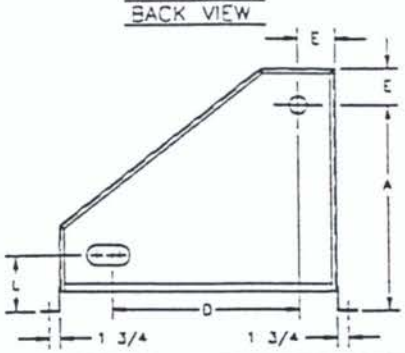

POSITION Z
FRONT VIEW

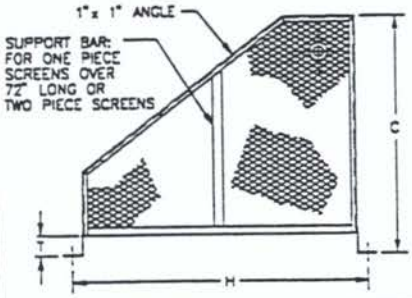

POSITION Z
TOP VIEW

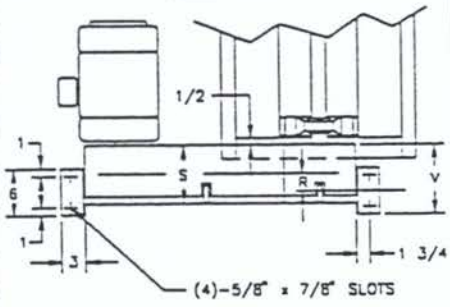

POSITION Z
BACK VIEW

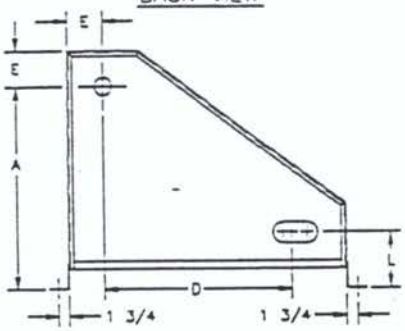

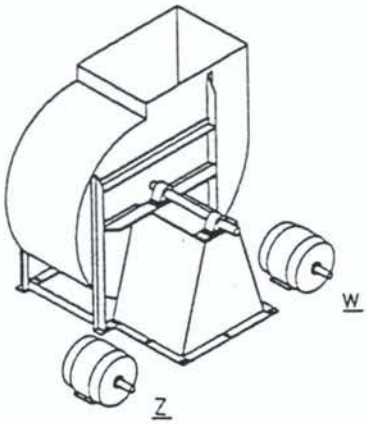

AMCA STANDARD MOTOR POSITIONS

MOTOR POSITIONS ARE DETERMINED BY VIEWING FAN FROM DRIVE SIDE, AND SELECTING W OR Z.

CONSTRUCTION FEATURES

1. DIM."L" IS BASED ON MOTOR MOUNTED ON NEMA SLIDE BASE AND WITH SUPPORT CHANNEL WHEN UNITARY BASE IS FURNISHED BY THE NEW YORK BLOWER COMPANY.
2. DIM."R" IS FROM CENTERLINE OF GUARD TO CENTERLINE OF FOOT.
3. GUARD FEET MAY BE OFFSET TO CLEAR BEARING PEDESTAL BASE BAR.
4. REMOVABLE FRONT IS ATTACHED WITH SPRING HOOK CLAMPS.

DIMENSIONS

A	23-5/8
C	28-7/8
D	36-15/16
E	5-1/4
H	53-5/8
L	9-13/16
R	0
S	6
T	3
V	6

TOLERANCE: ±1/8" (±3mm)

Approx. Wt.(lbs): 89

nyb The New York Blower Company

7560 Quincy Street, Willowbrook, IL 60521

ARR. 1 BELT GUARD

Pressure Blower - ST SIZE 2110S

Date 01/9/96 Certified JKM

Drawing No. N00129-106-3 Rev.

FM18_2

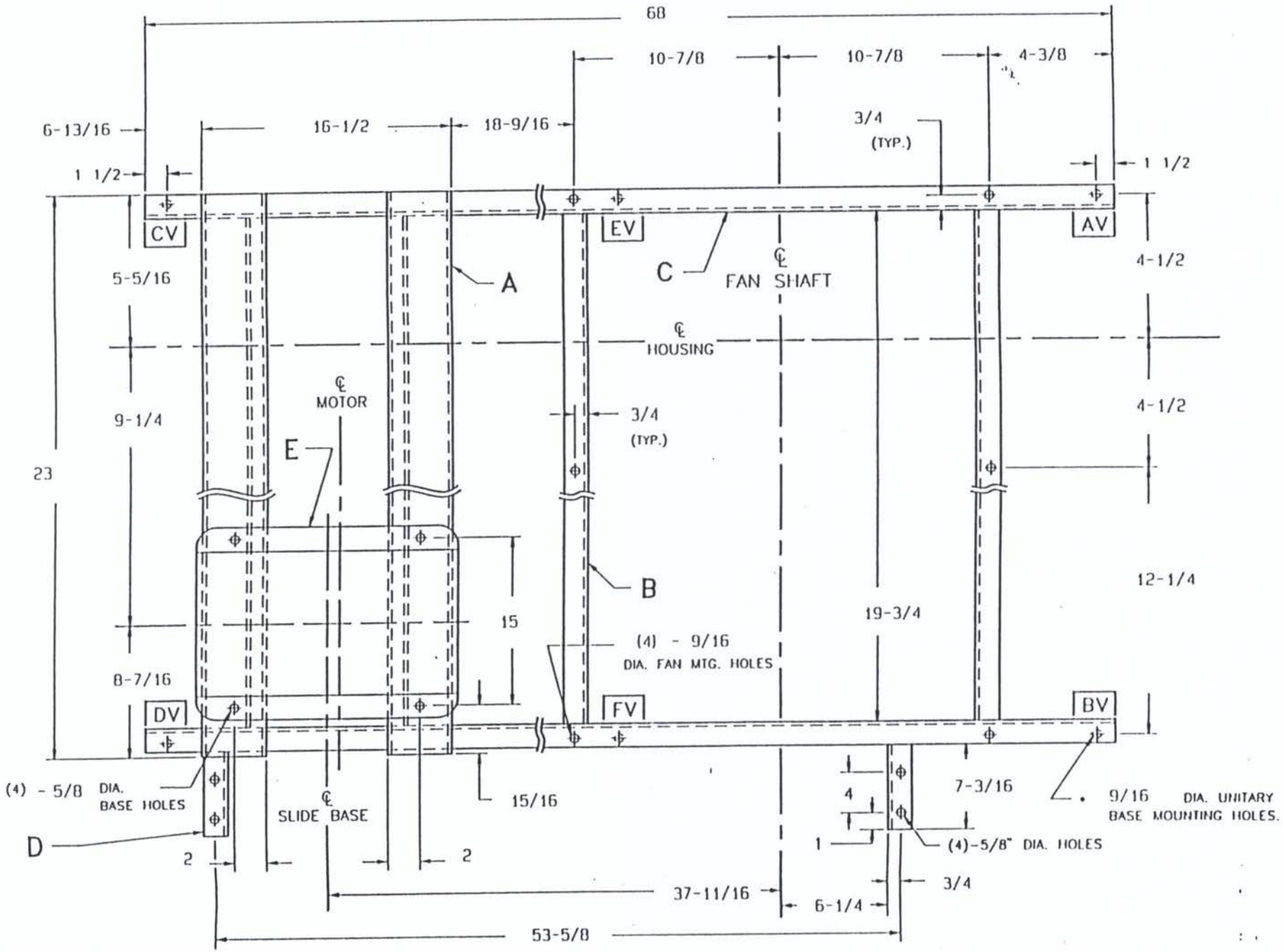
68
10-7/8
10-7/8
4-3/8
6-13/16
16-1/2
18-9/16
3/4
(TYP.)
1 1/2
1 1/2
CV
EV
AV
5-5/16
A
C
℄
FAN SHAFT
4-1/2
℄
HOUSING
℄
MOTOR
9-1/4
3/4
(TYP.)
4-1/2
E
23
B
12-1/4
15
19-3/4
(4) - 9/16
DIA. FAN MTG. HOLES
8-7/16
DV
FV
BV
(4) - 5/8 DIA.
BASE HOLES
℄
SLIDE BASE
15/16
7-3/16
4
9/16 DIA. UNITARY
BASE MOUNTING HOLES.
D
2
2
1
(4)-5/8" DIA. HOLES
37-11/16
3/4
6-1/4
53-5/8

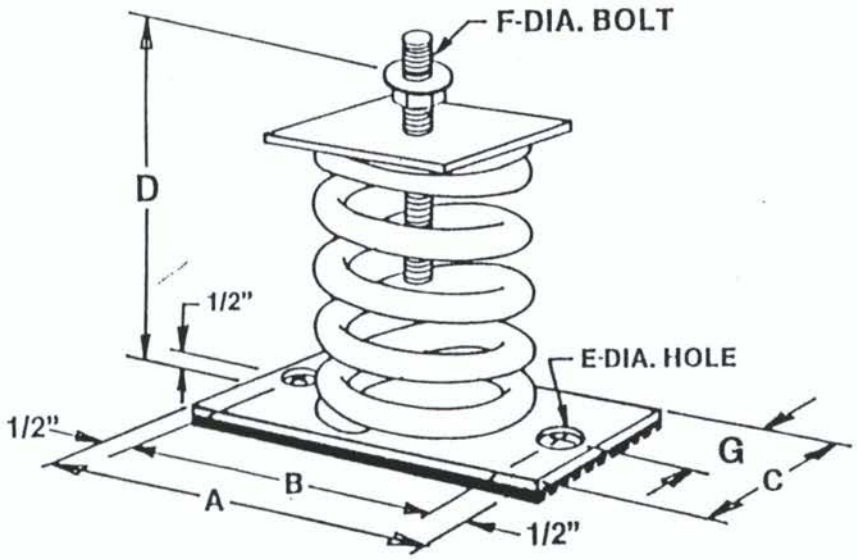

OST1, 3, & 4

Installation Instructions:

1. Elevate base or equipment to operating height and insert blocks to hold in this position. (If jacking, lift from all brackets simultaneously - Do not place excessive load on any one bracket.)
2. Place isolators in position under bracket, base, or equipment leg. Isolators must be installed on a level surface.
3. Turn lock nut onto leveling bolt, then insert bolt down through hole in bracket or base and into threaded hole in isolator top housing.
4. Proceed to adjust isolators by turning the leveling bolt clockwise several turns at a time alternately on each isolator until load is transferred onto springs and base is raised uniformly off blocks. Remove the blocks.
5. Turn lock nut clockwise and secure firmly against the top of the bracket or base.
6. Mounts are now properly adjusted and ready for the equipment to be operated.

MODEL NUMBER	SPRING		ISOLATOR DIMENSIONS (INCHES)						
	O.D.	F.H.	A	B	C	D	E	F	G
OST1 - 1 thru 8	2 1/2	3 1/2	5	4	2 1/2	5 1/4	9/16	5/8	1 1/4
OST2R-F21 thru F26	1 3/4	3 1/8	4	3	2 1/8	4 3/4	7/16	1/2	1 1/16
OST3 -F30 thru F41	2 7/8	4 1/4	6	5	3	6	9/16	5/8	1 1/2
OST4 -F50 thru F59	4 1/2	6 1/2	7	6	4 1/2	8 1/4	9/16	3/4	2 1/4

TOLERANCE ± ⅛"

OST2R

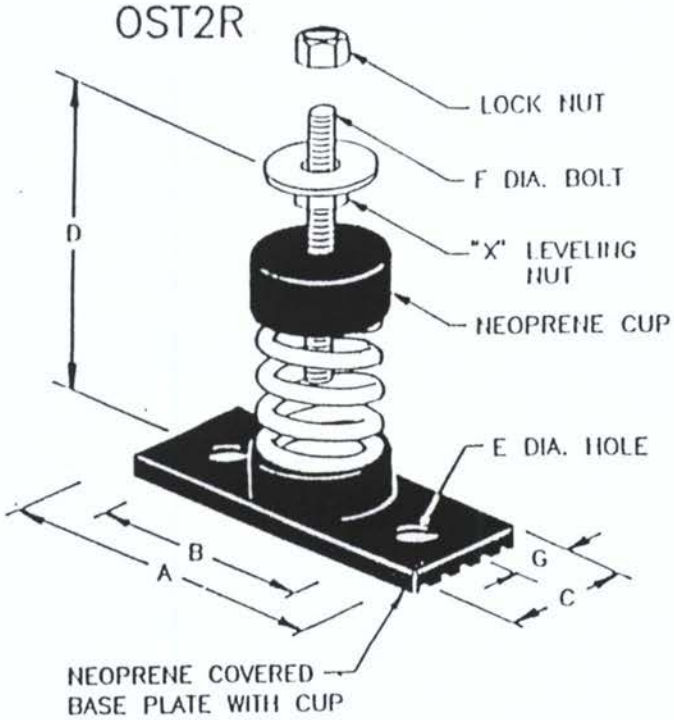

MATCHING BRACKET – OCT ONLY

(OPTIONAL: FOR HEIGHT SAVING CLIP BASES ONLY)

MATCHING BRACKET
(OCT ONLY)

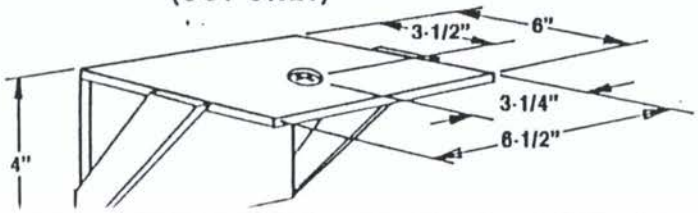

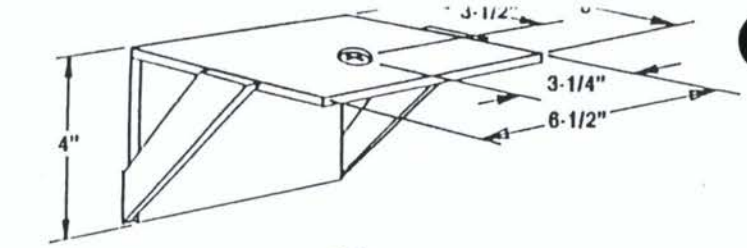

NEOPRENE COVERED
BASE PLATE WITH CUP

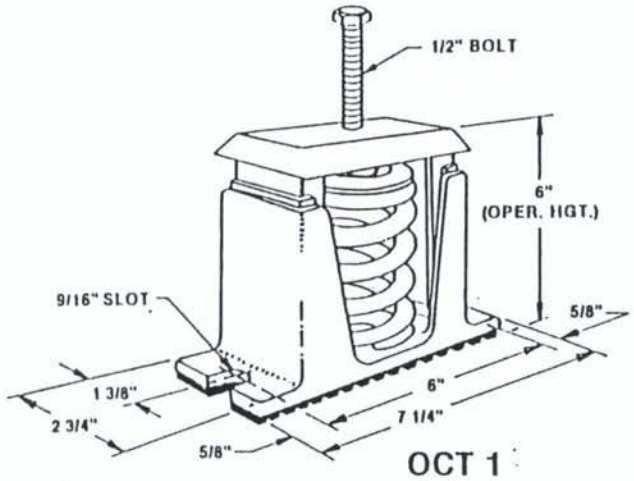

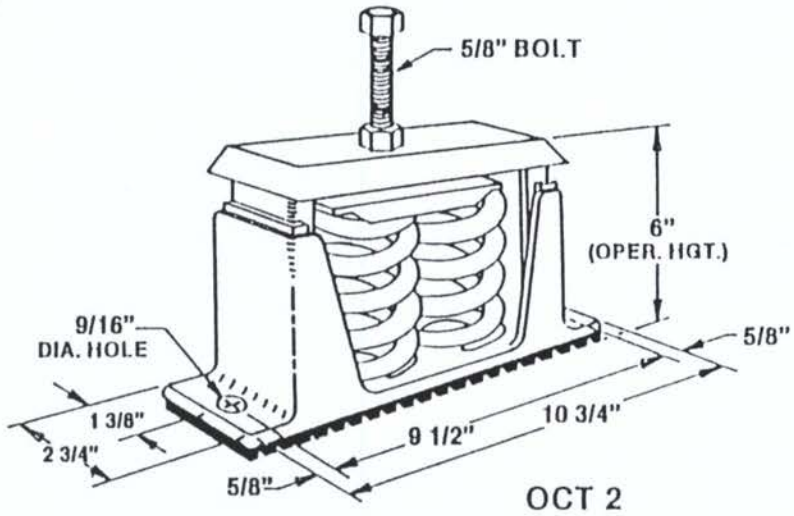

Dimensions should not be used for construction purposes unless certified.

DATE 01-09-96 CERTIFIED jkm kw CONTROL NO. 107

CUSTOMER'S NO. 9522502-C
CUSTOMER'S NAME FMC CORP
TAG F-1400

QTY.	MODEL NO.	COLOR
1	OCT 1-2	YELLOW
2	OCT 1-3	RED
1	OCT 1-4	WHITE

CERTIFIED DRAWING

FORM NO. V-4 C

7660 Quincy Street
Willowbrook, Illinois 60521

nyb | The New York Blower Company

OCT (HOUSED), & OST SPRING ISOLATORS for FLOOR MOUNTING

DRAWING NUMBER

FILE N00129-107-5

The New York Blower Company

PERFORMANCE CURVE

[illegible]60 Quincy Street, Willowbrook, IL 60521

To determine Performance at another RPM multiply
CFM x K
SP x K^2
BHP x K^3
where K is new RPM divided by RPM shown at right.

CUST. NO : *9522502-C*
CUSTOMER : *FMC CORP*
TAGGING : *F-1400*
FAN TYPE : *Pressure Blower - ST*
FAN SIZE : *2110S*
CFM : *2500*
SP. : *25.0*
RPM : *3405*
BHP : *15.21*

CAPACITY TYPE: OPER
TEMP : *70* deg F
DENS : *0.062* LB/FT³

DATE : *Jan 9 1996*
FILE : *N00129 - 105*
JKM

PERFORMANCE OPTIONS :

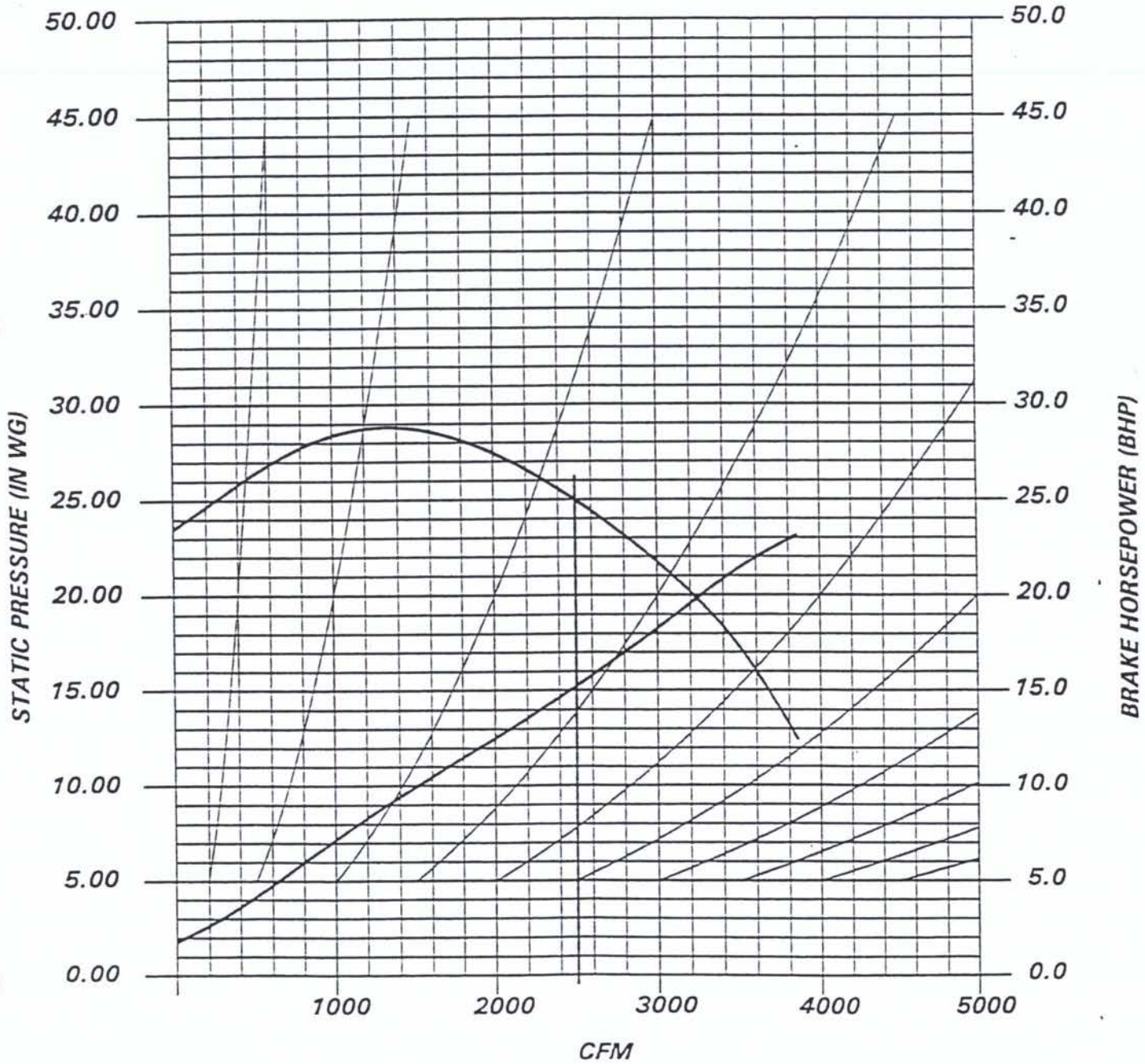

APPENDIX 6
SUMP SYSTEM DRAWINGS

APPENDIX 6 SUMP SYSTEM DRAWINGS

P&IDs

395053 –Wastewater Collection No. 3 & No. 4 Furnace and Furnace Area sumps, Rev 13

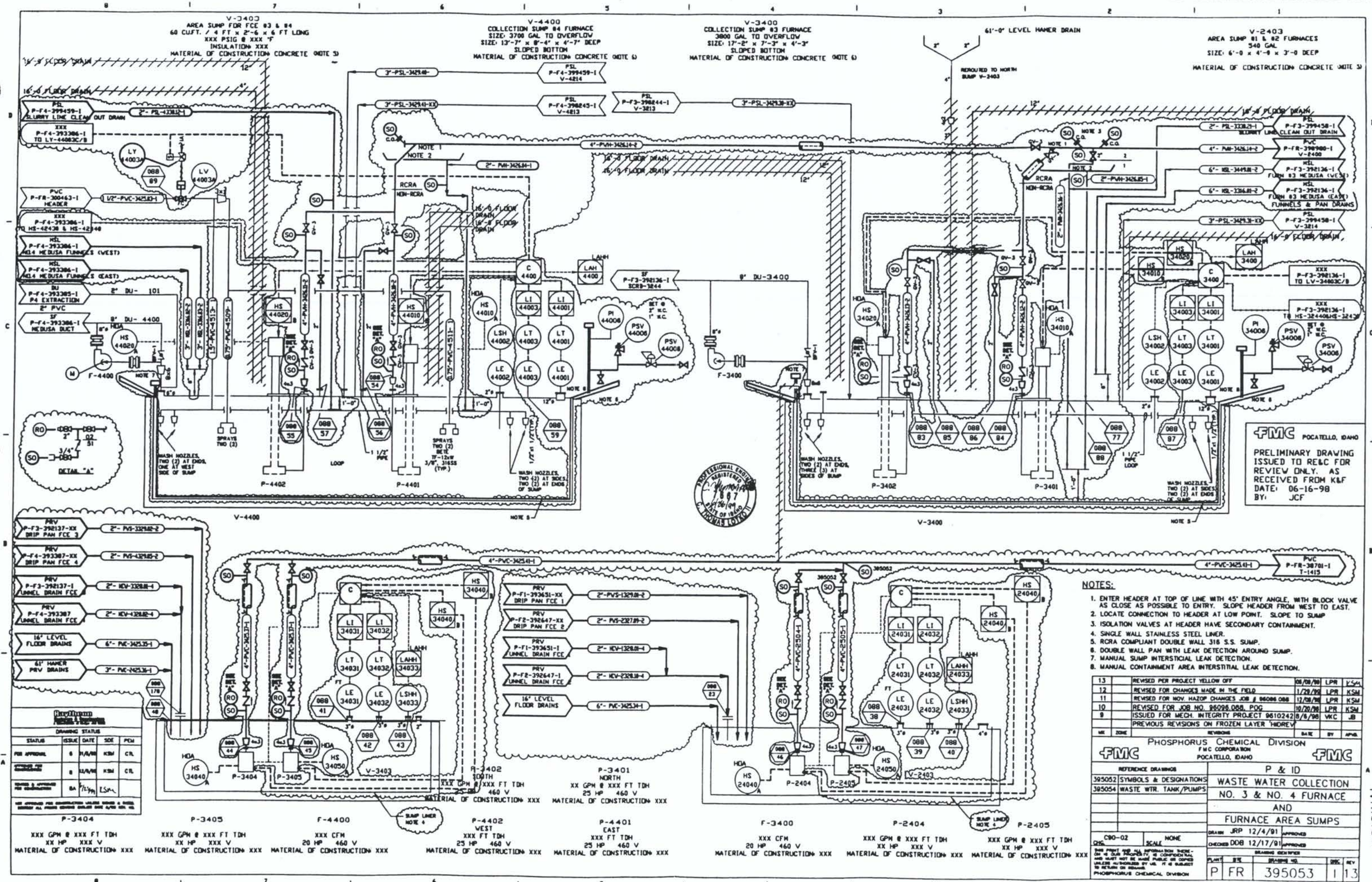
V-3403
AREA SUMP FOR FCE #3 & #4
60 CU.FT. / 4 FT x 2'-6 x 6 FT LONG
XXX PSIG @ XXX °F
INSULATION: XXX
MATERIAL OF CONSTRUCTION: CONCRETE (NOTE 5)
V-4400
COLLECTION SUMP #4 FURNACE
SIZE: 3700 GAL TO OVERFLOW
SIZE: 13'-7" x 8'-4" x 4'-7" DEEP
SLOPED BOTTOM
MATERIAL OF CONSTRUCTION: CONCRETE (NOTE 6)
V-3400
COLLECTION SUMP #3 FURNACE
3800 GAL TO OVERFLOW
SIZE: 17'-2" x 7'-3" x 4'-3"
SLOPED BOTTOM
MATERIAL OF CONSTRUCTION: CONCRETE (NOTE 6)
61'-0" LEVEL HAMER DRAIN
REROUTED TO NORTH SUMP V-2403
V-2403
AREA SUMP #1 & #2 FURNACES
540 GAL
SIZE: 6'-0 x 4'-9 x 3'-0 DEEP
MATERIAL OF CONSTRUCTION: CONCRETE (NOTE 5)
16'-0 FLOOR DRAIN
DETAIL "A"
P-4402
P-4401
P-3402
P-3401
V-4400
V-3400
F-4400
F-3400
P-3404
P-3405
P-2404
P-2405
V-3403
V-2403
P-3402
NORTH
XX GPM @ XXX FT TDH
25 HP 460 V
MATERIAL OF CONSTRUCTION: XXX
P-3401
NORTH
XX GPM @ XXX FT TDH
25 HP 460 V
MATERIAL OF CONSTRUCTION: XXX
P-3404
XXX GPM @ XXX FT TDH
XX HP XXX V
MATERIAL OF CONSTRUCTION: XXX
P-3405
XXX GPM @ XXX FT TDH
XX HP XXX V
MATERIAL OF CONSTRUCTION: XXX
F-4400
XXX CFM
20 HP 460 V
MATERIAL OF CONSTRUCTION: XXX
P-4402
WEST
XXX FT TDH
25 HP 460 V
MATERIAL OF CONSTRUCTION: XXX
P-4401
EAST
XXX FT TDH
25 HP 460 V
MATERIAL OF CONSTRUCTION: XXX
F-3400
XXX CFM
20 HP 460 V
MATERIAL OF CONSTRUCTION: XXX
P-2404
XXX GPM @ XXX FT TDH
XX HP XXX V
MATERIAL OF CONSTRUCTION: XXX
P-2405
XXX GPM @ XXX FT TDH
XX HP XXX V
MATERIAL OF CONSTRUCTION: XXX
FMC POCATELLO, IDAHO
PRELIMINARY DRAWING ISSUED TO RE&C FOR REVIEW ONLY. AS RECEIVED FROM K&F
DATE: 06-16-98
BY: JCF
PROFESSIONAL ENGINEER
REGISTERED
STATE OF IDAHO
THOMAS LOTKO II
NOTES:
1. ENTER HEADER AT TOP OF LINE WITH 45° ENTRY ANGLE, WITH BLOCK VALVE AS CLOSE AS POSSIBLE TO ENTRY. SLOPE HEADER FROM WEST TO EAST.
2. LOCATE CONNECTION TO HEADER AT LOW POINT. SLOPE TO SUMP
3. ISOLATION VALVES AT HEADER HAVE SECONDARY CONTAINMENT.
4. SINGLE WALL STAINLESS STEEL LINER.
5. RCRA COMPLIANT DOUBLE WALL 316 S.S. SUMP.
6. DOUBLE WALL PAN WITH LEAK DETECTION AROUND SUMP.
7. MANUAL SUMP INTERSTICIAL LEAK DETECTION.
8. MANUAL CONTAINMENT AREA INTERSTITIAL LEAK DETECTION.
13 REVISED PER PROJECT YELLOW OFF 06/08/99 LPR KSM
12 REVISED FOR CHANGES MADE IN THE FIELD 1/29/99 LPR KSM
11 REVISED FOR NOV. HAZOP CHANGES JOB # 96096.088 12/08/98 LPR KSM
10 REVISED FOR JOB NO. 96096.088, POG 10/20/98 LPR KSM
9 ISSUED FOR MECH. INTEGRITY PROJECT 9610242 8/6/98 VKC JB
PREVIOUS REVISIONS ON FROZEN LAYER 'HIDREV'
MK ZONE REVISIONS DATE BY APVD.
PHOSPHORUS CHEMICAL DIVISION
FMC CORPORATION
POCATELLO, IDAHO
REFERENCE DRAWINGS
395052 SYMBOLS & DESIGNATIONS
395054 WASTE WTR. TANK/PUMPS
P & ID
WASTE WATER COLLECTION
NO. 3 & NO. 4 FURNACE
AND
FURNACE AREA SUMPS
DRAWN JRP 12/4/91 APPROVED
CHECKED DDB 12/17/91 APPROVED
CHG. C90-02
SCALE NONE
PLANT P
SITE FR
DRAWING NO. 395053
DISC 1
REV 13
PHOSPHORUS CHEMICAL DIVISION
K395053.DWG
ORIGINAL

APPENDIX 7
INSTALLATION INSPECTION

APPENDIX 7 INSTALLATION INSPECTION

INSPECTION CHECKLIST & SIGN OFF

Rust Constructors Inc.

Sump Pressure Test Report

Client: FMC Pocatello
Project: Point of Generation
Location: V3400 Sump
Contract No. 96616.088 Contractor: Rust / Cole
Prepared By: J Clevenger Date: 8-27-99
Approved By: B Beck Date: 8-27-99 Gauge:

Test No.: V3400-01 Page: 1 of 1
System: NA
Design Press.: NA
Test Press.: 1" to 2" wc Media: AIR
Type:(Circle one) Pressure Inspection Soap Bubble
Use test set-up with dip tube. ✓

Description of Test:

1) Install both diptubes in the liner – ensure all welding is complete and inspected. ✓
2) Install sump test equipment as shown on Detail 2 on drawing 300665 rev 0. ✓
3) Verify Protectoseal breather vent on dipstick is properly installed per instructions and operable.
4) Ensure dipstick caps are installed with gaskets and are tight. ✓
5) Hook up plant instrument air (or clean and filtered air) to inlet valve on sump test equipment. ✓
6) Pressurize space between primary and secondary liner with 1" to 2" water column air pressure. Use Magnehelic Gauge to verify pressure. ✓
7) Use a soap solution to check all welds in the primary liner. ✓
8) Turn off air and perform pressure drop test for 1 hour. Note Pressure here: Beginning Pressure 2" End Pressure 2"

Exceptions: MAGNEHELIC DIFFERENTIAL PRESSURE GAGE LEAKED DURING TEST. WHEN LEAK WAS PLUGGED PRESSURE HELD FOR 60 MIN. JC

Acceptance:	Test Completed:	Date:	System Restored:	Date:
Contractor:				
RUST:	J Clevenger	8-27-99	RPB	8-28-99
FMC:				

Exceptions completed:

RUST Constructors Inc.

FMC Alliance
Task: 96096.088

INSTALLATION INSPECTION CERTIFICATION SIGN-OFF
WASTEWATER COLLECTION SUMP SYSTEM V-3400

DOCUMENTATION	INSPECTED	RECEIVED FORMS	COMPANY	SIGNATURE	DATE
Field Equipment and Materials					
1/4" 316L SST Diamond Plate Material Certification	✓	✓	Rust	WBLt	9-13-99
1/4" 316L SST Diamond Plate Material Received Condition	✓	✓	Rust	WBLt	9-13-99
Breather Vent Receiving Inspection	✓	✓	Rust	DA	9-13-99
Pressure Regulator Receiving Inspection	✓	✓	Rust	DA	9-13-99
Miscellaneous Component Receiving Inspections		✓	Rust	DA	9-13-99
Shop Double Wall Pan Fabrication (Premier)					
1/4" 316L SST Plate Material Certification	✓	✓	Rust	DA	9-13-99
Stainless Steel Hardware Material Certifications	✓	✓	Rust	DA	9-13-99
Stainless Steel Pipe Material Certifications	✓	✓	Rust	DA	9-13-99
Fabricator Quality Control Manual	✓	✓	Rust	DA	9-13-99
Weld Procedure Specifications and Qualification Records	✓	✓	Rust	DA	9-13-99
Welder Qualification Test Records	✓	✓	Rust	DA	9-13-99
Liquid Penetrant Test Procedures	✓	✓	Rust	DA	9-13-99

RUST Constructors Inc.

FMC Alliance
Task: 96096.088

INSTALLATION INSPECTION CERTIFICATION SIGN-OFF
WASTEWATER COLLECTION SUMP SYSTEM V-3400

DOCUMENTATION	INSPECTED	RECEIVED FORMS	COMPANY	SIGNATURE	DATE
Liquid Penetrant Test Records/Reports	✓	✓	Rust	[illegible]	9-13-99
Inspector Credentials/Certifications	✓	✓	Rust	[illegible]	9-13-99
Repair Reports	✓	✓	Rust	[illegible]	9-13-99
Shop Drawings	✓	✓	Rust	[illegible]	9-13-99
11 Gauge 316L SST Sheet Material Certification	✓	✓	Rust	[illegible]	9-13-99
7 Gauge 316L SST Sheet Material Certification	✓	✓	Rust	[illegible]	9-13-99
Bolt/Stud Material Certification	✓	✓	Rust	[illegible]	9-13-99
Stud Visual Weld Inspection	N/A	—	—	—	
Physical/Dimension Inspection BY C.T.C. Reports on File	—	—	—	—	
Clean/Dryness Between Primary & Secondary Plates	✓	✓	Rust	[illegible]	9-13-99
Field Double Wall Pan Fabrication/Installation (Cole)					
Containment Area/Sump Existing Surface Inspection	✓	NA	RUST	RPB	9-15-99
Fabricator Quality Control Manual					
Weld Procedure Specifications and Qualification Records	✓	✓	Rust	[illegible]	9-13-99
Welder Qualification Test Records	✓	✓	Rust	[illegible]	9-13-99
Liquid Penetrant Test Procedures	✓	✓	Rust	[illegible]	9-13-99

RUST Constructors Inc.

FMC Alliance
Task: 96096.088

INSTALLATION INSPECTION CERTIFICATION SIGN-OFF
WASTEWATER COLLECTION SUMP SYSTEM V-3400

DOCUMENTATION	INSPECTED	RECEIVED FORMS	COMPANY	SIGNATURE	DATE
Liquid Penetrant Test Records/Reports	✓	✓	Rust	DH	9-13-99
Inspector Credentials/Certifications	✓	✓	Rust	DH	9-13-99
Repair Reports	✓	✓	Rust	DH	9-13-99
Stud Visual Weld Inspection	N/A	✓	—	✓	
Pressure/Soap Solution Test Report	✓	✓	Rust		
Side Wall Retainer/Side Wall Interface Clearance	✓	✓	RUST	RPB	9-15-99
Expansion Joint Inspection/Gasket Installation Verification	✓	✓	RUST	RPB	9-15-99
Clean/Dryness Between Primary & Secondary Plates	✓	✓	RUST	RPB	9-15-99
Weld Identification Drawing (Weld Maps)	✓	✓	Rust	DH	9-13-99
Field Piping Erector (Atlas)					
Fabricator Quality Control Manual					
Weld Procedure Specifications and Qualification Records	✓	✓	Rust	DH	9-13-99
Welder Qualification Test Records	✓	✓	Rust	DH	9-13-99
Non-Destructive Test Procedures:	✓	✓	Rust	DH	9-13-99
Radiograph	✓	✓	Rust	DH	9-13-99
Hydrostatic	✓	✓	Rust	DH	9-13-99
Non-Destructive Test Reports:					

RUST Constructors Inc.

FMC Alliance
Task: 96096.088

INSTALLATION INSPECTION CERTIFICATION SIGN-OFF
WASTEWATER COLLECTION SUMP SYSTEM V-3400

DOCUMENTATION	INSPECTED	RECEIVED FORMS	COMPANY	SIGNATURE	DATE
Radiograph Records	✓	✓	Rust	DH.	9-13-99
Hydrostatic Test Records	✓	✓	Rust	DH.	9-13-99
Inspector Credentials/Certifications	✓	✓	Rust	DH.	9-13-99
Material Certifications and Test Reports	✓	✓	Rust	DH.	9-13-99
Weld Identification Drawings (Weld Maps)	✓	✓	Rust	DH.	9-13-99
Insulation/Heat Trace Inspection	✓	✓	Rust	DH.	9-13-99
Field Structural Steel Erector (Sump Lid & Misc. Steel)					
Cole Steel					
Fabricator Quality Control Manual					
Weld Procedure Specifications and Qualification Records	✓	✓	Rust	DH.	9-13-99
Welder Qualification Test Records	✓	✓	Rust	DH.	9-13-99
Non-Destructive Test Procedures:					
Visual	✓	✓	Rust	DH.	9-13-99
Non-Destructive Test Reports:	✓	✓	Rust	DH.	9-13-99
Visual Inspection Records	✓	✓	Rust	DH.	9-13-99
Inspector Credentials/Certifications	✓	✓	Rust	DH.	9-13-99

RUST Constructors Inc.

FMC Alliance
Task: 96096.088

INSTALLATION INSPECTION CERTIFICATION SIGN-OFF
WASTEWATER COLLECTION SUMP SYSTEM V-3400

DOCUMENTATION	INSPECTED	RECEIVED FORMS	COMPANY	SIGNATURE	DATE
Field Civil Contractor					
Concrete Mix Design:	✓	✓	RUST	RPB	9-15-99
Containment Walls	✓	✓	RUST	RPB	9-15-99
Containment Area Floor	✓	✓	RUST	RPB	9-15-99
Containment Wall Concrete Test Reports:					
Slump & Air	✓	✓	RUST	RPB	9-15-99
Strength (7 & 28 day)	✓	✓	RUST	RPB	9-15-99
Batch Tickets	✓	✓	RUST	RPB	9-15-99
Sump Grout Mix Design	✓	✓	RUST	RPB	9-15-99
Inspector Name/Credentials/Certifications	✓	✓	RUST	[illegible]	9-13-99
Containment Wall Surface Preparation:	✓	✓	RUST	RPB	9-15-99
Cleaning	✓	✓	RUST	RPB	9-15-99
Roughing	✓	✓	RUST	RPB	9-15-99
Bonding Agent Application	✓	✓	RUST	RPB	9-15-99
Floor Surface Preparation:					
Cleaning	✓	✓	RUST	RPB	9-15-99
Surface Condition	✓	✓	RUST	RPB	9-15-99

RUST Constructors Inc.

FMC Alliance
Task: 96096.088

INSTALLATION INSPECTION CERTIFICATION SIGN-OFF
WASTEWATER COLLECTION SUMP SYSTEM V-3400

DOCUMENTATION	INSPECTED	RECEIVED FORMS	COMPANY	SIGNATURE	DATE
Rebar Installation:					
Epoxy Doweling	✓	✓	RUST	RPB	9-15-99
Rebar Size & Spacing	✓	✓	RUST	RPB	9-15-99
Floor Mesh Installation	NA	—	—	—	
Containment Area Slope	✓	—	RUST	RPB	9-15-99