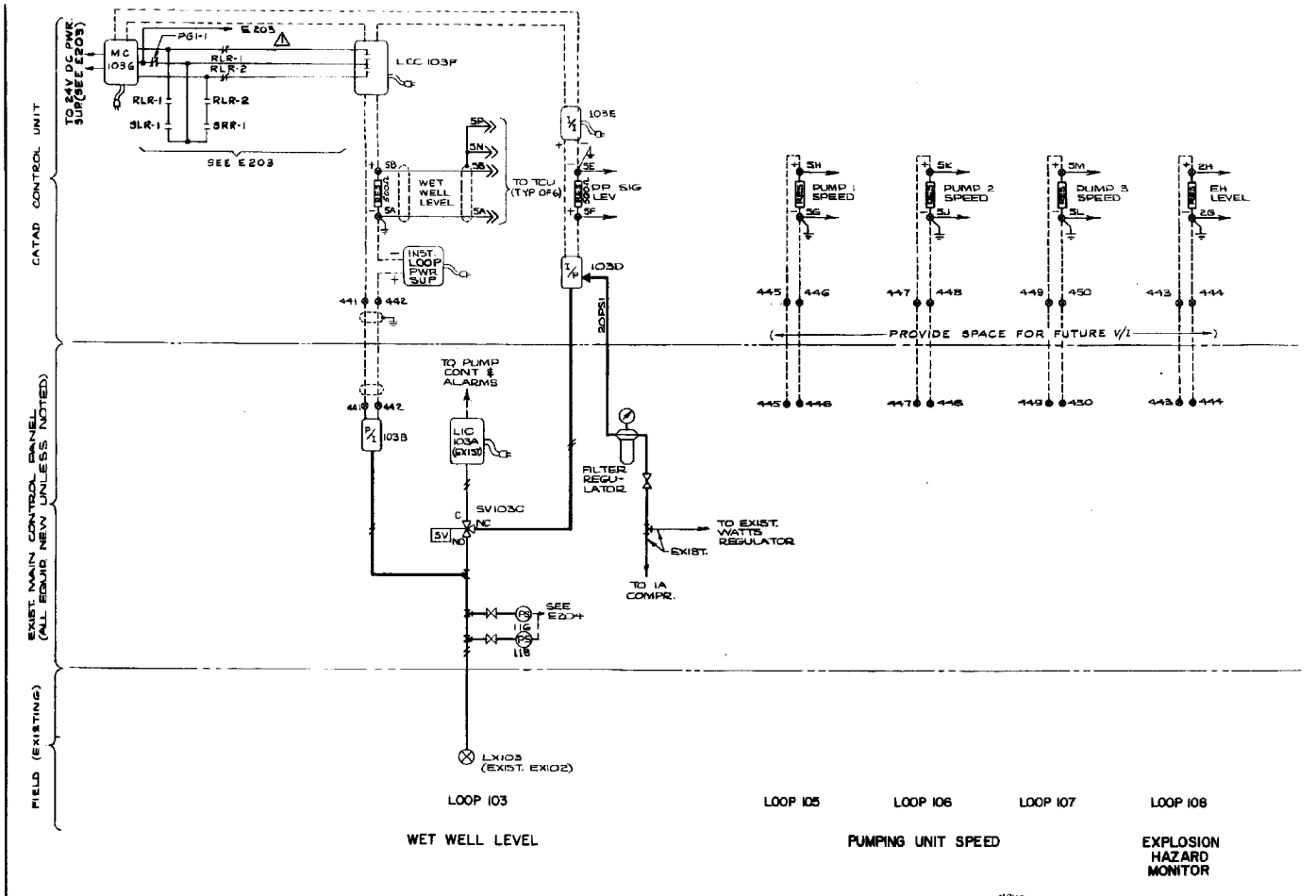

NOTE:

FOR INSTRUMENT SYMBOLS & LEGEND SEE G3.

SUPERSEDED
SEE DWG EQ 173-74 DATE 10/89

AS CONSTRUCTED
DATE JULY 1975

NO	REVISION	DATE	BY
1	REVISED PULSE GENERATOR	5-4-74	JAR

DESIGNED JS
DRAWN SKB
CHECKED PCL

METROPOLITAN ENGINEERS
BROWN AND CALDWELL — CAREY AND KRAMER
HILL AND INGMAN — R W BECK AND ASSOCIATES

MUNICIPALITY OF METROPOLITAN SEATTLE

SUBMITTED Design Engineer - Metropolitan Engineers
RECOMMENDED Project Engineer - Metropolitan Engineers
APPROVED Chief Engineer - Metropolitan Engineers
APPROVED For Metropolitan Engineers
APPROVED For Municipality of Metropolitan Seattle

SCALE NO SCALE
FILE C201
DATE APR. 1970

CATAD SYSTEM

PUMPING STATION INTERFACE
EAST MARGINAL WAY PS.
INSTRUMENTATION

DRAWING NUMBER E202
SHEET NUMBER 19 OF 73

KCSlip4 61571

SEA429936