PADILLA
McIntyre

RECEIVED
JUN 04 '90
EPA-WOO

N Market SF
OSYI-101
6-4-90

THE SRS/EIF OILY SLUDGE FIXATION PROCESS

Offered by:

SEPARATION AND RECOVERY SYSTEMS, INC.
IRVINE, CA

With consulting assistance from:

MITTELHAUSER CORPORATION
LAGUNA HILLS, CA

USEPA SF
1520523

THE SRS/EIF SLUDGE FIXATION PROCESS
OFFERED EXCLUSIVELY BY SEPARATION AND RECOVERY SYSTEMS, INC.

The SRS/EIF process is a chemical fixation technology developed in France by EIF Ecology in 1977 to detoxify wastes that have significant organic content. The types of organic wastes that have been treated by this process include crude oil, refinery intermediate or final products, halogenated chemicals, PCBs, pesticides, sludges, tars, painting wastes, and acid sludges.

The SRS/EIF process is effective on wastes that contain a minimum of 3 to 5% organics and has worked very well on wastes that contain up to 80% organics. The process has been used in Europe to detoxify a variety of organic wastes for the past ten years. Wastes from over ten different sites have been processed, totalling more than 200,000 cubic yards. Some of these sites have been located in business and residential areas. There have been no environmental problems as a result of the application of this process.

During the past year, SRS has completed a demonstration of the SRS/EIF fixation process at a Midwest CERCLA site. In addition, sludges representing several different types of organic wastes have been treated in the laboratory.

The remainder of this document will describe the SRS/EIF process and some of the projects and tests that have been completed using this process. The following topics are addressed:

1.0 Process History
2.0 Process Description
3.0 Areas of Significant Improvement over other Fixation Processes
4.0 Process Applicability
5.0 Data from Past Projects and Tests.

1.0 PROCESS HISTORY

The process was originally developed by EIF Ecology to treat an organic sludge pit that was listed for cleanup by the French environmental authorities. After a careful evaluation of the problems associated with fixation of a waste containing a high percentage of organics, EIF set several objectives for their process development program. One objective was to develop a process chemistry which would allow treatment of a wide range of organic constituents and allow fixation of sludges containing a high percentage of organics.

A second objective was to develop a process that would detoxify the waste being treated. EIF Ecology did not believe that only isolating or encapsulating the waste into a concrete-like matrix would be acceptable. Instead, the process must promote chemical reactions between the waste organic and inorganic constituents and the fixation chemicals. The process would, therefore, be effective in significantly reducing the leachability of organic and inorganic hazardous constituents present in the waste.

EIF Ecology established a third objective of developing a process that would allow the use of simple, readily available and low cost earth working equipment for waste removal and mixing with the fixation chemicals. If sophisticated mixing and blending equipment were required, the process would be severely limited in its ability to treat contaminated debris such as wood, brick, pipe, concrete, etc., that are always found in waste pits.

The process development was successful. In 1977, EIF Ecology was awarded their first contract to treat waste from a chemical plant in Dollbergen, Germany. A second contract followed from Anred, the French Agency for Waste Recovery and Disposal, to treat the contaminated beach sand and debris from the Amoco Cadiz wreck off the coast of Normandy.

Since that time, EIF Ecology has completed more than ten projects representing over 200,000 cubic yards of waste material. Table 1-1 shows the completed nonconfidential projects. The waste treated in these projects represents a variety of organic constituents including quench oil residuals, aromatics, polyisobutenes and polyethers, ethylene, propylene, acid sludges, tars, paint wastes, and refinery impoundment sludges. Some of the results from these projects are presented in Section 5.0

In early 1987, SRS signed an agreement with EIF Ecology that gave SRS the exclusive right to offer this technology throughout the Western Hemisphere, excluding Europe. Since that time, several wastes have been tested in the laboratory and one large scale field demonstration has been completed in the United States.

TABLE 1-1
EXAMPLES OF SITES TREATED BY SRS/EIF TECHNOLOGY

WASTE SITE	YEAR	TREATMENT
DOLLBERGEN, GERMANY	1977	HYDROCARBON WASTE TREATMENT, 54,000 CU YDS
AMOCO CADIZ, FRANCE	1978	SLUDGE TREATMENT, 12,000 CU YDS
VOEST ALPINES, KINBERG, GERMANY	1978	REFINERY SLUDGE, 1,800 CU YDS
ESSO, HAMBURG	1979	REFINERY SLUDGE, 29,000 CU YDS
MOBIL, BREMEN, GERMANY	1979	REFINERY SLUDGE, 1,000 CU YDS
NAPHTACHIMIE, FRANCE	1979	SLUDGE TREATMENT, 31,000 CU YDS
BIT OIL HALMSTEAD, SWEDEN	1981-82	SLUDGE TREATMENT, 36,000 CU YDS
ABSCON, FRANCE	1984	TREATMENT OF ACID SLUDGE, 6,000 CU YDS
GERLAND, FRANCE	1984	TREATMENT OF ACID SLUDGE, 23,000 CU YDS
BOURRON-MARLOTTE	1985	TREATMENT OF ACID SLUDGE, 33,000 CU YDS

The large scale demonstration was performed at an old Midwest refinery site. In May 1987, around 400 cubic yards of lube oil acid sludge were chemically fixed. Commercial scale equipment was used in a manner very similar to a full scale project. The results from this test are described in Section 5.0.

2.0 PROCESS DESCRIPTION

The SRS/EIF process is a lime based process. The lime is specially prepared and contains certain proprietary non-toxic chemicals that catalyze and control the reactions between the lime and the waste. Figure 2-1 shows a typical sludge fixation plan. The sludge to be treated is removed from the waste pit by a swing line, crane, or other means and placed in a blending pit. Specially prepared lime with its additives from lime storage are added to the sludge in the blending pit using an excavator. The lime blend is then mixed with the sludge and the first step of the fixation reaction takes place.

The process needs the organics present in the waste in order for the necessary reactions to proceed. At the completion of this step, a hard black sludge is changed to a grey paste and any solid pieces present have been dispersed.

After approximately fifteen minutes, a second lime preparation is added to the sludge. This preparation is different from the first in both chemical form and types of chemicals that have been added. The lime is mixed over a twenty-minute period in the blending pit. After this time, the reaction is about 80% complete. Some steam is generated by the exothermic reactions that occur.

After the second reaction step has been completed, the fixed product is tested to determine if the fixation reactions are proceeding as planned. Additional lime can be added at this point, if necessary. The treated material is then removed from the blending pit and placed on a treated product assembly line. The product is allowed to cure for approximately four weeks. This time is very important because it allows the reactions to continue in a controlled environment. After the product has been sufficiently cured, it is placed in a storage area prior to being returned to the original pit for final disposal.

The final product is a dirt or clay-like material with excellent compactive properties. It can be easily moved by bulldozer and can be compacted using conventional road compacting equipment. It can be compressed to a very low permeability. The permeability of the treated and compacted product from a refinery impoundment sludge waste recently measured to be less than 1×10^{-12} cm/sec. This permeability is far less of any current standards for impoundment liner permeability.

The heavy metals and organics present in the waste are reacted to chemically bind them into the product matrix. This is evidenced by the fact that the waste can be ground to a fine powder without a significant change in the TCLP extract concentration of hazardous organics.

MITTELHAUSER corporation

FIGURE 2-1
WASTE FIXATION PLAN

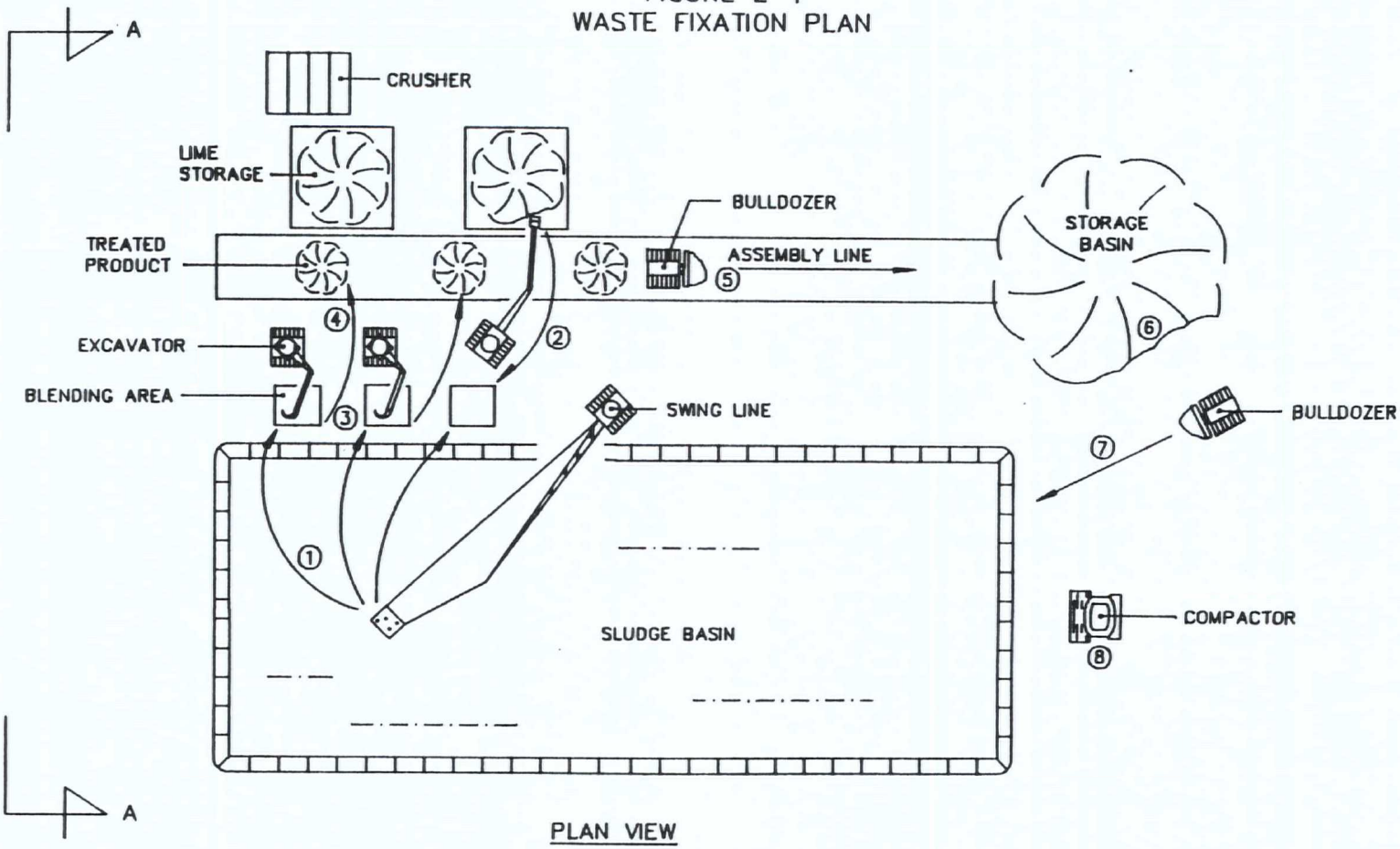

PLAN VIEW

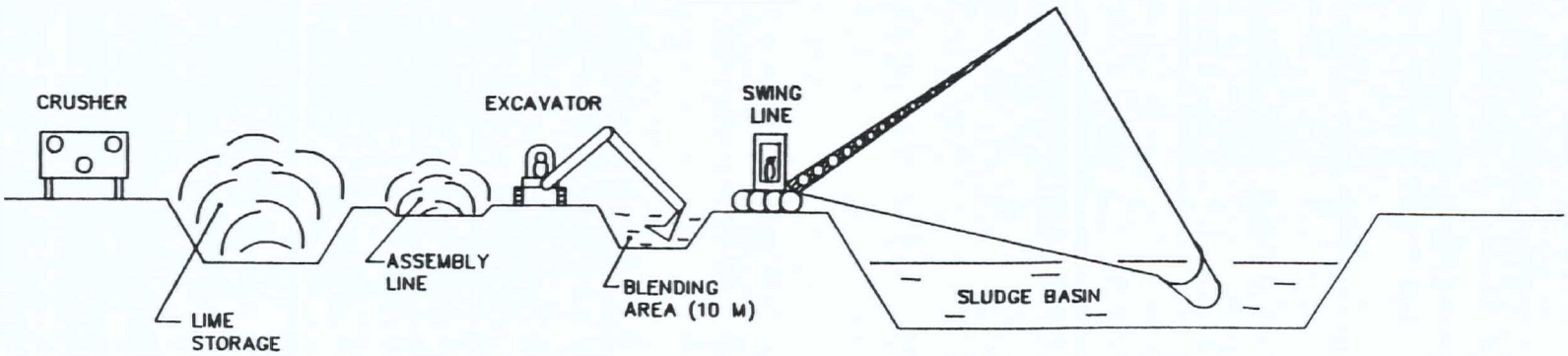

VIEW A-A

The use of conventional earth moving equipment offers two significant advantages over other fixation technologies. First, the required equipment is readily available and can be obtained at a reasonable cost throughout the United States. Second, since there are no mixers or piping involved in the process, large debris like stumps, bricks, concrete, piping, etc. can be mixed with the specially prepared lime in the blending pit and its exposed surface is cleaned of oily residue. This was proven at the Midwest demonstration test conducted this past May.

The lime, with the required additives, is readily available in the United States. SRS has signed a contract with a national supplier which will provide lime in accordance with SRS's specifications.

3.0 AREAS OF SIGNIFICANT IMPROVEMENT OVER OTHER FIXATION PROCESSES

The SRS/EIF process offers several important advantages over other fixation technologies that are presently available. These advantages are described in the following list:

- The process is commercially proven. It has been used in Europe since 1977 to fix organic-containing wastes. Data is currently being obtained from some of these sites. SRS/EIF is the only fixation process that can offer ten years of experience on sludges that contain over twenty percent organics.

- The process is capable of treating contaminated debris. Impoundments and pits contain various debris that are contaminated on the surface with hazardous organic and inorganic constituents found in the waste. The process effectively cleans the surface of the debris without problems that would be associated with the use of many mixing and piping systems.

- The process is capable of treating a wide variety of waste including solids, semi-solids, sludges, and liquids. It is effective for most organics and heavy metals. The process is particularly well suited for acidic sludges.

- The fixation reactions actually involve a chemical reaction between the lime and the hazardous constituents so that the toxicity of the waste is significantly reduced. The waste is not just encapsulated. This is demonstrated by the fact that TCLP results do not deteriorate when the procedure is run on a dirt-like powder compared to the size that is specified in the procedure.

- There is no apparent upper limit on the waste organic content. Wastes containing up to 80% organics have been treated. The process is effective at immobilizing organics because the organics are reactants in the fixation reaction.

- There is a minor increase in waste volume as a result of treatment. Many fixation technologies will increase the waste volume by 50 to 100%. The SRS/EIF process will only increase the waste volume by around 25%.

- The final treated product can be compacted to a very low permeability - orders of magnitude lower than currently required for impoundment liners. This low

permeability, coupled with the chemical binding of the hazardous constituents within the product matrix, offers a double protection against contamination of surface water and groundwater.

- The product is a clay or dirt-like solid that can be easily moved. This is far more practical than moving concrete blocks.

- With the exception of very small amounts of non-toxic proprietary chemicals, all chemicals used in the fixation process are readily available and are presently under national contract.

- The process has been used in a variety of climatological conditions including severe summer heat, heavy rains, freezing temperatures, and even snow. Treatment can proceed as long as waste can be removed from the source pit and equipment can be moved on the site.

- The process can consistently treat up to 1,000 cubic yards per day of sludge. One blending pit can process up to 350 cubic yards per day of waste. Up to three parallel blending pit operations can be operated at one time.

From the above list, SRS truly believes that this technology offers several significant improvements over other fixation technologies.

4.0 PROCESS APPLICABILITY

The SRS/EIF process can be applied to a wide variety of waste sites. The only limitation is that the waste contains a minimum of 3 to 5% organic material. Wastes containing up to 80% organics have been treated. The wastes treated by this process have included crude oil, refinery intermediate or final products, halogenated chemicals, PCBs, pesticides, sludges, tars, painting wastes, and acid sludges.

The SRS/EIF process should have at least as wide a range of applications as other technologies treating sludges that contain organics. In some instances, SRS will be able to treat wastes that are not treatable using other techniques. An example of this type of waste would be a heavy tar where the organics constitute over 50% of the waste volume.

5.0 DATA FROM PAST PROJECTS AND TESTS

SRS has been steadily acquiring data, as it becomes available, from sites that have been treated in Europe. In addition, data is available from laboratory tests and the demonstration test that has been completed in the United States.

Table 5-1 contains the characteristics of an acid sludge treated at a site near D'Abscon, France. The waste contained up to 50% organics, 1 to 40% ash, and the COD of a weak acid extract from waste samples was measured to be around 66,500 mg/kg. The waste was treated in May 1984.

Samples of the treated material were taken at the time of treatment and every six months afterwards. Fifty grams of the sample were then added to 1000 ml of distilled water adjusted to a pH of 4.5 using carbon dioxide. A rotating agitator was used to mix the solution at 60 rpm for one hour. The mixed sample was then filtered and analyzed for COD. Table 5-2 shows the results of the analyses. It is our understanding that the test was run in triplicate. Averages have been reported.

Immediately after treatment, the extract COD was still 2738 mg/l. The COD of the extract was 196 mg/l after six months and decreased to around 116 mg/l by June 1987. Anred has used the COD level of treated waste extract as a measure of the permanence of the treatment operation. The data show no degradation in the treated product. In fact, the fixation quality improves for some time after treatment.

Table 5-3 shows the characteristics of an untreated virgin lube oil acid sludge that was treated near Bourron-Marlotte, France. Characteristics of both the surface and bottom sludges are presented. The heating values and COD of the bottom sludge are indicative of a high organic waste. Table 5-4 shows COD results taken in accordance with the procedure previously described. Once again, the quality of fixation has continued to improve with time.

Core samples of treated product from three grids in each of the above pits have been recently received from France. These samples are available for inspection and analysis. We are planning to obtain core samples from a Naphthachimie site in France. The waste at this site was treated in 1979.

SRS has completed several treatment tests on wastes disposed of in the United States. For a Gulf Coast refiner, SRS fixed samples of refinery surface impoundment sludge and returned the treated material to the oil company for analysis. Table 5-5 shows the characteristics of surface sludge from this impoundment. Table 5-6 shows similar results for the bottom sludge.

TABLE 5-1

COMMERCIAL PROJECT RESULTS D'ABSCON, FRANCE UNTREATED LUBE OIL ACID SLUDGE

COMPOSITION, %	VALUE
C	20-45
H	4.5-9.5
S	1-13
H_2SO_4	2-20
ASH	1-40
HEATING VALUE, cal/gram	~4000
COD(extract), mg/Kg	66,500

TABLE 5-2

COMMERCIAL PROJECT RESULTS D'ABSCON, FRANCE TREATED PRODUCT

SAMPLE DATE	COD OF EXTRACT, mg/l
12 hrs after treatment*	2738
11/08/84	196
05/10/85	143
11/20/85	120
05/22/86	118
11/12/86	116
06/04/87	116

* TREATMENT STARTED 5/14/84

TABLE 5-3

COMMERCIAL PROJECT RESULTS

Bourron-Marlotte, France

Virgin Lube Oil Acid Sludge

	POND MATERIAL	
CONSTITUENT	SURFACE	BOTTOM
Solids, %	1	19.6
Heating Value, Kcal/Kg	6,950	4,300
pH	3.45	2.10
COD, mg/Kg	4800	52,000
Sulfates mg/Kg	260	41,220

TABLE 5-4

COMMERCIAL PROJECT RESULTS

Bourron-Marlotte, France

Treated Product

Sample Date	COD of EXTRACT, mg/l
12 hrs after treatment*	1460
1/86	195
5/86	162
11/86	161
5/87	143

* TREATMENT STARTED 7/31/85

TABLE 5-5

UNTREATED IMPOUNDMENT SURFACE SLUDGE CHARACTERISTICS

PARAMETER	SOUTH POND	WEST POND
HEAT CONTENT (BTU/lb)	7,320	11,200[1]
MELTING POINT (°F)	>230	157
FLASHPOINT (°F)	>180	>200
ANTIMONY (mg/kg Sb)[2]	3.0	2.8
ARSENIC (mg/kg As)	4.3	3.4
BERYLLIUM (mg/kg Be)	<0.06	<0.06
CADMIUM (mg/kg Cd)	0.50	0.31
CHROMIUM (mg/kg Cr)	136	71
COPPER (mg/kg Cu)	250	50
LEAD (mg/kg Pb)	1,900	1,000
MERCURY (mg/kg Hg)	0.16	<0.01
NICKEL (mg/Kg Ni)	11.6	10.2
SELENIUM (mg/kg Se)	13	3.8
SILVER (mg/kg Ag)	<0.02	<0.02
THALLIUM (mg/kg Tl)	<2.0	<2.0
ZINC (mg/kg Zn)	395	276

[1] Sample would not ignite as recieved. In order to determine heat content ten percent of water was removed.

[2] All metals results are obtained from total digestion of the untreated material.

TABLE 5-6

UNTREATED IMPOUNDMENT BOTTOM SLUDGE CHARACTERISTICS

PARAMETER	SOUTH POND	WEST POND
OIL AND GREASE (mg/kg)	89,000	110,000
ANTIMONY (mg/kg Sb)[1]	<5	<5
ARSENIC (mg/kg As)	0.26	3
BARIUM (mg/kg Ba)	<1	28
BORON (mg/kg B)	<1.9	3.9
CADMIUM (mg/kg Cr)	<0.1	0.27
CHROMIUM (mg/kg Cd)	40	164
COPPER (mg/kg Cu)	630	560
LEAD (mg/kg Pb)	69	1,300
MERCURY (mg/kg Hg)	0.04	1.8
NICKEL (mg/kg Ni)	1.8	16
SELENIUM (mg/kg Se)	<1	<1
ZINC (mg/kg Zn)	27	107

[1] All metals results are obtained from total digestion of the untreated material.

Table 5-7 shows results from analysis of treated product from this plant for permeability. Tables 5-8 and 5-9 show TCLP results for moulded pellets and powder, respectively. The pellets were sized in accordance with sizing criteria for the TCLP procedure. Both powder and pellets were run to determine if there were any significant differences in the results for the hazardous organic constituents.

The reported lead values were very high because the specific sample treated contained a significantly higher concentration of lead than the impoundment as a whole, somewhat over 4,000 mg/kg. This is far greater than the impoundment lead concentration as an average. All other metals results were quite similar between the two samples.

It is important to note that the TCLP extractable organics were essentially all found to be present at levels below the detection limit for both pellets and powder. This shows that the fixation reactions are effective in chemically fixing the organics. If the process was only encapsulating the organics, the TCLP levels would have been higher for the powder compared to the pellets.

Tables 5-10 and 5-11 show total constituent analysis for the untreated and treated lube oil acid sludge from the commercial-scale demonstration test performed at a Midwest refinery. As previously discussed, around 400 cubic yards of this sludge was fixed by SRS during May 1987. Tables 5-12 and 5-13 show TCLP results for the untreated and treated sludge. The product tested was a dirt-like powder. Again, the process effectively fixed the organics that were present. Most were present at levels below the detection limit of the TCLP procedure.

As part of this demonstration project, an environmental monitoring program was performed by the SRS team. Air monitoring was performed for the three components of concern. These are volatile organics, sulfur dioxide, and hydrogen sulfide. Volatile organics were a concern due to the exothermic nature of the fixation reactions. Sulfur dioxide and hydrogen sulfide were of concern during excavation of the acid sludge from the pit.

Table 5-14 shows the results of full-shift monitoring using 3M OVA sample badges that were placed around the work area. Volatile organics were found to be present at less than their detection limits in all cases. Table 5-15 shows results of air sampling using hand-held equipment. Samples were taken during specific operations immediately adjacent to that operation in an attempt to determine the maximum releases that occurred.

The primary areas of concern were excavation of the sludge and mixing in the blending pit. On May 23, a series of readings were taken during excavation of the sludge using no

sulfur dioxide control techniques. In this case, the reported sulfur dioxide level was greater than 26 ppm. With the water spray properly positioned, the maximum level of sulfur dioxide and volatile organics found were less than 10 parts per million, and typically around 1.0 to 2.0 ppm.

The emission of volatile organics from the blending pit during the exothermic reaction was found to be typically around 1.0 to 2.0 ppm and always less than 10.0 ppm.

The SRS/EIF sludge fixation process offers the most proven fixation alternative to treat wastes that contain above 20% organics. If your organization is interested in testing this process, we will be pleased to treat a one-gallon sample at no charge. SRS is prepared to quote commercial-scale projects on a firm fixed price basis per volume of waste to be treated. There will be no change orders for unknown materials that are encountered. We are the only organization that can bid in this manner because we are the only organization that has processed over 200,000 cubic yards of oily sludge over a ten-year period.

TABLE 5-7

FOUNDATION TESTING LABORATORIES, INC.

CONSULTING, DESIGN AND TESTING SERVICES

414 West California Avenue
Ruston, Louisiana 71270
Phone (318) 255-7256

5/18/87

1813 Lois Lane
Bossier City, Louisiana 711
Phone (318) 747-0262

FILE NO. 8757/256

Description : Coefficient of Permeability CM/SEC

Project : S R S -- NO. 3 Moulded Pellets

Contractor :

Reported To : Pierre Matthys

NO. 3 MOULDED PELLETS	$< 1 \times 10^{-12}$ CM/SEC

TABLE 5-8

ENVIROMED
LABORATORIES, INC.

1874 DALLAS DRIVE
BATON ROUGE, LA. 70806
(504)-928-0233

TOXICITY CHARACTERISTIC CONTAMINANTS

EML Sample No. 79084

Service To: SRS
Address 1601 Armstrong Ave.
Irvin, CA 92714
Sample I.D. Moulded Pellets
Sample Type: Water Soil Sludge Other

Date Collected UNK By: Client Time UNK
Date Received 4-17-87 By: RC Time 0910
VOA GC/MS Analysis Date: 4-27-87
BNA GC/MS Analysis Date: 4-28-87
GC/ECD Analysis Date:

	CAS Number	Compound Name	Analysis Method	MDL mg/Kg	Concentration mg/L or mg/Kg
1.	107-13-1	Acrylonitrile	EPA 624	.100	ND
2.	71-43-2	Benzene	EPA 624	.010	ND
3.	111-44-4	Bis(2-Chloroethyl ether)	EPA 624	.010	ND
4.	75-15-0	Carbon Disulfide	EPA 624	.010	ND
5.	56-23-5	Carbon Tetrachloride	EPA 624	.010	ND
6.	108-90-7	Chlorobenzene	EPA 624	.010	ND
7.	67-66-3	Chloroform	EPA 624	.010	ND
8.	107-06-2	1,2-Dichloroethane	EPA 624	.010	ND
9.	75-35-4	1,1-Dichloroethylene	EPA 624	.010	ND
10.	75-09-2	Methylene Chloride	EPA 624	.010	ND
11.	78-93-3	Methyl Ethyl Ketone	EPA 624	.010	ND
12.	630-20-6	1,1,1,2-Tetrachloroethane	EPA 624	.010	ND
13.	79-34-5	1,1,2,2-Tetrachloroethane	EPA 624	.010	ND
14.	127-18-4	Tetrachloroethylene	EPA 624	.010	ND
15.	108-80-3	Toluene	EPA 624	.010	ND
16.	71-55-6	1,1,1-Trichloroethane	EPA 624	.010	ND
17.	79-00-5	1,1,2-Trichloroethane	EPA 624	.010	ND
18.	79-01-6	Trichloroethylene	EPA 624	.010	ND
19.	75-01-4	Vinyl Chloride	EPA 624	.010	ND
20.	78-83-1	Isobutanol	EPA 624	.100	ND
21.	110-86-1	Pyridine	EPA 624	.100	ND
22.	95-48-7	O-Cresol	EPA 625	.025	ND
23.	108-39-4	M-Cresol	EPA 625	.025	ND
24.	106-44-5	p-Cresol	EPA 625	.025	ND
25.	95-50-1	1,2-Dichlorobenzene	EPA 625	.010	ND
26.	106-46-7	1,4-Dichlorobenzene	EPA 625	.010	ND
27.	121-14-2	2,4-Dinitrotoluene	EPA 625	.010	ND
28.	118-74-1	Hexachlorobenzene	EPA 625	.010	ND
29.	87-68-3	Hexachlorobutadiene	EPA 625	.010	ND
30.	67-72-1	Hexachloroethane	EPA 625	.010	ND

TABLE 5-8 (Cont.)

	CAS Number	Compound Name	Analysis Method	MDL mg/Kg	Concentration mg/L or mg/Kg
31.	98-95-3	Nitrobenzene	EPA 625	.010	ND
32.	87-86-5	Pentachlorophenol	EPA 625	.025	ND
33.	108-95-2	Phenol	EPA 625	.025	0.04
34.	58-90-2	2,3,4,5-Tetrachlorophenol	EPA 625	.025	ND
35.	95-95-4	2,4,5-Trichlorophenol	EPA 625	.025	ND
36.	88-06-2	2,4,6-Trichlorophenol	EPA 625	.025	ND
37.	7-74-9	Chlordane	EPA 608	.005	ND
38.	94-73-7	2,4-D	EPA 615	.100	ND
39.	72-20-8	Endrin	EPA 608	.0002	ND
40.	76-44-8	Heptachlor	EPA 608	.0001	ND
41.	58-89-9	Lindane	EPA 608	.004	ND
42.	72-43-5	Methoxychlor	EPA 608	.010	ND
43.	8001-35-2	Toxaphene	EPA 608	.005	ND
44.	93-76-5	2,4,5-P Silvex	EPA 615	.010	ND
		METALS			
		Arsenic	SW/846-7060	.010	<0.01
		Barium	SW/846-7080	.010	0.77, 0.75
		Cadmium	SW/846-7130	.001	<0.001
		Chromium	SW/846-7190	.010	0.009
		Lead	SW/846-7420	.010	3.18
		Mercury	SW/846-7470	.002	<0.005
		Selenium	SW/846-7740	.010	<0.01
		Silver	SW/846-7761	.002	<0.002, <0.002

ND - None Detected (compound not detected above the method detection limit)
Comments:

DR Kamfield
Analyst(s)

Donald Lee Perry
Donald Lee Perry, Ph.D.
Technical Director

TABLE 5-9

ENVIROMED
LABORATORIES, INC.

1874 DALLAS DRIVI
BATON ROUGE, LA. 7080
[504]-928-023

JUN 198/

3341
m/5-13-87

TOXICITY CHARACTERISTIC CONTAMINANTS

EML Sample No. 79083

Service To: SRS
Address 1601 Armstrong Ave.
Irvin, CA 92714
Sample I.D. Brown Powder Sludge
Sample Type: Water Soil Sludge Other

Date Collected UNK By: Client Time UNK
Date Received 4-17-87 By: RC Time 0910
VOA GC/MS Analysis Date: 4-24-87
BNA GC/MS Analysis Date: 4-28-87
GC/ECD Analysis Date:

	CAS Number	Compound Name	Analysis Method	MDL mg/Kg	Concentration mg/L or mg/Kg
1.	107-13-1	Acrylonitrile	EPA 624	.100	ND
2.	71-43-2	Benzene	EPA 624	.010	ND
3.	111-44-4	Bis(2-Chloroethyl ether)	EPA 624	.010	ND
4.	75-15-0	Carbon Disulfide	EPA 624	.010	ND
5.	56-23-5	Carbon Tetrachloride	EPA 624	.010	ND
6.	108-90-7	Chlorobenzene	EPA 624	.010	ND
7.	67-66-3	Chloroform	EPA 624	.010	ND
8.	107-06-2	1,2-Dichloroethane	EPA 624	.010	ND
9.	75-35-4	1,1-Dichloroethylene	EPA 624	.010	ND
10.	75-09-2	Methylene Chloride	EPA 624	.010	ND
11.	78-93-3	Methyl Ethyl Ketone	EPA 624	.010	ND
12.	630-20-6	1,1,1,2-Tetrachloroethane	EPA 624	.010	ND
13.	79-34-5	1,1,2,2-Tetrachloroethane	EPA 624	.010	ND
14.	127-18-4	Tetrachloroethylene	EPA 624	.010	ND
15.	108-88-3	Toluene	EPA 624	.010	ND
16.	71-55-6	1,1,1-Trichloroethane	EPA 624	.010	ND
17.	79-00-5	1,1,2-Trichloroethane	EPA 624	.010	ND
18.	79-01-6	Trichloroethylene	EPA 624	.010	ND
19.	75-01-4	Vinyl Chloride	EPA 624	.010	ND
20.	78-83-1	Isobutanol	EPA 624	.100	ND
21.	110-86-1	Pyridine	EPA 624	.100	ND
22.	95-48-7	O-Cresol	EPA 625	.025	ND
23.	108-39-4	M-Cresol	EPA 625	.025	ND
24.	106-44-5	p-Cresol	EPA 625	.025	ND
25.	95-50-1	1,2-Dichlorobenzene	EPA 625	.010	ND
26.	106-46-7	1,4-Dichlorobenzene	EPA 625	.010	ND
27.	121-14-2	2,4-Dinitrotoluene	EPA 625	.010	ND
28.	118-74-1	Hexachlorobenzene	EPA 625	.010	ND
29.	87-68-3	Hexachlorobutadiene	EPA 625	.010	ND
30.	67-72-1	Hexachloroethane	EPA 625	.010	ND

ND = Not detetected (i.e. no compound detected above reported MDL's)

TABLE 5-9 (Cont.)

	CAS Number	Compound Name	Analysis Method	MDL mg/Kg	Concentration mg/L or mg/Kg
31.	98-95-3	Nitrobenzene	EPA 625	.010	ND
32.	87-86-5	Pentachlorophenol	EPA 625	.025	ND
33.	108-95-2	Phenol	EPA 625	.025	ND
34.	58-90-2	2,3,4,5-Tetrachlorophenol	EPA 625	.025	ND
35.	95-95-4	2,4,5-Trichlorophenol	EPA 625	.025	ND
36.	88-06-2	2,4,6-Trichlorophenol	EPA 625	.025	ND
37.	7-74-9	Chlordane	EPA 608	.005	ND
38.	94-73-7	2,4-D	EPA 615	.100	ND
39.	72-20-8	Endrin	EPA 608	.0002	ND
40.	76-44-8	Heptachlor	EPA 608	.0001	ND
41.	58-89-9	Lindane	EPA 608	.004	ND
42.	72-43-5	Methoxychlor	EPA 608	.010	ND
43.	8001-35-2	Toxaphene	EPA 608	.005	ND
44.	93-76-5	2,4,5-P Silvex	EPA 615	.010	ND
		METALS			
		Arsenic	SW/846-7060	.010	<0.01
		Barium	SW/846-7080	.010	0.7
		Cadmium	SW/846-7130	.001	<0.001
		Chromium	SW/846-7190	.010	0.014
		Lead	SW/846-7420	.010	5.36
		Mercury	SW/846-7470	.002	<0.002
		Selenium	SW/846-7740	.010	<0.01
		Silver	SW/846-7761	.002	<0.002

ND - None Detected (compound not detected above the method detection limit)
Comments:

DR Ussenfeld
Analyst(s)

Donald Lee Perry
Donald Lee Perry, Ph.D.
Technical Director

TABLE 5-10

UNTREATED ACID SLUDGE TOTAL CONSTITUENT CONCENTRATIONS

HAZARDOUS CONSTITUENT	CONCENTRATION, mg/Kg
VOLATILES	
BENZENE	TR
ETHYL BENZENE	TR-0.76
TOLUENE	0.79-1.5
TOTAL XYLENES	3.2-7.0
2-HEXANONE	1.9-2.8
SEMI-VOLATILES	
2-METHYLNAPHTHALENE	29-45
PHENANTHRENE	28-79
PYRENE	22-48
BENZO(A)ANTHRACENE	ND
CHRYSENE	57-150
MAJOR FRACTIONS, %	
OIL	27.9-38.7
WATER	9.8-18.5
SOLIDS	53.6-57.2

ND = Not Detected
TR = Trace

TABLE 5-11

TREATED ACID SLUDGE TOTAL CONSTITUENT CONCENTRATIONS

HAZARDOUS CONSTITUENT	CONCENTRATION, mg/Kg
VOLATILES	
ETHYL BENZENE	0.037-0.65
TOLUENE	0.07-0.18
TOTAL XYLENES	0.03-0.49
2-HEXANONE	ND
ACETONE	0.25-1.2
2-BUTANONE	0.25-0.59
SEMI-VOLATILES	
2-METHYLNAPHTHALENE	9.5-18
PHENANTHRENE	9-34
PYRENE	9.4-22
BENZO(A)ANTHRACENE	ND-11
CHRYSENE	19-56
BENZO(B)FLUORANTHENE	ND-12
BENZO(A)PYRENE	ND-17

ND = Not Detected
TR = Trace

TABLE 5-12

UNTREATED ACID SLUDGE TCLP EXTRACT

HAZARDOUS CONSTITUENT	CONCENTRATION, mg/l
VOLATILES	
BENZENE	ND-TR
ETHYL BENZENE	ND-TR
TOLUENE	TR-0.027
TOTAL XYLENES	0.026-0.046
2-HEXANONE	TR-0.064
SEMI-VOLATILES	
2-METHYLNAPHTHALENE	0.005-0.012
PHENANTHRENE	0.003
PYRENE	ND
BENZO(A)ANTHRACENE	ND
CHRYSENE	ND
PHENOL	ND
2-METHYLPHENOL	ND-0.016
4-METHYLPHENOL	ND
2,4 DIMETHYLPHENOL	ND-0.029

ND = Not Detected
TR = Trace

TABLE 5-13

TREATED ACID SLUDGE TCLP EXTRACT

HAZARDOUS CONSTITUENT	CONCENTRATION, mg/l
VOLATILES	
BENZENE	ND
ETHYL BENZENE	ND
TOLUENE	ND
TOTAL XYLENES	ND
2-HEXANONE	ND
SEMI-VOLATILES	
2-METHYLNAPHTHALENE	ND-TR
PHENANTHRENE	ND
PYRENE	ND
BENZO (A) ANTHRACENE	ND
CHRYSENE	ND
PHENOL	TR-0.024
2-METHYLPHENOL	ND-TR
4-METHYLPHENOL	TR
2-4 DIMETHYLPHENOL	ND-0.024

ND = Not Detected
TR = Trace

TABLE 5-14

"FULL-SHIFT" 3M OVA SAMPLE BADGE ANALYTICAL RESULTS

DATE	BADGE NO.	START TIME	STOP TIME	SAMPLING TIME(min.)	USE	WEIGHT (mg) BENZENE	WEIGHT (mg) TOULENE	WEIGHT (mg) XYLENE	CONCENTRATION (mg/m3) BENZENE	CONCENTRATION (mg/m3) TOULENE	CONCENTRATION (mg/m3) XYLENE	CONCENTRATION (ppm) BENZENE	CONCENTRATION (ppm) TOULENE	CONCENTRATION (ppm) XYLENE
5/21/87	5167	1030	1920	530	Personnel	<10.000	<10.000	<10.000	<0.552	<0.571	<0.645	<0.163	<0.152	<0.149
"	5095	1030	1920	530	"	<10.000	<10.000	<10.000	<0.522	<0.571	<0.645	<0.163	<0.152	<0.149
"	5222	1450	1920	270	"	<10.000	<10.000	<10.000	<1.024	<1.122	<1.267	<0.321	<0.298	<0.292
"	5127	1450	1940	270	"	<10.000	<10.000	<10.000	<1.024	<1.122	<1.267	<0.321	<0.298	<0.292
"	5016	1450	1940	290	"	<10.000	<10.000	<10.000	<0.953	<1.044	<1.180	<0.299	<0.278	<0.272
"	9914	1450	1920	270	"	<10.000	<10.000	<10.000	<1.024	<1.022	<1.267	<0.321	<0.298	<0.292
"	9910	1450	1920	270	"	<10.000	<10.000	<10.000	<1.024	<1.122	<1.267	<0.321	<0.298	<0.292
"	9873	1500	1920	260	"	<10.000	<10.000	<10.000	<1.063	<1.065	<1.316	<0.333	<0.310	<0.304
"	9989	1500	1945	285	"	<10.000	<10.000	<10.000	<0.970	<1.063	<1.200	<0.304	<0.283	<0.277
5/22/87	2502	0700	1600	480	"	<10.000	<10.000	<10.000	<0.576	<0.631	<0.713	<0.180	<0.168	<0.165
"	2778	0700	1600	480	"	<10.000	<10.000	<10.000	<0.576	<0.631	<0.713	<0.180	<0.168	<0.165
"	9745	0700	1600	540	"	<10.000	<10.000	<10.000	<0.512	<0.561	<0.633	<0.160	<0.149	<0.146
"	9867	0700	1600	555	"	<10.000	<10.000	<10.000	<0.498	<0.460	<0.616	<0.156	<0.145	<0.142
"	9967	0700	1600	560	"	<10.000	<10.000	<10.000	<0.494	<0.541	<0.611	<0.155	<0.144	<0.141
"	2362	0700	1600	480	"	<10.000	<10.000	<10.000	<0.576	<0.631	<0.713	<0.180	<0.168	<0.165
"	2333	0700	1750	650	"	<10.000	<10.000	<10.000	<0.425	<0.466	<0.526	<0.133	<0.124	<0.121
"	2658	0700	1600	540	"	<10.000	<10.000	<10.000	<0.512	<0.561	<0.633	<0.160	<0.149	<0.146
"	2381	0700	1600	540	"	<10.000	<10.000	<10.000	<0.512	<0.561	<0.633	<0.160	<0.149	<0.146
"	9747	0700	1625	565	"	<10.000	<10.000	<10.000	<0.489	<0.536	<0.605	<0.153	<0.143	<0.140
"	2504	1100	1900	480	Site #1	<10.000	<10.000	<10.000	<0.576	<0.631	<0.753	<0.180	<0.168	<0.165
"	2742	1100	1900	480	" #2	<10.000	<10.000	<10.000	<0.576	<0.761	<0.713	<0.180	<0.168	<0.165
"	2768	1100	1900	480	" #3	<10.000	<10.000	<10.000	<0.576	<0.631	<0.713	<0.180	<0.168	<0.165
"	2649	1100	1900	480	" #4	<10.000	<10.000	<10.000	<0.576	<0.631	<0.713	<0.180	<0.168	<0.165
"	2583	1100	1900	480	" #5	<10.000	<10.000	<10.000	<0.576	<0.631	<0.713	<0.180	<0.168	<0.165
"	2620	1100	1900	480	" #6	<10.000	<10.000	<10.000	<0.576	<0.631	<0.713	<0.180	<0.168	<0.165
5/23/87	2641	0745	1420	395	" #1	<10.000	<10.000	<10.000	<0.700	<0.767	<0.866	<0.219	<0.204	<0.200
"	2575	0745	1420	395	" #2	<10.000	<10.000	<10.000	<0.700	<0.767	<0.866	<0.219	<0.204	<0.200
"	2566	0745	1420	395	" #3	<10.000	<10.000	<10.000	<0.700	<0.767	<0.866	<0.219	<0.204	<0.200
"	2380	0745	1420	395	" #4	<10.000	<10.000	<10.000	<0.700	<0.767	<0.866	<0.219	<0.204	<0.200
"	2436	0745	1420	395	" #5	<10.000	<10.000	<10.000	<0.700	<0.767	<0.866	<0.219	<0.204	<0.200
"	2788	Badge lost		-	" #6	-	-	-	-	-	-	-	-	-
"	2474	-	-	0	Blank	0	0	0	0	0	0	0	0	0
5/24/87	2701	0715	1545	510	Site #4	<10.000	<10.000	<10.000	<0.542	<0.594	<0.671	<0.170	<0.158	<0.155
"	2469	0715	1545	510	" #5	<10.000	<10.000	<10.000	<0.542	<0.594	<0.671	<0.170	<0.158	<0.155
"	2432	0715	1545	510	" #6	<10.000	<10.000	<10.000	<0.542	<0.594	<0.671	<0.170	<0.158	<0.155

FMK103

TABLE 5-15
AIR SAMPLING RESULTS

DATE	TIME	SAMPLER	LOCATION	PROCESS	CONTAMINANT MEASURED	INSTRUMENTATION	READING (PPM)
5/19	0710	DGK	o Trailer o Small Acid Pit o Blend Pits	Background & Blend Pit Excavation	VO's	Photovac-PID	2.0 5.0 2.7-5.4
5/19	0735	RJS	o Trailer o Small Acid Pit o Blend Pits	Background & Blend Pit Excavation	VO's	Foxboro-FID	>1.0 1.0-2.0 500(1)
5/19	0800	RJS	o Trailer o Small Acid Pit o Blend Pits	Background	VO's	Photovac-PID Foxboro-FID	PID FID 0.5-1.5 <1.0 2.2-3.0 2.0 1.2-4.4 1.0-3.0
5/19	0800	DGK	o Blend Pits	Background	SO_2 H_2S	Drager + SO_2 0,5/1 H_2S 0.5/a	0.5 SO_2 0.0 H_2S
5/19	0835	RJS	o Trailer o Small Acid Pit o Blend Pits	Background		Photovac-PID Foxboro-FID	PID FID 0.5 <1.0 0.8-1.2 <1.0 0.8-1.5 1.0-2.0
5/19	1052	RJS	o Deposition Pond	Excavation Pond by OHM	VO's	Photovac-PID	1.0-3.8
5/19	1052	DGK	o Deposition Pond	Excavation Pond by OHM	SO_2	Drager & SO_2 0,5/a	0.0-0.25 SO_2
5/19	1223	DGK	o Trailer o Small Acid Pit o Blend Pits	Background	VO's	Photovac-PID	2.0 0.6 0.5
5/19	1340	RJS	o Trailer o Small Acid Pit o Blend Pits	Background	VO's	Photovac-PID	0.3 0.9 0.8
5/19	1506	DGK	o Trailer o Small Acid Pit o Blend Pits	Background	SO_2	Drager & SO_2 0,5/a	0.0 SO_2 0.0 SO_2 0.0 SO_2
5/19	1625	RJS	o Trailer o Small Acid Pit o Blend Pits	Background	VO's	Photovac-PID	0.6 1.0 0.5

(1) Believed to be methane excavation encountered wood, flooring materials, etc.

TABLE 5-15 (Cont'd)
AIR SAMPLING RESULTS

DATE	TIME	SAMPLER	LOCATION	PROCESS	CONTAMINANT MEASURED	INSTRUMENTATION	READING (PPM)
5/20	0645	RJS	o Trailer o Small Acid Pit o Blend Pits	Background	VO's	Photovac-PID Foxboro-FID	PID FID 0.2 0.2 0.2 0.2
5/20	1055	RJS	o Trailer o Small Acid Pit o Blend Pits	Background	VO's	Photovac-PID	0.3 0.3 0.3
5/20	1300	RJS	o Trailer o Small Acid Pit o Blend Pits	Background	VO's	Photovac-PID	0.6 0.2 0.2
5/20	1300	DGK	o Trailer o Small Acid Pit	Background	SO_2	Drayer & SO_2 0,5/a	0.0 SO_2 0.0 SO_2 0.0 SO_2
5/20	1645	RJS	o Small Acid Pit o Blend Pits	Placement of Sludge into Blend Pits	VO's	Photovac-PID Foxboro-FID	PID FID 0.2 0.2 0.2 0.2
5/20	1645	DGK	o Small Acid Pit o Blend Pits	Placement of Sludge into Blend Pits	SO_2 H_2S	Photovac-PID Foxboro-FID	PID FID 0.0-0.4 0.0-0.4 0.0-0.4 0.0-0.4
5/20	1745	DGK	o Small Acid Pit o Blend Pits	Placement of Sludge into Blend Pits	SO_2 H_2S	Drayer & SO_2 0,5/a H_2 0.5/a	0.0 SO_2 0.0 H_2S 0.0 SO_2 0.0 H_2S
5/21	0745	DGK	o Small Acid Pit	Excavation of Sludge w/Water Spary	VO's	Photovac-PID	1.0-5.5
5/21	0745	DGK	o Small Acid Pit	Excavation of Sludge w/Water Spray	SO_2 H_2S	Drayer & SO_2 0,5/a H_2S	>5.0 N=5 0.0
5/21	0745	DGK	Hot Line Downwind of Small Acid Pit	Excavation of Sludge w/Water Spray	SO_2 H_2S	Drayer & SO_2 0,5/a H_2S 0.5/a	>3.0 N=5 0.0
5/21	1000	DGK	o Small Acid Pit	No Process-at Excavated Pile in Pit	VO's	Foxboro-FID	0.1

TABLE 5-15 (Cont'd)
AIR SAMPLING RESULTS

DATE	TIME	SAMPLER	LOCATION	PROCESS	CONTAMINANT MEASURED	INSTRUMENTATION	READING (PPM)
5/21	1000	DGK	o Small Acid Pir	No Process-at Excavated Pile at Pit	SO_2	Drager & SO_2 0,5/a	0.0
5/21	1145	RJS	o Blend Pit	Mixing of Sludge w/Quicklime	VO's	Foxboro-FID	1.0-2.0
5/21	1145	DGK	o Blend Pit	Mixing of Sludge w/Quicklime	SO_2	Drager & SO_2 0, S/a	0.0
5/21	1220	DGK	o Blend Pit	Mixing of Sludge w/Quicklime	VO's	Foxboro-FID	1.0-2.0
5/21	1220	DGK	o Blend Pit	Mixing of Sludge w/Quicklime Blend Pits	SO_2	Drager & SO_2 0,5/a	0.0
5/21	1510	RJS	o Blend Pit	Reprocess Sludge Batches 2 & 3 w/Quicklime	VO's	Foxboro-FID	1.0-7.0
5/21	1510	DGK	o Blend Pits o Blend Pits	Reprocess Sludge Batches 2 & 3 w/Quicklime	SO_2 H_2S	Drager & SO_2 0,5/a H_2 0.5/a	0.0 SO_2 0.0 H_2S
5/21	1600	DGK	o Blend Pits	Mixing of Sludge w/Lime Slurry ($Ca(ON)_2$)	SO_2 H_2S	Drager & SO_2 0,5/a H_2S 0.2/a	1.0 SO_2 0.0 H_2S
5/21	1620	DGK	o Blend Pits	Placement of Sludge into Blend Pits	SO_2 H_2S	Drayer & SO_2 0,5/a H_2S 0.5/a	0.0 SO_2 0.0 H_2S
5/21	1640	DGK	o Blend Pits	Mixing of Sludge w/Lime Slurry ($Ca(ON)_2$)	SO_2 H_2S	Drager & SO_2 0,5/a H_2S 0.5/a	0.0 SO_2 0.0 H_2S
5/21	1700	DGK	o Blend Pits	Mixing of Sludge w/Quicklime	SO_2 H_2S	Drager & SO_2 0,5/a H_2S 0.5/a	1.0 SO_2 0.0 H_2S

TABLE 5-15 (Cont'd)
AIR SAMPLING RESULTS

DATE	TIME	SAMPLER	LOCATION	PROCESS	CONTAMINANT MEASURED	INSTRUMENTATION	READING (PPM)
5/21	1700	DGK	o Blend Pits	Mixing of Sludge w/Quicklime	VO's	Foxboro-FID	1.0-7.0
5/21	1830	RJS	o Blend Pit	Mixing of Sludge w/Quicklime	VO's	Foxboro-FID	0.5-8.0
5/21	1830	DGK	o Blend Pit	Mixing of Sludge w/Quicklime	SO_2	Drager & SO_2 0, 5/a H_2S 0.5/a	0.0
5/22	0800	DGK	o Blend Pit	Reprocessing of 1st 3 Batches w/Quicklime	SO_2	Drager & SO_2 0,5/a H_2S 0.5/a	0.0
5/22	0800	DGK	o Blend Pit	Reprocessing of 1st 3 Batches w/Quicklime	VO's	Foxboro-FID	0.1-1.5
5/22	0900	DGK	o Blend Pit	Placement of Sludge into Blend Pits	VO's	Foxboro-FID	0.0
5/21	0920	RJS	o Blend Pits	Mixing of Sludge w/Lime Slurry	VO's	Foxboro-FID	0.5
5/22	0940	RJS	o Blend Pits	Mixing of Sludge w/Quicklime	VO's	Foxboro-FID	0.5-1.5
5/22	1050	DGK	o Blend Pits	Placement of Sludge into Blend Pits	VO's SO_2	Foxboro-FID Drager & SO_2 0,5/a	0.0 0.0 SO_2
5/22	1110	DGK	o Blend Pits	Mixing of Sludge w/Lime Slurry	VO's SO_2	Foxboro-FID Drager & SO_2 0,5/a	0.0 0.0 SO_2
5/22	1130	DGK	o Blend Pits	Mixing of Sludge w/Quicklime	VO's SO_2	Foxboro-FID Drager & SO_2 0,5/a	0.5 0.0 SO_2

TABLE 5-15 (Cont'd)
AIR SAMPLING RESULTS

DATE	TIME	SAMPLER	LOCATION	PROCESS	CONTAMINANT MEASURED	INSTRUMENTATION	READING (PPM)
5/21	1700	DGK	o Blend Pits	Mixing of Sludge w/Quicklime	VO's	Foxboro-FID	1.0-7.0
5/21	1830	RJS	o Blend Pit	Mixing of Sludge w/Quicklime	VO's	Foxboro-FID	0.5-8.0
5/21	1830	DGK	o Blend Pit	Mixing of Sludge w/Quicklime	SO_2	Drager & SO_2 0, 5/a H_2S 0.5/a	0.0
5/22	0800	DGK	o Blend Pit	Reprocessing of 1st 3 Batches w/Quicklime	SO_2	Drager & SO_2 0,5/a H_2S 0.5/a	0.0
5/22	0800	DGK	o Blend Pit	Reprocessing of 1st 3 Batches w/Quicklime	VO's	Foxboro-FID	0.1-1.5
5/22	0900	DGK	o Blend Pit	Placement of Sludge into Blend Pits	VO's	Foxboro-FID	0.0
5/21	0920	RJS	o Blend Pits	Mixing of Sludge w/Lime Slurry	VO's	Foxboro-FID	0.5
5/22	0940	RJS	o Blend Pits	Mixing of Sludge w/Quicklime	VO's	Foxboro-FID	0.5-1.5
5/22	1050	DGK	o Blend Pits	Placement of Sludge into Blend Pits	VO's SO_2	Foxboro-FID Drager & SO_2 0,5/a	0.0 0.0 SO_2
5/22	1110	DGK	o Blend Pits	Mixing of Sludge w/Lime Slurry	VO's SO_2	Foxboro-FID Drager & SO_2 0,5/a	0.0 0.0 SO_2
5/22	1130	DGK	o Blend Pits	Mixing of Sludge w/Quicklime	VO's SO_2	Foxboro-FID Drager & SO_2 0,5/a	0.5 0.0 SO_2

TABLE 5-15 (Cont'd)
AIR SAMPLING RESULTS

DATE	TIME	SAMPLER	LOCATION	PROCESS	CONTAMINANT MEASURED	INSTRUMENTATION	READING (PPM)
5/22	1500	DGK	o Blend Pits	Mixing of Sludge w/Quicklime	VO's SO_2	Foxboro-FID Drager & SO_2 0,5/a	0.0 0.0 SO_2
5/22	1530	DGK	o Product Pile of Processed Sludge	No Process	VO's SO_2	Foxboro-FID Drager & SO_2 0,5/a	0.5 0.0 SO_2
5/22	1545	DGK	o Blend Pit	Placement of Sludge into Blend Pits	VO's SO_2	Foxboro-FID Drager & SO_2 0,5/a	0.0 0.0
5/22	1730	RJS DGK	o Small Acid Pit at Excavated Area	No Process	VO's SO_2 H_2S	Photovac-PID Drager & SO_2 0,5/a H_2S 0.5/a	0.5-2.2 0.0 SO_2 0.0 H_2S
5/22	1730	RJS	o Small Acid Pit at 3M Monitoring Stations #'s 1,2&3	No Process	VO's	Photovac	#1 0.5 #2 0.3 #3 0.1
5/22	1800	RJS DGK	o Blend Pit	Mixing of Sludge w/Quicklime Blend Pits	VO's SO_2	Photovac-PID Drager & SO_2 0,5/a	0.0 0.0
5/23	0730	DGK	o Small Acid Pit	Excavation of Sludge w/o Water Spray	VO's SO_2	Photovac-PID Drager & SO_2 0,5/a	3.0-5.0 725.0 SO_2
				Excavation of Sludge w/Water Spray Curtain	VO's SO_2	Foxboro-FID Drager & SO_2 0,5/a	3.0-5.0 >25.0 SO_2
				Excavation of Sludge (Adjusted Rate-Slower) Repositioned Spray in Bucket	VO's SO_2	Photovac-PID Drager & SO_2 0,5/a	3.0-5.0 >3.0 SO_2
5/23	0850	DGK	o Blend Pits	Mixing of Sludge w/Quicklime	VO's	Foxboro-FID	0.2-1.5
5/23	1025	DGK	o Blend Pits	Mixing of Sludge w/Lime Slurry	VO's SO_2	Foxboro-FID Drager & SO_2 0,5/a	0.0 0.0 SO_2
				Mixing of Sludge w/Quicklime	VO's SO_2	Foxboro-FID Drager & SO_2 0,5/a	0.0-1.0 0.0 SO_2

6.0 SRS/EIF FIXED PRODUCT TESTING

6.1 INTRODUCTION

In May 1987, the SRS/EIF Oily Sludge Fixation Process was demonstrated at the Sand Springs Petrochemical Complex in Sand Springs, Oklahoma. Approximately 400 cubic yards of lube oil acid sludge was treated. Samples of the treated product from that site have been collected and tested in the SRS Analytical Laboratory. The samples have been tested for unconfined compressive strength and for liquid release under pressure. This report presents the results of these tests.

6.2 UNCONFINED COMPRESSIVE STRENGTH

A series of tests have been conducted to measure the unconfined compressive strength of compacted samples of the fixed product from the Sand Springs demonstration. ASTM procedure D-1557, Standard Test Methods for Moisture-Density Relations of Soils and Soil-Aggregate Mixtures Using 10-lb Rammer and 18-in. Drop, was followed for the preparation of the compacted sample. ASTM D-2166, Standard Test Method for Unconfined Compressive Strength of Cohesive Soil, was followed for the measurement of the unconfined compressive strength. This section briefly describes the testing apparatus and procedure, and discusses the results of those tests.

6.3 APPARATUS

Two types of apparatus are used to perform this test. The first apparatus is the soil compaction unit. It is used to prepare a compacted sample. The compacted sample is then inserted into the compressive strength unit and the unconfined compressive strength is measured.

The soil compaction apparatus was constructed and operated according to the procedures outlined in ASTM D-1557. It consists of a metallic cylindrical mold two inches in diameter. The mold attaches to a base plate assembly and an extension collar assembly. The sample is compacted with a manual rammer. The rammer is equipped with a guide sleeve which provides sufficient clearance so that the free fall of the rammer shaft and head will not be restricted. The rammer weight is ten pounds and can fall freely through a distance of 18 inches.

The unconfined compressive strength measurements are conducted with an apparatus constructed following the guidelines in ASTM D-2166. It consists of a compression device equipped with a screw jack activated load yoke. The total compressive force is measured with a dial indicator. Deformation indicators are also provided to measure axial and radial deformation while the sample is under a compressive load.

6.4 TEST PROCEDURE

A compacted sample is prepared to the sample specifications in ASTM D-2166 following the compaction procedures outlined in ASTM D-1557. The sample should have a height-to-three diameter ratio of 2 to 2.5. The sample is compacted in layers. The first two layers generally received 10 blows from the rammer which was dropped from a height of 18 inches. The final layer receives 25 blows, also dropped from 18 inches.

The compacted sample is carefully removed from the compaction mold and placed in the compressive strength apparatus. A load is applied to produce an axial strain of 1/2 to 2 percent per minute. The rate of strain should be chosen so that the time to failure does not exceed about 15 minutes. Loading is continued until the load values decrease with increasing strain or until 15 percent axial strain is reached. Axial strain is defined as the change in the length of the sample divided by the original sample length.

6.5 DISCUSSION OF RESULTS

The results for the unconfined compressive strength of the fixed material from the Sand Springs Petrochemical Complex is shown in the table below.

Test Number	Moisture Content Wt. %	Compressive Strength psi	Axial Strain Percent
1	15.3	73.2	5.0
2	22.0	12.7	11.0
3	17.9	38.2	11.0
4	16.6	54.1	7.0
5	16.4	50.9	5.9
6	15.6	71.6	5.8
7	15.2	79.6	5.3
8	14.8	79.6	5.4
9	14.6	71.6	4.1
10	15.0	71.6	5.9
11	15.0	87.5 (1)	6.0
12	15.4	71.6	5.6
13	15.4	87.5 (2)	5.7
14	12.3	63.7	2.7

(1) Measured 18 hrs. after compaction
(2) Measured 20 hrs. after compaction

Figure 6-1 presents these results in graphical form. Tests 11 and 13 are not included on Figure 6-1 because the compressive strength was measured after a several hour delay. All of the other tests were made immediately after the compacted sample was prepared.

FIGURE 6-1

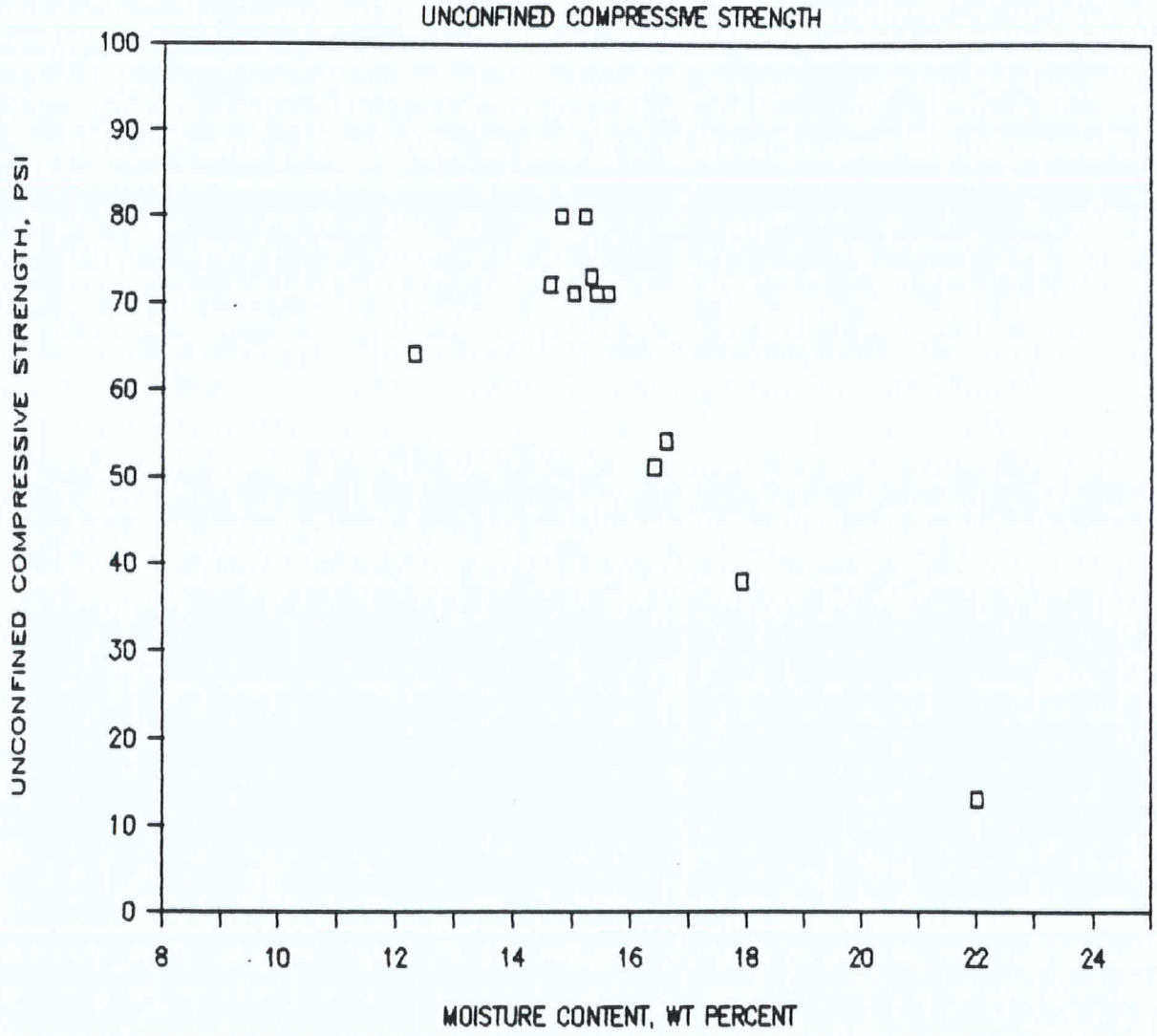
UNCONFINED COMPRESSIVE STRENGTH
UNCONFINED COMPRESSIVE STRENGTH, PSI
100
90
80
70
60
50
40
30
20
10
0
8
10
12
14
16
18
20
22
24
MOISTURE CONTENT, WT PERCENT

The unconfined compressive strength is a strong function of the moisture content of the material. The strength for this material reaches a maximum at approximately 15 weight percent moisture and drops off rapidly as the moisture content increases. In all cases, the sample broke before the limit of 15 percent axial strain was reached.

The maximum axial strain increases with increasing moisture content. This is graphically shown in Figure 6-2. Unlike the unconfined compressive strength, the axial strain does not go through a maximum as the moisture content increases.

Tests 11 and 13 show the effect of time on the compressive strength. For test 11, the unconfined compressive strength test was run 18 hours after the sample was compacted. The sample was stored at ambient conditions in an air-tight environment so that no moisture was loss between sample preparation and sample testing. This sample shows an increase of 15.9 psi in the compressive strength. Test 13 confirms these results.

6.6 LIQUID RELEASE TEST

A sample of the material from the Sand Springs Petrochemical Complex has been subjected to the Liquid Release Test. The purpose of the test is to indicate whether or not liquids can be released from sorbents when exposed to landfill pressures. A sample of material is placed in a device capable of simulating landfill pressures. An absorptive filter paper is placed on both ends of the sample. It is separated from the sample by a perforated teflon disk. A compressive force is applied to the sample. Release of liquid is indicated when the weight of accumulated moisture on the filter papers exceeds 0.5 percent of the weight of the sample tested.

6.7 APPARATUS

Figure 6-3 shows a schematic diagram of the liquid release test apparatus. It consists of a cylindrical chamber which holds the sample. It contains two perforated teflon disks which are 0.8 mm thick and perforated with 1 mm diameter holes approximately 5 mm apart. The device contains a vertical load piston which transfers the compressive force to the sample. This apparatus fits into the unconfined compressive strength apparatus which is used to supply and measure the compressive force.

6.8 TEST PROCEDURE

The test procedure consists of placing a 100-gram sample in the test apparatus. The sample is placed between the perforated teflon disks. Preweighed Whatman 90 mm filter paper is placed on the side of each teflon disk opposite from the sample. The test apparatus is positioned in the unconfined compressive

FIGURE 6-2

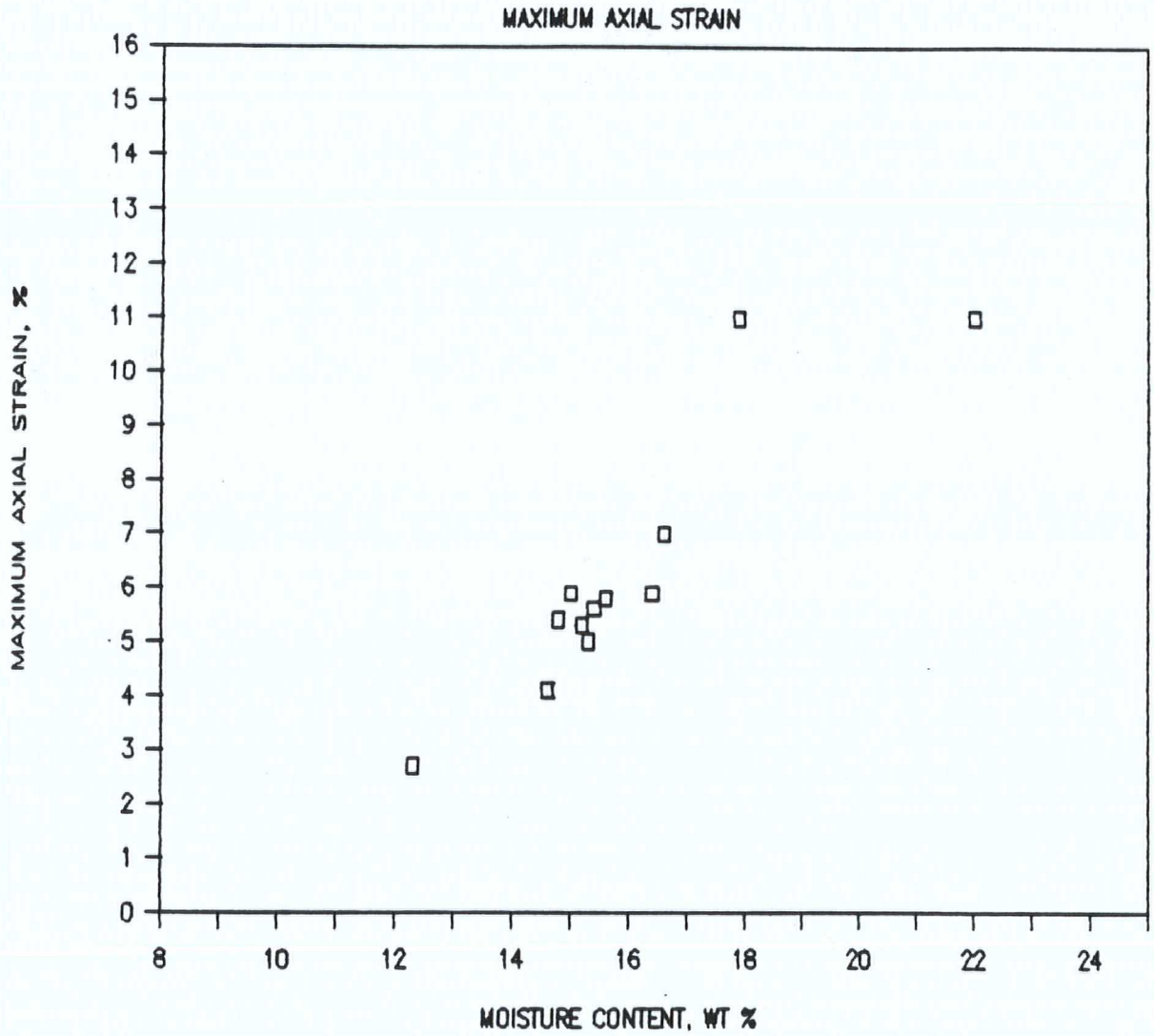
MAXIMUM AXIAL STRAIN
MAXIMUM AXIAL STRAIN, %
MOISTURE CONTENT, WT %
0
1
2
3
4
5
6
7
8
9
10
11
12
13
14
15
16
8
10
12
14
16
18
20
22
24

FIGURE 6-3

LIQUID RELEASE TEST APPARATUS

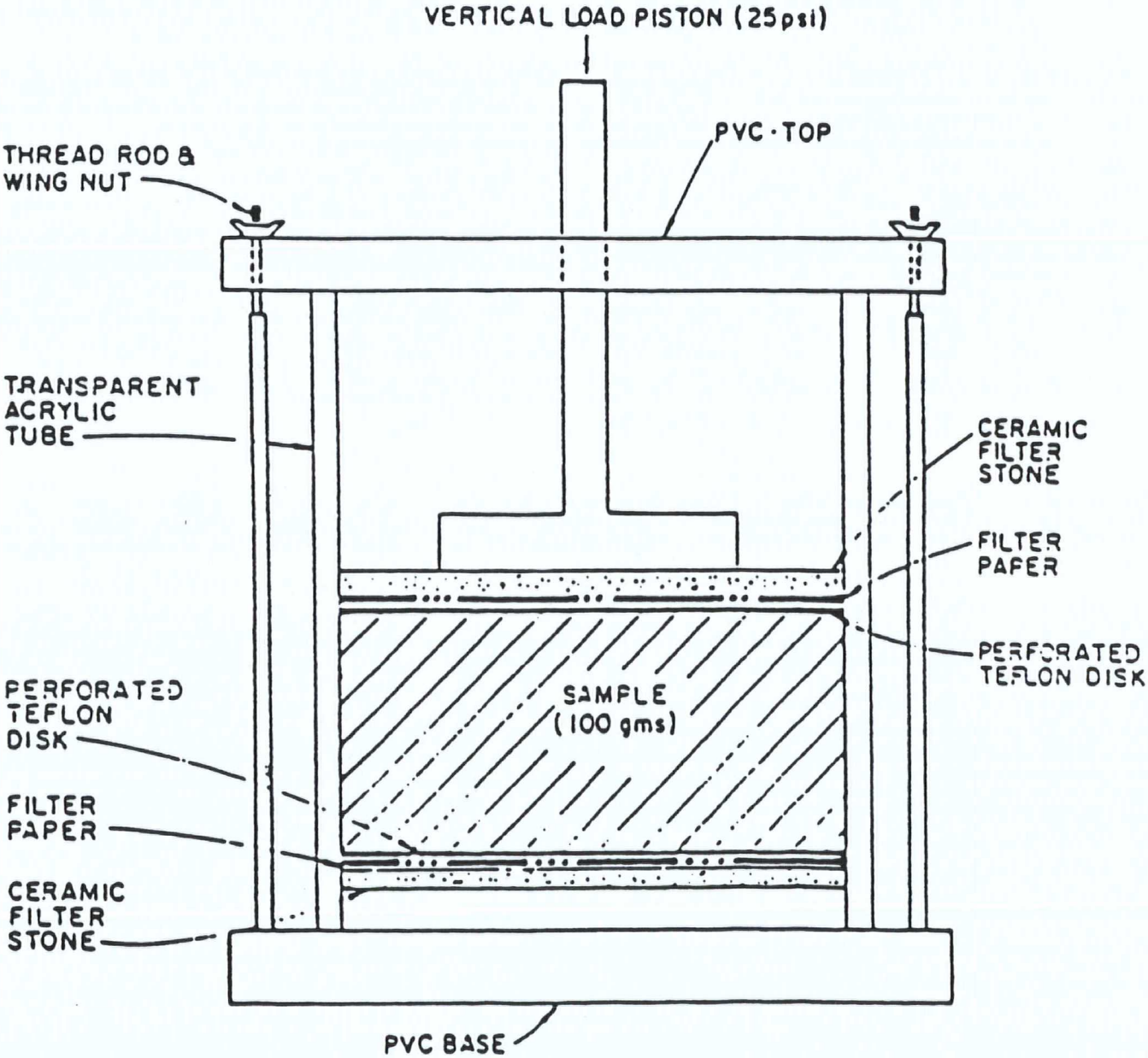

strength apparatus and a compressive force is applied to the vertical load piston. The sample is held under pressure for 30 minutes. At the end of 30 minutes, the pressure is released and the unit is disassembled. The filter papers are removed and weighed to determine the amount of moisture that was absorbed.

6.9 DISCUSSION OF RESULTS

The Liquid Release Test has been performed on a sample of fixed material from the Sand Springs Petrochemical Complex. The sample had a moisture content of 15.38 weight percent. This is approximately the optimum moisture content for maximum unconfined compressive strength of this material. The sample was held under a compressive force of 25 psi for 30 minutes. The weight gain of the filter papers was 0.32 grams or 0.32 percent of the sample weight which is below the criterion of 0.5 percent of the sample weight. Thus no release of moisture was indicated.

Next, the test was repeated with the same material and the same filter papers; however, the sample was held under a compressive force of 50 psi for 30 minutes. The weight gain of the filter papers this time was 0.35 grams or 0.35 weight percent of the sample. Again, this is below the standard of 0.5 percent of the sample and thus no release of moisture was indicated.

6.10 CONCLUSIONS

These results indicate that high unconfined compressive strengths are achievable with the product from the SRS/EIF Oily Sludge Fixation Process. Unconfined compressive strengths as high as 79.6 psi have been measured immediately after compaction. Strengths as high as 87.5 psi have been measured 18 to 20 hours after compaction indicating that the unconfined compressive strength increases with time.

These results also indicate that the unconfined compressive strength is a strong function of the moisture content of the material. The strength may increase as much as 60 percent with a two percent reduction of moisture content. The maximum axial strain is also strongly affected by the moisture content of the material.

The material with a 15.38 weight percent moisture content will pass the Liquid Release Test even at pressures as high as 50 psi. Liquid release tests are currently being carried out at higher moisture contents to further define the ability of this material to retain its water.

VOC. CONTROL

For the oily sludge containing high levels of volatile organics, SRS will be using totally enclosed blending equipment which will control the vapor emission generated during The Exothermic Reaction through a Vapor Recovery System.

The Vapor Recovery System will have the possibility of condensating 99.90% of the VOC'S, using a two-stage cooling system capable of dropping the temperature down to zero degrees F., if necessary. The remaining volatile organic vapors will be treated with a conventional charcoal system.

Prior to deciding if a totally enclosed system has to be used, SRS conducts laboratory testing. 500 grams of sludge is treated at The SRS Laboratory and a sample of vapors produced during the highest peak of The Exothermic Reaction is taken for Volatile Organic Content Analysis.

The very strong exothermal reaction, which is characteristic of The SRS/EIF Fixation Stabilization/Solidification Process causes evaporation of the light volatile organics.