Ahtna Engineering Services, LLC
110 W. 38th St. Suite 200A
Anchorage, AK 99503
www.ahtnaes.com
Phone: 907.646.2969; Fax: 907.561.5475

July 29, 2014

Mr. Bryan Chernick, Response Manager
Environmental Quality Management, Inc.
18939 120th Avenue NE, Suite 103
Bothell, Washington 98011
bchernick@eqm.com

Subject: Cost Proposal Modification for Fan Installation
Vapor Intrusion Mitigation Services
4th and Gambell Site – Anchorage, Alaska

Dear Mr. Chernick:

Ahtna Engineering Services, LLC (AES) is pleased to provide Environmental Quality Management, Inc. (EQ) with this cost proposal for modification to the above-referenced project. This modification of the system design for the installation of fans in two buildings was requested by EQ via email on Tuesday, July 15, 2014 due to the elevated levels of vapors remaining after installation of passive vapor mitigation systems.

This modification proposes to add two fans each to the North Duplex and the building at 720 E. Third Ave. Costs are included to purchase, install, and hook up electrical power from the homeowners' circuit boxes. Also included is a round of vapor sampling after installation of the fans. The following sections detail the approach to the scope of work. Attached are two figures showing where the fans will be installed at each building. We assume that the work plan will not require modification; however, we have included hours for additional reporting.

Mitigation Fan Selection Basis – Sub-Slab Depressurization Systems

Based on AES' experience with installing and operating sub-slab depressurization systems (SSD) in Alaska, typical SSD wells will induce as much as a 30 foot radius of influence (ROI) beneath a slab by extracting 15 cubic feet per minute (CFM) at 10 inches of water column (inWC) in fairly tight soils. For the 4th and Gambell SSD systems, we have selected a smaller, less powerful (and hence less costly to run) fan, the RadonAway GP501 radon style fan, for both houses based on the following assumptions:

- Only a 10 foot ROI is required due to the close proximity of the extraction wells.
- Both houses contained dry, sandy gravel, fill material with very little fines beneath the slabs.
- RadonAway GP501 fans are capable of extracting a minimum 10 CFM @ 3 inWC from each SSD well.

Mitigation Fan Selection Basis – Sub-Membrane Depressurization Systems

We selected the more efficient RadonAway RP140 and RP145 fans for the sub-membrane depressurization (SMD) systems to provide a minimum of 2 CFM of flow at 0.5 inWC per linear foot of perforated PVC piping. An information sheet on the RadonAway fans is attached to this proposal.

Installation at 720 East Third Avenue

1. Licensed electrician will install a dedicated electrical circuit in the existing circuit panel that will be shared by the two fan units. *(Assumption: Space is available in the existing panel for one extra circuit*)

2. Electrician will install an electrical junction box adjacent to each of the two fan locations.

3. Install a RadonAway GP501 fan in the exhaust stack on the east wall of the house that services three SSD wells.

4. Install a PVC ball valve, a 1/4" sample port, and a analog manometer on each extraction line that will be used to balance flow and vacuum between the extraction wells.

5. Install a RadonAway RP140 fan in the exhaust stack on the west wall of the house that services the SMD system in the crawl space area under the entryway of the house.

6. To prevent condensation in the exhaust stacks from freezing, stacks will be insulated with 3/4" thick, closed cell foam insulation. The insulation will be wrapped with a weather-proof aluminum covering.

Installation at 736 East Third Avenue – North Duplex

1. Licensed electrician will install a dedicated electrical circuit in the existing circuit panel that will be shared by the two fan units. *(Assumption: Space is available in the existing panel for one extra circuit)*

2. Electrician will install an electrical junction box adjacent to each of the two fan locations.

3. Install a RadonAway GP501 fan in the crawl space on the extraction line on the west side of the duplex that services two SSD wells and the SMD line on the northern side of the crawl space.

4. Install a PVC ball valve on each extraction well line and on the SMD line with a 1/4" sample port and an analog manometer that will be used to balance flow between extraction wells and the SMD line.

5. Install a RadonAway RP145 fan in the crawl space on the SMD extraction line on the east side of the duplex.

Ahtna Engineering Services, LLC
110 W. 38th St. Suite 200A
Anchorage, AK 99503
www.ahtnaes.com
Phone: 907.646.2969; Fax: 907.561.5475

6. To prevent condensation in the exhaust stacks from freezing, stacks will be insulated with 3/4" thick, closed cell foam insulation. The insulation will be wrapped with a weather-proof aluminum covering.

Confirmation Air Sampling

Air samples will be collected from both houses using the same methods as described in the *Vapor Intrusion Mitigation Design Plan* dated May 8, 2014. Samples will be collected no sooner than 72 hours from start-up of the systems to allow thorough indoor air exchange under depressurization conditions.

Reporting

The majority of reporting costs are already included in the original contract. However, additional hours have been added to report the installation of the fans and the additional sample results and analysis.

The total cost to complete this work is $18,963. We thank you for this opportunity to submit this modification. If you should have further questions, please do not hesitate to call the undersigned at (907) 865-3865.

Sincerely,

Ahtna Engineering Services, LLC

Olga M Stuart

Project Manager

Attachments:
1. Detailed Cost Estimate
2. Fan Location Figures
3. RadonAway Fan Information Sheets

SCHEDULE OF PRICING

4th and Gambell Site - Fan Modification

Company Name Ahtna Engineering Services, LLC

ITEM	QTY	UNIT	UNIT PRICE	TOTAL NTE
1. Blower Installation for 720 E 3rd	1	Lump Sum	$6,947	$6,946.70
2. Blower Installation for 736 E 3rd - North Duplex	1	Lump Sum	$8,769	$8,769.30
3. Additional Reporting Hours	1	Lump Sum	$3,247	$3,247.00
TOTAL PRICE				**$18,963.00**

Detailed Labor and Cost Summary - Fan Modification
Vapor Intrusion Mitigation and Indoor Air Sampling
EQ - 4th and Gambell

	Administrative Assistant	Technical Editor	Junior Engineer	Associate Scientist	Construction Technician	Senior Engineer	Technical Officer	Project Manager	Contract Administrator		
	Johns	*Quintans*	*Fox*	*Kirk*	*Rasmussen*	*Oberlee*	*Martich*	*Stewart*	*Sagiao*	**Subtotal**	
Rate Per Hour	$79.00	$122.00	$105.00	$100.00	$66.00	$125.00	$165.00	$100.00	$131.00	Hours	Ahtna Labor Cost
Task											
II Implement Work Plan											
720 E. 3rd	1		3	14	0	14	2	2	1	37	$4,205
736 E. 3rd - North Duplex	1		3	14	0	14	2	2		36	$4,074
III Additional Reporting Hours	2	1	3	10	0	4	2	6		28	$3,025
	4	**1**	**9**	**38**	**0**	**32**	**6**	**10**	**1**	**101**	**$11,304**
									TOTAL LABOR COST	**$11,304**	
									TOTAL ODC (pg 2)	**$7,659**	
									PROJECT TOTAL	***$18,963***	

Other Direct Costs (ODC) Detail - Fan Modification
Vapor Intrusion Mitigation and Indoor Air Sampling
EQ - 4th and Gambell

	OTHER DIRECT COSTS:	No. of Units	Unit	Cost per Unit	Subtotal	
Task II	**Implement Work Plan**					
	720 East 3rd					
	Fan #1 (RadonAway GP501)	1	each	$300	$300	
	Fan #2 (RadonAway RP140)	1	each	$200	$200	
	Weather Proof - Pipe Insulation	60	ft	$14	$840	
	2" PVC Ball Valves	3	each	$50	$150	
	4" PVC Ball Valves	1	each	$130	$130	
	Analog Manometer	3	each	$40	$120	
	PVC Fittings	1	estimate	$300	$300	
	Tools and Equipment	1	LS	$200	$200	
	Air Samples (TO-15 Low Level)-ALS Laboratory (with shipping)	1	each	$230	$230	
					Subtotal	**$2,470**
	North Duplex					
	Fan #1 (RadonAway GP501)	1	each	$300	$300	
	Fan #2 (RadonAway RP145)	1	each	$200	$200	
	Weather Proof - Pipe Insulation	40	ft	$14	$560	
	2" PVC Ball Valves	2	each	$50	$100	
	4" PVC Ball Valves	1	each	$130	$130	
	PVC Fittings	1	estimate	$200	$200	
	Analog Manometer	2	each	$40	$80	
	Tools and Equipment	1	LS	$200	$200	
	Electrical Subcontractor ($1800 - $2200)	1	estimate	$2,000	$2,000	
	Air Samples (TO-15 Low Level)-ALS Laboratory (with shipping)	2	each	$230	$460	
					Subtotal	**$4,230**
Task III	**Additional Reporting Hours**					
	Additional Drafting services	1	estimate	$200	$200	
					Subtotal	**$200**

DIRECT COST SUBTOTAL:		*$6,900*
G&A	*11%*	*$ 759*
DIRECT COST TOTAL:		***$7,659***

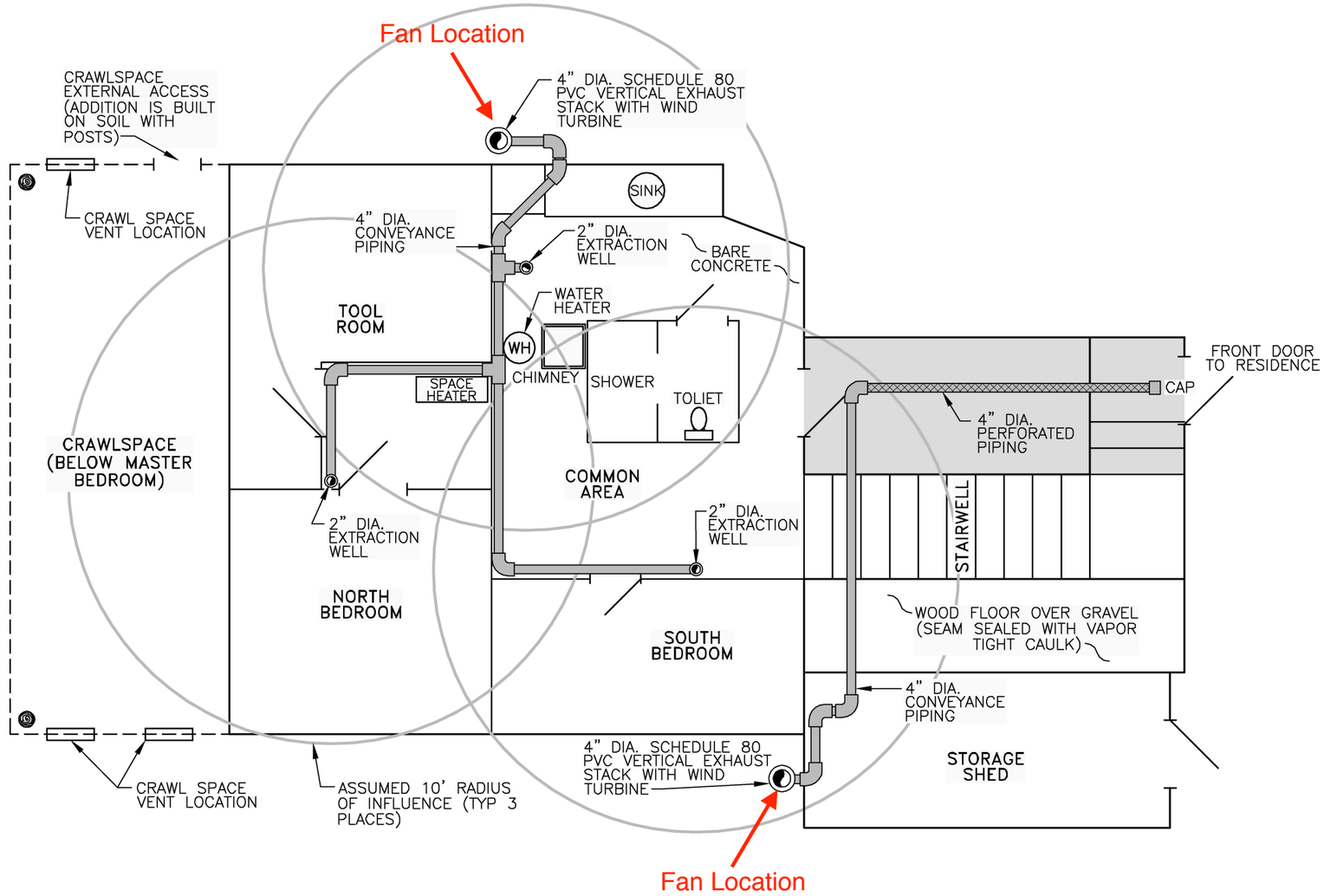

LEGEND

- VAPOR BARRIER ON SOIL
- PERFORATED PVC PIPE
- CONVEYANCE PIPE

NOTE:
VAPOR BARRIER EXTENDS TO TOP OF FOUNDATION WALLS AROUND BUILDING PERIMETER.

0 2.5 5
APPROX. SCALE IN FEET

FIGURE 4

720 E. 3rd AVENUE - AS-BUILT

VAPOR INTRUSION MITIGATION INSTALLATION REPORT
EPA EMERGENCY AND RAPID RESPONSE SERVICES
4TH AND GAMBELL SITE
Anchorage, Alaska

Ahtna Engineering

DATE: JUNE 2014
REV.: –
CHKD: N.P.O.
DRAWN: C.E.H.
PROJ. No.: 15-001

PATH: D:\Project Drawings\2014 Drawings\14 Gambell\14 GAM VIM RPT FILE: 14-GAM-VIM-RPT-F4.DWG PLOTTED: 6/4/14.

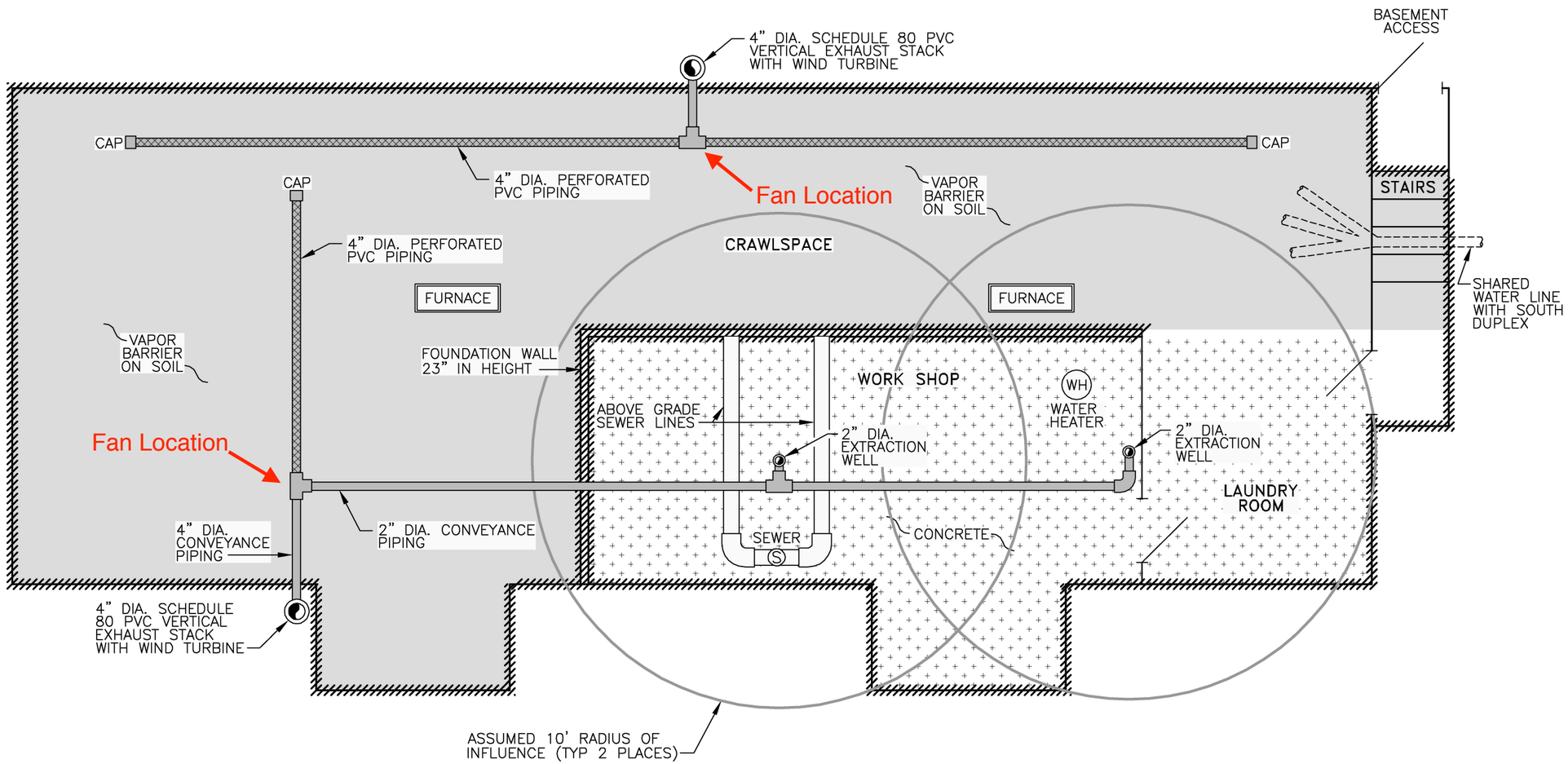

LEGEND

- VAPOR BARRIER ON SOIL
- RETRO-COAT APPLICATION AREA
- FOUNDATION WALLS WHERE RETRO-COAT WILL BE APPLIED
- PERFORATED PVC PIPE
- CONVEYANCE PIPE

0 2.5 5

APPROX. SCALE IN FEET

FIGURE 5

736 E. 3rd AVENUE (NORTH DUPLEX)
AS-BUILT

VAPOR INTRUSION MITIGATION INSTALLATION REPORT
EPA EMERGENCY AND RAPID RESPONSE SERVICES
4TH AND GAMBELL SITE
Anchorage, Alaska

Ahtna Engineering

DATE: JUNE 2014
REV.: –
CHKD: N.P.O.
DRAWN: C.E.H.
PROJ. No.: 15-001

PATH: D:\Project Drawings\2014 Drawings\14 Gambell\14 GAM VIM RPT FILE: 14-GAM-VIM-RPT-F5.DWG PLOTTED: 6/4/14.

RadonAway™
The world's leading radon fan manufacturer

GP Series

Radon Mitigation Fan

All RadonAway™ fans are specifically designed for radon mitigation. GP Series Fans offer a wide range of performance options that make them ideal for most sub-slab radon mitigation systems.

Features

- Quiet operation
- Water-hardened motor
- Seams sealed under negative pressure (to inhibit radon leakage)
- Mounts on duct pipe or with integral flange
- 3″ diameter ducts for use with 3″ or 4″ pipe
- Electrical box for hard wire or plug in
- ETL Listed - for indoor or outdoor use
- 4 interchangeable GP models

MODEL	P/N	FAN DUCT DIAMETER	WATTS	MAX. PRESSURE"WC	TYPICAL CFM vs. STATIC PRESSURE WC						
					1.0"	1.5"	2.0"	2.5"	3.0"	3.5"	4.0"
GP201	23007-1	3"	40-60	2.0	82	58	5	-	-	-	-
GP301	23006-1	3"	55-90	2.6	92	77	45	10	-	-	-
GP401	23009-1	3"	60-110	3.4	93	82	60	40	15	-	-
GP501	23005-1	3"	70-140	4.2	95	87	80	70	57	30	10

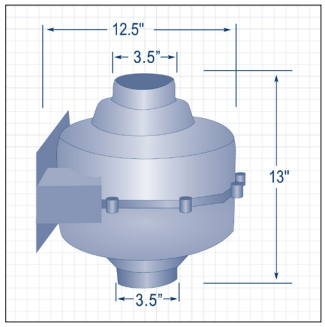

Made in USA with US and imported parts

ETL Listed

All RadonAway inline radon fans are covered by our 5-year, hassle-free warranty

For Further Information Contact

9/12
P/N 02002

RadonAway™
The world's leading radon fan manufacturer

RP Series

Radon Mitigation Fan

All RadonAway™ fans are specifically designed for radon mitigation. RP Series Fans provide superb performance, run ultra-quiet and are attractive. They are ideal for most sub-slab radon mitigation systems.

Features

- Energy efficient
- Ultra-quiet operation
- Meets all electrical code requirements
- Water-hardened motorized impeller
- Seams sealed to inhibit radon leakage (RP140 & RP145 double snap sealed)
- RP140 and RP260 Energy Star® Rated
- ETL Listed - for indoor or outdoor use
- Thermally protected motor
- Rated for commercial and residential use

MODEL	P/N	FAN DUCT DIAMETER	WATTS	MAX. PRESSURE"WC	TYPICAL CFM vs. STATIC PRESSURE WC				
					0"	.5"	1.0"	1.5"	2.0"
RP140*	23029-1	4"	15-21	0.8	135	70	-	-	-
RP145	23030-1	4"	41-72	2.1	166	126	82	41	3
RP260*	23032-1	6"	50-75	1.6	272	176	89	13	-
RP265	23033-1	6"	91-129	2.3	334	247	176	116	52
RP380*	28208	8"	95-152	2.3	497	353	220	130	38

*Energy Star® Rated

Made in USA with US and imported parts

ETL Listed

All RadonAway inline radon fans are covered by our 5-year, hassle-free warranty

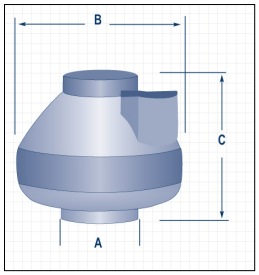

Model	A	B	C
RP140	4.5"	9.7"	8.5"
RP145	4.5"	9.7"	8.5"
RP260	6"	11.75"	8.6"
RP265	6"	11.75"	8.6"
RP380	8"	13.41"	10.53"

For Further Information Contact

9/12
P/N 02008